Kawasaki

Ninja ZX-6R

Motorcycle Service Manual

Quick Reference Guide

This quick reference guide will assist you in locating a desired topic or procedure.

- Bend the pages back to match the black tab of the desired chapter number with the black tab on the edge at each table of contents page.
- Refer to the sectional table of contents for the exact pages to locate the specific topic required.

Kawasaki

Ninja ZX-6R

Motorcycle Service Manual

Second Edition (1) : Jan. 8, 1997 (K)

LIST OF ABBREVIATIONS

A	ampere(s)	lb	pounds(s)
ABDC	after bottom dead center	m	meter(s)
AC	alternating current	min	minute(s)
ATDC	after top dead center	N	newton(s)
BBDC	before bottom dead center	Pa	pascal(s)
BDC	bottom dead center	PS	horsepower
BTDC	before top dead center	psi	pound(s) per square inch
°C	degree(s) Celcius	r	revolution
DC	direct current	rpm	revolution(s) per minute
F	farad(s)	TDC	top dead center
°F	degree(s) Fahrenheit	TIR	total indicator reading
ft	foot, feet	V	volt(s)
g	gram(s)	W	watt(s)
h	hour(s)	Ω	ohm(s)
L	liter(s)		

Read OWNER'S MANUAL before operating.

EMISSION CONTROL INFORMATION

To protect the environment in which we all live, Kawasaki has incorporated crankcase emission (1) and exhaust emission (2) control systems in compliance with applicable regulations of the United States Environmental Protection Agency and California Air Resources Board. Additionally, Kawasaki has incorporated an evaporative emission control system (3) in compliance with applicable regulations of the California Air Resources Board on vehicles sold in California only.

1. Crankcase Emission Control System

   This system eliminates the release of crankcase vapors into the atmosphere. Instead, the vapors are routed through an oil separator to the intake side of the engine. While the engine is operating, the vapors are drawn into combustion chamber, where they are burned along with the fuel and air supplied by the carburetion system.

2. Exhaust Emission Control System

   This system reduces the amount of pollutants discharged into the atmosphere by the exhaust of this motorcycle. The fuel and ignition systems of this motorcycle have been carefully designed and constructed to ensure an efficient engine with low exhaust pollutant levels.

3. Evaporative Emission Control System

   Vapors caused by fuel evaporation in the fuel system are not vented into the atmosphere. Instead, fuel vapors are routed into the running engine to be burned, or stored in a canister when the engine is stopped. Liquid fuel is caught by a vapor separator and returned to the fuel tank.

The Clean Air Act, which is the Federal law covering motor vehicle pollution, contains what is commonly referred to as the Act's "tampering provisions."

"Sec. 203(a) The following acts and the causing thereof are prohibited...

(3)(A) for any person to remove or render inoperative any device or element of design installed on or in a motor vehicle or motor vehicle engine in compliance with regulations under this title prior to its sale and delivery to the ultimate purchaser, or for any manufacturer or dealer knowingly to remove or render inoperative any such device or element of design after such sale and delivery to the ultimate purchaser.

(3)(B) for any person engaged in the business of repairing, servicing, selling, leasing, or trading motor vehicles or motor vehicle engines, or who operates a fleet of motor vehicles knowingly to remove or render inoperative any device or element of design installed on or in a motor vehicle or motor vehicle engine in compliance with regulations under this title following its sale and delivery to the ultimate purchaser..."

(Continued on next page.)

NOTE

- *The phrase "remove or render inoperative any device or element of design" has been generally interpreted as follows:*
  1. *Tampering does not include the temporary or rendering inoperative of devices or elements of design in order to perform maintenance.*
  2. *Tampering could include:*
     a. *Maladjustment of vehicle components such that the emission standards are exceeded.*
     b. *Use of replacement parts or accessories which adversely affect the performance or durability of the motorcycle.*
     c. *Addition of components or accessories that result in the vehicle exceeding the standards.*
     d. *Permanently removing, disconnecting, or rendering inoperative any component or element of design of the emission control systems.*

WE RECOMMEND THAT ALL DEALERS OBSERVE THESE PROVISIONS OF FEDERAL LAW, THE VIOLATION OF WHICH IS PUNISHABLE BY CIVIL PENALTIES NOT EXCEEDING $10,000 PER VIOLATION.

TAMPERING WITH NOISE CONTROL SYSTEM PROHIBITED

Federal law prohibits the following acts or the causing thereof: (1) The removal or rendering inoperative by any person other than for purposes of maintenance, repair, or replacement, of any device or element of design incorporated into any new vehicle for the purpose of noise control prior to its sale or delivery to the ultimate purchaser or while it is in use, or (2) the use of the vehicle after such device or element of design has been removed or rendered inoperative by any person.

Among those acts presumed to constitute tampering are the acts listed below:

- Replacement of the original exhaust system or muffler with a component not in compliance with Federal regulations.
- Removal of the muffler(s) or any internal portion of the muffler(s).
- Removal of the air box or air box cover.
- Modifications to the muffler(s) or air intake system by cutting, drilling, or other means if such modifications result in increased noise levels.

Foreword

This manual is designed primarily for use by trained mechanics in a properly equipped shop. However, it contains enough detail and basic information to make it useful to the owner who desires to perform his own basic maintenance and repair work. A basic knowledge of mechanics, the proper use of tools, and workshop procedures must be understood in order to carry out maintenance and repair satisfactorily. Whenever the owner has insufficient experience or doubts his ability to do the work, all adjustments, maintenance, and repair should be carried out only by qualified mechanics.

In order to perform the work efficiently and to avoid costly mistakes, read the text, thoroughly familiarize yourself with the procedures before starting work, and then do the work carefully in a clean area. Whenever special tools or equipment are specified, do not use makeshift tools or equipment. Precision measurements can only be made if the proper instruments are used, and the use of substitute tools may adversely affect safe operation.

For the duration of the warranty period, we recommend that all repairs and scheduled maintenance be performed in accordance with this service manual. Any owner maintenance or repair procedure not performed in accordance with this manual may void the warranty.

To get the longest life out of your motorcycle:

- Follow the Periodic Maintenance Chart in the Service Manual.
- Be alert for problems and non-scheduled maintenance.
- Use proper tools and genuine Kawasaki Motorcycle parts. Special tools, gauges, and testers that are necessary when servicing Kawasaki motorcycles are introduced by the Special Tool Manual. Genuine parts provided as spare parts are listed in the Parts Catalog.
- Follow the procedures in this manual carefully. Don't take shortcuts.
- Remember to keep complete records of maintenance and repair with dates and any new parts installed.

How to Use This Manual

In preparing this manual, we divided the product into its major systems. These systems became the manual's chapters. All information for a particular system from adjustment through disassembly and inspection is located in a single chapter.

The Quick Reference Guide shows you all of the product's system and assists in locating their chapters. Each chapter in turn has its own comprehensive Table of Contents.

The Periodic Maintenance Chart is located in the General Information chapter. The chart gives a time schedule for required maintenance operations.

If you want spark plug information, for example, go to the Periodic Maintenance Chart first. The chart tells you how frequently to clean and gap the plug. Next, use the Quick Reference Guide to locate the Electrical System chapter. Then, use the Table of Contents on the first page of the chapter to find the Spark Plug section.

Whenever you see these WARNING and CAUTION symbols, heed their instructions! Always follow safe operating and maintenance practices.

⚠WARNING

This warning symbol identifies special instructions or procedures which, if not correctly followed, could result in personal injury, or loss of life.

CAUTION

This caution symbol identifies special instructions or procedures which, if not strictly observed, could result in damage to or destruction of equipment.

This manual contains four more symbols (in addition to WARNING and CAUTION) which will help you distinguish different types of information.

NOTE

○ *This note symbol indicates points of particular interest for more efficient and convenient operation.*

● Indicates a procedural step or work to be done.

○ Indicates a procedural sub-step or how to do the work of the procedural step it follows. It also precedes the text of a NOTE.

★ Indicates a conditional step or what action to take based on the results of the test or inspection in the procedural step or sub-step it follows.

In most chapters an exploded view illustration of the system components follows the Table of Contents. In these illustrations you will find the instructions indicating which parts require specified tightening torque, oil, grease or a locking agent during assembly.

General Information

Table of Contents

Before Servicing

Before starting to service a motorcycle, careful reading of the applicable section is recommended to eliminate unnecessary work. Photographs, diagrams, notes, cautions, warnings, and detailed descriptions have been included wherever necessary. Nevertheless, even a detailed account has limitations, a certain amount of basic knowledge is also required for successful work.

Especially note the following:

(1) Dirt

Before removal and disassembly, clean the motorcycle. Any dirt entering the engine or other parts will work as an abrasive and shorten the life of the motorcycle. For the same reason, before installing a new part, clean off any dust or metal filings.

(2) Battery Ground

Remove the ground (−) lead from the battery before performing any disassembly operations on the motorcycle. This prevents:

(a) the possibility of accidentally turning the engine over while partially disassembled.

(b) sparks at electrical connections which will occur when they are disconnected.

(c) damage to electrical parts.

(3) Tightening Sequence

Generally, when installing a part with several bolts, nuts, or screws, start them all in their holes and tighten them to a snug fit. Then tighten them evenly in a cross pattern. This is to avoid distortion of the part and/or causing gas or oil leakage. Conversely when loosening the bolts, nuts, or screws, first loosen all of them by about a quarter turn and then remove them. Where there is a tightening sequence indication in this Service Manual, the bolts, nuts, or screws must be tightened in the order and method indicated.

(4) Torque

When torque values are given in this Service Manual, use them. Either too little or too much torque may lead to serious damage. Use a good quality, reliable torque wrench.

(5) Force

Common sense should dictate how much force is necessary in assembly and disassembly. If a part seems especially difficult to remove or install, stop and examine what may be causing the problem. Whenever tapping is necessary, tap lightly using a wooden or plastic-faced mallet. Use an impact driver for screws (particularly for the removal of screws held by a locking agent) in order to avoid damaging the screw heads.

(6) Edges

Watch for sharp edges, especially during major engine disassembly and assembly. Protect your hands with gloves or a piece of thick cloth when lifting the engine or turning it over.

(7) High-Flash Point Solvent

A high-flash point solvent is recommended to reduce fire danger. A commercial solvent commonly available in North America is Stoddard solvent (generic name). Always follow manufacturer and container directions regarding the use of any solvent.

(8) Gasket, O-Ring

Do not reuse a gasket or O-ring once it has been in service. The mating surfaces around the gasket should be free of foreign matter and perfectly smooth to avoid oil or compression leaks.

(9) Liquid Gasket, Non-Permanent Locking Agent

Follow manufacturer's directions for cleaning and preparing surfaces where these compounds will be used. Apply sparingly. Excessive amounts may block engine oil passages and cause serious damage. An example of a non-permanent locking agent commonly available in North America is Loctite Lock'n Seal (Blue).

(10) Press

A part installed using a press or driver, such as a wheel bearing, should first be coated with oil on its outer or inner circumference so that it will go into place smoothly.

(11) Ball Bearing and Needle Bearing

Do not remove any ball or needle bearings that are pressed in unless it is necessary. If they are removed, replace them with new ones.

When installing a bearing, press it in with the marked side facing out using a suitable driver until it is bottomed. Bearings should be pressed into place by pushing evenly the bearing race which is affected by friction.

(12) Oil Seal and Grease Seal

Replace any oil or grease seals that were removed with new ones, as removal generally damages seals.

When pressing in a seal which has manufacturer's marks, press it in with the marks facing out. Seals should be pressed into place using a suitable driver, which contacts evenly with the side of seal, until the face of the seal is even with the end of the hole.

(13) Seal Guide

A seal guide is required for certain oil or grease seals during installation to avoid damage to the seal lips. Before a shaft passes through a seal, apply a little high temperature grease on the lips to reduce rubber to metal friction.

(14) Circlip, Retaining Ring

Replace any circlips and retaining rings that were removed with new ones, as removal weakens and deforms them. When installing circlips and retaining rings, take care to compress or expand them only enough to install them and no more.

(15) Cotter Pin

Replace any cotter pins that were removed with new ones, as removal deforms and breaks them.

(16) Lubrication

Engine wear is generally at its maximum while the engine is warming up and before all the rubbing surfaces have an adequate lubricative film. During assembly, oil or grease (whichever is more suitable) should be applied to any rubbing surface which has lost its lubricative film. Old grease and dirty oil should be cleaned off. Deteriorated grease has lost its lubricative quality and may contain abrasive foreign particles.

Don't use just any oil or grease. Some oils and greases in particular should be used only in certain applications and may be harmful if used in an application for which they are not intended. This manual makes reference to molybdenum disulfide grease (MoS_2) in the assembly of certain engine and chassis parts. Always check manufacturer recommendations before using such special lubricants.

(17) Electrical Wires

All the electrical wires are either single-color or two-color and, with only a few exceptions, must be connected to wires of the same color. On any of the two-color wires there is a greater amount of one color and a lesser amount of a second color, so a two-color wire is identified by first the primary color and then the secondary color. For example, a yellow wire with thin red stripes is referred to as a "yellow/red" wire; it would be a "red/yellow" wire if the colors were reversed to make red the main color.

Wire (cross-section)	Name of Wire Color
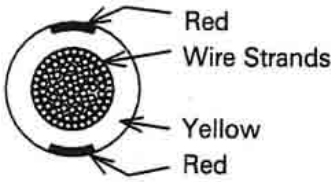	Yellow/Red

(18) Replacement Parts

When there is a replacement instruction, replace these parts with new ones every time they are removed. These replacement parts will be damaged or lose their original function once removed.

(19) Inspection

When parts have been disassembled, visually inspect these parts for the following conditions or other damage. If there is any doubt as to the condition of them, replace them with new ones.

Abrasion	Crack	Hardening	Warp
Bent	Dent	Scratch	Wear
Color change	Deterioration	Seizure	

(20) Specifications

Specification terms are defined as follows:

"Standards" show dimensions or performances which brand-new parts or systems have.

"Service Limits" indicate the usable limits. If the measurement shows excessive wear or deteriorated performance, replace the damaged parts.

ZX600-F1 (US and Canada Models) Left Side View:

ZX600-F1 (US and Canada Models) Right Side View:

ZX600-F1 (Europe Model) Left Side View:

ZX600-F1 (Europe Model) Right Side View:

General Specifications

Items		ZX600-F1
Dimensions:		
Overall length		2 030 mm, (FG)(GR)(NR)(SD)(ST) 2 115 mm
Overall width		690 mm
Overall height		1 130 mm
Wheelbase		1 415 mm
Road clearance		120 mm
Seat height		810 mm
Dry mass		182 kg, (CA) 182.5 kg
Curb mass:	Front	105 kg
	Rear	101 kg, (CA) 101.5 kg
Fuel tank capacity		18 L
Performance:		
Minimum turning radius		3.2 m
Engine:		
Type		4-stroke, DOHC, 4-cylinder
Cooling system		Liquid-cooled
Bore and stroke		66.0 x 43.8 mm
Displacement		599 mL
Compression ratio		11.8
Maximum horsepower		77 kW (105 PS) @12 500 r/min (rpm), (AR)(FG) 74 kW (100 PS) @12 500 r/min (rpm), (AS) 76 kW (103 PS) @12 500 r/min(rpm), (FR) 75.1 kW (102 PS) @12 500 r/min (rpm) (UTAC's norm), (SD) 44 kW (60 PS) @10 500 r/min (rpm), (ST) 30 kW (41 PS) @6 000 r/min (rpm), (US) ---
Maximum torque		65 N-m(6.6 kg-m, 47.7 ft-lb) @10 000 r/min(rpm), (AR)(AS)(FG) 64 N-m (6.5 kg-m, 47.0 ft-lb) @10 000 r/min (rpm), (ST)(SD) 49 N-m (5.0 kg-m, 36.2 ft-lb) @5 500 r/min (rpm), (FR)(UK)(US) ---
Carburetion system		Carburetors, Keihin CVKD 36 × 4
Starting system		Electric starter
Ignition system		Battery and coil (transistorized)
Timing advance		Electronically advanced(digital igniter)
Ignition timing		From 12.5° BTDC @1 050 r/min (rpm) to 35° BTDC @5 000 r/min (rpm) (AR)(CA)(KR) From 5° BTDC @1 300 r/min (rpm) to 35° BTDC @5 000 r/min (rpm), (ST) From 2.5° BTDC @1 300 r/min (rpm) to 35° BTDC @5 000 r/min (rpm)
Spark plug		NGK CR9E or ND U27ESR-N
Cylinder numbering method		Left to right, 1-2-3-4
Firing order		1-2-4-3
Valve timing:		
Inlet	Open	58° BTDC
	Close	78° ABDC
	Duration	316°
Exhaust	Open	66° BBDC
	Close	46° ATDC
	Duration	292°

Items		ZX600-F1
Lubrication system		Forced lubrication (wet sump with cooler)
Engine oil:		
Grade		SE, SF or SG class
Viscosity		SAE10W-40, 10W-50, 20W-40, or 20W-50
Capacity		4.0 L
Drive Train:		
Primary reduction system:		
Type		Gear
Reduction ratio		2.022 (89/44)
Clutch type		Wet multi disc
Transmission:		
Type		6-speed, constant mesh, return shift
Gear ratios:	1st	2.923 (38/13)
	2nd	2.062 (33/16)
	3rd	1.631 (31/19)
	4th	1.380 (29/21)
	5th	1.217 (28/23)
	6th	1.083 (26/24)
Final drive system:		
Type		Chain drive
Reduction ratio		2.666 (40/15)
Overall drive ratio		5.843 @Top gear
Frame:		
Type		Tubular, diamond
Caster (rake angle)		24°
Trail		87 mm
Front tire:	Type	Tubeless
	Size	120/60 ZR17
Rear tire:	Type	Tubeless
	Size	160/60 ZR17
Front suspension:	Type	Telescopic fork
	Wheel travel	120 mm
Rear suspension:	Type	Swingarm (uni-trak)
	Wheel travel	137 mm
Brake type:	Front	Dual disc
	Rear	Single disc
Electrical Equipment:		
Battery		12 V 10 Ah
Headlight:	Type	Semi-sealed beam
	Bulb	12V60/55W (quartz-halogen),
Tail/brake light		12 V 5/21 W × 2, (CN)(US) 12 V 8/27 W×2
Alternator:	Type	Three-phase AC
	Rated output	24 A/ 14 V @8 000 r/min (rpm)

Specifications are subject to change without notice, and may not apply to every country.

(AR) : Austrian Model
(AS) : Australian Model
(CA) : California Model
(CN) : Canadian Model
(FG) : German Model
(FR) : French Model
(GR): Greek Model
(KR): Korean Model
(NR): Norwegian Model
(SD): Swedish Model
(ST) : Swiss Model
(US): U.S. Model

Periodic Maintenance Chart

The scheduled maintenance must be done in accordance with this chart to keep the motorcycle in good running condition. **The initial maintenance is vitally important and must not be neglected.**

OPERATION \ FREQUENCY	Every (Whichever comes first)	†ODOMETER READING 800km	5000km	10000km	15000km	20000km	25000km	30000km	
Spark plug – clean			●	●	●	●	●	●	
Spark plug – check*			●	●	●	●	●	●	
Valve clearance – check*		●		●		●		●	
Air suction valve – check*			●	●	●	●	●	●	
Air cleaner element –clean		●		●				●	
Air cleaner element – replace	5 cleanings					●			
Throttle grip play--check*		●		●		●		●	
Idle speed – check*		●	●	●	●	●	●	●	
Engine vacuum synchronization -check *		●	●	●	●	●	●	●	
Fuel system--check *				●		●		●	
Coolant – change	2 years							●	
Evaporative emission control system (Cal) – check*		●	●	●	●	●	●	●	
Engine oil – change	year	●	●	●	●	●	●	●	
Oil filter –replace		●		●		●		●	
Radiator hoses, connections – check*	year	●		●		●		●	
Fuel filter – replace						●			
Fuel hose – replace	4 years								
Clutch – adjust		●	●	●	●	●	●	●	
Drive chain wear –check *			●	●	●	●	●	●	
Drive chain –lubricate	300 km								
Drive chain slack – check *	800 km								
Brake pad wear –check*			●	●	●	●	●	●	
Brake fluid level – check*	month	●	●	●	●	●	●	●	
Brake fluid – change	2 years					●			
Brake hose – replace	4 years								
Brake master cylinder cup and dust seal – replace	2 years								
Caliper piston seal and dust seal – replace	2 years								
Brake light switch – check*		●	●	●	●	●	●	●	
Steering – check*		●	●	●	●	●	●	●	
Steering stem bearing – lubricate	2 years					●			
Front fork oil – change								●	
Tire wear – check*			●	●	●	●	●	●	
Swingarm pivot, uni-trak linkage – lubricate				●		●		●	
General lubrication – perform			●	●	●	●	●	●	
Nuts, bolts, and fasteners tightness – check*		●		●		●		●	see below

† : For higher odometer readings, repeat at the frequency interval established here.
* : Replace, add, adjust, clean, or torque if necessary.
(Cal) : California Model only
Nuts, bolts, and fasteners tightness – check: check include muffler and exhaust pipe connection bolts

Technical Information – Maintenance Free Battery

A maintenance free battery is installed in this model. The maintenance free battery is a sealed type, and so cannot be performed the electrolyte level check and topping-up.

(I) Construction

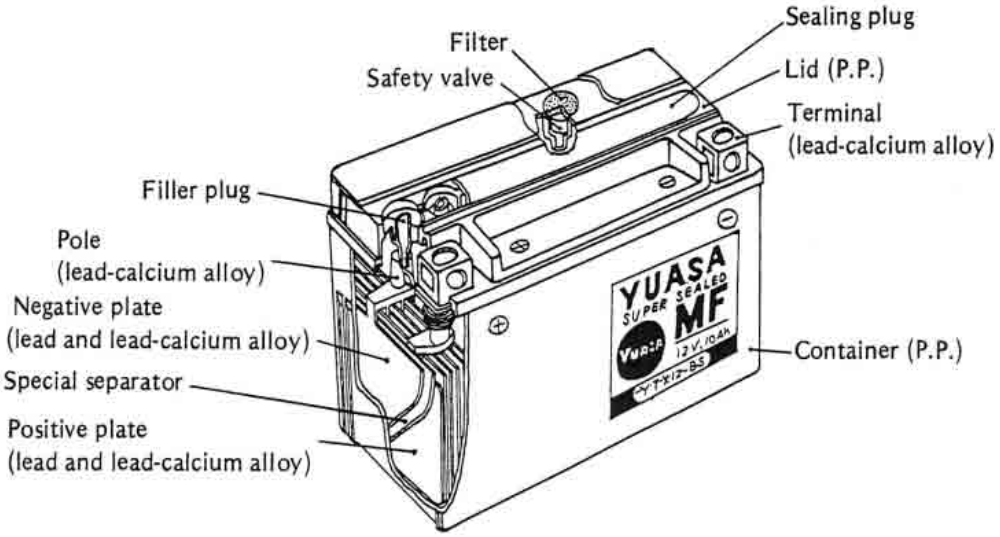

(II) Main Features

1) Maintenance free..... It is not necessary to check the electrolyte level and top-up the electrolyte.
2) No electrolyte leakage..... As the electrolyte is retained firmly in the special separators, there is no free electrolyte in the battery.
3) Instant activation system..... It can be used instantly after filling only the electrolyte without initial charge.
4) One-push motion electrolyte filling..... It is possible to fill the electrolyte by easy one-push motion.
5) Safety construction ..... If the battery internal pressure rises abnormally high, the safety valve opens to release the gas inside the battery to restore the normal pressure and prevent the battery from rupturing. After restoring the normal pressure, the safety valve closes and the battery is sealed again. Moreover, a ceramic filter is disposed on top of the safety valve under the lid to remove risk of ignition or explosion caused by fire from outside.
6) Compact and high performance..... No presence of free electrolyte allows the battery made lower in height, thus resulting in enhanced volume efficiency. Moreover, gas being absorbed inside the battery eliminates the need for a gas exhaust tube.
7) Strong charge/discharge characteristics .... It can amply withstand deep charge/discharge cycles.

(III) Principle of Sealing Structure

A lead-acid battery operates under the following chemical reaction:

$$\underset{\substack{\text{(Lead peroxide)}\\ \text{Positive active material}}}{\overset{(+)}{PbO_2}} + \underset{\substack{\text{(Sulfuric acid)}\\ \text{Electrolyte}}}{2H_2SO_4} + \underset{\substack{\text{(Spongy lead)}\\ \text{Negative active material}}}{\overset{(-)}{Pb}} \underset{\text{Charge}}{\overset{\text{Discharge}}{\rightleftarrows}} \underset{\substack{\text{(Lead sulfate)}\\ \text{Positive active material}}}{\overset{(+)}{PbSO_4}} + \underset{\substack{\text{(water)}\\ \text{Electrolyte}}}{2H_2O} + \underset{\substack{\text{(Lead sulfate)}\\ \text{Negative active material}}}{\overset{(-)}{PbSO_4}}$$

Normally in an ordinary lead-acid battery when it comes to an end of a charge, where the lead sulfate being a discharge product returns to lead peroxide and spongy lead, the charge current flowing thereafter is used exclusively to decompose electrolytically water from the electrolyte, thus resulting in generation of hydrogen gas from the negative plate and oxygen gas from the positive plate. The gases so generated are released out of the battery, causing the amount of electrolyte decreased to require occasional water replenishment.

A maintenance free battery, however, is so designed that, when it is overcharged, even if the positive plate is fully charged, the negative plate remains not fully turned to spongy lead. Therefore, even when the positive plate is overcharged generating oxygen gas, the negative plate is no fully charged, hence generating no hydrogen gas.

Moreover, the oxygen gas generated from the positive plate immediately reacts with the charged active material on the negative plate, and returns to water, with the ultimate result of no water loss.

Pb Negative active material (charged state)	+	1/2 O_2 Oxygen generated from positive plate	→	(PbO) Negative active material

(PbO)	+	H_2SO_4 Electrolyte	→	$PbSO_4$ Negative active material (charged state)	+	H_2O Water

Thus, the negative plate is made as not to get fully charged. Even if the overcharge continues, the oxygen gas generated inside the battery is absorbed by the negative plate, a process called oxygen cycle, which keeps water loss theoretically at nil, and allows the battery to be sealed.

(IV) Filling the Battery with Electrolyte

CAUTION

Do not remove the aluminum seal sheet sealing the filler ports until just before use.
Be sure to use the dedicated electrolyte container for correct electrolyte volume.

- Check to see that there is no peeling, tears or holes in the sealing sheet.
- Place the battery on a level surface.
- Remove the sealing sheet [A].
- ○ When removing, check to hear an air-sucking sound "Shoosh!" from filler ports [B].

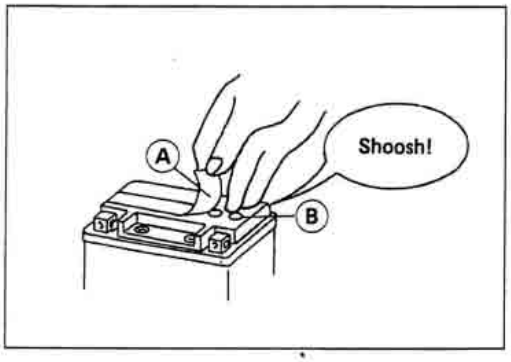

NOTE

○ *A battery whose sealing sheet has any peeling, tears, holes, or from which the air-sucking sound was not heard requires a refreshing charge (initial charge).*

- Take the electrolyte container out of the vinyl bag.
- Detach the strip of caps [A] from the container.

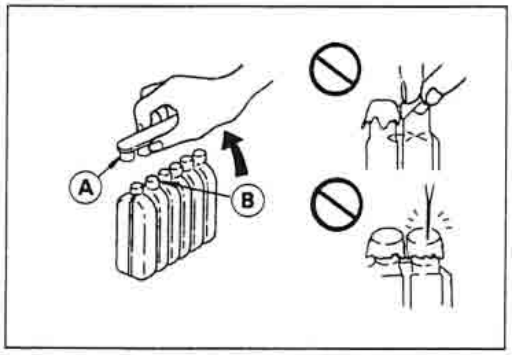

NOTE

○ *Do not discard the strip of caps because it is used as the battery plugs later.*
○ *Do not peel back or pierce the sealed areas [B].*

- Place the electrolyte container upside down with the six sealed areas in line with the six battery filler ports.
- Push the container down strongly enough to break the seals. Now the electrolyte should start to flow into the battery.

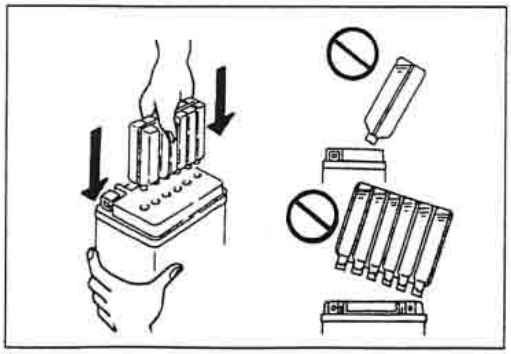

NOTE

○ *Do not tilt the container as the electrolyte flow may be interrupted.*

- Make sure air bubbles [A] are coming up from all six filler ports.
- ○ Leave the container this way for 5 minutes or longer.

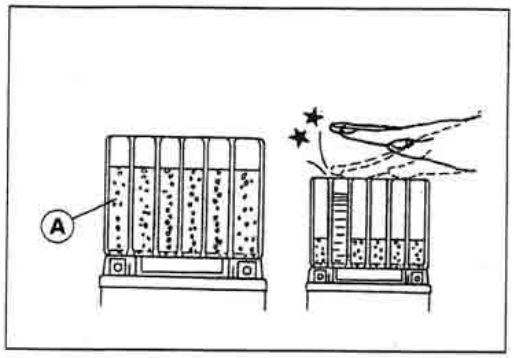

NOTE

○ *If no air bubbles are coming up from a filler port, tap the bottom of the bottle two or three times. Never remove the container from the battery.*

CAUTION
Fill until the container is completely emptied.

- Be certain that all the electrolyte has flowed out.
- Tap the bottom the same way as above if there is any electrolyte left in the container.
- Now pull the container gently out of the battery.
- Let the battery sit for **20** minutes. During this time, the electrolyte permeates the special separators and the gas generated by chemical reaction is released.
- Fit the strip of caps [A] tightly into the filler ports until the strip is at the same level as the top of the battery.

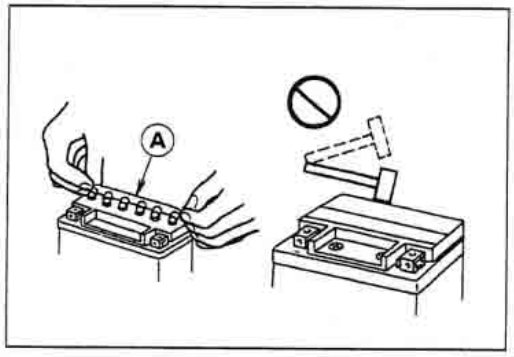

NOTE

○ *Do not hammer. Press down evenly with both hands.*

CAUTION
Once you installed the strip of caps after filling the battery, never remove it, nor add any water or electrolyte.

(V) Initial Charge

While a maintenance free battery can be used after only filling with electrolyte, a battery may not be able to sufficiently move a starter motor to start an engine in the cases shown in the table below, where an initial charge is required before use. However, if a battery shows a terminal voltage of higher than 12.5 V after 10 minutes of filling (Note 1), no initial charge is necessary.

Condition requiring initial charge	Charging method
At low temperatures (lower than 0°C)	1.2 A × 2 ~ 3 hours
Battery has been stored in high temperature and humidity.	1.2 A × 15 ~ 20 hours
Seal has been removed, or broken – peeling, tear or hole. (If you did not hear the air-sucking sound "Shoosh!" as you removed the seal.)	
Battery as old as 2 years or more after manufacture. Battery manufacturing date is printed on battery top. Example) 12 (Day) 10 (Month) 93 (Year) T1 (Mfg. location)	

Note 1 : Terminal voltage – To measure battery terminal voltage, use a digital voltmeter.

(VI) Precautions

1) No need of topping-up
   No topping-up is necessary in this battery until it ends its life under normal use. Forcibly prying off the sealing plug to add water is very dangerous. Never do that.
2) Refreshing charge
   If an engine will not start, a horn sounds weak, or lamps are dim, it indicates the battery has been discharged. Give refresh charge for 5 to 10 hours with charge current shown in the specification (see the Electrical System chapter).
   When a fast charge is inevitably required, do it following precisely the maximum charge current and time conditions indicated on the battery.

CAUTION
This battery is designed to sustain no unusual deterioration if refresh-charged according to the method specified above. However, the battery's performance may be reduced noticeably if charged under conditions other than given above. Never remove the sealing plug during refresh charge. If by chance an excessive amount of gas is generated due to overcharging, the safety valve operates to keep the battery safe.

3) When you do not use the motorcycle for months
   Give a refresh charge before you store the motorcycle and store it with the negative lead removed. Give a refresh charge every six months during storage.
4) Battery life
   If the battery will not start the engine even after several refresh charges, the battery has exceeded its useful life. Replace it. (Provided, however, the vehicle's starting system has no problem.)

⚠WARNING
Keep the battery away from sparks and open flames during charging, since the battery gives off an explosive gas mixture of hydrogen and oxygen. When using a battery charger, connect the battery to the charger before turning on the charger. This procedure prevents sparks at the battery terminals which could ignite any battery gases. No fire should be drawn near the battery, or no terminals should have the tightening loosened. The electrolyte contains sulfuric acid. Be careful not to have it touch your skin or eyes. If touched, wash it off with liberal amount of water. Get medical attention if severe.

(VII) Interchangeability with Ordinary Battery

A maintenance free battery can fully display its performance only when combined with a proper vehicle electric system. Therefore, replace a maintenance free battery only on a motorcycle which was originally equipped with a maintenance free battery.

Be careful, if a maintenance free battery is installed on a motorcycle which had an ordinary battery as original equipment, the maintenance free battery's life will be shortened.

Torque and Locking Agent

The following tables list the tightening torque for the major fasteners requiring use of a non-permanent locking agent or liquid gasket.

Letters used in the "Remarks" column mean:

- **L** : Apply a non-permanent locking agent to the threads.
- **LG** : Apply liquid gasket to the threads.
- **Lh** : Left-hand threads.
- **M** : Apply molybdenum disulfide grease.
- **O** : Apply an oil to the threads and seating surface.
- **S** : Tighten the fasteners following the specified sequence.
- **SS** : Apply silicone sealant.
- **St** : Stake the fasteners to prevent loosening.
- **R** : Replacement parts

The table below, relating tightening torque to thread diameter, lists the basic torque for the bolts and nuts. Use this table for only the bolts and nuts which do not require a specific torque value. All of the values are for use with dry solvent-cleaned threads.

Basic Torque for General Fasteners

Threads dia. (mm)	Torque N-m	Torque kg-m	Torque ft-lb
5	3.4 ~ 4.9	0.35 ~ 0.50	30 ~ 43 in-lb
6	5.9 ~ 7.8	0.60 ~ 0.80	52 ~ 69 in-lb
8	14 ~ 19	1.4 ~ 1.9	10.0 ~ 13.5
10	25 ~ 34	2.6 ~ 3.5	19.0 ~ 25
12	44 ~ 61	4.5 ~ 6.2	33 ~ 45
14	73 ~ 98	7.4 ~ 10.0	54 ~ 72
16	115 ~ 155	11.5 ~ 16.0	83 ~ 115
18	165 ~ 225	17.0 ~ 23.0	125 ~ 165
20	225 ~ 325	23 ~ 33	165 ~ 240

Fastener	Torque N-m	Torque kg-m	Torque ft-lb	Remarks
Fuel System:				
Vacuum Valve Drain Screw	1.0	0.10	9 in-lb	
Cooling System:				
Water Hose Clamp Screws	2.0	0.20	17 in-lb	
Coolant By-pass Fitting	12	1.2	104 in-lb	L
Coolant Drain Plug (Water Pump)	12	1.2	104 in-lb	
Coolant Drain Plug (Cylinder)	12	1.2	104 in-lb	
Radiator Fan Switch	18	1.8	13.0	
Water Temperature Sensor	7.8	0.80	69 in-lb	SS
Impeller Bolt	9.8	1.0	87 in-lb	
Water Pump Cover Bolts	12	1.2	104 in-lb	
Water Hose Fitting Bolts (Cylinder)	12	1.2	104 in-lb	
Thermostat Housing Cover Bolts	6.9	0.70	61 in-lb	
Coolant Plug	12	1.2	104 in-lb	
Engine Top End:				
Spark Plugs	13	1.3	113 in-lb	
Air Suction Valve Cover Bolts	13	1.3	113 in-lb	
Cylinder Head Cover Bolts	9.8	1.0	87 in-lb	
Pickup Coil Cover Bolts	12	1.2	104 in-lb	L (1)
Camshaft Chain Tensioner Mounting Bolts	12	1.2	104 in-lb	L
Camshaft Cap Bolts	12	1.2	104 in-lb	
Water Hose Fitting Bolts (Cylinder)	12	1.2	104 in-lb	
Oil Hose Banjo Bolt	25	2.5	18.0	
Cylinder Head Bolts: M10	49	5.0	36	S, O (Washer)
M6	12	1.2	104 in-lb	S
Cylinder Head Jacket Plugs	22	2.2	16.0	L
Cylinder Head Drain Plug (Front)	20	2.0	14.5	L
Cylinder Head Drain Plug (Rear)	15	1.5	11.0	L
Camshaft Chain Guide Bolt	25	2.5	18.0	
Engine Side Cover Bolts	12	1.2	104 in-lb	
Carburetor Holder Bolts	12	1.2	104 in-lb	
Baffle Plate Bolts	12	1.2	104 in-lb	
Muffler and Exhaust Pipe Connection Bolts	34	3.5	25	
Exhaust Pipe Clamp Bolt	34	3.5	25	

Fastener	Torque			Remarks
	N-m	kg-m	ft-lb	
Clutch				
Clutch Cover Bolts	12	1.2	104 in-lb	L(2, Front)
Clutch Cover Damper Bolts	5.9	0.60	52 in-lb	L
Clutch Spring Bolts	8.8	0.90	78 in-lb	
Clutch Hub Nut	130	13.5	98	R
Engine Lubrication System:				
Oil Filler Plug	1.5 or Hand-Tight	0.15 or Hand-Tight	13 in-lb or Hand-Tight	
Engine Drain Plug	20	2.0	14.5	
Oil Filter(Cartridge type)	9.8	1.0	87 in-lb	R, O
Oil Filter Mounting Bolt	25	2.5	18.0	L(Tap End)
Oil Pan Bolts	12	1.2	104 in-lb	
Oil Pipe Holder Bolts	12	1.2	104 in-lb	
Oil Pressure Relief Valve	15	1.5	11.0	L
Oil Pressure Switch	15	1.5	11.0	SS
Oil Pump Cover Bolts	12	1.2	104 in-lb	
Impeller Bolt	9.8	1.0	87 in-lb	
Oil Pump Drive Gear Bolt	12	1.2	104 in-lb	
Oil Hose Banjo Bolts	25	2.5	18.0	
Oil Passage Plug (Right)	15	1.5	11.0	SS
Oil Cooler Screen Screws	5.4	0.55	48 in-lb	
Engine Removal/Installation:				
Engine Mounting Bolts and Nuts	44	4.5	33	
Engine Mounting Bracket Bolts	23	2.3	16.5	
Engine Mounting Clamp Bolts	23	2.3	16.5	
Crankshaft/Transmission:				
Bleather Plate Bolts	9.8	1.0	87 in-lb	L
Bleather Tube Bracket Bolts	12	1.2	104 in-lb	
Oil Pipe Holder Bolts	12	1.2	104 in-lb	
Crankcase Bolts Φ 8	31	3.2	23	
Φ 7	20	2.0	14.5	
Φ 6	12	1.2	104 in-lb	
Oil Passage Plug (Left)	20	2.0	14.5	L
Oil Passage Plug (Right)	15	1.5	11.0	
Connecting Rod Big End Nuts	in the text	←	←	←
Engine Ground Lead Terminal Bolt	9.8	1.0	87 in-lb	
Timing Rotor Bolt	25	2.5	18.0	
Oil Pressure Switch	15	1.5	11.0	SS
Starter Clutch Bolts	33	3.4	25	L
Engine Sprocket Nut	125	13.0	94	
Gear Positioning Lever Bolt	9.8	1.0	87 in-lb	L
Shift Shaft Return Spring Pin (Bolt)	29	3.0	22	L
Neutral Switch	15	1.5	11.0	
Shift Drum Bearing Holder Bolt	12	1.2	104 in-lb	L
Shift Drum Bearing Holder Screw	12	1.2	104 in-lb	L
Shift Drum Cam Holder Bolt	12	1.2	104 in-lb	L
Pickup Coil Cover Bolts	12	1.2	104 in-lb	L (1)
Wheels/Tires:				
Front Axle Clamp Bolts	20	2.0	14.5	
Front Axle Nut	110	11.0	80	
Rear Axle Nut	110	11.0	80	

Fastener	Torque			Remarks
	N-m	kg-m	ft-lb	
Final Drive:				
Engine Sprocket Nut	125	13.0	94	
Rear Sprocket Nuts	74	7.5	54	
Rear Sprocket Studs	–	–	–	L
Rear Axle Nut	110	11.0	80	
Brakes:				
Bleed Valves	7.8	0.80	69 in-lb	
Brake Hose Banjo Bolts	25	2.5	18.0	
Brake Lever Pivot Bolt	1.0	0.10	9 in-lb	
Brake Lever Pivot Bolt Locknut	5.9	0.60	52 in-lb	
Front Brake Reservoir Cap Screws	1.5	0.15	13 in-lb	
Front Brake Light Switch Screws	1.0	0.10	9 in-lb	
Front Master Cylinder Clamp Bolts	11	1.1	95 in-lb	S
Pad Spring Screws (Front Caliper)	2.9	0.30	26 in-lb	
Caliper Mounting Bolts (Front)	34	3.5	25	
Caliper Assembly Bolts (Front)	21	2.1	15.0	
Front Brake Disc Mounting Bolts	23	2.3	16.5	
Rear Brake Disc Mounting Bolts	23	2.3	16.5	
Caliper Mounting Bolts (Rear)	25	2.5	18.0	
Rear Master Cylinder Mounting Bolts	23	2.3	16.5	
Rear Master Cylinder Push Rod Locknut	18	1.8	13.0	
Suspension:				
Front Fork Clamp Bolts (Upper)	20	2.0	14.5	
Front Fork Clamp Bolts (Lower)	20	2.0	14.5	
Front Fork Top Plugs	23	2.3	16.5	
Piston Rod Nut	15	1.5	11.0	
Front Fork Bottom Allen Bolts	39	4.0	29	L
Front Axle Clamp Bolts	20	2.0	14.5	
Rear Shock Absorber Nuts	59	6.0	43	
Rear Shock Absorber Upper Brackets Nut	59	6.0	43	
Swingarm Pivot Nut	110	11.0	80	
Uni-Trak				
Rocker Arm Nut	59	6.0	43	
Tie-Rod Nuts	59	6.0	43	
Steering:				
Steering Stem Head Nut	49	5.0	36	
Steering Stem Nut	4.9	0.50	43 in-lb	
Handlebar Bolts	34	3.5	25	L
Handlebar Holder Bolts	23	2.3	16.5	
Handlebar Holder Position Bolts	9.8	1.0	87 in-lb	L
Handlebar Weight Screws	–	–	–	L
Handlebar Switch Housing Screws	3.4	0.35	30 in-lb	
Front Fork Clamp Bolts (Upper)	20	2.0	14.5	
Front Fork Clamp Bolts (Lower)	20	2.0	14.5	
Frame:				
Footpeg Holder Bolts	34	3.5	25	L
Side Stand Bracket Bolts	49	5.0	36	
Electrical System:				
Spark Plugs	13	1.3	113 in-lb	
Alternator Rotor Bolt	110	11.0	80	
Stator Coil Bolts	12	1.2	104 in-lb	
Alternator Lead Holding Plate Bolts	8.3	0.85	74 in-lb	

Fastener	Torque			Remarks
	N-m	kg-m	ft-lb	
Engine Ground Lead Terminal Bolt	9.8	1.0	87 in-lb	
Alternator Cover Bolts	12	1.2	104 in-lb	
Pickup Coil Cover Bolts	12	1.2	104 in-lb	L (1)
Pickup Coil Bolts	5.9	0.60	52 in-lb	
Timing Rotor Bolt	25	2.5	18.0	
Starter Motor Mounting Bolts	9.8	1.0	87 in-lb	
Starter Clutch Bolts	33	3.4	104 in-lb	L
Handlebar Switch Housing Screws	3.4	0.35	30 in-lb	
Radiator Fan Switch	18	1.8	13.0	
Water Temperature Sensor	7.8	0.80	69 in-lb	SS
Oil Pressure Switch	15	1.5	11.0	SS
Neutral Switch	15	1.5	11.0	
Starter Lockout Switch Screws	1.0	0.10	9 in-lb	

Special Tools and Sealant

Steering Stem Bearing Driver: 57001-137

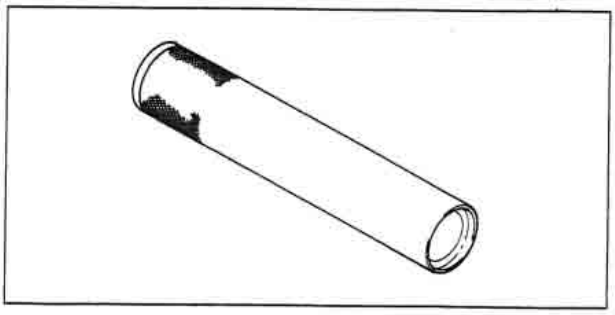

Inside Circlip Pliers: 57001-143

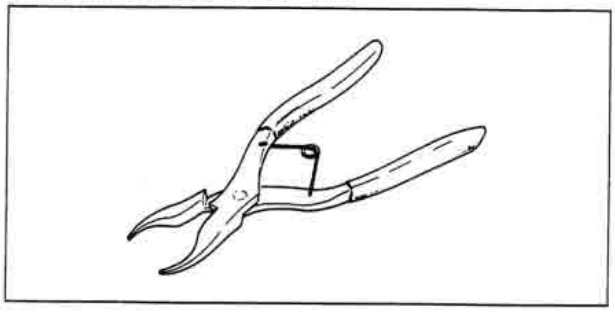

Outside Circlip Pliers: 57001-144

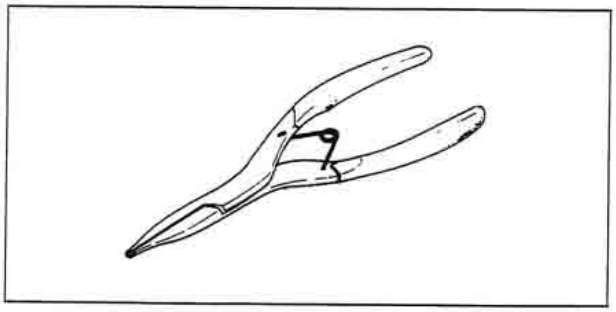

Circlip Pliers: 57001-154

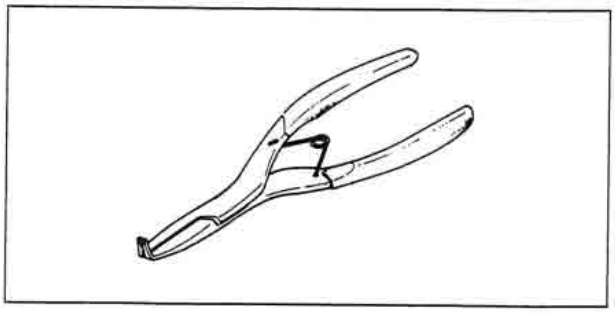

Oil Pressure Gauge, 10 kg/cm²: 57001-164

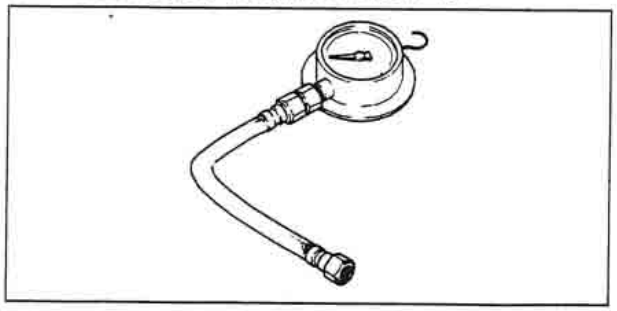

Compression Gauge: 57001-221

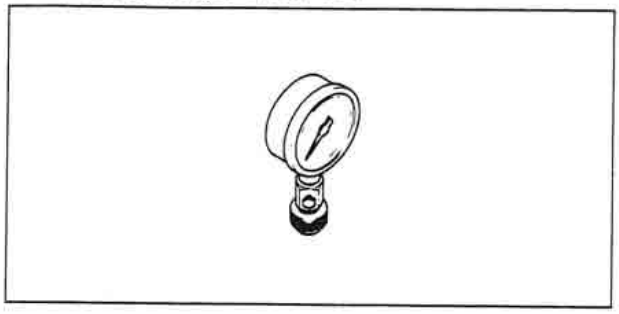

Valve Spring Compressor Assembly: 57001-241

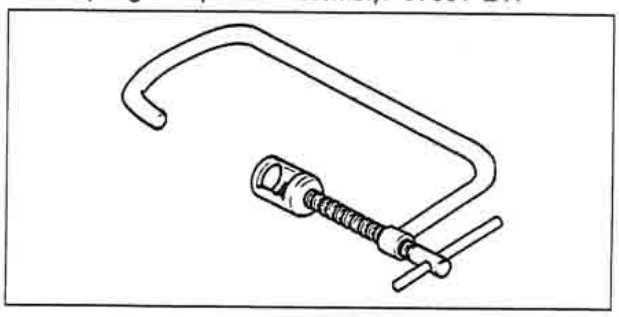

Piston Pin Puller Assembly: 57001-910

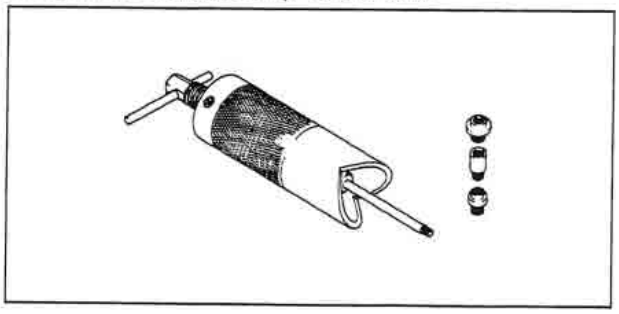

Hand Tester: 57001-983

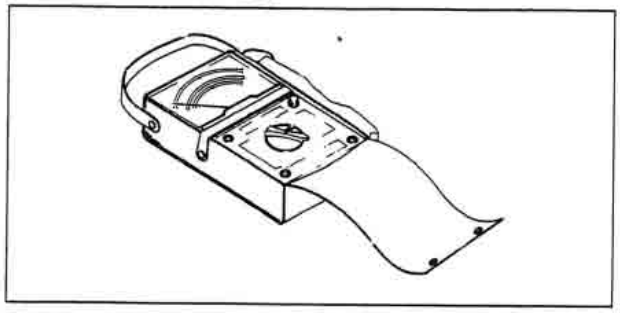

Fuel Level Gauge: 57001-1017

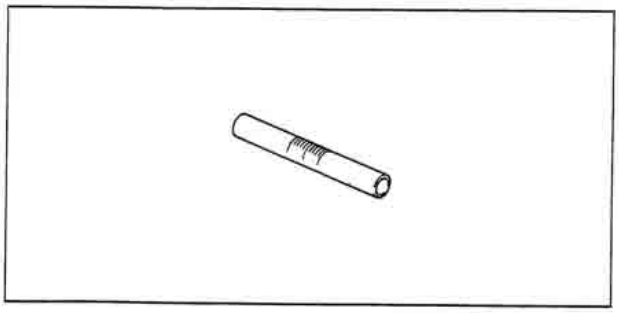

Oil Seal & Bearing Remover: 57001-1058

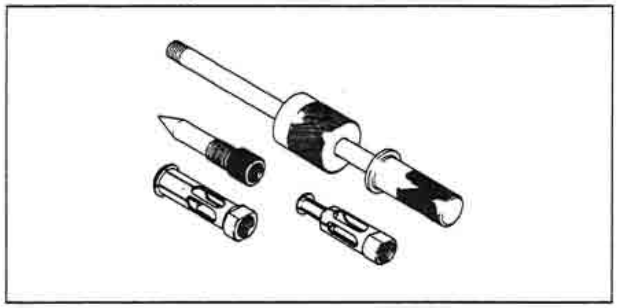

Steering Stem Bearing Driver Adapter: 57001-1074

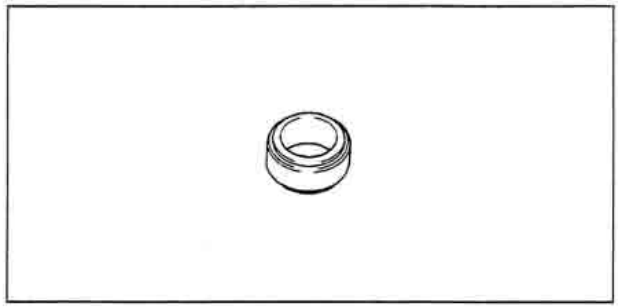

Head Pipe Outer Race Press Shaft: 57001-1075

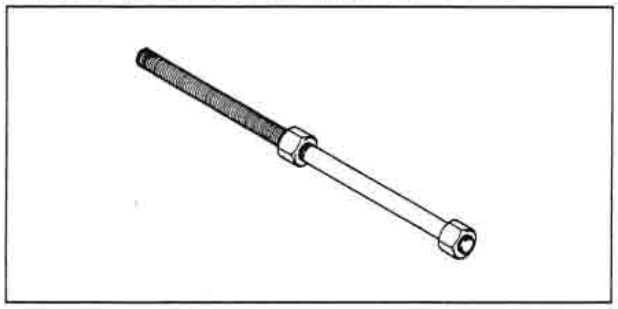

Head Pipe Outer Race Driver: 57001-1076

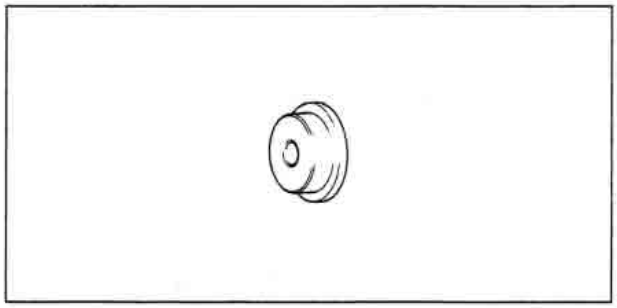

Steering Stem Nut Wrench: 57001-1100

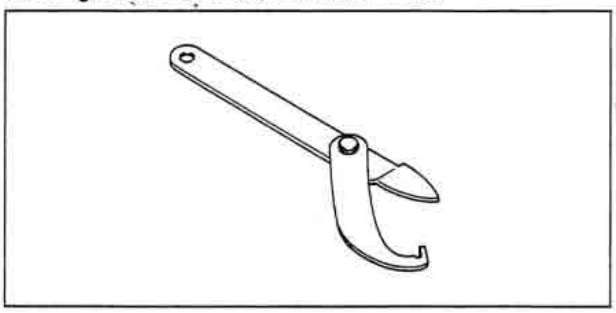

Head Pipe Outer Race Driver: 57001-1106

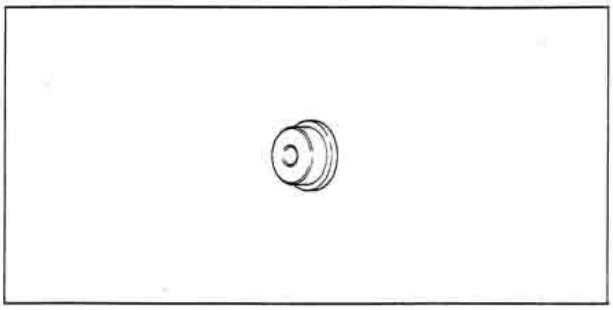

Head Pipe Outer Race Remover: 57001-1107

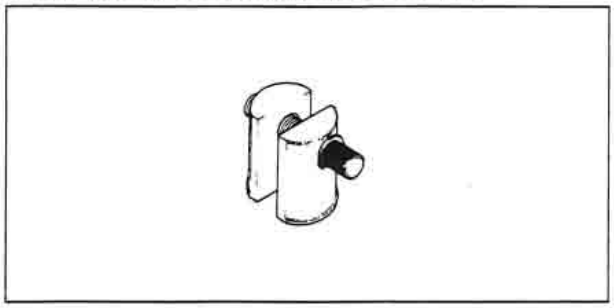

Valve Seat Cutter, 45° – Φ24.5: 57001-1113

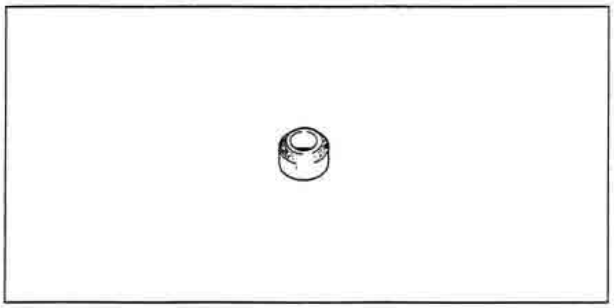

Valve Seat Cutter, 45° – Φ27.5: 57001-1114

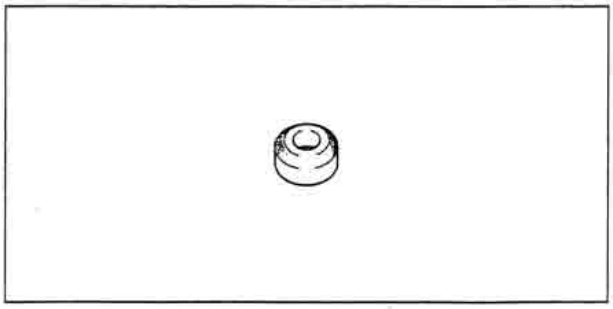

Valve Seat Cutter, 32° – Φ25: 57001-1118

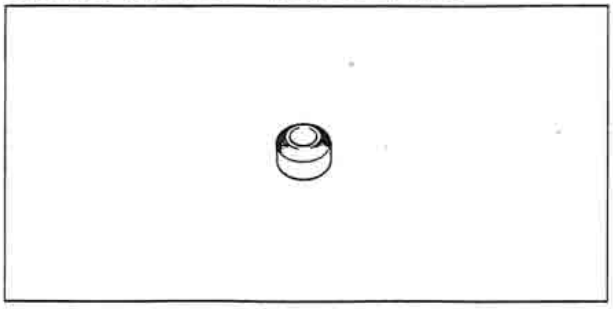

Valve Seat Cutter, 32° – Φ28: 57001-1119

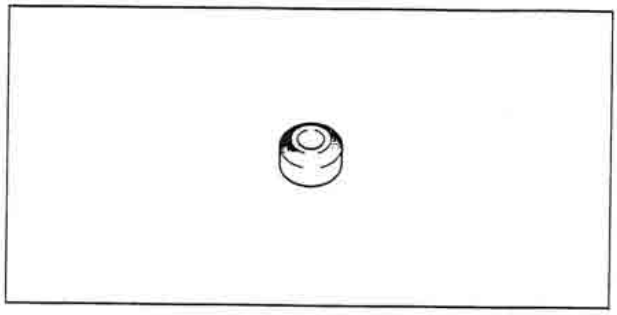

Valve Seat Cutter, 60° – Φ30: 57001-1123

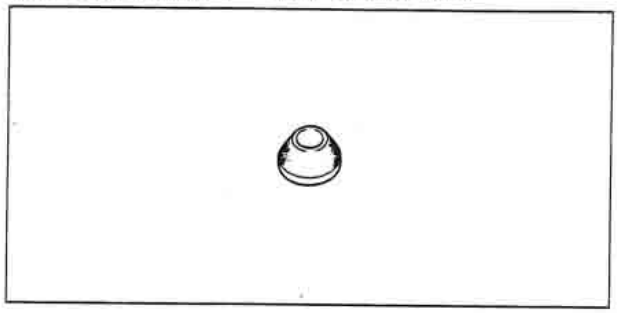

Valve Seat Cutter Holder Bar: 57001-1128

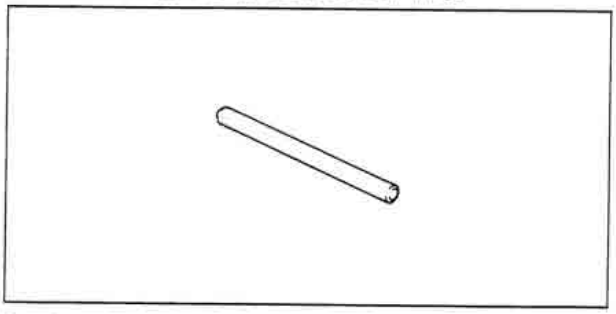

Bearing Driver Set: 57001-1129

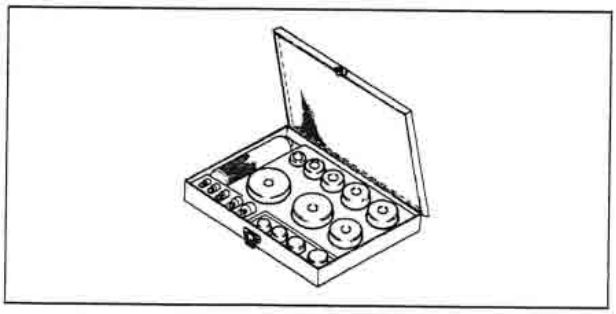

Valve Spring Compressor Adapter, Φ20: 57001-1154

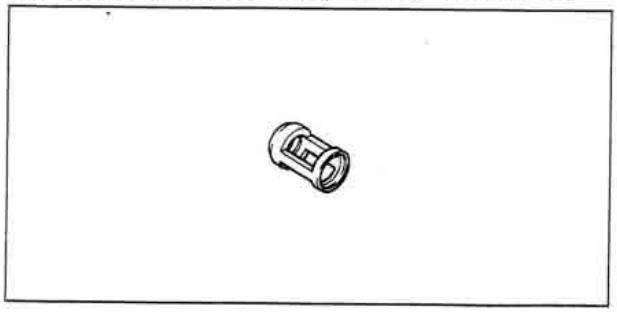

Valve Spring Compressor Adapter, Φ22: 57001-1202

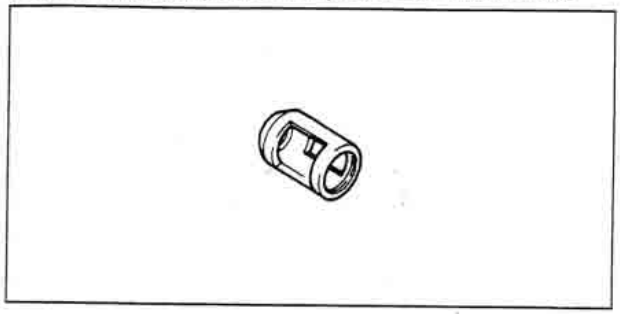

Rotor Puller, M16/M18/M20/M22 x 1.5: 57001-1216

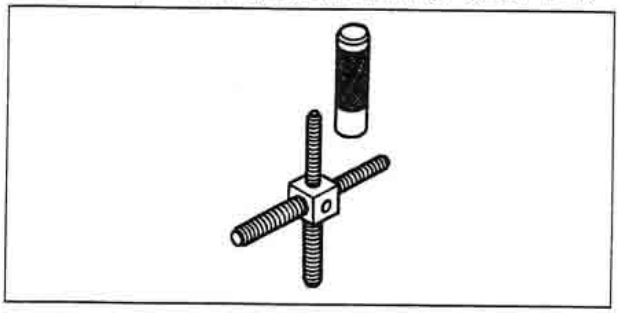

Fork Outer Tube Weight: 57001-1218

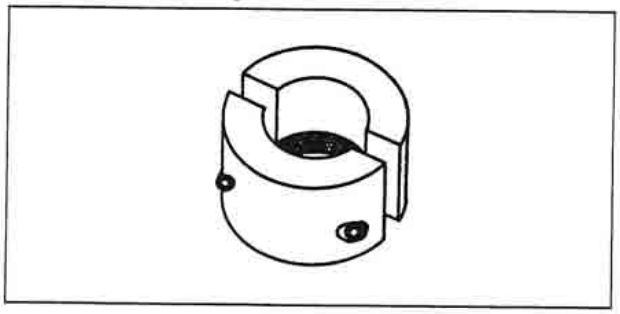

Front Fork Oil Seal Driver: 57001-1219

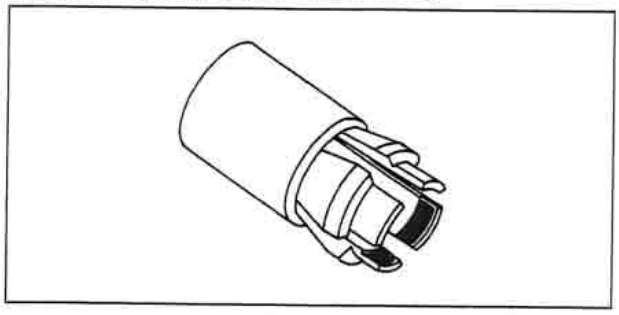

Flywheel Puller, M35 X 1.5: 57001-1223

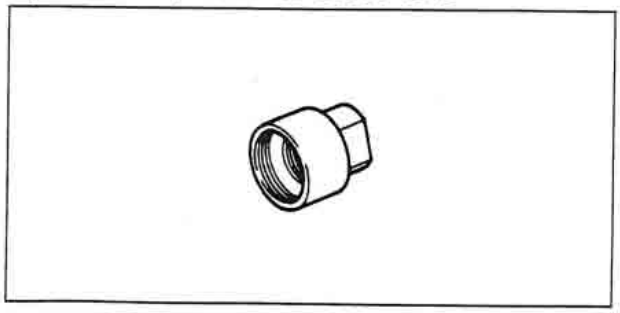

Jack: 57001-1238

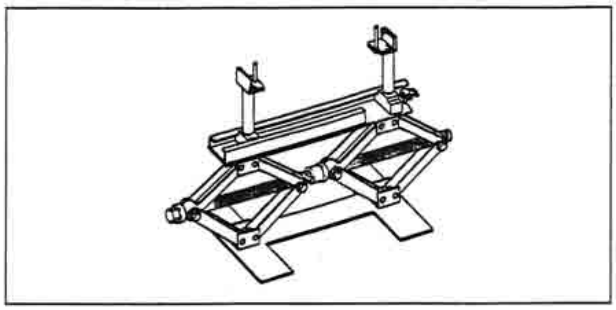

Pilot Screw Adjuster, A: 57001-1239

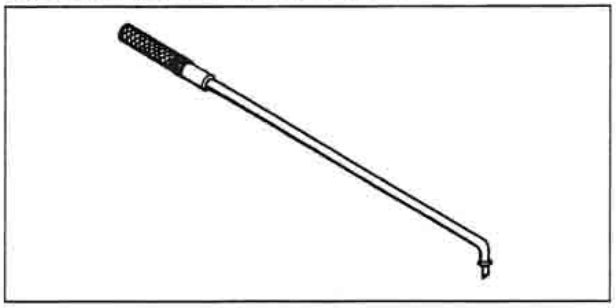

Clutch Holder: 57001-1243

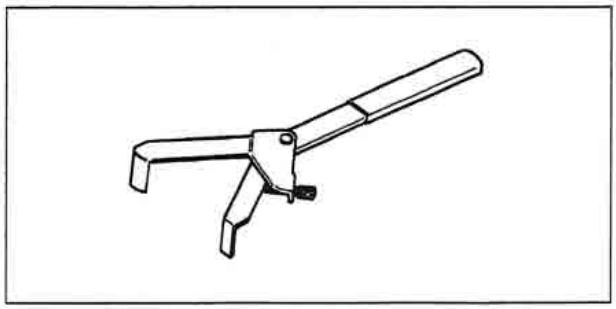

Oil Filter Wrench: 57001-1249

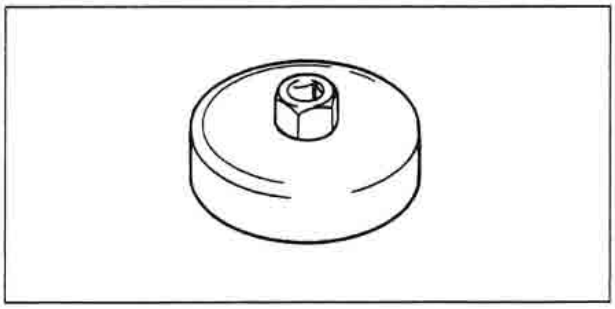

Bearing Remover Shaft: 57001-1265

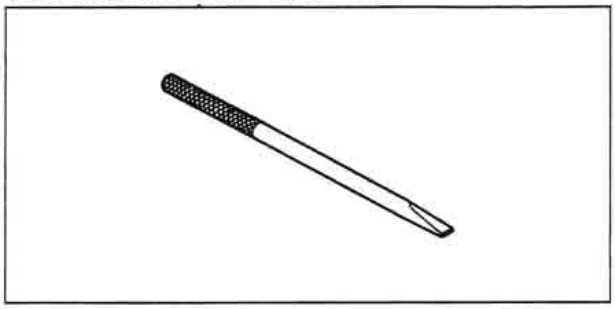

Carburetor Drain Plug Wrench, Hex 3: 57001-1269

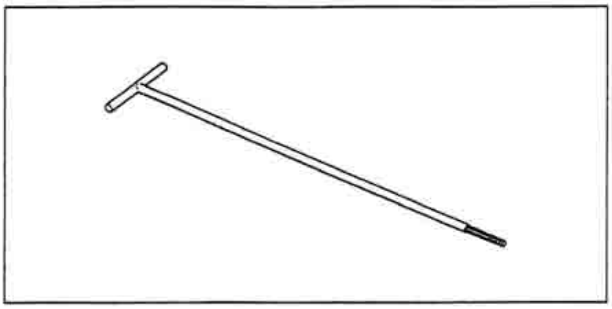

Valve Guide Arbor, Φ4: 57001-1273

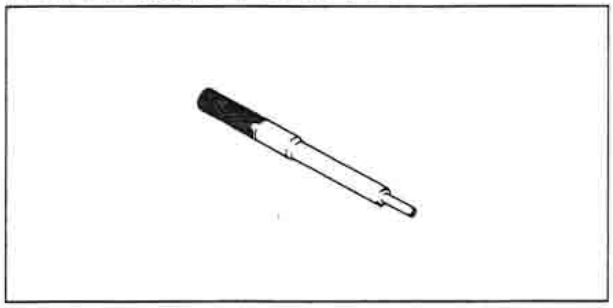

Valve Guide Reamer, Φ4: 57001-1274

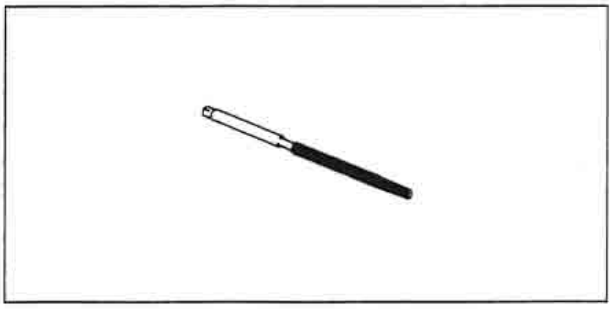

Valve Seat Cutter Holder, Φ4: 57001-1275

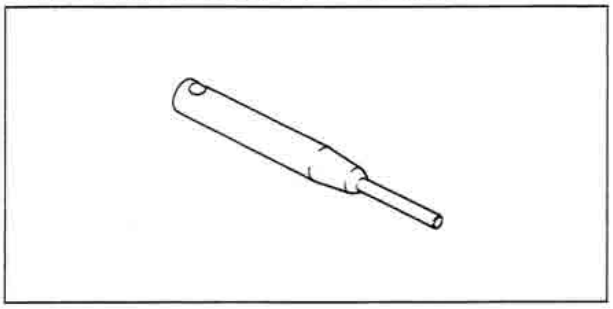

Oil Pressure Gauge Adapter, M18 x 1.5: 57001-1278

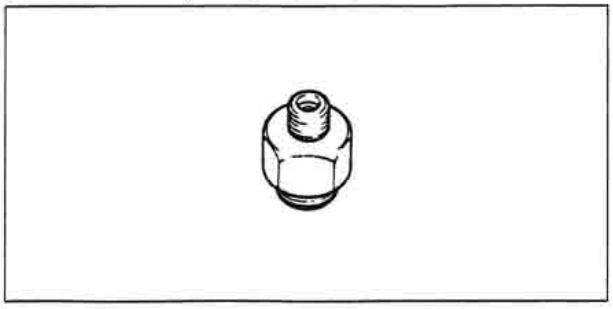

Fork Oil Level Gauge: 57001-1290

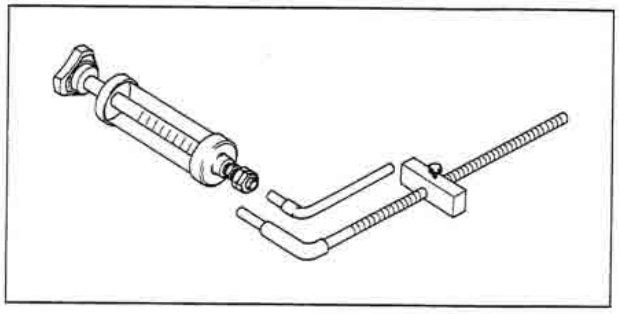

Pilot Screw Adjuster, C: 57001-1292

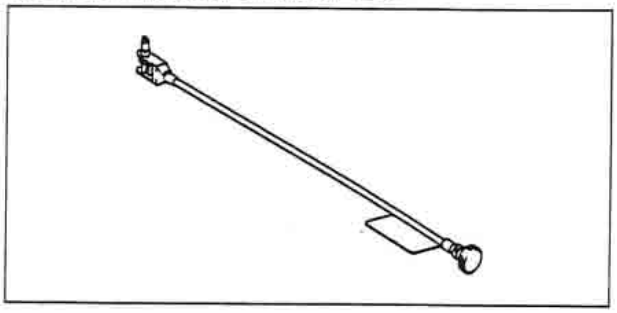

Bearing Remover Head, Φ20 x Φ22: 57001-1293

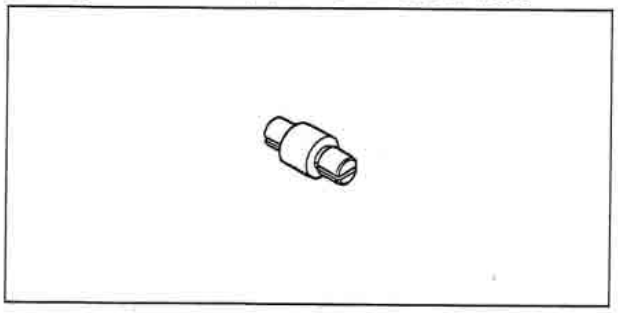

Fork Cylinder Holder: 57001-1297

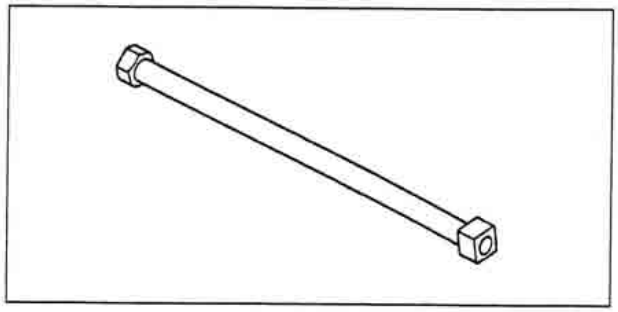

Fork Piston Rod Puller, M10 x 1.0: 57001-1298

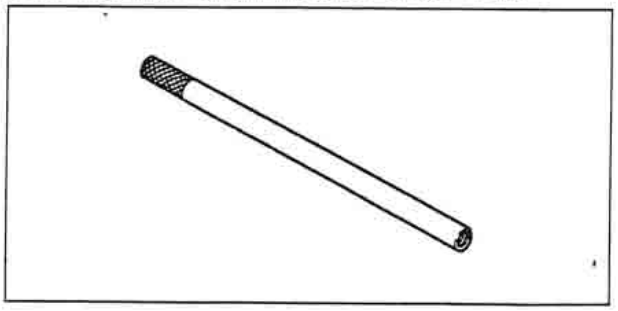

Flywheel Holder: 57001-1313

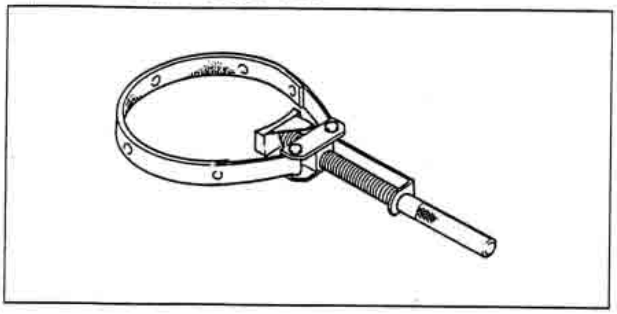

Compression Gauge Adapter, M10 X 1.0: 57001-1317

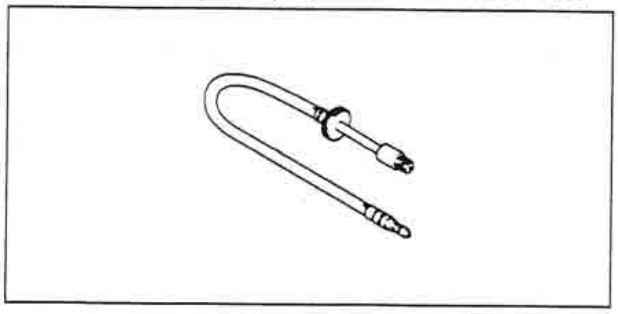

Valve Seat Cutter, 60° – Φ25: 57001-1328

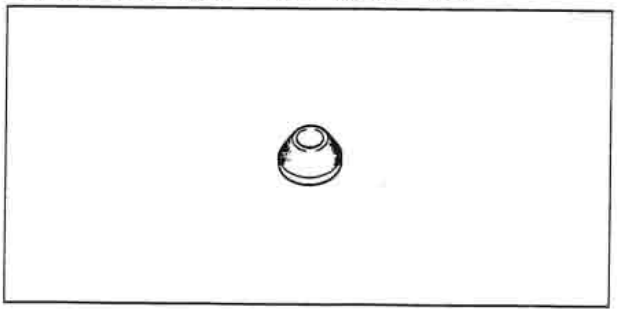

Vacuum Gauge: 57001-1369

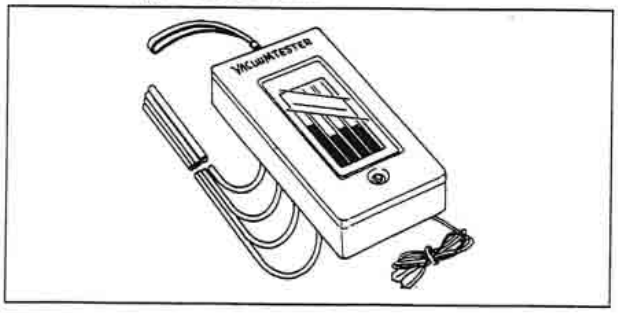

Pilot Screw Adjuster Adapter, Φ5: 57001-1372

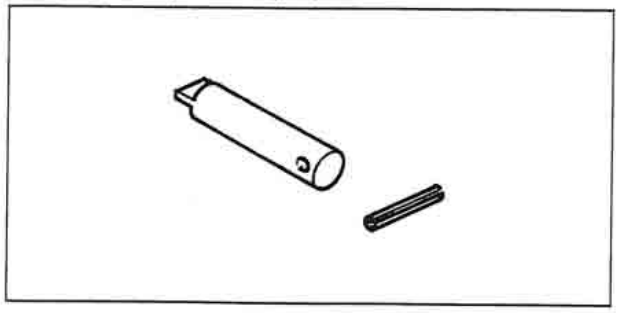

Pilot Screw Adjuster Driver: 57001-1373

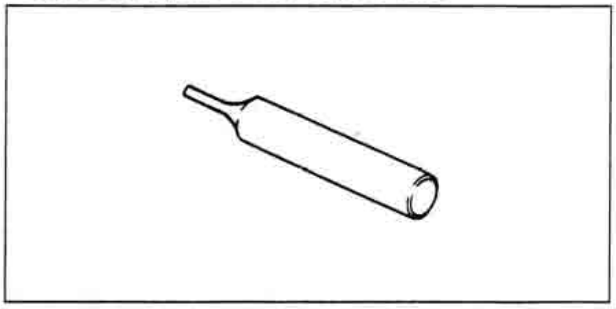

Spark Plug Wrench, 16mm: 92110-1146

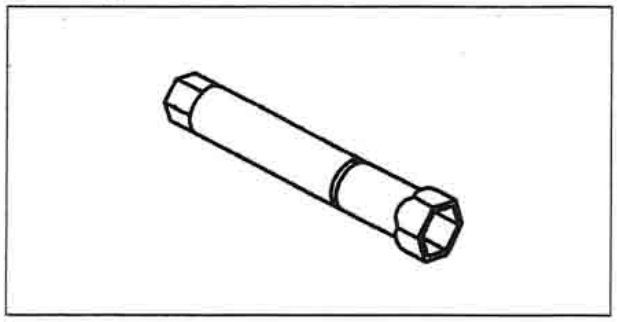

Pressure Cable Luber: k56019-021

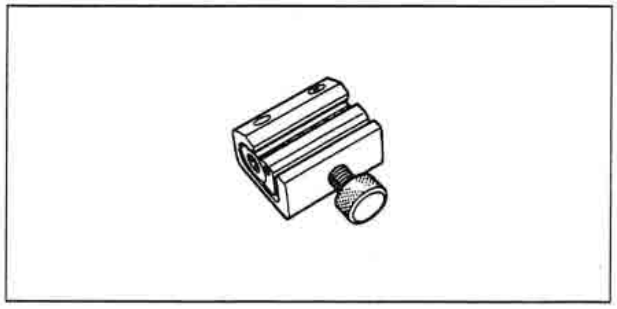

Kawasaki Bond (Silicone Sealant): 56019-120

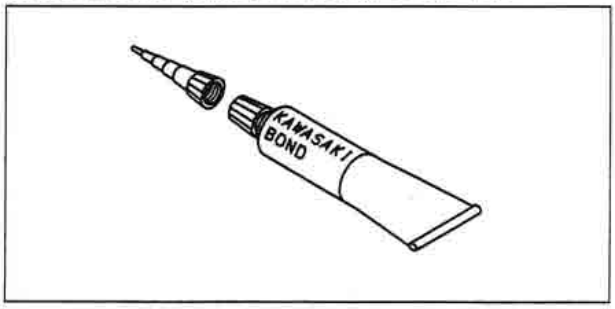

Cable, Wire, and Hose Routing

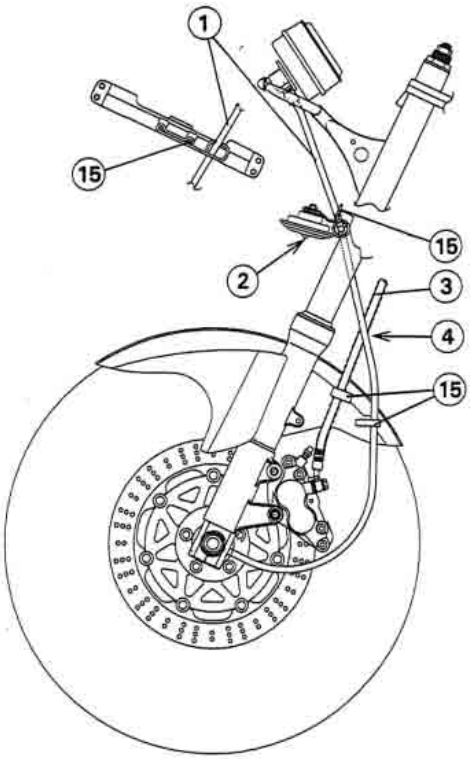

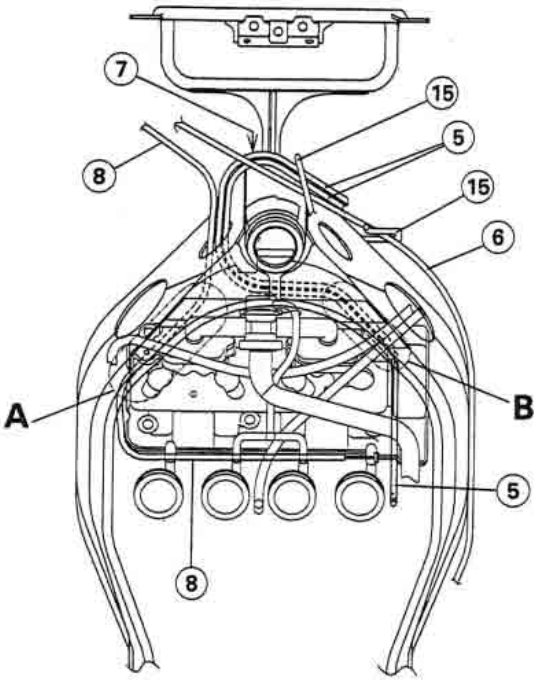

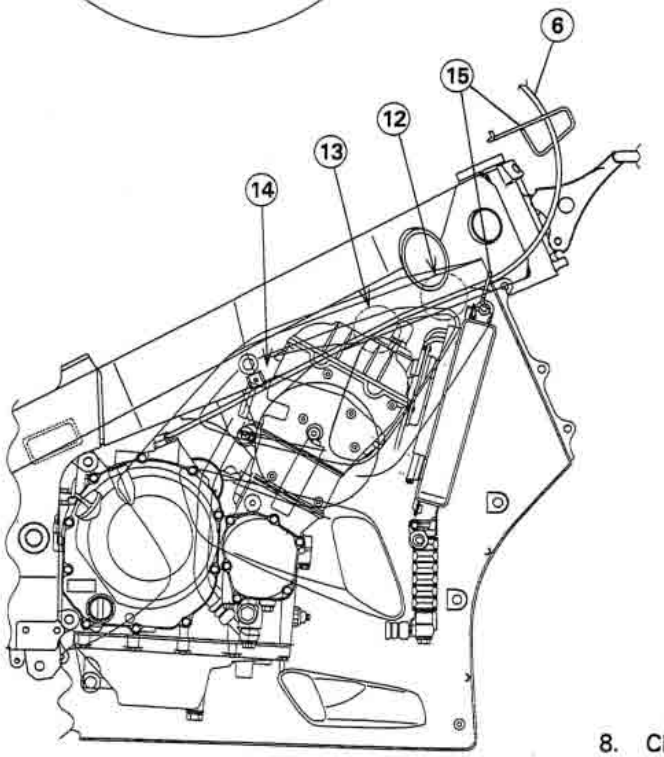

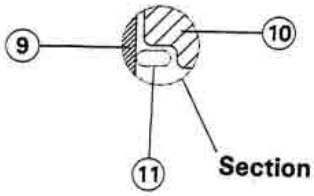

1. Speedometer Cable
2. Run the speedometer cable over the horn.
3. Brake Hose
4. Run the speedometer cable over the left brake hose.
5. Throttle Cables
6. Clutch Cable
7. Run the throttle cables over the clutch cable.
8. Choke Cable
9. Frame
10. Air Cleaner Housing
11. Run the cables and hoses between the frame and air cleaner housing
12. Run the clutch cable outside the frame.
13. Run the clutch cable upper the opening of the lower fairing.
14. Run the clutch cable outside the engine bracket.
15. Clamp

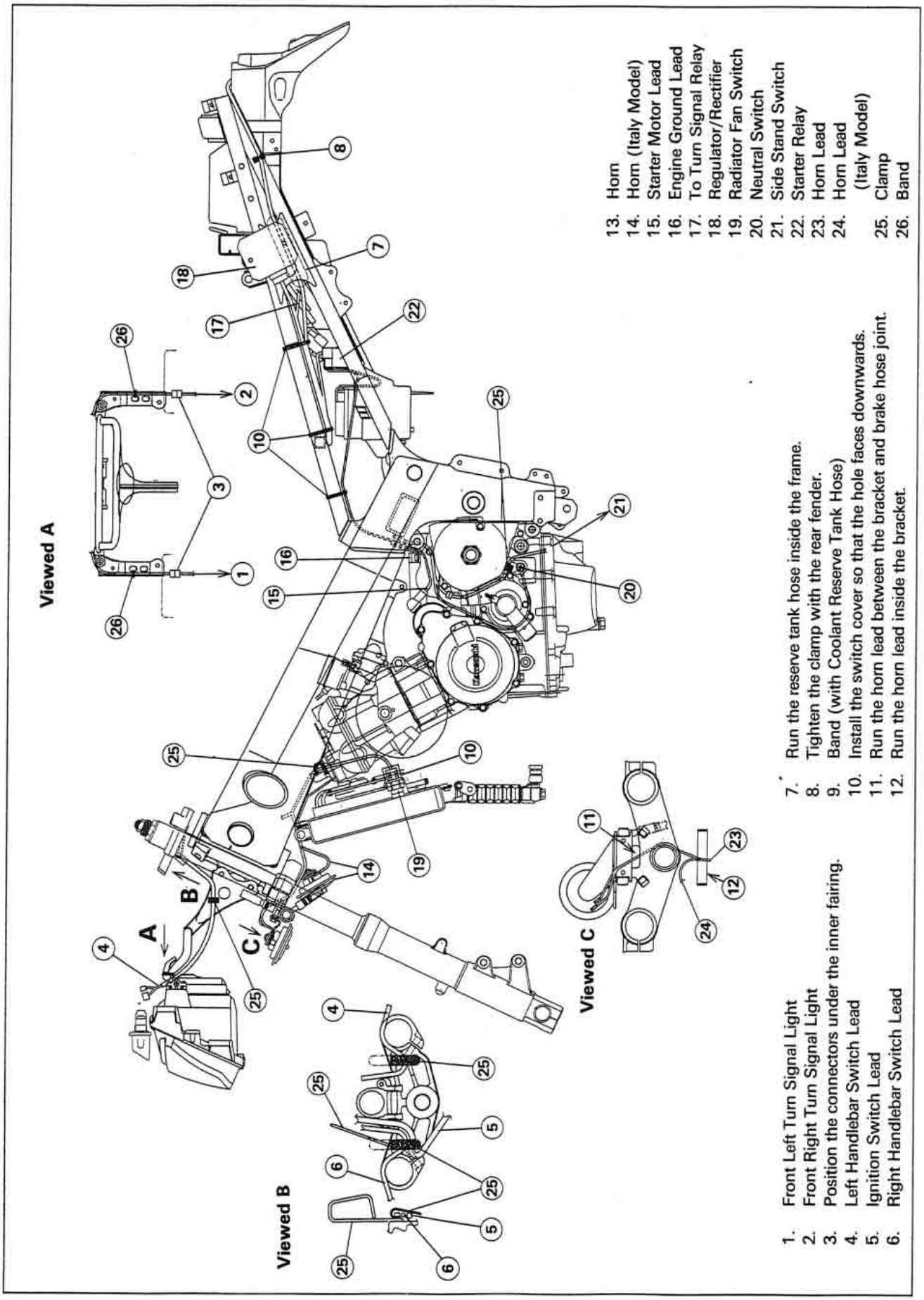
Viewed A
Viewed B
Viewed C
A
B
C
1. Front Left Turn Signal Light
2. Front Right Turn Signal Light
3. Position the connectors under the inner fairing.
4. Left Handlebar Switch Lead
5. Ignition Switch Lead
6. Right Handlebar Switch Lead
7. Run the reserve tank hose inside the frame.
8. Tighten the clamp with the rear fender.
9. Band (with Coolant Reserve Tank Hose)
10. Install the switch cover so that the hole faces downwards.
11. Run the horn lead between the bracket and brake hose joint.
12. Run the horn lead inside the bracket.
13. Horn
14. Horn (Italy Model)
15. Starter Motor Lead
16. Engine Ground Lead
17. To Turn Signal Relay
18. Regulator/Rectifier
19. Radiator Fan Switch
20. Neutral Switch
21. Side Stand Switch
22. Starter Relay
23. Horn Lead
24. Horn Lead (Italy Model)
25. Clamp
26. Band

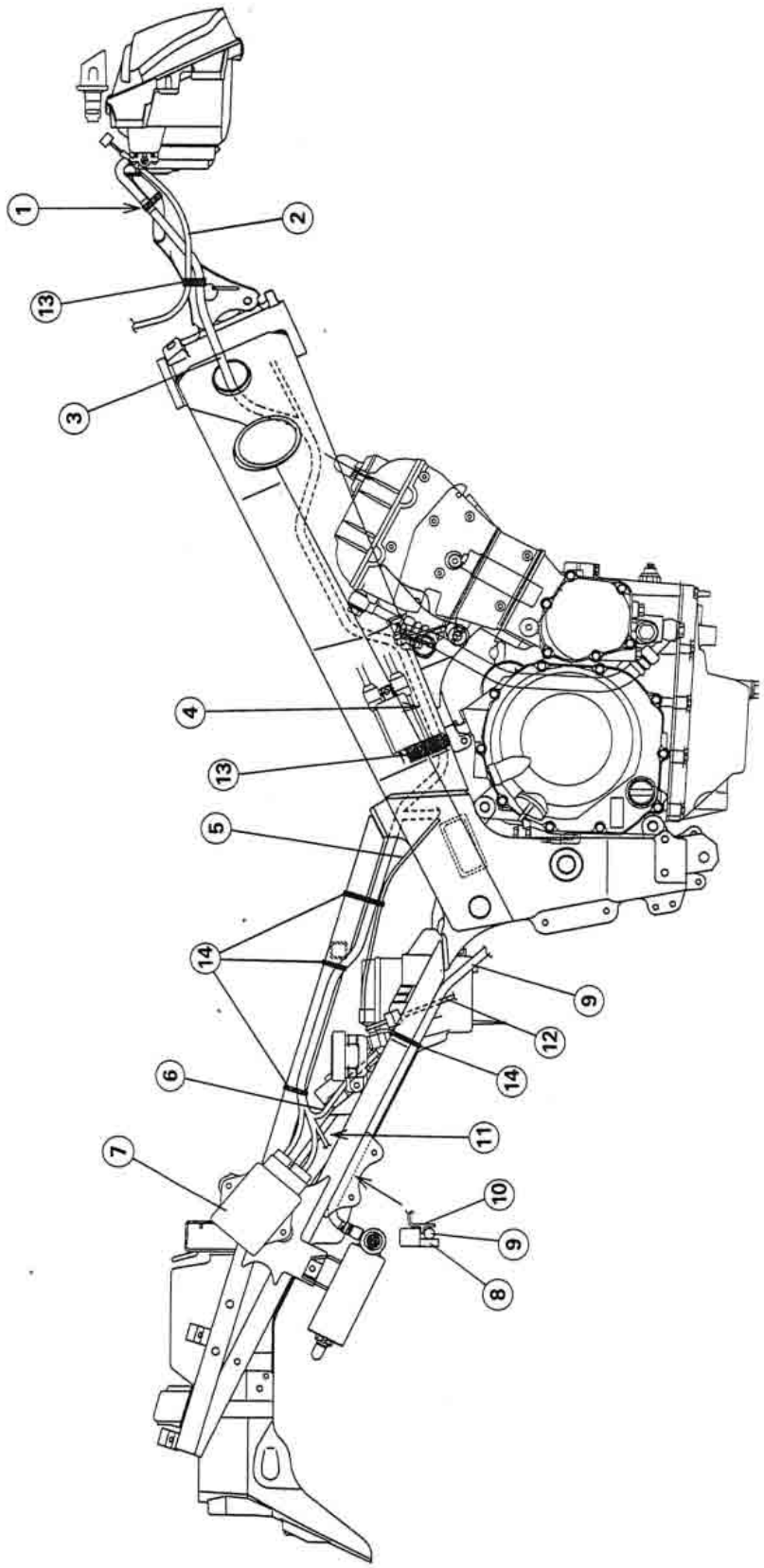

1. Band (White Tape of Main Harness and Curved Point of Bracket)
2. Right Handlebar Switch Lead
3. Main Harness
4. Run the main harness under the ignition coil.
5. Battery Ground (−) Lead
6. To Junction Box and Rear Brake Light Switch
7. IC Igniter
8. Frame
9. Rear Shock Absorber Gas Reservoir Hose
10. Rear Fender
11. Fuel Pump Relay
12. Rear Brake Light Switch lead
13. Clamp
14. Band

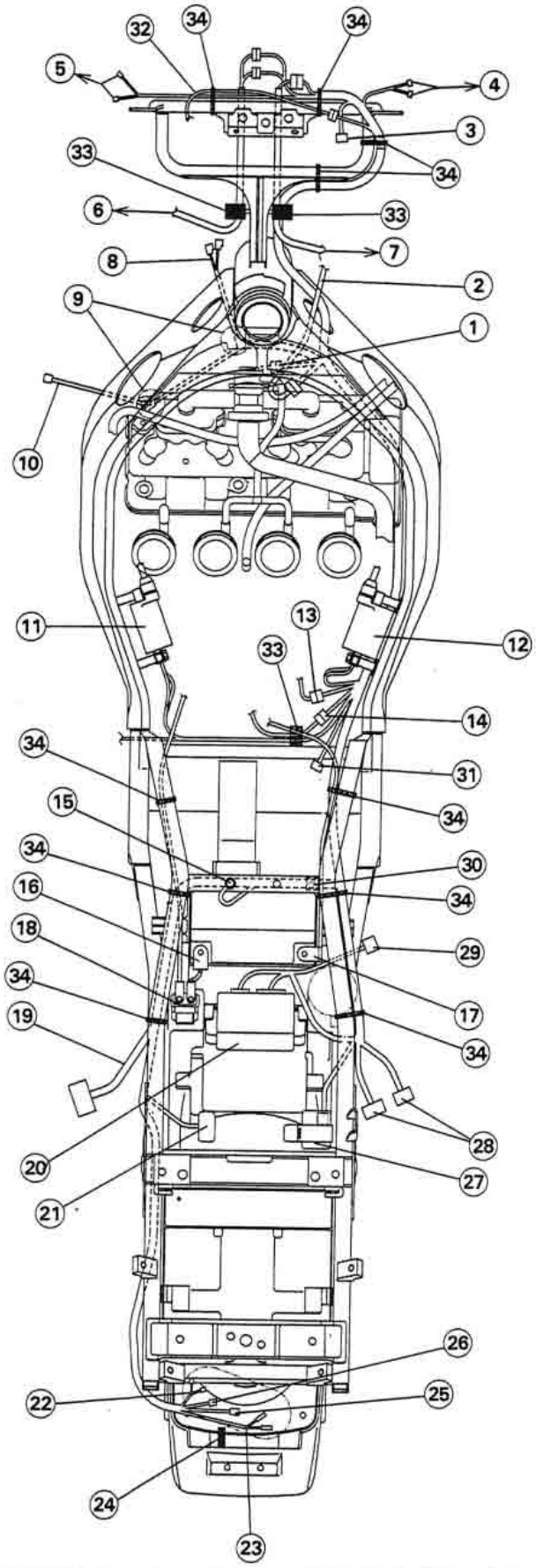

1. Radiator Fan Connector
2. Ignition Switch Lead
3. Headlight Connector
4. Front Right Turn Signal Light
5. Front Left Turn Signal Light
6. Left Handlebar Switch
7. Right Handlebar Switch
8. Horn Leads
9. Run the leads through each opening of the baffle plate.
10. Radiator Fan Switch Lead
11. #1, #4 Ignition Coil
12. #2, #3 Ignition Coil
13. Pickup Coil, Oil Pressure Switch, Water Temperature Sensor Leads Connector
14. Alternator Lead Connector
15. Tighten the chassis ground lead with the fuel tank bracket.
16. Battery Positive (+) Lead
17. Battery Ground (−) Lead
18. Starter Relay
19. Regulator/Rectifier Lead
20. Junction Box
21. Turn Signal Relay
22. Rear Left Turn Signal Light Lead
23. Rear Right Turn Signal Light Lead
24. Tighten the clamp with the license plate light left bolt.
25. Tail/Brake Lights Lead
26. License Plate Light Lead
27. Fuel Pump Relay
28. IC Igniter Connectors
29. Rear Brake Light Switch Lead
30. Position the white tape here.
31. Fuel Pump Lead Connector
32. Meter Unit Lead
33. Clamp
34. Band

Front Brake System

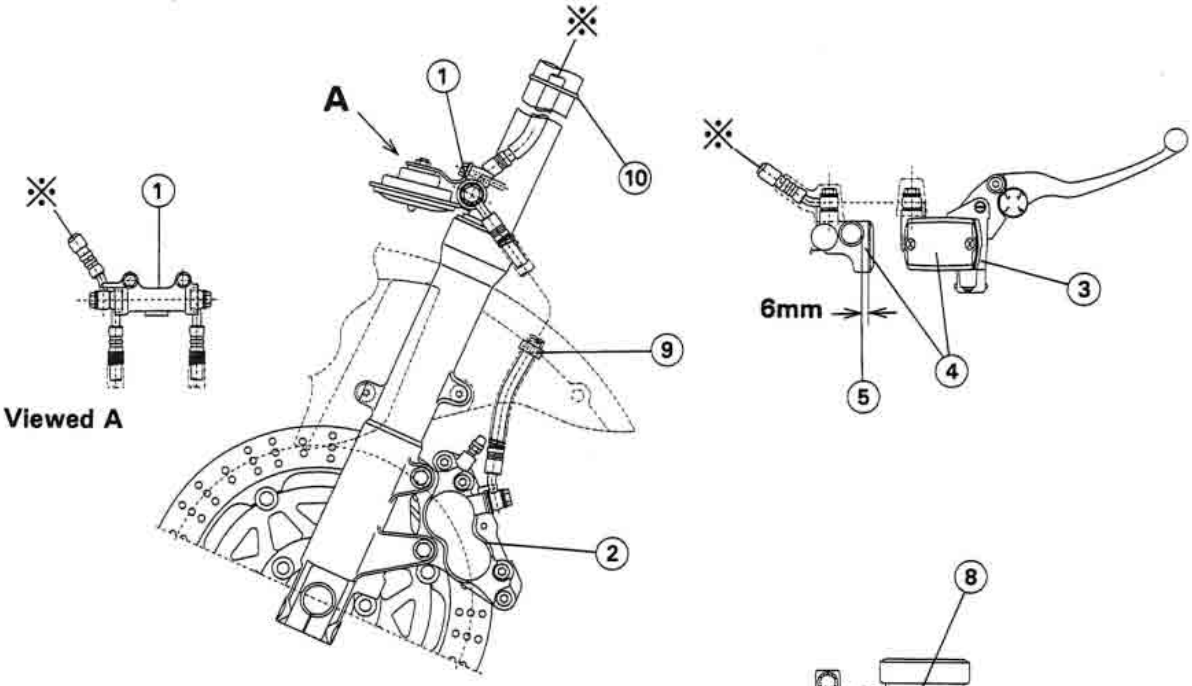

Rear Brake System

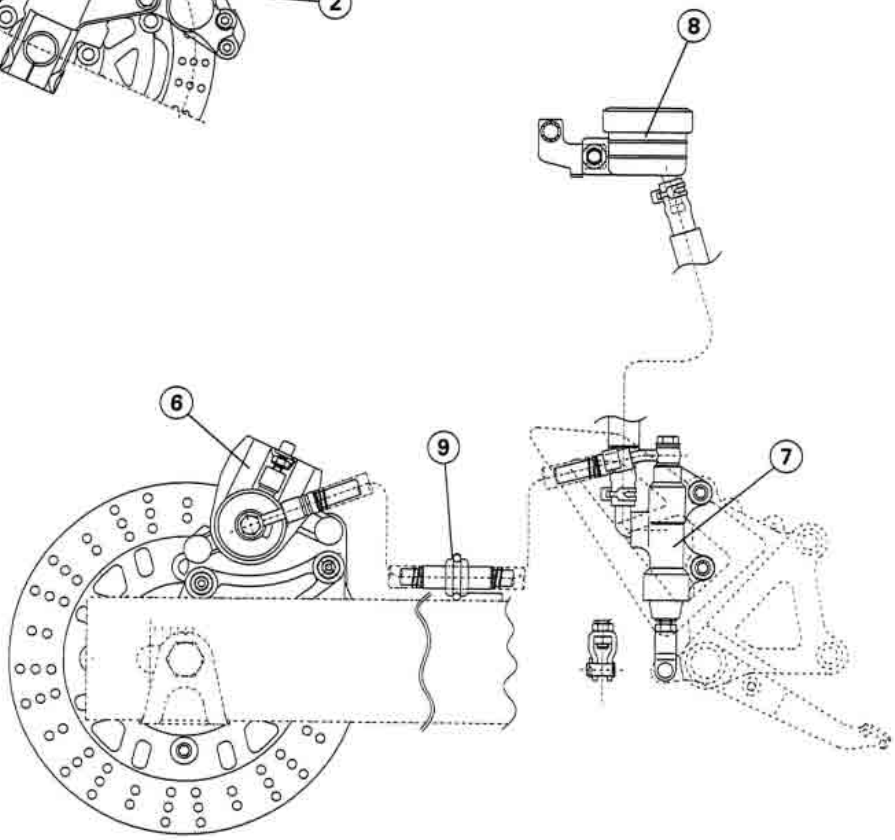

1. Brake Hose Joint
2. Front Brake Caliper
3. Front Brake Master Cylinder
4. Front Brake Reservoir
5. Upper Level of Brake Fluid
6. Rear Brake Caliper
7. Rear Brake Master Cylinder
8. Rear Brake Reservoir
9. Clamp
10. Band

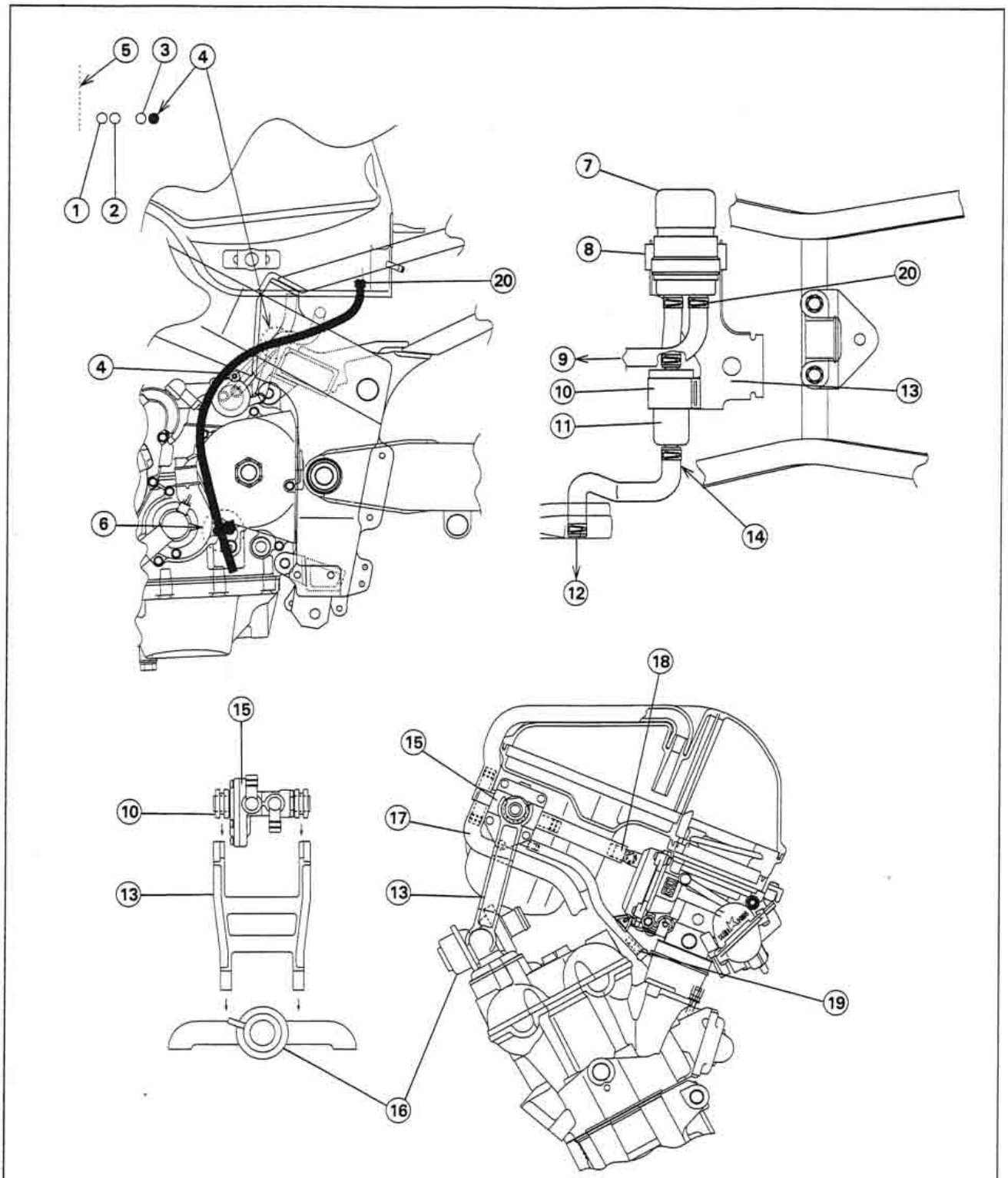

1. Fuel Tank ON Hose
2. Fuel Tank RES Hose
3. Fuel Filter Hose
4. Fuel Tank Drain Hose
5. Frame Center
6. Clamp (Fuel Tank Drain Hose and Air Cleaner Drain Hose)
7. Fuel Pump
8. Holder
9. To Carburetor
10. Damper
11. Fuel Filter
12. To Fuel Tap
13. Bracket
14. Paint Mark
15. Vacuum Valve
16. Vacuum Switch Valve
17. To Canister (California Model)
18. Carburetor Air Vent Fitting
19. Vacuum Fitting
20. Clamp

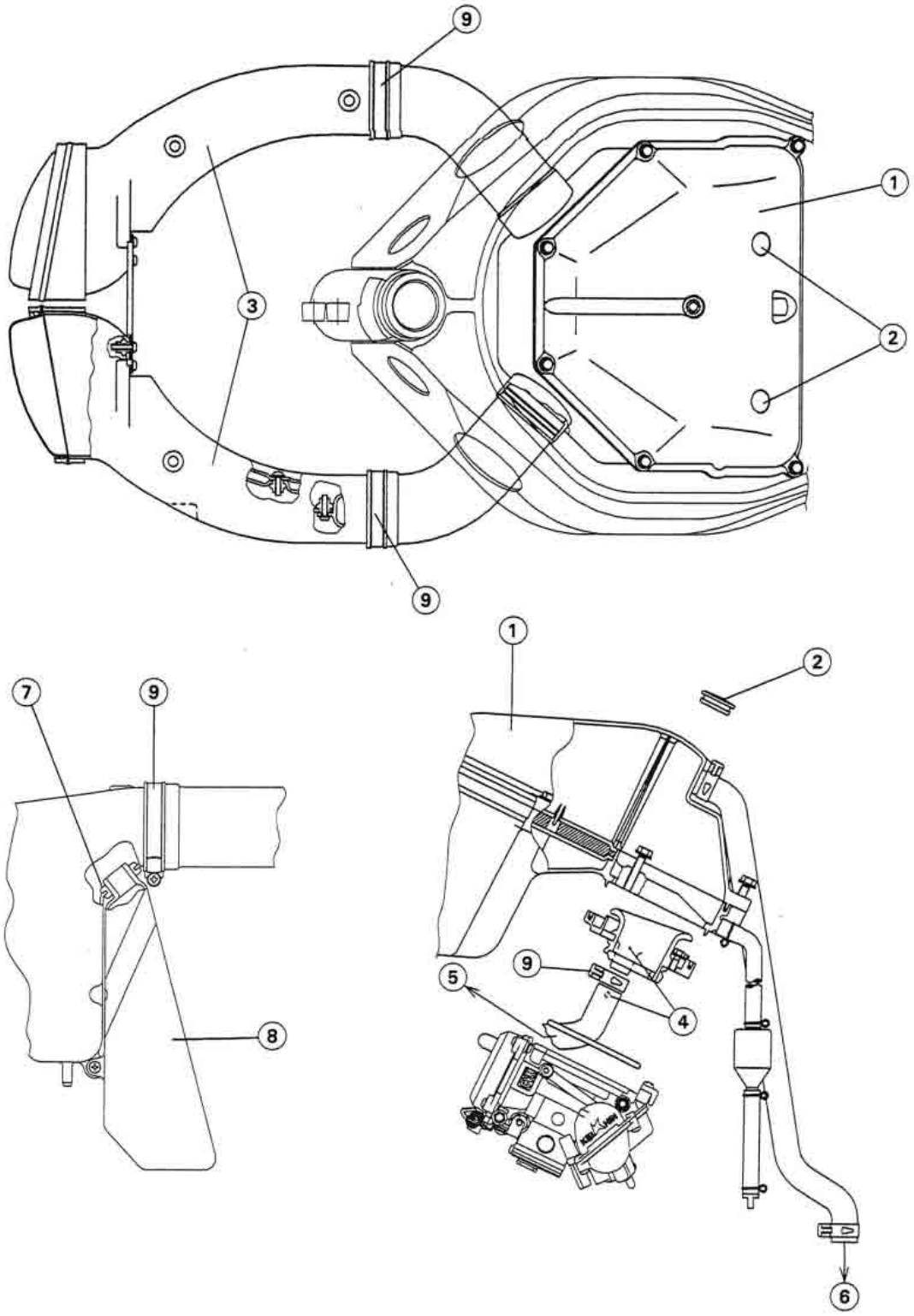

1. Air Cleaner Housing
2. Rubber Plugs
3. Air Intake Ducts
4. Align the paint mark with punch mark.
5. To Vacuum Switch Valve
6. To Crankcase
7. Grommet
8. Resonator Tank
9. Clamp

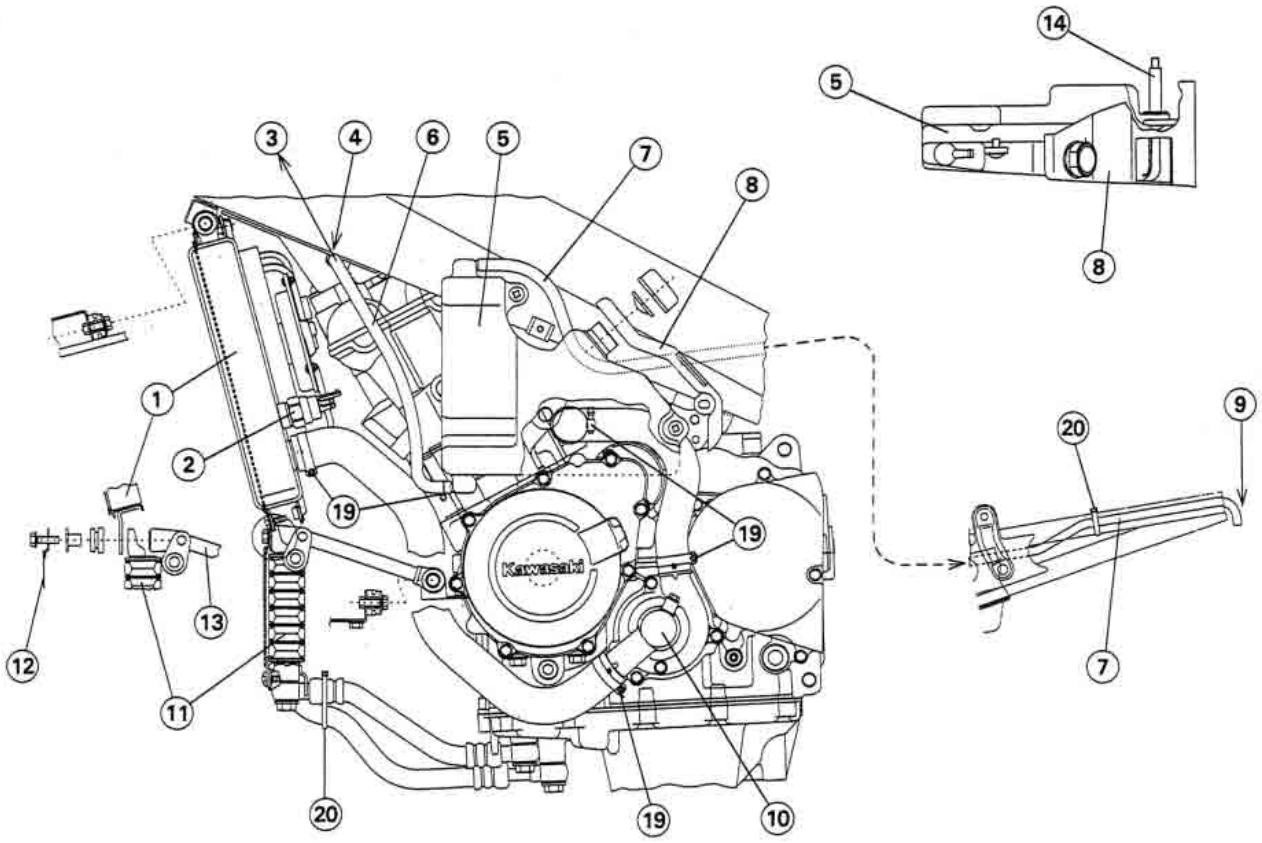

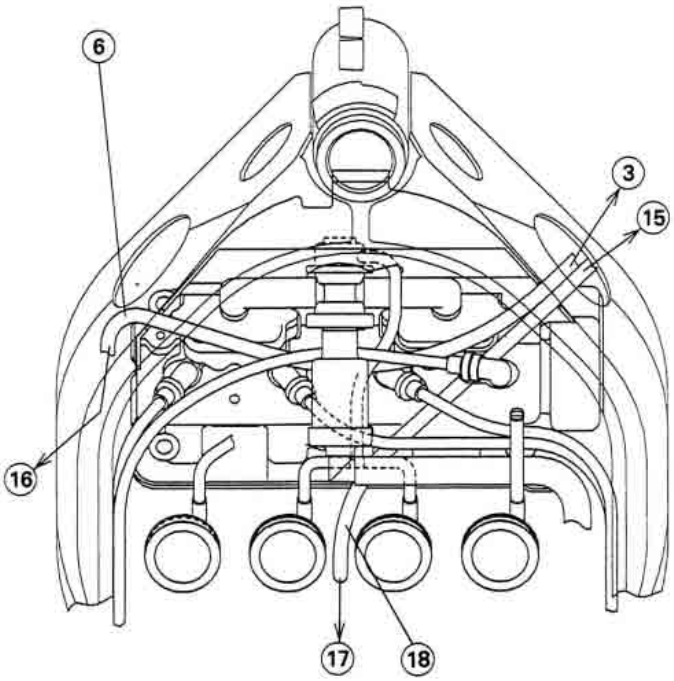

1. Radiator
2. Radiator Fan Switch
3. To Radiator Cap
4. Run the hose through the opening of baffle plate.
5. Coolant Reserve Tank
6. Reserve Tank Hose
7. Reserve Tank Overflow Hose
8. Reserve Tank Cover
9. Face the hose toward the downward.
10. Water Pump
11. Oil Cooler
12. Oil Cooler Screen
13. Bracket
14. Collar
15. To Radiator
16. To Reserve Tank
17. To Coolant By-pass Fitting
18. Coolant By-pass Hose
19. Clamp
20. Band

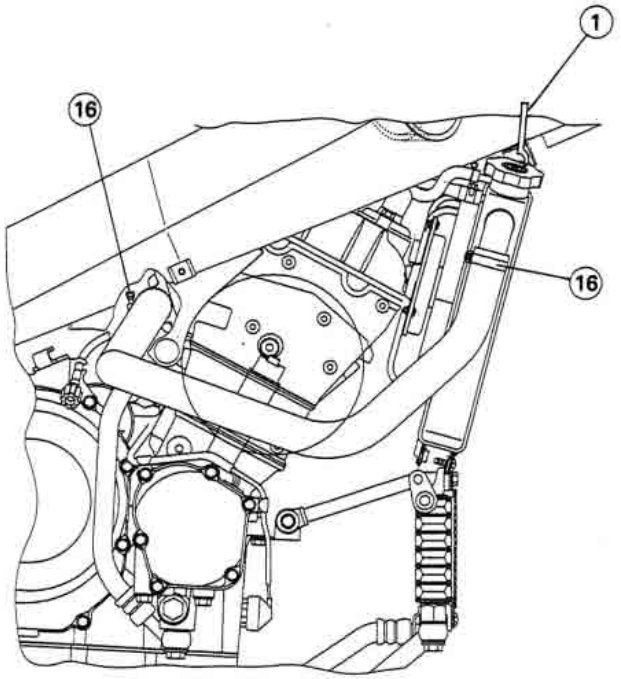

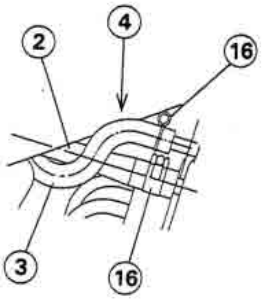

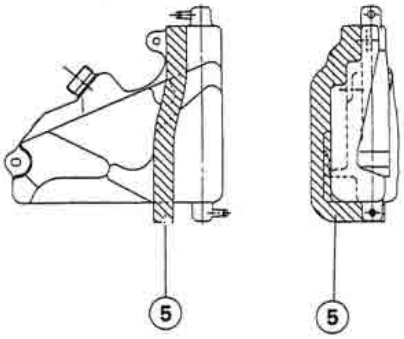

(AR, FG, FR, IT, KR, NL, ST, UK Models)

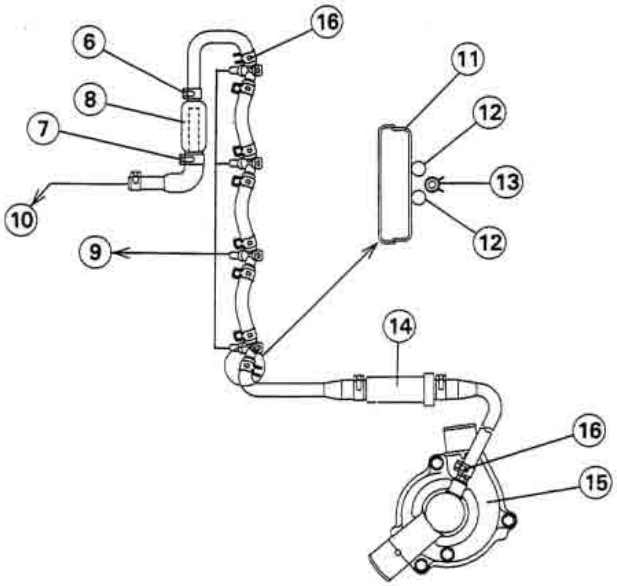

AR: Austria
FG: Germany
FR: France
IT: Italy
KR: Korea
NL: Netherlands
ST: Switzerland
UK: U.K.

1. Tighten the clamp with the radiator right upper bolt.
2. Coolant By-pass Hose
3. Reserve Tank Hose
4. Run the by-pass hose outside the reserve tank hose.
5. Damper
6. Thin Clamp
7. Thick Clamp
8. Water Filter
9. To Carburetor
10. To Cylinder
11. Frame
12. Spark Plug Leads
13. Face the clip of the clamp opposite the spark plug leads.
14. Coolant Valve
15. Water Pump Cover
16. Clamp

Evaporative Emission Control System (California Model)

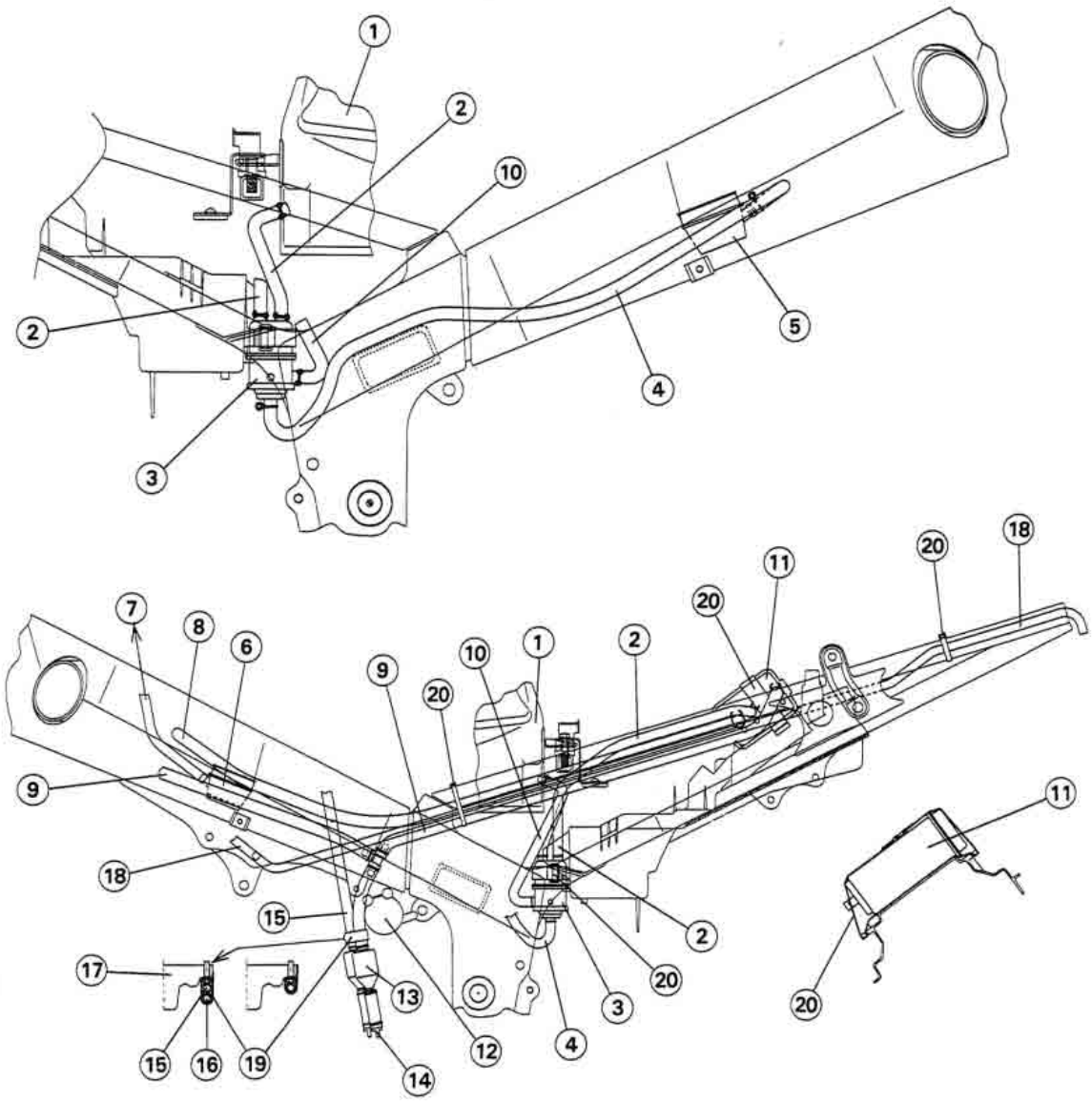

1. Fuel Tank
2. Breather Hose (Blue)
3. Separator
4. Vacuum Hose (white)
5. #4 Carburetor Holder
6. #1 Carburetor Holder
7. Vacuum Hose (To Vacuum Valve)
8. Purge Hose
9. Carburetor Vent Hose (Yellow)
10. Return Hose (Red)
11. Canister
12. Fuel Tap
13. Catch Tank
14. Plug
15. Drain Hose (Air Cleaner Housing)
16. Drain Hose
17. Water Pump Cover
18. Coolant Reserve Tank Overflow Hose
19. Clamp
20. Band

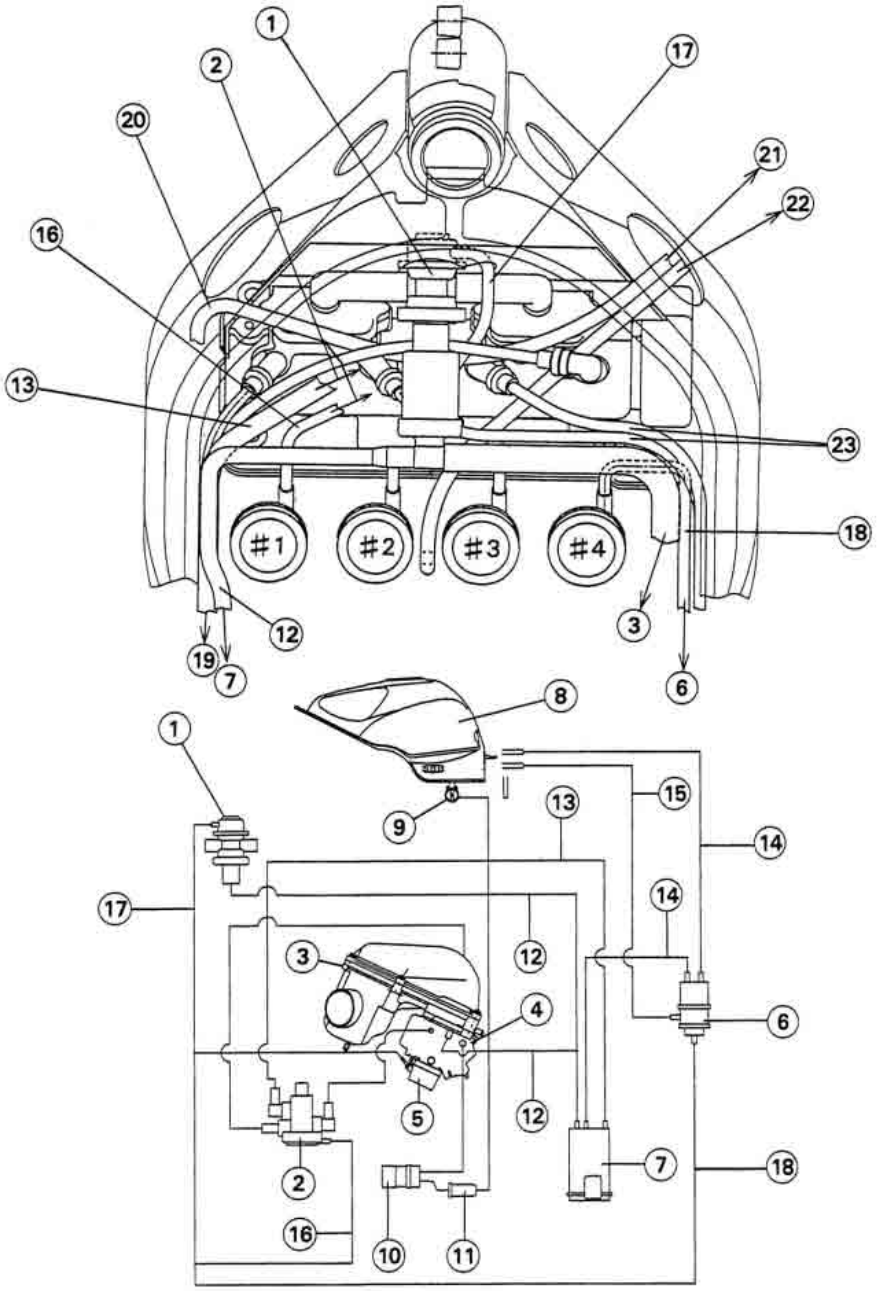

1. Vacuum Switch Valve
2. Vacuum Valve
3. Air Cleaner Housing
4. Carburetor
5. Carburetor Holder
6. Separator
7. Canister
8. Fuel Tank
9. Fuel Tap
10. Fuel Pump
11. Fuel Filter
12. Purge Hose (Green)
13. Carburetor Vent Hose (Yellow)
14. Breather Hose (Blue)
15. Return Hose (Red)
16. Vacuum Hose (#1 Fitting)
17. Vacuum Hose (#2, 3 Fittings)
18. Vacuum Hose (#4 Fitting, White)
19. To Fitting ~ Canister
20. Coolant Reserve Tank Hose
21. To Radiator Cap
22. To Radiator Tank
23. Spark Plug Leads

2

Fuel System

Table of Contents

Exploded View

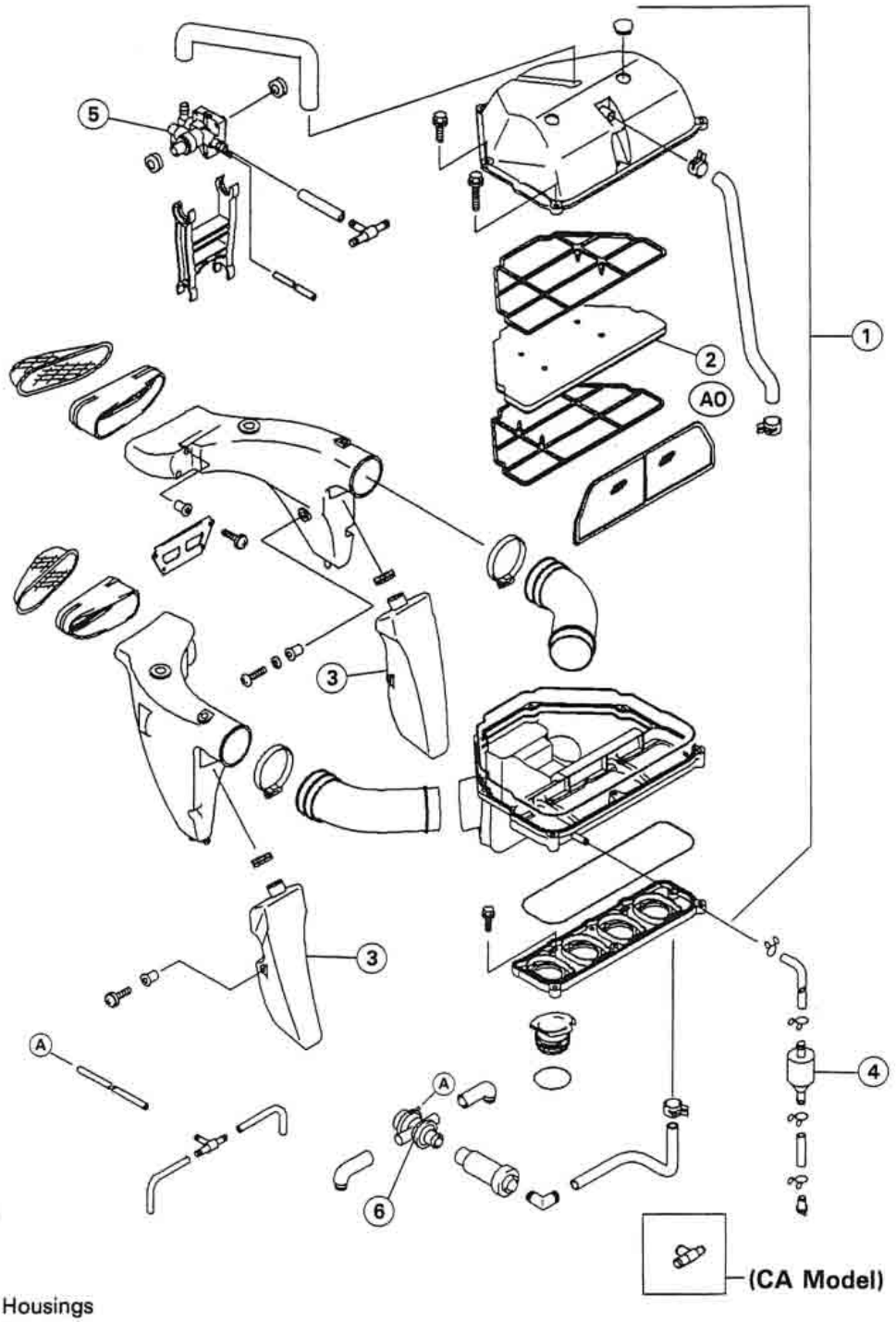

1. Air cleaner Housings
2. Air cleaner Element
3. Resonators
4. Catch Tank
5. Vacuum Vlave
6. Vacuum Switch Valve

AO: Apply high-quality-form-air-filter oil
CA: California

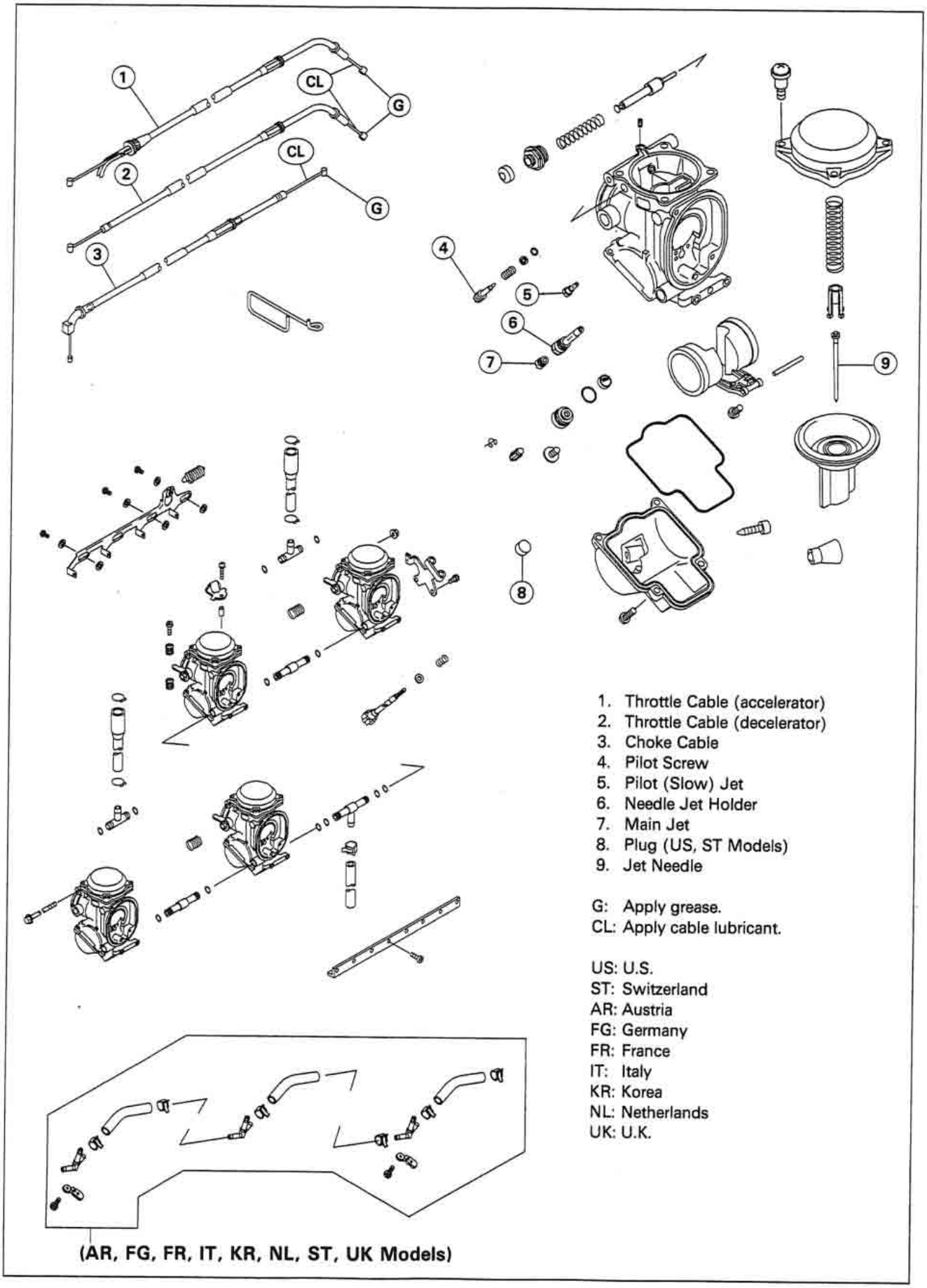

1. Throttle Cable (accelerator)
2. Throttle Cable (decelerator)
3. Choke Cable
4. Pilot Screw
5. Pilot (Slow) Jet
6. Needle Jet Holder
7. Main Jet
8. Plug (US, ST Models)
9. Jet Needle

G: Apply grease.
CL: Apply cable lubricant.

US: U.S.
ST: Switzerland
AR: Austria
FG: Germany
FR: France
IT: Italy
KR: Korea
NL: Netherlands
UK: U.K.

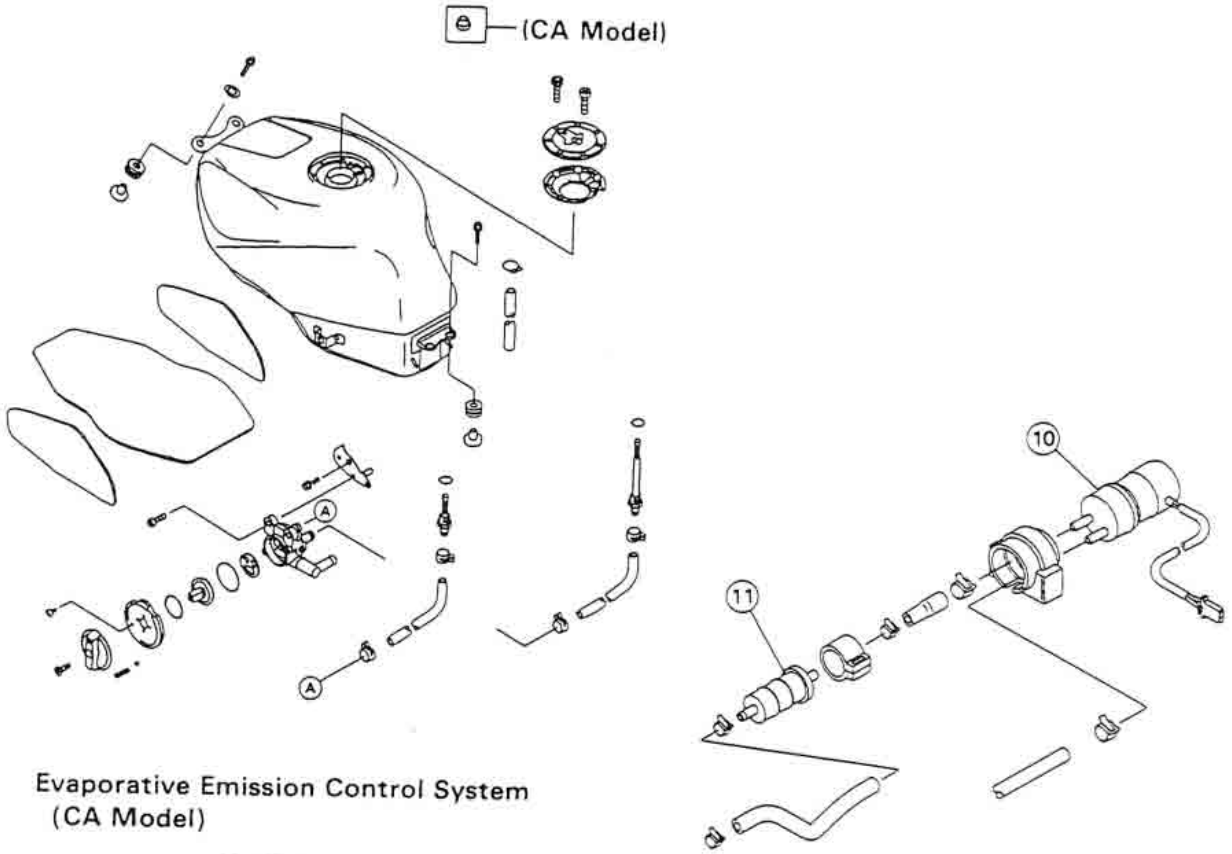

Evaporative Emission Control System
(CA Model)

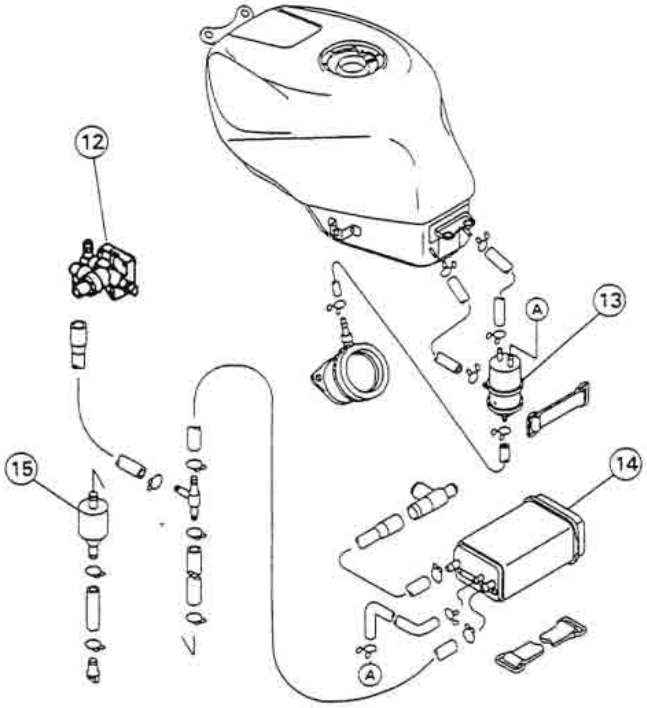

10. Fuel Pump
11. Fuel Filter
12. Vacuum Valve
13. Separator
14. Canister
15. Catch Tank

CA:California

Specifications

Item	Standard
Throttle Grip and Cables:	
Throttle grip free play	2 ~ 3 mm
Choke Cable:	
Free Play	2 ~ 3 mm
Carburetors:	
Make, type	KEIHIN, CVKD36 × 4
Main jet	(#1, #4 cyl.) #145, (#2, #3 cyl.) #150
Main air jet	#60
Jet needle	N1VV
Pilot jet (slow jet)	#35
Pilot air jet (slow air jet)	#100
Pilot screw (turns out)	2 turns out, (US)(CA)(ST) –
Starter jet	#50
Idle speed	1,100 ± 50 r/min (rpm), (ST) 1,300 ± 50 r/min (rpm)
Carburetor synchronization vacuum	Less than 2.7 kPa (2 cm Hg) difference between any two carburetors
Service fuel level	9 ± 1 mm below the lower end of the float level mark
Float height	17 ± 2 mm

(ST): Swiss Model (US): U.S. Model (CA): California Model

Special Tools – **Pressure Cable Luber: k56019-021**
Vacuum Gauge: 57001-1369
Pilot Screw Adjuster, C: 57001-1292
Carburetor Drain Plug Wrench, Hex 3: 57001-1269
Fuel Level Gauge: 57001-1017
Fork Oil Level Gauge: 57001-1290

(as required)
Pilot Screw Adjuster Adapter, Φ5: 57001-1372
Pilot Screw Adjuster Driver: 57001-1373

Throttle Grip and Cables

Free Play Inspection

- Check the throttle grip free play [A].

★If the free play is incorrect, adjust the throttle cable.

Throttle Grip Free Play
Standard: 2 ~ 3 mm

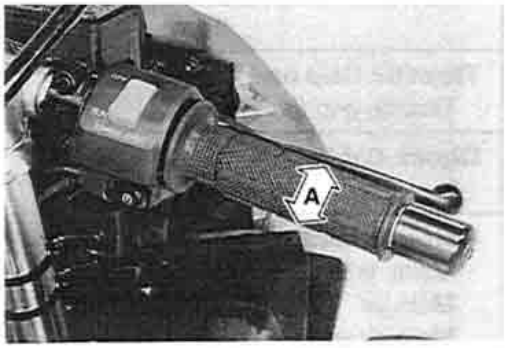

Free Play Adjustment

- Loosen the locknut [A].
- Turn the adjuster [B] until the proper amount of throttle grip free play is obtained.
- Tighten the locknut securely.

★If the proper amount of free play cannot be obtained by using the adjuster only, use the adjusters at the carburetors side.

- Loosen the locknut, and screw the adjuster at the upper end of the accelerator cable all the way in.
- Tighten the locknut securely.

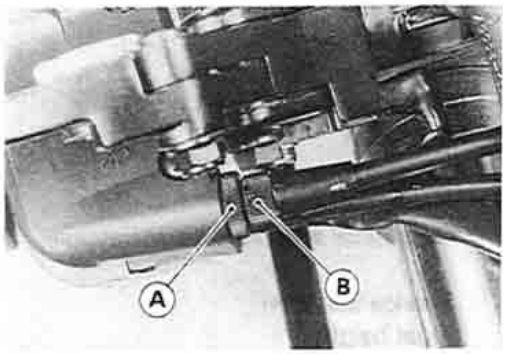

- Remove the fuel tank and air cleaner housing (see Fuel Tank Removal and Air Cleaner Housing Removal).
- Loosen the locknuts [A].
- Turn the adjusters [B] until the proper amount of throttle grip free play is obtained.
- Tighten the locknuts securely.

★If the proper amount of free play can not be obtained in the adjustable range of the adjuster, use the adjuster at the upper end of the accelerator cable again.

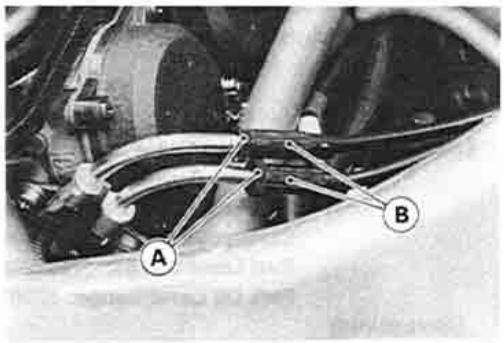

Cable Installation

- Install the throttle cables in accordance with Cable Routing section in General Information chapter.
- Install the lower ends of the throttle cables in the cable bracket on the carburetor after installing the upper ends of the throttle cables in the grip.
- After installation, adjust each cable properly.

⚠WARNING

Operation with incorrectly routed or improperly adjusted cables could result in an unsafe riding condition.

Cable Lubrication

Whenever the cable is removed, lubricate the throttle cable as follows:

- Apply a thin coating of grease to the cable lower ends.
- Lubricate the cable with a penetrating rust inhibitor.

Special Tool – Pressure Cable Luber: k56019-021 [A]

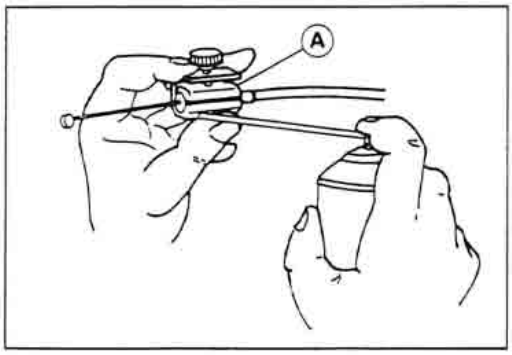

Choke Cable

Free Play Inspection

- Check that the choke inner cable slides smoothly by moving the choke lever [A] to the front and rear.

★If there is any irregularity, check the choke cable play [B].

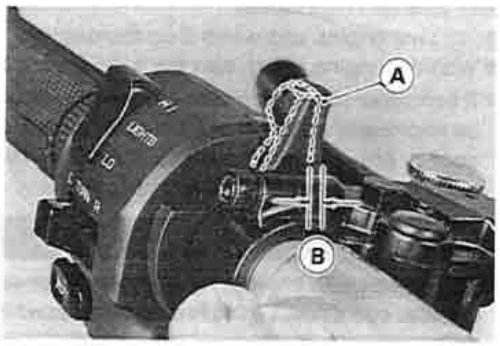

- Push the choke lever all the way to the front.
- Check choke cable free play [A].

○ Determine the amount of choke cable play at the choke lever. Pull the choke lever until the starter plunger lever [B] at the carburetor touches the starter plunger [C]; the amount of choke lever lower end travel is the amount of choke cable play.

★If the free play is incorrect, adjust the choke cable.

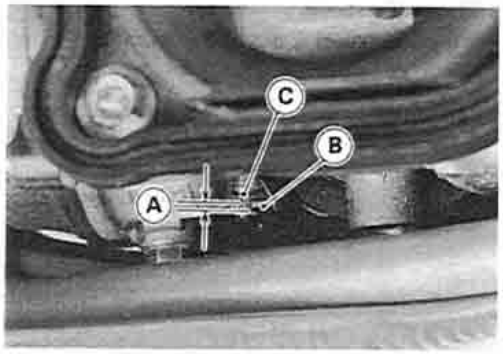

Choke Cable Free Play
Standard: 2 ~ 3 mm

Free Play Adjustment

- Remove the fuel tank and air cleaner housing (see Fuel Tank Removal and Air Cleaner Housing Removal).
- Loosen the locknut [A], and turn the adjuster [B] until the cable has the proper amount of free play.
- Tighten the locknut securely.

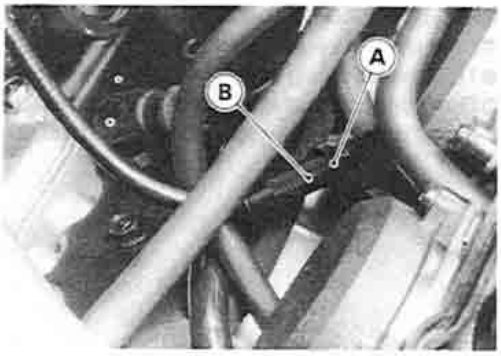

Cable Installation

- Install the choke cable in accordance with Cable Routing section in General Information chapter.
- After installation, adjust the cable properly.

Cable Lubrication

Whenever the choke cable is removed, lubricate the choke cable as follows:

- Apply a thin coating of grease to the cable upper end.
- Lubricate the cable with a penetrating rust inhibitor.

Special Tool – Pressure Cable Luber: k56019-021 [A]

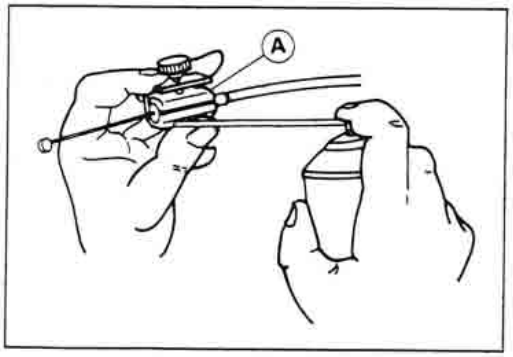

Carburetors

Idle Speed Inspection

- Start the engine and warm it up thoroughly.
- With the engine idling, turn the handlebar to both sides.

★If handlebar movement changes the idle speed, the throttle cables may be improperly adjusted or incorrectly routed, or damaged. Be sure to correct any of these conditions before riding (see Cable Routing section in General Information chapter).

⚠WARNING

Operation with improperly adjusted, incorrectly routed, or damaged cables could result in an unsafe riding condition.

- Check idle speed.

★If the idle speed is out of the specified range, adjust it.

Idle Speed
Standard: **1,100 ± 50 r/min (rpm)**
(Swiss Model)
1,300 ± 50 r/min (rpm)

Idle Speed Adjustment

- Start the engine and warm it up thoroughly.
- Turn the adjusting screw [A] until the idle speed is correct.

○ Open and close the throttle a few times to make sure that the idle speed is within the specified range. Readjust if necessary.

Synchronization Inspection

- Start the engine and warm it up thoroughly.
- Check idle speed (see Idle Speed Inspection).
- Remove the fuel tank (see Fuel Tank Removal).
- Supply fuel to the carburetors with an auxiliary fuel tank.
- Remove the air cleaner housing (see Air Cleaner Housing Removal).
- Remove the carburetors from the carburetor holders.
- Connect the vacuum gauge hoses [A] to the fittings on the carburetor holders.
- Install the carburetors and air cleaner housing.

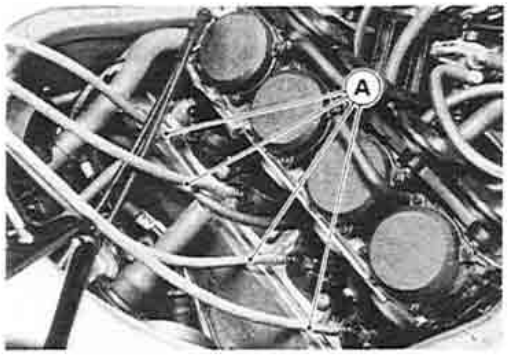

- Connect the vacuum gauge hoses to the vacuum gauge [A].

Special Tool – Vacuum Gauge: 57001-1369

- Start the engine and let it idle to measure the carburetor intake vacuum.

★If the vacuum is incorrect, adjust the synchronization.

Carburetor Synchronization Vacuum
Standard: **Less than 2.7 kPa (2 cmHg) difference between any two carburetors.**

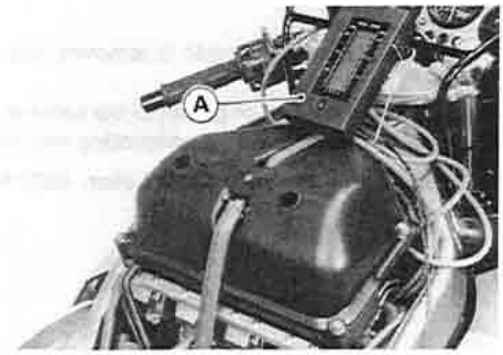

Synchronization Adjustment

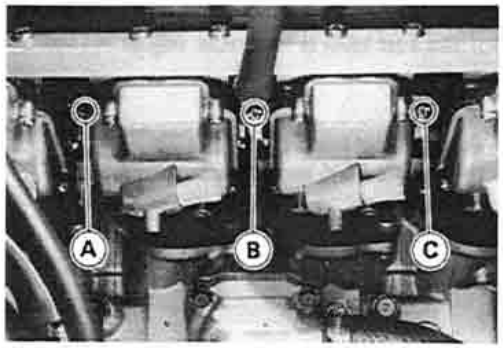

- Turn the adjusting screw to synchronize the carburetors.
  - ○ First synchronize the left two and then the right two carburetors by means of the left and right adjusting screws [A, C]. Then synchronize the left two carburetors and the right two carburetors using the center adjusting screw [B].
  - ★ If the carburetor synchronization cannot be obtained by using the adjusting screws, check for dirt or blockage, and then check the pilot screw settings.

Special Tools – (as required)
Pilot Screw Adjuster, C: 57001-1292
Pilot Screw Adjuster Adapter, Φ5: 57001-1372
Pilot Screw Adjuster Driver: 57001-1373

- Check the carburetor synchronization again.

NOTE

○ *Do not turn the pilot screws carelessly during carburetor synchronization. You may cause poor running at low engine speed.*

- Check idle speed.

Service Fuel Level Inspection

⚠WARNING

Gasoline is extremely flammable and can be explosive under certain conditions. Turn the ignition switch OFF. Do not smoke. Make sure the area is well-ventilated and free from any source of flame or sparks; this includes any appliance with a pilot light.

- Situate the motorcycle so that it is perpendicular to the ground.
- Remove the fuel tank (see Fuel Tank Removal).
- Prepare an auxiliary fuel tank and connect the fuel hose to the carburetors.
- Prepare a fuel hose (6 mm in diameter and about 300 mm long).
- Connect the fuel level gauge [A] to the carburetor float bowl with the fuel hose.

Special Tool – Fuel Level Gauge: 57001-1017

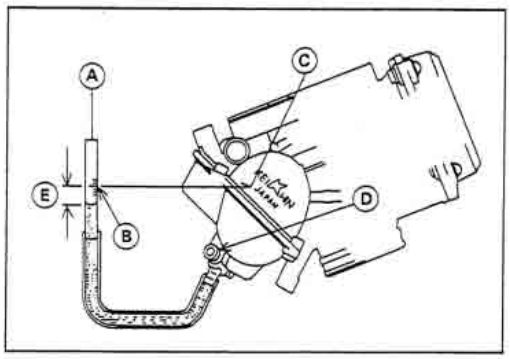

- Hold the gauge vertically against the side of the carburetor body so that the "zero" line [B] is several millimeters higher than the lower end [C] of the float level mark on the carburetor body.
- Feed fuel to the carburetor, then turn the carburetor drain plug [D] out a few turns.
- Wait until the fuel level in the gauge settles.
- Keeping the gauge vertical, align the "zero" line with the lower end of the float level mark.

NOTE

○ *Do not lower the "zero" line below the mark of the carburetor body. If the gauge is lowered and then raised again, the fuel level measured shows somewhat higher than the actual fuel level. If the gauge is lowered too far, dump the fuel into a suitable container and start the procedure over again.*

- Read the fuel level [E] in the gauge and compare to the specification.
- Screw in the carburetor drain plug.

●Stop feeding and remove the fuel level gauge.

★If the fuel level is incorrect, adjust it (see Service Fuel Level Adjustment).

Service Fuel Level
(below the mark on the carburetor body)
Standard: 9 ±1 mm

Service Fuel Level Adjustment

⚠WARNING

Gasoline is extremely flammable and can be explosive under certain conditions. Turn the ignition switch OFF. Do not smoke. Make sure the area is well-ventilated and free from any source of flame or sparks; this includes any appliance with a pilot light.

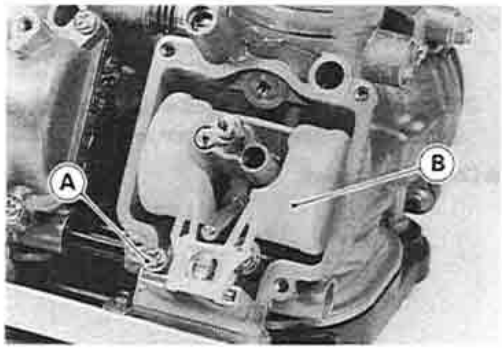

●Remove the carburetor, and drain the fuel into a suitable container.
●Remove the float bowl.
●Remove the screw [A] and take out the float [B].

●Bend the tang [A] on the float arm very slightly to change the float height. Increasing the float height lowers the fuel level and decreasing the float height raises the fuel level.

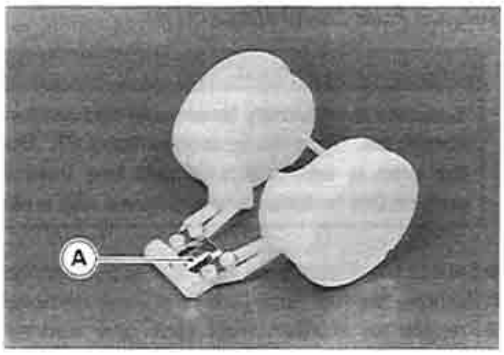

Float Height
Standard: 17 ± 2 mm

NOTE

○*Do not push the needle rod [A] in during the float height measurement [B].*

●Assemble the carburetor, and recheck the fuel level.

★If the fuel level cannot be adjusted by this method, the float or the float valve [C] is damaged.

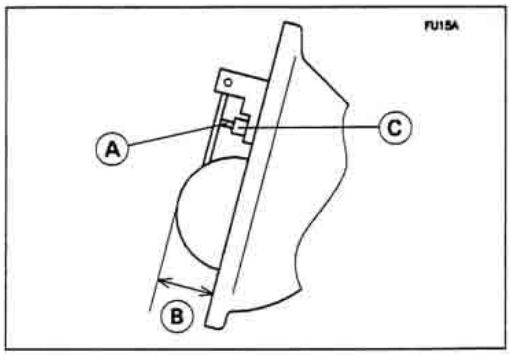

Fuel System Cleanliness Inspection

⚠WARNING

Gasoline is extremely flammable and can be explosive under certain conditions. Turn the ignition switch OFF. Do not smoke. Make sure the area is well-ventilated and free from any source of flame or sparks; this includes any appliance with a pilot light.

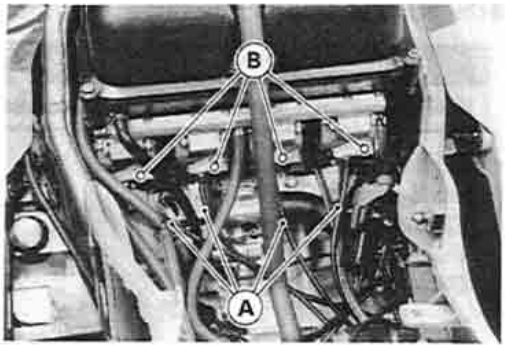

- Remove the fuel tank (see Fuel Tank Removal)
- Connect a suitable hose [A] to the fitting at the bottom of each carburetor float bowl.
- Run the lower ends of the hoses into a suitable container.
- Turn out each drain plug [B] a few turns and drain the float bowls.

Special Tool – Carburetor Drain Plug Wrench, Hex 3: 57001-1269

- Check to see if water or dirt comes out.
- Tighten the drain plugs.

★If any water or dirt appears during the above inspection, clean the fuel system (see Carburetor Cleaning and Fuel Tank Cleaning).

Carburetor Removal

⚠WARNING

Gasoline is extremely flammable and can be explosive under certain conditions. Turn the ignition switch OFF. Do not smoke. Make sure the area is well-ventilated and free from any source of flame or sparks; this includes any appliance with a pilot light.

- Remove:
  - Seats (see Frame chapter)
  - Fuel Tank (see Fuel Tank Removal)
  - Air Cleaner Housing (see Air Cleaner Housing Removal)
  - Choke Cable
  - Vacuum Valve
  - Fuel Hose
- Loosen the carburetor clamp screws [A], and remove the carburetors.
- Remove the throttle cable ends.
- Stuff pieces of lint-free, clean cloth into the carburetor holders to keep dirt out of the engine.

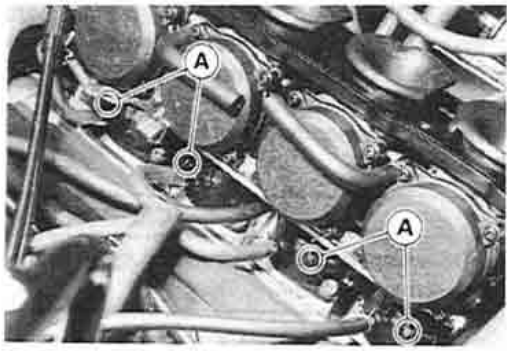

Carburetor Installation

- Route the cables, harness, and hoses correctly (see General Information chapter).
- Tighten the clamps for the carburetor holders at the position in the figure.

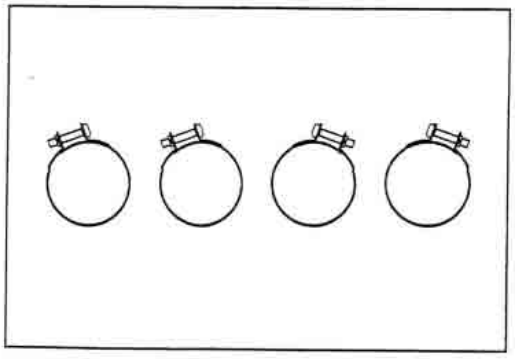

- Check fuel leakage from the carburetors.

⚠WARNING

Fuel spilled from the carburetors is hazardous.

- Adjust the following items if necessary.
  Idle Speed
  Carburetor Synchronization
  Throttle Cables
  Choke Cable

Carburetor Disassembly/Assembly

⚠WARNING

Gasoline is extremely flammable and can be explosive under certain conditions. Turn the ignition switch OFF. Do not smoke. Make sure the area is well-ventilated and free from any source of flame or sparks; this includes any appliance with a pilot light.

- For the US and Swiss models, remove the pilot screw plug as follows:
  - Punch a hole in the plug and pry there with an awl or other suitable tool.
- Turn in the pilot screw and count the number of turns until it seats fully but not tightly, and then remove the screw. This is to set the screw to its original position when assembling.
- After installing the upper chamber cover, check that the vacuum piston slides up and down smoothly without binding in the carburetor bore.

CAUTION

During carburetor disassembly, be careful not to damage the diaphragm. Never use a sharp edge to remove the diaphragm.

- Turn in the pilot screw [A] fully but not tightly, and then back it out the same number of turns counted during disassembly.
- For the US and Swiss models, install the pilot screw plug as follows:
  - Install a new plug [B] in the pilot screw hole, and apply a small amount of a bonding agent [C] to the circumference of the plug to fix the plug.

CAUTION

Do not apply too much bonding agent to the plug or the pilot screw itself may be fixed.

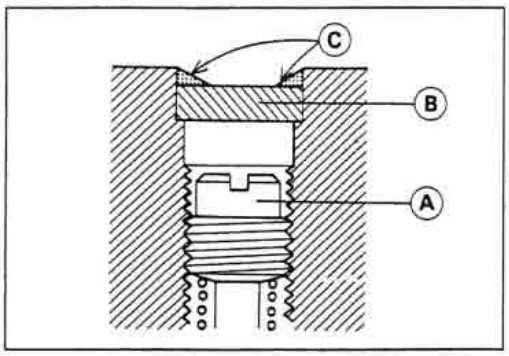

- Slip the needle through the hole in the center of the vacuum piston, and put the spring seat [A] on the top of the needle. Turn the seat so that it does not block the hole [B] at the bottom of the vacuum piston.

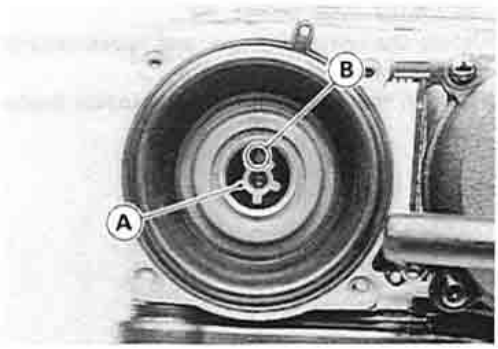

Carburetor Separation/Assembly

- Read the WARNING in Carburetor Disassembly/Assembly.
- The center lines of the carburetor bores must be parallel both horizontally and vertically. If they are not, loosen the mounting screws and align the carburetors on a flat surface. Retighten the mounting screws.
- After assembling the choke mechanism, check to see that the starter plunger lever slides right to left smoothly without abnormal friction.

CAUTION

Fuel mixture trouble could result if the starter plunger lever does not seat properly in its rest position after the choke lever is returned.

- Visually synchronize the throttle (butterfly) valves.
  - ○ Check to see that all throttle valves open and close smoothly without binding when turning the pulley.
  - ○ Visually check the clearance [A] between the throttle valve and the carburetor bore in each carburetor.
  - ★ If there is a difference between any two carburetors, turn the balance adjusting screw(s) [B] to obtain the same clearance.

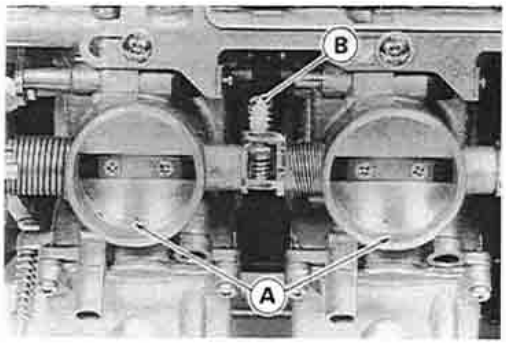

Carburetor Cleaning

⚠WARNING

Clean the carburetors in a well-ventilated area, and take care that there is no sparks or flame anywhere near the working area; this includes any appliance with a pilot light. Because of the danger of highly flammable liquids, do not use gasoline or low flash-point solvents to clean the carburetors.

CAUTION

Do not use compressed air on an assembled carburetor, or the floats may be crushed by the pressure, and the vacuum piston diaphragms may be damaged.
Remove as many rubber or plastic parts from the carburetor as possible before cleaning the carburetor with a cleaning solution. This will prevent damage to or deterioration of the parts.
The carburetor body has plastic parts that cannot be removed. Do not use a strong carburetor cleaning solution which could attack these parts; instead, use a mild high flash-point cleaning solution safe for plastic parts.
Do not use wire or any other hard instrument to clean carburetor parts, especially jets, as they may be damaged.

- Disassemble the carburetor.
- Immerse all the metal parts in a carburetor cleaning solution.
- Rinse the parts in water.
- When the parts are clean, dry them with compressed air.
- Blow through the air and fuel passages with compressed air.
- Assemble the carburetor.

Carburetor Inspection

⚠WARNING

Gasoline is extremely flammable and can be explosive under certain conditions. Turn the ignition switch OFF. Do not smoke. Make sure the area is well-ventilated and free from any source of flame or sparks; this includes any appliance with a pilot light.

- Remove the carburetors.
- Before disassembling the carburetors, check the fuel level (see Fuel Level Inspection).

★If the fuel level is incorrect, inspect the rest of the carburetor before correcting it.

- Move the starter plunger lever to the left and release it to check that the starter plungers move smoothly and return by spring tension.

★If the starter plungers do not work properly, replace the carburetors.

- Turn the throttle cable pulley to check that the throttle butterfly valves [A] move smoothly and return by spring tension.

★If the throttle valves do not move smoothly, replace the carburetors.

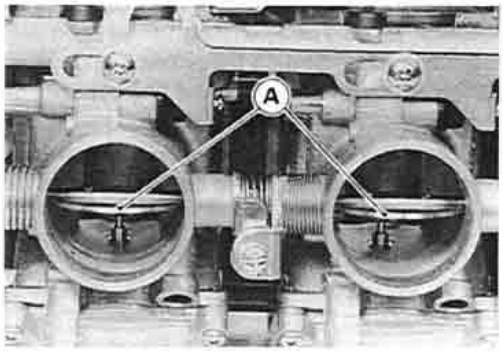

- Disassemble the carburetors.
- Clean the carburetors.
- Check that the O-rings on the float bowl and pilot screw and the diaphragm on the vacuum piston are in good condition.

★If any of the O-rings or diaphragms are not in good condition, replace them.

- Check the plastic tip [A] of the float valve needle [B]. It should be smooth, without any grooves, scratches, or tears.

★If the plastic tip is damaged [C], replace the needle.

- Push the rod [D] in the other end of the float valve needle, and then release it.

★If the rod does not spring out, replace the needle.

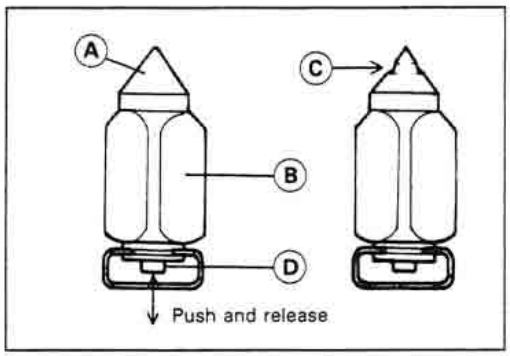

- Check the tapered portion [A] of the pilot screw [B] for wear or damage.

★If the pilot screw is worn or damaged on the tapered portion, it will prevent the engine from idling smoothly. Replace it.

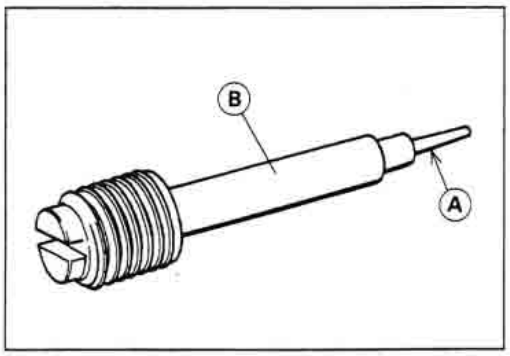

- Check that the vacuum piston [A] moves smoothly in the carburetor body. The surface of the piston must not be excessively worn.

★If the vacuum piston does not move smoothly, or if it is very loose in carburetor body, replace the carburetor.

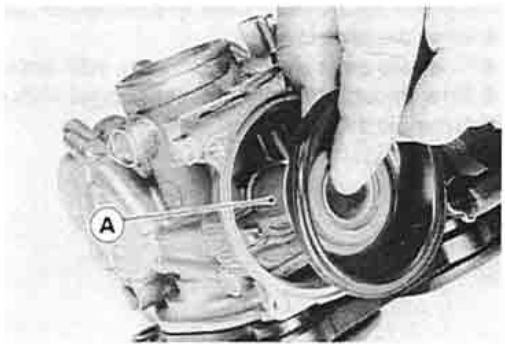

Coolant Filter Cleaning (AR, FG, FR, IT, KR, NL, ST, UK Models)

Before winter season starts, clean the filter of carburetor system.

- Remove the fuel tank (see Fuel Tank Removal).
- Drain the coolant (see Cooling System chapter).
- Remove the filter [A] from the cooling hoses [B] of carburetor system.
- Blow off dirt and sediment on the filter with compressed air.

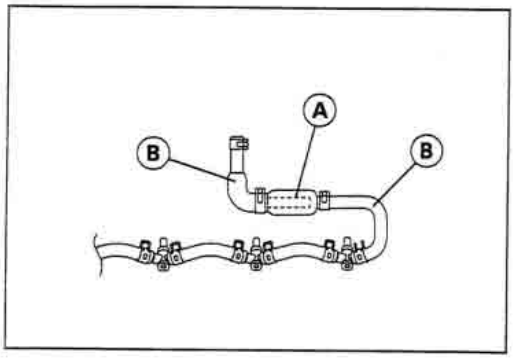

Air Cleaner

Air Cleaner Housing Removal

- Remove:
  - Seats (see Frame chapter)
  - Fuel Tank (see Fuel Tank Removal)
  - Engine Breather Hose [A]
  - Vacuum Valve Hose [B]
  - Drain Hose [C]
  - Rubber Plugs [D]

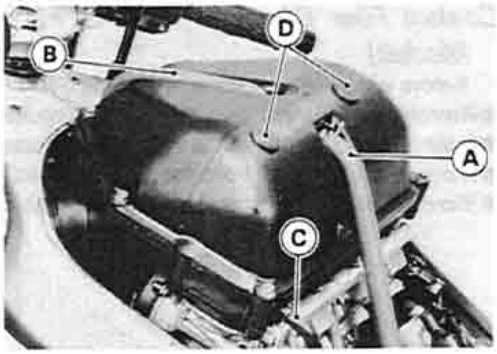

  - Mounting Bolts [A]
  - Air Cleaner Housing [B]

○ Pull up the rear of the housing, and then remove it from the air ducts.

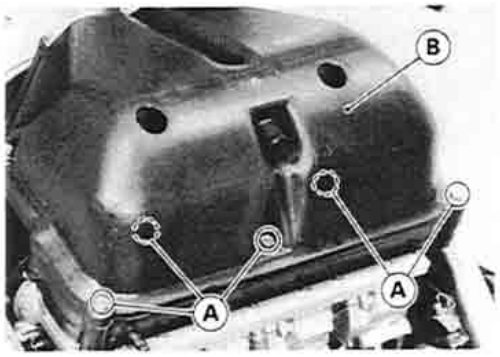

Air Cleaner Housing Installation

- Remove the inner fairing.
- Pull the air ducts toward the front until its rear end [A] align the inside surface of the frame [B].
- Tighten the housing mounting bolts.
- Insert the air duct into the housing securely while pushing down [C] the front of the housing.

★If the procedure is hard, remove the air cleaner upper housing and element.

- Be sure to fit the following hoses.
  - Engine Breather Hose
  - Vacuum Valve Hose
  - Air Cleaner Drain Hose
- Install the rubber plugs in place.

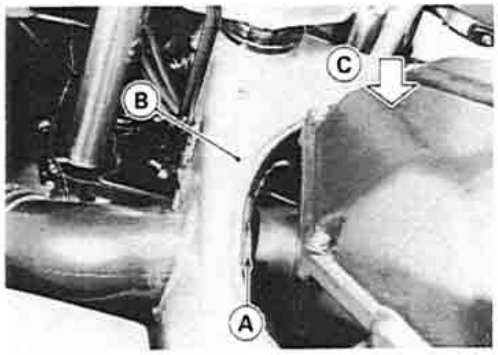

Element Removal

- Remove:
  - Seats (see Frame chapter)
  - Fuel Tank (see Fuel Tank Removal)
  - Engine Breather Hose [A]
  - Vacuum Valve Hose [B]
  - Upper Housing Mounting Bolts [C]
  - Upper Housing [D]
  - Element

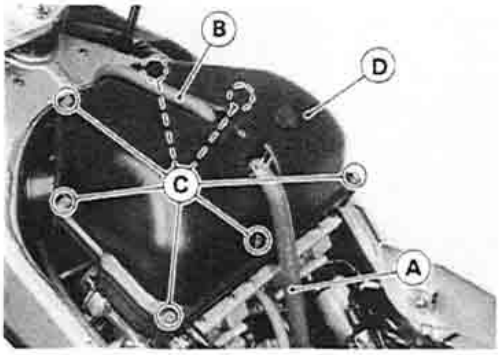

Element Installation

- Install the element [A] with the foam element side (gray) facing up.

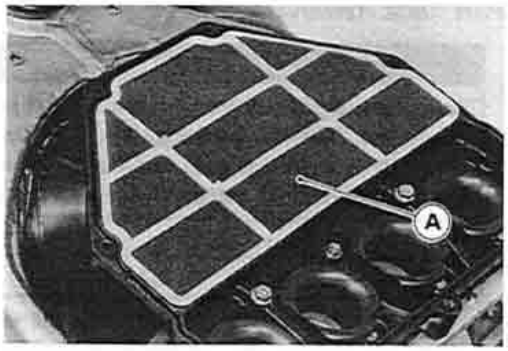

Element Cleaning and Inspection

⚠WARNING

Clean the element in a well-ventilated area, and make sure that there are no sparks or flame anywhere near the working area.
Because of the danger of highly flammable liquids, do not use gasoline or a low flash-point solvent to clean the element.

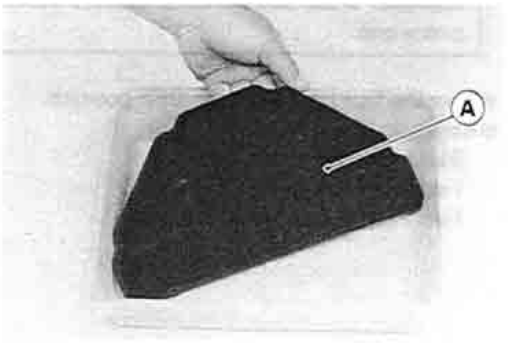

- Remove the air cleaner element [A] (see Element Removal).
- Clean the element in a bath of high flash-point solvent, and then dry it with compressed air or by shaking it.
- After cleaning, saturate a clean, lint-free towel with SE, SF, or SG class SAE 30 oil and apply the oil to the element by tapping the element outside with the towel.
- Visually check the element for tears or breaks.

★If the element has any tears or breaks, replace the element.

Oil Draining

A drain hose [A] is connected to the bottom of the air cleaner housing, to drain water or oil accumulated in the housing.

- Visually check the catch tank [B] of the rear drain hose if the water or oil accumulates in the tank.

★If any water or oil accumulates in the tank, drain it by taking off the drain plugs [C] at the lower end of the front and rear drain hoses.

⚠WARNING

Be sure to reinstall the plug in the drain hose after draining. Oil on tires will make them slippery and can cause an accident and injury.

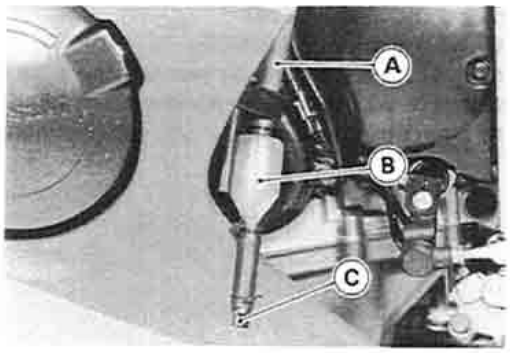

Fuel Tank

Fuel Tank Removal

⚠WARNING

Gasoline is extremely flammable and can be explosive under certain conditions. Turn the ignition switch OFF. Do not smoke. Make sure the area is well-ventilated and free from any source of flame or sparks; this includes any appliance with a pilot light.

CAUTION

For California model, if gasoline, solvent, water or any other liquid enters the canister, the canister's vapor absorbing capacity is greatly reduced. If the canister does become contaminated, replace it with a new one.

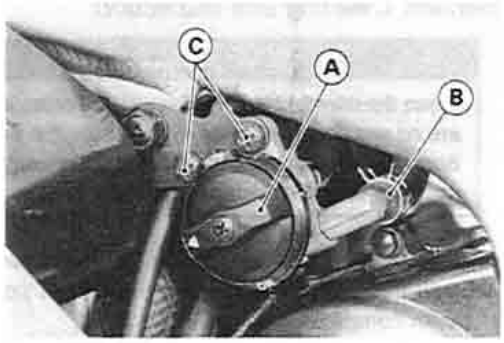

- Turn the fuel tap [A] to the OFF position.
- Remove:
  Seats (see Frame chapter)
  Fuel Filter Hose [B]
  Fuel Tap Mounting Screws [C]

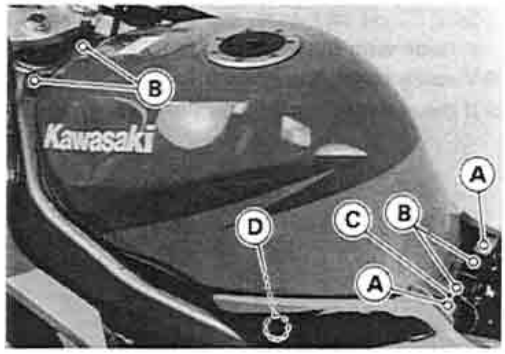

- Remove:
  Mounting Screws [A]
  Mounting Bolts [B]
  Bracket [C]
  Evaporative Emission Hoses (California model)
- Pull the front part of the side covers outward to clear the stoppers [D], and then remove the fuel tank.

Fuel Tank Installation

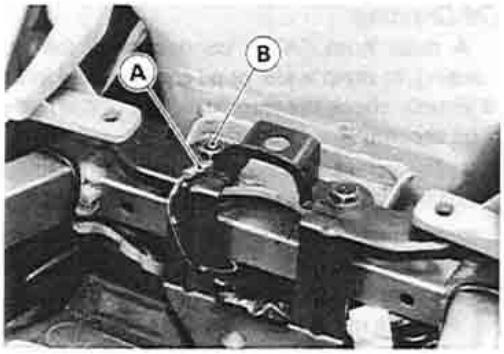

- Read the above WARNING.
- Route the hoses correctly (see General Information chapter).
- Be sure the hoses are clamped securely to prevent leaks.
- Fasten the ground terminal [A] with mounting bolt [B].

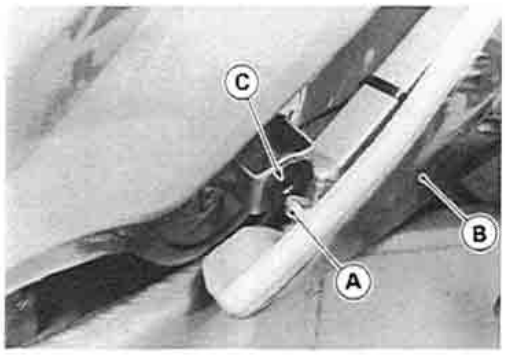

- Fit the projection [A] on the side cover [B] into the hole of the damper [C].

Fuel Tank Inspection

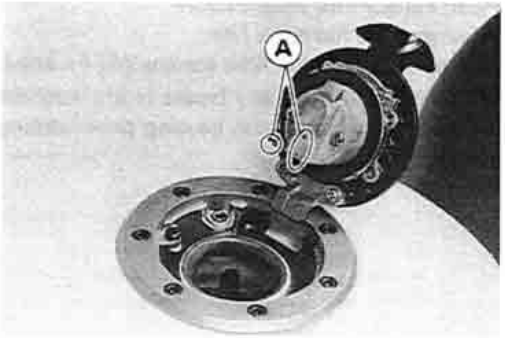

- Remove the hose(s) from the fuel tank, and open the tank cap.
- Check to see if the breather pipe (also the fuel return pipe for the California model) in the tank is not clogged. Check the tank cap breather also.

★If they are clogged, remove the tank and drain it, and then blow the breather free with compressed air.

CAUTION
Do not apply compressed air to the air vent holes [A] in the tank cap. This could cause damage and clogging of the labyrinth in the cap.

Fuel Tank Cleaning

⚠WARNING
Clean the tank in a well-ventilated area, and take care that there are no sparks or flame anywhere near the working area. Because of the danger of highly flammable liquids, do not use gasoline or low flash-point solvents to clean the tank.

- Remove the fuel tank and drain it.
- Pour some high flash-point solvent into the fuel tank and shake the tank to remove dirt and fuel deposits.
- Pour high flash-point solvent through the tap in all lever positions.
- Pour the solvent out of the tank.
- Remove the fuel tank filters from the tank (see Fuel Tank Filter Removal).
- Clean the fuel tank filter screens in a high flash-point solvent.
- Dry the tank and tank with compressed air.
- Install the tank filters in the tank.
- Install the fuel tank (see Fuel Tank Installation).

Fuel Tank Filter Removal

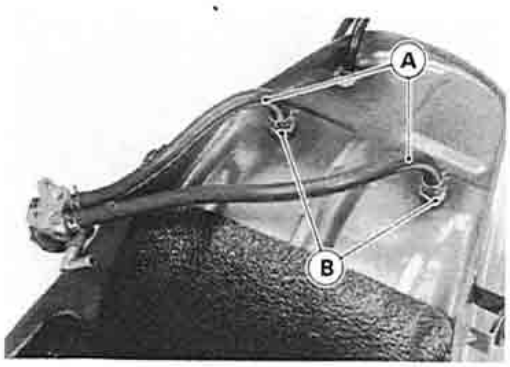

- Remove the fuel tank and drain it.
- Remove:
  Fuel Hoses [A]
  Fuel Tank Filter [B]

Fuel Tank Filter Installation

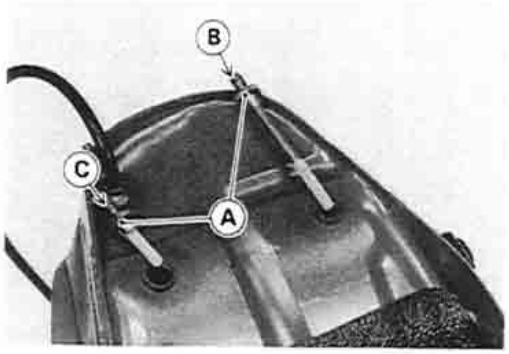

- Be sure the O-rings [A] is in good condition to prevent leaks.
- Be sure to clamp the fuel hoses to the tap to prevent leaks.
  [B] ON Hose (Yellow Mark)
  [C] RES Hose (White Mark)

Fuel Tank Filter Inspection

- Remove the fuel tank filter.
- Check the fuel tank filter screens [A] for any breaks or deterioration.

★If the screens have any breaks or are deteriorated, they may allow dirt to reach the carburetor, causing poor running. Replace the fuel tank filter.

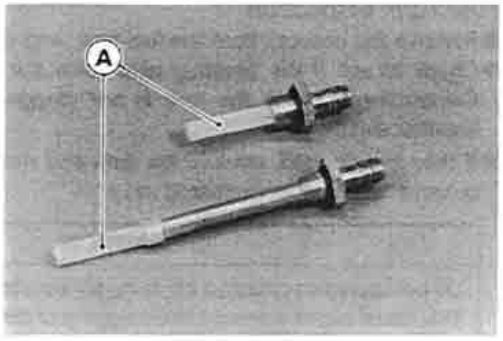

Fuel Pump, Fuel Filter

Fuel Pump, Fuel Filter Removal

⚠WARNING

Gasoline is extremely flammable and can be explosive under certain conditions. Turn the ignition switch OFF. Do not smoke. Make sure the area is well-ventilated and free from any source of flame or sparks; this includes any appliance with a pilot light.

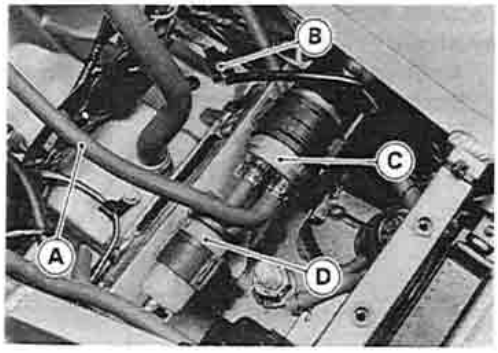

- Remove:
  - Seats (see Frame chapter)
  - Fuel Tank (see Fuel Tank Removal)
  - Fuel Hose [A]
  - Fuel Pump Lead Connector [B]
- Remove the fuel pump [C] and fuel filter [D] from the bracket.

Fuel Pump, Fuel Filter Installation

- Install the fuel filter so that the arrow [A] on it shows the fuel flow from the fuel tank to the fuel pump.
- Be sure to route the hoses so that they will not be kinked or stretched.

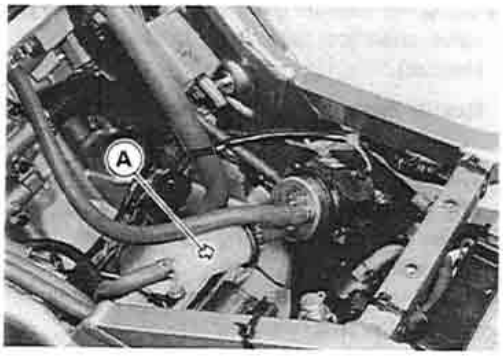

Fuel Pump Inspection

- Refer to Electrical System chapter.

Fuel Filter Inspection

- Remove:
  - Seats (see Frame chapter)
  - Fuel Tank (see Fuel Tank Removal)
- Visually inspect the fuel filter.

★If the filter is clear with no signs of dirt or other contamination, it is OK and need not be replaced.

★If the filter is dark or looks dirty, replace with a new one. Also, check the rest of the fuel system for contamination.

Vacuum Valve

Vacuum Valve Inspection

● Remove:
Air Cleaner Housing (see Air Cleaner Housing Removal)
Bracket [A] and Vacuum Valve [B]
Vacuum Valve Hoses [C]

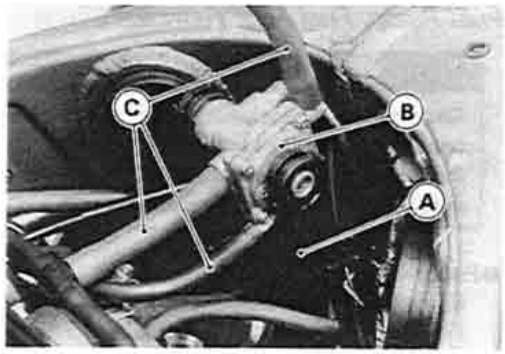

● Remove the drain screw [A] from the bottom of the chamber [B].
★ If any liquid accumulates in the chamber, drain it.

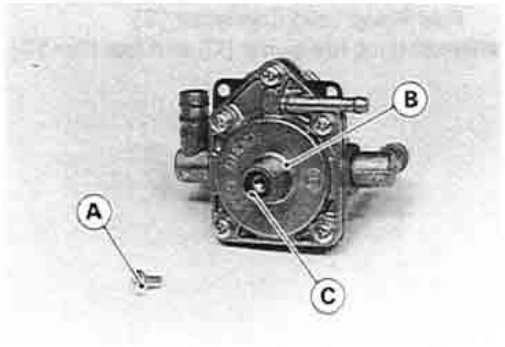

⚠WARNING

The liquid may contain gasoline.

● Replace the O-ring [C] with a new one.
● After draining, install the drain screw with the O-ring.

Torque – Vacuum Valve Drain Screw: 1.0 N-m (0.10 kg-m, 9 in-lb)

● Using the vacuum gauge and fork oil level gauge, inspect the vacuum valve operation (see Vacuum Switch Valve Test in Engine Top End chapter).

Special Tools – Vacuum Gauge: 57001-1369
Fork Oil Level Gauge: 57001-1290

○ When applying vacuum (1.5 cmHg) to the vacuum sensing fitting [A], air flows from pipe [B] to pipe [C], and vice versa.
○ When stopping applying vacuum, air flows from pipe [B] to pipe [D], and vice versa.
★ Nevertheless if the vacuum valve does not operate as described, replace it with a new one.

CAUTION

Do not use compressed air during the valve check, or the vacuum valve may be damaged.

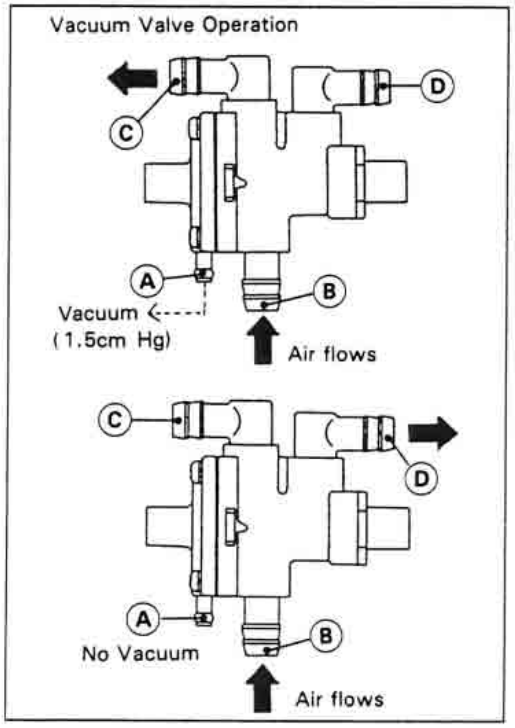

Evaporative Emission Control System (California Model Only)

The Evaporative Emission Control System routes fuel vapors from the fuel system into the running engine or stores the vapors in a canister when the engine is stopped. Although no adjustments are required, a thorough visual inspection must be made at the intervals specified by the Periodic Maintenance Chart.

Parts Removal/Installation

⚠WARNING

Gasoline is extremely flammable and can be explosive under certain conditions. Turn the ignition switch OFF. Do not smoke. Make sure the area is well-ventilated and free from any source of flame or sparks; this includes any appliance with a pilot light.

CAUTION

If gasoline, solvent, water or any other liquid enters the canister, the canister's vapor absorbing capacity is greatly reduced. If the canister does become contaminated, replace it with a new one.

- To prevent the gasoline from flowing into or out of the canister, hold the separator perpendicular to the ground.
- Connect the hoses according to the diagram of the system. Make sure they do not get pinched or kinked.

Hose Inspection

- Check that the hoses are securely connected.
- Replace any kinked, deteriorated or damaged hoses.

Separator Inspection

- Disconnect the hoses from the liquid/vapor separator, and remove the separator from the motorcycle.
- Visually inspect the separator for cracks and other damage.

★If the separator has any cracks or is badly damaged, replace it with a new one.

Separator Operation Test

⚠WARNING

Gasoline is extremely flammable and can be explosive under certain conditions. Turn the ignition switch OFF. Do not smoke. Make sure the area is well-ventilated and free from any source of flame or sparks; this includes any appliance with a pilot light.

- Connect the hoses to the separator, and install the separator on the motorcycle.

- Disconnect the breather hose from the separator, and inject about 20 mL of gasoline into the separator through the hose fitting.
- Disconnect the fuel return hose from the fuel tank.
- Run the open end of the return hose into the container and hold it level with the tank top.
- Start the engine, and let it idle.

★If the gasoline in the separator comes out of the hose, the separator works well. If it does not, replace the separator with a new one.

Canister Inspection

- Remove the canister, and disconnect the hoses from the canister.
- Visually inspect the canister for cracks and other damage.

★If the canister has any cracks or bad damage, replace it with a new one.

NOTE

○*The canister is designed to work well through the motorcycle's life without any maintenance if it is used under normal conditions.*

Cooling System

3

Table of Contents

Exploded View

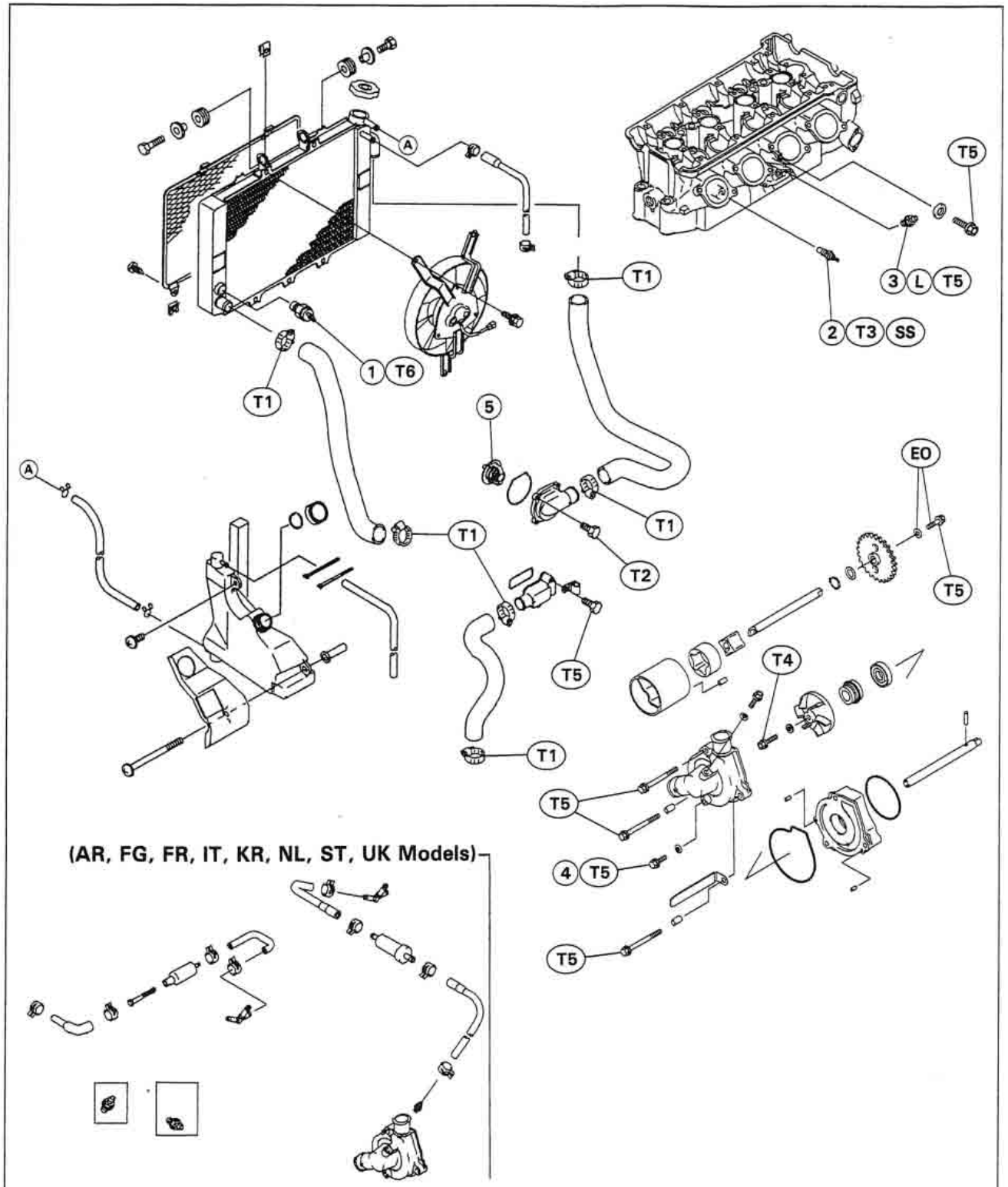

1. Radiator Fan Switch
2. Water Temperature Sensor
3. Coolant By-pass Fitting
4. Drain Plug
5. Thermostat

EO: Apply engine oil.
SS: Apply silicone sealant.
T1: 2.0 N-m (0.20 kg-m, 17 in-lb)
T2: 6.9 N-m (0.70 kg-m, 61 in-lb)
T3: 7.8 N-m (0.80 kg-m, 69 in-lb)
T4: 9.8 N-m (1.0 kg-m, 87 in-lb)
T5: 12 N-m (1.2 kg-m, 104 in-lb)
T6: 18 N-m (1.8 kg-m, 13.0 ft-lb)

Coolant Flow Chart

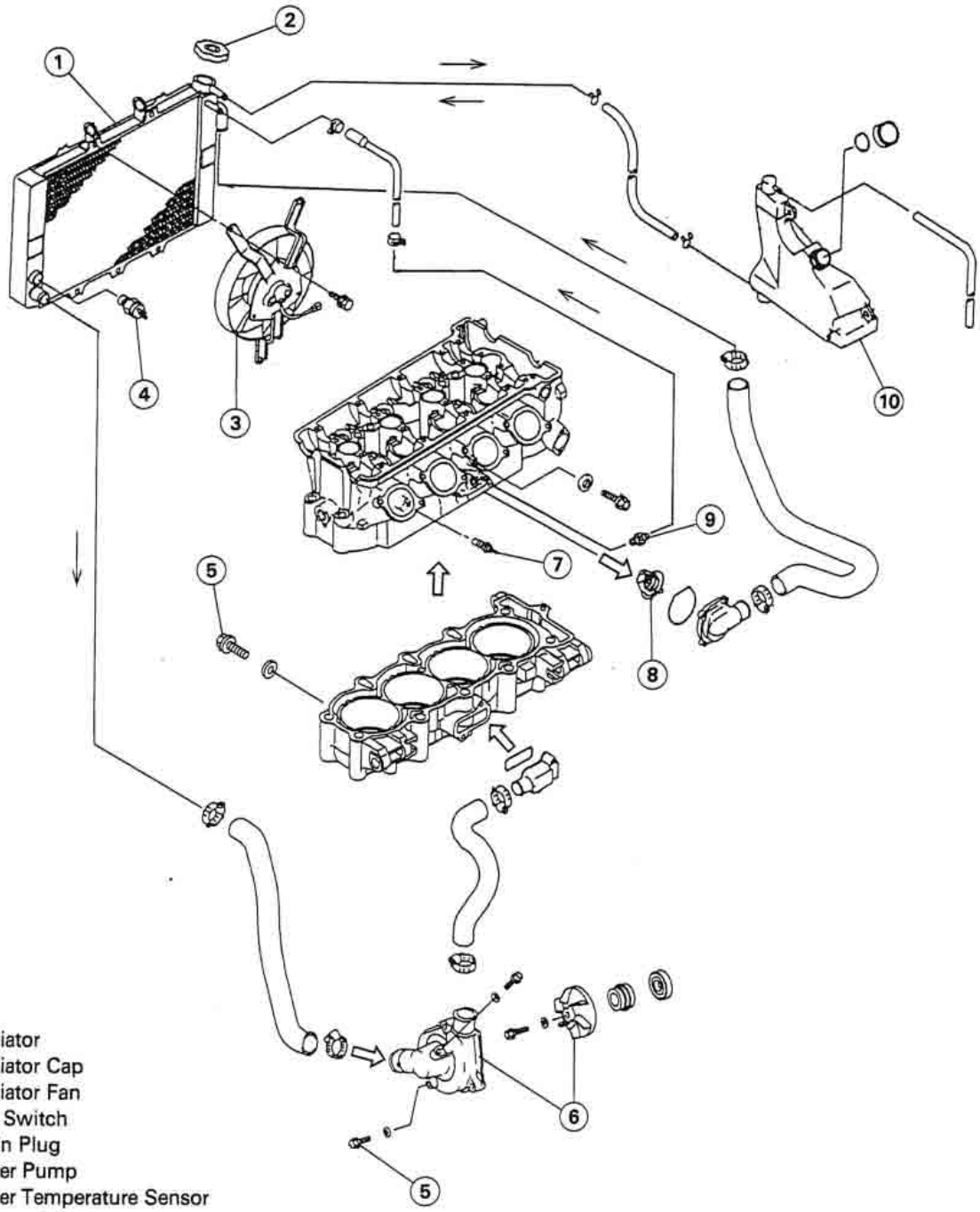

1. Radiator
2. Radiator Cap
3. Radiator Fan
4. Fan Switch
5. Drain Plug
6. Water Pump
7. Water Temperature Sensor
8. Thermostat
   When the engine is cold, the thermostat is closed so that the coolant flow is restricted through the air bleeder hole, causing the engine to warm up more quickly.
9. By-pass Fitting
   The fitting is installed to bleed the air.
10. Reserve Tank
    When the engine is very hot, the pressure valve in the radiator cap allows air and vapor to escape into the reserve tank. When the engine cools down, the pressure drop draws the vacuum valve (another small valve) open, admitting coolant from the reserve tank into the radiator.

Specifications

Item		Standard
Coolant provided when shipping:		
	Type	Permanent type of antifreeze (soft water and ethylene glycol plus corrosion and rust inhibitor chemicals for aluminum engines and radiators)
	Color	Green
	Mixed ratio	Soft water 50%, coolant 50%
	Freezing point	−35°C (−31°F)
	Total amount	2.7L (reserve tank full level including radiator and engine)
Radiator cap	Relief pressure:	93 ~ 123 kPa (0.95 ~ 1.25 kg/cm², 14 ~ 18 psi)
Thermostat:		
	Valve opening temperature	58 ~ 62°C (136 ~ 144 °F)
	Valve full opening lift	8mm or more @95°C (203 °F)

Sealant – Kawasaki Bond (Silicone Sealant): 56019-120

Coolant

Coolant Level Inspection

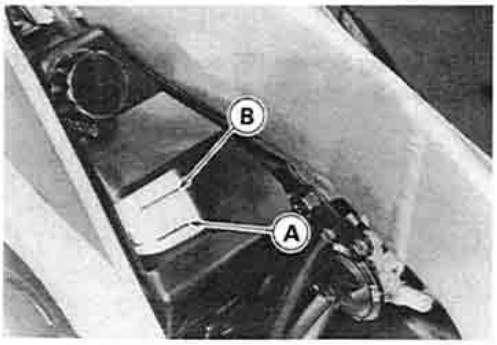

NOTE

○ *Check the level when the engine is cold (room or ambient temperature).*

● Check the coolant level in the reserve tank with the motorcycle held perpendicular.

★ If the coolant level is lower than the "L" (Low) level line [A], add coolant to the "F" (Full) level line [B].

CAUTION

For refilling, add the specified mixture of coolant and soft water. Adding water alone dilutes the coolant and degrades its anticorrosion properties. The diluted coolant can attack the aluminum engine parts. In an emergency, soft water alone can be added. But the diluted coolant must be returned to the correct mixture ratio within a few days.
If coolant must be added often, or the reservoir tank has run completely dry; there is probably leakage in the cooling system. Check the system for leaks.

Coolant Draining

⚠WARNING

To avoid burns, do not remove the radiator cap or try to change the coolant when the engine is still hot. Wait until it cools down.
Coolant on tires will make them slippery and can cause an accident and injury. Immediately wipe up or wash away any coolant that spills on the frame, engine, or other painted parts.
Since coolant is harmful to the human body, do not use for drinking.

● Remove:
Right Inner Fairing and Lower Fairings (see Frame chapter)
Radiator Cap [A]

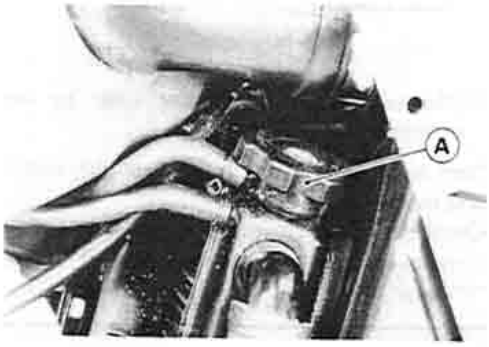

● Place a container under the drain plug [A] at the bottom of the water pump cover [B].
● Drain the coolant from the radiator and engine by removing the drain plug.

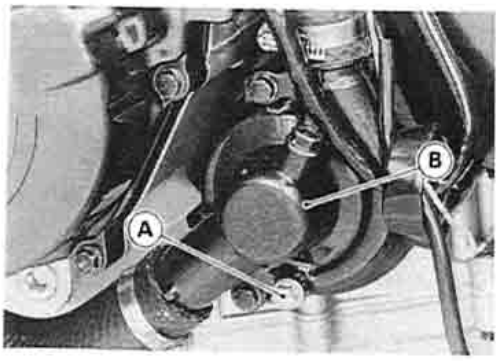

- Remove:
  Hose [A]
  Mounting Screws [B] and Reserve Tank [C]
- Remove the cap [D] and pour the coolant into a container.

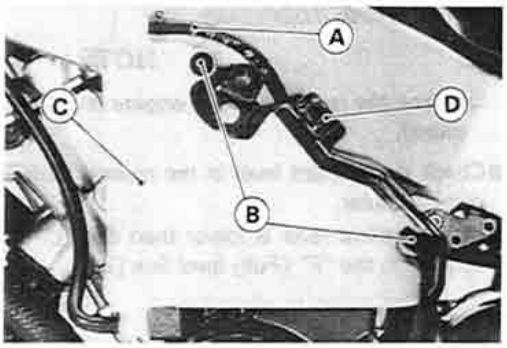

Coolant Filling

- Tighten the drain plug.

Torque – Drain Plug: 12 N-m (1.2 kg-m, 104 in-lb)

- Fill the radiator up to the radiator filler neck [A] with coolant, and install the radiator cap.

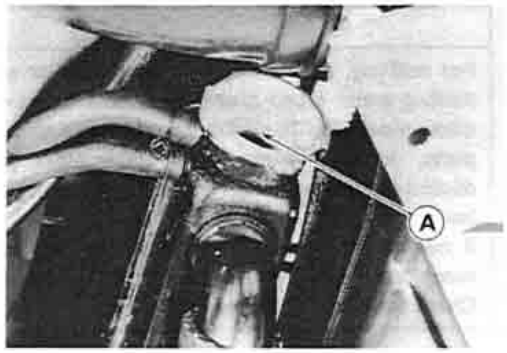

NOTE

○ *Pour in the coolant slowly so that it can expel the air from the engine and radiator.*

- Fill the reserve tank up to the "F" level line with coolant, and install the cap.

CAUTION
Soft or distilled water must be used with the antifreeze (see below for antifreeze) in the cooling system. **If hard water is used in the system, it causes scales accumulation in the water passages, and considerably reduces the efficiency of the cooling system.**

Water and Coolant Mixture Ratio (Recommended)

Soft Water	:	**50%**
Coolant	:	**50%**
Freezing Point	:	**−35°C (−31°F)**
Total Amount	:	**2.7 L**

NOTE

○ *Choose a suitable mixture ratio by referring to the coolant manufacturer's directions.*

- Start the engine, warm it up thoroughly until the radiator fan turns on and then stop the engine.
- Check the coolant level in the reserve tank after the engine cools down.

★ If the coolant level is lower than the "L" level line, add coolant to the "F" level line.

CAUTION
Do not add more coolant above the "F" level line.

Pressure Testing

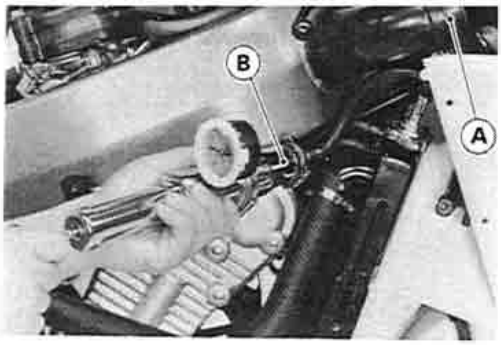

- Remove:
  Inner Fairing (see Frame chapter)
  Right Lower Fairing (see Frame chapter)
  Air Duct [A]
- Remove the radiator cap, and install a cooling system pressure tester [B] on the filler neck.

NOTE

○ *Wet the cap sealing surfaces with water or coolant to prevent pressure leaks.*

- Build up pressure in the system carefully until the pressure reaches 123 kPa (1.25 kg/cm², 18 psi).

CAUTION
During pressure testing, do not exceed the pressure for which the system is designed. The maximum pressure is 123 kPa (1.25 kg/cm², 18 psi).

- Watch the gauge for at least 6 seconds.

★If the pressure holds steady, the system is all right.

★If the pressure drops soon, check for leaks.

Water Pump

Water Pump Removal

- Refer to Oil Pump Removal in Engine Lubrication System chapter.

Water Pump Installation

- Refer to Oil Pump Installation in Engine Lubrication System chapter.

Water Pump Inspection

- Check the drainage outlet passage [A] at the side of the water pump body for coolant leaks.

★If the mechanical seal is damaged, the coolant leaks through the seal and drains through the passage. Replace the water pump unit with a new one.

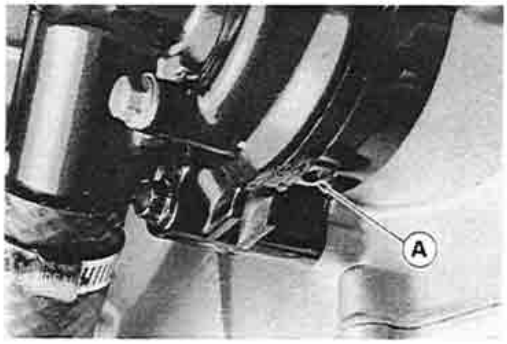

Radiator, Radiator Fan

Radiator, Radiator Fan Removal

⚠WARNING

The radiator fan is connected directly to the battery. The radiator fan may start even if the ignition switch is off. NEVER TOUCH THE RADIATOR FAN UNTIL THE RADIATOR FAN CONNECTOR IS DISCONNECTED. TOUCHING THE FAN BEFORE THE CONNECTOR IS DISCONNECTED COULD CAUSE INJURY FROM THE FAN BLADES.

● Remove:
- Seats (see Frame chapter)
- Fuel Tank and Air Cleaner Housing (see Fuel System chapter)
- Upper and Lower Fairings (see Frame chapter)
- Coolant (see Coolant Draining)
- Vacuum Valve
- Radiator Fan Connector [A]

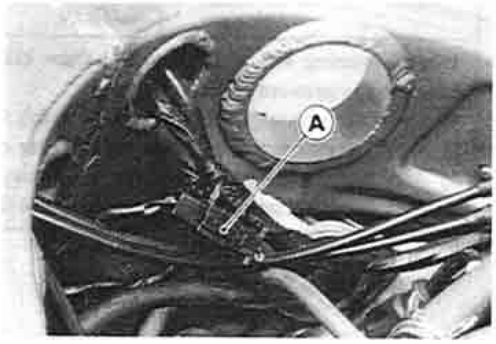

Radiator Hoses [A]

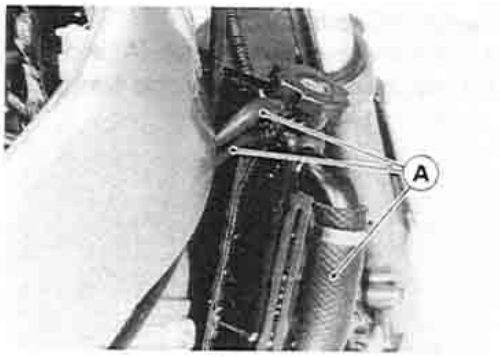

Fan Switch Lead Connectors [A]
Radiator Hose [B]
Radiator Mounting Bolts [C]
Radiator

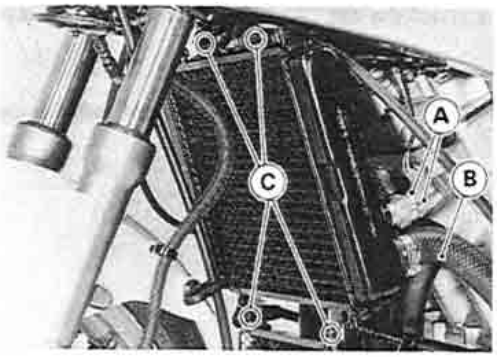

Radiator Fan Mounting Bolts [A]
Radiator Fan [B]

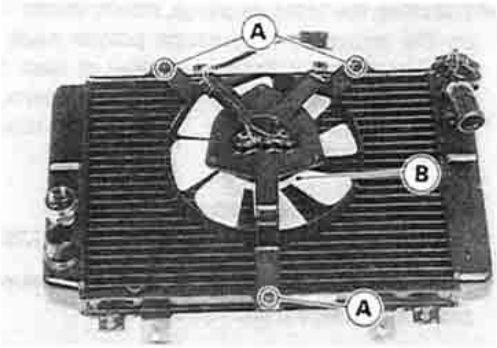

Radiator Inspection

- Check the radiator core.

★If there are obstructions to air flow, remove them.

★If the corrugated fins are deformed, carefully straighten them.

★If the air passages of the radiator core are blocked more than 20% by unremovable obstructions or irreparably deformed fins, replace the radiator with a new one.

CAUTION

When cleaning the radiator with steam cleaner, be careful of the following to prevent radiator damage.

1) Keep the steam gun away more than 0.5 m from the radiator core.
2) Hold the steam gun perpendicular to the core surface.
3) Run the steam gun vertically following the core fin direction. Running it horizontally may damage the fin.

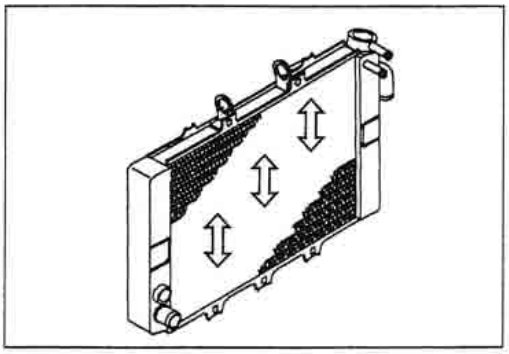

Radiator Cap Inspection

- Check the condition of the top [A] and bottom [B] valve seals.

★If any one of them shows visible damage, replace the cap with a new one.

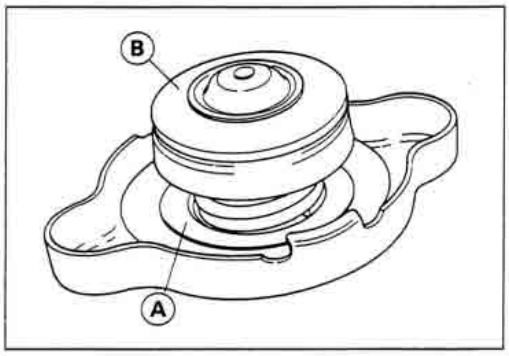

- Install the cap [A] on a cooling system pressure tester [B].

NOTE

○ *Wet the cap sealing surfaces with water or coolant to prevent pressure leaks.*

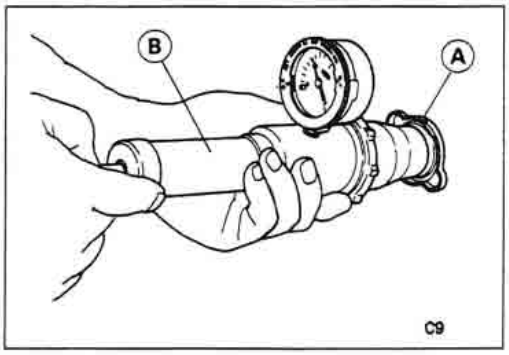

- Watching the pressure gauge, slowly pump the pressure tester to build up the pressure. The gauge pointer must remain within the relief pressure range in the table below at least 6 seconds. Continue to pump the tester until the relief valve opens, indicated by the gauge pointer flicks downward. The relief valve must open within the specified range.

Radiator Cap Relief Pressure

Standard: 93 ~ 123 kPa (0.95 ~ 1.25 kg/cm^2,14 ~ 18 psi)

★If the cap cannot hold the specified pressure, or if it holds too much pressure, replace it with a new one.

Thermostat

Thermostat Removal

- Remove:
  - Coolant (see Coolant Draining)
  - Seats (see Frame chapter)
  - Fuel Tank (see Fuel System chapter)
  - Thermostat Housing Cover Bolts [A]
  - Thermostat Housing Cover [B]
  - Thermostat

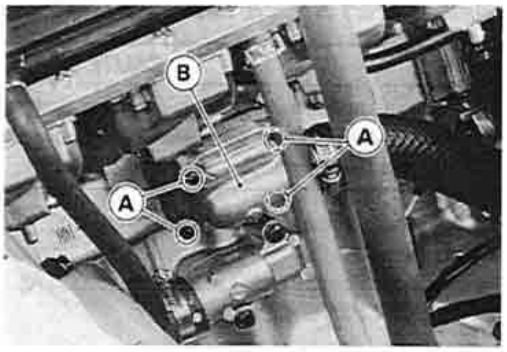

Thermostat Installation

- Be sure to install the O-ring [A] on the housing cover.
- Tighten the housing cover bolts.

Torque – Thermostat Housing Cover Bolts: 6.9 N-m (0.70 kg-m, 61 in-lb)

- Fill the radiator with coolant.

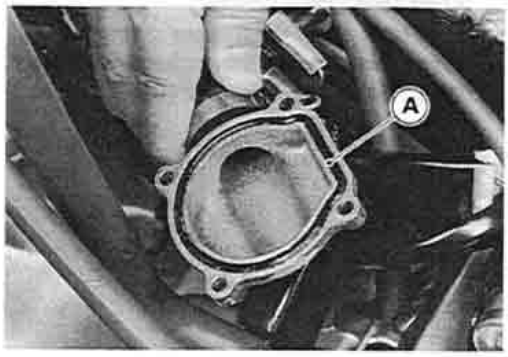

Thermostat Inspection

- Remove the thermostat, and inspect the thermostat valve [A] at room temperature.

★If the valve is open, replace the thermostat with a new one.

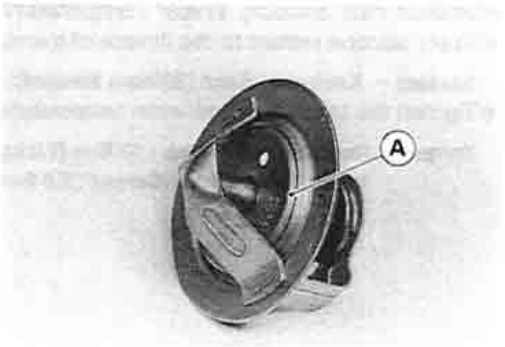

- To check valve opening temperature, suspend the thermostat [A] in a container of water and raise the temperature of the water.
  [B] Thermometer

★If the measurement is out of the specified range, replace the thermostat with a new one.

Thermostat Valve Opening Temperature
58 ~ 62°C (136 ~ 144°F)

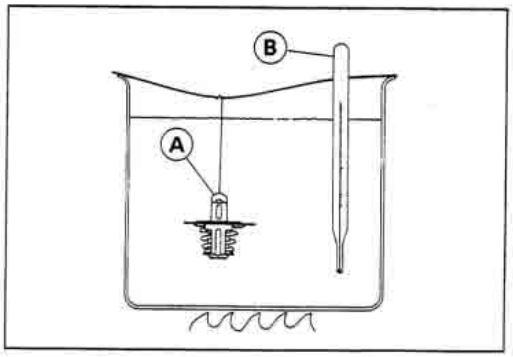

Radiator Fan Switch, Water Temperature Sensor

Radiator Fan Switch, Water Temperature Sensor Removal

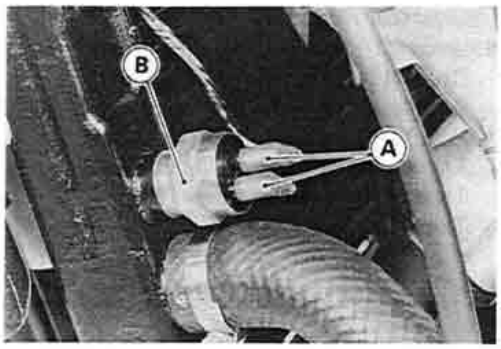

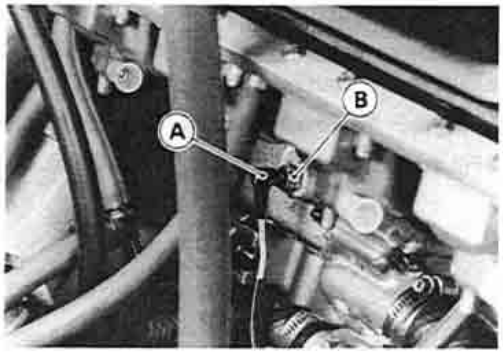

CAUTION
The fan switch or the water temperature sensor should never be allowed to fall on a hard surface. Such a shock to their parts can damage them.

- Drain the coolant (see Coolant Draining).
- Remove:
  Radiator Fan Switch Lead Connectors [A]
  Radiator Fan Switch [B]

  Seats (see Frame chapter)
  Fuel Tank (see Fuel System chapter)
  Water Temperature Sensor Lead Connector [A]
  Water Temperature Sensor [B]

Radiator Fan Switch, Water Temperature Sensor Installation

- Apply silicone sealant to the threads of the water temperature sensor.

Sealant – Kawasaki Bond (Silicone Sealant): 56019-120

- Tighten the fan switch and water temperature sensor.

Torque – Radiator Fan Switch : 18 N-m (1.8 kg-m, 13.0 ft-lb)
Water Temperature Sensor : 7.8 N-m (0.80 kg-m, 69 in-lb)

Radiator Fan Switch, Water Temperature Sensor Inspection

- Refer to Electrical System chapter for these inspections.

Engine Top End

4

Table of Contents

Exploded View

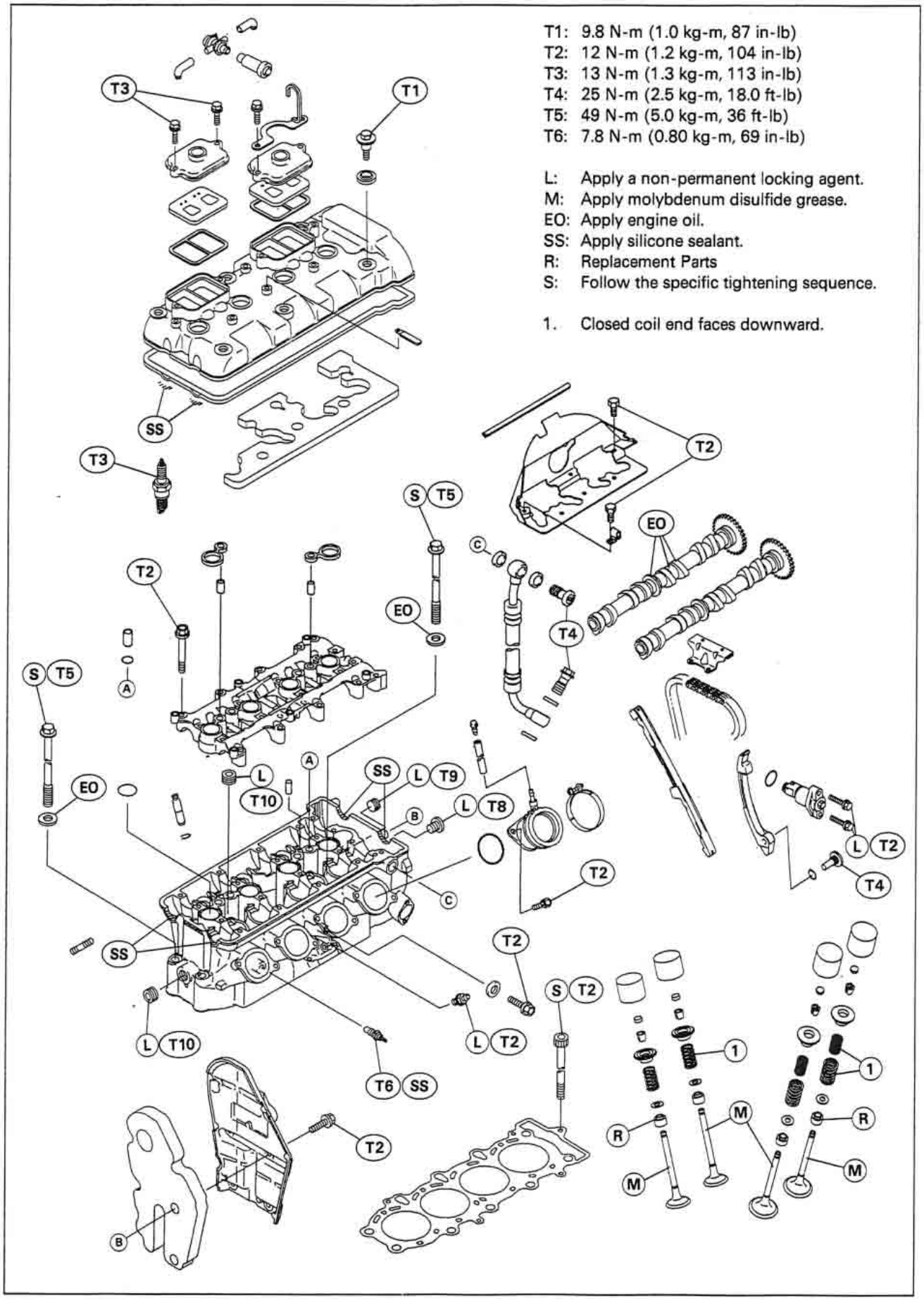

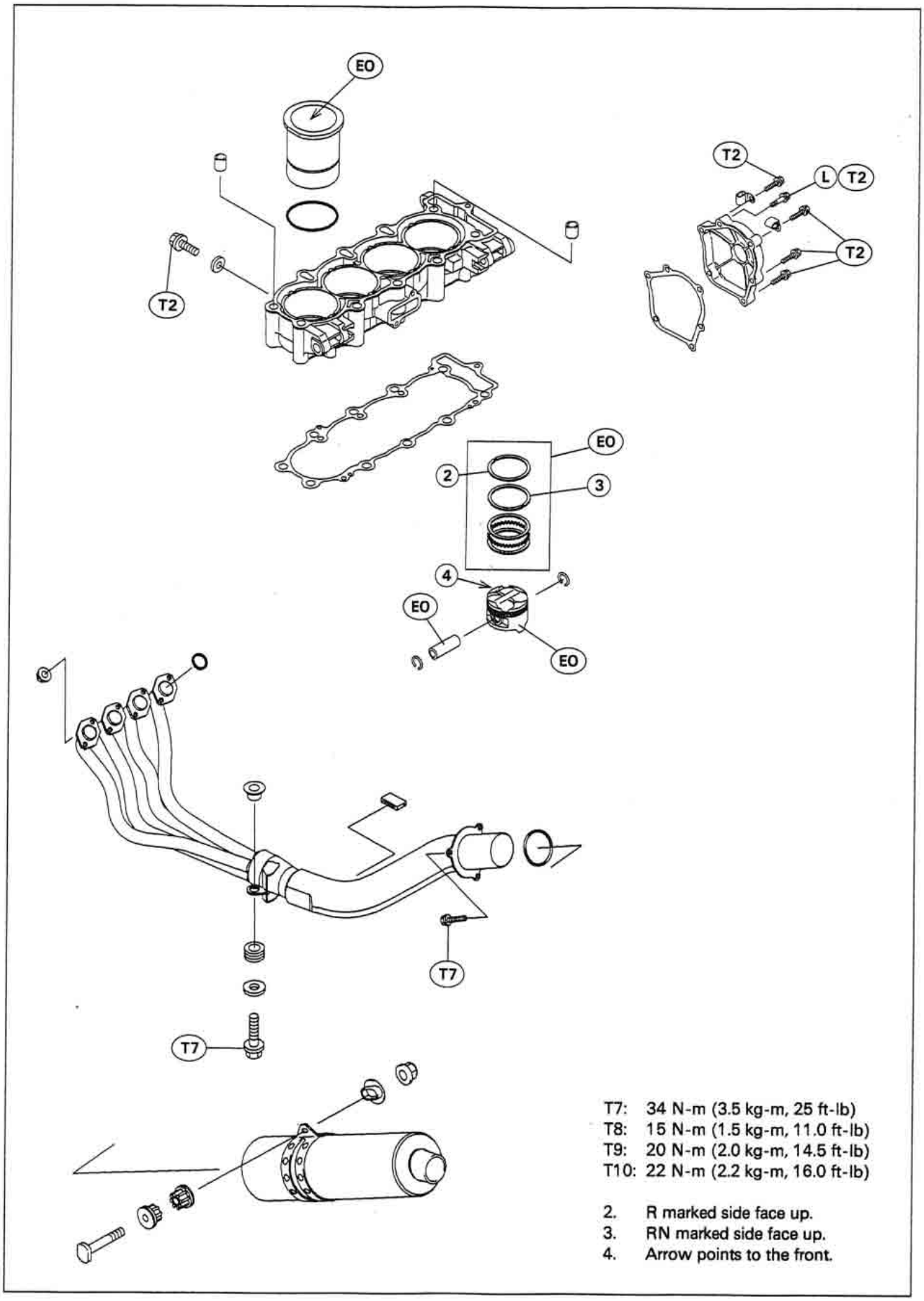

T7: 34 N-m (3.5 kg-m, 25 ft-lb)
T8: 15 N-m (1.5 kg-m, 11.0 ft-lb)
T9: 20 N-m (2.0 kg-m, 14.5 ft-lb)
T10: 22 N-m (2.2 kg-m, 16.0 ft-lb)

2. R marked side face up.
3. RN marked side face up.
4. Arrow points to the front.

Specifications

Item		Standard	Service Limit
Clean Air System:			
Vacuum switch valve closing pressure:		Open → Close 57 ~ 65 kPa (430 ~ 490 mmHg)	- - -
Camshafts			
Cam height:	Exhaust	35.394 ~ 35.406 mm,	34.29 mm
	Inlet	35.143 ~ 35.257 mm,	35.04 mm
Camshaft journal, camshaft cap clearance		0.038 ~ 0.081 mm	0.17 mm
Camshaft journal diameter		23.940 ~ 23.962 mm	23.91 mm
Camshaft bearing inside diameter		24.000 ~ 24.021 mm	24.08 mm
Camshaft runout		TIR 0.02 mm or less	TIR 0.1 mm
Camshaft chain 20-link length		127.00 ~ 127.36 mm	128.9 mm
Cylinder Head:			
Cylinder compression		(usable range) 950 ~ 1 450 kPa (9.7 ~ 14.8 kg/cm², 138 ~ 210 psi) @350 r/min (rpm)	- - -
Cylinder head warp		- - -	0.05 mm
Valves:			
Valve clearance:	Exhaust	0.22 ~ 0.31 mm	- - -
	Inlet	0.15 ~ 0.24 mm	- - -
Valve head thickness:	Exhaust	0.8 mm	0.5 mm
	Inlet	0.5 mm	0.25 mm
Valve stem bend		TIR 0.01mm or less	TIR 0.05 mm
Valve stem diameter:	Exhaust	3.955 ~ 3.970 mm	3.94 mm
	Inlet	3.975 ~ 3.990 mm	3.96 mm
Valve guide inside diameter	Exhaust	4.000 ~ 4.012 mm	4.08 mm
	Inlet	4.000 ~ 4.012 mm	4.08 mm
Valve/valve guide clearance (wobble method):	Exhaust	0.10 ~ 0.18 mm	0.35 mm
	Inlet	0.03 ~ 0.12 mm	0.29 mm
Valve seat cutting angle		45°, 32°, 60°	- - -

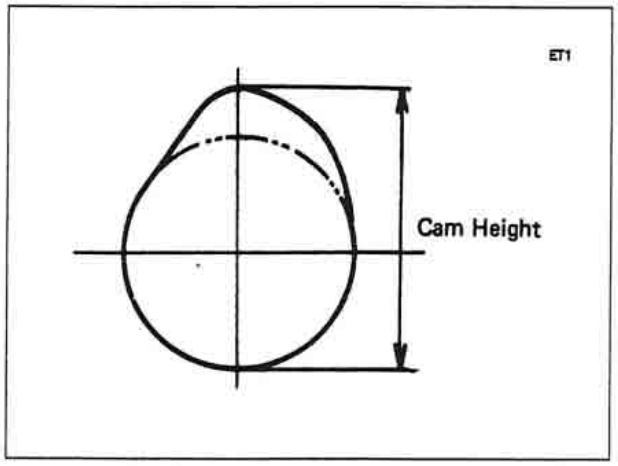

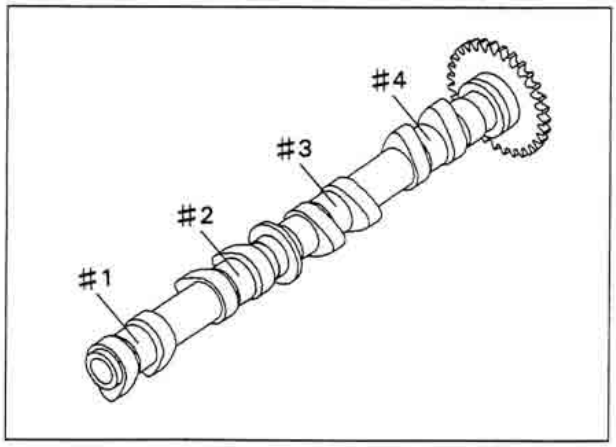

Item		Standard	Service Limit
Valve seat surface:			
Width:	Exhaust	0.5 ~ 1.0 mm	– – –
	Inlet	0.5 ~ 1.0 mm	– – –
Outside diameter:	Exhaust	22.1 ~ 22.3 mm	– – –
	Inlet	26.1 ~ 26.3 mm	– – –
Valve spring free length:	Exhaust	49.5 mm	48.1 mm
	Inlet(Inner)	44.1 mm	42.6 mm
	Inlet(Outer)	48.2 mm	46.6 mm
Cylinder, Piston:			
Cylinder inside diameter		66.000 ~ 66.012 mm	66.10 mm
Piston diameter		65.940 ~ 65.960 mm	65.79 mm
Piston/cylinder clearance		0.040 ~ 0.072 mm	– – –
Piston ring/groove clearance:	Top	0.05 ~ 0.09 mm	0.19 mm
	Second	0.03 ~ 0.07 mm	0.17 mm
Piston ring groove width:	Top	0.84 ~ 0.86 mm	0.94 mm
	Second	0.82 ~ 0.84 mm	0.92 mm
Piston ring thickness:	Top	0.77 ~ 0.79 mm	0.70 mm
	Second	0.77 ~ 0.79 mm	0.70 mm
Piston ring end gap:	Top	0.15 ~ 0.30 mm	0.6 mm
	Second	0.30 ~ 0.45 mm	0.8 mm

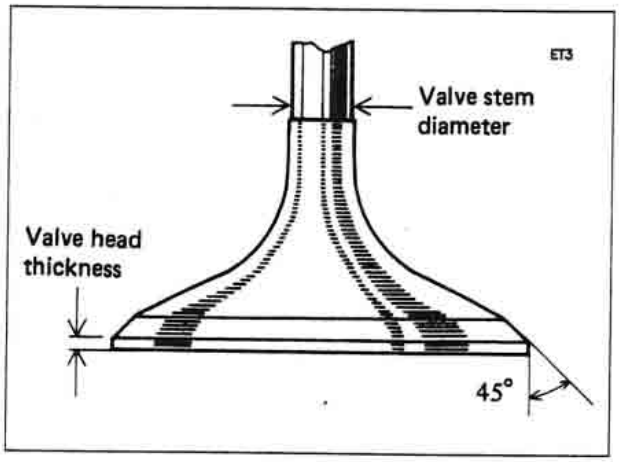

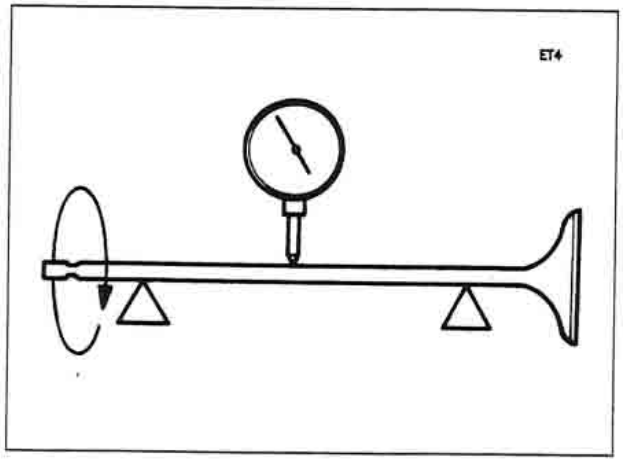

Special Tools – **Fork Oil Level Gauge: 57001-1290**
Vacuum Gauge: 57001-1369
Spark Plug Wrench, 16mm: 92110-1146
Compression Gauge: 57001-221
Compression Gauge Adapter, M10 X 1.0: 57001-1317
Valve Spring Compressor Assembly: 57001-241
Valve Spring Compressor Adapter, Φ22: 57001-1202
Valve Spring Compressor Adapter, Φ20: 57001-1154
Valve Guide Arbor, Φ4: 57001-1273
Valve Guide Reamer, Φ4: 57001-1274
Valve Seat Cutter, 45° – Φ24.5: 57001-1113
Valve Seat Cutter, 32° – Φ25: 57001-1118
Valve Seat Cutter, 60° – Φ30: 57001-1123
Valve Seat Cutter, 45° – Φ27.5: 57001-1114
Valve Seat Cutter, 32° – Φ28: 57001-1119
Valve Seat Cutter, 60° – Φ25: 57001-1328
Valve Seat Cutter Holder, Φ4: 57001-1275
Valve Seat Cutter Holder Bar: 57001-1128
Piston Pin Puller Assembly: 57001-910

Sealant – **Kawasaki Bond (Silicone Sealant): 56019-120**

Clean Air System

Air Suction Valve Inspection

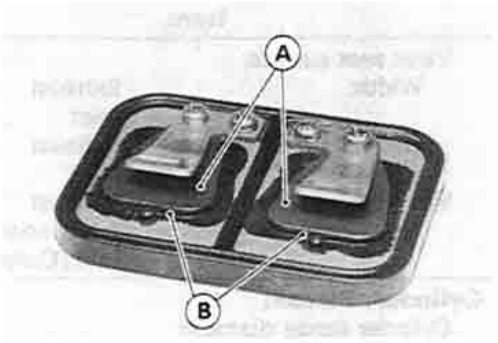

- Visually inspect the reeds [A] for cracks, folds, warps, heat damage, or other damage.

★If there is any doubt as to the condition of the reed, replace the air suction valve as an assembly.

- Check the reed contact areas [B] of the valve holder for grooves, scratches, any signs of separation from the holder, or heat damage.

★If there is any doubt as to the condition of the reed contact areas, replace the air suction valve as an assembly.

★If any carbon or other foreign particles have accumulated between the reed and the reed contact area, wash the valve assembly with a high flash-point solvent.

CAUTION
Do not scrape off the deposits with a scraper as this could damage the rubber, requiring replacement of the suction valve assembly.

Vacuum Switch Valve Installation

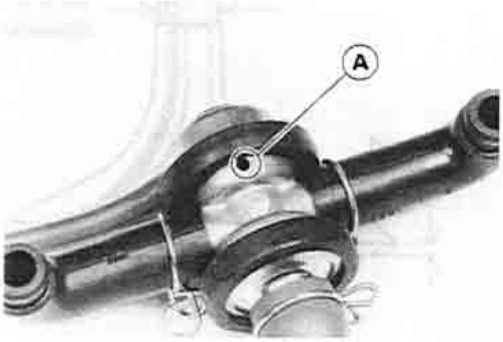

- Install the vacuum switch valve so that the air hole [A] faces downwards.
- Route the hoses correctly(see General Information chapter).

Vacuum Switch Valve Test

Using the vacuum gauge and a syringe, inspect the vacuum switch operation as follows:

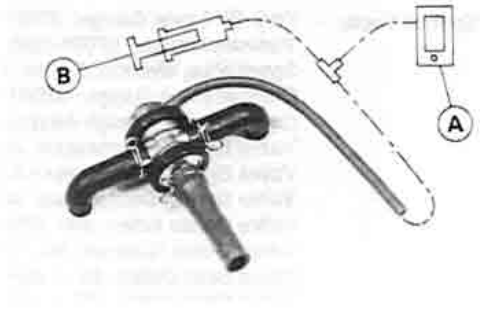

- Remove the vacuum switch valve.
- Connect the vacuum gauge [A] and syringe [B] or fork oil level gauge to the vacuum hoses as shown.

Special Tools – Vacuum Gauge: 57001-1369
Fork Oil Level Gauge: 57001-1290

● Gradually raise the vacuum (lower the pressure) applied to the vacuum switch valve, and check the valve operation. When the vacuum is low, the vacuum switch valve should permit air to flow. When the vacuum raises to 57 ~ 65 kPa (430 ~ 490 mm Hg), it should stop air flow.

★ If the vacuum switch valve does not operate as described, replace it with a new one.

NOTE

○ *To check air flow through the vacuum switch valve, just blow through the air cleaner hose.*

Vacuum Switch Valve Closing Pressure (Open → Close)
Standard: 57 ~ 65 kPa (430 ~ 490 mmHg)

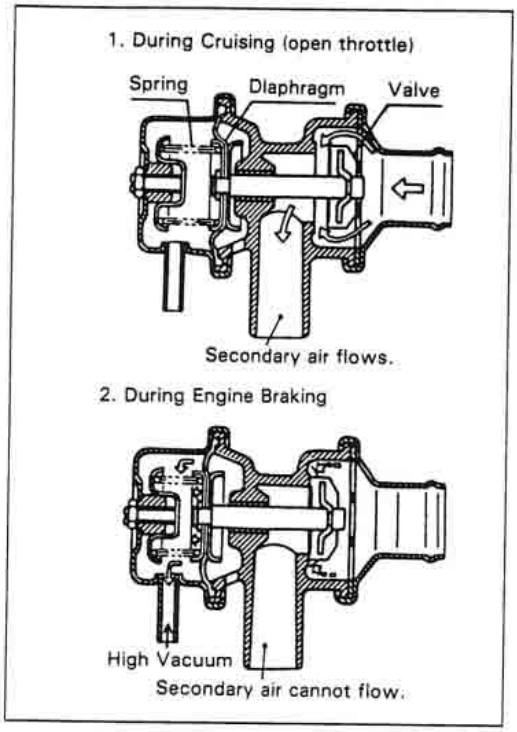

Clean Air System Hose Inspection

● Be certain that all the hoses are routed without being flattened or kinked, and are connected correctly to the air cleaner housing, vacuum switch valve, #2 and #3 carburetor holders and air suction valve covers.

★ If they are not, correct them. Replace them if they are damaged.

Cylinder Head Cover

Cylinder Head Cover Removal

- Remove:
  Right Lower Fairing (see Frame chapter)
  Engine Side Cover [A] and Bolts [B]

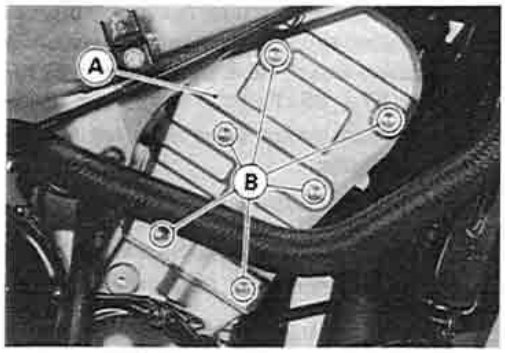

Seats (see Frame chapter)
Fuel Tank, Air Cleaner Housing and Carburetor (see Fuel System chapter)
Vacuum Valve
Vacuum Switch Valve and Hoses
Spark Plug Caps
Vacuum Fitting Hoses (Carburetor Holder)
Baffle Plate Bolts [A]
Baffle Plate [B] and Damper [C]

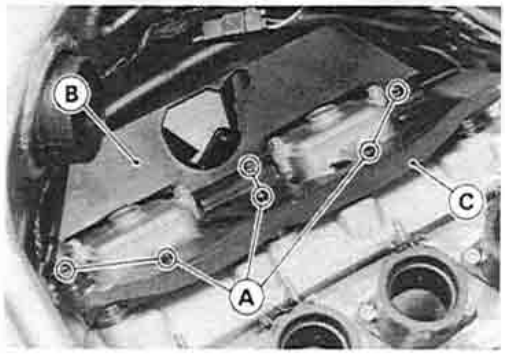

- Remove the cylinder head cover bolts [A] and take off the cover [B].

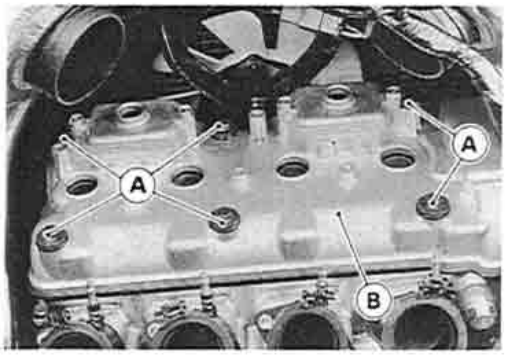

Cylinder Head Cover Installation

- Apply silicone sealant to the cylinder head as shown [A].

  Sealant – Kawasaki Bond (Silicone Sealant): 56019-120

- Replace the head cover gasket with a new one if damaged.

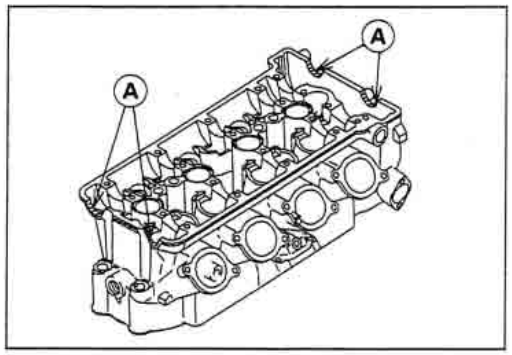

- Be sure to install the pins [A] and rubber gaskets [B].
- Tighten the cylinder head cover bolts.

  Torque – Cylinder Head Cover Bolts: 9.8 N-m (1.0 kg-m, 87 in-lb)

- Tighten the engine side cover bolts.

  Torque – Engine Side Cover Bolts: 12 N-m (1.2 kg-m, 104 in-lb)

- Tighten the baffle plate bolts.

  Torque – Baffle Plate Bolts: 12 N-m (1.2 kg-m, 104 in-lb)

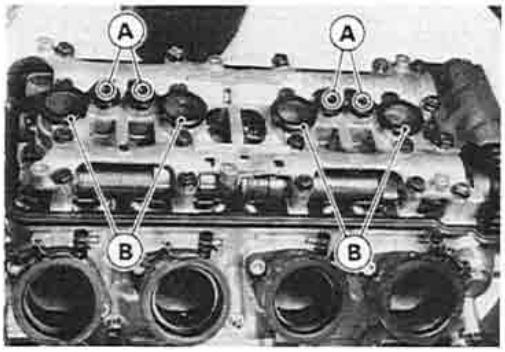

Camshaft Chain Tensioner

Camshaft Chain Tensioner Removal

CAUTION

This is a non-return type camshaft chain tensioner. The push rod does not return to its original position once it moves out to take up camshaft chain slack. Observe all the rules listed below:
When removing the tensioner, do not take out the mounting bolts only halfway. Retightening the mounting bolts from this position could damage the tensioner and the camshaft chain. Once the bolts are loosened, the tensioner must be removed and reset as described in "Camshaft Chain Tensioner Installation."
Do not turn over the crankshaft while the tensioner is removed. This could upset the camshaft chain timing, and damage the valves.

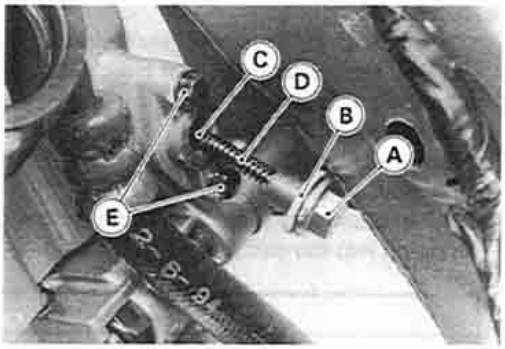

- Remove:
  - Seats (see Frame chapter)
  - Fuel Tank, Air Cleaner Housing and Carburetors (see Fuel System chapter)
  - Ignition coil (#2, #3)
  - Cap Bolt [A], Washer [B], Spring [C] and Rod [D]
- Remove the mounting bolts [E] and take off the camshaft chain tensioner.

Camshaft Chain Tensioner Installation

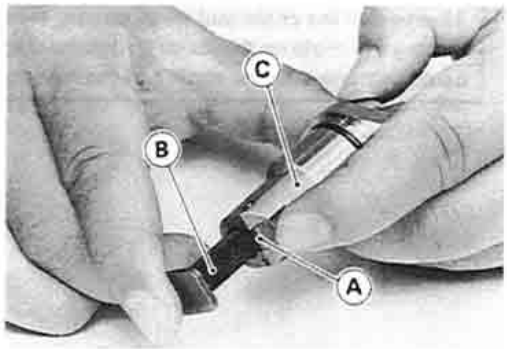

- Release the stopper [A] and push the push rod [B] into the tensioner body [C].
- Install the tensioner body so that the stopper faces upward.

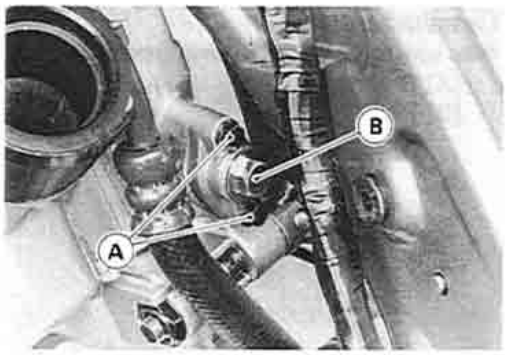

- Apply a non-permanent locking agent to the threads of the tensioner mounting bolts [A] and tighten them.

  Torque – Camshaft Chain Tensioner Mounting Bolts: 12 N-m (1.2 kg-m, 104 in-lb)

- Install the spring and washer.
- Tighten the cap bolt [B].

Camshaft, Camshaft Chain

Camshaft Removal

- Remove:
  Radiator (see Cooling System chapter)
  Cylinder Head Cover (see Cylinder Head Cover Removal)
  Pickup Coil Cover
- Position the crankshaft at #1, 4 piston TDC.
  [A] TDC mark for #1, 4 Pistons
  [B] Timing Mark (crankcase halves mating surface)

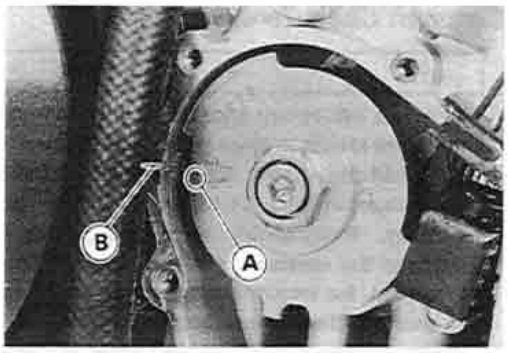

- Remove:
  Camshaft Chain Tensioner (see Camshaft Chain Tensioner Removal)
  Rubber Gaskets and Cylinder Head Cover Gasket
  Camshaft Cap Bolts
  Chain Guide [A]
  Camshaft Cap [B]
  Camshafts [C]
- Stuff a clean cloth into the chain tunnel to keep any parts from dropping into the crankcase.

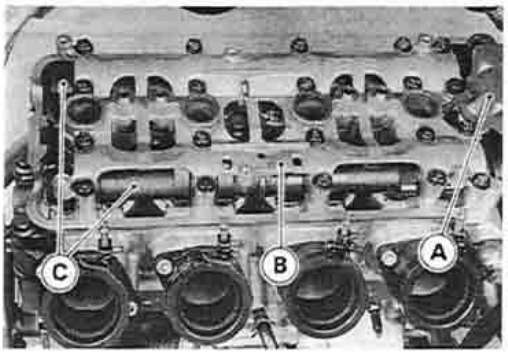

CAUTION

The crankshaft may be turned while the camshafts are removed. Always pull the chain taut while turning the crankshaft. This avoids kinking the chain on the lower (crankshaft) sprocket. A kinked chain could damage both the chain and the sprocket.

Camshaft Installation

- Be sure to install the following parts.
  [A] O-rings
  [B] Pins

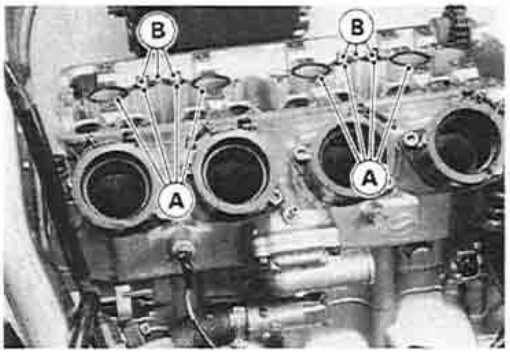

- Apply engine oil to all cam parts and journals.
- If a new camshaft is to be used, apply a thin coat of molybdenum disulfide grease to the cam surfaces.

NOTE

○ *The exhaust camshaft has a 117 EX mark[A] and the inlet camshaft has a 117 IN mark[B]. Be careful not to mix up these shafts.*

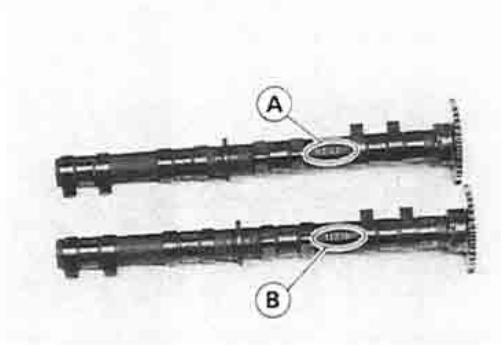

- Position the crankshaft at #1, 4 piston TDC (see Camshaft Removal).
- Pull the tension side (exhaust side) [A] of the chain taut to install the chain.
- Engage the camshaft chain with the camshaft sprockets so that the timing marks on the sprockets are positioned as shown.

○ The timing marks must be aligned with the cylinder head upper surface [B].
  [C] EX mark
  [D] IN mark

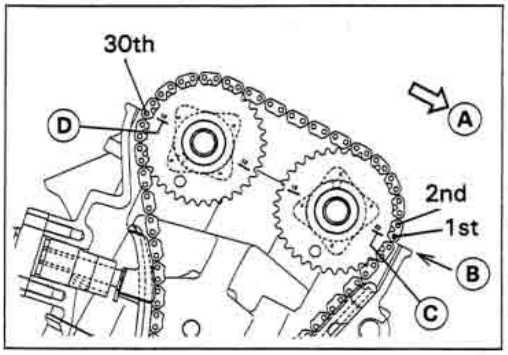

- Install the camshaft cap and chain guide.
- Tighten the camshaft cap bolts.

Torque – Camshaft Cap Bolts: 12 N-m (1.2 kg-m, 104 in-lb)

- Install the camshaft chain tensioner (see Camshaft Chain Tensioner Installation).
- Install the cylinder head cover (see Cylinder Head Cover Installation).

Camshaft, Camshaft Cap Wear

- Measure each clearance between the camshaft journal and the camshaft cap using plastigage (press gauge) [A].
- Tighten the camshaft cap bolts.

Torque – Camshaft Cap Bolts: 12 N-m(1.2 kg-m, 104 in-lb)

NOTE

○ *Do not turn the camshaft when the plastigage is between the journal and camshaft cap.*

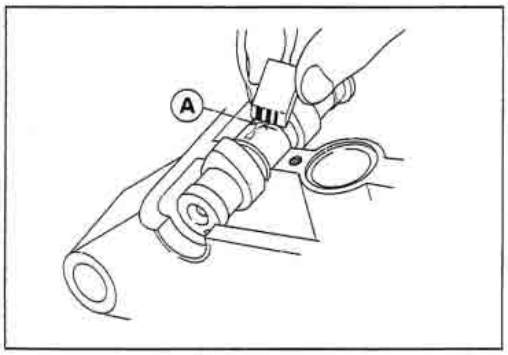

★ If any clearance exceeds the service limit, measure the diameter of each camshaft journal with a micrometer.

Camshaft Journal, Camshaft Cap Clearance
Standard: 0.038 ~ 0.081 mm
Service Limit: 0.17 mm

★ If the camshaft journal diameter is less than the service limit, replace the camshaft with a new one and measure the clearance again.

★ If the clearance still remains out of the limit, replace the cylinder head unit.

Camshaft Chain Removal

- Split the crankcase (see Crankshaft/Transmission chapter).
- Remove the camshaft chain [A] from the crankshaft sprocket.

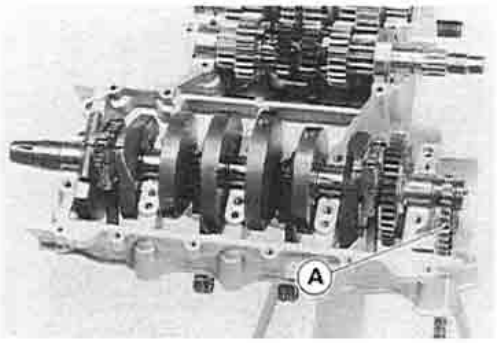

Camshaft Chain Wear

- Hold the chain taut with a force of about 5 kg in some manner, and measure a 20-link length. Since the chain may wear unevenly, take measurement at several places.

★If any measurement exceeds the service limit, replace the chain.

Camshaft Chain 20-link Length

Standard:	**127.00 ~ 127.36 mm**
Service Limit:	**128.9 mm**

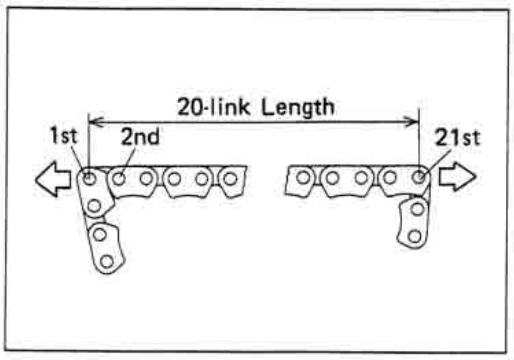

Cylinder Head

Cylinder Compression Measurement

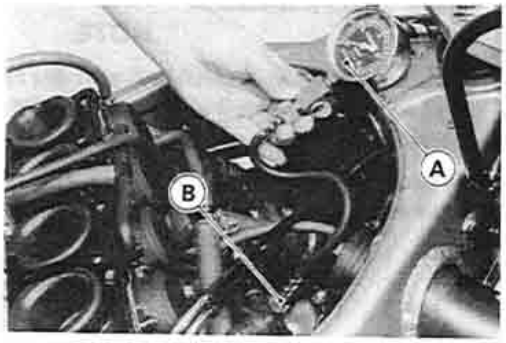

- Warm up the engine thoroughly.
- Stop the engine, and remove the spark plugs.

Special Tool – Spark Plug Wrench, 16mm: 92110-1146

- Measure the cylinder compression.

○ Using the starter motor, turn the engine over with the throttle fully open until the compression gauge stops rising; the compression is the highest reading obtainable.

Special Tools – Compression Gauge: 57001-221 [A]
Compression Gauge Adapter, M10 X 1.0: 57001-1317 [B]

NOTE

○ *Be sure the battery is fully charged.*
○ *Be sure no air leaks out of the cylinder head gasket.*

Cylinder Compression
Usable Range : 950 ~ 1450 kPa (9.7 ~ 14.8 kg/cm², 138 ~ 210 psi) @ 350 r/min (rpm)

○ Repeat the measurement for the other cylinder.

★ If cylinder compression is higher than the usable range, check the following:
(1) Carbon build-up on the cylinder head combustion chamber and the piston crown.
(2) Cylinder head gasket is not the original part.
(3) Valve stem oil seals and/or piston rings are damaged.

★ If cylinder compression is lower than the usable range, check the following:
(1) Condition of the valve seat is wrong.
(2) Valve clearance is too small.
(3) Piston/cylinder clearance is excessive.
(4) Cylinder head is warped and/or head gasket is damaged.
(5) Piston ring/piston ring groove clearance is excessive.

Cylinder Head Removal

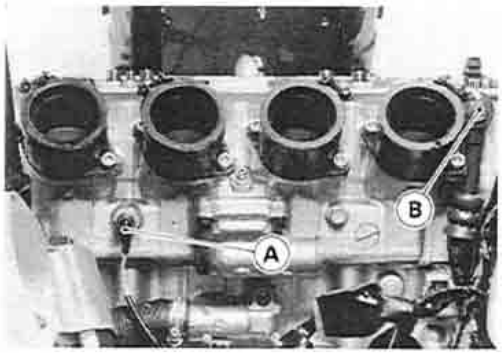

- Drain the coolant (see Cooling System chapter).
- Remove:
  Lower Fairings (see Frame chapter)
  Muffler (see Muffler Removal)
  Cylinder Head Cover (see Cylinder Head Cover Removal)
  Camshaft Chain Tensioner (see Camshaft Chain Tensioner Removal)
  Camshafts (see Camshaft Removal)
  Water Temperature Sensor Lead Connector [A]
  Oil Hose Banjo Bolt [B]

- Remove the 6 mm cylinder head bolts [A], and then the 10 mm cylinder head bolts [B].
- Take off the cylinder head.

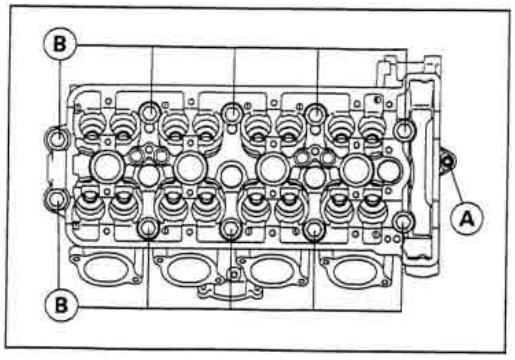

Cylinder Head Installation

NOTE

○ *The camshaft cap is machined with the cylinder head, so if a new cylinder head is installed, use the cap that is supplied with the new head.*

● Install a new cylinder head gasket.
● Apply engine oil to both sides [A] of the cylinder head bolt washers.

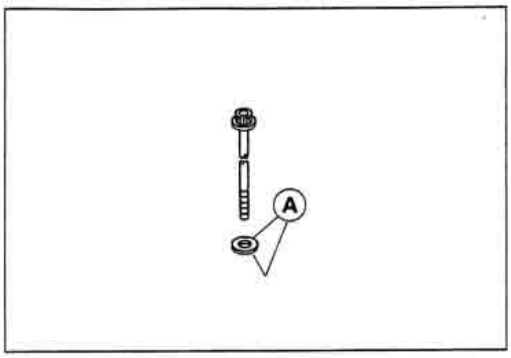

● Tighten the 10 mm cylinder head bolts following the tightening sequence [1 ~ 10].
○ Note number [7] and [8] head bolts are shorter.

Torque – Cylinder Head Bolts (10mm):

First	**20 N-m (2.0 kg-m, 14.5 ft-lb)**
Final	**49 N-m (5.0 kg-m, 36 ft-lb)**

● Tighten the 6 mm cylinder head bolts [11].

Torque – Cylinder Head Bolts (6 mm): 12 N-m (1.2 kg-m, 104 in-lb)

● Tighten the oil hose banjo bolt.

Torque – Oil Hose Banjo Bolt: 25 N-m (2.5 kg-m, 18.0 ft-lb)

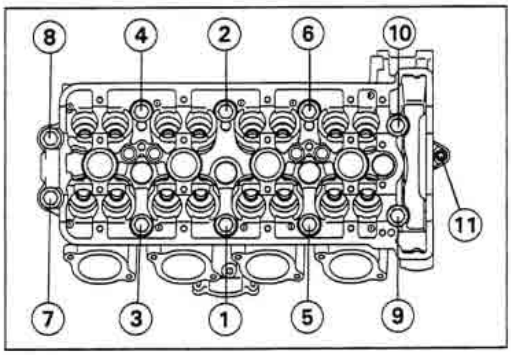

Valves

Valve Clearance Adjustment

NOTE

○ *Valve clearance must be checked and adjusted when the engine is cold (at room temperature).*

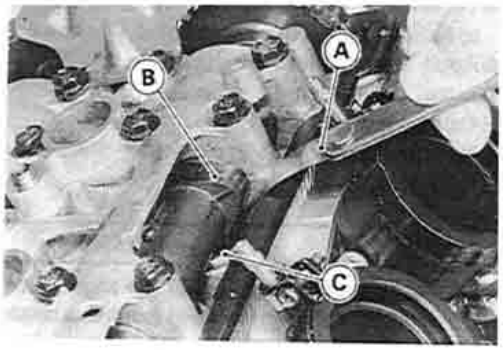

● Remove:
Lower Fairings (see Frame chapter)
Radiator (see Cooling System chapter)
Pickup Coil Cover
Cylinder Head Cover (see Cylinder Head Cover Removal)

● Using a thickness gauge [A], measure the valve clearance between the cam [B] and the valve lifter [C].

○ **When positioning #4 piston TDC at the end of the compression stroke:**
Inlet valve clearance of #2 and #4 cylinders
Exhaust valve clearance of #3 and #4 cylinders

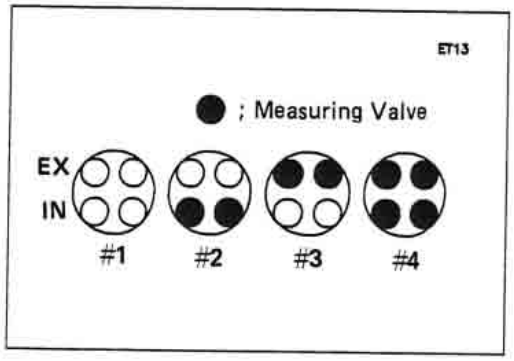

○ **When positioning #1 piston TDC at the end of the compression stroke:**
Inlet valve clearance of #1 and #3 cylinders
Exhaust valve clearance of #1 and #2 cylinders

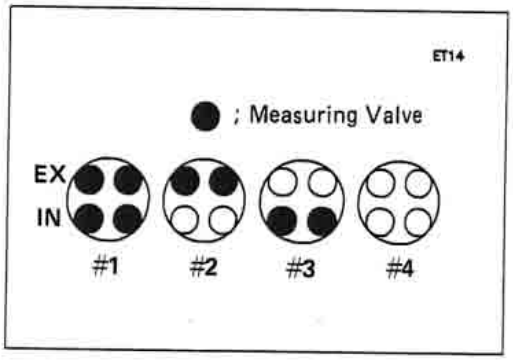

Valve Clearance

Standard:	**IN: 0.15 ~ 0.24 mm**
	EX: 0.22 ~ 0.31 mm

★ If the valve clearance is not within the specified range, first record the clearance, and then adjust it.

● To change the valve clearance, remove the camshaft chain tensioner, camshafts and valve lifters. Replace the shim with one of a different thickness.

NOTE

○ *Mark and record the valve lifter and shim locations so they can be reinstalled in their original positions.*

- To select a new shim which brings the valve clearance within the specified range, refer to the Valve Clearance Adjustment Charts.
- Apply a thin coat of molybdenum disulfide grease to the valve lifters.
- Install the camshafts. Be sure to time the camshafts properly (see Camshaft Installation).
- Remeasure any valve clearance that was adjusted. Readjust if necessary.

CAUTION
Do not put shim stock under the shim. This may cause the shim to pop out at high rpm, causing extensive engine damage. **Do not grind the shim. This may cause it to fracture, causing extensive engine damage.**

VALVE CLEARANCE ADJUSTMENT CHART
INLET VALVE

	PRESENT SHIM																				
												Example									
PART No. (92180 -)	1014	1016	1018	1020	1022	1024	1026	1028	1030	1032	1034	1036	1038	1040	1042	1044	1046	1048	1050	1052	1054
MARK	50	55	60	65	70	75	80	85	90	95	00	05	10	15	20	25	30	35	40	45	50
THICKNESS (mm)	2.50	2.55	2.60	2.65	2.70	2.75	2.80	2.85	2.90	2.95	3.00	3.05	3.10	3.15	3.20	3.25	3.30	3.35	3.40	3.45	3.50

VALVE CLEARANCE MEASUREMENT																						
0.00 ~ 0.04				2.50	2.55	2.60	2.65	2.70	2.75	2.80	2.85	2.90	2.95	3.00	3.05	3.10	3.15	3.20	3.25	3.30	3.35
0.05 ~ 0.09			2.50	2.55	2.60	2.65	2.70	2.75	2.80	2.85	2.90	2.95	3.00	3.05	3.10	3.15	3.20	3.25	3.30	3.35	3.40
0.10 ~ 0.14		2.50	2.55	2.60	2.65	2.70	2.75	2.80	2.85	2.90	2.95	3.00	3.05	3.10	3.15	3.20	3.25	3.30	3.35	3.40	3.45
0.15 ~ 0.24	SPECIFIED CLEARANCE/NO CHANGE REQUIRED																				
0.25 ~ 0.29	2.55	2.60	2.65	2.70	2.75	2.80	2.85	2.90	2.95	3.00	3.05	3.10	3.15	3.20	3.25	3.30	3.35	3.40	3.45	3.50	
0.30 ~ 0.34	2.60	2.65	2.70	2.75	2.80	2.85	2.90	2.95	3.00	3.05	3.10	3.15	3.20	3.25	3.30	3.35	3.40	3.45	3.50		
0.35 ~ 0.39	2.65	2.70	2.75	2.80	2.85	2.90	2.95	3.00	3.05	3.10	3.15	3.20	3.25	3.30	3.35	3.40	3.45	3.50			
0.40 ~ 0.44 (Example)	2.70	2.75	2.80	2.85	2.90	2.95	3.00	3.05	3.10	3.15	3.20	3.25	3.30	3.35	3.40	3.45	3.50				
0.45 ~ 0.49	2.75	2.80	2.85	2.90	2.95	3.00	3.05	3.10	3.15	3.20	3.25	3.30	3.35	3.40	3.45	3.50					
0.50 ~ 0.54	2.80	2.85	2.90	2.95	3.00	3.05	3.10	3.15	3.20	3.25	3.30	3.35	3.40	3.45	3.50						
0.55 ~ 0.59	2.85	2.90	2.95	3.00	3.05	3.10	3.15	3.20	3.25	3.30	3.35	3.40	3.45	3.50							
0.60 ~ 0.64	2.90	2.95	3.00	3.05	3.10	3.15	3.20	3.25	3.30	3.35	3.40	3.45	3.50								
0.65 ~ 0.69	2.95	3.00	3.05	3.10	3.15	3.20	3.25	3.30	3.35	3.40	3.45	3.50									
0.70 ~ 0.74	3.00	3.05	3.10	3.15	3.20	3.25	3.30	3.35	3.40	3.45	3.50										
0.75 ~ 0.79	3.05	3.10	3.15	3.20	3.25	3.30	3.35	3.40	3.45	3.50											
0.80 ~ 0.84	3.10	3.15	3.20	3.25	3.30	3.35	3.40	3.45	3.50												
0.85 ~ 0.89	3.15	3.20	3.25	3.30	3.35	3.40	3.45	3.50													
0.90 ~ 0.94	3.20	3.25	3.30	3.35	3.40	3.45	3.50														
0.95 ~ 0.99	3.25	3.30	3.35	3.40	3.45	3.50															
1.00 ~ 1.04	3.30	3.35	3.40	3.45	3.50																
1.05 ~ 1.09	3.35	3.40	3.45	3.50																	
1.10 ~ 1.14	3.40	3.45	3.50																		
1.15 ~ 1.19	3.45	3.50																			
1.20 ~ 1.24	3.50																				

INSTALL THE SHIM OF THIS THICKNESS (mm)

1. Measure the clearance (when engine is cold).
2. Check present shim size.
3. Match clearance in vertical column with present shim size in horizontal column.
4. Install the shim specified where the lines intersect. This shim will give the proper clearance.

   Example: Present shim is **3.05 mm**
   Measured clearance is **0.40 mm**
   Replace **3.05 mm** shim with **3.25 mm** shim.

5. Remeasure the valve clearance and readjust if necessary.

NOTE

○ *If there is no clearance, select a shim which is several sizes smaller and then measure the clearance.*

VALVE CLEARANCE ADJUSTMENT CHART
EXHAUST VALVE

	PRESENT SHIM																				
PART No. (92180 -)	1014	1016	1018	1020	1022	1024	1026	1028	1030	1032	1034	1036	1038	1040	1042	1044	1046	1048	1050	1052	1054
MARK	50	55	60	65	70	75	80	85	90	95	00	05	10	15	20	25	30	35	40	45	50
THICKNESS (mm)	2.50	2.55	2.60	2.65	2.70	2.75	2.80	2.85	2.90	2.95	3.00	3.05	3.10	3.15	3.20	3.25	3.30	3.35	3.40	3.45	3.50

Example

VALVE CLEARANCE MEASUREMENT																					
0.00 ~ 0.02						2.50	2.55	2.60	2.65	2.70	2.75	2.80	2.85	2.90	2.95	3.00	3.05	3.10	3.15	3.20	3.25
0.03 ~ 0.06					2.50	2.55	2.60	2.65	2.70	2.75	2.80	2.85	2.90	2.95	3.00	3.05	3.10	3.15	3.20	3.25	3.30
0.07 ~ 0.11				2.50	2.55	2.60	2.65	2.70	2.75	2.80	2.85	2.90	2.95	3.00	3.05	3.10	3.15	3.20	3.25	3.30	3.35
0.12 ~ 0.16			2.50	2.55	2.60	2.65	2.70	2.75	2.80	2.85	2.90	2.95	3.00	3.05	3.10	3.15	3.20	3.25	3.30	3.35	3.40
0.17 ~ 0.21		2.50	2.55	2.60	2.65	2.70	2.75	2.80	2.85	2.90	2.95	3.00	3.05	3.10	3.15	3.20	3.25	3.30	3.35	3.40	3.45
0.22 ~ 0.31	SPECIFIED CLEARANCE/NO CHANGE REQUIRED																				
0.32 ~ 0.36	2.55	2.60	2.65	2.70	2.75	2.80	2.85	2.90	2.95	3.00	3.05	3.10	3.15	3.20	3.25	3.30	3.35	3.40	3.45	3.50	
0.37 ~ 0.41	2.60	2.65	2.70	2.75	2.80	2.85	2.90	2.95	3.00	3.05	3.10	3.15	3.20	3.25	3.30	3.35	3.40	3.45	3.50		
0.42 ~ 0.46	2.65	2.70	2.75	2.80	2.85	2.90	2.95	3.00	3.05	3.10	3.15	3.20	3.25	3.30	3.35	3.40	3.45	3.50			
0.47 ~ 0.51	2.70	2.75	2.80	2.85	2.90	2.95	3.00	3.05	3.10	3.15	3.20	3.25	3.30	3.35	3.40	3.45	3.50				
0.52 ~ 0.56	2.75	2.80	2.85	2.90	2.95	3.00	3.05	3.10	3.15	3.20	3.25	3.30	3.35	3.40	3.45	3.50					
0.57 ~ 0.61	2.80	2.85	2.90	2.95	3.00	3.05	3.10	3.15	3.20	3.25	3.30	3.35	3.40	3.45	3.50						
0.62 ~ 0.66	2.85	2.90	2.95	3.00	3.05	3.10	3.15	3.20	3.25	3.30	3.35	3.40	3.45	3.50							
0.67 ~ 0.71	2.90	2.95	3.00	3.05	3.10	3.15	3.20	3.25	3.30	3.35	3.40	3.45	3.50								
0.72 ~ 0.76	2.95	3.00	3.05	3.10	3.15	3.20	3.25	3.30	3.35	3.40	3.45	3.50									
0.77 ~ 0.81	3.00	3.05	3.10	3.15	3.20	3.25	3.30	3.35	3.40	3.45	3.50										
0.82 ~ 0.86	3.05	3.10	3.15	3.20	3.25	3.30	3.35	3.40	3.45	3.50											
0.87 ~ 0.91	3.10	3.15	3.20	3.25	3.30	3.35	3.40	3.45	3.50												
0.92 ~ 0.96	3.15	3.20	3.25	3.30	3.35	3.40	3.45	3.50													
0.97 ~ 1.01	3.20	3.25	3.30	3.35	3.40	3.45	3.50														
1.02 ~ 1.06	3.25	3.30	3.35	3.40	3.45	3.50															
1.07 ~ 1.11	3.30	3.35	3.40	3.45	3.50																
1.12 ~ 1.16	3.35	3.40	3.45	3.50																	
1.17 ~ 1.21	3.40	3.45	3.50																		
1.22 ~ 1.26	3.45	3.50																			
1.27 ~ 1.31	3.50																				

INSTALL THE SHIM OF THIS THICKNESS (mm)

1. Measure the clearance (when engine is cold).
2. Check present shim size.
3. Match clearance in vertical column with present shim size in horizontal column.
4. Install the shim specified where the lines intersect. This shim will give the proper clearance.

   Example: Present shim is **3.10 mm.**
   Measured clearance is **0.40 mm.**
   Replace **3.10 mm** shim with **3.20 mm** shim.

5. Remeasure the valve clearance and readjust if necessary.

NOTE

○ *If there is no clearance, select a shim which is several sizes smaller and then measure the clearance.*

Valve Removal

- ●Remove the cylinder head (see Cylinder Head Removal).
- ●Remove the valve lifter and shim.
- ○Mark and record the valve lifter and shim locations so they can be installed in their original positions.
- ●Using the valve spring compressor assembly, remove the valve.

Special Tools – Valve Spring Compressor Assembly: 57001-241 [A]
(Inlet) Adapter, Φ22: 57001-1202 [B]
(Exhaust) Adapter, Φ20: 57001-1154

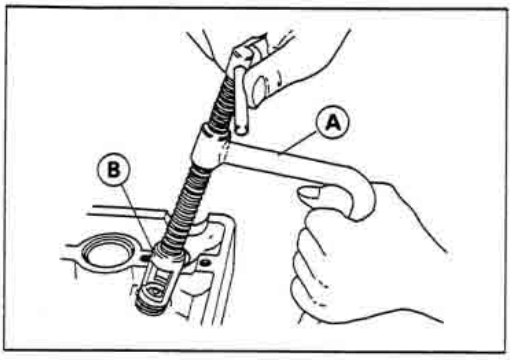

Valve Installation

- ●Replace the oil seal with a new one.
- ●Apply a thin coat of molybdenum disulfide grease to the valve stem before valve installation.
- ●Install the springs so that the closed coil end faces downwards.
- ○Dual Springs [A] are used for the inlet valve.

[B] Valve Stem
[C] Oil Seal
[D] Spring Seat
[E] Closed Coil End
[F] Spring
[G] Retainer
[H] Split Keepers

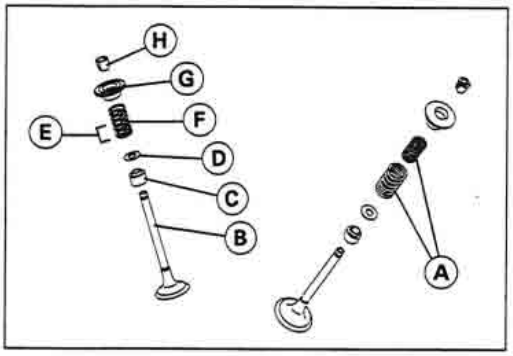

Valve Guide Removal

- ●Remove:
  Valve (see Valve Removal)
  Oil Seal
  Spring Seat
- ●Heat the area around the valve guide to 120 ~ 150°C (248 ~ 302 °F), and hammer lightly on the valve guide arbor [A] to remove the guide from the top of the head.

Special Tool – Valve Guide Arbor, Φ4: 57001-1273

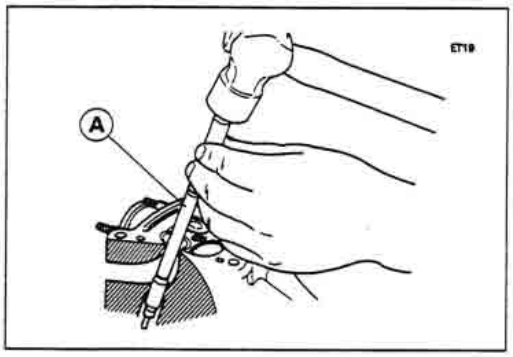

Valve Guide Installation

- ●Apply oil to the valve guide outer surface before installation.
- ●Heat the area around the valve guide hole to about 120 ~ 150 °C (248 ~ 302 °F).
- ●Drive the valve guide in from the top of the head using the valve guide arbor. The circlip stops the guide from going in too far.

Special Tool – Valve Guide Arbor, Φ4: 57001-1273

- ●Ream the valve guide with valve guide reamer [A] even if the old guide is reused.

Special Tool – Valve Guide Reamer, Φ4: 57001-1274

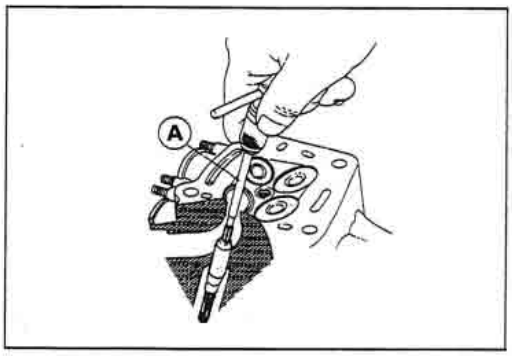

Valve-to-Guide Clearance Measurement (Wobble Method)

If a small bore gauge is not available, inspect the valve guide wear by measuring the valve to valve guide clearance with the wobble method as indicated below.

- ●Insert a new valve [A] into the guide [B] and set a dial gauge against the stem perpendicular to it as close as possible to the cylinder head mating surface.
- ●Move the stem back and forth [C] to measure valve/valve guide clearance.
- ○Repeat the measurement in a direction at a right angle to the first.
- ★If the reading exceeds the service limit, replace the guide.

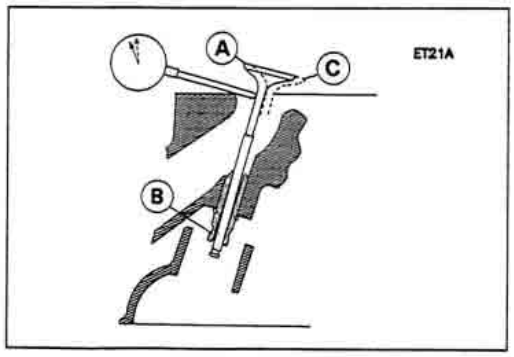

NOTE

○ *The reading is not actual valve/valve guide clearance because the measuring point is above the guide.*

Valve/Valve Guide Clearance (Wobble Method)

	Standard	Service Limit
Inlet	0.03 ~ 0.12 mm	0.29 mm
Exhaust	0.10 ~ 0.18 mm	0.35 mm

Valve Seat Inspection

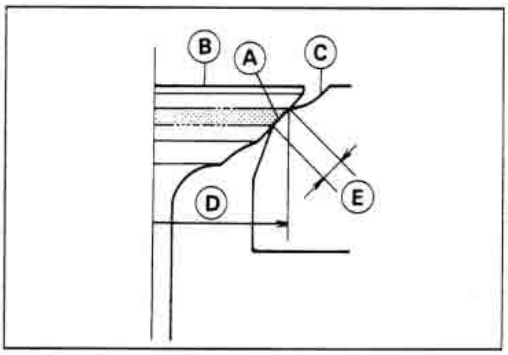

● Remove the valve (see Valve Removal).

● Check the valve seating surface [A] between the valve [B] and valve seat [C].

○ Measure the outside diameter [D] of the seating pattern on the valve seat.

★ If the outside diameter is too large or too small, repair the seat (see Seat Repair).

Valve Seating Surface Outside Diameter

Standard:	**Inlet**	**26.1 ~ 26.3 mm**
	Exhaust	**22.1 ~ 22.3 mm**

○ Measure the seat width [E] of the portion where there is no build-up carbon (white portion) of the valve seat with a vernier caliper.

★ If the width is too wide, too narrow or uneven, repair the seat (see Valve Seat Repair).

Valve Seating Surface Width

Standard:	**Inlet, Exhaust**	**0.5 ~ 1.0 mm**

Valve Seat Repair

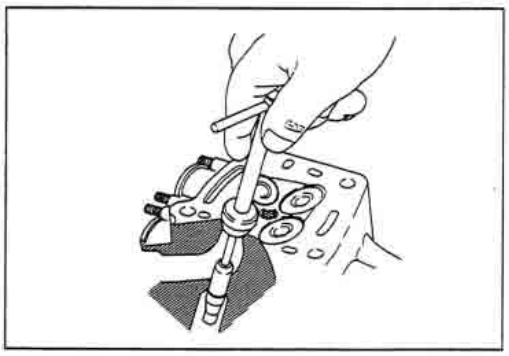

● Repair the valve seat with the valve seat cutters.

Special Tools – Valve Seat Cutter Holder, Φ4: 57001-1275
Valve Seat Cutter Holder Bar: 57001-1128

[For Inlet Valve Seat]
Valve Seat Cutter, 45° – Φ27.5: 57001-1114
Valve Seat Cutter, 32° – Φ28: 57001-1119
Valve Seat Cutter, 60° – Φ30: 57001-1123

[For Exhaust Valve Seat]
Valve Seat Cutter, 45° – Φ24.5: 57001-1113
Valve Seat Cutter, 32° – Φ25: 57001-1118
Valve Seat Cutter, 60° – Φ25: 57001-1328

★ If the manufacturer's instructions are not available, use the following procedure.

Seat Cutter Operation Care:

1. This valve seat cutter is developed to grind the valve for repair. Therefore the cutter must not be used for other purposes than seat repair.
2. Do not drop or shock the valve seat cutter, or the diamond particles may fall off.
3. Do not fail to apply engine oil to the valve seat cutter before grinding the seat surface. Also wash off ground particles sticking to the cutter with washing oil.

NOTE

○ *Do not use a wire brush to remove the metal particles from the cutter. It will take off the diamond particles.*

4. Setting the valve seat cutter holder in position, operate the cutter in one hand. Do not apply too much force to the diamond portion.

NOTE

○ *Prior to grinding, apply engine oil to the cutter and during the operation, wash off any ground particles sticking to the cutter with washing oil.*

5. After use, wash it with washing oil and apply thin layer of engine oil before storing.

Marks Stamped on the Cutter:

The marks stamped on the back of the cutter [A] represent the following.

60° ..... Cutter angle [B]
37.5Φ ..... Outer diameter of cutter [C]

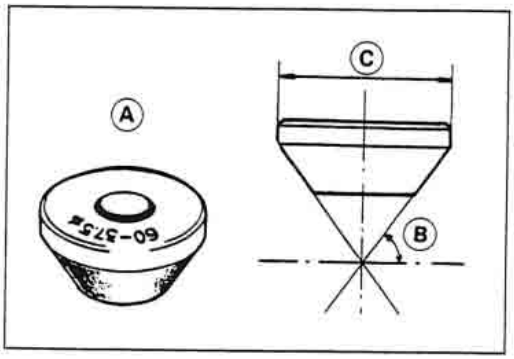

Operating Procedures:

- Clean the seat area carefully.
- Coat the seat with machinist's dye.
- Fit a 45° cutter into the holder and slide it into the valve guide.
- Press down lightly on the handle and turn it right or left. Grind the seating surface only until it is smooth.

CAUTION
Do not grind the seat too much. Overgrinding will reduce valve clearance by sinking the valve into the head. If the valve sinks too far into the head, it will be impossible to adjust the clearance, and the cylinder head must be replaced.

- Measure the outside diameter of the seating surface with a vernier caliper.

★ If the outside diameter of the seating surface is too small, repeat the 45° grind until the diameter is within the specified range.

★ If the outside diameter of the seating surface is too large, make the 32° grind described below.

★ If the outside diameter of the seating surface is within the specified range, measure the seat width as described below.

- Grind the seat at a 32° angle until the seat O.D. is within the specified range.

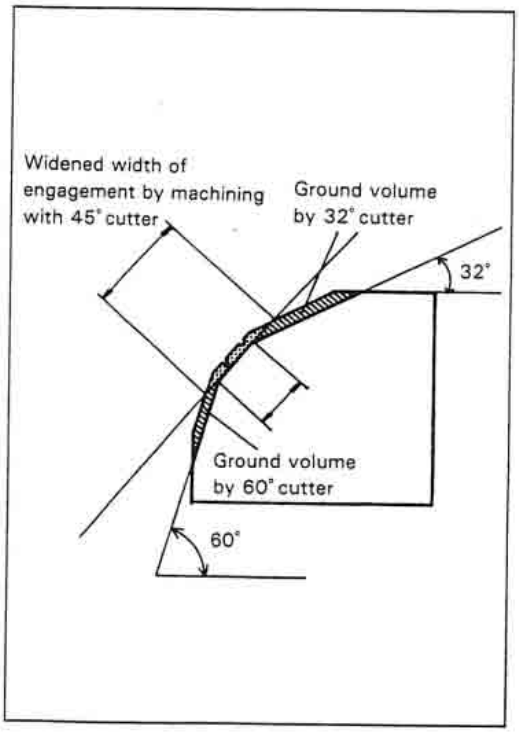

○To make the 32° grind, fit a 32° cutter into the holder, and slide it into the valve guide.
○Turn the holder one turn at a time while pressing down very lightly. Check the seat after each turn.

CAUTION
The 32° cutter removes material very quickly. Check the seat outside diameter frequently to prevent overgrinding.

○After making the 32° grind, return to the seat O.D. measurement step above.
●To measure the seat width, use a vernier caliper to measure the width of the 45° angle portion of the seat at several places around the seat.
★If the seat width is too narrow, repeat the 45° grind until the seat is slightly too wide, and then return to the seat O.D. measurement step above.
★If the seat width is too wide, make the 60° grind described below.
★If the seat width is within the specified range, lap the valve to the seat as described below.
●Grind the seat at a 60° angle until the seat width is within the specified range.
○To make the 60° grind, fit 60° cutter into the holder, and slide it into the valve guide.
○Turn the holder, while pressing down lightly.
○After making the 60° grind, return to the seat width measurement step above.
●Lap the valve to the seat, once the seat width and O.D. are within the ranges specified above.
○Put a little coarse grinding compound on the face of the valve in a number of places around the valve head.
○Spin the valve against the seat until the grinding compound produces a smooth, matched surface on both the seat and the valve.
○Repeat the process with a fine grinding compound.

[A] Lapper
[B] Valve Seat
[C] Valve

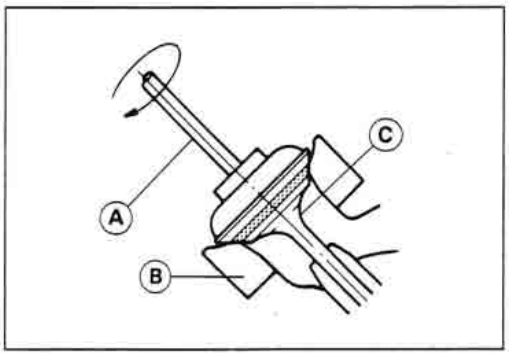

●The seating area should be marked about in the middle of the valve face.
★If the seat area is not in the right place on the valve, check to be sure the valve is the correct part. If it is, it may have been refaced too much; replace it.
●Be sure to remove all grinding compound before assembly.
●When the engine is assembled, be sure to adjust the valve clearance (see Valve Clearance Adjustment).

Valve Seat Repair

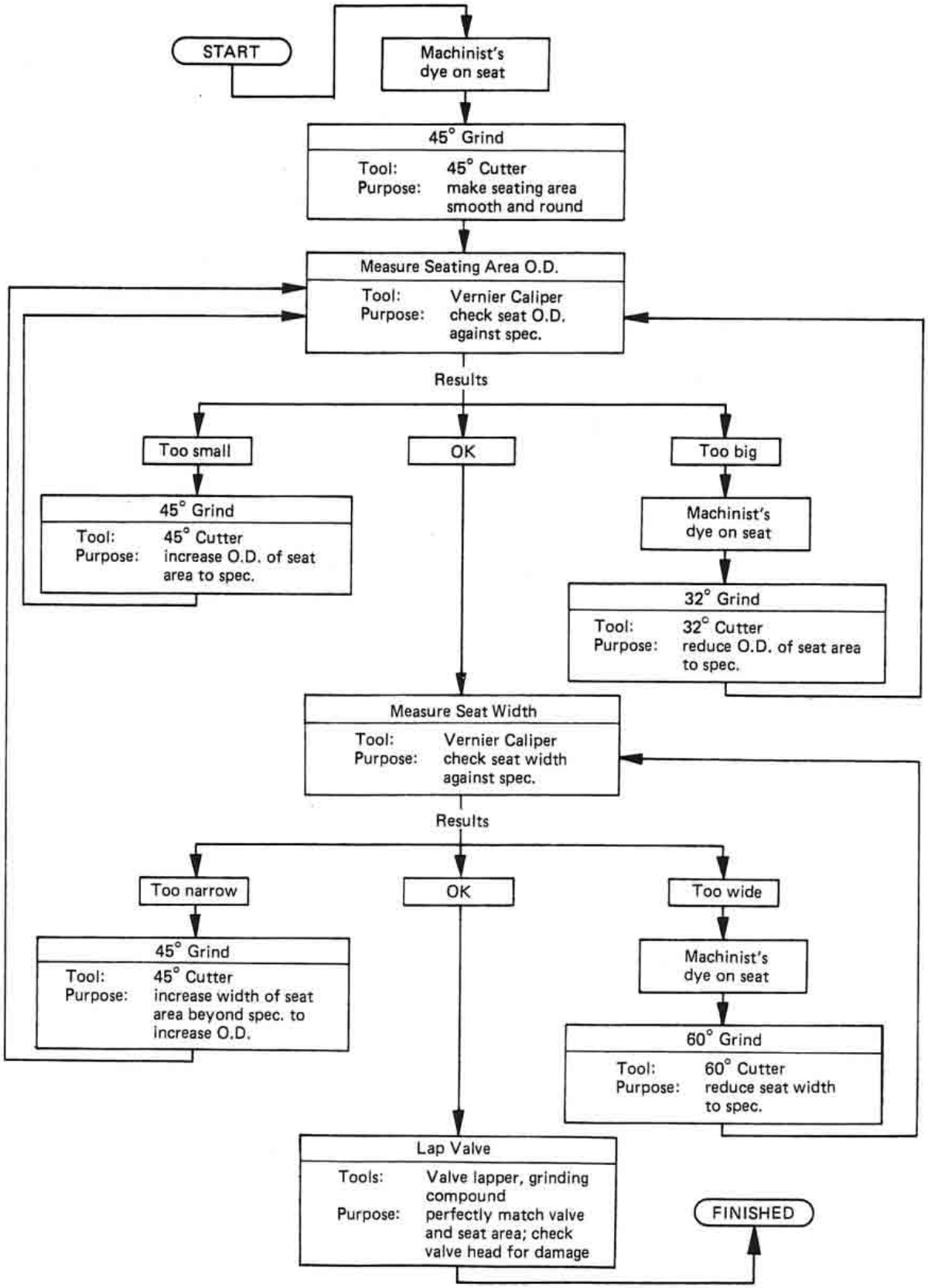

Cylinder, Pistons

Cylinder Removal

- Remove:
  - Cylinder Head (see Cylinder Head Removal)
  - Water Hose [A]
  - Front Camshaft Chain Guide
  - Engine Mounting Bolt and Bracket
- Remove the cylinder.

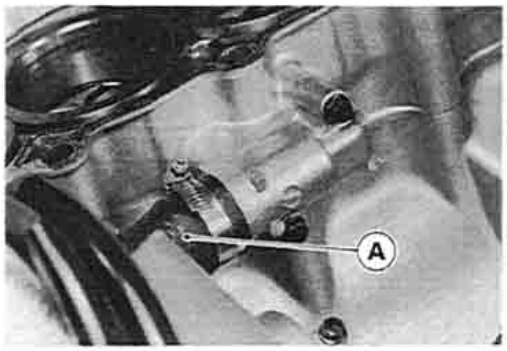

Cylinder Installation

- Install the new cylinder gasket.
- Apply engine oil to the cylinder bore.
- Prepare two auxiliary head bolts with their head cut.
- Install the two bolts [A] diagonally in the crankcase.
- Level the pistons.
- Install the cylinder block [B].
- Install the engine mounting bracket and bolt.

Torque – Engine Mounting Bracket Bolt: 23 N-m (2.3 kg-m, 16.5 ft-lb)
Engine Mounting Bolt: 44 N-m (4.5 kg-m, 33 ft-lb)

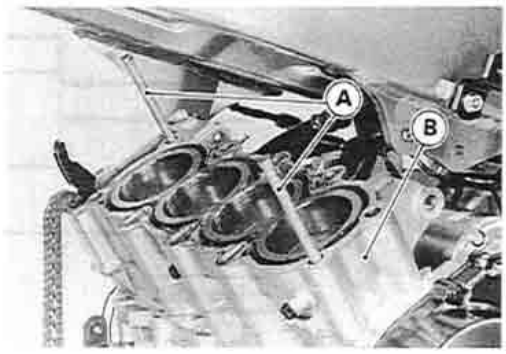

Piston Removal

- Remove the cylinder (see Cylinder Removal).
- Place a clean cloth under the pistons and remove the piston pin snap ring from the outside of each piston.
- Remove the piston pins.

Special Tool – Piston Pin Puller Assembly: 57001-910 [A]

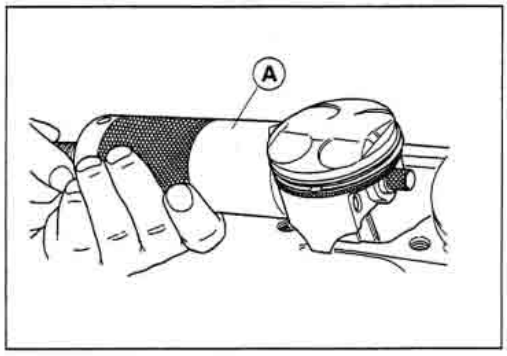

- Carefully spread the ring opening with your thumbs and then push up on the opposite side of the ring [A] to remove it.
- Remove the 3-piece oil ring with your thumbs in the same manner.

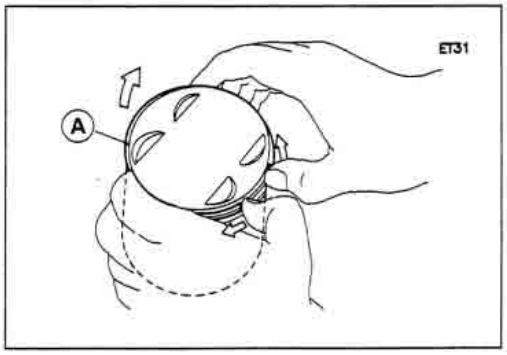

Piston Installation

- Do not mix up the top and second ring.
- ○ Install the top ring [A] so that the "R" mark [B] faces up.
- ○ Install the second ring [C] so that the "RN" mark [D] faces up.

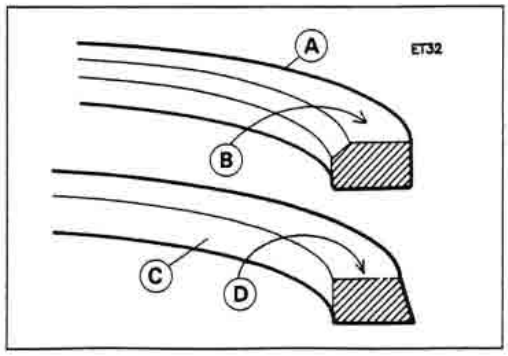

- The piston ring openings must be positioned as shown in the figure. The openings of the oil ring steel rails must be about 30 – 40° of angle from the opening of the top ring.

[A] Top Ring
[B] Second Ring
[C] Oil Ring Steel Rails
[D] Oil Ring Expander
[E] Arrow

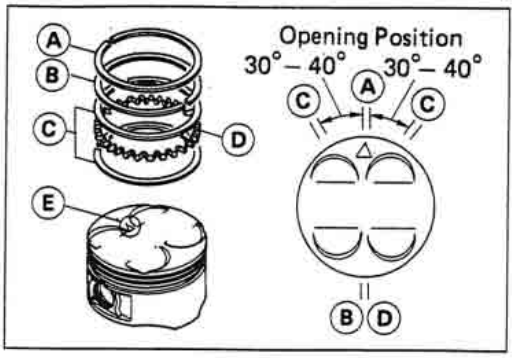

- The arrow on the piston head must point toward the front of the engine.

CAUTION
Do not reuse snap rings, as removal weakens and deforms them. They could fall out and score the cylinder wall.

Cylinder Wear

- Since there is a difference in cylinder wear in different directions, take a side-to-side and a front-to-back measurement at each of the two locations (total of four measurements) shown in the figure.

★If any of the cylinder inside diameter measurements exceeds the service limit, the cylinder will have to be bored to oversize and then honed.

[A] 10 mm
[B] 60 mm

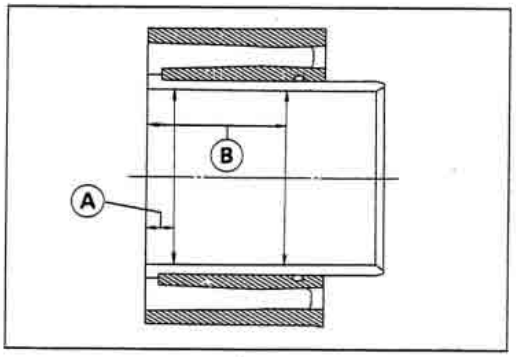

Cylinder Inside Diameter

Standard:	**66.000 ~ 66.012 mm**
Service Limit:	**66.10 mm**

Piston Wear

- Measure the outside diameter [A] of each piston 5 mm [B] up from the bottom of the piston at a right angle to the direction of the piston pin.

★If the measurement is under service limit, replace the piston.

Piston Diameter

Standard:	**65.940 ~ 65.960 mm**
Service Limit:	**65.79 mm**

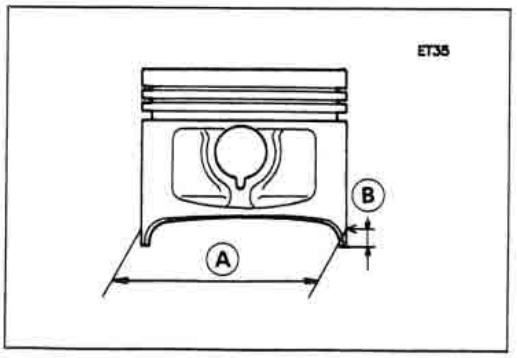

Piston Ring, Piston Ring Groove Wear

- Check for uneven groove wear by inspecting the ring seating.

★The rings should fit perfectly parallel to groove surfaces. If not, the piston must be replaced.

- With the piston rings in their grooves, make several measurements with a thickness gauge [A] to determine piston ring/groove clearance.

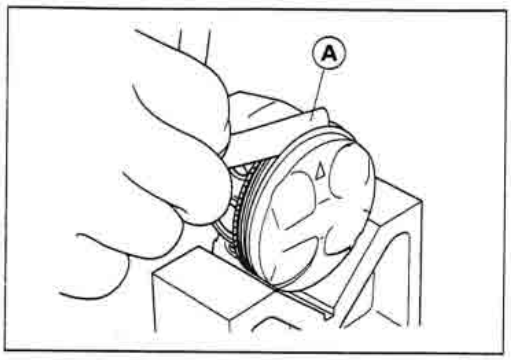

Piston Ring/Groove Clearance

	Standard	Service Limit
Top	**0.05 ~ 0.09 mm**	**0.19 mm**
Second	**0.03 ~ 0.07 mm**	**0.17 mm**

Piston Ring End Gap

- Place the piston ring [A] inside the cylinder, using the piston to locate the ring squarely in place. Set it close to the bottom of the cylinder, where cylinder wear is low.
- Measure the gap [B] between the ends of the ring with a thickness gauge.

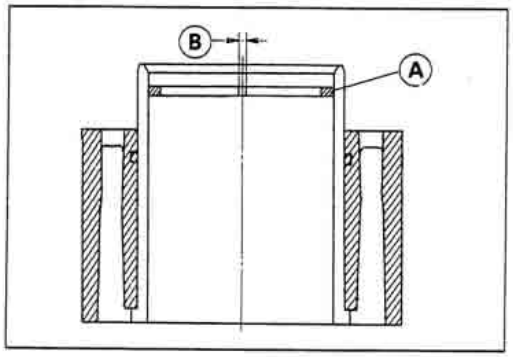

Piston Ring End Gap

	Standard	Service Limit
Top	**0.15 ~ 0.30 mm**	**0.6 mm**
Second	**0.30 ~ 0.45 mm**	**0.8 mm**

Carburetor Holder

Carburetor Holder Installation

- Install the carburetor holder as shown in the figure.
  [A] Stoppers for #1, #2 Carburetor Clamps
  [B] Stoppers for #3, #4 Carburetor Clamps
- Tighten the carburetor holder bolts.

Torque – Carburetor Holder Bolts: 12 N-m (1.2 kg-m, 104 in-lb)

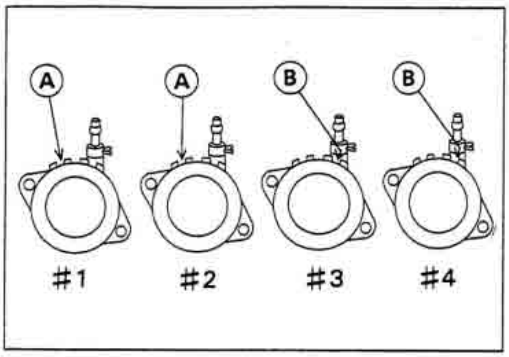

Muffler

Muffler Removal

- Remove:
  Lower Fairings (see Frame chapter)
  Bracket Bolts [A]
- Loosen the radiator bolts [B].

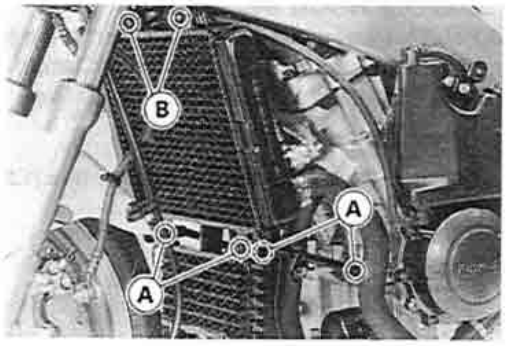

- Move the bottom of the radiator toward the front [A], and then tighten the radiator bolts [B].
- Remove:
  Holder Nuts [C]
  Exhaust Pipe Holders [D]

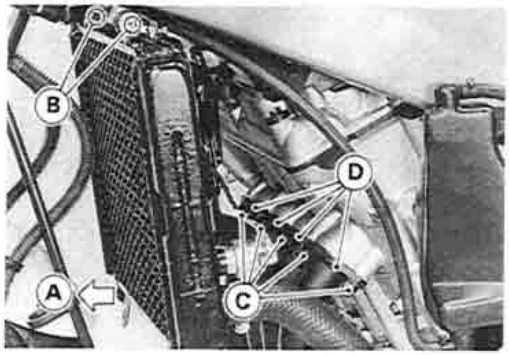

- Remove the clamp bolt [A].

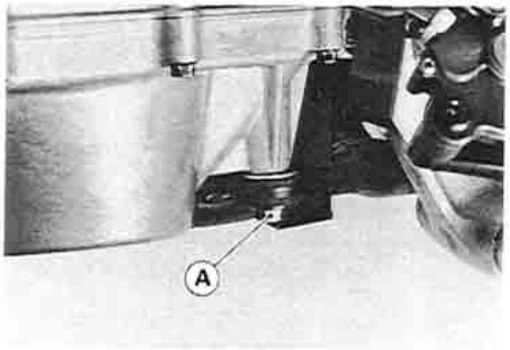

- Remove:
  Muffler Mounting Bolt and Nut [A]
  Muffler Assembly [B]

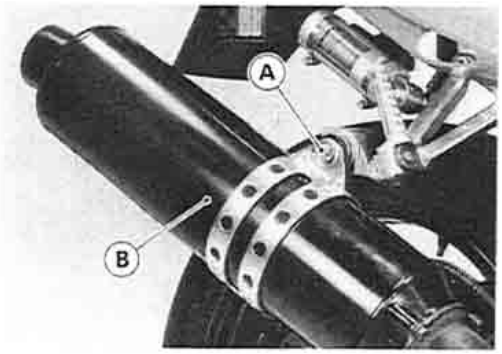

Muffler Installation

- Replace the exhaust pipe gaskets with new ones.
- Tighten the clamp bolt and connection bolts.

Torque – Exhaust Pipe Clamp Bolt : 34 N-m (3.5 kg-m, 25 ft-lb)
Muffler and Exhaust Pipe Connection Bolts : 34 N-m (3.5 kg-m, 25 ft-lb)

Clutch

Table of Contents

Exploded View

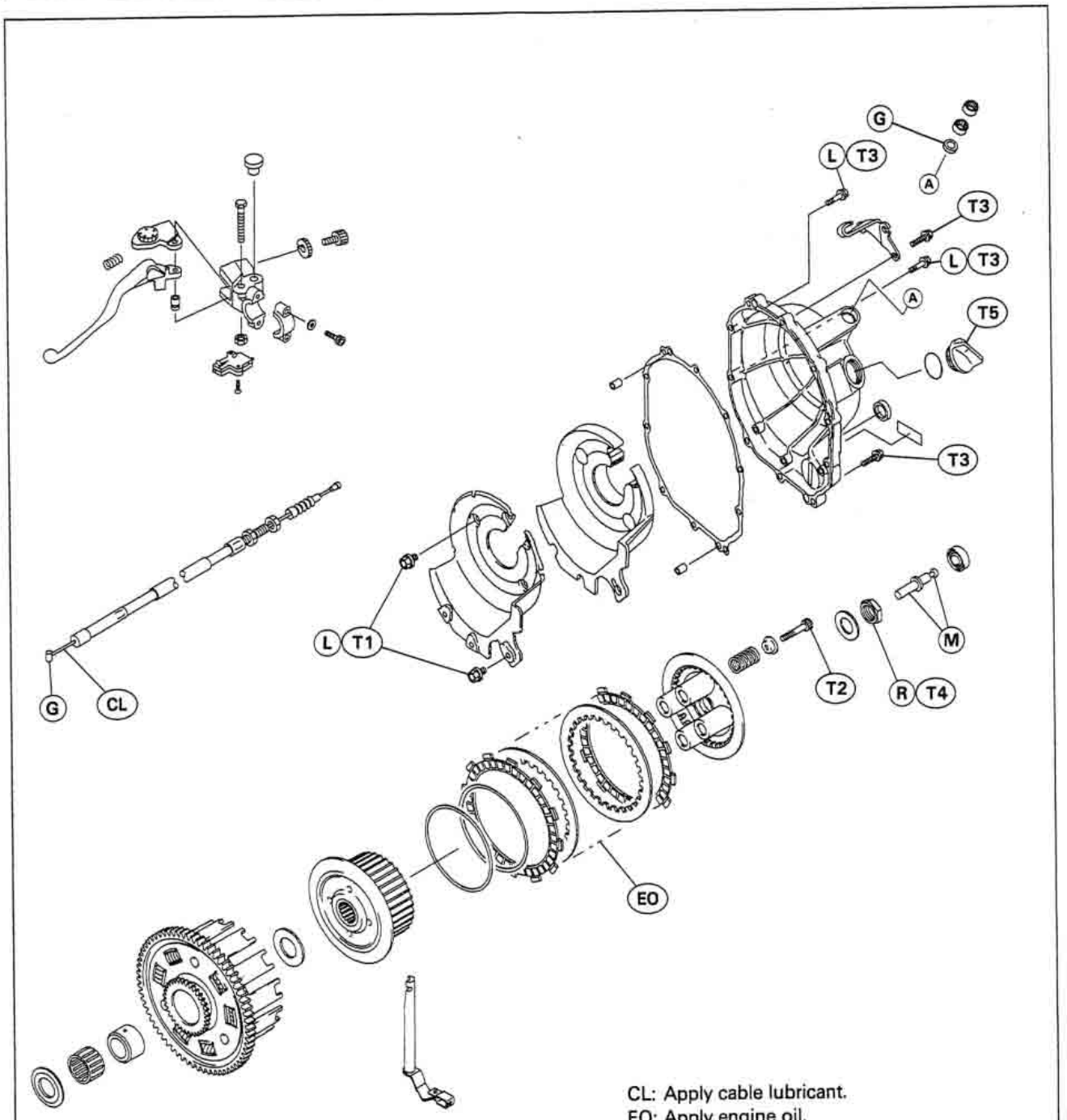

CL: Apply cable lubricant.
EO: Apply engine oil.
L: Apply a non-permanent locking agent.
M: Apply molybdenum disulfide grease.
R: Replacement Parts

T1: 5.9 N-m (0.60 kg-m, 52 in-lb)
T2: 8.8 N-m (0.90 kg-m, 78 in-lb)
T3: 12 N-m (1.2 kg-m, 104 in-lb)
T4: 130 N-m (13.5 kg-m, 98 in-lb)
T5: 1.5 N-m (0.15 kg-m, 13 in-lb) or Hand-Tight

Specifications

Item	Standard	Service Limit
Clutch Lever Position	5-way adjustable (to suit rider)	– – –
Clutch Lever Free Play	2 ~ 3 mm	– – –
Clutch:		
Friction plate thickness	2.72 ~ 2.88 mm	2.2 mm
Friction and steel plate warp	0.2 mm or less	0.3 mm
Clutch spring free length	82.1 mm	78.0 mm

Special Tools – Clutch Holder: 57001-1243
Pressure Cable Luber: k56019-021

Sealant – Kawasaki Bond (Silicone Sealant): 56019-120

Clutch Lever and Cable

Lever Free Play Inspection

- Pull the clutch lever just enough to take up the free play [A].
- Measure the gap between the lever and the lever holder.

★If the gap is too wide, the clutch may not release fully. If the gap is too narrow, the clutch may not engage fully. In either case, adjust it.

Clutch Lever Free Play
Standard: 2 ~ 3 mm

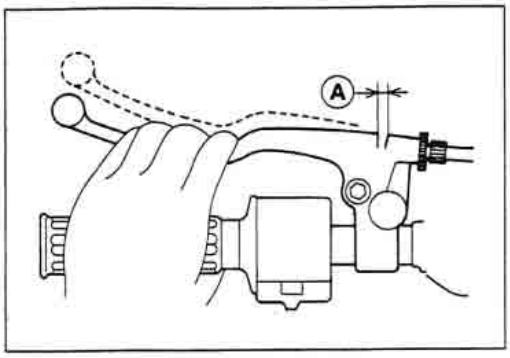

Lever Free Play Adjustment

⚠WARNING

To avoid a serious burn, never touch the engine or exhaust pipe during clutch adjustment.

- Loosen the knurled locknut [A] at the clutch lever.
- Turn the adjuster [B] so that 5 ~ 6 mm [C] of threads are visible.

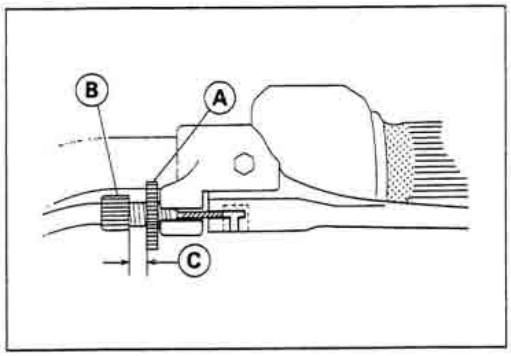

- Slide the dust cover [A] at the clutch cable lower end out of place.
- Loosen both adjusting nuts [B] at the clutch cover as far as they will go.
- Pull the clutch outer cable [C] tight and tighten the adjusting nuts against the bracket [D].
- Slip the rubber dust cover back onto place.
- Turn the adjuster at the clutch lever until the free play is correct.
- Tighten the knurled locknut at the clutch lever.

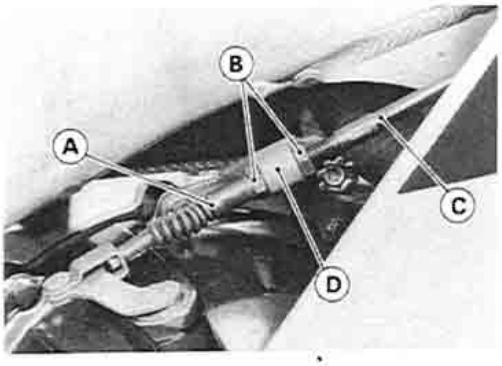

- Push the release lever [A] toward the front of the motorcycle until it becomes hard to turn.

○At this time, the release lever should have the proper angle shown.

★If the angle is wrong, check the clutch and release parts for wear.

⚠WARNING

Be sure that the outer cable end at the clutch lever is fully seated in the adjuster at the clutch lever, or it could slip into place later, creating enough cable play to prevent clutch disengagement.

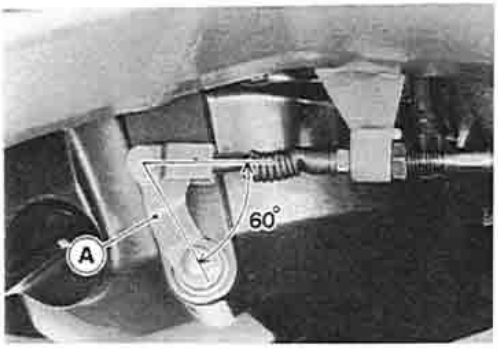

- After the adjustment, start the engine and check that the clutch does not slip and that it releases properly.

Cable Removal

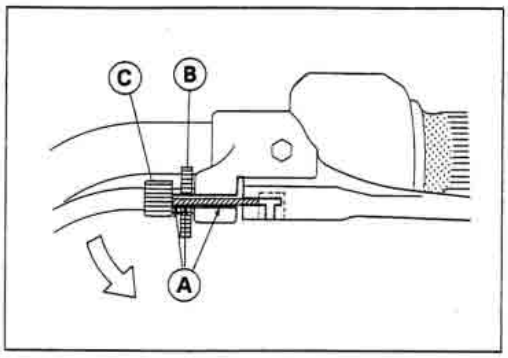

- Remove the right lower fairing (see frame chapter).
- Slide the dust cover at the clutch cable lower end out of place.
- Loosen the nuts, and slide the lower end of the clutch cable to give the cable plenty of play.
- Push the lever forward and turn the adjuster to align the Number **5** with the triangular mark on the lever holder.
- Loosen the knurled locknut at the clutch lever, and screw in the adjuster.
- Line up the slots [A] in the clutch lever, knurled locknut [B], and adjuster [C], and then free the cable from the lever.
- Free the clutch inner cable tip from the clutch release lever.
- Push the release lever toward the front of the motorcycle and tape the release lever to the clutch cover to prevent the release shaft from falling out.
- Pull the clutch cable out of the frame.

Cable Installation

- Run the clutch cable correctly (see General Information chapter).
- Adjust the clutch cable (see Lever Free Play Adjustment).

Cable Lubrication

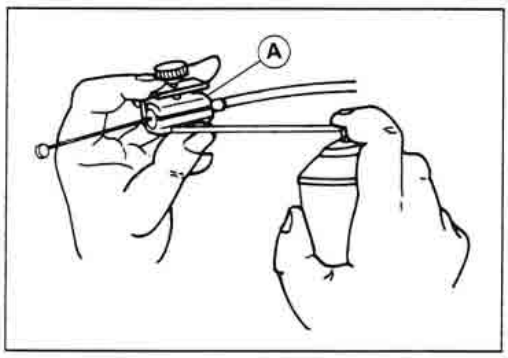

Whenever the clutch cable is removed, lubricate the clutch cable as follows.

- Apply a thin coating of grease to the cable upper and lower ends.
- Lubricate the cable with a penetrating rust inhibitor.

Special Tool – Pressure Cable Luber: k56019-021 [A]

Clutch Lever Installation

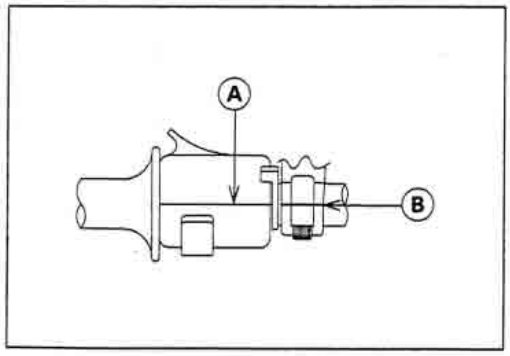

- Install the clutch lever so that the mating surface [A] of the switch housing is aligned with the mating surface [B] of the clutch lever clamp.

Clutch Cover

Clutch Cover Removal

- Remove:
  Engine Oil (drain, see Engine Lubrication System chapter)
  Right Lower Fairing (see Frame chapter)
  Clutch Cable Lower End [A]
  Clutch Cover Mounting Bolts [B]

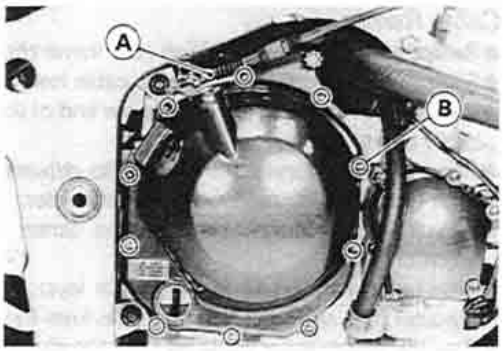

- Turn the release lever [A] toward the rear as shown, and remove the clutch cover [B].
  [C] about 90°

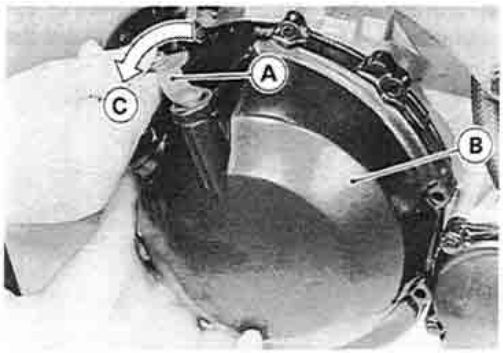

Clutch Cover Installation

- Apply silicone sealant to the area [A] where the mating surface of the crankcase touches the clutch cover gasket.

  Sealant – Kawasaki Bond (Silicone Sealant): 56019-120

- Replace the cover gasket with a new one.
- Apply a non-permanent locking agent to the threads of the two clutch cover bolts [B].
- Tighten the cover bolts.

  Torque – Clutch Cover Bolts: 1.2 N-m (12 kg-m, 104 in-lb)

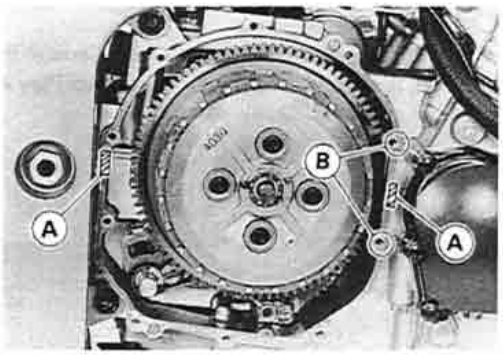

Release Shaft Removal

CAUTION
Do not remove the clutch release lever and shaft assembly unless it is absolutely necessary. If removed, the oil seal replacement may be required.

- Remove the clutch cover (see Clutch Cover Removal).
- Pull the lever and shaft assembly out of the clutch cover.

Release Shaft Installation

- Apply high-temperature grease to the oil seal lips on the lower ridge of the clutch cover.
- Apply oil to the bearing in the hole of the clutch cover.
- Insert the release shafts straight into the upper hole of the clutch cover.

CAUTION
When inserting the release shaft, be careful not to remove the spring of the oil seal.

Clutch

Clutch Removal

- Remove:
  - Engine Oil (drain, see Engine Lubrication System chapter)
  - Right Lower Fairing (see Frame chapter)
  - Clutch Cover (see Clutch Cover Removal)
  - Clutch Spring Bolts [A]
  - Clutch Springs
  - Clutch Spring Plate [B] (with thrust bearing and pusher [C])

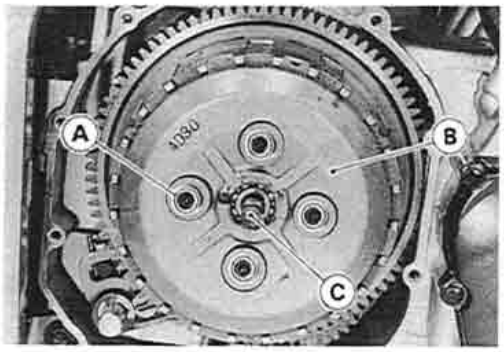

  - Friction Plates, Steel Plates
  - Spring, Spring Seat
  - Clutch Hub Nut [A]

○ Holding the clutch hub [B], remove the nut.

Special Tool – Clutch Holder: 57001-1243 [C]

- Remove:
  - Clutch Hub

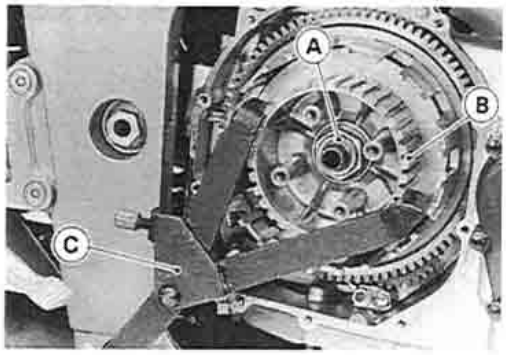

- Using the two 4 mm screws [A], pull out the sleeve [B], needle bearing [C] and clutch housing [D].
- Remove the spacer.

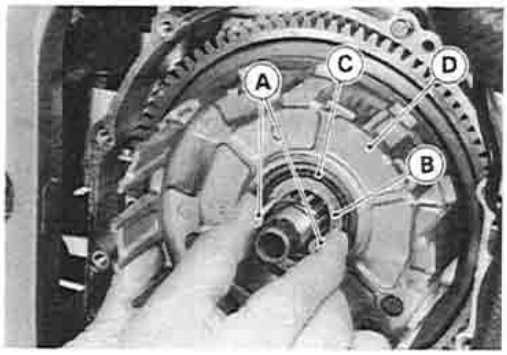

Clutch Installation

- Install the following parts on the drive shaft.
  - [A] Spacer
  - [B] Sleeve
  - [C] Needle Bearing
  - [D] Clutch Housing
  - [E] Spacer
  - [F] Clutch Hub
  - [G] Washer
  - [H] Nut

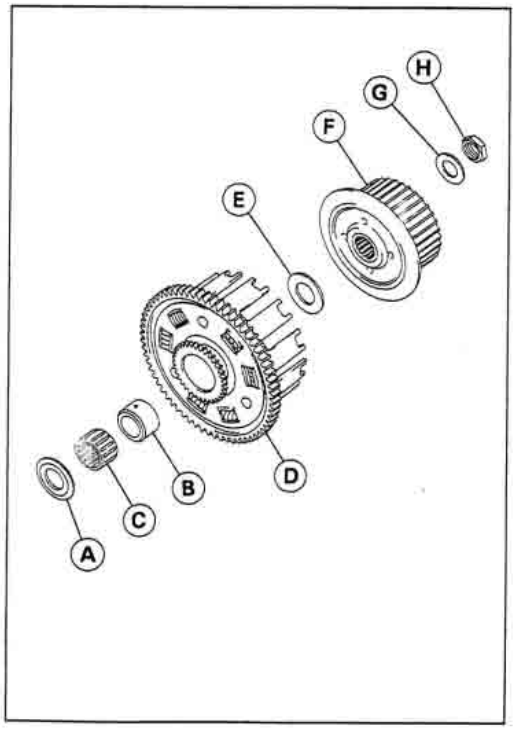

○ Install the spacer [A] so that the stepped side [B] faces inward.

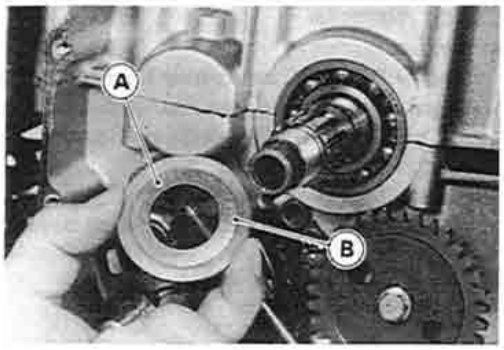

○ Install the washer [A] so that the OUT SIDE mark faces outward.

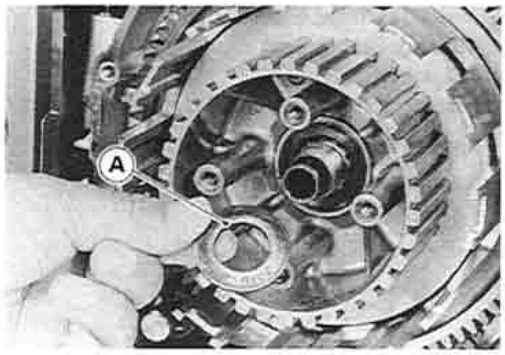

○ Replace the clutch hub nut with a new one.
○ Holding the clutch hub, tighten the clutch hub nut.

Special Tool – Clutch Holder: 57001-1243

Torque – Clutch Hub Nut: 130 N-m (13.5 kg-m, 98 ft-lb)

● Install the spring seat [A] and spring [B] as shown.
[C] Clutch Hub

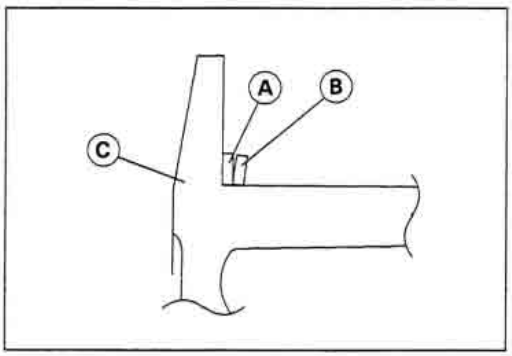

● Install the friction plates and steel plates, starting with a friction plate and alternating them.

CAUTION
If new dry friction plates and steel plates are installed, apply engine oil to the surfaces of each plate to avoid clutch plate seizure.

○ Install the last friction plate [A] fitting the tangs in the grooves in the housing as shown.

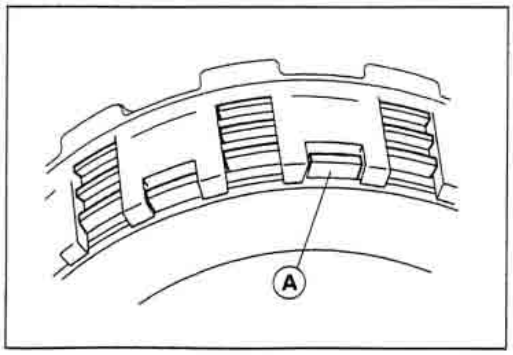

- Apply molybdenum disulfide grease to the pusher end [A] and install the pusher [B] and bearing [C] in the clutch spring plate [D].

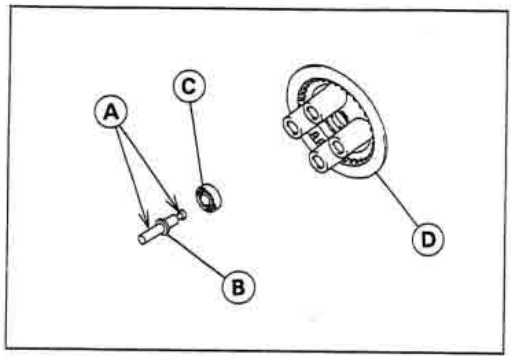

- Install the clutch spring plate and spring, and tighten the clutch spring bolts.

Torque – Clutch Spring Bolts: 8.8 N-m (0.90 kg-m, 78 in-lb)

- Install the clutch cover (see Clutch Cover Installation).

Clutch Plate, Wear, Damage Inspection

- Visually inspect the friction and steel plates for signs of seizure, overheating (discoloration), or uneven wear.
- Measure the thickness of the friction plate [A] at several points.

★If any plates show signs of damage, or if they have worn past the service limit, replace them with new ones.

Friction Plate Thickness

Standard:	**2.72 ~ 2.88 mm**
Service Limit:	**2.2 mm**

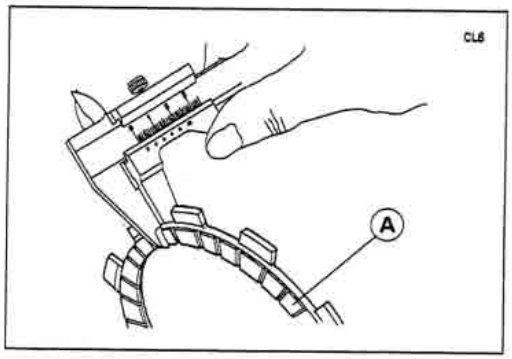

Clutch Plate Warp Inspection

- Place each friction plate or steel plate on a surface plate and measure the gap between the surface plate [A] and each friction plate or steel plate [B] with a thickness gauge [C]. The gap is the amount of friction or steel plate warp.

★If any plate is warped over the service limit, replace it with a new one.

Friction and Steel Plate Warp

Standard:	**0.2 mm or less**
Service Limit:	**0.3 mm**

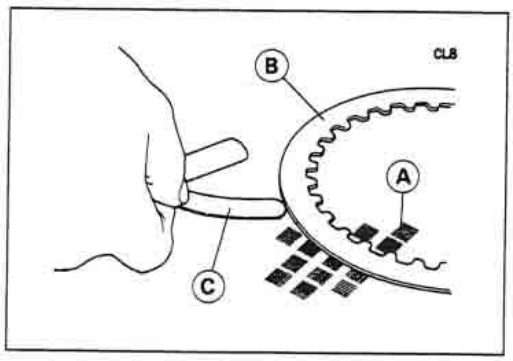

Clutch Spring Free Length Measurement

- Measure the free length of the clutch springs [A].

★If any spring is shorter than the service limit, it must be replaced.

Clutch Spring Free Length

Standard:	**82.1 mm**
Service Limit:	**78.0 mm**

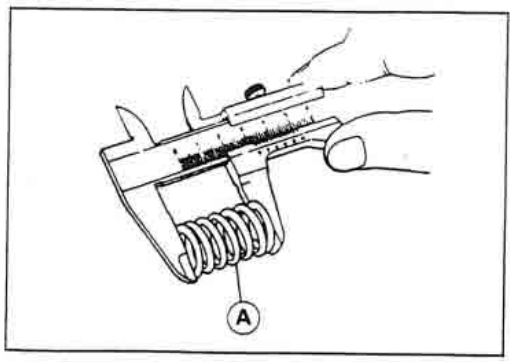

Engine Lubrication System

Table of Contents

Exploded View

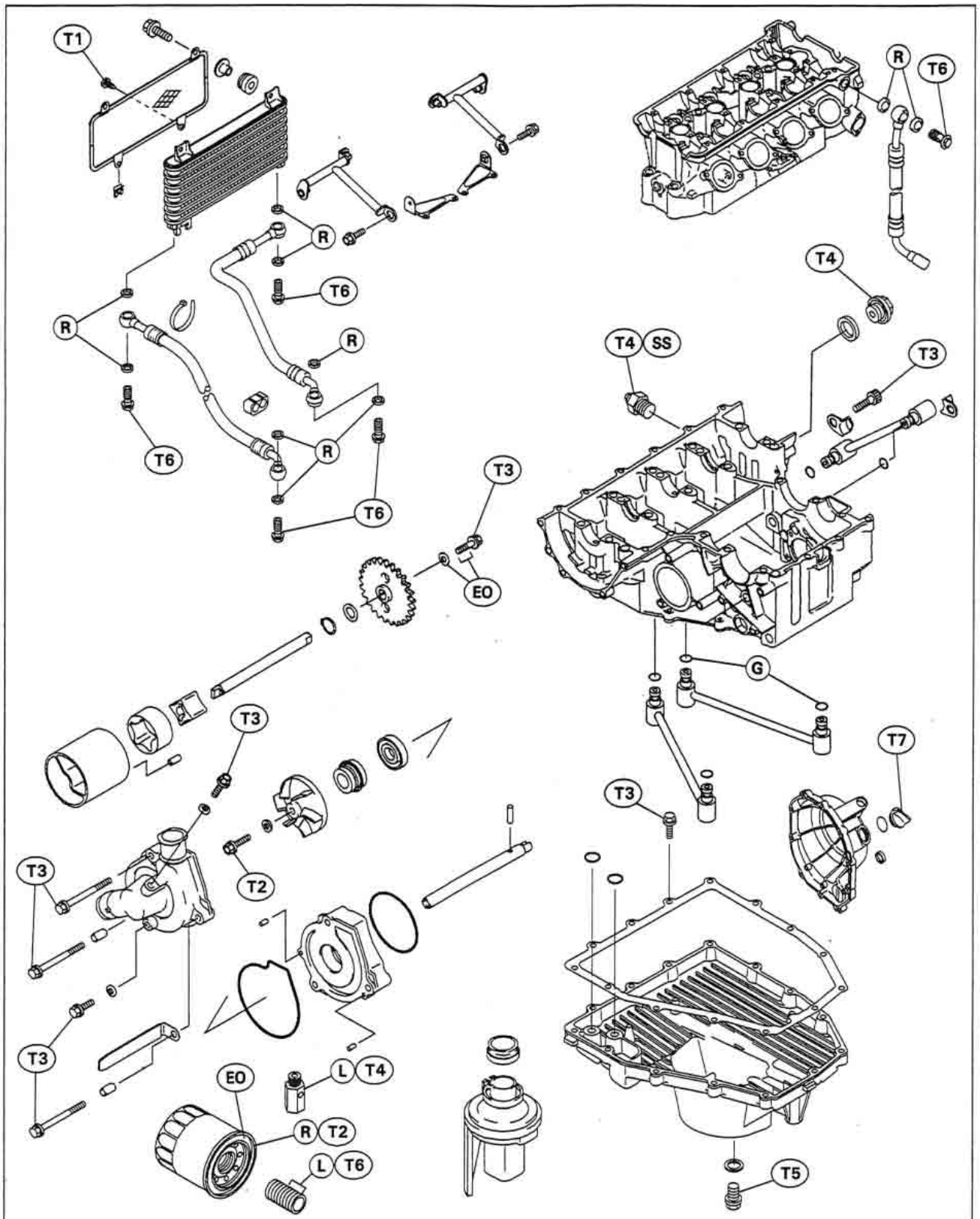

T1: 5.4 N-m (0.55 kg-m, 48 in-lb)
T2: 9.8 N-m (1.0 kg-m, 87 in-lb)
T3: 12 N-m (1.2 kg-m, 104 in-lb)
T4: 15 N-m (1.5 kg-m, 11.0 ft-lb)
T5: 20 N-m (2.0 kg-m, 14.5 ft-lb)
T6: 25 N-m (2.5 kg-m, 18.0 ft-lb)
T7: 1.5 N-m (0.15 kg-m, 13 in-lb) or Hand-Tight
SS: Apply silicone sealant.
L: Apply a non-permanent locking agent.
R: Replacement Parts
G: Apply grease.
EO: Apply engine oil.

Engine Oil Flow Chart

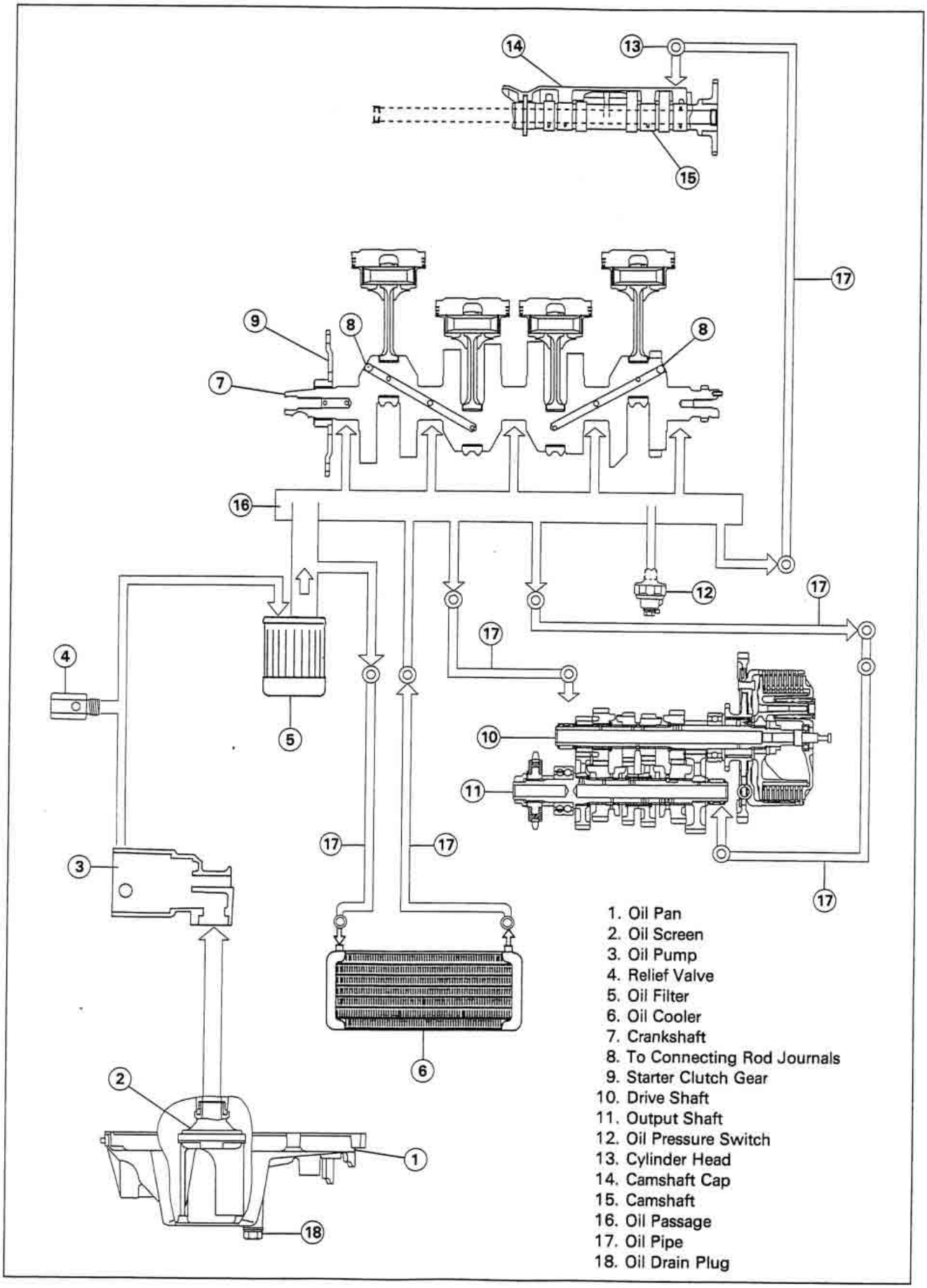

Specifications

Item	Standard
Engine Oil:	
Grade	SE, SF, or SG class
Viscosity	SAE 10W-40, 10W-50, 20W-40, or 20W-50
Capacity	3.4L (when filter is not removed) 3.6L (when filter is removed) 4.0L (when engine is completely dry)
Level	Between upper and lower level lines
Oil Pressure Measurement:	
Oil pressure @4,000 r/min(rpm), oil temp. 90°C(194°F)	120 ~ 180 kPa(1.2 ~ 1.8 kg/cm², 17 ~ 26 psi)

Special Tools – Oil Filter Wrench: 57001-1249
Oil Pressure Gauge, 10 kg/cm²: 57001-164
Oil Pressure Gauge Adapter, M18 x 1.5: 57001-1278
Circlip Pliers: 57001-154

Sealant – Kawasaki Bond (Silicone Sealant): 56019-120

Engine Oil and Oil Filter

⚠WARNING

Motorcycle operation with insufficient, deteriorated, or contaminated engine oil will cause accelerated wear and may result in engine or transmission seizure, accident, and injury.

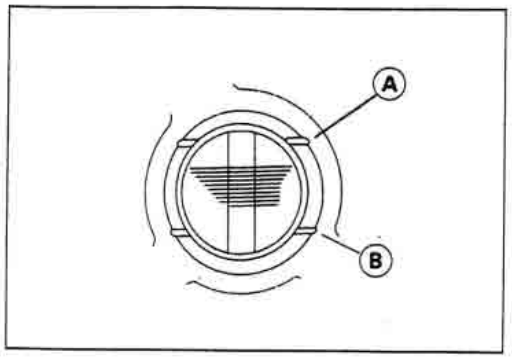

Oil Level Inspection

- Check that the engine oil level is between the upper [A] and lower [B] levels in the gauge.

NOTE

- ○ *Situate the motorcycle so that it is perpendicular to the ground.*
- ○ *If the motorcycle has just been used, wait several minutes for all the oil to drain down.*
- ○ *If the oil has just been changed, start the engine and run it for several minutes at idle speed. This fills the oil filter with oil. Stop the engine, then wait several minutes until the oil settles.*

CAUTION

Racing the engine before the oil reaches every part can cause engine seizure.
If the engine oil gets extremely low or if the oil pump or oil passages clog up or otherwise do not function properly, the oil pressure warning light will light. If this light stays on when the engine is running above idle speed, stop the engine immediately and find the cause.

Engine Oil Change

- Support the motorcycle perpendicular to the ground after warming up the engine.
- Remove the engine drain plug [A] to drain the oil.
- ○ The oil in the oil filter can be drained by removing the filter (see Oil Filter Change).
- ★ Replace the drain plug gasket [B] with a new one if it is damaged.
- Tighten the drain plug.

Torque – Engine Drain Plug: 20 N-m (2.0 kg-m, 14.5 ft-lb)

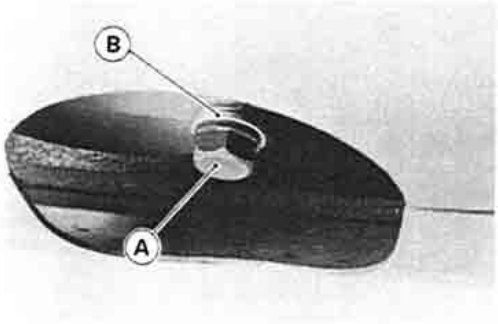

- Pour in the specified type and amount of oil.

Engine Oil

Grade:	**SE, SF or SG class**
Viscosity:	**SAE 10W40, 10W50, 20W40, or 20W50**
Amount:	**3.4 L (when filter is not removed)**
	3.6 L (when filter is removed)
	4.0 L (when engine is completely dry)

Oil Filter Change

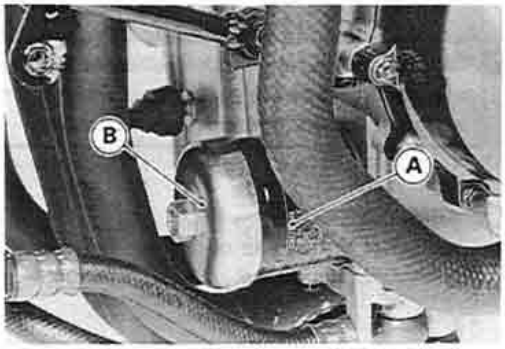

- Drain the engine oil (see Engine Oil Change).
- Remove:
  Left Lower Fairing (see Frame chapter)
- Remove the oil filter [A] with the oil filter wrench [B].

Special Tool – Oil Filter Wrench: 57001-1249

- Replace the filter with a new one.
- Apply engine oil to the gasket before installation.
- Tighten the filter with the oil filter wrench or with hands about ¾ turns after the gasket contacts the mounting surface of the engine.

Torque – Oil Filter: 9.8 N-m (1.0 kg-m, 87 in-lb)

- Pour in the specified type and amount of oil (see Engine Oil Change).

Oil Cooler

Oil Cooler Removal

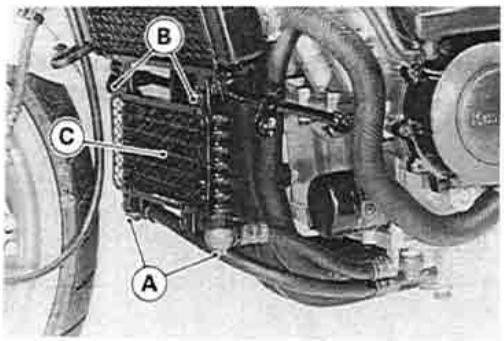

- Remove:
  - Engine Oil (drain, see Engine Oil Change)
  - Lower Fairings (see Frame chapter)
  - Banjo Bolts [A]
  - Mounting Bolts [B]
  - Oil Cooler [C]

Oil Cooler Installation

- Installation is the reverse of removal. Note the following.
- Replace the washers on each side of the banjo bolts with new ones if the banjo bolt was removed.
- Tighten the banjo bolts.

Torque – Oil Hose Banjo Bolts: 25 N-m (2.5 kg-m, 18.0 ft-lb)

Oil Cooler Inspection

- Check the oil cooler.

★If there are obstructions to air flow, remove them.

★If the corrugated fins are deformed, carefully straighten them with blade of a thin screw driver.

CAUTION
Do not tear the cooler tubes while straightening the fins.

★If the air of the cooler core are blocked by unremovable obstructions or irreparably deformed fins, replace the oil cooler.

CAUTION
When cleaning the oil cooler with compressed air, be careful of the following to avoid damage to the fins. **Keep the air nozzle [A] over 0.5 m (20 in.) [B] away from the oil cooler.** **Blow air perpendicularly to the cooler core.** **Never blow air at an angle against the fins but straight through them in the direction if natural air flow.** **Never shake the air nozzle at a right angle against the fins; be sure to move it at a level with the fins.**

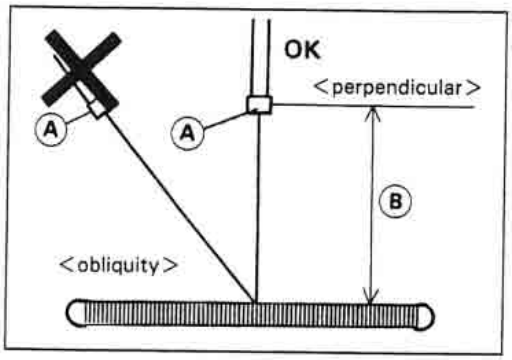

Oil Pan

Oil Pan Removal

- Remove:
  - Engine Oil (drain, see Engine Oil Change)
  - Muffler (see Engine Top End chapter)
  - Oil Cooler Hoses [A]
  - Oil Pan Bolts [B]
  - Oil Pan [C]

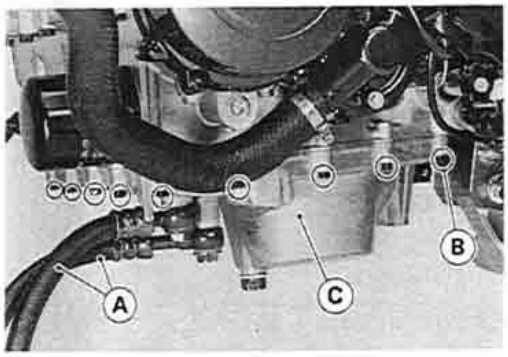

Oil Pan Installation

- Clean the oil screen [A].
- Install the oil screen so that the crankcase rib [B] fits the slot [C] of the oil screen.
- Replace the oil pan gasket with a new one.
- Replace the O-rings [D] with new ones if they are damaged.
- Apply a non-permanent locking agent to the threads of the relief valve [E], and tighten it.

Torque – Oil Pressure Relief Valve: 15 N-m (1.5 kg-m, 11.0 ft-lb)

- Tighten the oil pan bolts.

Torque – Oil Pan Bolts: 12 N-m (1.2 kg-m, 104 in-lb)

- Replace the wasehrs on each side of the banjo bolts with new ones.
- Tighten the oil cooler hose banjo bolts.

Torque – Oil Hose Banjo Bolts: 25 N-m (2.5 kg-m, 18.0 ft-lb)

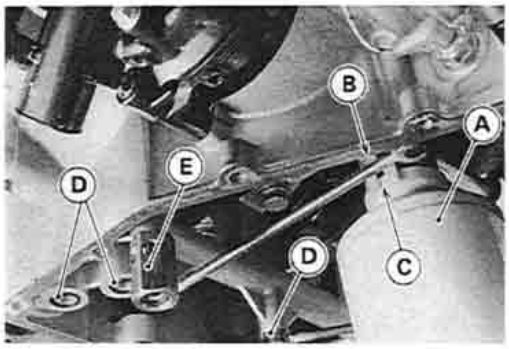

Oil Pump, Oil Pump Drive Gear

Oil Pump Removal

- Drain:
  - Coolant (see Cooling System chapter)
  - Engine Oil (see Engine Oil Change)
- Remove:
  - Water Hoses [A]
  - Bolts [B] and Clamp [C]
  - Water Pump Cover [D]

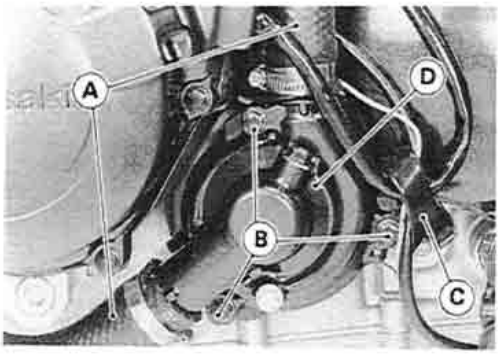

Impeller Bolt [A]
Impeller [B]

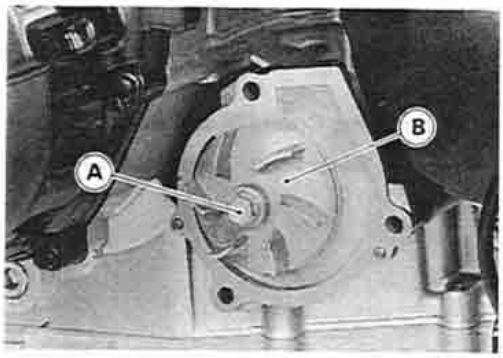

Water Pump Body [A]
Oil Pump Cover [B]
Oil (Water) Pump Shaft [C]
Outer rotor [D] and Inner Rotor

NOTE

○ *The oil (water) pump assembly can easily be removed by installing water pump cover bolt [E] into the oil (water) pump shaft and pulling them.*

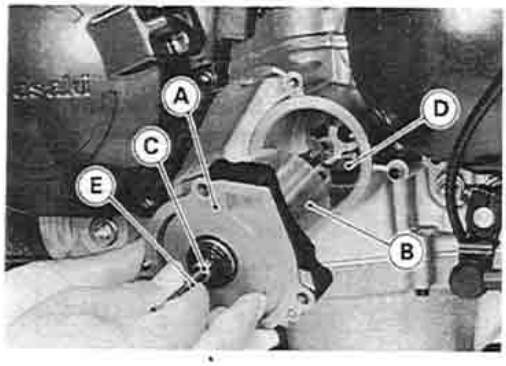

Oil Pump Installation

- Install the outer rotor [A] in to the crankcase.
- Install the pin [B], inner rotor [C] and oil (water) pump shaft [D].
- ○ Turn the pump shaft so that the slot [E] in its shaft fits onto the projection [F] of the pump drive gear shaft.

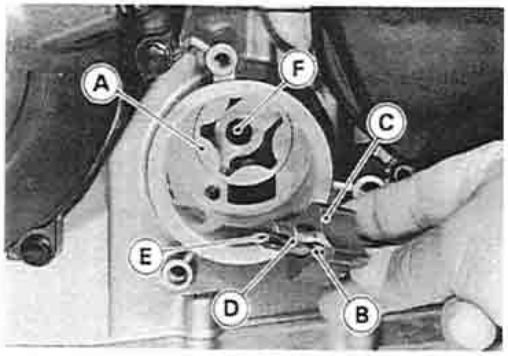

- Fit the pin [A] of the oil pump cover [B] into the hole [C] in the crankcase.

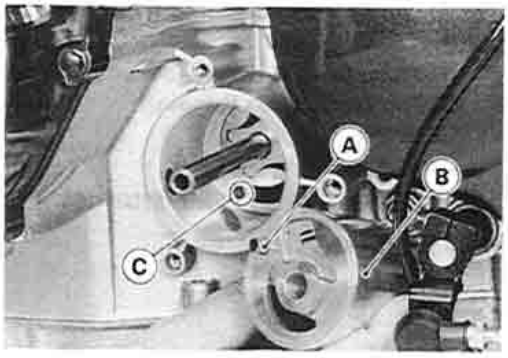

- Install:
  Pins [A]
  Water Pump Body [B]

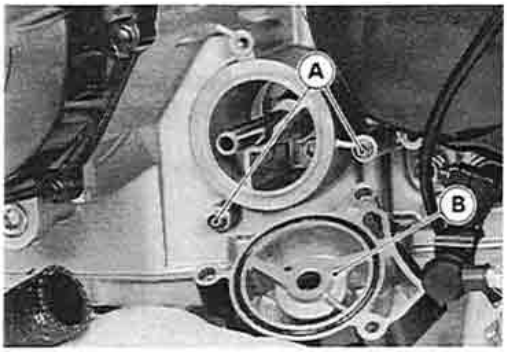

Impeller [A] and Bolt [B]

Torque – Impeller Bolt: 9.8 N-m (1.0 kg-m, 87 in-lb)

Pins [C]
Water Pump Cover [D] and Bolts

Torque – Water Pump Cover Bolts: 12 N-m (1.2 kg-m, 104 in-lb)

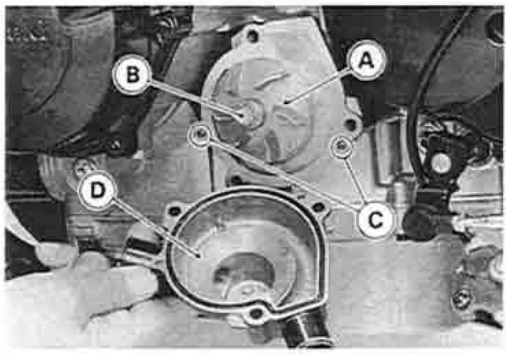

Oil Pump Drive Gear Removal

- Remove:
  Clutch (see Clutch chapter)
  Oil Pipe and Shift Shaft (see External Shift Mechanism Removal in Crankshaft/Transmission chapter)
- Hold the oil pump drive gear [A] by using a suitable gear [B].
- Unscrew the gear bolt [C], then remove the gear.

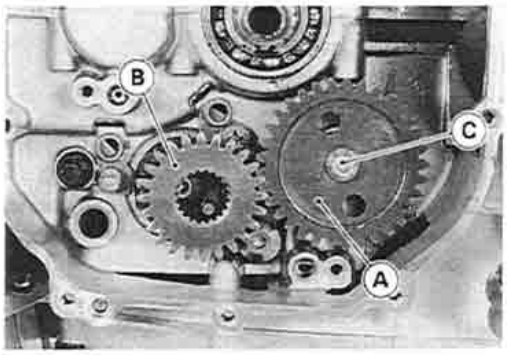

Oil Pump Drive Gear Installation

- Apply engine oil to both sides of the oil pump drive gear bolt washer.
- Using a suitable gear [A] tighten the gear bolt [B].

Torque – Oil Pump Drive Gear Bolt: 12 N-m (1.2 kg-m, 104 in-lb)

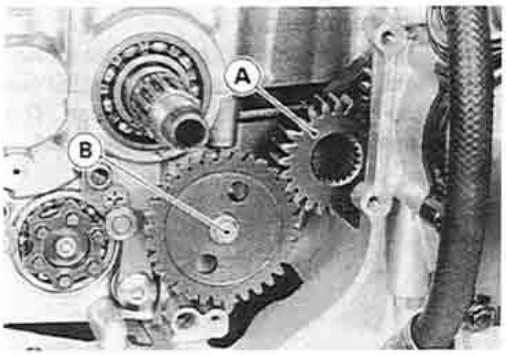

Oil Pump Drive Gear Shaft Removal

- Remove:
  Oil Pump Drive Gear (see Oil Pump Drive Gear Removal)
  Oil Pan (see Oil Pan Removal)
  Oil Screen
  Circlip [A] and Washer [B]

Special Tool – Circlip Pliers: 57001-154

Oil Pump Drive Gear Shaft [C]

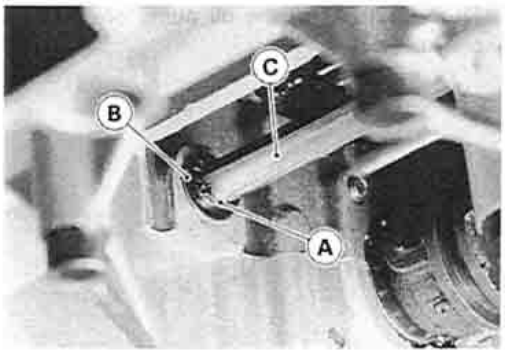

Oil Pump Drive Gear Shaft Installation

- Install the circlip [A] into the groove [B] of the oil pump drive gear shaft.

  Special Tool – Circlip Pliers: 57001-154

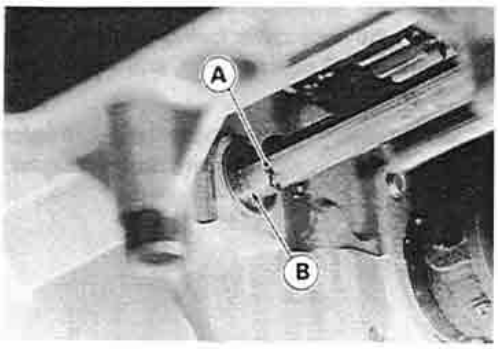

Oil Pressure Measurement

Oil Pressure Measurement

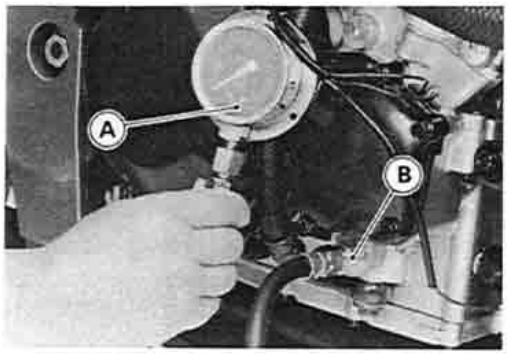

- Remove the right lower fairing (see Frame chapter).
- Remove the oil passage plug, and attach the gauge and adapter to the plug hole.

Special Tools – Oil Pressure Gauge, 10 kg/cm²: 57001-164 [A]
Oil Pressure Gauge Adapter, M18 x 1.5: 57001-1278 [B]

- Run the engine at the specified speed, and read the oil pressure gauge.

★If the oil pressure is significantly below the specification, inspect the oil pump and relief valve.

★If the oil pump and relief valve are not at fault. inspect the rest of the lubrication system.

Oil Pressure
Standard: 120 ~ 180 kPa (1.2 ~ 1.8 kg/cm², 17 ~ 26 psi) @4,000 r/min (rpm), oil temp. 90°C (194 °F)

- Stop the engine.
- Remove the oil pressure gauge and adapter.

⚠WARNING

Take care against burns form hot engine oil that will drain through the oil passage when the gauge adapter is removed.

- Apply silicone sealant to the oil passage plug, and tighten it.

Sealant – Kawasaki Bond (Silicone Sealant): 56019-120

Torque – Oil Passage Plug (Right): 15 N-m (1.5 kg-m, 11.0 ft-lb)

Oil Pressure Switch

Oil Pressure Switch Removal

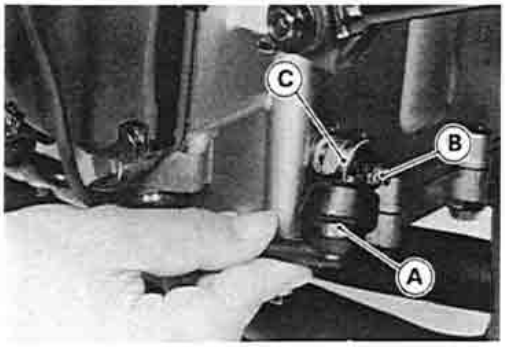

- Remove:
  - Right Lower Fairing (see Frame chapter)
  - Engine Oil (drain, see Engine Oil Change)
  - Switch Cover [A]
  - Switch Terminal [B]
  - Oil Pressure Switch [C]

Oil Pressure Switch Installation

- Apply silicone sealant to the threads of the oil pressure switch and tighten it.

Sealant – Kawasaki Bond (Silicone Sealant): 56019-120

Torque – Oil Pressure Switch: 15 N-m (1.5 kg-m, 11.0 ft-lb)

Engine Removal / Installation

Table of Contents

Exploded View

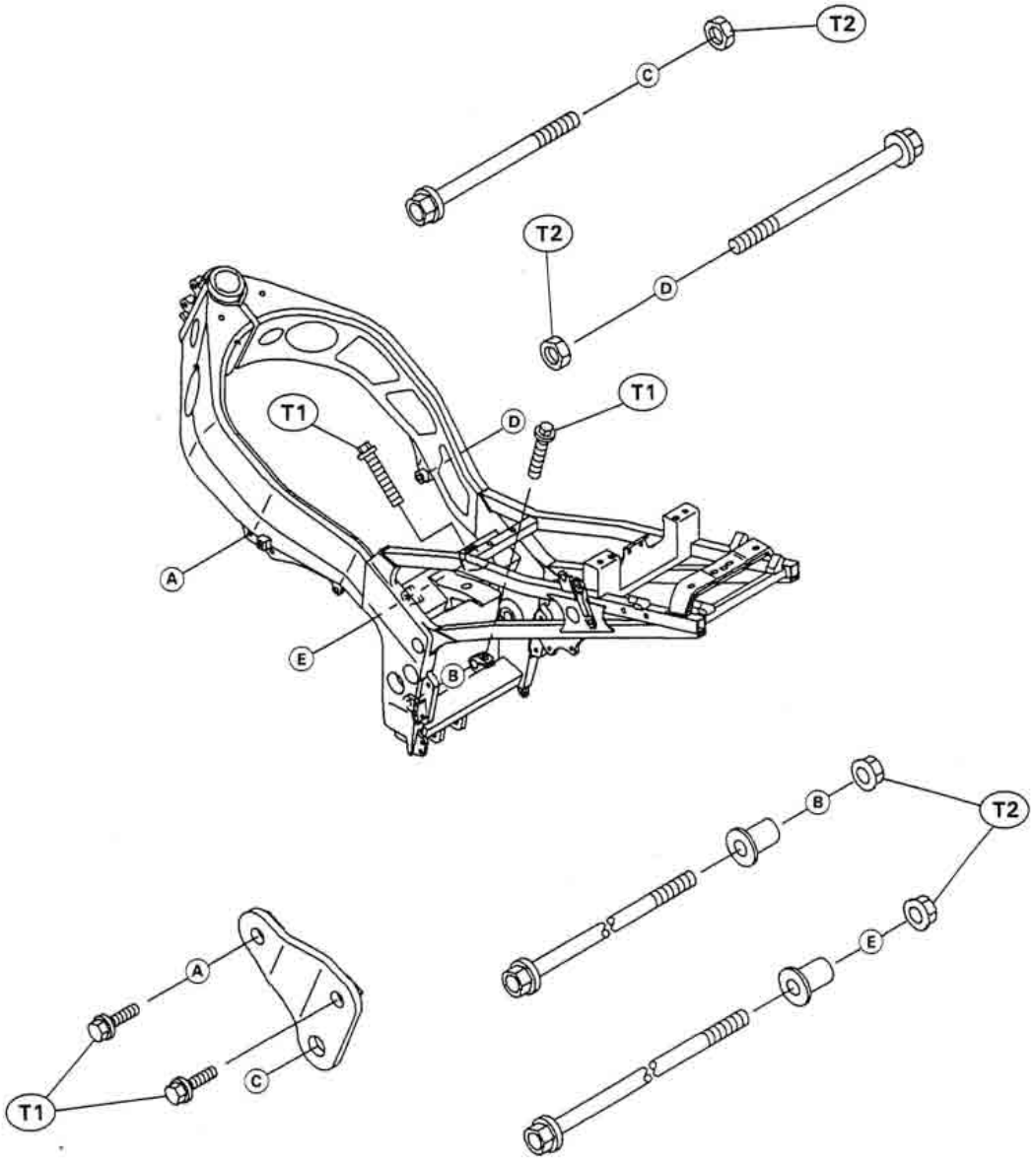

T1: 23 N-m (2.3 kg-m, 16.5 ft-lb)
T2: 44 N-m (4.5 kg-m, 33 ft-lb)

Specifications

Special Tool – Jack: 57001-1238

Engine Removal/Installation

Engine Removal

- Remove:
  - Lower Fairings (see Frame chapter)
  - Engine Oil (drain, see Engine Lubrication System chapter)
  - Coolant (drain, see Cooling System chapter)
  - Fuel Tank (see Fuel System chapter)
  - Air Cleaner Housing (see Fuel System chapter)
  - Ignition Coils (see Electrical System chapter)
  - Carburetors (see Fuel System chapter)
  - Clutch Cable (see Clutch chapter)
  - Baffle Plate on the Cylinder Head Cover
  - Oil Cooler (see Engine Lubrication System chapter)
  - Radiator and Reserve Tank (see Cooling System chapter)
  - Muffler (see Engine Top End chapter)
  - Shift Pedal
  - Engine Sprocket (see Final Drive chapter)
- Disconnect wiring from the engine and free them from the clamps.
  - Pickup Coil Lead and Oil Pressure Switch Lead Connector [A]
  - Battery Ground Lead [B]
  - Starter Motor Lead [C]
  - Alternator Lead Connector [D]

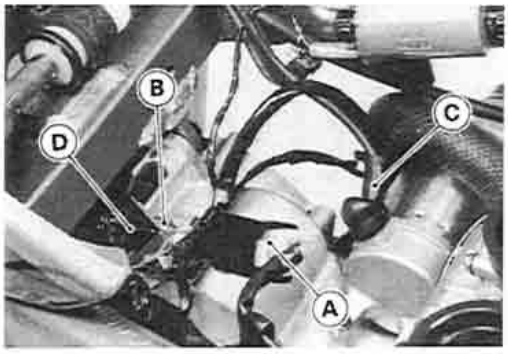

  - Neutral Switch Lead Connector [A]
  - Side Stand Switch Lead Connector [B]

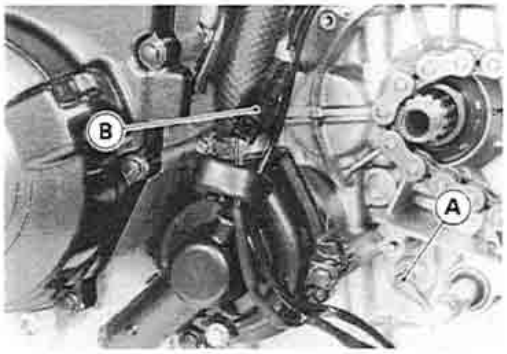

- Support the rear part of the frame on the jack [A].

  Special Tool – Jack: 57001-1238

- Squeeze the brake lever slowly and hold it with a band.
- Support the engine with a stand [B].
- Remove:
  - Engine Mounting Bolts [C] and Nuts
  - Engine Bracket [D]
- Loosen the clamp bolts [E] to free the collars [F].
- Remove the drive chain [G] from the output shaft.
- Using the stand, take out the engine to the left.

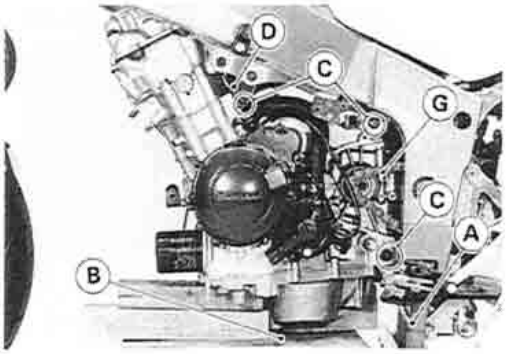

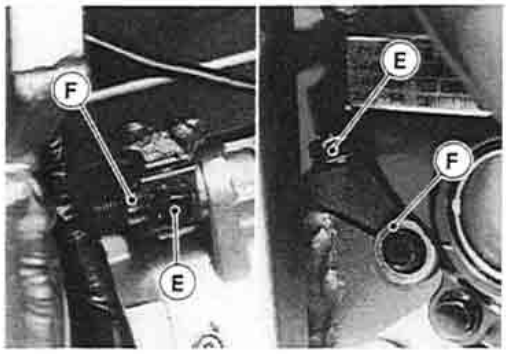

Engine Installation

- Hang the drive chain over the output shaft just before moving the engine into its final position in the frame.
- Install the engine bracket.

Torque – Engine Bracket Bolt: 23 N-m (2.3 kg-m, 16.5 ft-lb)

- Insert the collars in the clamps of the frame.
- Tighten the engine mounting bolts and nuts.

Torque – Engine Mounting Bolts and Nuts: 44 N-m (4.5 kg-m, 33 ft-lb)

- Tighten the clamp bolts.

Torque – Engine Mounting Clamp Bolts: 23 N-m (2.3 kg-m, 16.5 ft-lb)

- Install the removed parts (see appropriate chapters).
- Adjust:
  Throttle Cables (see Fuel System chapter)
  Choke Cable (see Fuel System chapter)
  Drive Chain (see Final Drive chapter)

Crankshaft / Transmission

Table of Contents

Exploded View

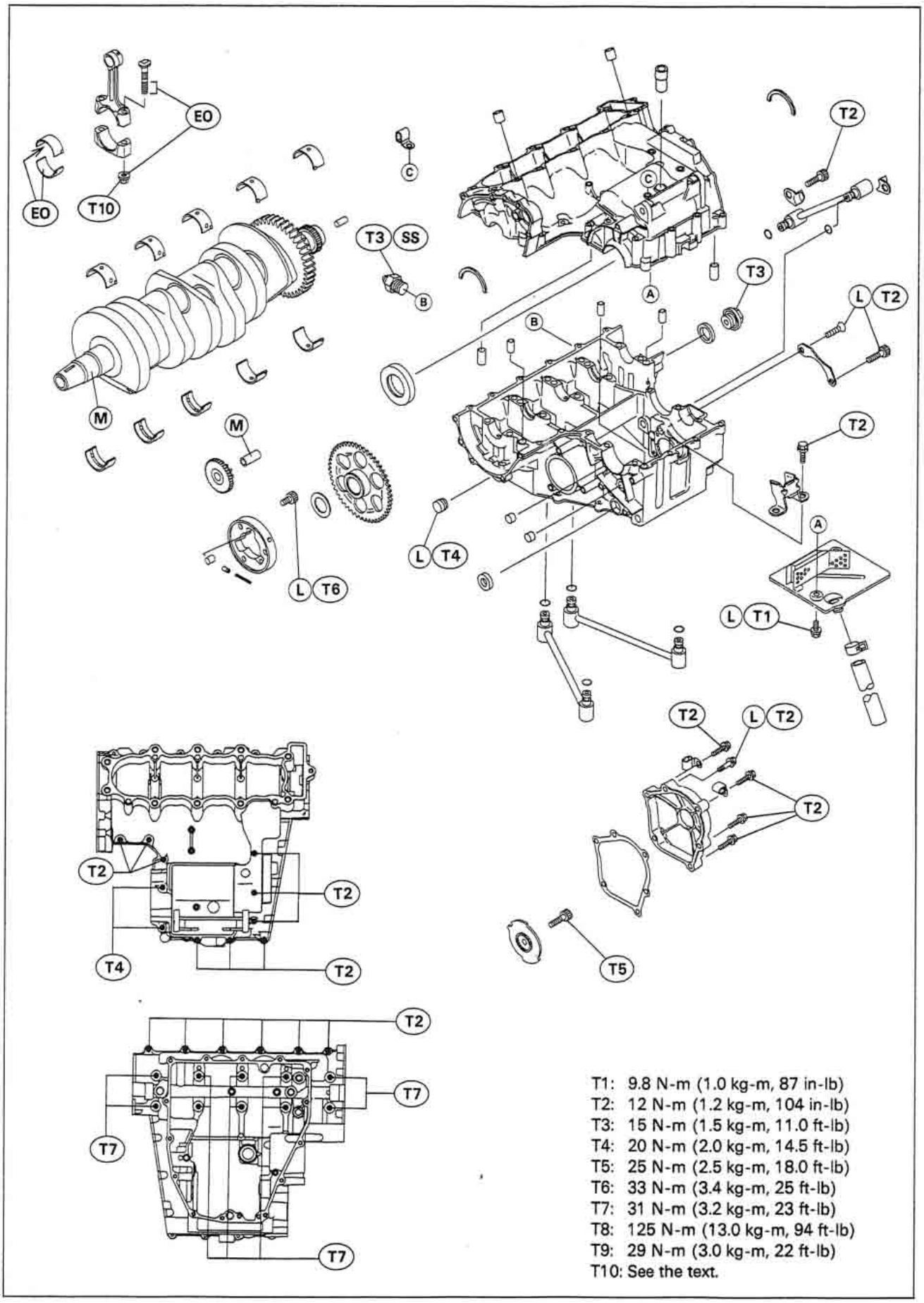

T1: 9.8 N-m (1.0 kg-m, 87 in-lb)
T2: 12 N-m (1.2 kg-m, 104 in-lb)
T3: 15 N-m (1.5 kg-m, 11.0 ft-lb)
T4: 20 N-m (2.0 kg-m, 14.5 ft-lb)
T5: 25 N-m (2.5 kg-m, 18.0 ft-lb)
T6: 33 N-m (3.4 kg-m, 25 ft-lb)
T7: 31 N-m (3.2 kg-m, 23 ft-lb)
T8: 125 N-m (13.0 kg-m, 94 ft-lb)
T9: 29 N-m (3.0 kg-m, 22 ft-lb)
T10: See the text.

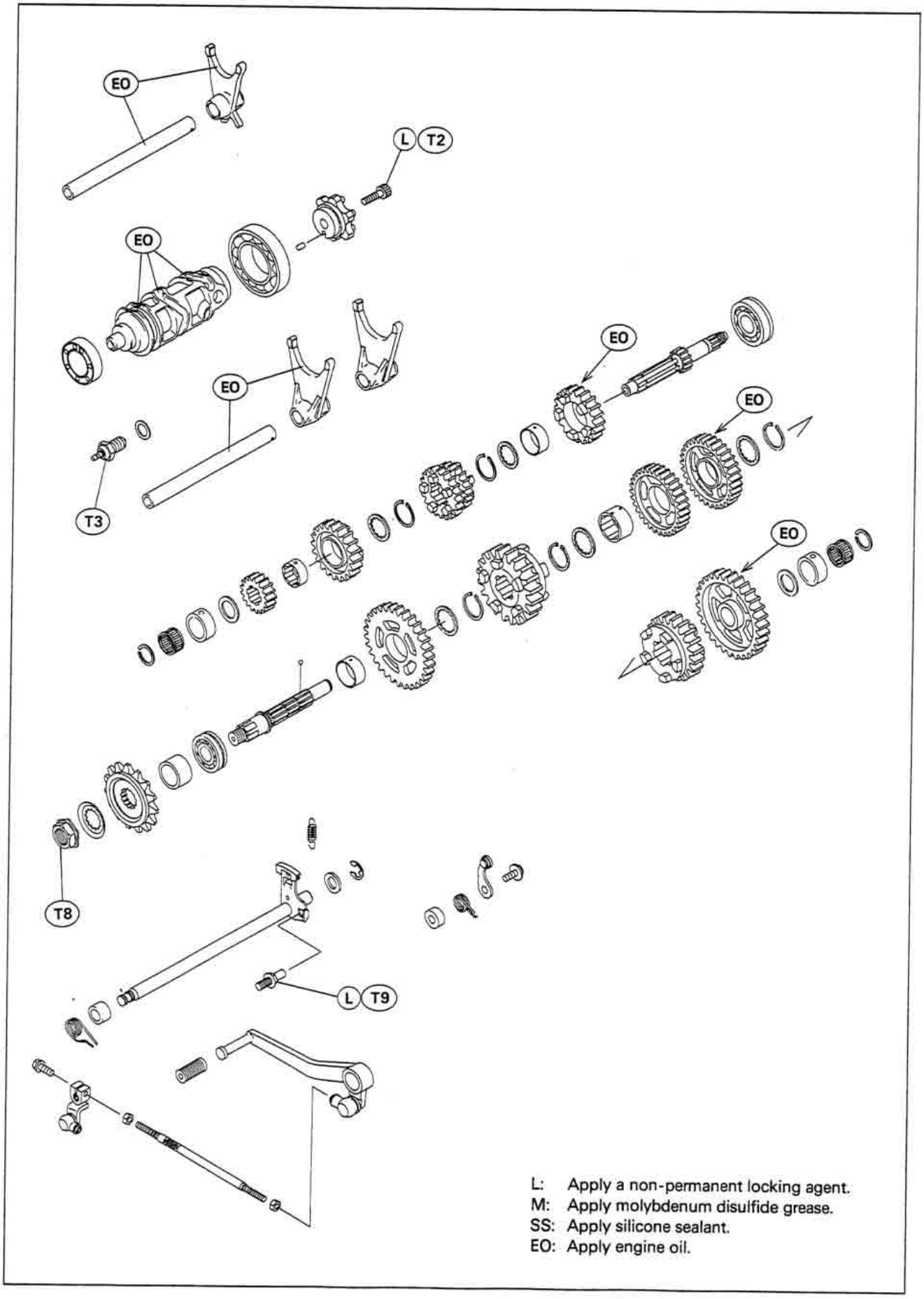
EO
L
T2
EO
EO
EO
EO
EO
T3
T8
L
T9
L: Apply a non-permanent locking agent.
M: Apply molybdenum disulfide grease.
SS: Apply silicone sealant.
EO: Apply engine oil.

Specifications

Item		Standard	Service Limit
Crankshaft, Connecting Rods:			
Connecting rod big end side clearance		0.13 ~ 0.33 mm	0.5 mm
Connecting rod big end bearing insert/crankpin clearance		0.031 ~ 0.059 mm	0.10 mm
Crankpin diameter:		29.984 ~ 30.000 mm	29.97 mm
Marking	None	29.984 ~ 29.994 mm	- - -
	○	29.995 ~ 30.000 mm	- - -
Connecting rod big end bore diameter:		33.000 ~ 33.016 mm	---
Marking	None	33.000 ~ 33.008 mm	- - -
	○	33.009 ~ 33.016 mm	- - -
Connecting rod big end bearing insert thickness:			
	Pink	1.475 ~ 1.480 mm	---
	Brown	1.480 ~ 1.485 mm	---
	Black	1.485 ~ 1.490 mm	---

Connecting rod big end bearing insert selection:

Con-rod Big End Bore Diameter Marking	Crankpin Diameter Marking	Bearing Insert	
		Size Color	Part Number
None	○	Pink	92028-1709
None	None	Brown	92028-1494
○	○		
○	None	Black	92028-1493

Connecting Rod Bolt Stretch (Usable Range)			
New connecting rod		0.20 ~ 0.32 mm	- - -
Used connecting rod		0.24 ~ 0.36 mm	- - -
Crankshaft side clearance		0.05 ~ 0.20 mm	0.40 mm
Crankshaft runout		TIR 0.02 mm or less	TIR 0.05 mm
Crankshaft main bearing insert/ journal clearance		0.014 ~ 0.038 mm	0.07 mm
Crankshaft main journal diameter:		29.984 ~ 30.000 mm	29.96 mm
Marking	None	29.984 ~ 29.994 mm	- - -
	1	29.995 ~ 30.000 mm	- - -
Crankcase main bearing bore diameter:		33.000 ~ 33.016 mm	- - -
Marking	○	33.000 ~ 33.008 mm	- - -
	None	33.009 ~ 33.016 mm	- - -
Crankshaft main bearing insert thickness:			
	Brown	1.491 ~ 1.495 mm	- - -
	Black	1.495 ~ 1.499 mm	- - -
	Blue	1.499 ~ 1.503 mm	- - -

Crankshaft main bearing insert selection:

Crankcase Main Bearing Bore Diameter Marking	Crankshaft Main Journal Diameter Marking	Bearing Insert*		
		Size Color	Part Number	Journal Nos.
○	1	Brown	92028-1418	3, 5
			92028-1421	1, 2, 4
None	1	Black	92028-1417	3, 5
○	None		92028-1420	1, 2, 4
None	None	Blue	92028-1416	3, 5
			92028-1419	1, 2, 4

*The bearing inserts for Nos. 1, 2 and 4 journals have an oil groove, respectively.

Item	Standard	Service Limit
Transmission:		
Shift fork ear thickness	5.9 ~ 6.0 mm	5.8 mm
Gear shift fork groove width	6.05 ~ 6.15 mm	6.25 mm
Shift fork guide pin diameter	5.9 ~ 6.0 mm	5.8 mm
Shift drum groove width	6.05 ~ 6.20 mm	6.3 mm

Special Tool – Outside Circlip Pliers: 57001-144

Sealant – Kawasaki Bond (Silicone Sealant): 56019-120

Crankcase Splitting

Crankcase Splitting

- Remove the engine (see Engine Removal/Installation chapter).
- Set the engine on a clean surface and hold the engine steady while parts are being removed.
- Remove:
  - Pickup Coil (see Electrical System chapter)
  - Oil Hose (Cylinder Head ~ Lower Crankcase)
  - Clutch (see Clutch chapter)
  - External Shift Mechanism (see External Shift Mechanism Removal)
  - Starter Motor (see Electrical System chapter)
  - Oil Pump (see Engine Lubrication System chapter)
  - Alternator Rotor (see Electrical System chapter)
  - Oil Filter (see Engine Lubrication System chapter)

★If the crankshaft is to be removed, remove the pistons (see Engine Top End chapter).

- Remove the upper crankcase bolts.

○First loosen the 6 mm bolts.
  - 6 mm Bolts [A]
  - 7 mm Bolts [B]

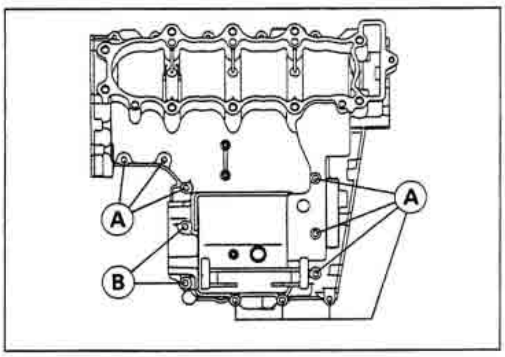

- Remove the oil pan, O-rings(2), oil screen and oil pipes (see Engine Lubrication System chapter).
- Remove the lower crankcase bolts and brackets.

○First loosen the 6 mm bolts.
  - 6 mm Bolts [A]
  - 8 mm Bolts [B]

- Tap lightly around the crankcase mating surface with a plastic mallet, and split the crankcase. Take care not to damage the crankcase.

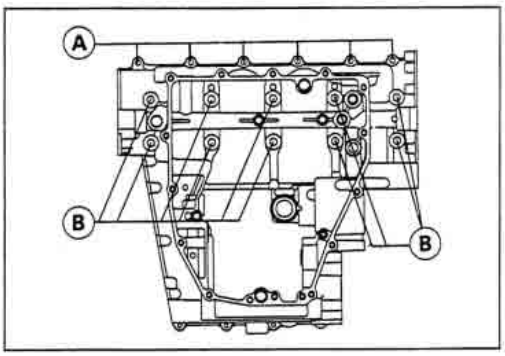

Crankcase Assembly

CAUTION
The upper and lower crankcase halves are machined at the factory in the assembled state, so the crankcase halves must be replaced as a set.

- With a high-flash point solvent, clean off the mating surfaces of the crankcases halves and wipe dry.
- Using compressed air, blow out the oil passages in the crankcase halves.

- Apply silicone sealant to the breather plate mating surface [A] 1 to 1.5 mm thick, wait until sealant dries, and then install the breather plate [B].

  Sealant – Kawasaki Bond (Silicone Sealant): 56019-120

- Apply a non-permanent locking agent to the threads and tighten the bolts [C].

  Torque – Breather Plate Bolts: 9.8 N-m (1.0 kg-m, 87 in-lb)

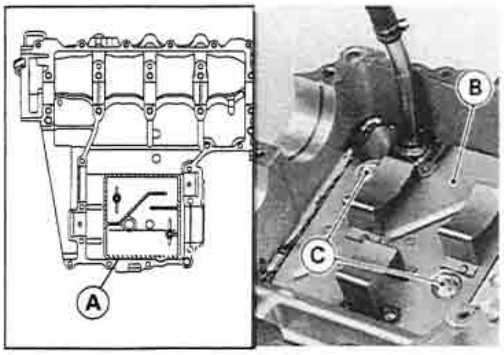

● Install:
Crankshaft and Connecting Rods
Camshaft Chain [A]
Transmission Shaft and Gears
Dowel Pins [B]
Shift Drum
Shift Forks and Shift Rods

● Before fitting the lower case on the upper case, check the following.
○ Be sure to hang the camshaft chain on the crankshaft.
○ Check to see that the shift drum and transmission gears are in the neutral position.

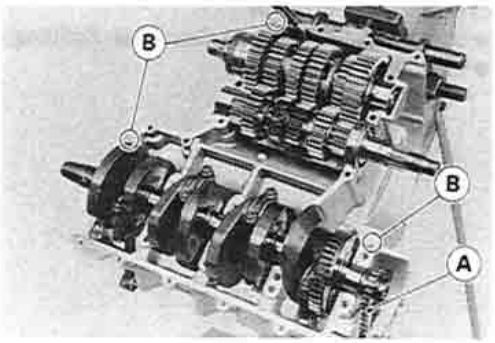

● Apply silicone sealant [A] to the mating surface of the lower crankcase half.

Sealant – Kawasaki Bond (Silicone Sealant): 56019-120

CAUTION
Do not apply silicone sealant around the crankshaft main bearing inserts.

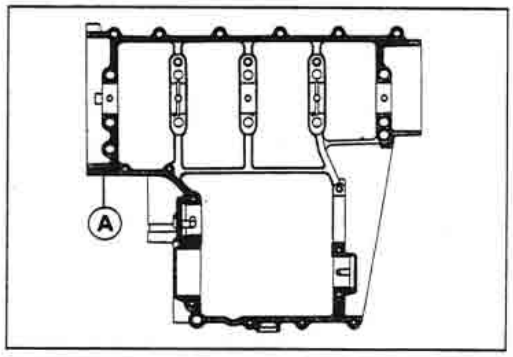

● Tighten the lower crankcase bolts.
○ Following the sequence numbers on the lower crankcase half, tighten the 8 mm bolts [1 ~ 10].

Torque – Crankcase 8 mm Bolts: 31 N-m (3.2 kg-m, 23 ft-lb)

○ Install the brackets [A] and tighten the 6 mm bolts [B].

Torque – Crankcase 6 mm Bolts: 12 N-m (1.2 kg-m, 104 in-lb)

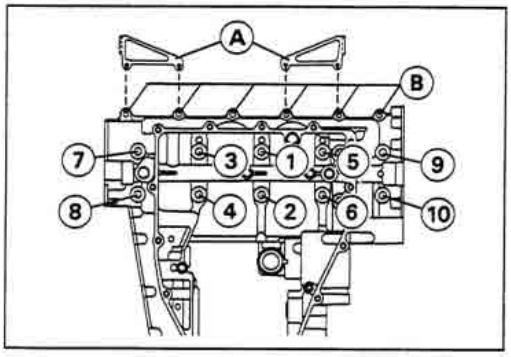

● Tighten the upper crankcase bolts.

Torque – Crankcase 7 mm Bolts [A]: 20 N-m (2.0 kg-m, 14.5 ft-lb)
Crankcase 6 mm Bolts [B]: 12 N-m (1.2 kg-m, 104 in-lb)

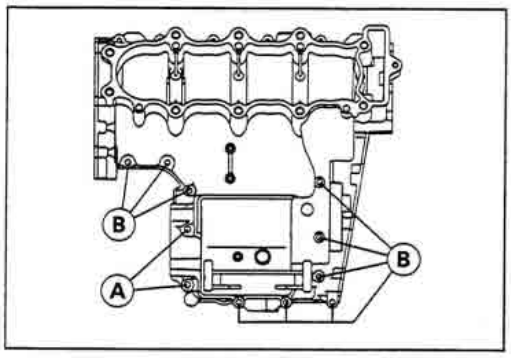

● After tightening all crankcase bolts, check the following items.
○ Drive shaft and output shafts turn freely.
○ While spinning the output shaft, gears shift smoothly from the 1st to 6th gear, and 6th to 1st.
○ When the output shaft stays still, the gear can not be shifted to 2nd gear or other higher gear positions.

Crankshaft and Connecting Rods

Crankshaft Removal

- Split the crankcase (see Crankcase Splitting).
- Remove the crankshaft.

Crankshaft Installation

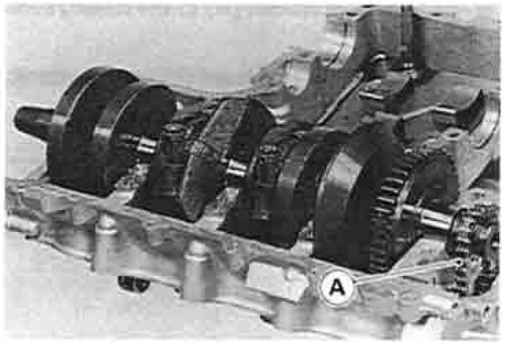

CAUTION

If the crankshaft, bearing inserts, or crankcase halves are replaced with new ones, select the bearing inserts and check clearance with a plastigage (press gauge) before assembling engine to be sure the correct bearing inserts are installed.

- Apply engine oil to the crankshaft main bearing inserts.
- Install the crankshaft with the camshaft chain [A] hanging on it.

Connecting Rod Removal

- Split the crankcase (see Crankcase Splitting).
- Remove the connecting rod nuts.
- Remove the crankshaft.

NOTE

○ *Mark and record the locations of the connecting rods and their big end caps so that they can be reassembled in their original positions.*

- Remove the connecting rods from the crankshaft.

Connecting Rod Installation

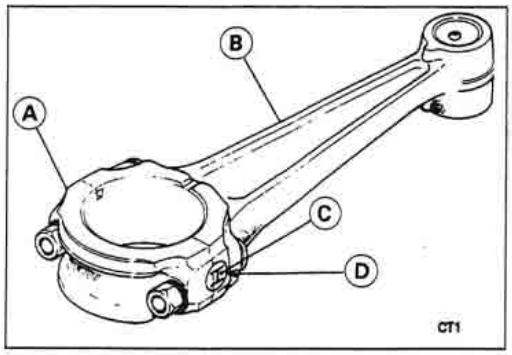

CAUTION

To minimize vibration, a pair of connecting rods (left two rods or right two) should have the same weight mark.

Big End Cap [A]
Connecting Rod [B]
Weight Mark, Alphabet [C]
Diameter Mark [D]

- If the connecting rods, big end bearing inserts, or crankshaft are replaced with new ones, select the bearing insert and check clearance with a plastigage (press gauge) before assembling engine to be sure the correct bearing inserts are installed.

CAUTION

The connecting rod bolts are designed to stretch when tightened. Never reuse them.

- Replace the connecting rod big end bolts with new ones.
- Be sure to clean the bolts and nuts thoroughly with high-flash point solvent, because the new bolts and nuts are treated with an anti-rust solution.

⚠WARNING

Clean the bolts and nuts in a well-ventilated area, and take care that there is no spark or flame anywhere near the working area. This includes any appliance with a pilot light. Because of the danger of highly flammable liquids, do not use gasoline or low-flash point solvents to clean them.

CAUTION

Immediately dry the bolts and nuts with compressed air after cleaning.
Clean and dry the bolts and nuts completely.

- Apply engine oil to the inner surface of upper and lower bearing inserts [A].
- Apply a small amount of engine oil to the threads [B] and seating surface [C] of the connecting rod nuts.

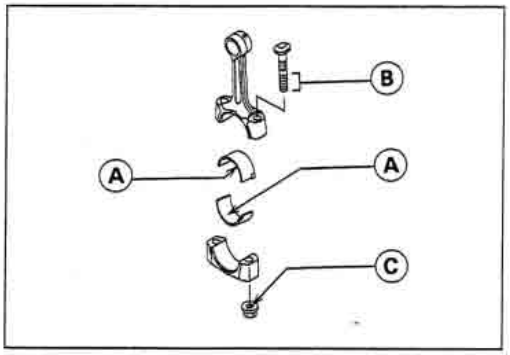

- First, tighten the nuts to the specified torque. See the table below.
- Next, tighten the nuts **120°** more.
- ○ Mark [A] the connecting rod big end caps and nuts so that nuts can be turned 120° [B] properly.
- ○ Tighten the hexagon nut by 2 corners.

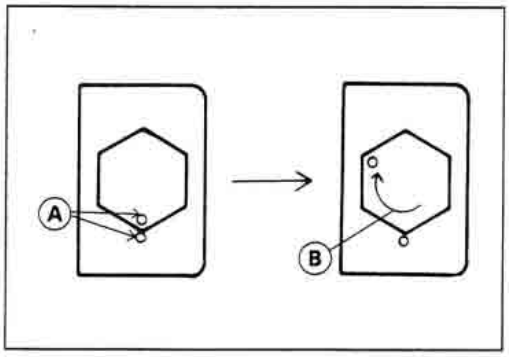

Connecting Rod Assy	Bolt, Nut	Torque + Angle N-m (kg-m, ft-lb)
Used	New	24 (2.4, 17.4) + 120°
New	New	
	Attached to new con-rod	22 (2.2, 16.0) + 120°

CAUTION

Since the friction force of the seating surface and thread portion of new nuts is different from that of used ones, the nut tightening torque should be changed as specified in the above table.
Be careful not to overtighten the nuts.

Connecting Rod Big End Bearing Insert/Crankpin Wear

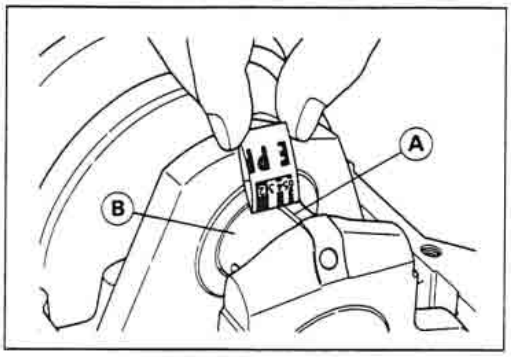

- Using a plastigage (press gauge) [A], measure the bearing insert/crankpin [B] clearance.

NOTE

- ○ *Tighten the connecting rod big end nuts to the specified torque (see Connecting Rod Installation).*
- ○ *Do not move the connecting rod and crankshaft during clearance measurement.*

Connecting Rod Big End Bearing Insert/Crankpin Clearance

Standard:	**0.031 ~ 0.059 mm**
Service Limit:	**0.10 mm**

★If clearance is within the standard, no bearing replacement is required.

★If clearance is between 0.059 mm and the service limit (0.10 mm), replace the bearing inserts with inserts painted black [C]. Check insert/crankpin clearance with the plastigage. The clearance may exceed the standard slightly, but it must not be less than the minimum in order to avoid bearing seizure.

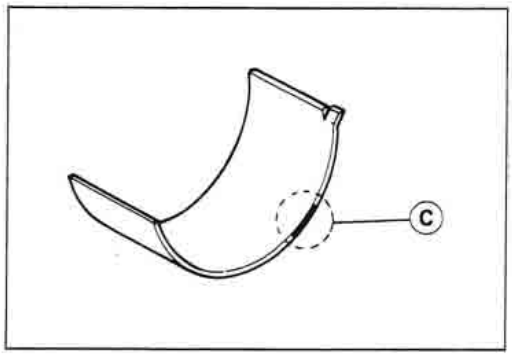

★If the clearance exceeds the service limit, measure the diameter of the crankpins.

Crankpin Diameter

Standard:	**29.984 ~ 30.000 mm**
Service Limit:	**29.97 mm**

★If any crankpin has worn past the service limit, replace the crankshaft with a new one.

★If the measured crankpin diameters are not less than the service limit, but do not coincide with the original diameter markings on the crankshaft, make new marks on it.

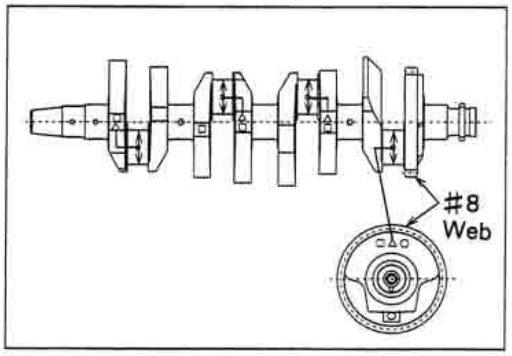

Crankpin Diameter Marks

None	**29.984 ~ 29.994 mm**
○	**29.995 ~ 30.000 mm**

△: Crankpin Diameter Marks, "○" mark or no mark.

- Measure the connecting rod big end bore diameter, and mark each connecting rod big end in accordance with the bore diameter.

Bore Diameter Mark (Around Weight Mark) [A]: "○" or no mark.

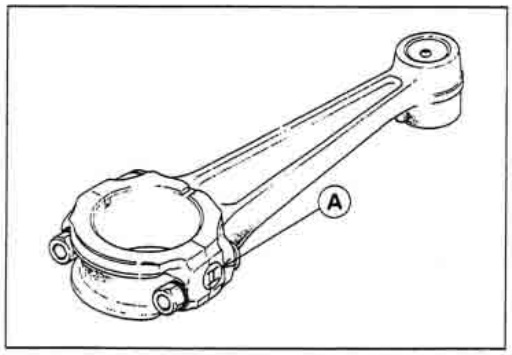

NOTE

- ○ *Tighten the connecting rod big end nuts to the specified torque (see Connecting Rod Installation).*
- ○ *The mark already on the big end should almost coincide with the measurement.*

Connecting Rod Big End Bore Diameter Marks

None	**33.000 ~ 33.008 mm**
○	**33.009 ~ 33.016 mm**

- Select the proper bearing insert in accordance with the combination of the connecting rod and crankshaft coding.
- Install the new inserts in the connecting rod and check insert/crankpin clearance with the plastigage.

Con-rod Big End Bore Diameter Marking	Crankpin Diameter Marking	Bearing Insert	
		Size Color	Part Number
None	○	Pink	92028-1709
None	None	Brown	92028-1494
○	○		
○	None	Black	92028-1493

Crankshaft Main Bearing Insert/Journal Wear

●Using a plastigage (press gauge) [A], measure the bearing insert/journal [B] clearance.

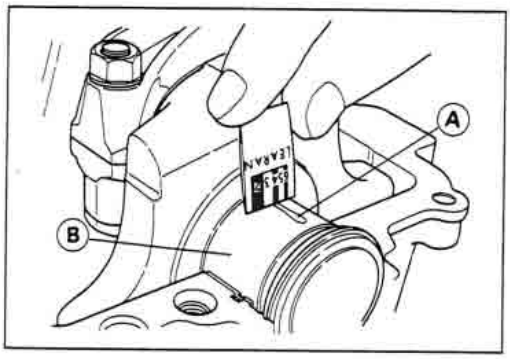

NOTE

○*Tighten the crankcase bolts to the specified torque (see Crankcase Assembly).*
○*Do not turn the crankshaft during clearance measurement.*
○*Journal clearance less than 0.025 mm can not be measured by plastigage, however, using genuine parts maintains the minimum standard clearance.*

Crankshaft Main Bearing Insert/Journal Clearance
Standard: 0.014 ~ 0.038 mm
Service Limit: 0.07 mm

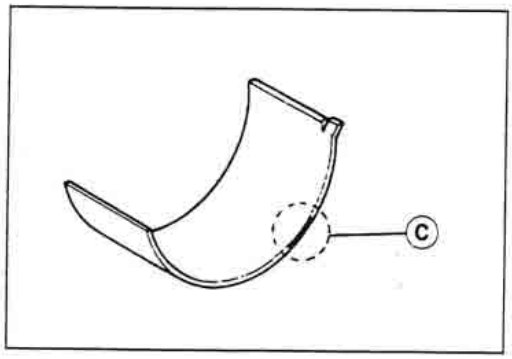

★If clearance is within the standard, no bearing replacement is required.
★If clearance is between 0.038 mm and the service limit (0.07 mm), replace the bearing inserts with inserts painted blue [C]. Check insert/journal clearance with the plastigage. The clearance may exceed the standard slightly, but it must not be less than the minimum in order to avoid bearing seizure.
★If clearance exceeds the service limit, measure the diameter of the crankshaft main journal.

Crankshaft Main Journal Diameter
Standard: 29.984 ~ 30.000 mm
Service Limit: 29.96 mm

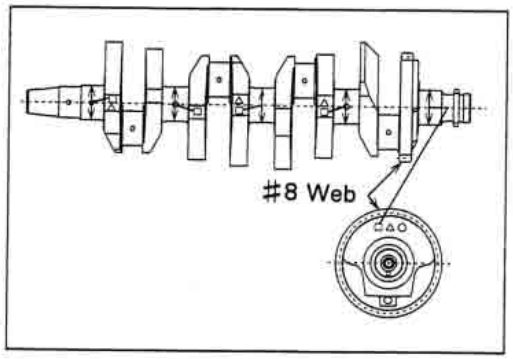

★If any journal has worn past the service limit, replace the crankshaft with a new one.
★If the measured journal diameters are not less than the service limit, but do not coincide with the original diameter markings on the crankshaft, make new marks on it.

Crankshaft Main Journal Diameter Marks
None 29.984 ~ 29.994 mm
1 29.995 ~ 30.000 mm

□: Crankshaft Main Journal Diameter Marks, "1" mark or no mark.

- Measure the main bearing bore diameter, and mark the upper crankcase half in accordance with the bore diameter.
  - ○: Crankcase Main Bearing Bore Diameter Marks, "○" mark or no mark.

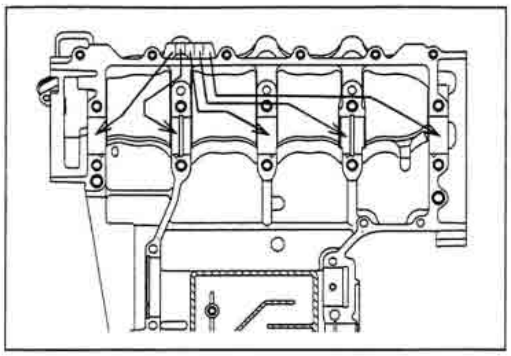

NOTE

- *Tighten the crankcase bolts to the specified torque (see Crankcase Assembly).*
- *The mark already on the upper crankcase half should almost coincide with the measurement.*

Crankcase Main Bearing Bore Diameter Marks

○	**33.000 ~ 33.008 mm**
None	**33.009 ~ 33.016 mm**

- Select the proper bearing insert in accordance with the combination of the crankcase and crankshaft coding.
- Install the new inserts in the crankcase halves and check insert/journal clearance with the plastigage.

Crankcase Main Bearing Bore Diameter Marking	Crankshaft Main Journal Diameter Marking	Bearing Insert*		
		Size Color	Part Number	Journal Nos.
○	1	Brown	92028-1418	3, 5
			92028-1421	1, 2, 4
None	1	Black	92028-1417	3, 5
○	None		92028-1420	1, 2, 4
None	None	Blue	92028-1416	3, 5
			92028-1419	1, 2, 4

*The bearing inserts for Nos. 1, 2 and 4 journals have an oil groove, respectively.

Crankshaft Side Clearance

- Insert a thickness gauge between the crankcase main bearing [A] and the crank web [B] at the No. 2 journal to determine clearance.

★If the clearance exceeds the service limit, replace the crankcase halves as a set.

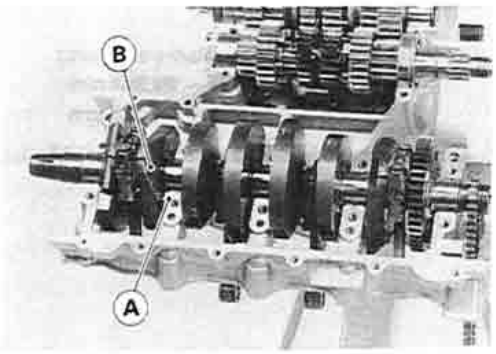

CAUTION
The upper and lower crankcase halves are machined at the factory in the assembled state, so the crankcase halves must be replaced as a set.

Crankshaft Side Clearance

Standard:	**0.05 ~ 0.20 mm**
Service Limit:	**0.40 mm**

Starter Clutch

Starter Clutch Removal

- Remove:
  Alternator Rotor (see Electrical System chapter)
  Starter Clutch Bolts [A] and Starter Clutch [B]

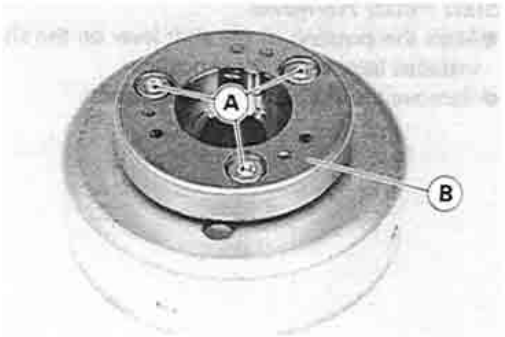

Starter Clutch Installation

- Apply a non-permanent locking agent to the threads of the starter clutch bolts and tighten them.

Torque – Starter Clutch Bolts: 33 N-m (3.4 kg-m, 25 ft-lb)

Starter Clutch Inspection

- Remove:
  Alternator Cover (see Electrical System chapter)
  Starter Idle Gear
- Turn the starter clutch gear [A] by hand. The starter clutch gear should turn clockwise [B] freely, but should not turn counterclockwise [C].

★if the clutch does not operate as it should or if it makes noise, disassemble the starter clutch, examine each part visually, and replace any worn or damaged parts.

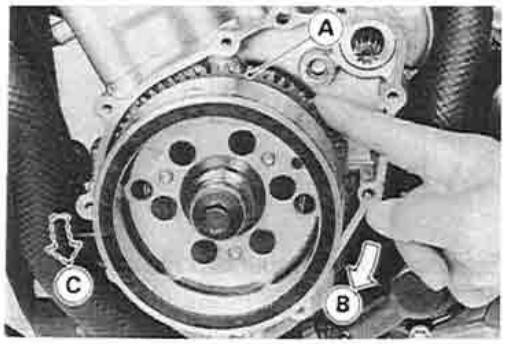

Transmission

Shift Pedal Removal

- Mark the position of the shift lever on the shift shaft so that it can be installed later in the same position.
- Remove the shift lever and shift pedal.

Shift Pedal Installation

- Install the shift pedal [A] so that the distance between the center of the shift pedal and the center line of the shift rod [B] is 10 ~ 15 mm by loosening the front and rear locknuts [C] and turning the rod.

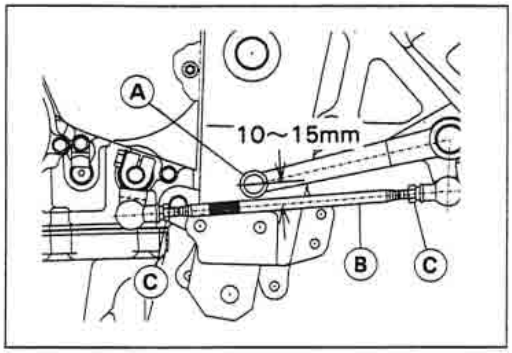

NOTE

○ *The locknut next to the knurled portion of the rod has left-hand threads.*

★ If necessary, adjust the pedal position from the standard position to suit you as follows.

- Loosen the front and rear rod locknuts.
- Turn the rod to adjust the pedal position.
- Tighten the locknuts securely.

External Shift Mechanism Removal

- Remove:
  Engine Oil (drain, see Engine Lubrication System chapter)
  Shift Pedal (see Shift Pedal Removal)
  Clutch (see Clutch chapter)
  Bolts [A], Oil Pipe Holders [B], Oil Pipe [C] and O-ring

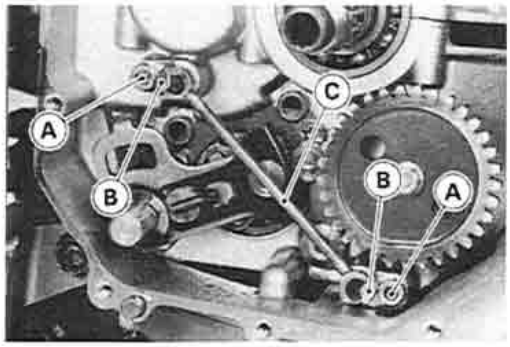

- Remove:
  Shift Shaft [A]
  Bolt [B]
  Gear Positioning Lever [C] and Spring

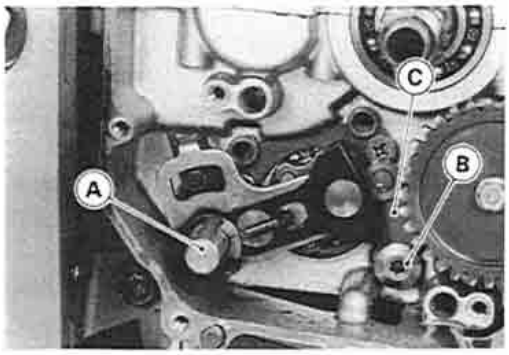

External Shift Mechanism Installation

- Install the gear positioning lever [A] as shown.
  Springs [B] Collar [C]
  Bolt [D]
- Apply a non-permanent locking agent to the bolt and tighten it.

Torque – Gear Positioning Lever Bolt: 9.8 N-m (1.0 kg-m, 87 in-lb)

- Tighten the oil pipe holder bolts.

Torque – Oil Pipe Holder Bolts: 12 N-m (1.2 kg-m, 104 in-lb)

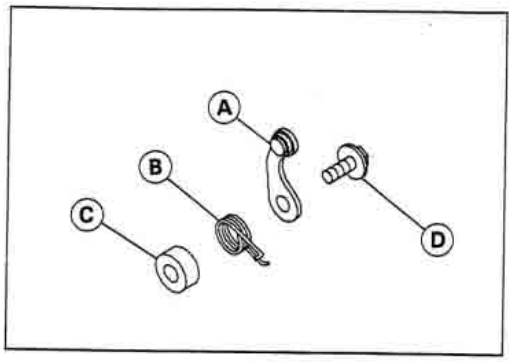

Transmission Shaft Removal

- Split the crankcase (see Crankcase Splitting).
- Remove the drive shaft [A] and output shaft [B].

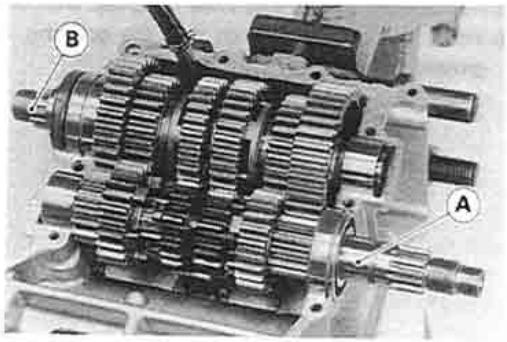

Transmission Shaft Installation

- Apply engine oil to the sliding portion of the gears and bearings.
- Check to see that the set pins [A] and set rings [B] are in place.
- Install the drive shaft and output shaft into the upper crankcase half.

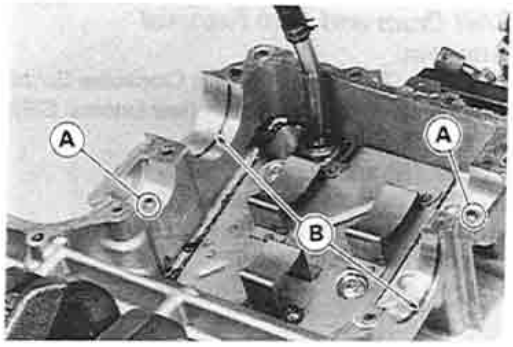

Transmission Disassembly

- Remove the transmission shafts (see Transmission Shaft Removal).
- Remove the circlips, disassemble the transmission shafts.

Special Tool – Outside Circlip Pliers: 57001-144

- The 5th gear [A] on the output shaft has three steel balls assembled into it for the positive neutral finder mechanism. Remove the 5th gear.
  - Set the output shaft in a vertical position holding the 3rd gear [B].
  - Spin the 5th gear quickly [C] and pull it off upward.

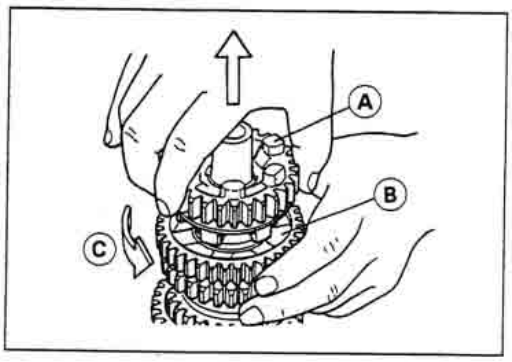

Transmission Assembly

- Install the gear bushings [A] on the shaft with their oil holes [B] aligned with the shaft oil holes.

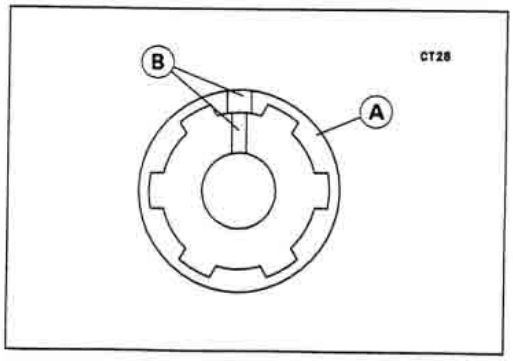

- Fit the steel balls into the 5th gear holes as shown.
  View A – A' (see the output shaft illustration)
  [A] Gear (5th)
  [B] Shaft
  [C] Steel Balls

CAUTION
Do not apply grease to the steel balls to hold them in place. This will cause the positive neutral finder mechanism to malfunction.

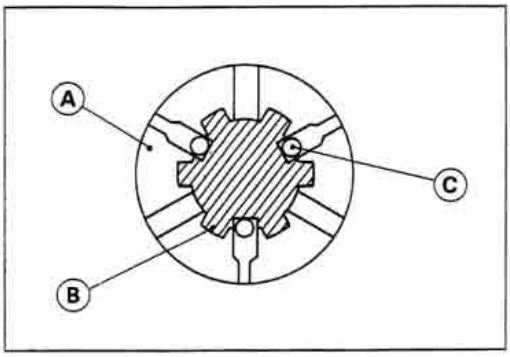

- Replace any circlip that were removed with new ones.
- Install the circlips [A] so that the opening is aligned with a spline groove [B].

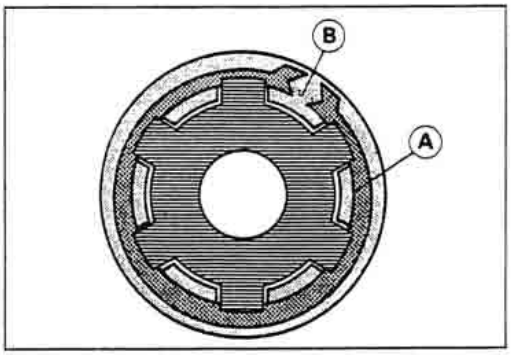

Shift Drum and Fork Removal

- Remove:
  Lower Crankcase Half (see Crankcase Splitting)
  External Shift Mechanism (see External Shift Mechanism Removal)
  Gear Positioning Lever [A]
  Bolt [B] and Screw [C]
  Shift Drum Bearing Holder [D]
- Pull out the shift rods [E], and take off the shift forks.
- Pull out the shift drum [F].

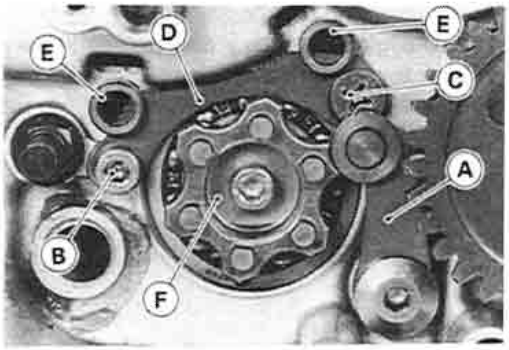

Shift Drum and Fork Installation

- Install the shift rods [A], noting the groove position. The rods are identical.
- Position the one with shortest ears [B] on the drive shaft and place the pin in the center groove in the shift drum [C].
- ○The two forks [D] on the output shaft are identical.
- Install the forks as shown.
- Apply a non-permanent locking agent to the threads of the shift drum bearing holder bolt and screw, and tighten them.

Torque – Shift Drum Bearing Holder Bolt: 12 N-m (1.2 kg-m, 104 in-lb)
Shift Drum Bearing Holder Screw: 12 N-m (1.2 kg-m, 104 in-lb)

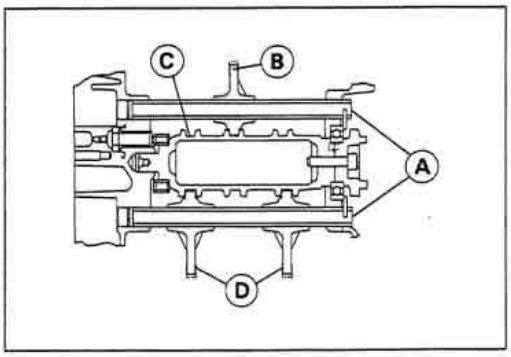

Shfit Drum Disassembly

- Remove the shift drum (see Shift Drum and Fork Removal).
- while holding the shift drum with a vise, remove the shift drum cam holder bolt.
  [A] Shift Drum Cam Holder Bolt
  [B] Dowel Pin

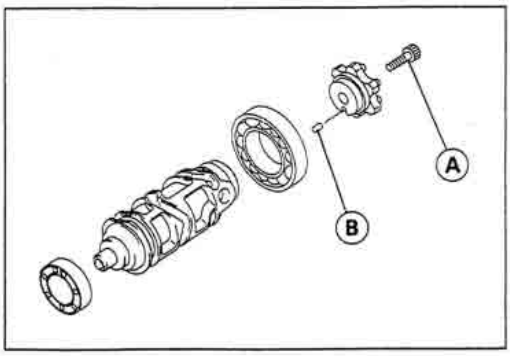

Shfit Drum Assembly

- Be sure to install the dowel pin.
- Apply a non-permanent locking agent to the threads of the shift drum cam holder bolt, and thighten it.

Torque – Shfit Drum Cam Holder Bolt: 12 N-m (1.2 kg-m, 104 in-lb)

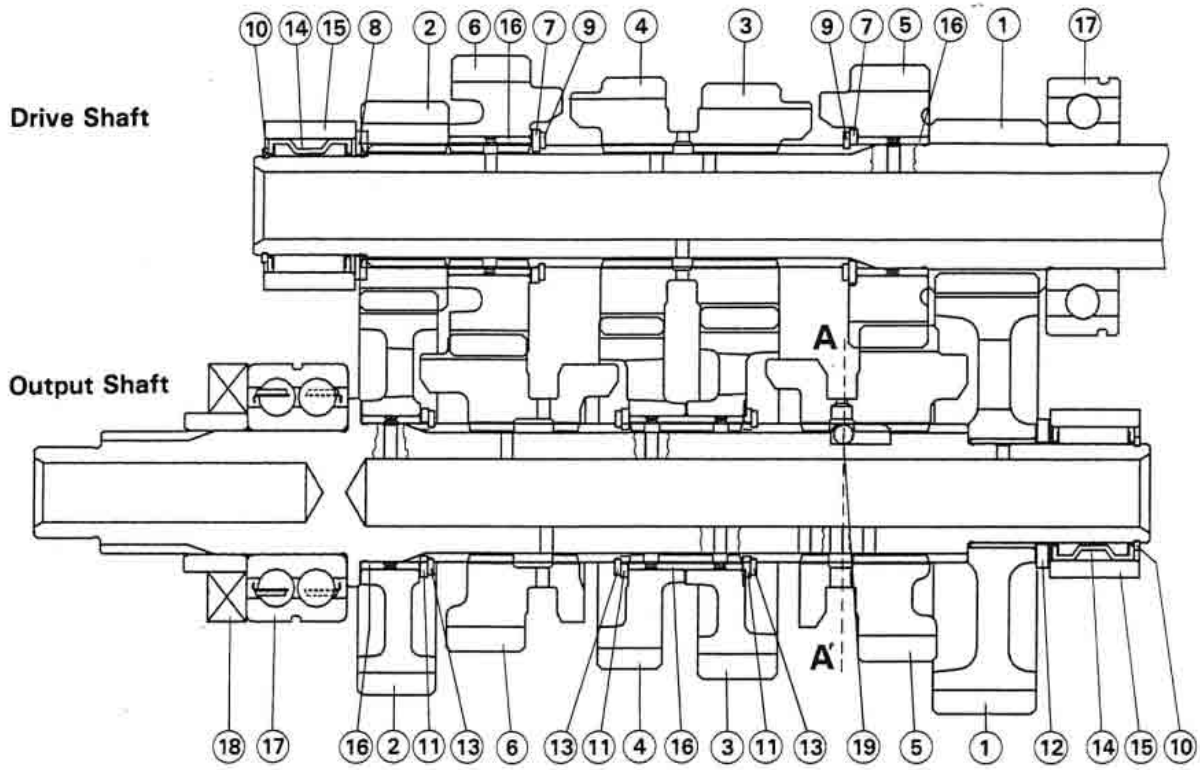

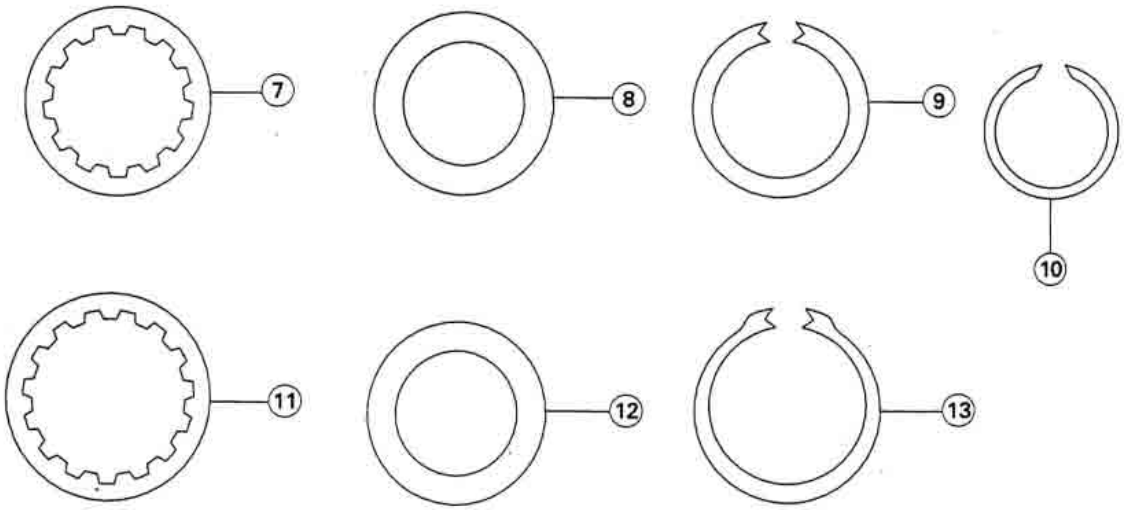

1. 1st Gear
2. 2nd Gear
3. 3rd Gear
4. 4th Gear
5. 5th Gear
6. 6th (Top) Gear
7. Toothed Washer
8. Thrust Washer (Thin)
9. Circlip
10. Circlip
11. Toothed Washer
12. Thrust Washer (Thick)
13. Circlip
14. Needle Bearing
15. Bearing Outer Race
16. Bushing
17. Ball Bearing
18. Oil Seal
19. Steel Ball

Wheels / Tires

Table of Contents

Exploded View

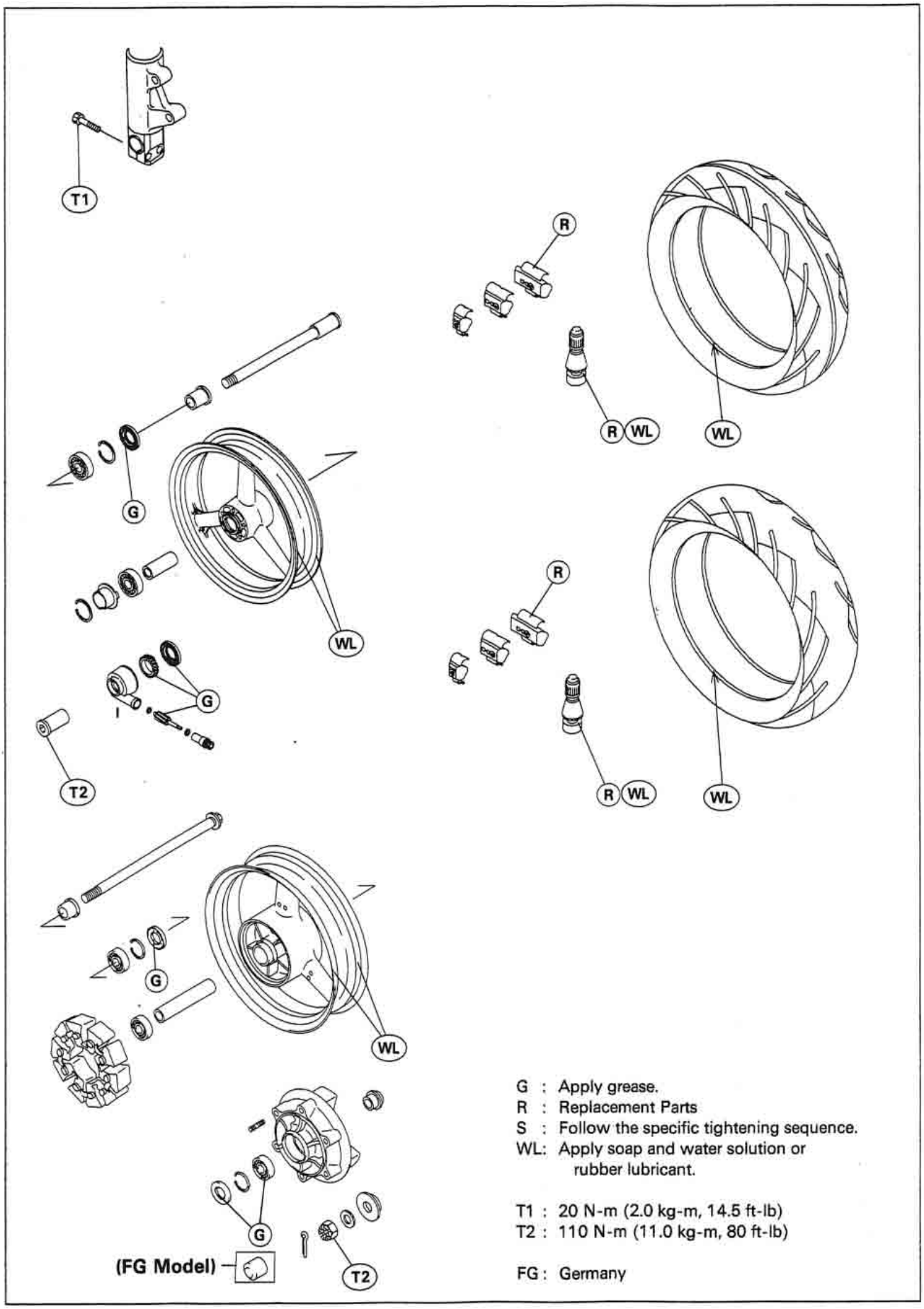

G : Apply grease.
R : Replacement Parts
S : Follow the specific tightening sequence.
WL: Apply soap and water solution or rubber lubricant.

T1 : 20 N-m (2.0 kg-m, 14.5 ft-lb)
T2 : 110 N-m (11.0 kg-m, 80 ft-lb)

FG : Germany

Specifications

Item		Standard	Service Limit
Wheels (Rims):			
Rim runout:	Axial	---	0.5 mm
	Radial	---	0.8 mm
Axle runout/100 mm		0.05 mm or less	0.2 mm
Wheel balance		10 g or less	- - -
Balance weights		10 g, 20 g, 30 g	- - -
Tires:			
Air pressure: (when cold)			
	Front	Up to 184 kg (406 lb) load: 250 kPa (2.5 kg/cm² 36 psi)	- - -
	Rear	Up to 184 kg (406 lb) load: 290 kPa (2.9 kg/cm², 41 psi)	- - -
Tread depth:			
	Front	BRIDGESTONE: 3.4 mm DUNLOP: 4.0 mm PIRELLI: 3.7 mm METZELER: 3.7 mm MICHELIN: 4.2 mm	1 mm
	Rear	BRIDGESTONE: 5.8 mm DUNLOP: 5.6 mm PIRELLI: 5.5 mm METZELER: 5.5 mm MICHELIN: 6.5 mm	Up to 130 km/h (80 mph): 2 mm Over 130 km/h (80 mph): 3 mm
Standard tires:		Make, Type	Size
	Front	BRIDGESTONE, BATTLAX BT-50F, RADIAL E (tubeless) DUNLOP, D204FG (tubeless) PIRELLI, MTR01 (tubelss) METZELER, MEZ1 Front (tubeless) MICHELIN, MACADAM90X (tubeless)	120/60 ZR17
	Rear	BRIDGESTONE, BATTLAX BT-50R, RADIAL E (tubeless) DUNLOP, D204G (tubeless) PIRELLI, MTR02 (tubeless) METZELER, MEZ1 (tubeless) MICHELIN, MACADAM90X (tubeless)	160/60 ZR17

Special Tools – Jack: 57001-1238
Inside Circlip Pliers: 57001-143
Bearing Driver Set: 57001-1129
Bearing Remover Shaft: 57001-1265
Bearing Remover Head, Φ20 x Φ22: 57001-1293

Wheels (Rims)

Front Wheel Removal

- Remove:
  Lower Fairings (see Frame chapter)
  Speedometer Cable Lower End [A]
  Brake Caliper Mounting Bolts [B]

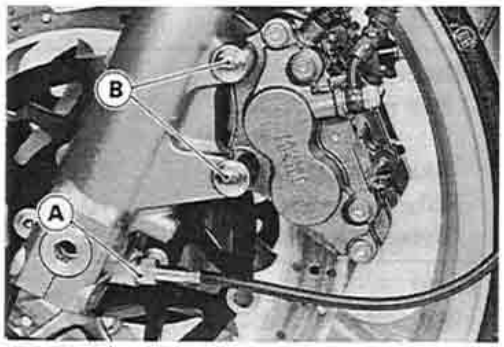

- Loosen:
  Right Side Axle Clamp Bolts [A]
  Axle [B]

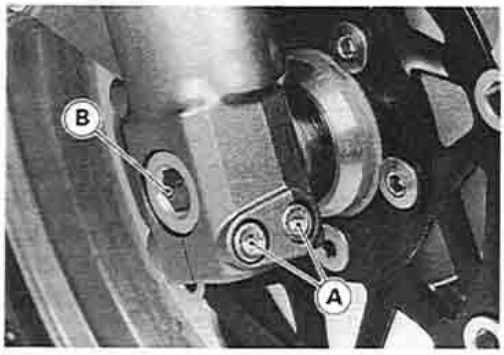

- Raise the front wheel off the ground.

Special Tool – Jack: 57001-1238

- Pull out the axle to the right and drop the front wheel out of the forks.

CAUTION
Do not lay the wheel down on one of the discs. This can damage or warp the disc. Place blocks under the wheel so that the disc does not touch the ground.

Front Wheel Installation

- Install the speedometer gear housing so that its projections [A] fit into the gear drive notches [B] in the wheel hub.

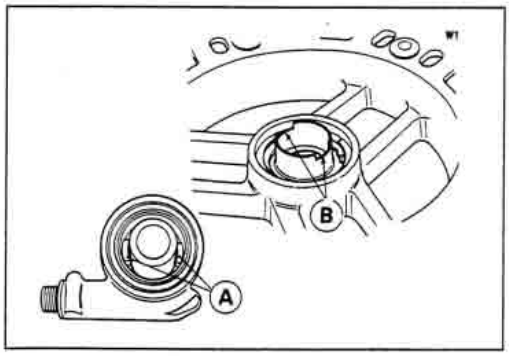

- Fit the collar on the right side of the hub.
- Fit the speedometer gear housing stop[A] in the fork leg stops[B].
- Tighten the axle nut and axle clamp bolt.

Torque – Front Axle Nut: 110 N-m(11.0 kg-m, 80 ft-lb)
Front Axle Clamp Bolts: 20 N-m(2.0 kg-m, 14.5 ft-lb)

- Install the front brake caliper (see Brakes chapter).
- Check the front brake.

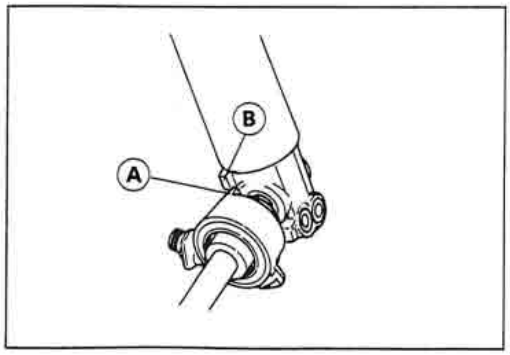

⚠WARNING

Do not attempt to drive the motorcycle until a full brake lever is obtained by pumping the brake lever until the pads are against the disc. The brake will not function on the first application of the lever if this is not done.

Rear Wheel Removal

- Remove:
  Lower Fairings (see Frame chapter)
- Using the jack [A], raise the rear wheel off the ground.

Special Tool – Jack: 57001-1238

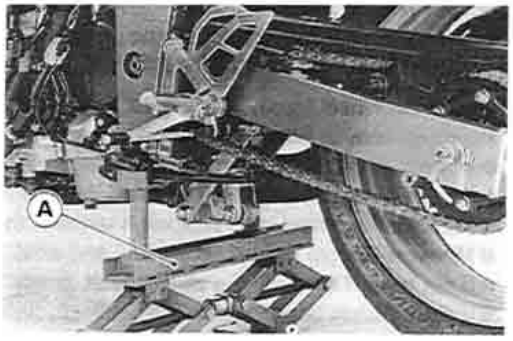

- Remove:
  Cotter Pin [A]
  Axle Nut [B]
  Axle [C]

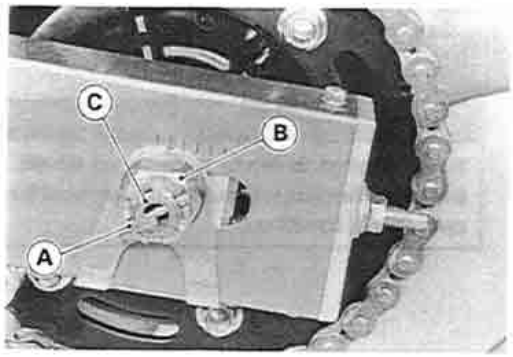

- Remove the drive chain [A] from the rear sprocket toward the left.
- Move the rear wheel back and remove the wheel from the rear caliper.
- Remove the rear wheel.

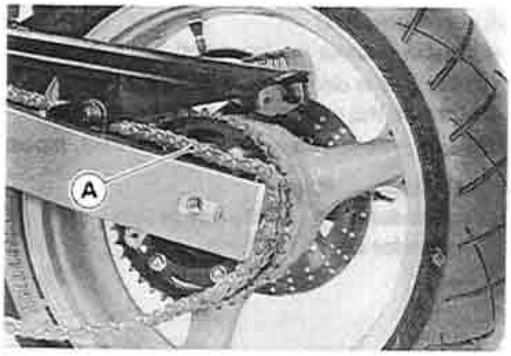

CAUTION

Do not lay the wheel on the ground with the disc facing down. This can damage or warp the disc. Place blocks under the wheel so that the disc does not touch the ground.

Rear Wheel Installation

- Engage the drive chain with the rear sprocket.
- Install the caliper bracket [A] onto the swingarm stop [B].
- ○ Insert the axle from the right side of the wheel, and tighten the axle nut.

Torque – Rear Axle Nut: 110 N-m (11.0 kg-m, 80 ft-lb)

- Adjust the drive chain slack after installation (see Final Drive chapter).
- Check the rear brake.

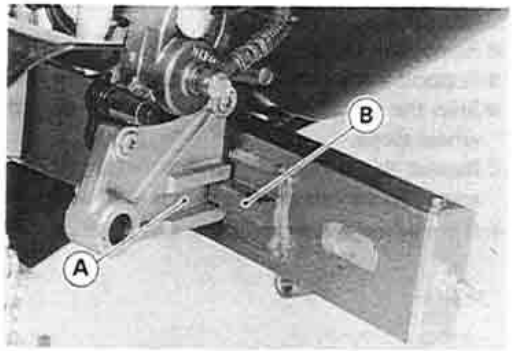

⚠WARNING

Do not attempt to drive the motorcycle until a full brake pedal is obtained by pumping the brake pedal until the pads are against the disc. The brake will not function on the first application of the pedal if this is not done.

Wheel Inspection

- Raise the front/rear wheel off the ground.
  Special Tool – Jack: 57001-1238
- Spin the wheel lightly, and check for roughness or binding.
- ★If roughness or binding is found, replace the hub bearings.
- Inspect the wheel for small cracks, dents, bending, or warp.
- ★If there is any damage to the wheel, replace the wheel.
- Remove the wheel, and support it without the tire by the axle.
- Measure the rim runout, radial [A] and axial [B], with a dial gauge.
- ★If rim runout exceeds the service limit, check the hub bearings.
- ★If the problem is not due to the bearings, replace the wheel.

Rim Runout

Service Limit:	**Axial**	**0.5 mm**
	Radial	**0.8 mm**

⚠WARNING

Never attempt to repair a damaged wheel. If there is any damage besides wheel bearings, the wheel must be replaced to insure safe operational condition.

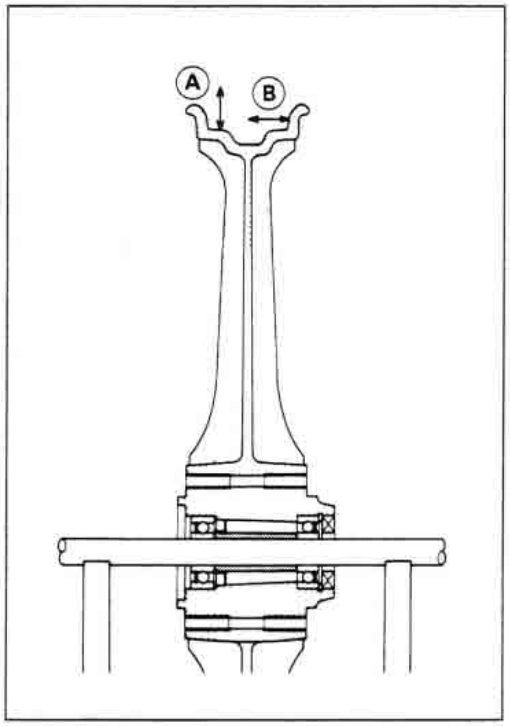

Axle Inspection

- Visually inspect the front and rear axle for damages.
- ★If the axle is damaged or bent, replace it.
- Measure the axle runout with a dial gauge.
- ★If axle runout exceeds the service limit, replace the axle.

Axle Runout/100 mm

Standard:	**0.05 mm or less**
Service Limit:	**0.2 mm**

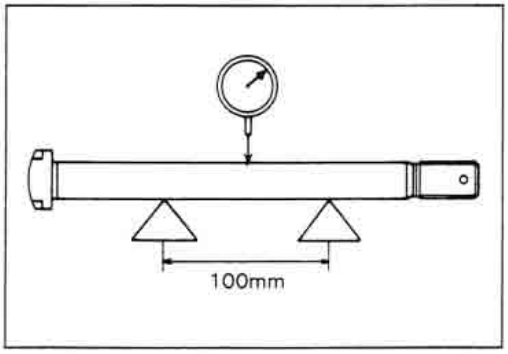

Balance Inspection

- Remove the wheel.
- Support the wheel so that it can be spun freely.
- Spin the wheel lightly, and mark [A] the wheel at the top when the wheel stops.
- ○Repeat this procedure several times. If the wheel stops of its own accord in various positions, it is well balanced.
- ★If the wheel always stops in one position, adjust the wheel balance.

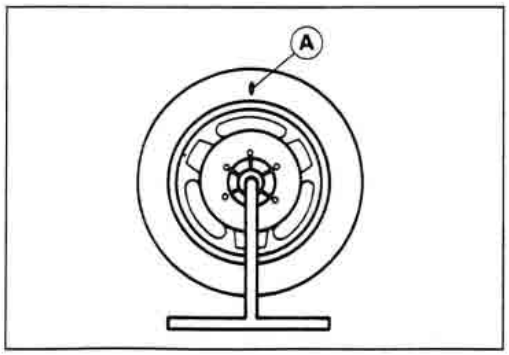

Balance Adjustment

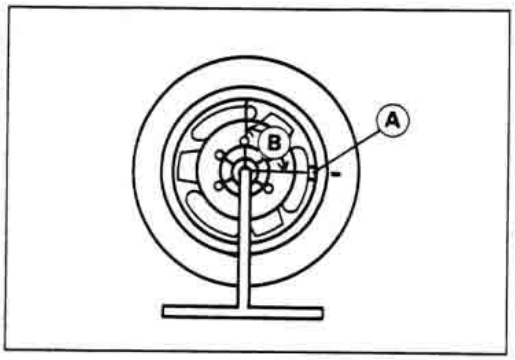

- If the wheel always stops in one position, provisionally attach a balance weight [A] on the rim at the marking using adhesive tape.
- Rotate the wheel ¼ turn [B], and see whether or not the wheel stops in this position. If it does, the correct balance weight is being used.

★If the wheel rotates and the weight goes up, replace the weight with the next heavier size. If the wheel rotates and the weight goes down, replace the weight with the next lighter size. Repeat these steps until the wheel remains at rest after being rotated ¼ turn.

- Rotate the wheel another ¼ turn and then another ¼ turn to see if the wheel is correctly balanced.
- Repeat the entire procedure as many times as necessary to achieve correct wheel balance.
- Permanently install the balance weight.

Balance Weight

Part Number	Weight(grams)
41075-1014	10
41075-1015	20
41075-1016	30

Balance Weight Removal

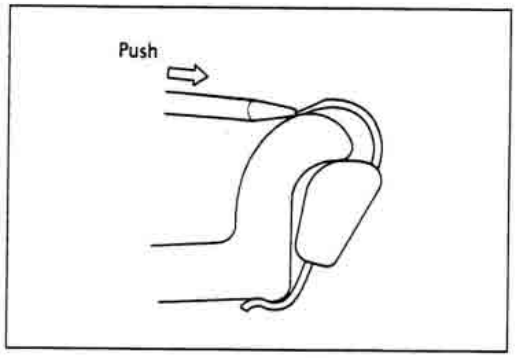

(a) When the tire is not on the rim.

- Push the blade portion toward the outside with a regular tip screw driver, and slip the weight off the rim flange.
- Discard the used balance weight.

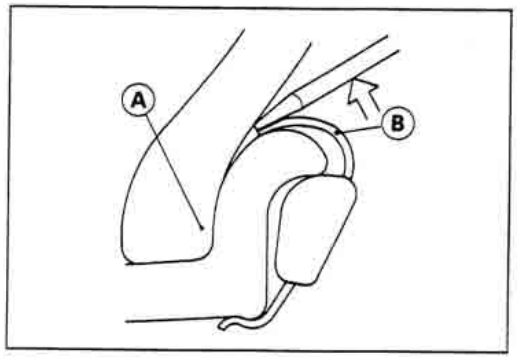

(b) When the tire is on the rim.

- Pry the balance weight off the rim flange using a regular tip screw driver as shown in the figure.

○ Insert a tip of the screw driver between the tire bead [A] and weight blade [B] until the end of the tip reaches the end of the weight blade.

○ Push the driver grip toward the tire so that the balance weight slips off the rim flange.

- Discard the used balance weight.

Balance Weight Installation

- Check if the weight portion has any play on the brade-and-clip plate.

★If it does, discard it.

⚠WARNING

If the balance weight has any play on the rim flange, the blade and/or clip have been stretched. Replace the loose balance weight.
Do not reuse used balance weight.

- Lubricate the balance weight blade, tire bead, and rim flange with a soap and water solution or rubber lubricant. This helps the balance weight slip onto the rim flange.

CAUTION
Do not lubricate the tire bead with engine oil or petroleum distillates because they will deteriorate the tire.

- Install the balance weight on the rim.
  - Slip the weight on the rim flange by pushing or lightly hammering the weight in the direction shown in the figure.
  - Check that the blade and weight seat fully on the rim flange, and that the clip is hooked over the rim ridge and reaches rim flat portion.

Installing Balance Weight

(a) Press or lightly hammer the weight in.

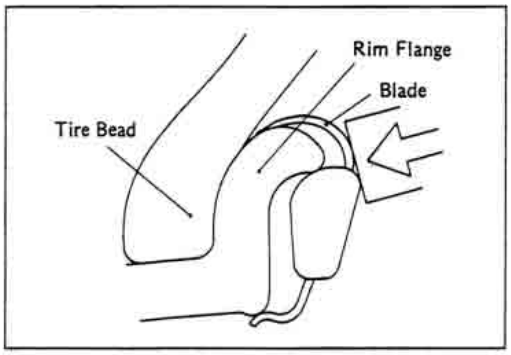

(b) Installation completed.

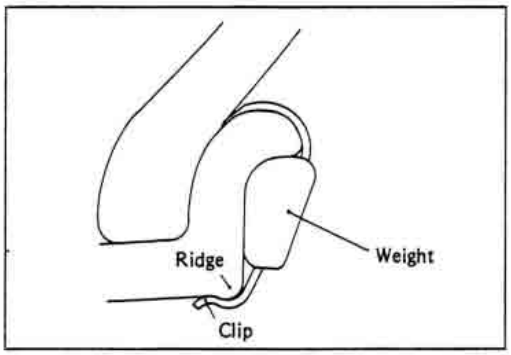

- When required total weight exceeds 20g, install balance weight at both sides of rim flange as shown.

Required Total Weight	Weight Selection	
	One Side [A]	Other Side [B]
20g	10g	10g
30g	20g	10g
40g	20g	20g
50g	30g	20g
60g	30g	30g
70g	20g + 20g	30g
80g	20g + 20g	20g + 20g
90g	20g + 30g	20g + 20g

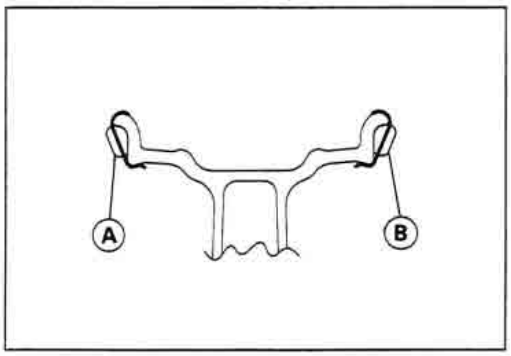

Tires

Air Pressure Inspection/Adjustment

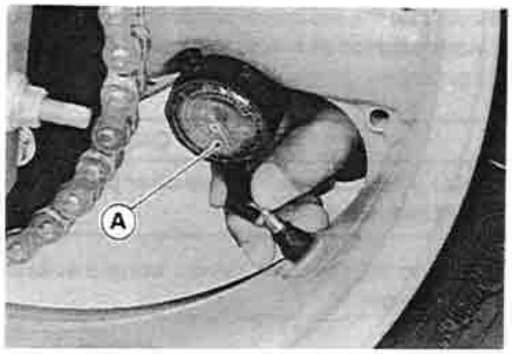

- Measure the tire air pressure with an air pressure gauge [A] when the tires are cold.

★Adjust the tire air pressure according to the specifications if necessary.

Air Pressure (when cold)

Front	Up to 184 kg (406 lb)	250 kPa (2.5 kg/cm², 36 psi)
Rear	Up to 184 kg (406 lb)	290 kPa (2.9 kg/cm², 41 psi)

Tire Inspection

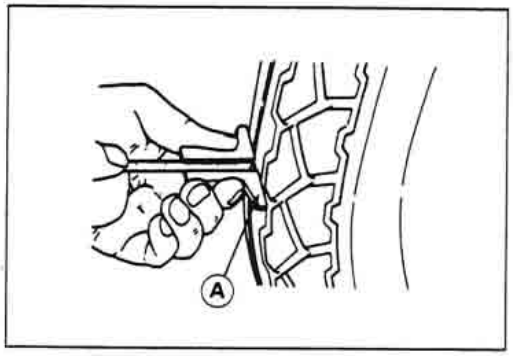

- Remove any imbedded stones or other foreign particles from the tread.
- Visually inspect the tire for cracks and cuts, replacing the tire in case of damage. Swelling or high spots indicate internal damage, requiring tire replacement.
- Measure the tread depth at the center of the tread with a depth gauge [A]. Since the tire may wear unevenly, take measurement at several places.

★If any measurement is less than the service limit, replace the tire.

Tread Depth

Front:

Standard: **3.4 mm (BRIDGESTONE)**
4.0 mm (DUNLOP)
3.7 mm (PIRELLI, METZELER)
4.2 mm (MICHELIN)

Service Limit: **1 mm**

Rear:

Standard: **5.8 mm (BRIDGESTONE)**
5.6 mm (DUNLOP)
5.5 mm (PIRELLI, METZELER)
6.5 mm (MICHELIN)

Service Limit: **2 mm(Up to 130 km/h)**
3 mm(Over 130 km/h)

⚠WARNING

To ensure safe handling and stability, use only the recommended standard tires for replacement, inflated to the standard pressure.

NOTE

○ *Check and balance the wheel when a tire is replaced with a new one.*

Tire Removal

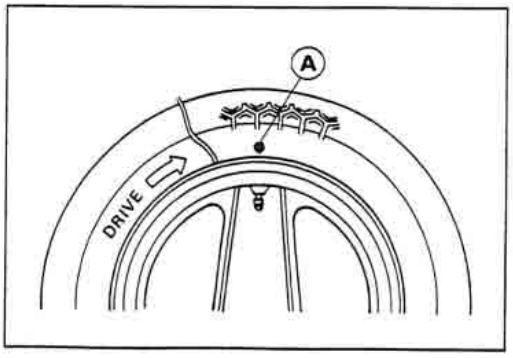

- Remove:
  Wheel (see Front Wheel Removal, Rear Wheel Removal)
  Disc (s)
  Valve Core (let out the air)
- To maintain wheel balance, mark the valve stem position [A] on the tire with chalk so that the tire can be reinstalled in the same position.

- Lubricate the tire beads and rim flanges on both sides with a soap and water solution or rubber lubricant. This helps the tire beads slip off the rim flanges.

CAUTION
Never lubricate with engine oil or petroleum distillates because they will deteriorate the tire.

- Remove the tire from the rim using a suitable commercially available tire changer.

NOTE

○ *The tires cannot be removed with hand tools because they fit the rims too tightly.*

Tire Installation

- Inspect the rim and tire, and replace them if necessary.
- Clean the sealing surfaces of the rim and tire, and smooth the sealing surfaces of the rim with a fine emery cloth if necessary.
- Remove the air valve and discard it.

CAUTION
Replace the air valve whenever the tire is replaced. Do not reuse the air valve.

- Install a new valve in the rim.

○ Remove the valve cap, lubricate the stem seal [A] with a soap and water solution or rubber lubricant, and pull the valve stem through the rim from the inside out until it snaps into place.

CAUTION
Do not use engine oil or petroleum distillates to lubricate the stem because they will deteriorate the rubber.

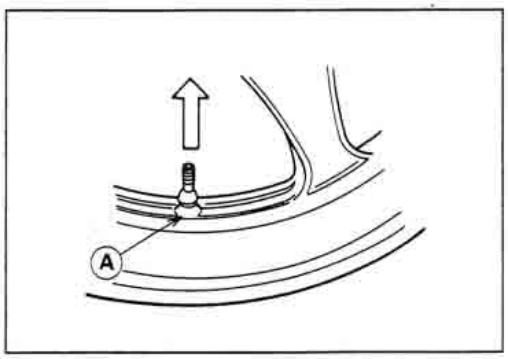

[A] Valve Cap
[B] Valve Core
[C] Stem Seal
[D] Valve Stem
[E] Valve Seat
[F] Valve Opened

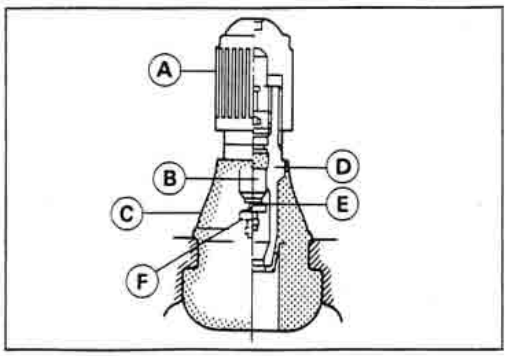

- Apply a soap and water solution, or rubber lubricant to the rim flange and tire beads.

- Check the tire rotation mark on the front and rear tires and install them on the rim accordingly.

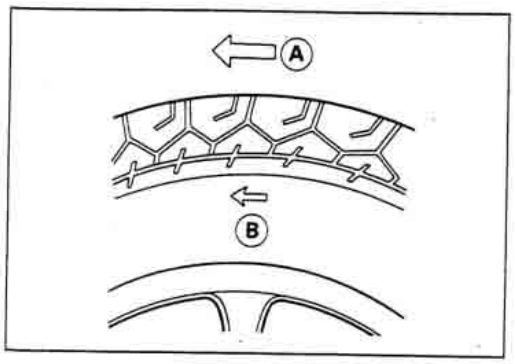

NOTE

○ *The direction of the tire rotation [A] is shown by an arrow [B] on the tire sidewall.*

- Position the tire on the rim so that the valve is at the tire balance mark (the chalk mark made during removal, or the yellow paint mark on a new tire).
- Install the tire on the rim using a suitable commercially available tire changer.
- Lubricate the tire beads and rim flanges with a soap and water solution or rubber lubricant to help seat the tire beads in the sealing surfaces of the rim while inflating the tire.
- Center the rim in the tire beads, and inflate the tire with compressed air until the tire beads seat in the sealing surfaces.

⚠WARNING

Be sure to install the valve core whenever inflating the tire, and do not inflate the tire to more than 400 kPa(4.0 kg/cm², 57 psi). Overinflation can explode the tire with possibility of injury and loss of life.

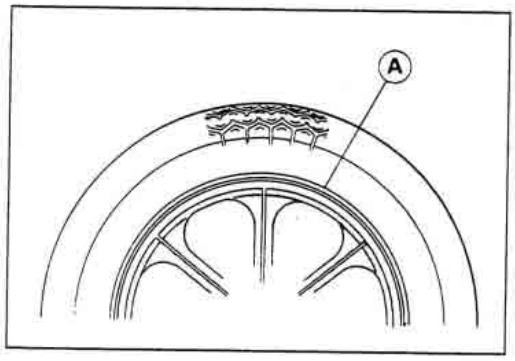

- Check to see that the rim lines [A] on both sides of the tire sidewalls are parallel with the rim flanges.

★ If the rim flanges and tire sidewall rim lines are not parallel, remove the valve core.

- Lubricate the rim flanges and tire beads.
- Install the valve core and inflate the tire again.
- After the tire beads seat in the rim flanges, check for air leaks.

○ Inflate the tire slightly above standard inflation.

○ Use a soap and water solution or submerge the tire, and check for bubbles that would indicate leakage.

- Adjust the air pressure to the specified pressure.
- Install the brake disc(s) so that the disc rotation mark aligns with the tire rotation.
- Adjust the wheel balance.

Repair

Currently two types of repair for tubeless tires have come into wide use. One type is called a temporary (external) repair which can be carried out without removing the tire from the rim, and the other type is called permanent (internal) repair which requires tire removal. It is generally understood that higher running durability is obtained by permanent (internal) repairs than by temporary (external) ones. Also, permanent (internal) repairs have the advantage of permitting a thorough examination for secondary damage not visible from external inspection of the tire. For these reasons, Kawasaki does not recommend temporary (external) repair. Only appropriate permanent (internal) repairs are recommended. Repair methods may vary slightly from make to make. Follow the repair methods indicated by the manufacturer of the repair tools and materials so that safe results can be obtained.

Hub Bearing

Hub Bearing Removal

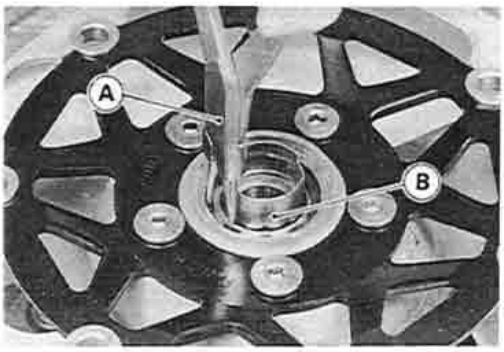

- Remove the wheel, and take out the following.
  - Collars
  - Coupling (out of rear hub)
  - Grease Seals
  - Circlips

Special Tool – Inside Circlip Pliers: 57001-143 [A]

Speedometer Gear Drive [B] (out of front hub)

- Take the bearings [A] out of the hub.

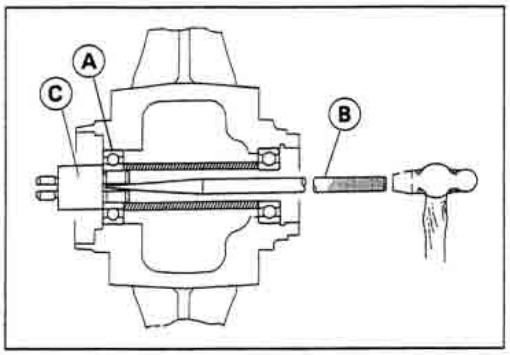

CAUTION
Do not lay the wheel on the ground with the disc facing down. This can damage or warp the disc. Place blocks under the wheel so that the disc does not touch the ground.

Special Tools – Bearing Remover Shaft: 57001-1265 [B]
Bearing Remover Head, Φ20 x Φ22: 57001-1293 [C]

Hub Bearing Installation

- Before installing the wheel bearings, blow any dirt or foreign particles out of the hub with compressed air to prevent contamination of the bearings.
- Replace the bearings with new ones.
- Press in the bearings until they are bottomed.

Special Tool – Bearing Driver Set: 57001-1129 [A]

NOTE

○ *Install the bearings so that the marked side faces out.*

- Replace the circlips with new ones.

Special Tool – Inside Circlip Pliers: 57001-143

- Replace the grease seals with new ones.
- Press in the grease seals so that the seal surface is flush with the end of the hole.

○ Apply high temperature grease to the grease seal lips.

Special Tool – Bearing Driver Set: 57001-1129 [A]

Hub Bearing Inspection

NOTE

○ *It is not necessary to remove any bearings for inspection. If any bearings are removed, they will need to be replaced with new ones.*

- Spin it by hand to check its condition.

★ If it is noisy, does not spin smoothly, or has any rough spots, it must be replaced.

- Examine the bearing seal for tears or leakage.

★ If the seal is torn or is leaking, replace the bearing.

Speedometer Gear Housing

Disassembly and Assembly

NOTE

○*It is recommended that the assembly be replaced rather than attempting to repair the components.*

● Install the speedometer gear housing so that it fits in the speedometer gear drive notches (see Front Wheel Installation).

Lubrication

● Clean and grease [A] the speedometer gear housing [B].

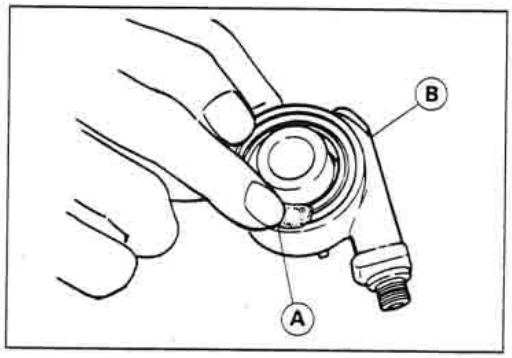

Final Drive

Table of Contents

Exploded View

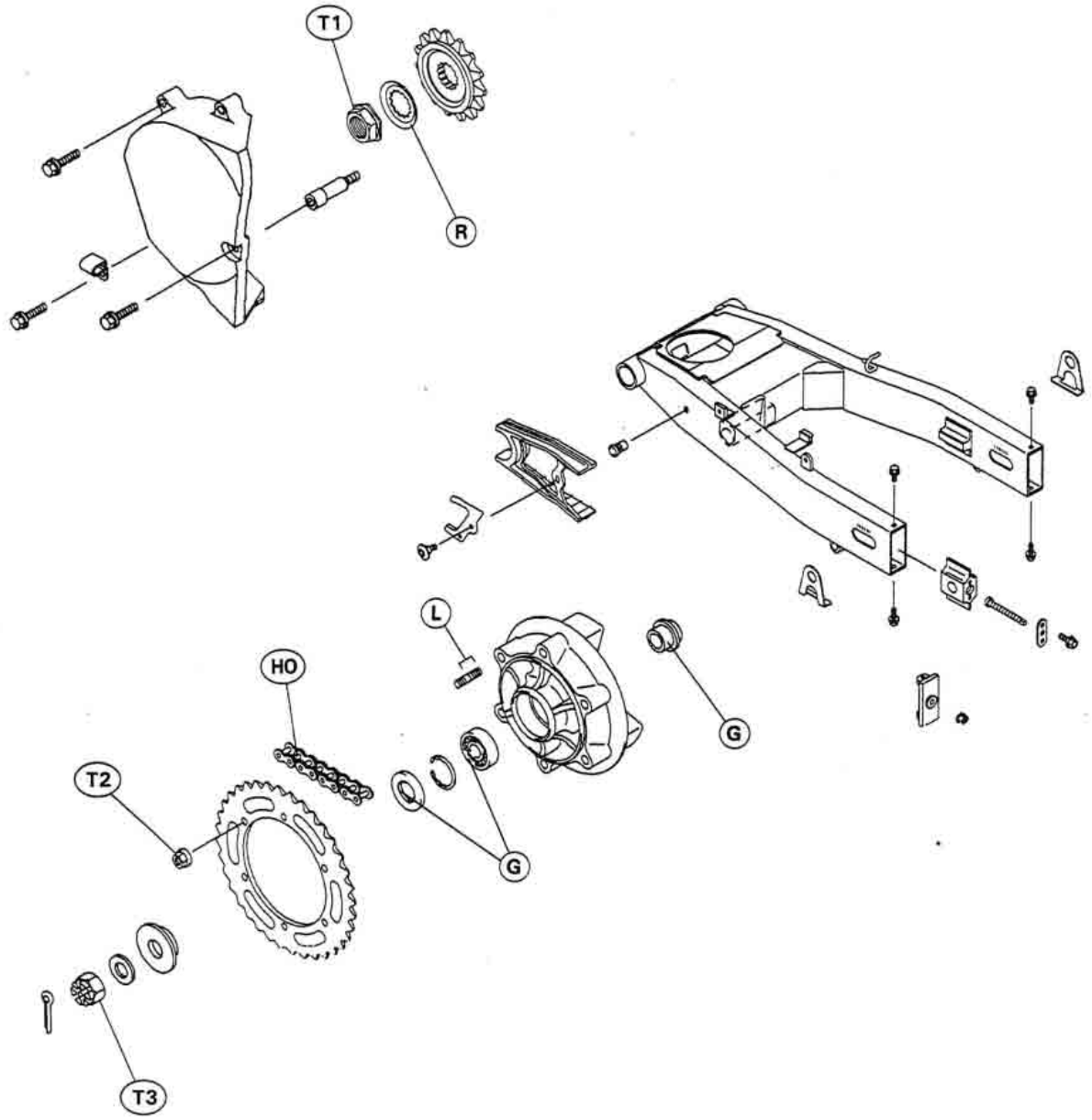

G : Apply grease.
HO: Apply heavy oil.
L : Apply a non-permanent locking agent.
R : Replacement Parts

T1 : 125 N-m (13.0 kg-m, 94 ft-lb)
T2 : 74 N-m (7.5 kg-m, 54 ft-lb)
T3 : 110 N-m (11.0 kg-m, 80 ft-lb)

Specifications

Item	Standard	Service Limit
Drive Chain:		
Chain slack	35 ~ 40 mm	(Usable range) 35 ~ 45 mm
20-link length	317.5 ~ 318.2 mm	323 mm
Standard chain		
Make	ENUMA	– – –
Type	EK525MV-X, Endless	– – –
Link	108 links	– – –
Sprockets:		
Rear sprocket warp	0.4 mm or less	0.5 mm

Special Tools – Inside Circlip Pliers: 57001-143
Bearing Driver Set: 57001-1129
Jack: 57001-1238

Drive Chain

Slack Inspection

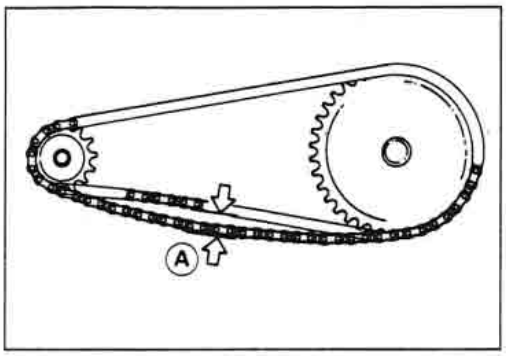

NOTE

○ *Check the slack with the motorcycle setting on its side stand.*
○ *Clean the chain if it is dirty, and lubricate it if it appears dry.*

- Check the wheel alignment (see Wheel Alignment Inspection).
- Rotate the rear wheel to find the position where the chain is tightest.
- Measure the vertical movement (chain slack) [A] midway between the sprockets.

★If the chain slack exceeds the standard, adjust it.

Chain Slack

Standard:	**35 ~ 40 mm**
Usable Range:	**35 ~ 45 mm**

Slack Adjustment

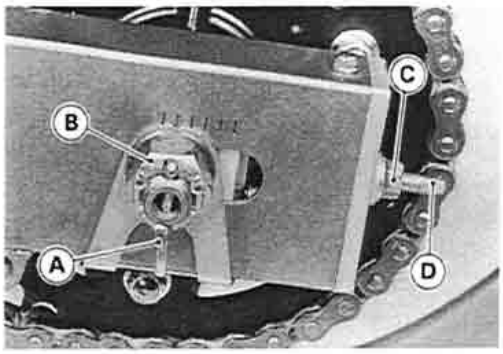

- Remove the cotter pin [A], and loosen the axle nut [B].
- Loosen the both chain adjuster locknuts [C].
- Turn the chain adjusters [D] forward or rearward until the drive chain has the correct amount of chain slack.
- The right and left notches on the alignment indicators should point to the same marks or positions on the swingarm.

⚠WARNING

Misalignment of the wheel will result in abnormal wear and may result in an unsafe riding condition.

- Tighten both chain adjuster locknuts securely.
- Tighten the axle nut.
  Torque – Rear Axle Nut: 110 N-m (11.0 kg-m, 80 ft-lb)
- Turn the wheel, measure the chain slack again at the tightest position, and readjust if necessary.
- Insert a new cotter pin and spread its ends.

Wheel Alignment Inspection Adjustment

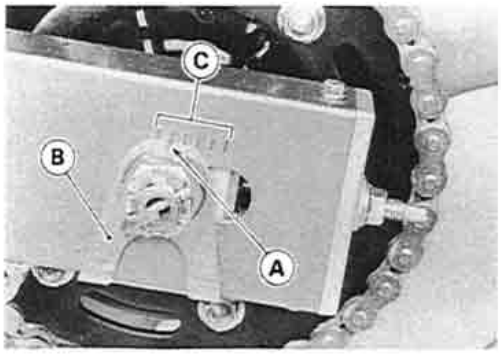

- Check that the notch [A] on the left alignment indicator [B] aligns with the same swingarm mark or position [C] that the right alignment indicator notch aligns with.

★If they are not, adjust the chain slack and align the wheel alignment (see Slack Adjustment).

NOTE

○ *Wheel alignment can be also be checked using the straightedge or string method.*

⚠WARNING

Misalignment of the wheel will result in abnormal wear, and may result in an unsafe riding condition.

Drive Chain Wear Inspection

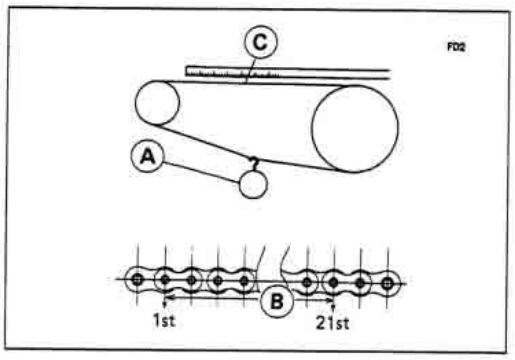

- Remove:
  Chain Cover
- Rotate the rear wheel to inspect the drive chain for damaged rollers, and loose pins and links.

★If there is any irregularity, replace the drive chain.

★Lubricate the drive chain if it appears dry.

- Stretch the chain taut by hanging a 98 N (10 kg, 20 lb) weight [A] on the chain.
- Measure the length of 20 links [B] on the straight part [C] of the chain from the pin center of the 1st pin to the pin center of the 21st pin. Since the chain may wear unevenly, take measurements at several places.

★If any measurements exceed the service limit, replace the chain. Also, replace the front and rear sprockets when the drive chain is replaced.

Drive Chain 20-link Length

Standard:	**317.5 ~ 318.2 mm**
Service Limit:	**323 mm**

⚠WARNING

If the drive chain wear exceeds the service limit, replace the chain or an unsafe riding condition may result. A chain that breaks or jumps off the sprockets could snag on the engine sprocket or lock the rear wheel, severely damaging the motorcycle and causing it to go out of control.
For safely, use only the standard chain. It is an endless type and should not be cut for installation.

Lubrication

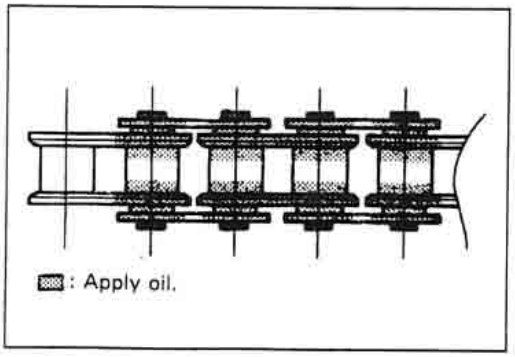

- If a special lubricant is not available, a heavy oil such as SAE 90 is preferred to a lighter oil because it will stay on the chain longer and provide better lubrication.
- If the chain appears especially dirty, clean it before lubrication.

CAUTION

The O-rings between the side plates seal in the lubricant between the pin and the bushing. To avoid damaging the O-rings and resultant loss of lubricant, observe the following rules.
Use only kerosene or diesel oil for cleaning an O-ring drive chain. Any other cleaning solution such as gasoline or trichloroethylene will cause deterioration and swelling of the O-ring.
Immediately blow the chain dry with compressed air after cleaning.
Complete cleaning and drying the chain within 10 minutes.

- Apply oil to the sides of the rollers so that oil will penetrate to the rollers and bushings. Apply the oil to the O-rings so that the O-rings will be coated with oil.
- Wipe off any excess oil.

Drive Chain Removal

- Remove:
  Rear Wheel (see Wheels/Tires chapter)
  Chain Cover Screws [A]
  Chain Cover [B]
  Swingarm (see Suspension chapter)
  Engine Sprocket Cover

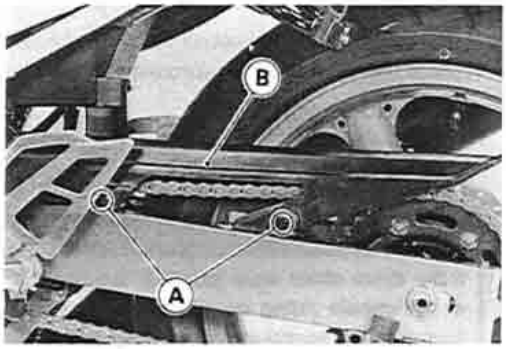

- Remove the stay bolt [A] using an Allen wrench.
- Disengage the drive chain [B] from the engine sprocket [C], and take it off the chassis.

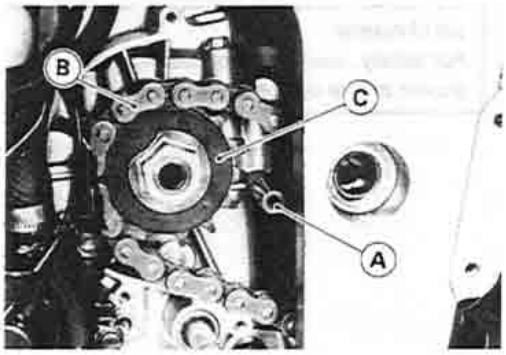

Drive Chain Installation

- Engage the drive chain with the engine sprocket.
- Install:
  Swingarm (see Suspension chapter)
  Rear Wheel (see Wheels/Tires chapter)
  Engine Sprocket Cover
  Chain Cover
- Fit the flap [A] into the slot [B] in the swingarm.
- Adjust the chain slack after installing the chain (see Slack Adjustment).

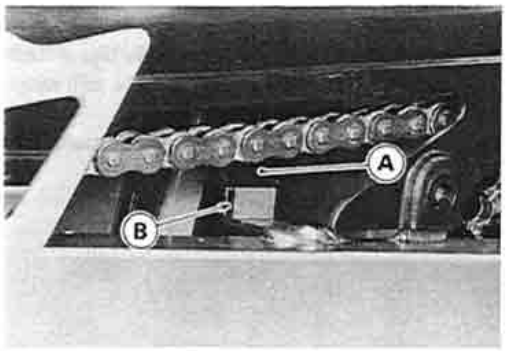

Chain Guard

Chain Guard Removal

- Remove:
  Footpeg Bracket Bolts [A]
  Chain Cover [B]

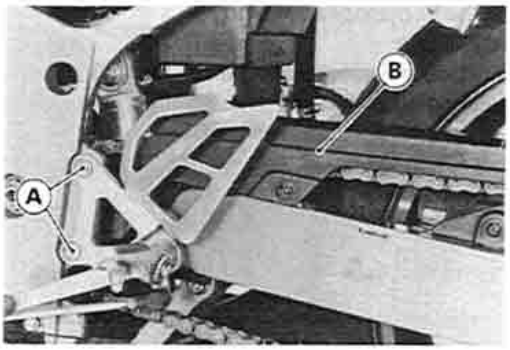

Screw [A] and Chain Guard Holder [B]

- Pull out the chain guard [C] to the rear.

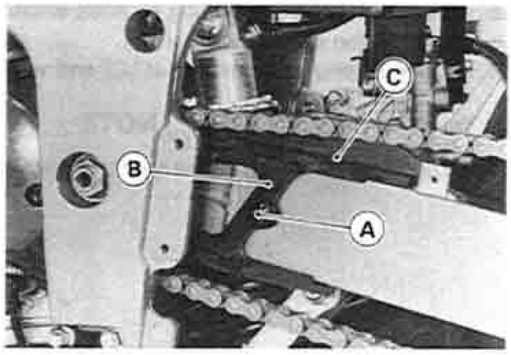

Chain Guard Installation

- Tap lightly the rear part [A] of the chain guard with a plastic mallet and install it.
- Check the drive chain slack after installation (see Slack Inspection).

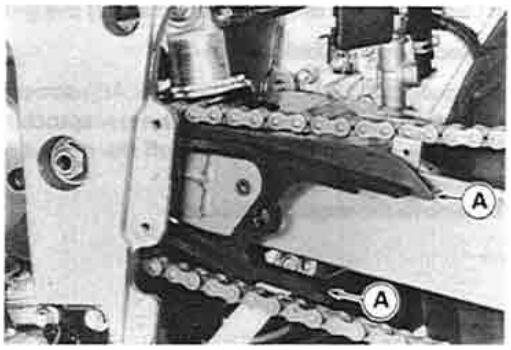

Sprocket, Coupling

Engine Sprocket Removal

- Remove:
  Lower Fairings (see Frame Chapter)
  Engine Sprocket Cover Bolts [A]
  Engine Sprocket Cover [B]
  Chain Cover

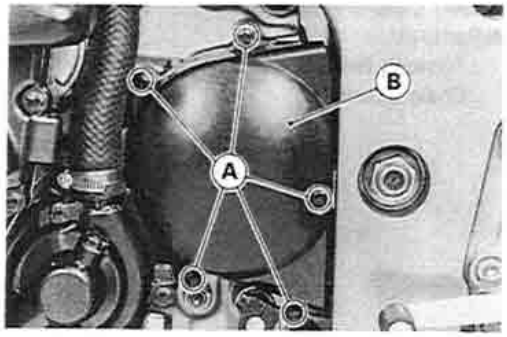

- Remove th stay bolt [A] using an Allen wrench.
- Flatten out the bended washer [B].
- Remove the engine sprocket nut [C] and washer.

NOTE

○ *When loosening the engine sprocket nut, hold the rear brake on.*

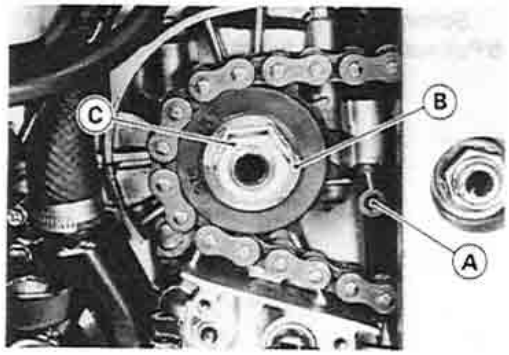

- Using the jack, raise the rear wheel off the ground.

Special Tool – Jack: 57001-1238

- Loosen the drive chain (see Slack Adjustment).
- Remove the drive chain from the rear sprocket toward the right.
- Pull the engine sprocket [A] off the output shaft [B] along with the chain.
- Remove the engine sprocket.

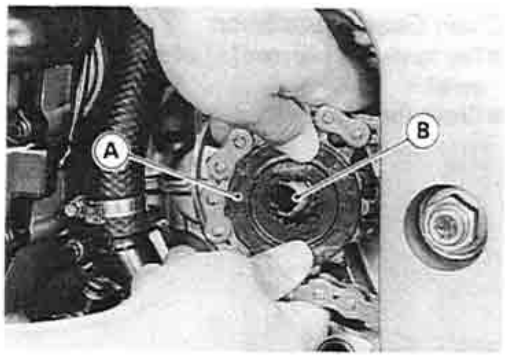

Engine Sprocket Installation

- Replace the sprocket washer and axle cotter pin.
- Install the engine sprocket onto the output shaft so that the 315 15T mark side [A] faces outwards.
- Apply oil to the threads of the output shaft and the seating surface of the engine sprocket nut.
- After torquing the engine sprocket nut, bend the one side of the washer over the nut.

NOTE

○ *Tighten the nut while applying the rear brake.*

Torque – Engine Sprocket Nut : 125 N-m (13.0 kg, 94 ft-lb)

- Adjust the drive chain slack after installing the sprocket (see Slack Adjustment).

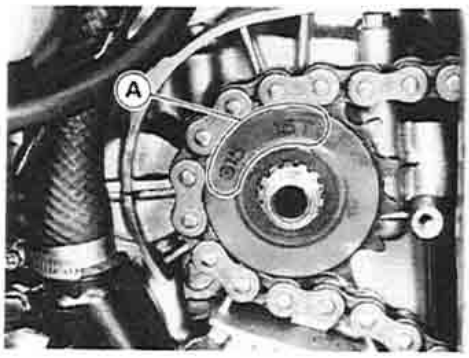

Rear Sprocket Removal

- Remove the rear wheel (see Wheel/Tires chapter).

CAUTION
Do not lay the wheel on the ground with the disc facing down. This can damage or warp the disc. Place blocks under the wheel so that the disc does not touch the ground.

- Remove the rear sprocket nuts [A].
- Remove the rear sprocket [B].

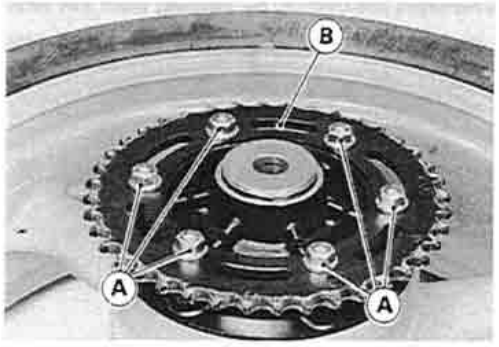

Rear Sprocket Installation

- Install the sprocket facing the tooth number marking [A] outward.
- Tighten the rear sprocket nuts.

Torque – Rear Sprocket Nut : 74 N-m (7.5 kg-m, 54 ft-lb)

- Install the rear wheel (see Wheels/ Tires chapter).

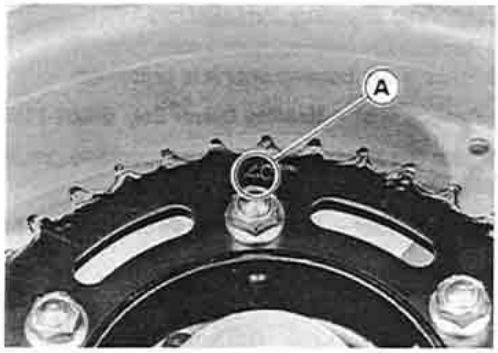

Sprocket Wear Inspection

- Visually inspect the engine and rear sprocket teeth for wear and damage.

★If the teeth are worn as illustrated, replace the sprocket, and inspect the drive chain wear (see Drive Chain Wear Inspection).

[A] Worn Tooth (Engine Sprocket)
[B] Worn Tooth (Rear Sprocket)
[C] Direction of Rotation

NOTE

○ *If a sprocket requires replacement, the chain is probably worn also. When replacing a sprocket, inspect the chain.*

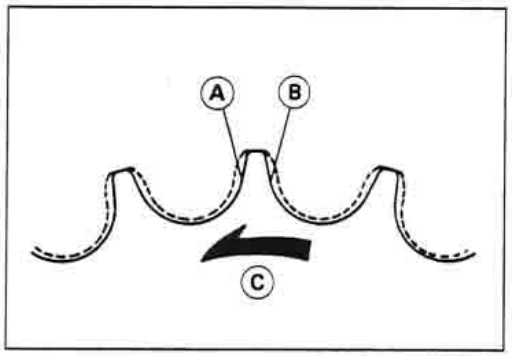

Rear Sprocket Warp Inspection

- Raise the rear wheel off the ground (see Wheels/Tires chapter) so that it will turn freely.
- Set a dial gauge [A] against the rear sprocket [B] near the teeth as shown, and rotate [C] the rear wheel to measure the sprocket runout (warp). The difference between the highest and lowest dial gauge readings is the amount of runout (warp).

★If the runout exceeds the service limit, replace the rear sprocket.

Rear Sprocket Warp

Standard:	**0.4 mm or less**
Service Limit:	**0.5 mm**

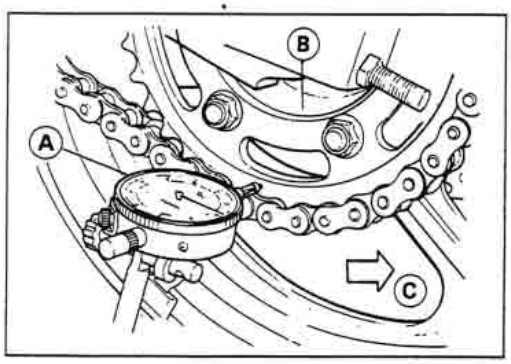

Coupling Bearing Removal

- Remove:
  Coupling
  Grease Seal
  Circlip [A]

Special Tool – Inside Circlip Pliers: 57001-143 [B]

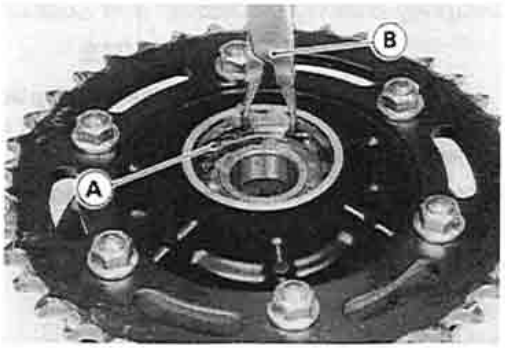

● Remove the bearing by tapping from the wheel side.

Special Tool – Bearing Driver Set: 57001-1129 [A]

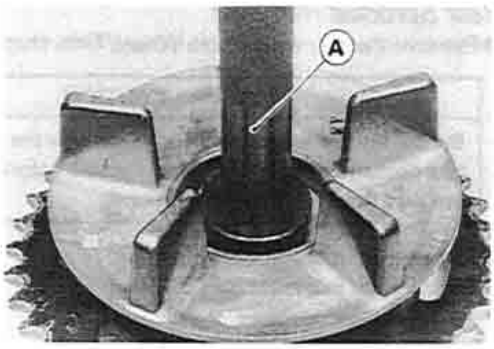

Coupling Bearing Installation

● Replace the bearing with a new one.
● Press in the bearing until it is bottomed.

Special Tool – Bearing Driver Set: 57001-1129 [A]

● Pack the bearing with high temperature grease.
● Replace the circlip with a new one.

Special Tool – Inside Circlip Pliers: 57001-143

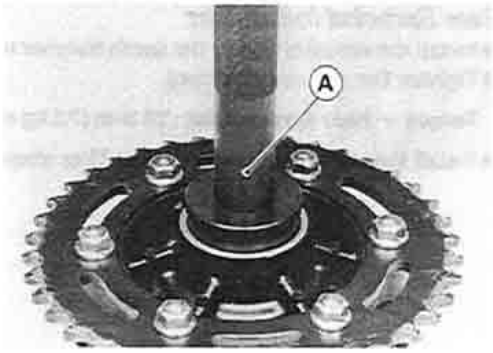

● Replace the grease seal with a new one.
● Press in the grease seal so that the seal surface is flush with the end of the hole.
○ Apply high temperature grease to the grease seal lips.

Special Tool – Bearing Driver Set: 57001-1129 [A]

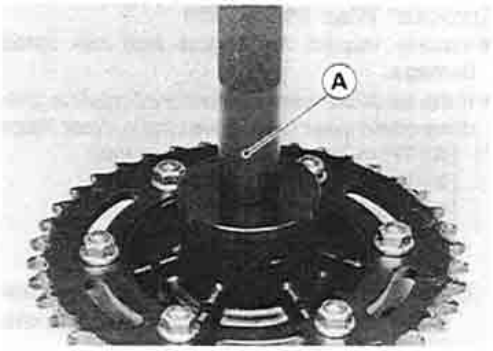

Coupling Installation

● Grease the following and install the coupling.
Ball Bearing [A]
Coupling Grease Seal [B]
Coupling Internal Surface [C]

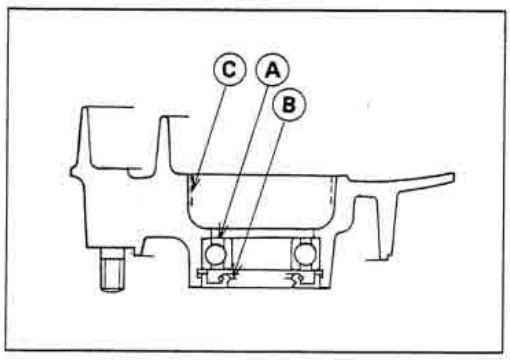

Coupling Bearing Inspection and Lubrication

NOTE

○ *It is not necessary to remove the coupling bearing for inspection and lubrication. If the bearing is removed, it will need to be replaced with a new one.*

● Wash the bearing with a high flash-point solvent, dry it (do not spin it while it is dry), and oil it. Spin it by hand to check its condition.
★ If it is noisy, does not spin smoothly, or has any rough spots, it must be replaced.

- Pack the bearing with good quality bearing grease. Turn the bearing around by hand a few times to make sure the grease is distributed uniformly inside the bearing.

Brakes

Table of Contents

Exploded View

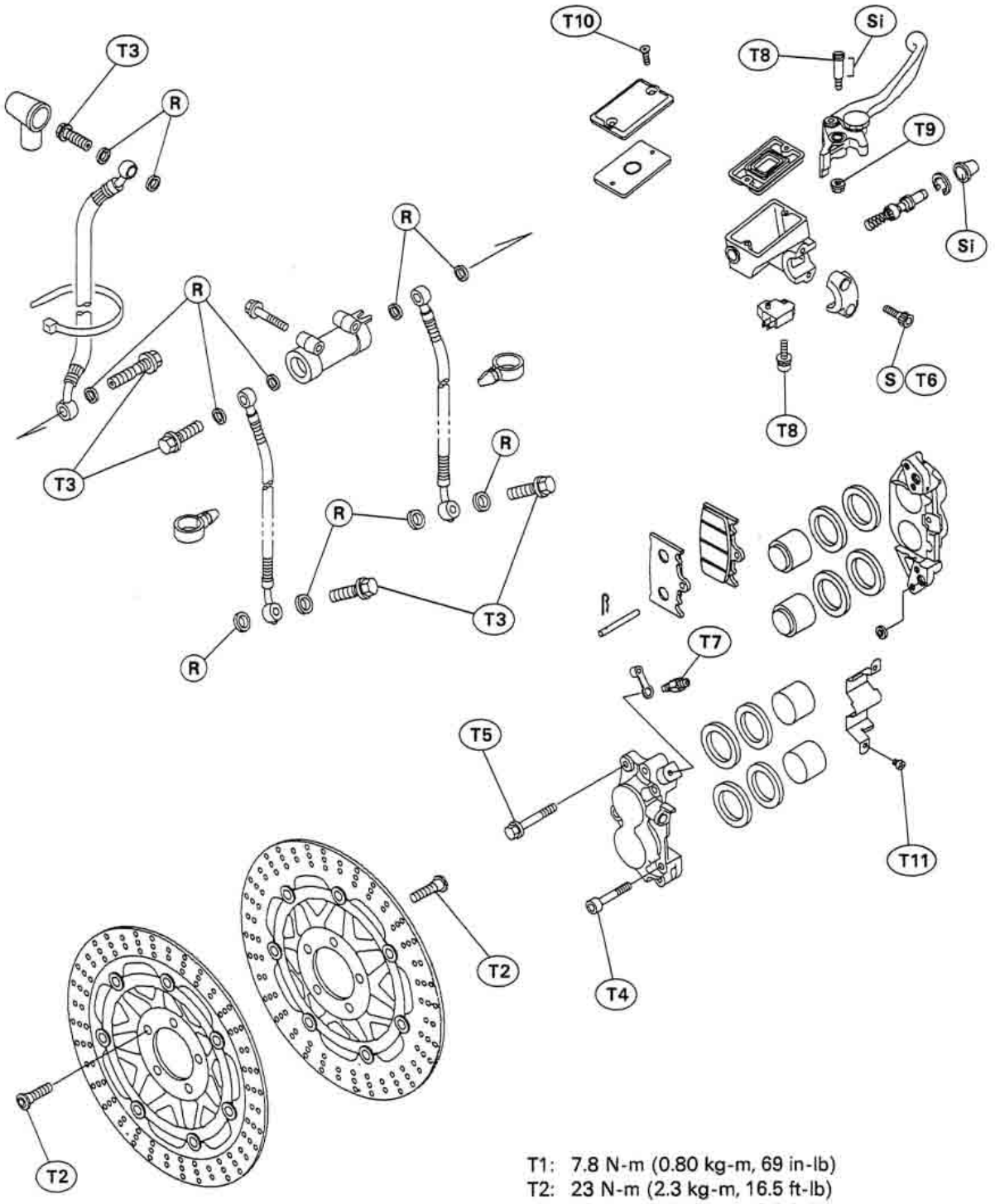

T1: 7.8 N-m (0.80 kg-m, 69 in-lb)
T2: 23 N-m (2.3 kg-m, 16.5 ft-lb)
T3: 25 N-m (2.5 kg-m, 18.0 ft-lb)
T4: 21 N-m (2.1 kg-m, 15.0 ft-lb)
T5: 34 N-m (3.5 kg-m, 25 ft-lb)
T6: 11 N-m (1.1 kg-m, 95 in-lb)
T7: 18 N-m (1.8 kg-m, 13.0 ft-lb)
T8: 1.0 N-m (0.10 kg-m, 9 in-lb)
T9: 5.9 N-m (0.60 kg-m, 52 in-lb)
T10: 1.5 N-m (0.15 kg-m, 13 in-lb)
T11: 2.9 N-m (0.30 kg-m, 26 in-lb)

G: Apply grease.
R: Replacement Parts
S: Follow the specific tightening sequence.
Si: Apply silicone grease (ex. PBC grease)

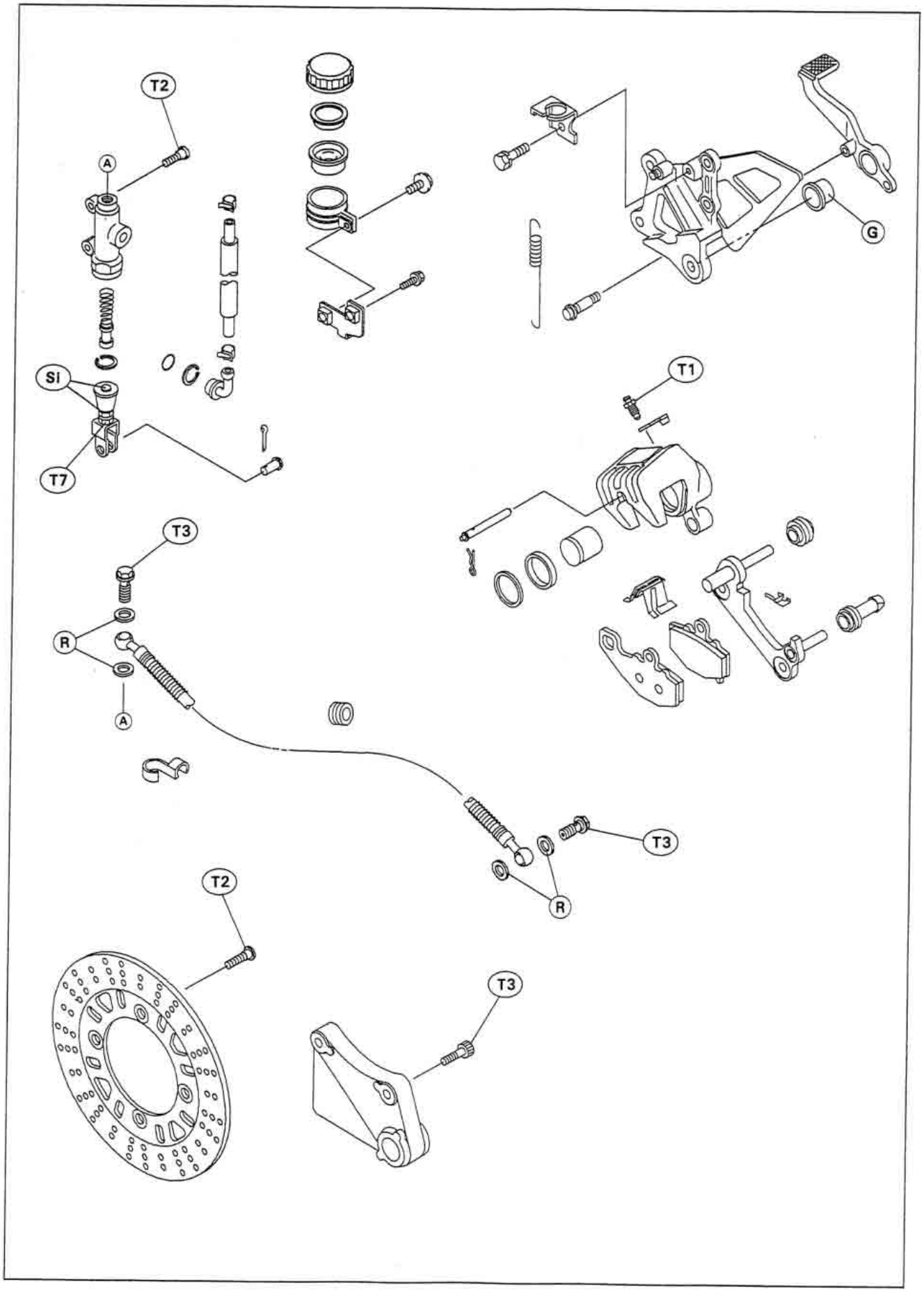
T2
A
SI
T7
T1
G
T3
R
A
T3
R
T2
T3

Specifications

Item		Standard	Service Limit
Brake Lever, Brake Pedal:			
Brake lever position		4-way adjustable (to suit rider)	– – –
Brake lever free play		Non-adjustable	– – –
Pedal free play		Non-adjustable	– – –
Pedal position		About 43 mm below footpeg top	– – –
Brake Fluid:			
Grade		D.O.T.4	– – –
Brand (recommended)		Castrol Girling-Universal	– – –
		Castrol GT (LMA)	– – –
		Castrol Disc Brake Fluid	– – –
		Check Shock Premium Heavy Duty	– – –
Brake Pads:			
Lining thickness:	Front	4 mm	1 mm
	Rear	5 mm	1 mm
Brake Discs:			
Thickness:	Front	3.8 ~ 4.2 mm	3.5 mm
	Rear	5.8 ~ 6.2 mm	5.5 mm
Runout		0.2 mm or less	0.3 mm

Special Tools – Inside Circlip Pliers: 57001-143
Jack: 57001-1238

Brake Pedal

Brake Pedal Position Inspection

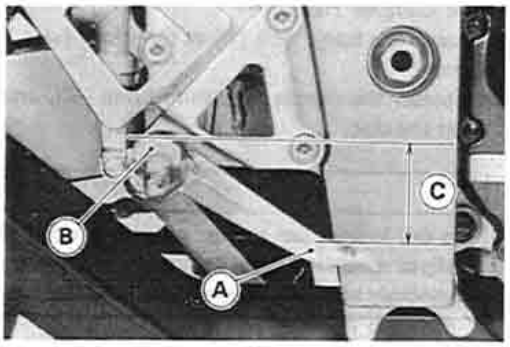

● Check that the brake pedal [A] is in the correct position.
[B] Footpeg

Pedal Position [C]
Standard: About 43 mm below top of footpeg

★If it is incorrect, adjust the brake pedal position.

Brake Pedal Position Adjustment

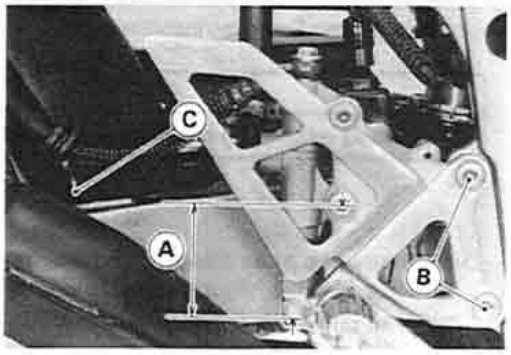

NOTE

○ *Usually it is not necessary to adjust the pedal position, but always adjust it when the master cylinder is disassembled or pedal position is incorrect.*

● Measure the length indicated in the figure.

Length [A]
Standard: 67 ± 1 mm

★If it is specified length, the brake pedal may be deformed or incorrectly installed.

★If it is not within the specified length, adjust the push rod in the master cylinder as following.

○ Remove:
Bracket Mounting Bolts [B]
Brake Hose clamp [C]

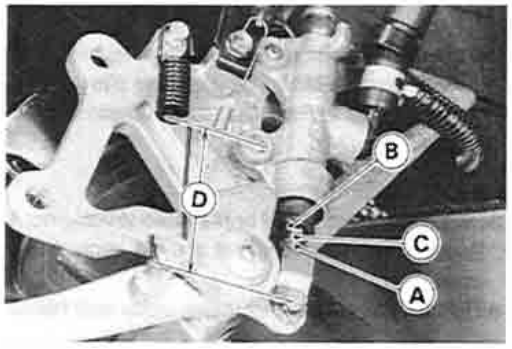

○ Loosen the push rod locknut [A].
○ Turn the hex head [B] of the push rod [C] to obtain the specified length [D].
○ Tighten the locknut.

Torque – Rear Master Cylinder Push Rod Locknut: 18 N-m (1.8 kg-m, 13.0 ft-lb)

● Check the brake light switch operation (see Rear Brake Light Switch Adjustment in Electrical System chapter).

Calipers

Front Caliper Removal

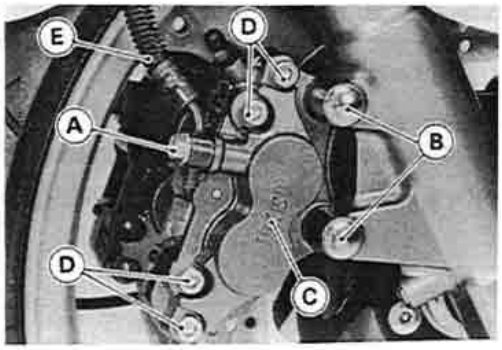

- Loosen the banjo bolt [A] at the brake hose lower end, and tighten it loosely.
- Unscrew the caliper mounting bolts [B], and detach the caliper [C] from the disc.

CAUTION
Do not loosen the caliper assembly bolts [D]. Take out only the caliper mounting bolts for caliper removal. Loosening the caliper assembly bolts will cause brake fluid leakage.

- Unscrew the banjo bolt and remove the brake hose [E] from the caliper (see Brake Hose Removal/Installation).

CAUTION
Immediately wash away any brake fluid that spills.

NOTE

○ *If the caliper is to be disassembled after removal and if compressed air is not available, disassemble the caliper before the brake hose is removed (see Front Caliper Disassembly).*

Rear Caliper Removal

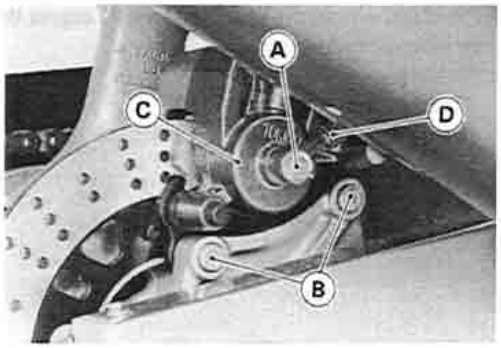

- Loosen the banjo bolt [A] at the brake hose lower end, and tighten it loosely.
- Unscrew the caliper mounting bolts [B], and detach the caliper [C] from the disc.
- Unscrew the banjo bolt and remove the brake hose [D] from the caliper (see Brake Hose Removal/Installation).

CAUTION
Immediately wash away any brake fluid that spills.

NOTE

○ *If the caliper is to be disassembled after removal and if compressed air is not available, disassemble the caliper before the brake hose is removed (see Rear Caliper Disassembly).*

Caliper Installation

- Install the caliper and brake hose lower end.
- ○ Replace the washers that are on each side of hose fitting with new ones.
- Tighten the caliper mounting bolts and banjo bolt.

Torque – Caliper Mounting Bolts (Front): 34 N-m (3.5 kg-m, 25 ft-lb)
Caliper Mounting Bolts (Rear): 25 N-m (2.5 kg-m, 18.0 ft-lb)
Brake Hose Banjo Bolt: 25 N-m (2.5 kg-m, 18.0 ft-lb)

- Check the fluid level in the brake reservoirs.
- Bleed the brake line (see Bleeding the Brake Line).
- Check the brake for good braking power, no brake drag, and no fluid leakage.

⚠WARNING

Do not attempt to drive the motorcycle until a full brake lever or pedal is obtained by pumping the brake lever or pedal until the pads are against the disc. The brakes will not function on the first application of the lever or pedal if this is not done.

Front Caliper Disassembly

- Remove the pad spring and brake pads (see Front Brake Pad Removal).
- Remove the front caliper.
- Remove the front caliper assembly bolts [A] and split the front caliper.
- Remove the piston insulators and the O-rings.

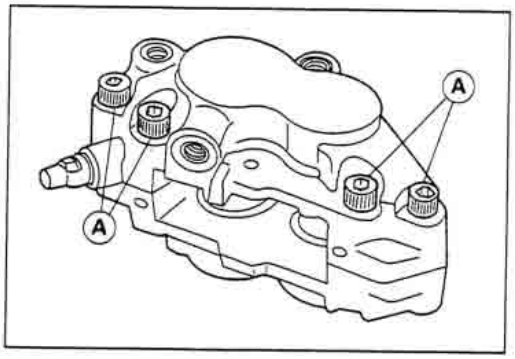

- Using compressed air, remove the pistons. One way to remove the pistons is as follows.

○ Install a rubber gasket [A] and a wooden board [B] more than 10 mm thick on the caliper half, and fasten them together with a suitable bolt and nut as shown. Leave one of the oil passages [C] open.

○ Lightly apply compressed air [D] to the oil passage until the pistons hit the rubber gasket. Block the hose joint opening [E] during this operation if the caliper half has the opening.

[F] Bolt and Nut
[G] Oil Passage sealed by Rubber Gasket.
[H] Push down.

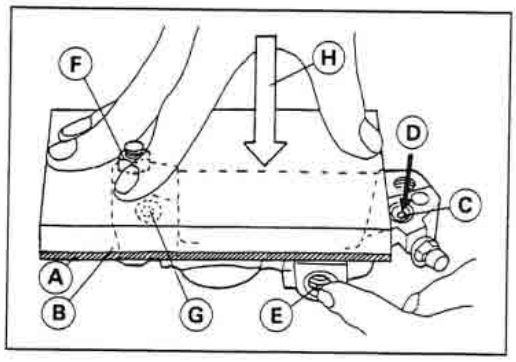

⚠WARNING

To avoid serious injury, never place your fingers or palm in front of the piston. If you apply compressed air into the caliper, the piston may crush your hand or fingers.

○ Pull out the pistons by hand.

- Remove the dust seals [A] and fluid seals [B].
- Remove the bleed valve [C] and rubber cap [D].
- Repeat the previous step to remove the pistons from the other side of the caliper body.

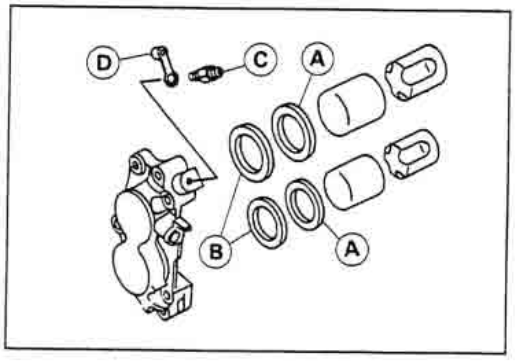

NOTE

○ *If compressed air is not available, do as follows for both calipers coincidentally, with the brake hose connected to the caliper.*

○ *Prepare a container for brake fluid, and perform the work above it.*

○ *Remove the spring and pads (see Front Brake Pad Removal).*

○ *Pump the brake lever until the pistons come out of the cylinders, and then disassemble the caliper.*

Front Caliper Assembly

- Clean the caliper parts except for the pads.

CAUTION
For cleaning the parts, use only disc brake fluid, isopropyl alcohol, or ethyl alcohol.

- Install the bleed valve and rubber cap.

Torque – Bleed Valve: 7.8 N-m (0.80 kg-m, 69 in-lb)

- Replace the fluid seals [A] with new ones.
  - Apply brake fluid to the fluid seals, and install them into the cylinders by hand.
- Replace the dust seals [B] with new ones if they are damaged.
  - Apply brake fluid to the dust seals, and install them into the cylinders by hand.

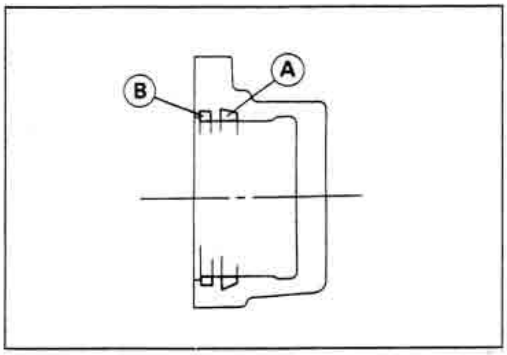

- Replace the O-rings [A] if they are damaged.
- Apply brake fluid to the outside of the pistons, and push them into each cylinder by hand.
- Be sure to install the O-rings.
- Tighten the caliper assembly bolts.

Torque – Front Caliper Assembly Bolts: 21 N-m (2.1 kg-m, 15.0 ft-lb)

- Install the piston insulators [B].

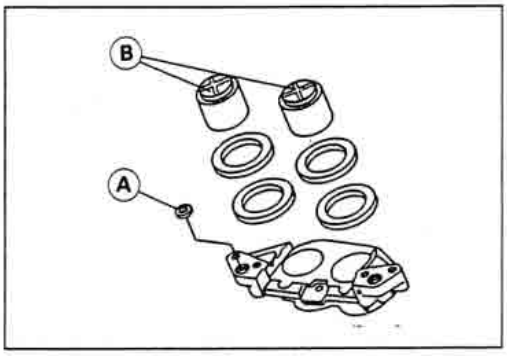

- Install the pads (see Front Brake Pad Installation).
- Wipe up any spilled brake fluid on the caliper with wet cloth.

Rear Caliper Disassembly

- Remove the rear caliper.
- Remove the pads and anti-rattle spring (see Rear Brake Pad Removal).
- Remove the piston insulator.
- Using compressed air, remove the piston.
  - Cover the caliper opening with a clean, heavy cloth [A].
  - Remove the piston by lightly applying compressed air [B] to where the brake line fits into the caliper.

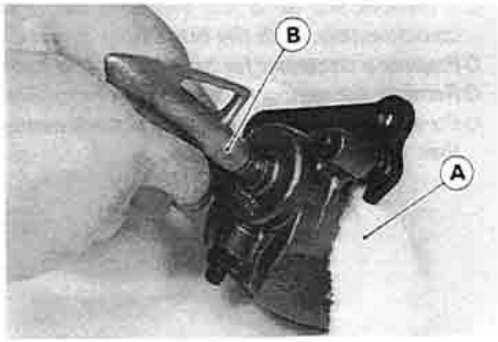

⚠WARNING

To avoid serious injury, never place your fingers or palm inside the caliper opening. If you apply compressed air into the caliper, the piston may crush your hand or fingers.

- Remove the dust seal and fluid seal.
- Remove the bleed valve and rubber cap.

NOTE

- *If compressed air is not available, do as follows with the brake hose connected to the caliper.*
- *Prepare a container for brake fluid, and perform the work above it.*
- *Remove the pads and spring (see Rear Brake Pad Removal).*
- *Pump the brake pedal to remove the caliper piston.*

Rear Caliper Assembly

- Clean the caliper parts except for the pads.

CAUTION

For cleaning the parts, use only disc brake fluid, isopropyl alcohol, or ethyl alcohol.

- Install the bleed valve and rubber cap.

Torque – Bleed Valve: 7.8 N-m (0.80 kg-m, 69 in-lb)

- Replace the fluid seal [A] with a new one.
- Apply brake fluid to the fluid seal, and install it into the cylinder by hand.
- Replace the dust seal [B] with a new one if it is damaged.
- Apply brake fluid to the dust seal, and install it into the cylinder by hand.

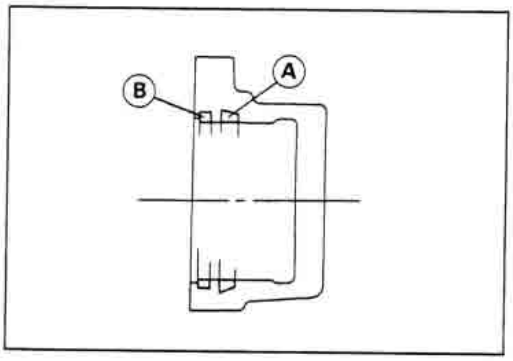

- Apply brake fluid to the outside of the piston, and push it into the cylinder by hand.
- Replace the shaft rubber friction boot [A] and dust cover [B] if they are damaged.
- Apply a thin coat of PBC (Poly Butyl Cuprysil) grease to the caliper holder shafts [C] and holder holes [D] (PBC is a special high temperature, water-resistance grease).

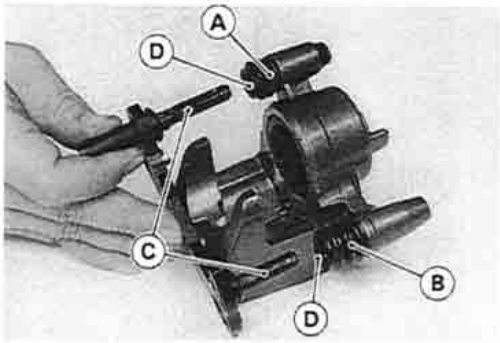

- Install the anti-rattle spring [A] in the caliper as shown.
- Install the piston insulator.
- Install the pads (see Rear Brake Pad Installation).
- Wipe up any spilled brake fluid on the caliper with wet cloth.

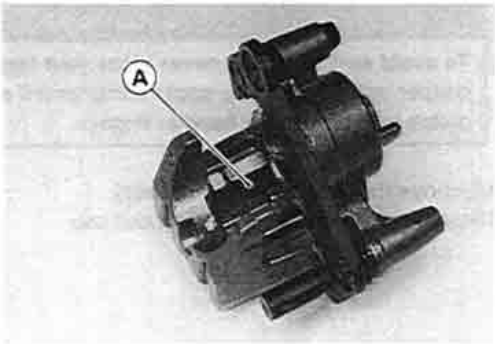

Brake Pads

Front Brake Pad Removal

- Unscrew the caliper mounting bolts.
- Detach the caliper from the disc.
- Unscrew the pad spring screws [A], and remove the pad spring [B].

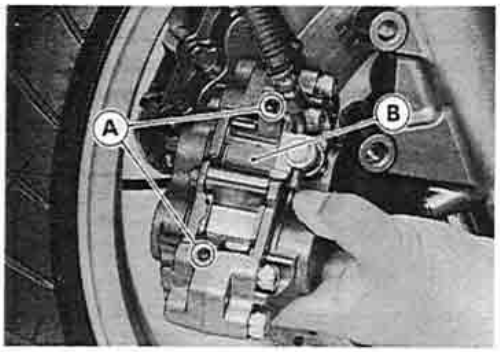

- Draw out the clip [A], and take off the pad pin [B].
- Remove the brake pads [C].

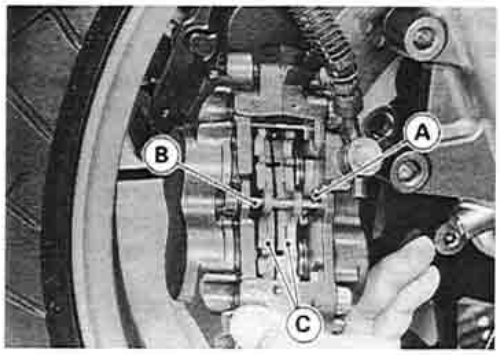

Front Brake Pad Installation

- Push the caliper pistons in by hand as far as they will go.
- Install the brake pads.
- Install the pad pin and clip. The clip must be "outside" of the pads.
- Install the caliper (see Caliper Installation).

⚠WARNING

Do not attempt to drive the motorcycle until a full brake lever is obtained by pumping the brake lever until the pads are against the disc. The brake will not function on the first application of the lever if this is not done.

Rear Brake Pad Removal

- Unscrew the caliper mounting bolts.
- Detach the caliper from the disc.
- Draw out the clip [A], and take off the pad pin [B].
- Remove the brake pads [C].

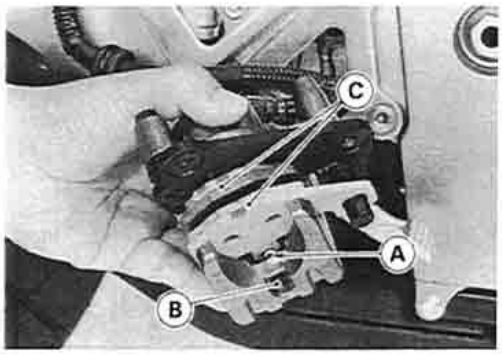

Rear Brake Pad Installation

- Push the caliper piston in by hand as far as it will go.
- Install the anti-rattle spring in place.
- Install the brake pads.
- Install the pad pin and clip. The clip must be "outside" of the pads.
- Install the caliper (see Caliper Installation).

⚠WARNING

Do not attempt to drive the motorcycle until a full brake pedal is obtained by pumping the brake pedal until the pads are against the disc. The brake will not function on the first application of the pedal if this is not done.

Lining Wear

● Check the lining thickness of the pads in each caliper.

★ If the lining thickness of either pad is less than the service limit [A], replace both pads in the caliper as a set.

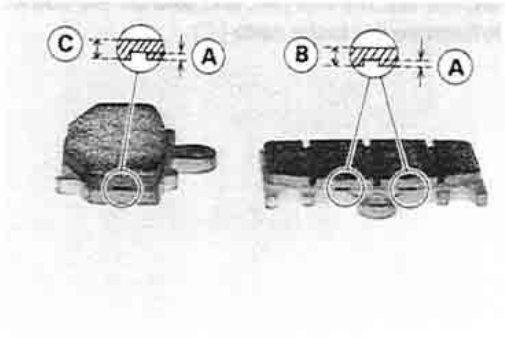

Pad Lining Thickness

Standard:	**Front [B]**	**4 mm**
	Rear [C]	**5 mm**
Service Limit		**1 mm**

Master Cylinder

Front Master Cylinder Removal

- Disconnect the front brake light switch connectors.
- Remove the banjo bolt [A] to disconnect the brake hose from the master cylinder (see Brake Hose Removal/Installation).
- Unscrew the clamp bolts [B], and take off the master cylinder [C] as an assembly with the reservoir, brake lever, and brake switch installed.

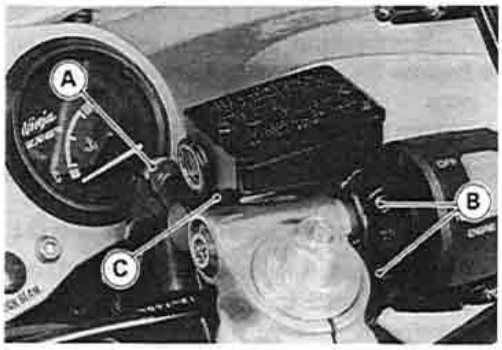

Front Master Cylinder Installation

- Install the front master cylinder so that the mating surface [A] of the switch housing is aligned with the mating surface [B] of the master cylinder clamp to level the reservoir.
- The master cylinder clamp must be installed with the arrow mark [C] upward.
- Tighten the upper clamp bolt [D] first, and then the lower clamp bolt [E]. There will be a gap at the lower part of the clamp after tightening.

Torque – Front Master Cylinder Clamp Bolts: 11 N-m (1.1 kg-m, 95 in-lb)

- Replace the washers that are on each side of the hose fitting with new ones.
- Tighten the brake hose banjo bolt.

Torque – Brake Hose Banjo Bolt: 25 N-m (2.5 kg-m, 18.0 ft-lb)

- Bleed the brake line (see Bleeding the Brake Line).
- Check the brake for good braking power, no brake drag, and no fluid leakage.

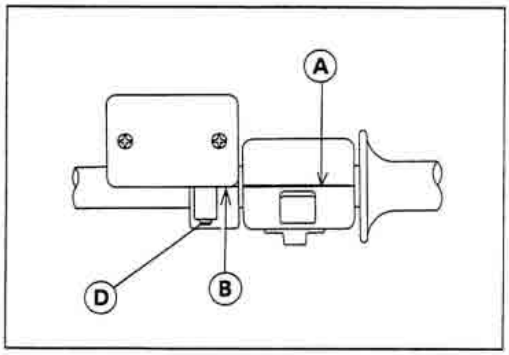

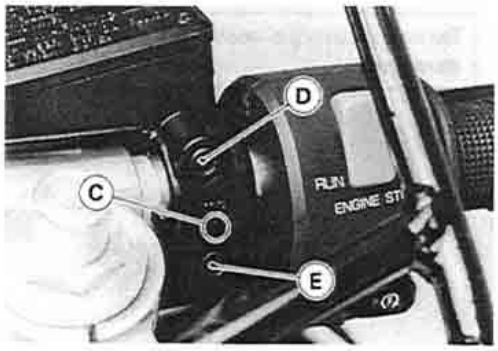

Rear Master Cylinder Removal

- Unscrew the brake hose banjo bolt [A] on the master cylinder (see Brake Hose Removal/Installation).
- Loosen the master cylinder mounting bolt [B] lightly.
- Remove the footpeg bracket mounting bolts [C].

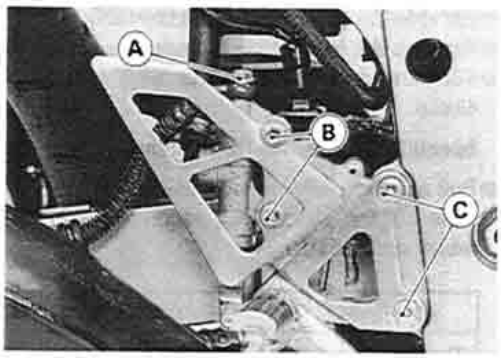

- Pull off the reservoir hose lower end [A], and drain the brake fluid into a container.
- Remove the cotter pin [B].
- Pull off the joint pin [C].

NOTE

○ *Pull off the joint pin while pressing down the brake pedal.*

- Unscrew the master cylinder mounting bolts [D], and take off the master cylinder [E].

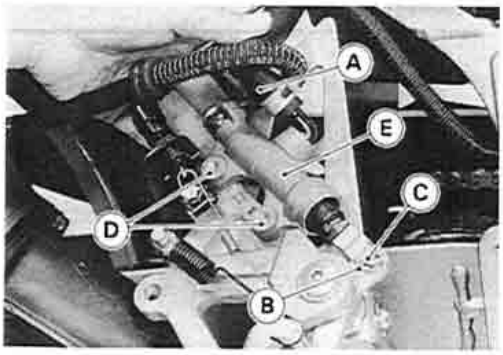

Rear Master Cylinder Installation

- Replace the cotter pin with a new one.
- Replace the washers that are on each side of hose fitting with new ones.
- Tighten the following bolts.

Torque – Rear Master Cylinder Mounting Bolts: 23 N-m (2.3 kg-m, 16.5 ft-lb)
Brake Hose Banjo Bolt: 25 N-m (2.5 kg-m, 18.0 ft-lb)

- Bleed the brake line (see Bleeding the Brake Line).
- Check the brake for good braking power, no brake drag, and no fluid leakage.

Front Master Cylinder Disassembly

- Remove the front master cylinder (see Front Master Cylinder Removal).
- Remove the reservoir cap and diaphragm, and pour the brake fluid into a container.
- Unscrew the locknut and pivot bolt, and remove the brake lever.
- Push the dust cover out of place, and remove the circlip.

Special Tool – Inside Circlip Pliers: 57001-143

- Pull out the piston [A], secondary cup [B], primary cup [C], and return spring [D].

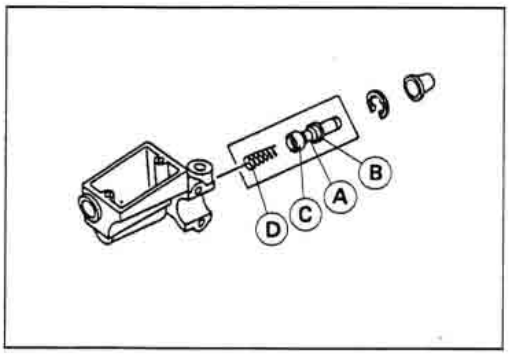

CAUTION
Do not remove the secondary cup from the piston since removal will damage it.

Rear Master Cylinder Disassembly

- Remove the rear master cylinder (see Rear Master Cylinder Removal).
- Slide the dust cover on the push rod out of place, and remove the circlip.

Special Tool – Inside Circlip Pliers: 57001-143

- Pull out the push rod with the piston stop.
- Take off the piston [A], secondary cup [B], primary cup [C], and return spring [D].

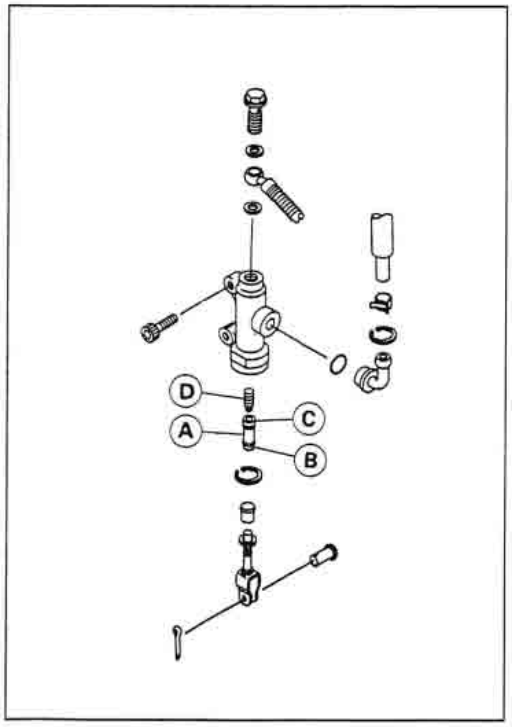

CAUTION
Do not remove the secondary cup from the piston since removal will damage it.

Master Cylinder Assembly

- Before assembly, clean all parts including the master cylinder with brake fluid or alcohol.

CAUTION
Except for the disc pads and disc, use only disc brake fluid, isopropyl alcohol, or ethyl alcohol for cleaning brake parts. Do not use any other fluid for cleaning these parts, Gasoline, engine oil, or any other petroleum distillate will cause deterioration of the rubber parts. Oil spilled on any part will be difficult to wash off completely, and will eventually deteriorate the rubber used in the disc brake.

- Apply brake fluid to the removed parts and to the inner wall of the cylinder.
- Take care not to scratch the piston or the inner wall of the cylinder.
- Tighten the brake lever pivot bolt and the locknut.

Torque – Brake Lever Pivot Bolt: 1.0 N-m (0.10 kg-m, 9 in-lb)
Brake Lever Pivot Bolt Locknut: 5.9 N-m (0.60 kg-m, 52 in-lb)

Master Cylinder Inspection (Visual Inspection)

- Disassemble the front and rear master cylinders.
- Check that there are no scratches, rust or pitting on the inner wall of each master cylinder [A] and on the outside of each piston [B].

★If a master cylinder or piston shows any damage, replace them.

- Inspect the primary [C] and secondary [D] cups.

★If a cup is worn, damaged softened (rotted), or swollen, the piston assembly should be replaced to renew the cups.

★If fluid leakage is noted at the brake lever, the piston assembly should be replaced to renew the cups.

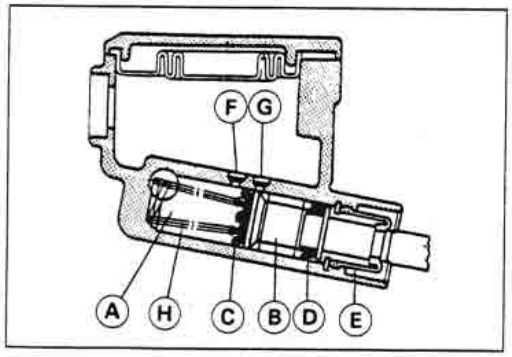

- Check the dust covers [E] for damage.

★If they are damaged, replace them.

- Check that relief [F] and supply [G] ports are not plugged.

★If the relief port becomes plugged, the brake pads will drag on the disc. Blow the ports clean with compressed air.

- Check the piston return springs [H] for any damage.

★If the springs are damaged, replace them.

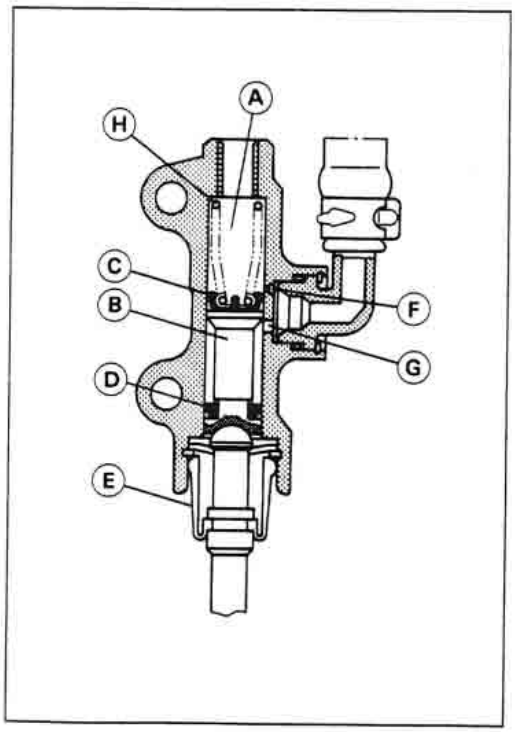

Brake Disc

Brake Disc Removal

- Remove the wheel (see Wheels/Tires chapter).
- Unscrew the mounting bolts [A], and take off the disc [B].

Brake Disc Installation

- Install the brake disc on the wheel so that the marked side faces out.
- Apply a non-permanent locking agent to the threads of the rear brake disc mounting bolts.
- Tighten the mounting bolts.

Torque – Brake Disc Mounting bolts: 23 N-m (2.3 kg-m, 16.5 ft-lb)

Brake Disc Wear

- Measure the thickness of each disc at the point where it has worn the most.

★Replace the disc [A] if it has worn past the service limit.
[B] Measuring Area

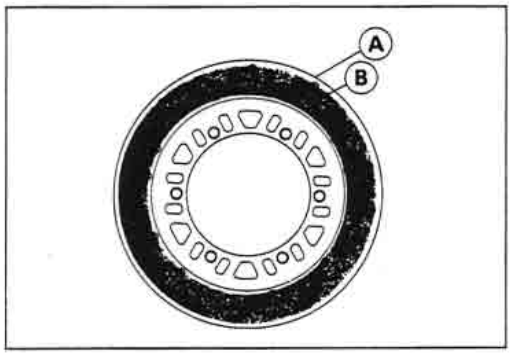

Front Disc Thickness

Standard:	**3.8 ~ 4.2 mm**
Service Limit:	**3.5 mm**

Rear Disc Thickness

Standard:	**5.8 ~ 6.2 mm**
Service Limit:	**5.5 mm**

Brake Disc Warp

- Jack up the motorcycle so that the wheel is off the ground.

Special Tool – Jack: 57001-1238

- For front disc inspection, turn the handlebar fully to one side.
- Set up a dial gauge against the disc [A] as shown and measure disc runout.

[B] Turn the wheel by hand.

★If runout exceeds the service limit, replace the disc.

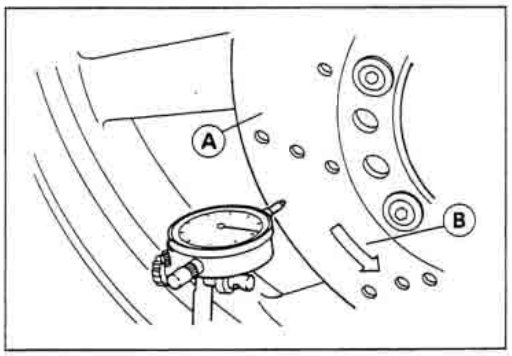

Disc Runout

Standard:	**0.2 mm or less**
Service Limit:	**0.3 mm**

Brake Fluid

Level Inspection

●Check that the brake fluid level in the front brake reservoir [A] is above the lower level line [B].

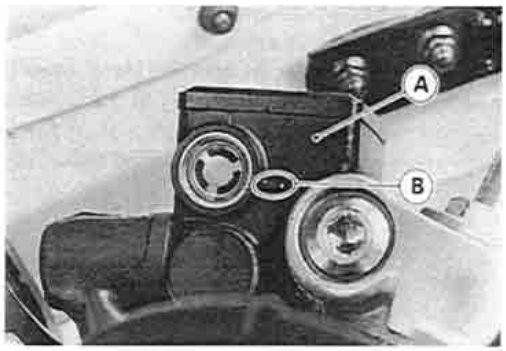

NOTE

○*Hold the reservoir horizontal by turning the handlebar when checking brake fluid level.*

★If the fluid level is lower than the lower level line, fill the reservoir to the upper level line [A] in the reservoir [B].

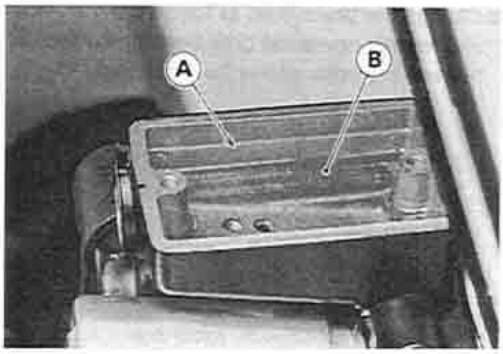

●Check that the brake fluid level in the rear brake reservoir [A] is between the upper [B] and the lower [C] level lines.

★If the fluid level is lower than the lower level line, remove the seats and fill the reservoir to the upper level line.

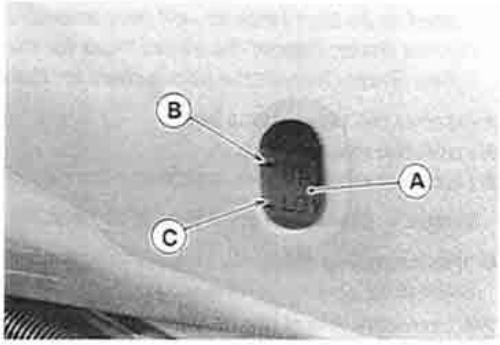

⚠WARNING

Change the brake fluid in the brake line completely if the brake fluid must be refilled but the type and brand of the brake fluid that is already in the reservoir are unidentified. After changing the fluid, use only the same type and brand of fluid thereafter.

Recommended Disc Brake Fluid

Grade: D.O.T.4

Brand: Castrol Girling-Universal
Castrol GT (LMA)
Castrol Disc Brake Fluid
Check Shock Premium Heavy Duty

Brake Fluid Change

NOTE

○*The procedure to change the front brake fluid is as follows. Changing the rear brake fluid is the same as for the front brake.*

- Level the brake fluid reservoir.
- Remove the reservoir cap.
- Remove the rubber cap from the bleed valve [A] on the caliper.
- Attach a clear plastic hose [B] to the bleed valve, and run the other end of the hose into a container.
- Fill the reservoir with fresh specified brake fluid.

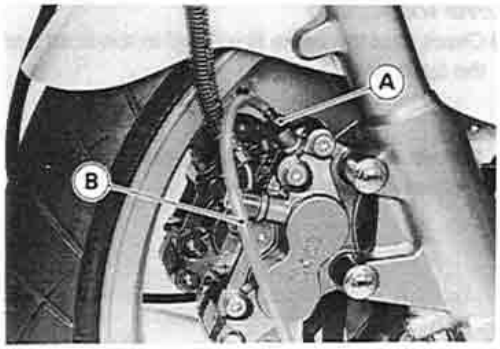

- Change the brake fluid as follows:

○ Repeat this operation until fresh brake fluid comes out from the plastic hose or the color of the fluid changes.

1. Open the bleed valve [A].
2. Apply the brake and hold it [B].
3. Close the bleed valve [C].
4. Release the brake [D].

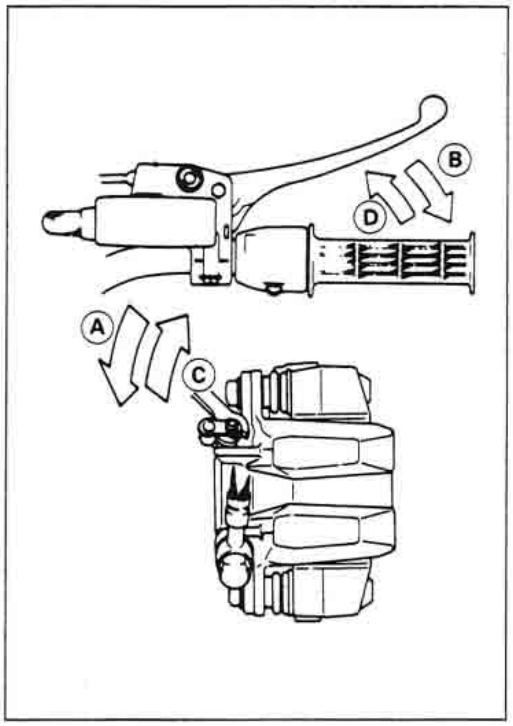

NOTE

○ *The fluid level must be checked often during the changing operation and replenished with fresh brake fluid. If the fluid in the reservoir runs out any time during the changing operation, the brakes will need to be bled since air will have entered the brake line.*

○ *Front Brake: Repeat the above steps for the other caliper.*

○ *Rear Brake: Repeat the above steps for the other bleed valve.*

- Remove the clear plastic hose.
- Install the reservoir cap.
- Tighten the bleed valve, and install the rubber cap.

Torque – Bleed Valve: 7.8 N-m (0.80 kg-m, 69 in-lb)

- After changing the fluid, check the brake for good braking power, no brake drag, and no fluid leakage.

★ If necessary, bleed the air from the lines.

Bleeding the Brake Line

The brake fluid has a very low compression coefficient so that almost all the movement of the brake lever or pedal is transmitted directly to the caliper for braking action. Air, however, is easily compressed. When air enters the brake lines, brake lever or pedal movement will be partially used in compressing the air. This will make the lever or pedal feel spongy, and there will be a loss in braking power.

⚠WARNING

Be sure to bleed the air from the brake line whenever brake lever or pedal action feels soft or spongy after the brake fluid is changed, or whenever a brake line fitting has been loosened for any reason.

NOTE

○ *The procedure to bleed the front brake line is as follows. Bleeding the rear brake line is the same as for the front brake.*

- Remove the reservoir cap, and fill the reservoir with fresh brake fluid to the upper level line in the reservoir.
- With the reservoir cap off, slowly pump the brake lever several times until no air bubbles can be seen rising up through the fluid from the holes at the bottom of the reservoir.

○ Bleed the air completely from the master cylinder by this operation.

- Install the reservoir cap.
- Remove the rubber cap from the bleed valve on the caliper.
- Attach a clear plastic hose to the bleed valve, and run the other end of the hose into a container.
- Bleed the brake line and the caliper as follows:

○ Repeat this operation until no more air can be seen coming out into the plastic hose.

1. Pump the brake lever until it becomes hard, and apply the brake and hold it [A].
2. Quickly open and close[B] the bleed valve while holding the brake applied.
3. Release the brake [C].

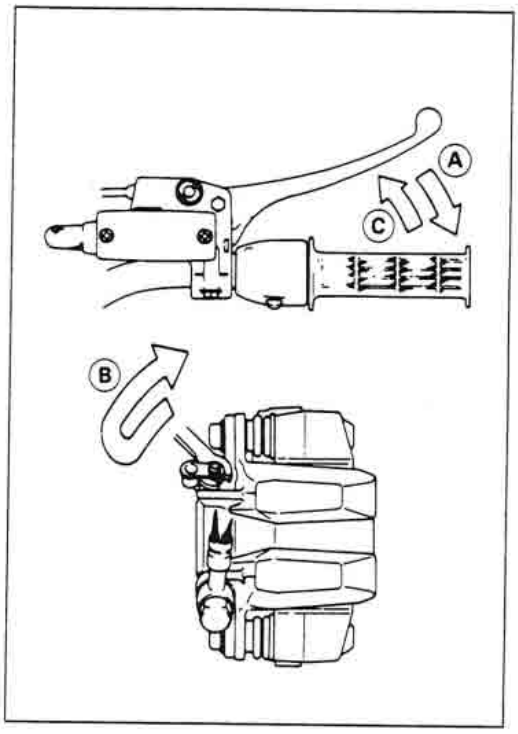

NOTE

○ *The fluid level must be checked often during the bleeding operation and replenished with fresh brake fluid as necessary. If the fluid in the reservoir runs completely out any time during bleeding, the bleeding operation must be done over again from the beginning since air will have entered the line.*

○ *Tap the brake hose lightly from the caliper to the reservoir for more complete bleeding.*

○ *Front Brake: Repeat the above steps for the other caliper.*

○ *Rear Brake: Repeat the above steps for the other bleed valve.*

- Remove the clear plastic hose.
- Tighten the bleed valve, and install the rubber cap.

Torque – Bleed Valve: 7.8 N-m (0.80 kg-m, 69 in-lb)

- Check the fluid level.
- After bleeding is done, check the brake for good braking power, no brake drag, and no fluid leakage.

⚠WARNING

When working with the disc brake, observe the precautions listed below.

1. Never reuse old brake fluid.
2. Do not use fluid from a container that has been left unsealed or that has been open for a long time.
3. Do not mix two types and brands of fluid for use in the brake. This lowers the brake fluid boiling point and could cause the brake to be ineffective. It may also cause the rubber brake parts to deteriorate.
4. Don't leave the reservoir cap off for any length of time to avoid moisture contamination of the fluid.
5. Don't change the fluid in the rain or when a strong wind is blowing.
6. Except for the disc pads and disc, use only disc brake fluid, isopropyl alcohol, or ethyl alcohol for cleaning brake parts. Do not use any other fluid for cleaning these parts. Gasoline, engine oil, or any other petroleum distillate will cause deterioration of the rubber parts. Oil spilled on any part will be difficult to wash off completely and will eventually deteriorate the rubber used in the disc brake.
7. When handling the disc pads or disc, be careful that no disc brake fluid or any oil gets on them. Clean off any fluid or oil that inadvertently gets on the pads or disc with a high-flash point solvent. Do not use one which will leave an oily residue. Replace the pads with new ones if they cannot be cleaned satisfactorily.
8. Brake fluid quickly ruins painted surfaces; any spilled fluid should be completely wiped up immediately.
9. If any of the brake line fittings or the bleed valve is opened at any time, the **AIR MUST BE BLED FROM THE BRAKE LINE.**

Brake Hose

Brake Hose Removal/Installation

CAUTION
Brake fluid quickly ruins painted or plastic surfaces; any spilled fluid should be completely wiped up immediately with wet cloth.

- When removing the brake hose, take care not to spill the brake fluid on the painted or plastic parts.
- When removing the brake hose, temporarily secure the end of the brake hose to some high place to keep fluid loss to a minimum.
- There are washers on each side of the brake hose fitting. Replace them with new ones when installing.
- When installing the hoses, avoid sharp bending, kinking, flattening or twisting, and route the hoses according to Hose Routing section in General Information chapter.
- Tighten the banjo bolts at the hose fittings.

  Torque – Brake Hose Banjo Bolts: 25 N-m (2.5 kg-m, 18.0 ft-lb)

- Bleed the brake line after installing the brake hose (see Bleeding the Brake Line).

Brake Hose Inspection

- The high pressure inside the brake line can cause fluid to leak or the hose to burst if the line is not properly maintained. Bend and twist the rubber hose while examining it.

★Replace it if any cracks or bulges are noticed.

Suspension

Table of Contents

Exploded View

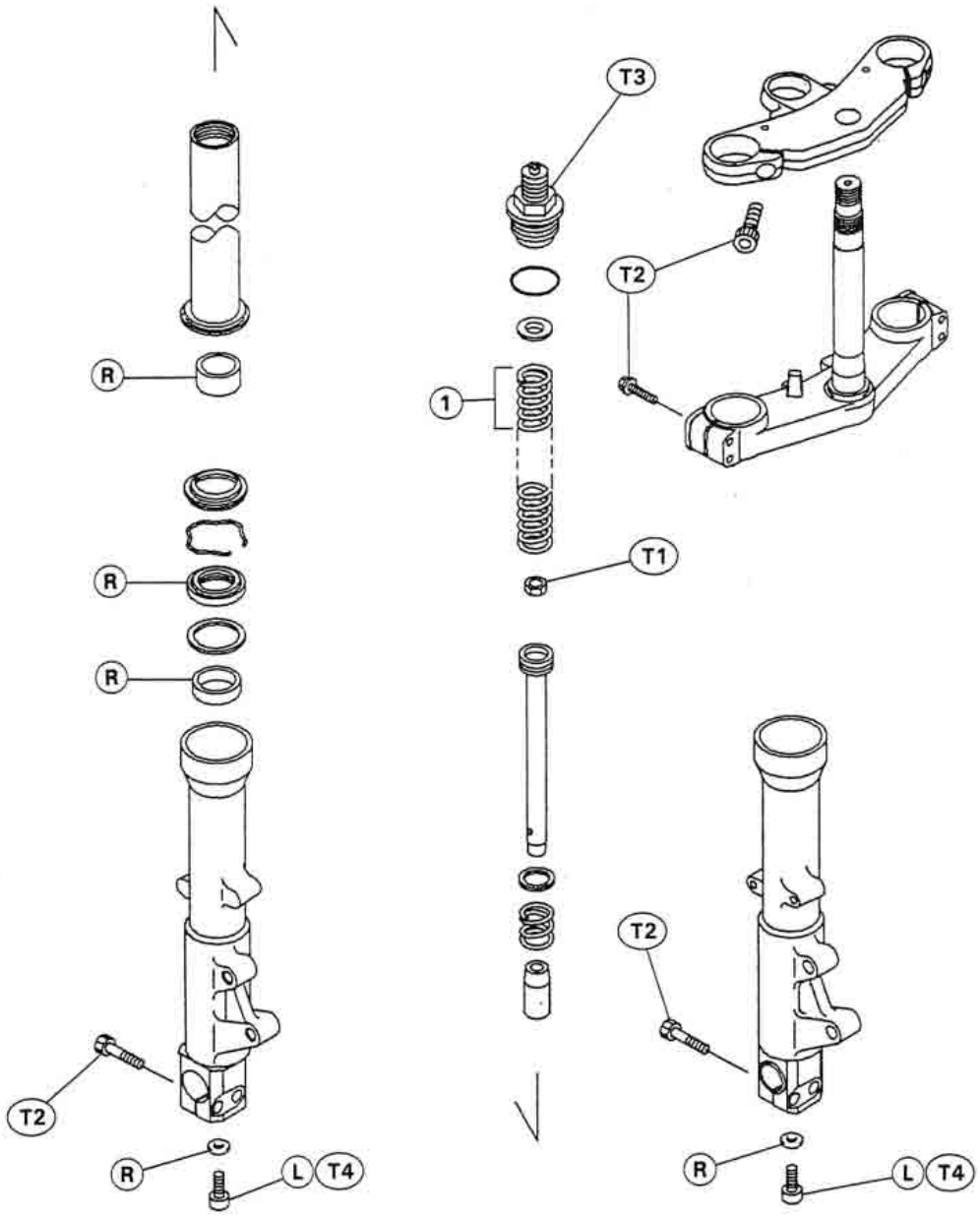

1. Fork Spring: Smaller end faces up.

L: Apply a non-permanent locking agent.
R: Replacement Parts

T1: 15 N-m (1.5 kg-m, 11.0 ft-lb)
T2: 20 N-m (2.0 kg-m, 14.5 ft-lb)
T3: 23 N-m (2.3 kg-m, 16.5 ft-lb)
T4: 39 N-m (4.0 kg-m, 29 ft-lb)

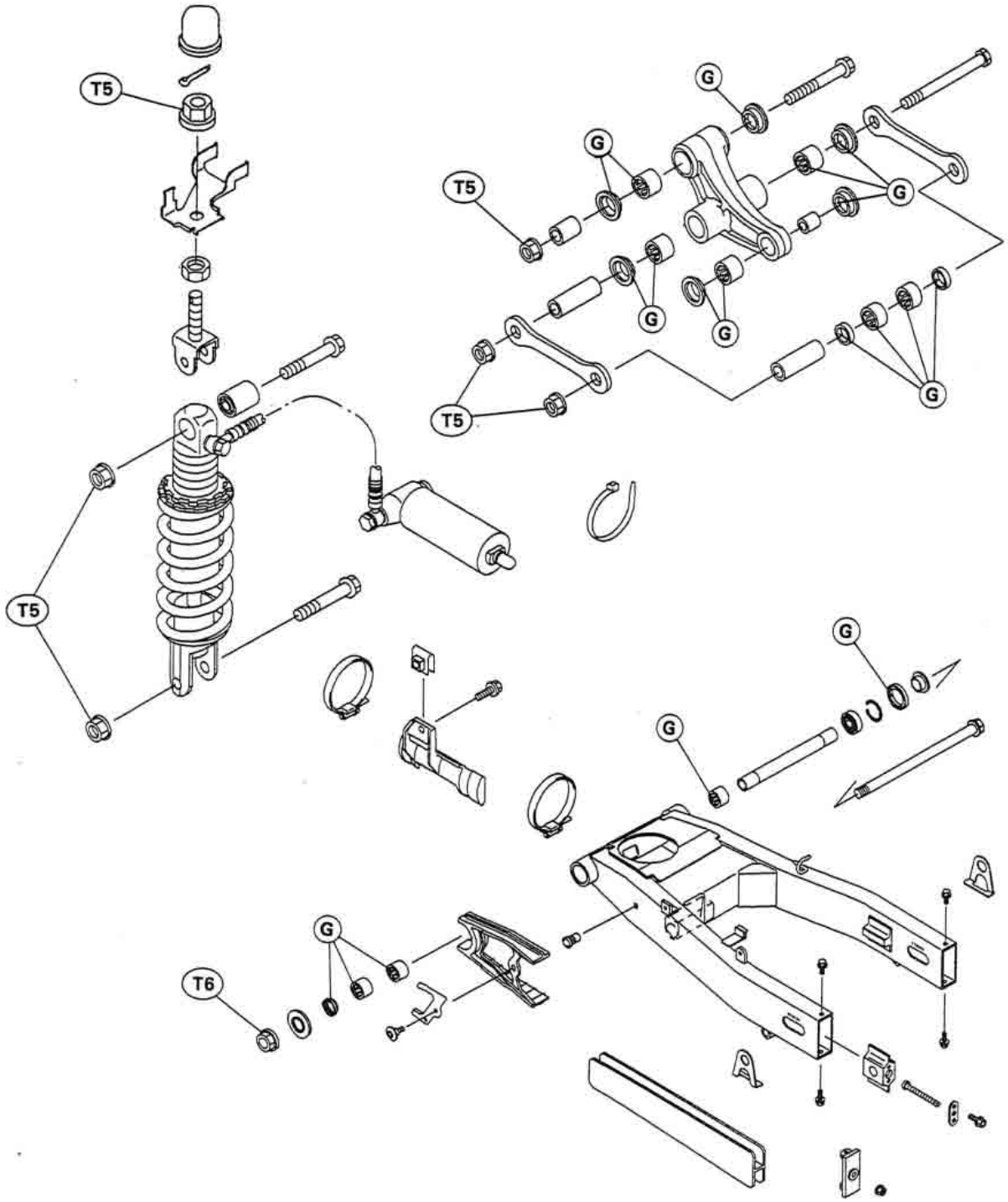

G: Apply grease.

T5: 59 N-m (6.0 kg-m, 43 ft-lb)
T6: 110 N-m (11.0 kg-m, 80 ft-lb)

Specifications

Item	Standard
Front Fork (per one unit):	
Fork inner tube diameter	Φ 41 mm
Air Pressure	Atmospheric pressure (Non-adjustable)
Rebound damper setting	7th click from the first click of the fully clockwise position (Usable Range: 1 ←→ 12 ~ 13 clicks)
Compression damper setting	7th click from the first click of the fully clockwise position (Usable Range: 1 ←→ 11 ~ 12 clicks)
Fork spring preload setting	Adjuster protrusion is 15 mm (6 Marks) (Usable Range: 5 ~ 20 mm)
Fork oil viscosity	KAYABA G10 (SAE10W)
Fork oil capacity	381 ± 4 mL (completely dry) approx. 325 mL (when changing oil)
Fork oil level	Fully compressed, without fork spring, below from inner tube top 150 ± 2 mm
Fork spring free length	389.9 mm (Service limit 382 mm)
Rear Shock Absorber:	
Rebound damper set	No. 2 of 4 positions
Compression damper set	12th click from the first click of the fully clockwise position (Usable Range: 1 ←→ 16 ~ 22 clicks)
Spring setting position	
Standard	Spring free length minus 14.5 mm (FR,IT) Spring free length minus 10 mm
Usable range	Spring free length minus 12.5 mm to 22.5 mm (FR,IT) Spring free length minus 8 mm to 18mm (weaker to stronger)
Gas pressure	980 kPa (10 kg/cm², 142 psi, Non-adjustable)

(FR): French Model (IT): Italian Model

Special Tools – **Fork Piston Rod Puller, M10 x 1.0: 57001-1298**
Fork Oil Level Gauge: 57001-1290
Fork Outer Tube Weight: 57001-1218
Fork Cylinder Holder: 57001-1297
Front Fork Oil Seal Driver: 57001-1219
Steering Stem Nut Wrenches: 57001-1100 (2)
Oil Seal & Bearing Remover: 57001-1058
Bearing Driver Set: 57001-1129
Inside Circlip Pliers: 57001-143
Jack: 57001-1238

Front Fork

Rebound Damping Force Adjustment

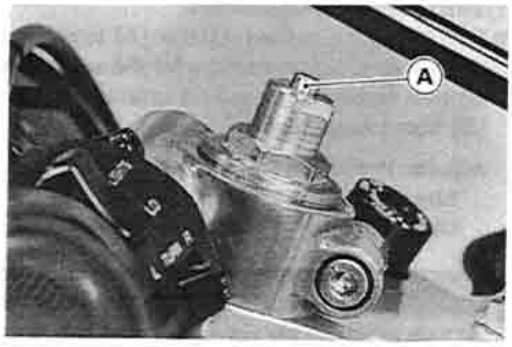

- To adjust the rebound damping force, turn the rebound damping adjuster [A] until you feel a click.
- The standard adjuster setting for the average-build rider of 68 kg (150 lb) with no passenger and no accessories is the **7th click** from the 1st click of the fully clockwise position.

⚠WARNING

If both adjusters are not adjusted equally, handling may be impaired and a hazardous condition may result.

- The damping force can be left soft for average riding. But it should be adjusted harder for high speed riding or riding with a passenger. If the damping feels too soft or too stiff, adjust it in accordance with the following table.

Rebound Damping Force Adjustment

Adjuster Position	Damping Force	Setting	Load	Road	Speed
12 ~ 13	Weak	Soft	Light	Good	Low
↑	↑	↑	↑	↑	↑
↓	↓	↓	↓	↓	↓
1	Strong	Hard	Heavy	Bad	High

Compression Damping Force Adjustment

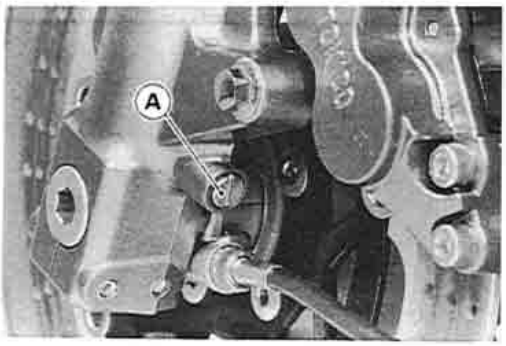

- To adjust the compression damping force, turn the compression damping adjuster [A] until you feel a click.
- The standard adjuster setting for the average-build rider of 68 kg (150 lb) with no passenger and no accessories is the **7th click** from the 1st click of the fully clockwise position.

⚠WARNING

If both adjusters are not adjusted equally, handling may be impaired and a hazardous condition may result.

- The damping force can be left soft for average riding. But it should be adjusted harder for high speed riding or riding with a passenger. If the damping feels too soft or too stiff, adjust it in accordance with the following table.

Compression Damping Force Adjustment

Adjuster Position	Damping Force	Setting	Load	Road	Speed
11 ~ 12	Weak	Soft	Light	Good	Low
↑	↑	↑	↑	↑	↑
↓	↓	↓	↓	↓	↓
1	Strong	Hard	Heavy	Bad	High

Spring Preload Adjustment

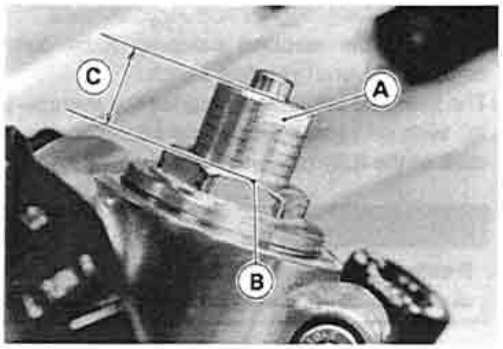

- Turn the spring preload adjuster [A] to change spring preload setting.

○ The standard adjuster setting for the average-build rider of 68 kg (150 lb) with no passenger and no accessories is the 6th mark [B] (15mm) [C] from top as shown.

Adjuster Protrusion (from top)

Standard:	**6th Mark (15 mm)**
Usable Range	**1 ~ 8th Mark (5 ~ 20 mm)**

⚠WARNING

If both adjusters are not adjusted equally, handling may be impaired and a hazardous condition may result.

○ The spring preload can be left soft for average riding. But it should be adjusted harder for high speed riding or riding with a passenger. If the spring action feels too soft or too stiff, adjust it in accordance with the following table.

Spring Action

Adjuster Position	Dumping Force	Setting	Load	Road	Speed
8(20mm)	Weak	Soft	Light	Good	Low
↑	↑	↑	↑	↑	↑
↓	↓	↓	↓	↓	↓
1(5mm)	Strong	Hard	Heavy	Bad	High

Front Fork Removal (each fork leg)

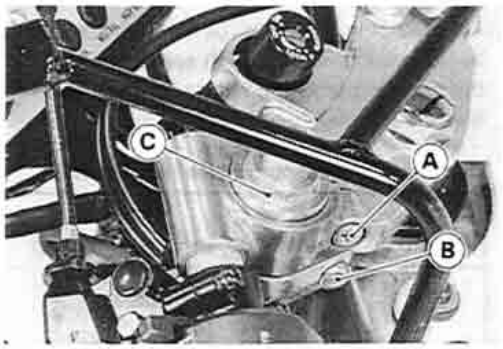

- Remove:
  - Upper and Lower Fairings (see Frame chapter)
  - Front Wheel (see Wheels/Tires chapter)
  - Front Fender (see Frame chapter)

★ Loosen the handlebar holder bolt [A], upper fork clamp bolt [B] and fork top plug [C] beforehand if the fork leg is to be disassembled.

NOTE

○ *Loosen the top plug after loosening the handlebar holder bolt and upper fork clamp bolt.*

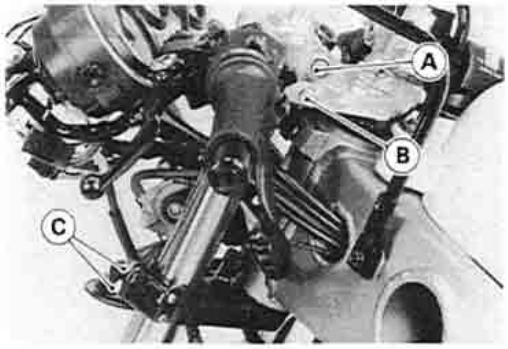

- Loosen the handlebar holder bolt [A], upper fork clamp bolt [B] and lower fork clamp bolts [C].
- With a twisting motion, work the fork leg down and out.

Front Fork Installation

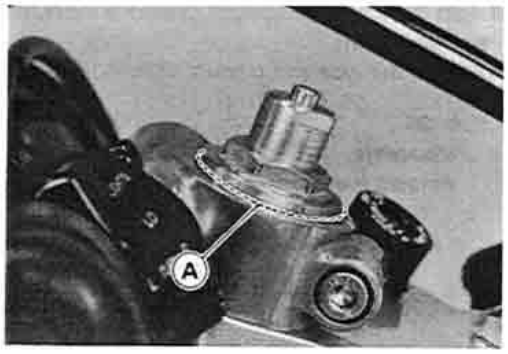

- Install the fork so that the top end [A] of the inner tube is flush with the upper surface of the handlebar holder.
- Tighten the lower fork clamp bolt and fork top bolt.

Torque – Front Fork Clamp Bolt (Lower): 20 N-m (2.0 kg-m, 14.5 ft-lb)
Front Fork Top Plug: 23 N-m (2.3 kg-m, 16.5 ft-lb)

- Tighten the handlebar holder bolt and upper fork clamp bolt.

Torque – Handlebar Holder Bolt: 23 N-m (2.3 kg-m, 16.5 ft-lb)
Front Fork Clamp Bolt (Upper): 20 N-m (2.0 kg-m, 14.5 ft-lb)

NOTE

○ *Tighten the top plug before tightening the handlebar holder bolt and upper fork clamp bolt.*

- Install the removed parts (see appropriate chapters).
- Adjust the spring preload and the damping force.

Fork Oil Change

- Remove the front fork (see Front Fork Removal).
- Unscrew the top plug out of the inner tube.
- Holding the piston rod nut [A] with a wrench [B], remove the fork top plug from the piston rod.

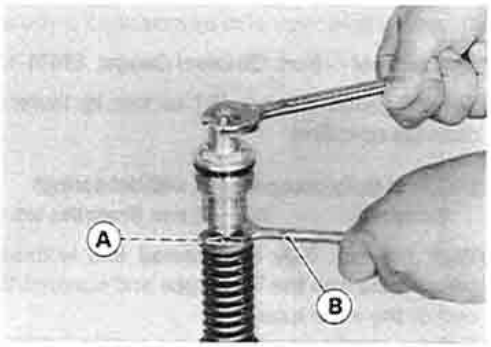

- Remove:
  Rebound Damping Adjuster Rod [A]
  Spring Seat [B]
  Fork Spring [C]

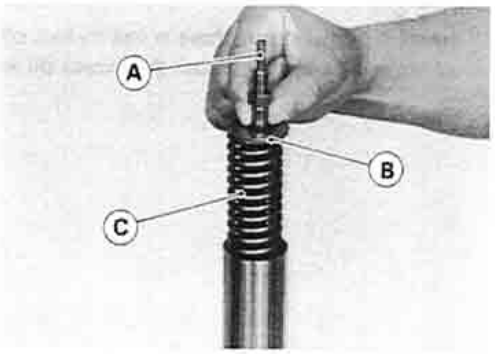

- Drain the fork oil into a suitable container.

○ Pump the piston rod [A] up and down at least ten times to expel the oil from the fork.

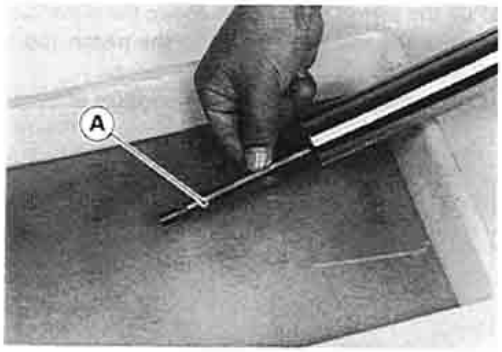

- Hold the fork tube upright, press the inner tube and the piston rod all the way down.
- Pour in the type and amount of fork oil specified.

Fork Oil
Viscosity: **SAE 10W**
Amount (per side)
When changing oil: **approx. 325 mL**
After disassembly and completely dry: **381 ± 4 mL**

★If necessary, measure the oil level as follows.
○Hold the outer tube vertically in a vise.
○Pump the inner tube several times to expel air bubbles.
○Using the piston rod puller [A], move the piston rod up and down more than ten times in order to expel all the air from the fork oil.

Special Tool – Fork Piston Rod Puller, M10 x 1.0: 57001-1298

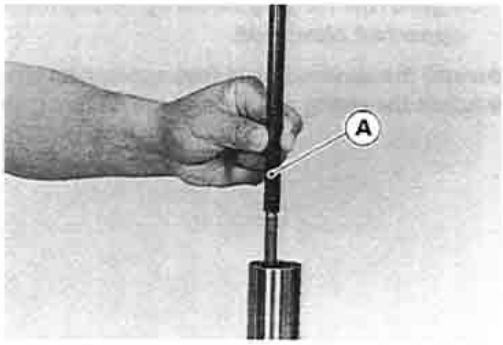

○Wait until the oil level settles.
○With the fork fully compressed and the piston rod fully pushed in, insert a tape measure or rod into the inner tube, and measure the distance from the top of the inner tube to the oil.

NOTE

○*Fork oil level may also be measured using the fork oil level gauge.*

Special Tool – Fork Oil Level Gauge: 57001-1290 [A]

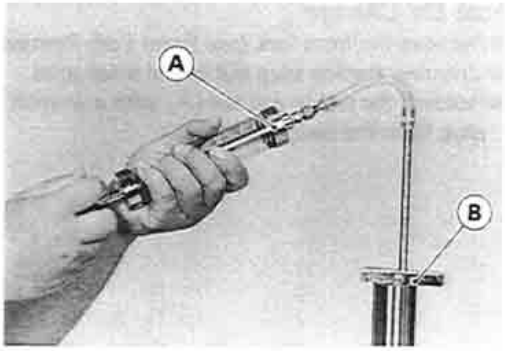

○Set the gauge stopper [B] so that its lower side shows the oil level distance specified.

Oil Level (fully compressed, without spring)
Standard: **150 ± 2 mm (from the top of the inner tube)**

○With the fork fully compressed and without fork spring, insert the gauge tube into the inner tube and position the stopper across the top end of the inner tube.
○Pull the handle slowly to pump out the excess oil until the oil no longer comes out.
★If no oil is pumped out, there is insufficient oil in the inner tube. Pour in enough oil, then pump out the excess oil as shown above.

- Pull the piston rod [A] up above the outer tube top.
- Screw the rod nut [B] on to the piston rod with the chamfered side [C] down.

○Check that the visible thread length is at least 12 mm [D].

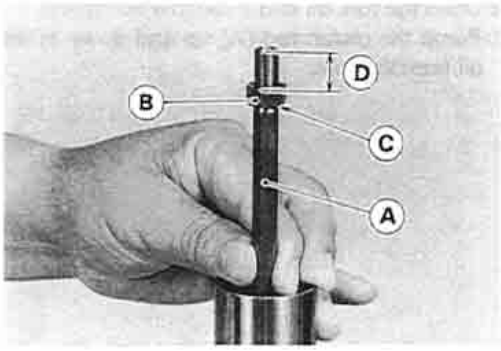

- Insert the rebound damping adjuster rod into the piston rod.
- Screw the fork piston rod puller onto the end of the rod.

Special Tool – Fork Piston Rod Puller, M10 x 1.0: 57001-1298

- Install the fork spring with the smaller end facing upward.
- Install the spring seat.

- Check the O-ring [A] on the top plug and replace it with a new one if damaged.
- Screw in the damper adjuster [B] of the top plug so that the distance between the adjuster bottom and the spring adjuster [C] end is 25 mm [D].

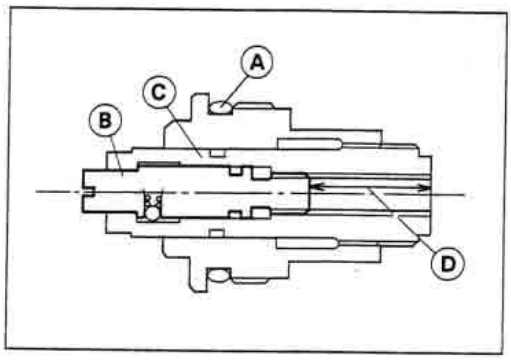

- Remove the fork piston rod puller, and then screw the top plug on to the piston rod.
- Pull the top plug until the piston rod nut shows.

- Holding the top plug [A] with a wrench, tighten the piston rod nut [B] against the top plug.

Torque – Piston Rod Nut: 15 N-m (1.5 kg-m, 11.0 ft-lb)

- Raise the outer tube and screw the top plug into it.
- Install the front fork (see Front Fork Installation).

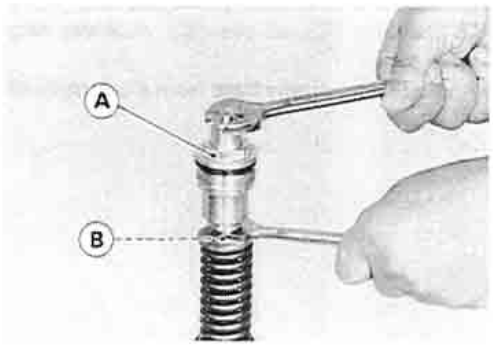

Front Fork Disassembly

- Remove the front fork (see Front Fork Removal).
- Drain the fork oil (see Fork Oil Change).
- Hold the front fork in a vise [A].
- Stop the cylinder [B] from turning by using the fork cylinder holder [C].

Special Tool – Fork Cylinder Holder: 57001-1297

- Unscrew the Allen bolt [D], then take the bolt and gasket out of the bottom of the inner tube.

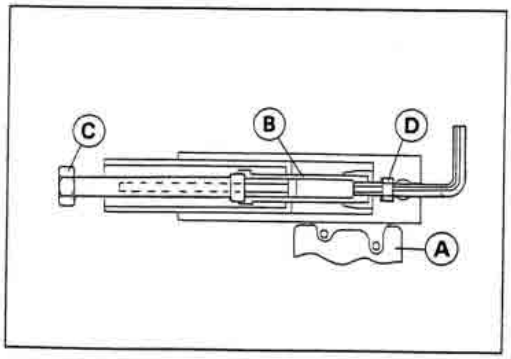

●Take the cylinder unit [A].
○Do not disassemble the cylinder unit.

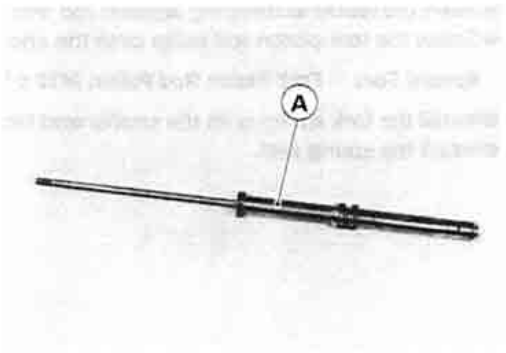

●Separate the inner tube from the outer tube as follows.
○Slide up the dust seal.
○Remove the retaining ring [A] from the outer tube.

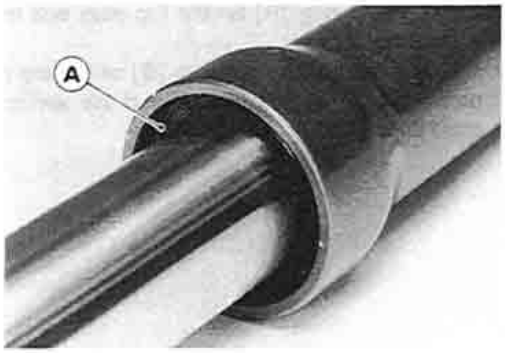

○Grasp the inner tube and stroke the outer tube up and down several times. The shock to the fork seal separates the inner tube from the outer tube.
★If the tubes are tight, use a fork outer tube weight.

Special Tool – Fork Outer Tube Weight: 57001-1218

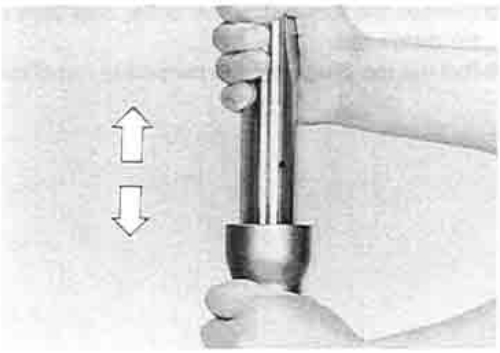

●Remove the inner tube guide bushing [A], outer tube guide bushing [B], washer [C], oil seal [D], retaining ring and dust seal from the inner tube.
●Remove the cylinder base from the bottom of the outer tube.

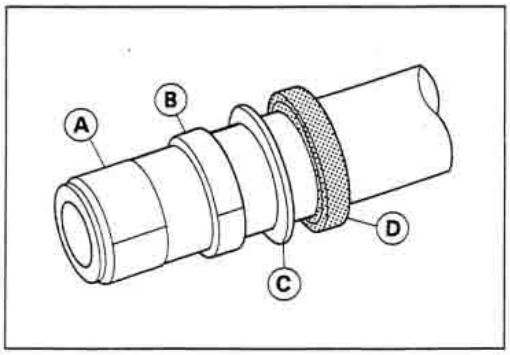

Front Fork Assembly

●Replace the following parts with new one.
Oil Seal
Guide Bushings
●Install the following parts onto the inner tube.
Dust Seal
Retaining Ring
Oil Seal
Washer
Outer Tube Guide Bushing
Inner Tube Guide Bushing

- Insert the cylinder unit [A] into the inner tube [B].
- Install the cylinder base [C] on the cylinder unit.
- Insert the inner tube, cylinder unit, cylinder base as a set into the outer tube [D].
- Replace the bottom Allen bolt gasket with a new one.
- Stop the cylinder from turning by using the fork cylinder holder.

Special Tool – Fork Cylinder Holder: 57001-1297

- Apply a non-permanent locking agent to the Allen bolt and tighten it.

Torque – Front Fork Bottom Allen Bolt: 39 N-m (4.0 kg-m, 29 ft-lb)

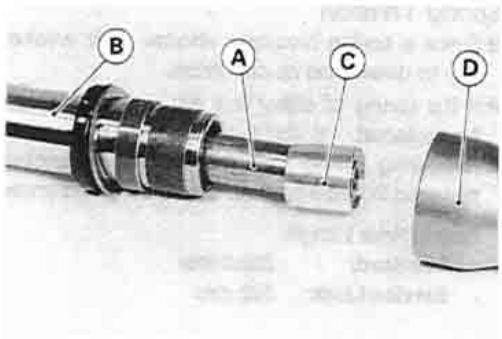

- When assembling the new outer tube guide bushing, hold the washer against the new bushing and tap the washer with the fork oil seal driver [A] until it stops.

Special Tool – Front Fork Oil Seal Driver: 57001-1219

- After installing the washer, install the oil seal by using the fork oil seal driver.
- Install the retaining ring and dust seal by hand.
- Pour in the specified type of oil (see Fork Oil Change).

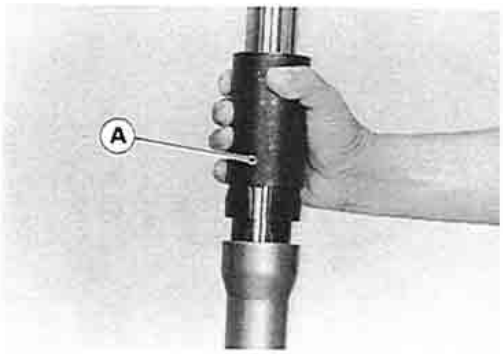

Inner Tube Inspection

- Visually inspect the inner tube, and repair any damage.
- Nicks or rust damage can sometimes be repaired by using a wet-stone to remove sharp edges or raised areas which cause seal damage.

★If the damage is not repairable, replace the inner tube. Since damage to the inner tube damages the oil seal, replace the oil seal whenever the inner tube is repaired or replaced.

- Temporarily assemble the inner and outer tubes, and pump them back and forth manually to check for smooth operation.

CAUTION
If the inner tube is badly bent or creased, replace it. Excessive bending, followed by subsequent straightening, can weaken the inner tube.

Dust Seal Inspection

- Inspect the dust seals [A] for any signs of deterioration or damage.

★Replace it if necessary.

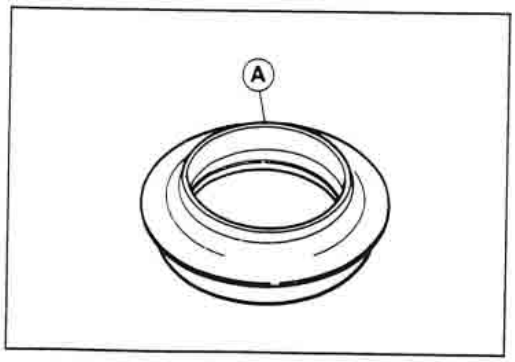

Spring Tension

- Since a spring becomes shorter as it weakens, check its free length [A] to determine its condition.

★If the spring of either fork leg is shorter than the service limit, it must be replaced. If the length of a replacement spring and that of the remaining spring vary greatly, the remaining spring should also be replaced in order to keep the fork legs balanced for motorcycle stability.

Spring Free Length

Standard:	**389.9 mm**
Service Limit:	**382 mm**

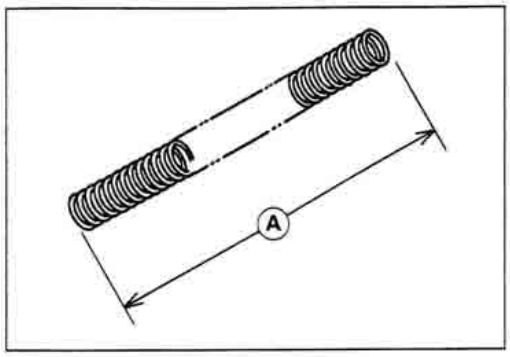

Rear Shock Absorber

Rebound Damping Force Adjustment

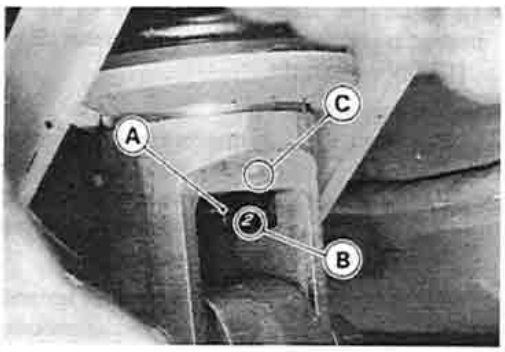

- To adjust the rebound damping force, turn the rebound damping adjuster [A] to the desired number [B] until you feel a click and the number aligns with the mark [C].
- ○ The standard adjuster setting for an average-build rider of 68 kg (150 lb) with no passenger and no accessories is number **2.**
- ★ If the damping feels too soft or too stiff, adjust it.

Rebound Damping Force Adjustment

Adjuster Position	Damping Force	Setting	Load	Road	Speed
1	Weak	Soft	Light	Good	Low
↑	↑	↑	↑	↑	↑
↓	↓	↓	↓	↓	↓
4	Strong	Hard	Heavy	Bad	High

Compression Damping Force Adjustment

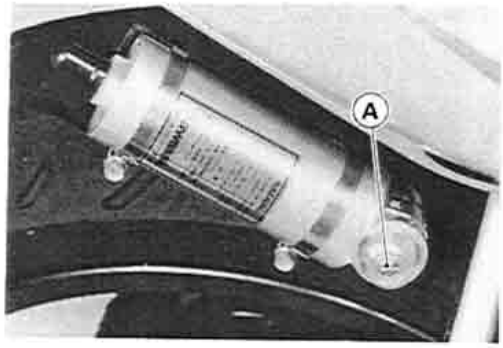

- To adjust the compression damping force, turn the compression damping adjuster [A] on the gas reservoir until you feel a click.
- ○ The standard adjuster setting for the average-build rider of 68 kg (150 lb) with no passenger and no accessories is the **12th click** from the 1st click of the fully clockwise position.
- ○ The damping force can be left soft for average riding. But it should be adjusted harder for high speed riding or riding with a passenger. If the damping feels too soft or too stiff, adjust it in accordance with the following table.

Compression Damping Force Adjustment

Adjuster Position	Damping Force	Setting	Load	Road	Speed
16 ~ 22	Weak	Soft	Light	Good	Low
↑	↑	↑	↑	↑	↑
↓	↓	↓	↓	↓	↓
1	Strong	Hard	Heavy	Bad	High

Spring Preload Adjustment

- Remove the rear shock absorber from the frame (see Rear Shock Absorber Removal).
- Loosen the locknut and turn out the adjusting nut to free the spring.

Special Tool – Steering Stem Nut Wrenches: 57001-1100 (2)

- Measure the spring free length.

●To adjust the spring preload, turn in the adjusting nut [A] to the desired position and tighten the locknut [B].
[C] Spring Length

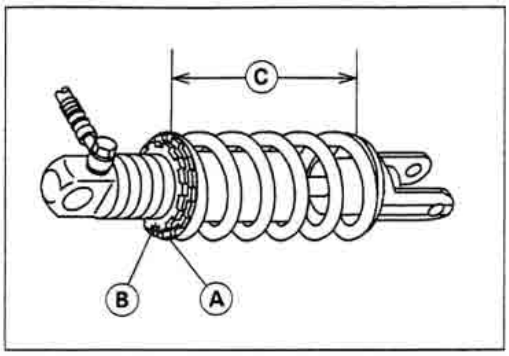

Spring Preload Setting

Standard:	**Spring free length minus 14.5 mm**
	(FR, IT) Spring free length minus 10 mm
Usable Range:	**Spring free length minus 12.5 to 22.5 mm**
	(FR,IT) Spring free length minus 8 to 18 mm
	(weaker to stronger)

○The standard adjusting nut setting for an average-build rider of 68 kg (150 lb) with no passenger and no accessories is compressed 14.5mm than free length.

★If the spring action feels too soft or too stiff, adjust it.

Spring Adjustment

Adjuster Position	Damping Force	Setting	Load	Road	Speed
12.5 mm * 8 mm	Weak	Soft	Light	Good	Low
↑ ↓	↑ ↓	↑ ↓	↑ ↓	↑ ↓	↑ ↓
22.5 mm * 18mm	Strong	Hard	Heavy	Bad	High

*: France, Italy Model

Rear Shock Absorber Removal

●Remove:
Seats, Lower Fairings (see Frame chapter)
Fuel Tank (see Fuel System chapter)

●Using the jack, raise the rear wheel off the ground.

Special Tool – Jack: 57001-1238

●Remove:
Lower Shock Absorber Bolt [A]
Upper Tie-Rod Bolt [B]

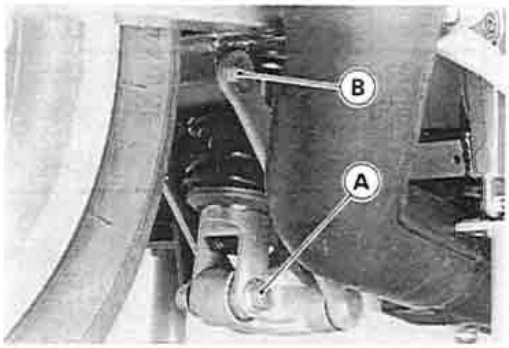

●Loosen the clamp screws [A] and remove the gas reservoir [B] from the bracket [C].

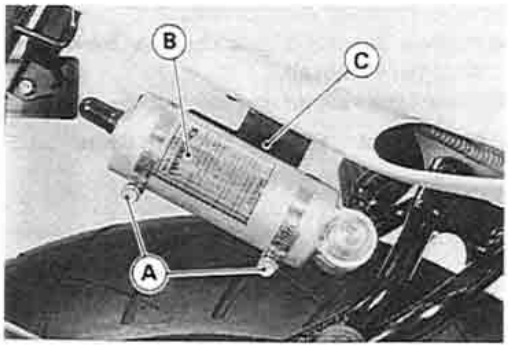

- Remove:
  Footpeg Bracket Bolts [A]
  Upper Shock Absorber Bolt [B]
- Remove the shock absorber with the gas reservoir toward the ground.

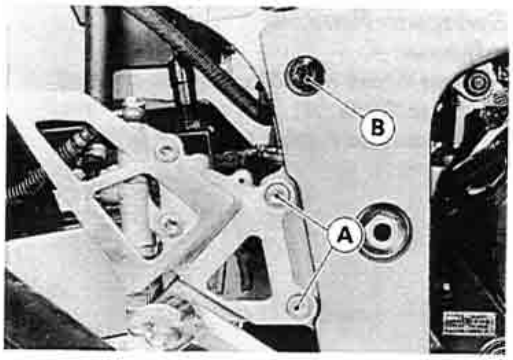

Rear Shock Absorber Installation

- Pack the rocker arm needle bearings with grease.
- Install the rear shock absorber so that the rebound damping adjuster [A] and gas reservoir hose fitting [B] face rearward.
- Install the gas reservoir clamp screws under the reservoir.
- Tighten the following nuts:

Torque – Rear Shock Absorber Nuts: 59 N-m (6.0 kg-m, 43 ft-lb)
Tie-Rod Nuts: 59 N-m (6.0 kg-m, 43 ft-lb)

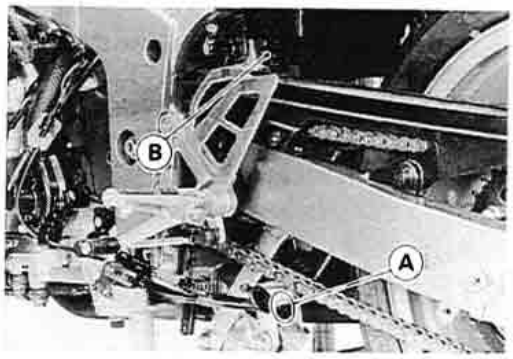

Rear Shock Absorber Scrapping

⚠WARNING

Since the reservoir tank of the rear shock absorber contains nitrogen gas, do not incinerate the reservoir tank without first releasing the gas or it may explode.

- Remove the shock absorber (see Rear Shock Absorber Removal).
- Remove the valve cap [A] and release the nitrogen gas completely from the gas reservoir.
- Remove the valve.

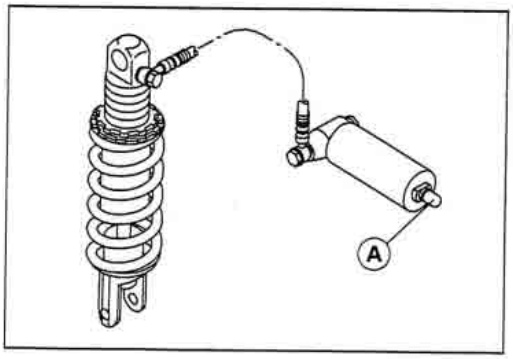

⚠WARNING

Since the high pressure gas is dangerous, do not point the valve toward your face or body.

Swingarm

Swingarm Removal

- Remove:
  - Rear Wheel (see Wheels/Tires chapter)
  - Chain Cover [A]
  - Brake Hose Rubber Clamp [B]

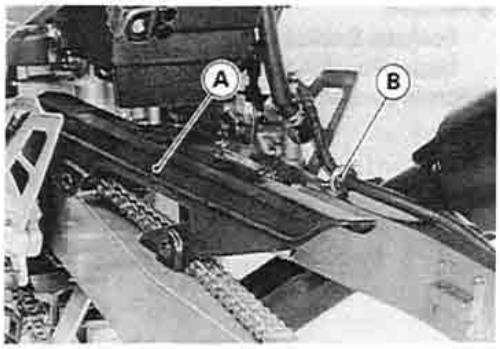

  - Shift Lever [A]
  - Chain Guard [B] (see Final Drive chapter)
  - Lower Shock Absorber Bolt [C]
  - Upper Tie-Rod Bolt [D]

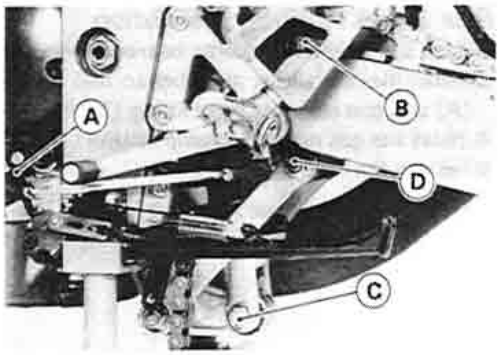

- Loosen the upper shock absorber nut [A].
- Unscrew the swingarm pivot nut [B].
- Pull off the pivot shaft and remove the swingarm.

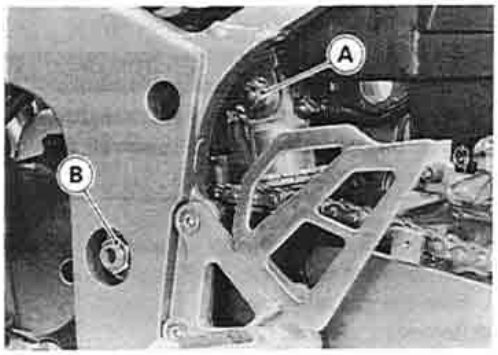

Swingarm Installation

- Apply plenty of grease to the ball bearing, needle bearings and grease seals.
- Install the collar [A] and cap [B].
- Tighten the pivot nut.

Torque – Swingarm Pivot Nut: 110 N-m (11.0 kg-m, 80 ft-lb)

- Install the removed parts (see appropriate chapters).

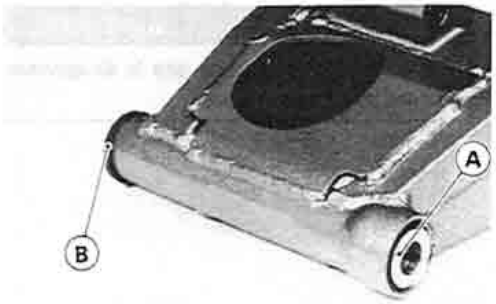

Swingarm Bearing Removal

- Remove:
  - Swingarm
  - Collar and Cap
  - Grease Seals
  - Sleeve
  - Circlip (right side)

Special Tool – Inside Circlip Pliers: 57001-143

- Remove the ball bearing and needle bearings using the oil seal & bearing remover [A].

Special Tool – Oil Seal & Bearing Remover: 57001-1058

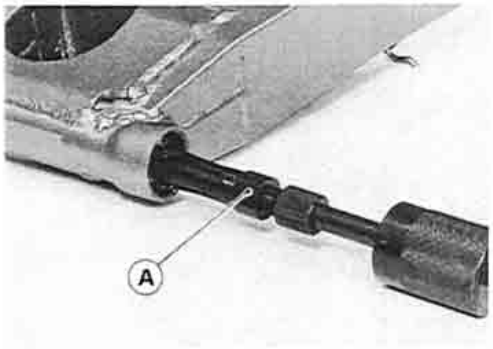

Swingarm Bearing Installation

- Apply plenty of grease to the ball bearing and needle bearings.
- Install the bearings so that the manufacturer's marks face out.

Special Tool – Bearing Driver Set: 57001-1129 [A]

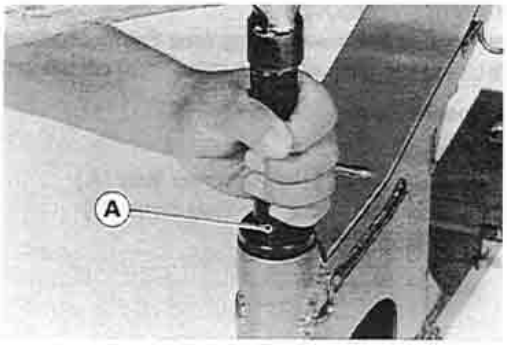

Tie-Rod, Rocker Arm

Tie-Rod Removal

- Remove the lower fairing (see Frame chapter).
- Using the jack, raise the rear wheel off the ground.

Special Tool – Jack: 57001-1238

- Remove:
  Lower Rear Shock Absorber Bolt [A]
  Upper and Lower Tie-Rod Bolts [B]
  Tie-Rod [C]

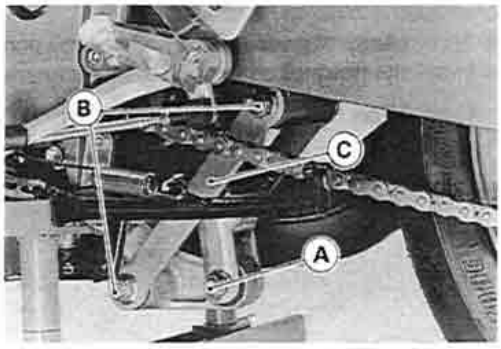

Tie-Rod Installation

- Apply grease to the inside of the needle bearings and oil seals.
- Install the tie-rods so that the chamfered side faces the bolts and nuts.
- Tighten the upper and lower tie-rod bolts.

Torque – Tie-Rod Nuts: 59 N-m (6.0 kg-m, 43 ft-lb)
Rear Shock Absorber Nut: 59 N-m (6.0 kg-m, 43 ft-lb)

Rocker Arm Removal

- Remove:
  Lower Fairings (see Frame chapter)
  Muffler (see Engine Top End chapter)
- Using the jack, raise the rear wheel off the ground.

Special Tool – Jack: 57001-1238

- Remove:
  Lower Rear Shock Absorber Bolt [A]
  Lower Tie-Rod Bolt [B]
  Rocker Arm Bolt [C]
  Rocker Arm [D]

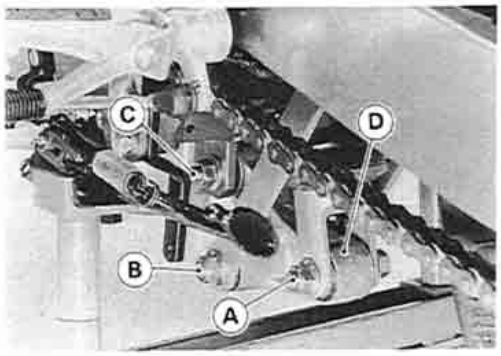

Rocker Arm Installation

- Apply grease to the inside of the needle bearings and oil seals.
- Tighten the rocker arm bolt, tie-rod bolt and shock absorber bolt.

Torque – Rocker Arm Nut: 59 N-m (6.0 kg-m, 43 ft-lb)
Tie-Rod Nut: 59 N-m (6.0 kg-m, 43 ft-lb)
Rear Shock Absorber Nut: 59 N-m (6.0 kg-m, 43 ft-lb)

Needle Bearing Inspection

★If there is any doubt as to the condition of either needle bearing, replace the bearing and sleeve as a set.

Tie-Rod, Rocker Arm Sleeve Inspection

★If there is visible damage, replace the sleeve and needle bearing as a set.

Steering

Table of Contents

Exploded View

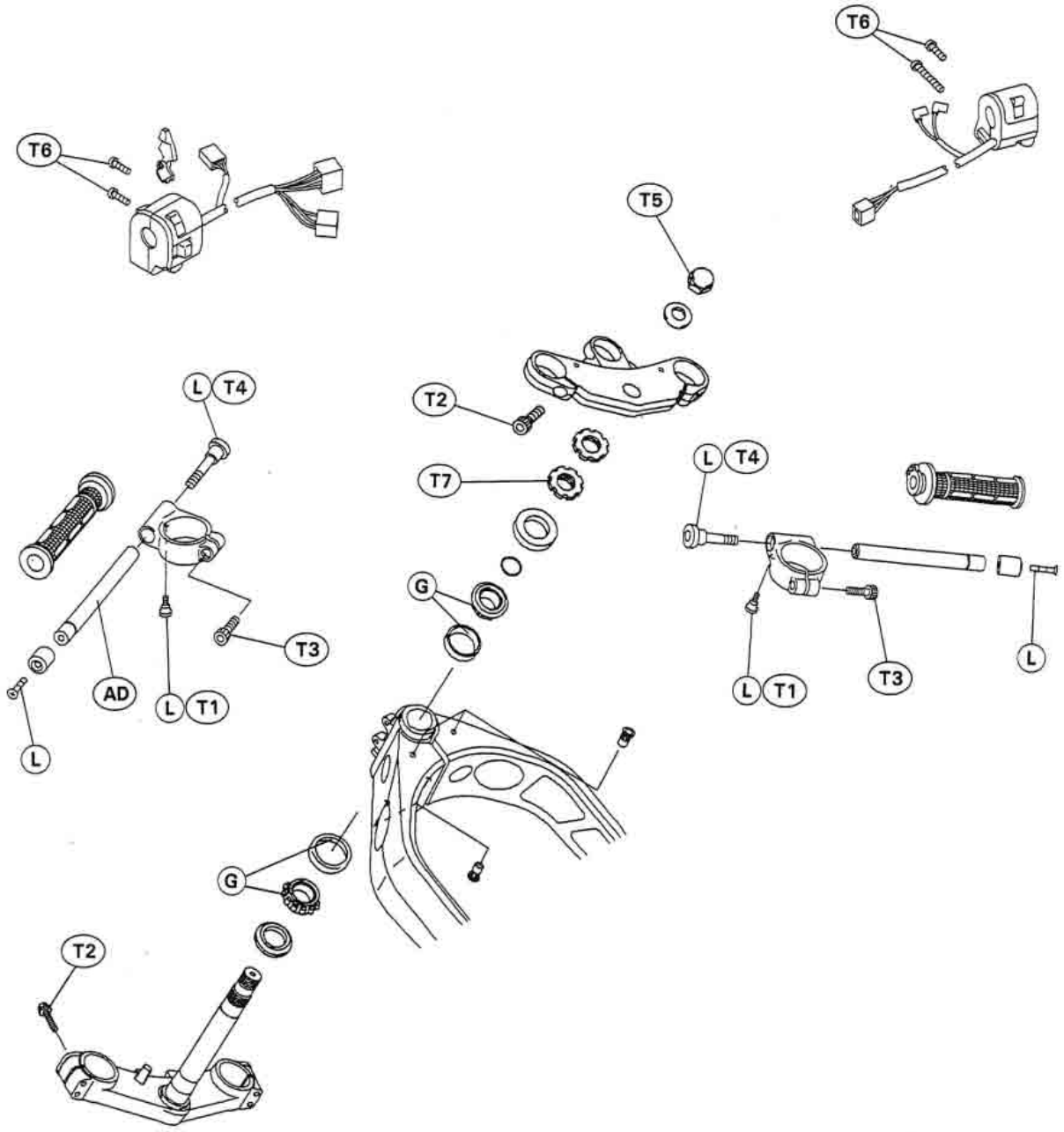

T1: 9.8 N-m (1.0 kg-m, 87 in-lb)
T2: 20 N-m (2.0 kg-m, 14.5 ft-lb)
T3: 23 N-m (2.3 kg-m, 16.5 ft-lb)
T4: 34 N-m (3.5 kg-m, 25 ft-lb)
T5: 49 N-m (5.0 kg-m, 36 ft-lb)
T6: 3.4 N-m (0.35 kg-m, 30 in-lb)
T7: 4.9 N-m (0.50 kg-m, 43 in-lb)

AD: Apply adhesive.
G: Apply grease.
L: Apply a non-permanent locking agent.

Specifications

Special Tools – **Steering Stem Nut Wrench: 57001-1100**
Head Pipe Outer Race Press Shaft: 57001-1075
Head Pipe Outer Race Driver: 57001-1106
Head Pipe Outer Race Driver: 57001-1076
Head Pipe Outer Race Remover: 57001-1107
Steering Stem Bearing Driver: 57001-137
Steering Stem Bearing Driver Adapter: 57001-1074
Jack: 57001-1238

Steering

Steering Inspection

● Check the steering.

○ Lift the front wheel off the ground using the jack.

Special Tool – Jack: 57001-1238

○ With the front wheel pointing straight ahead, alternately tap each end of the handlebar. The front wheel should swing fully left and right from the force of gravity until the fork hits the stop.

★ If the wheel binds or catches before the stop, the steering is too tight.

○ Feel for steering looseness by pushing and pulling the forks.

★ If you feel looseness, the steering is too loose.

NOTE

○ *The cables and wiring will have some effect on the motion of the fork which must be taken into account.*
Be sure the wires and cables are properly routed.

○ *The bearings must be in good condition and properly lubricated in order for any test to be valid.*

Steering Adjustment

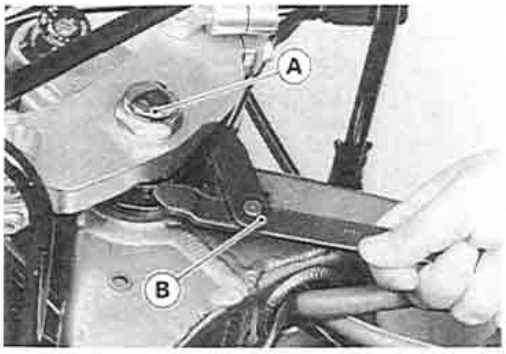

● Remove:
Upper fairing (see Frame chapter)
Fuel Tank (see Fuel System chapter)
Air Cleaner Housing (see Fuel System chapter)

● Loosen:
Lower Fork Clamp Bolts (both sides)
Stem Head Nut [A]

● Adjust the steering.

Special Tool – Steering Stem Nut Wrench: 57001-1100 [B]

★ If the steering is too tight, loosen the stem nut a fraction of a turn.

★ If the steering is too loose, tighten the nut a fraction of a turn.

NOTE

○ *Turn the stem nut 1/8 turn at a time maximum.*

● Tighten the steering stem head nut and lower fork clamp bolts.

Torque – Steering Stem Head Nut: 49 N-m (5.0 kg-m, 36 ft-lb)
Front Fork Clamp Bolts (Lower): 20 N-m (2.0 kg-m, 14.5 ft-lb)

● Check the steering again.

★ If the steering is still too tight or too loose, repeat the adjustment.

Steering Stem

Stem, Stem Bearing Removal

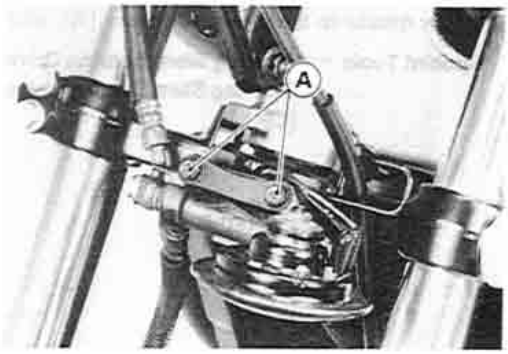

- Remove:
  - Upper and Lower Fairings (see Frame chapter)
  - Fuel Tank (see Fuel System chapter)
  - Air Cleaner Housing (see Fuel System chapter)
  - Rear View Mirror Bracket
  - Brake Hose Joint and Horn Bracket Mounting Bolts [A]
  - Front Wheel (see Wheels/Tires chapter)
  - Front Fork (see Suspension chapter)
  - Steering Stem Head Nut and Washer
  - Steering Stem Head

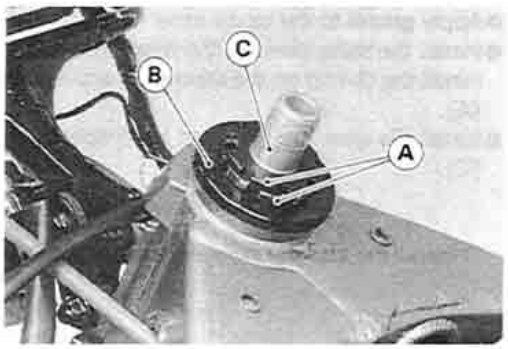

- Pushing up the stem base, and remove the steering stem locknuts [A], stem cap [B] and O-ring, then remove the steering stem [C] and stem base.

  Special Tool – Steering Stem Nut Wrench: 57001-1100

- Remove the upper stem bearing inner race.

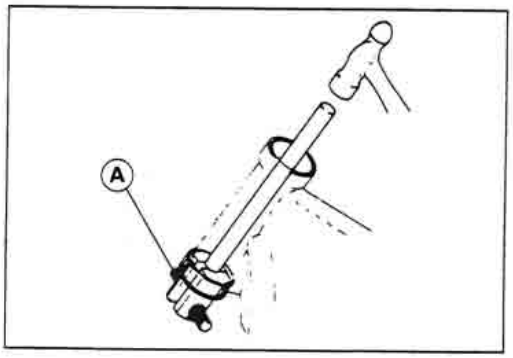

- Drive out the bearing outer races from the head pipe.

  Special Tool – Head Pipe Outer Race Remover: 57001-1107 [A]

NOTE

○ *If either steering stem bearing is damaged, it is recommended that both the upper and lower bearings (including outer races) should be replaced with new ones.*

- Remove the lower stem bearing (with its grease seal) which is pressed onto the steering stem with a suitable commercially available bearing puller.

Stem, Stem Bearing Installation

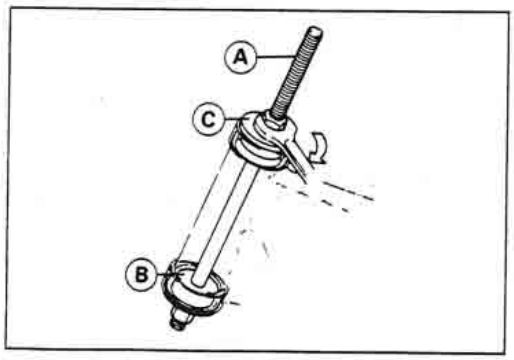

- Apply grease to the outer races, and drive them into the head pipe at the same time.

  Special Tools – Head Pipe Outer Race Press Shaft: 57001-1075 [A]
  Head Pipe Outer Race Drivers: 57001-1106 [B]
  Head Pipe Outer Race Drivers: 57001-1076 [C]

● Apply grease to the lower inner race [A], and drive it onto the stem.

Special Tools – Steering Stem Bearing Driver: 57001-137 [B]
Steering Stem Bearing Driver Adapter: 57001-1074 [C]

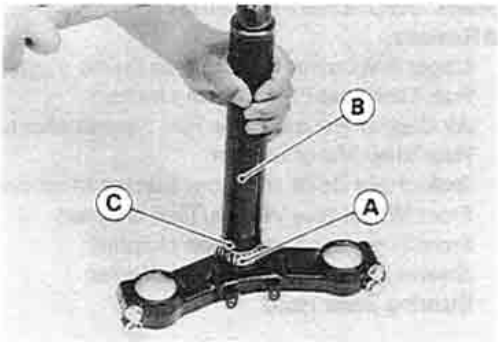

● Apply grease to the upper inner race, and install it in the head pipe.
● Install the stem through the head pipe and the upper inner race, and install the O-ring on the stem shaft while pushing up on the stem base [A].
● Install the stem cap [B], and hand tighten the steering stem locknuts [C].

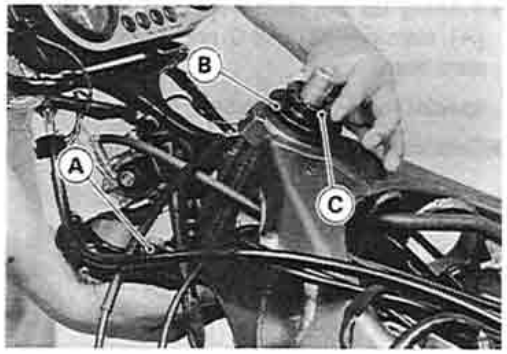

NOTE

○ *Install the steering stem nut so that the stepped side faces down.*

● Install the stem head.
● Install the washer, and tighten the stem head nut lightly.
● Settle the inner races in place as follows:
○ Tighten the steering stem locknut to 39 N-m (4.0 kg-m, 29 ft-lb) of torque. (To tighten the steering stem locknut to the specified torque, hook the wrench on the stem locknut, and pull the wrench at the hole by 22.2 kg force in the direction shown.)

Special Tool – Steering Stem Nut Wrench: 57001-1100 [A]

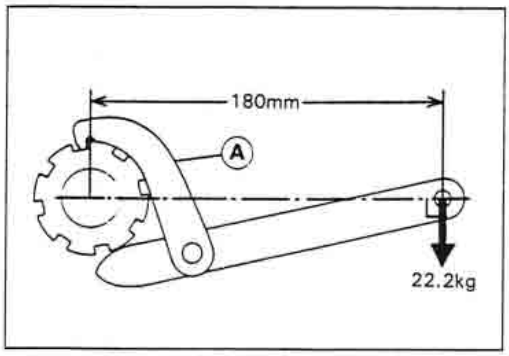

○ Check that there is no play and the steering stem turns smoothly without rattles. If not, the bearings on the inner races may be damaged.
○ Again back out the stem locknut a fraction of a turn until it turns lightly.
● Turn the stem locknut lightly clockwise until it just becomes hard to turn. Do not overtighten, or the steering will be too tight.

Torque – Steering Stem Nut: 4.9 N-m (0.50 kg-m, 43 in-lb)

● Install the front fork (see Suspension chapter).

NOTE

○ *Tighten the fork upper clamp bolts first, next the stem head nut, last the fork lower clamp bolts.*

Torque – Steering Stem Head Nut : 49 N-m (5.0 kg-m, 36 ft-lb)
Front Fork Clamp Bolts (Upper) : 20 N-m (2.0 kg-m, 14.5 ft-lb)
(Lower) : 20 N-m (2.0 kg-m, 14.5 ft-lb)

● Install the removed parts (see appropriate chapters).

⚠WARNING

Do not impede the handlebar turning by routing the cables, harnesses and hoses improperly (see General Information chapter).

Stem Bearing Lubrication

- Remove the steering stem.
- Using a high flash-point solvent, wash the upper and lower tapered roller bearings in the cages, and wipe the upper and lower outer races, which are press-fitted into the frame head pipe, clean off grease and dirt.
- Visually check the outer races and the rollers.

★Replace the bearing assemblies if they show wear or damage.

- Pack the upper and lower tapered roller bearings [A] in the cages with grease, and apply a light coat of grease to the upper and lower outer races.
- Install the steering stem, and adjust the steering.

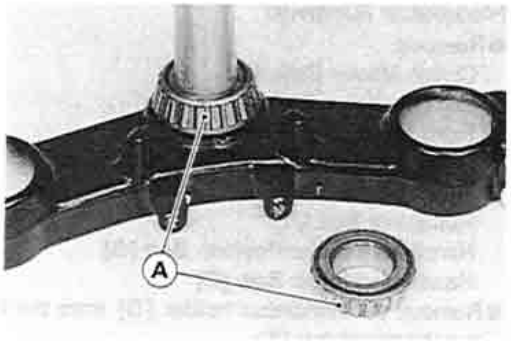

Handlebar

Handlebar Removal

- Remove:
  - Clutch Master Cylinder
  - Left Handlebar Switch Housing
  - Front Brake Master Cylinder
  - Right Handlebar Switch Housing
  - Throttle Grip
  - Handlebar Bolt [A]
  - Handlebar Holder Position Bolt [B]
  - Handlebar Holder Bolt [C]
- Remove the handlebar holder [D] from the front fork, and then pull out the handlebar [E].

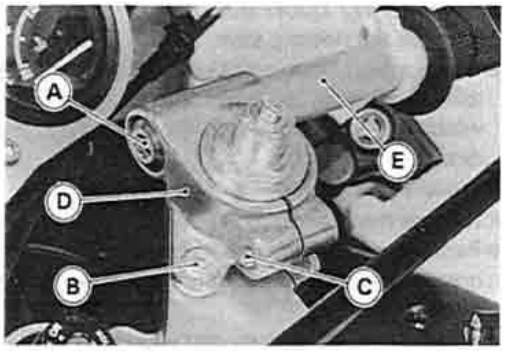

Handlebar Installation

- Fit the pin [A] of the handlebar in the handlebar holder recess [B].
- Apply a non-permanent locking agent to the threads of handlebar holder position bolts and handlebar bolts, and tighten the following bolts.

Torque – Handlebar Holder Bolts: 23 N-m (2.3 kg-m, 16.5 ft-lb)
Handlebar Holder Position Bolts: 9.8 N-m (1.0 kg-m, 87 in-lb)
Handlebar Bolts: 34 N-m (3.5 kg-m, 25 ft-lb)

- Install the removed parts (see appropriate chapters).

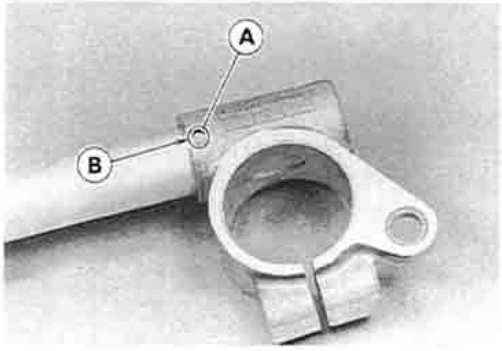

Frame

Table of Contents

Exploded View

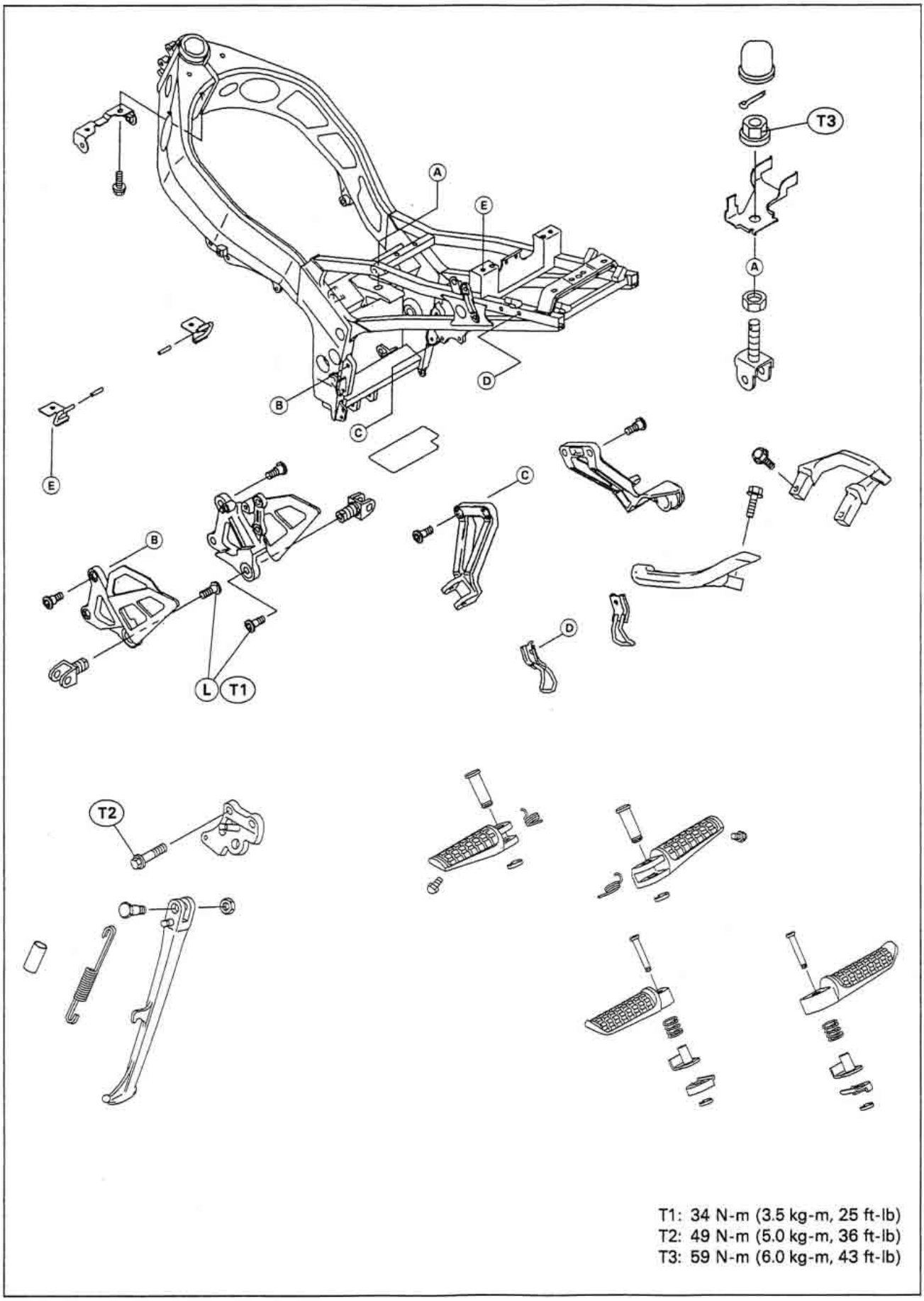

T1: 34 N-m (3.5 kg-m, 25 ft-lb)
T2: 49 N-m (5.0 kg-m, 36 ft-lb)
T3: 59 N-m (6.0 kg-m, 43 ft-lb)

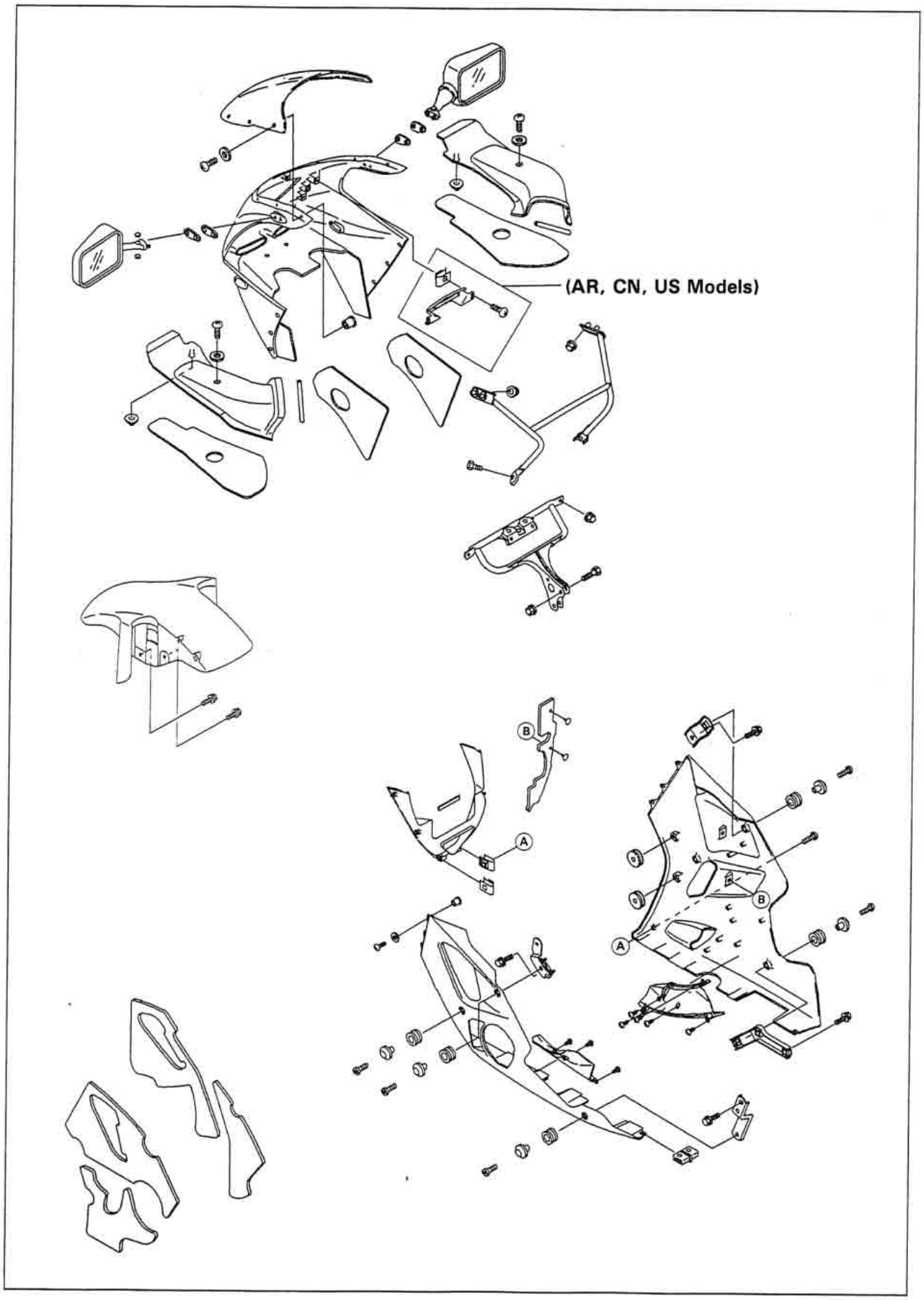
(AR, CN, US Models)
B
A
B
A

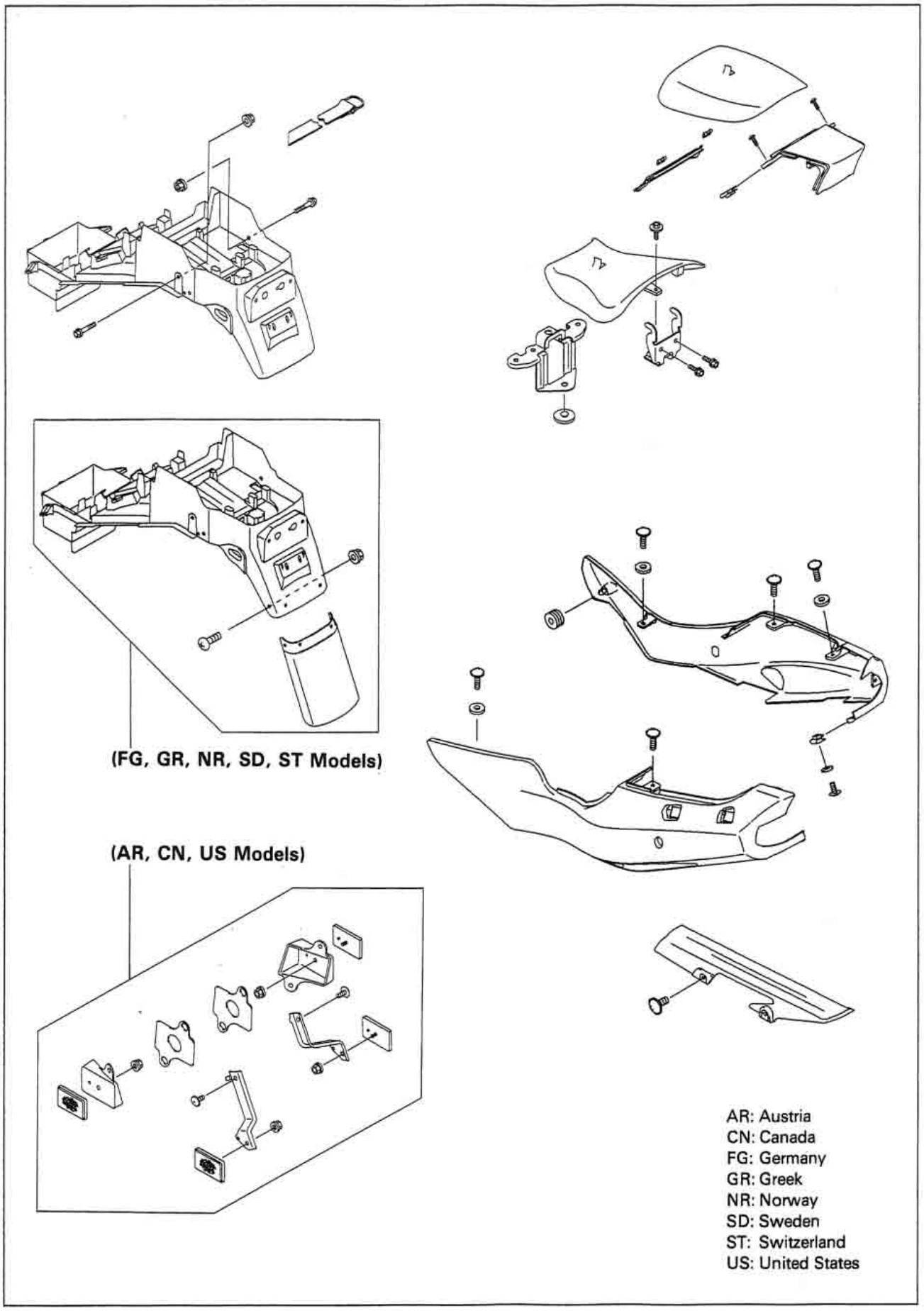
(FG, GR, NR, SD, ST Models)
(AR, CN, US Models)
AR: Austria
CN: Canada
FG: Germany
GR: Greek
NR: Norway
SD: Sweden
ST: Switzerland
US: United States

Seats

Rear Seat Removal

- Insert the ignition switch key into the seat lock [A], turning the key counterclockwise, pulling up on the rear of the seat [B], and pulling the seat forward.

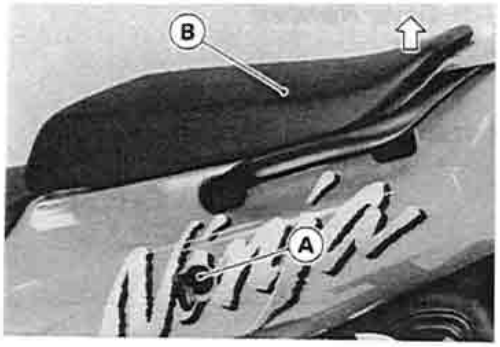

Rear Seat Installation

- Slip the rear loop [A] under the hooks [B] on the hook bracket [C].
- Insert the seat pin [D] into the latch hole [E].
- Push down the rear part of the seat until the lock clicks.

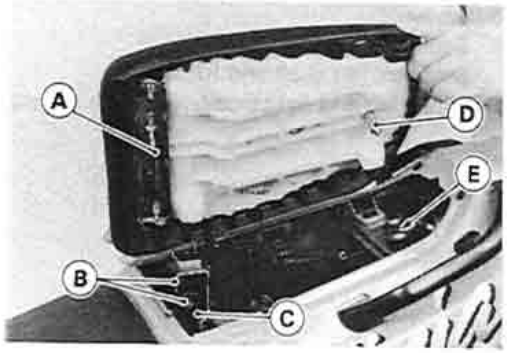

Front Seat Removal

- Remove:
  - Rear Seat (see Rear Seat Removal)
  - Clips [A]
  - Partition [B]
  - Mounting Bolt [C]
- Remove the front seat [D] by pulling it up on the rear and to the rear.

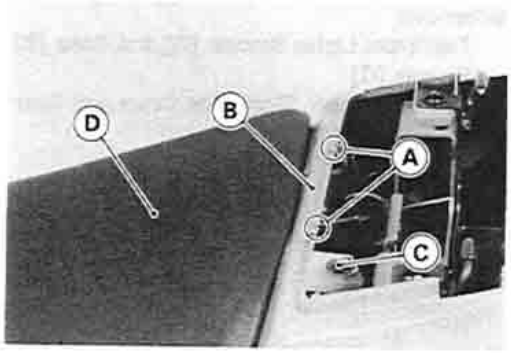

Front Seat Installation

- Slip the front seat hook [A] under the brace [B] on the fuel tank bracket [C].

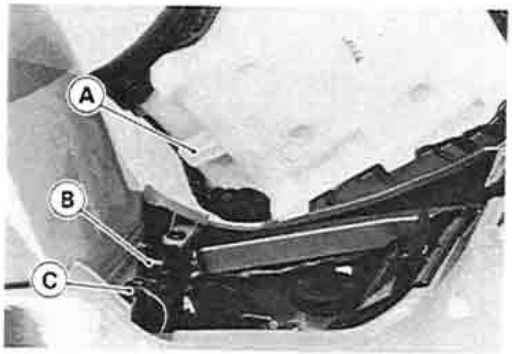

Side Covers

Side Cover Removal

- Remove:
  - Seats
  - Bolts [A] and Grab Rails [B]
  - Tail/Brake Lights Lead Connector [C]

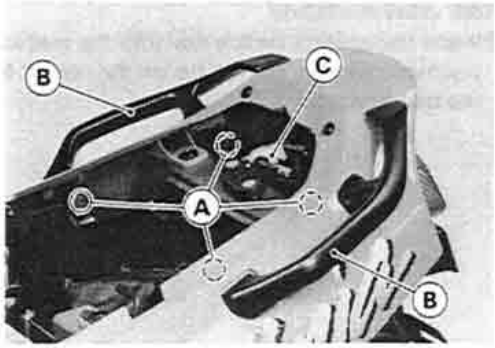

- Remove:
  - Screws [A]
  - Stoppers [B] (Left and Right)
- Pull the left and right side covers with the tail/brake lights backward.

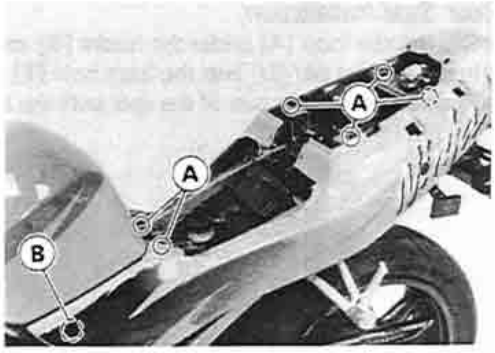

- Remove:
  - Tail/Brake Lights Bracket [A] and Bolts [B]
  - Screws [C]
  - Left Side Cover, Right Side Cover and Rear Center Cover [D]

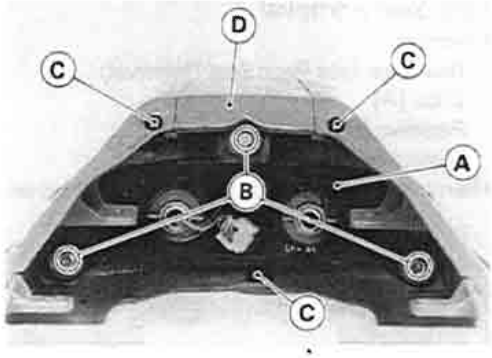

Fairings

Inner Fairing Removal

- Remove the screw [A], and pull the front part of the inner fairing [B] upward [C] to clear the stopper.
- Remove the inner fairing.
- Remove the other inner fairing in the same manner.

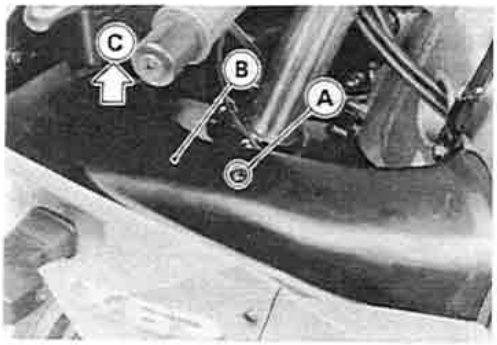

Inner Fairing Installation

- Fit the projection [A] on the inner fairing [B] into the hole [C] in the air intake duct [D].
- Install the screws.

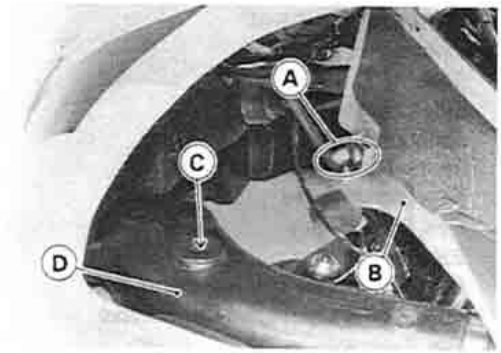

Upper Fairing Removal

- Remove:
  - Inner Fairing
  - Rear View Mirrors [A]
  - Screws [B] (Left and Right)
  - Bracket Nuts [C] (Left and Right)
  - Headlight Connector [D]
  - Turn Signal Light Lead Connectors
  - City Light Connector (other than US, Canada and Australia)
- Remove the upper fairing.

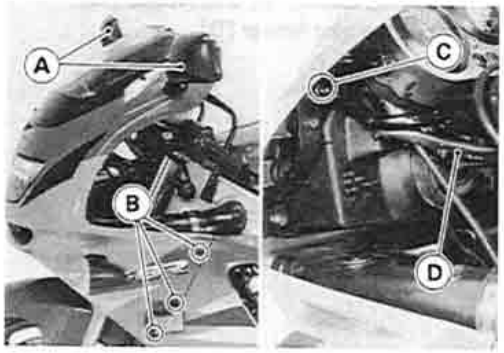

Lower Fairing Removal

- Remove:
  - Screws [A] [B]
  - Allen Bolts [C]
  - Clamp [D]
- Pull the lower front part of the lower fairing outward to clear the stoppers [E].
- Remove the lower fairing.
- Remove the other lower fairing in the same manner.

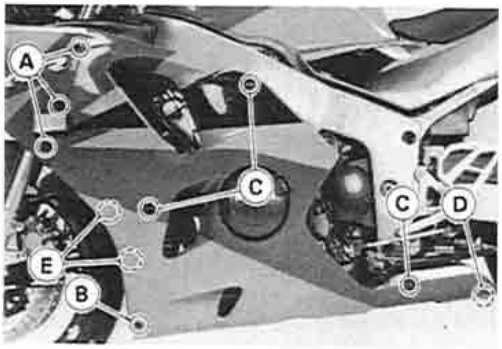

NOTE

○ *If when the left and right lower fairings removed at the same time, do not remove the screws [B] (both sides), clamp [D] and stoppers [E].*

Fenders

Front Fender Removal

- Remove:
  - Brake Hose Clamps [A] (Left and Right)
  - Speedometer Cable Clamp [B]
  - Bolts [C]
- Remove the front fender [D].

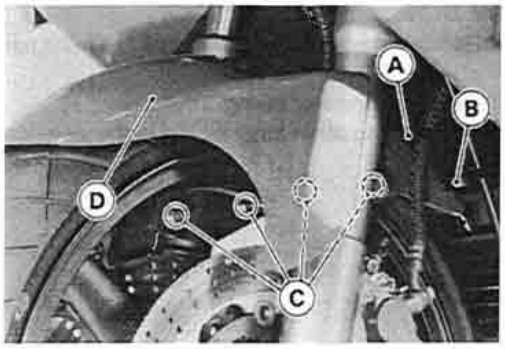

Rear Fender Removal

- Remove:
  - Seats
  - Side Covers
  - Junction Box
  - Starter Relay and Main Fuse
  - Turn Signal Relay
  - Fuel Pump Relay
  - Battery
  - Rear Brake Reservoir Mounting Bolt
  - Turn Signal Light Lead Connectors
  - Gas Reservoir
  - Bolts [A], Clamp [B] and Hooks [C]
- Remove the rear fender [D].

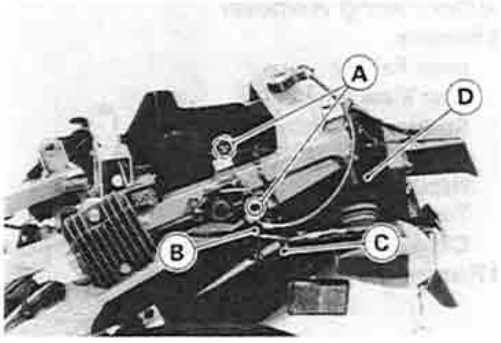

Electrical System

Table of Contents

Parts Location

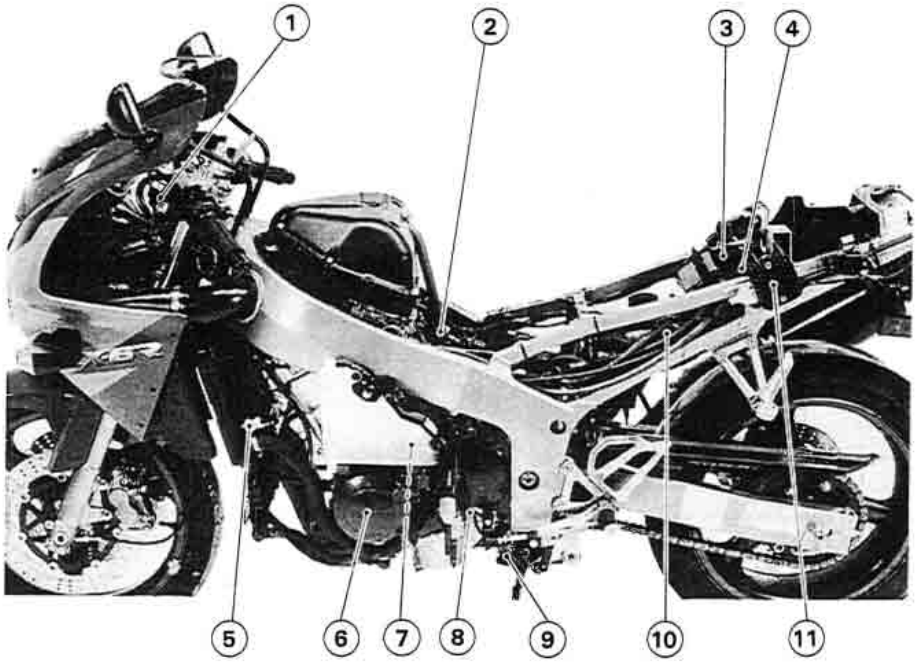

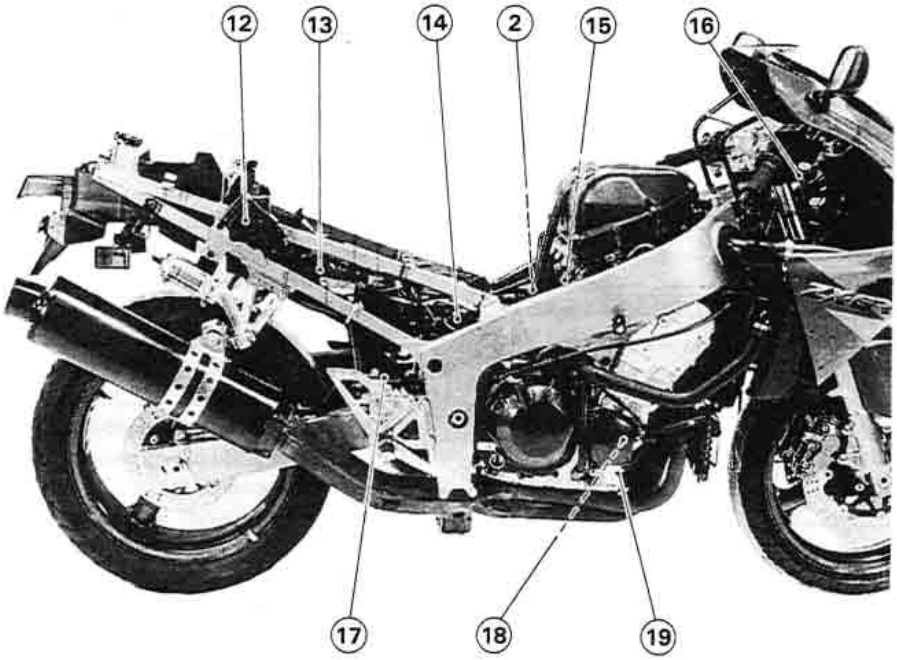

1. Starter Lockout Switch
2. Ignition Coils
3. Fuel Pump Relay
4. Turn Signal Relay
5. Radiator Fan Switch
6. Alternator
7. Starter Motor
8. Neutral Switch
9. Side Stand Switch
10. Starter Relay and Main Fuse
11. Regulator/Rectifier
12. IC Igniter
13. Junction Box
14. Fuel Pump
15. Water Temperature Sensor
16. Front Brake Light Switch
17. Rear Brake Light Switch
18. Pickup Coil
19. Oil Pressure Switch

Exploded View

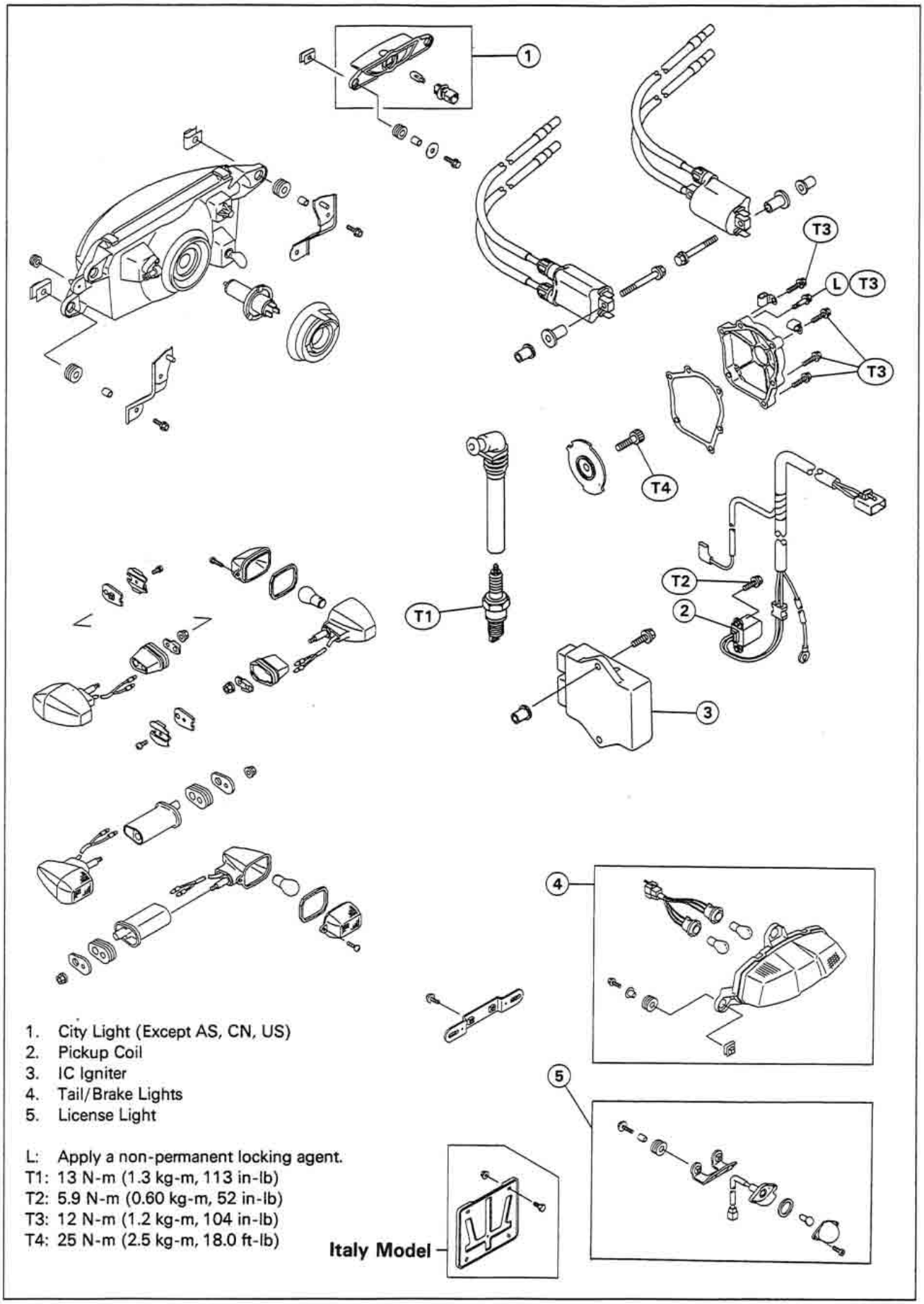

1. City Light (Except AS, CN, US)
2. Pickup Coil
3. IC Igniter
4. Tail/Brake Lights
5. License Light

L: Apply a non-permanent locking agent.
T1: 13 N-m (1.3 kg-m, 113 in-lb)
T2: 5.9 N-m (0.60 kg-m, 52 in-lb)
T3: 12 N-m (1.2 kg-m, 104 in-lb)
T4: 25 N-m (2.5 kg-m, 18.0 ft-lb)

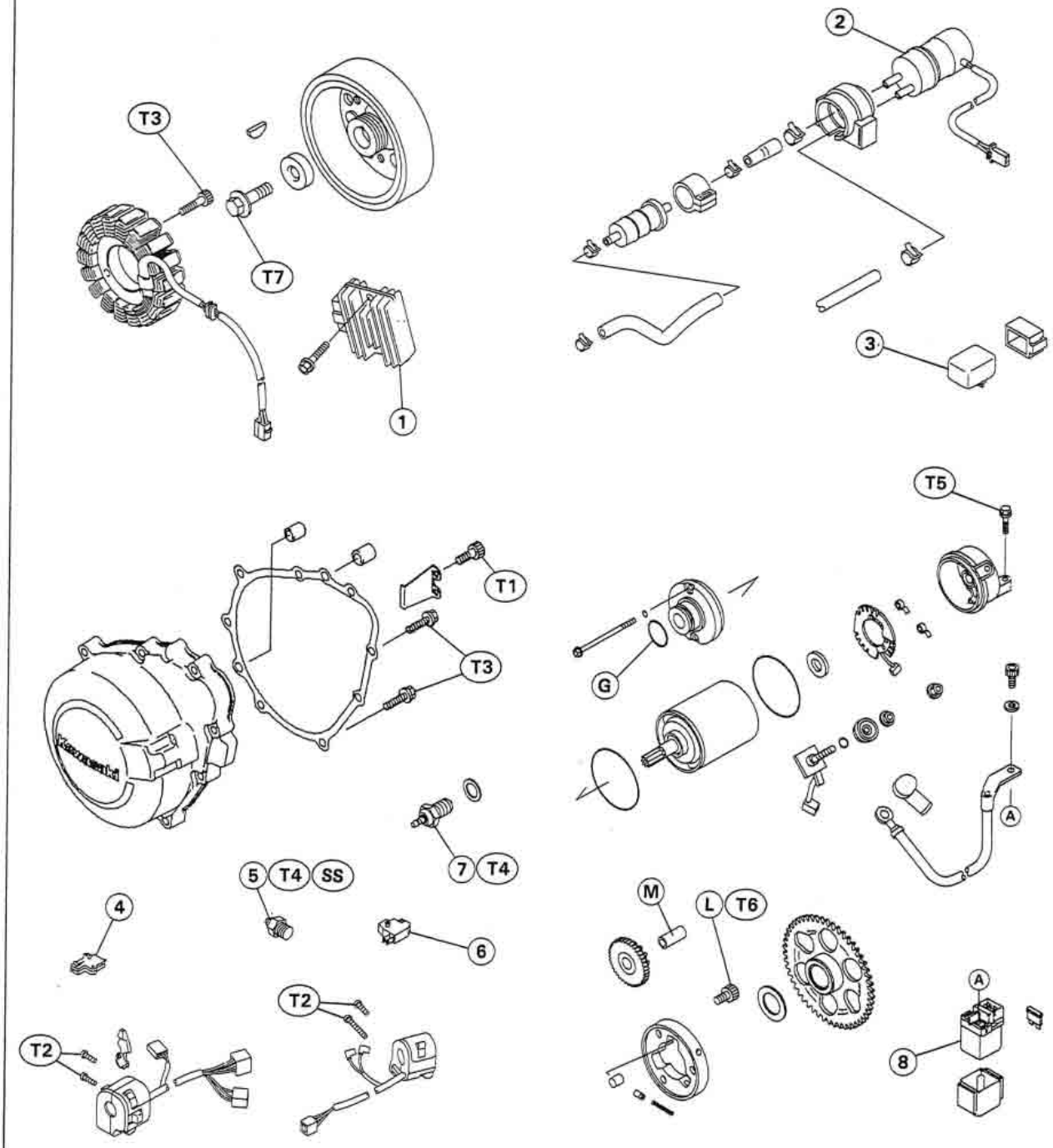

L: Apply a non-permanent locking agent.
SS: Apply silicone sealant
M: Apply molybdenum disulfide grease.
G: Apply grease or engine oil.

1. Regulator/Rectifier
2. Fuel Pump
3. Fuel Pump Relay
4. Starter Lockout Switch
5. Oil Pressure Switch
6. Front Brake Light Switch
7. Neutral Switch
8. Starter Relay/Main Fuse

T1: 8.3 N-m (0.85 kg-m, 74 in-lb)
T2: 3.4 N-m (0.35 kg-m, 30 in-lb)
T3: 12 N-m (1.2 kg-m, 104 in-lb)
T4: 15 N-m (1.5 kg-m, 11.0 ft-lb)
T5: 9.8 N-m (1.0 kg-m, 87 in-lb)
T6: 33 N-m (3.4 kg-m, 25 ft-lb)
T7: 110 N-m (11.0 kg-m, 80 ft-lb)

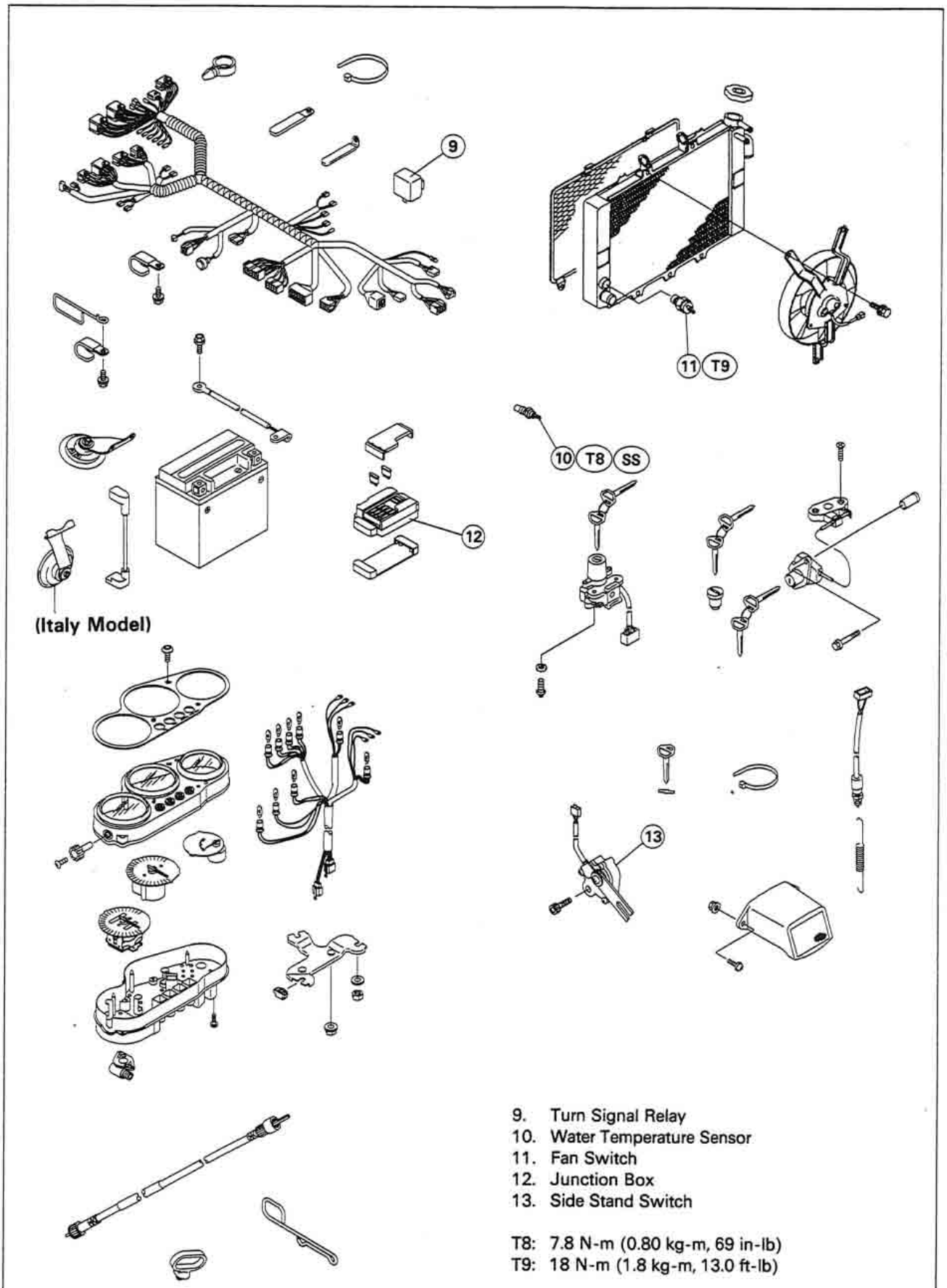

9. Turn Signal Relay
10. Water Temperature Sensor
11. Fan Switch
12. Junction Box
13. Side Stand Switch

T8: 7.8 N-m (0.80 kg-m, 69 in-lb)
T9: 18 N-m (1.8 kg-m, 13.0 ft-lb)

Specifications

Item	Standard
Battery:	
Type	MF (Maintenance Free) Battery
Capacity	12 V 10 Ah
Voltage	12.6 V or more
Charging System:	
Type	Three-phase AC
Alternator output voltage	45 V or more
Stator coil resistance	0.2 ~ 0.6 Ω
Charging voltage (regulator/rectifier output valtage)	14 ~ 15 V
Ignition System:	
Pickup coil resistance	380 ~ 570 Ω
Ignition coil:	
3 needle arcing distance	6 mm or more
Primary winding resistance	2.6 ~ 3.2 Ω
Secondary winding resistance	13 ~ 17 kΩ
Spark plug:	
Spark plug gap	0.7 ~ 0.8 mm
Spark plug cap resistance	3.75 ~ 6.25 kΩ
IC igniter internal resistance	in the text
Electric Starter System:	
Starter motor:	
Brush length	12 mm (Service limit 8.5 mm)
Commutator diameter	28 mm (Service limit 27 mm)
Fuel Pump:	
Fuel pump relay internal resistance	in the text
Fuel pump pressure	11 ~ 16 kPa (0.11 ~ 0.16 kg/cm², 1.6 ~ 2.3 psi)
Switch and Sensor:	
Rear brake light switch timing	ON after about 10 mm pedal travel
Engine oil pressure switch connections	When engine is stopped: ON When engine is running: OFF
Fan switch connections	
Rising temperature	From OFF to ON @ 93 ~ 103°C (199 ~ 217°F)
Falling temperature	From ON to OFF @ above 91°C (196°F)
	ON: Less than 0.5 Ω OFF: More than 1 MΩ
Water temperature sensor resistance	47 ~ 57 Ω @80°C (176°F) 25 ~ 30 Ω @100°C (212°F)

Special Tools – **Hand Tester: 57001-983**
Rotor Puller, M16/M18/M20/M22 x 1.5: 57001-1216
Flywheel Puller, M35 X 1.5: 57001-1223
Flywheel Holder: 57001-1313
Spark Plug Wrench, 16mm: 92110-1146

Sealant – **Kawasaki Bond (Silicone Sealant): 56019-120**

Wiring Diagram (US and Canada)

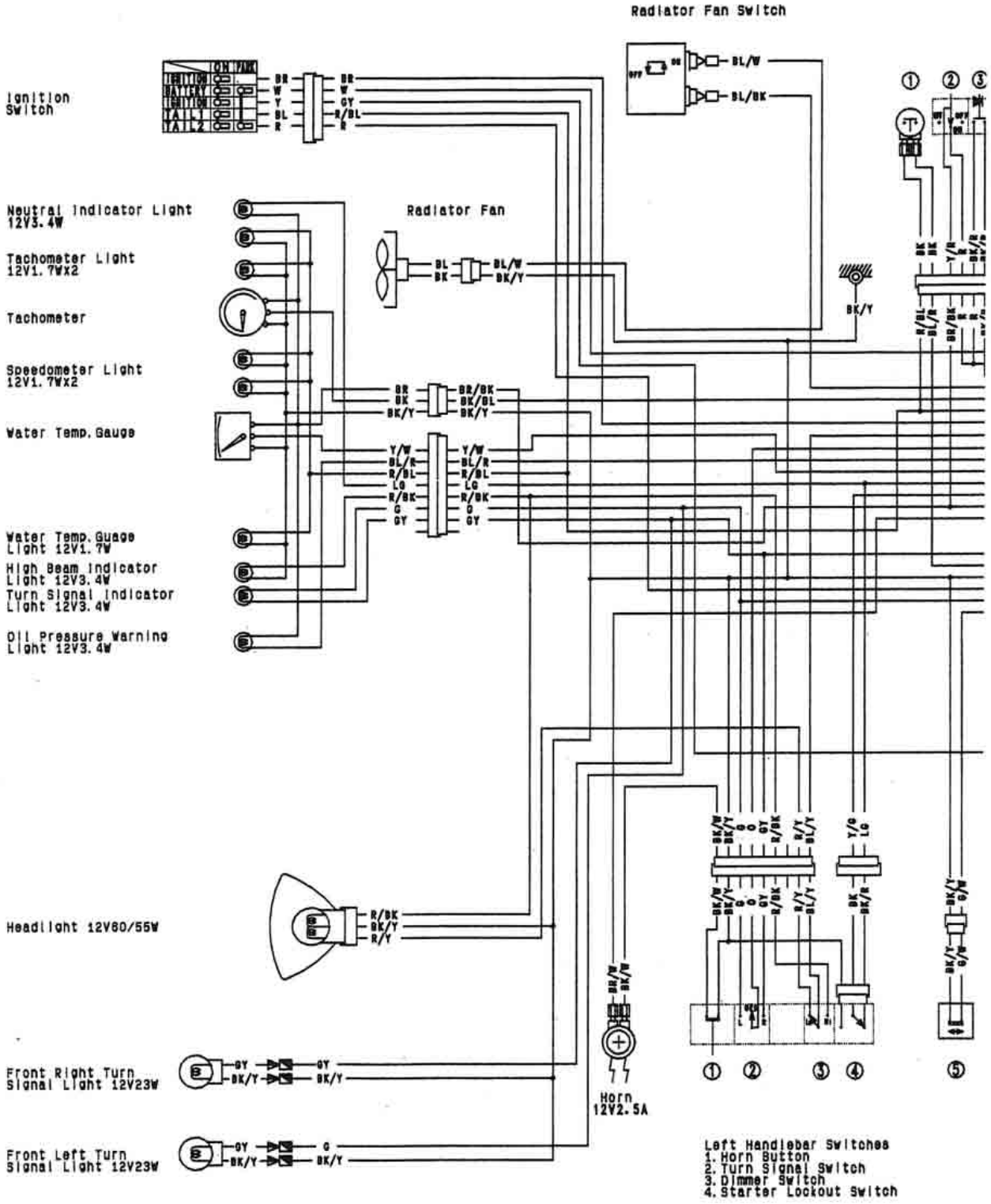

LEFT HANDLEBAR SWITCH CONNECTIONS												
Horn Button			Turn Signal Switch				Dimmer Switch				Starter Lock	
Color	BK/W	BK/Y	Color	G	O	GY	Color	R/Y	BL/Y	R/BK	Color	BK/
			L	●			HI		●		Clutch Lever	
Push	●		OFF(Push)								Released	
			R		●		LO	●			Pulled In	C

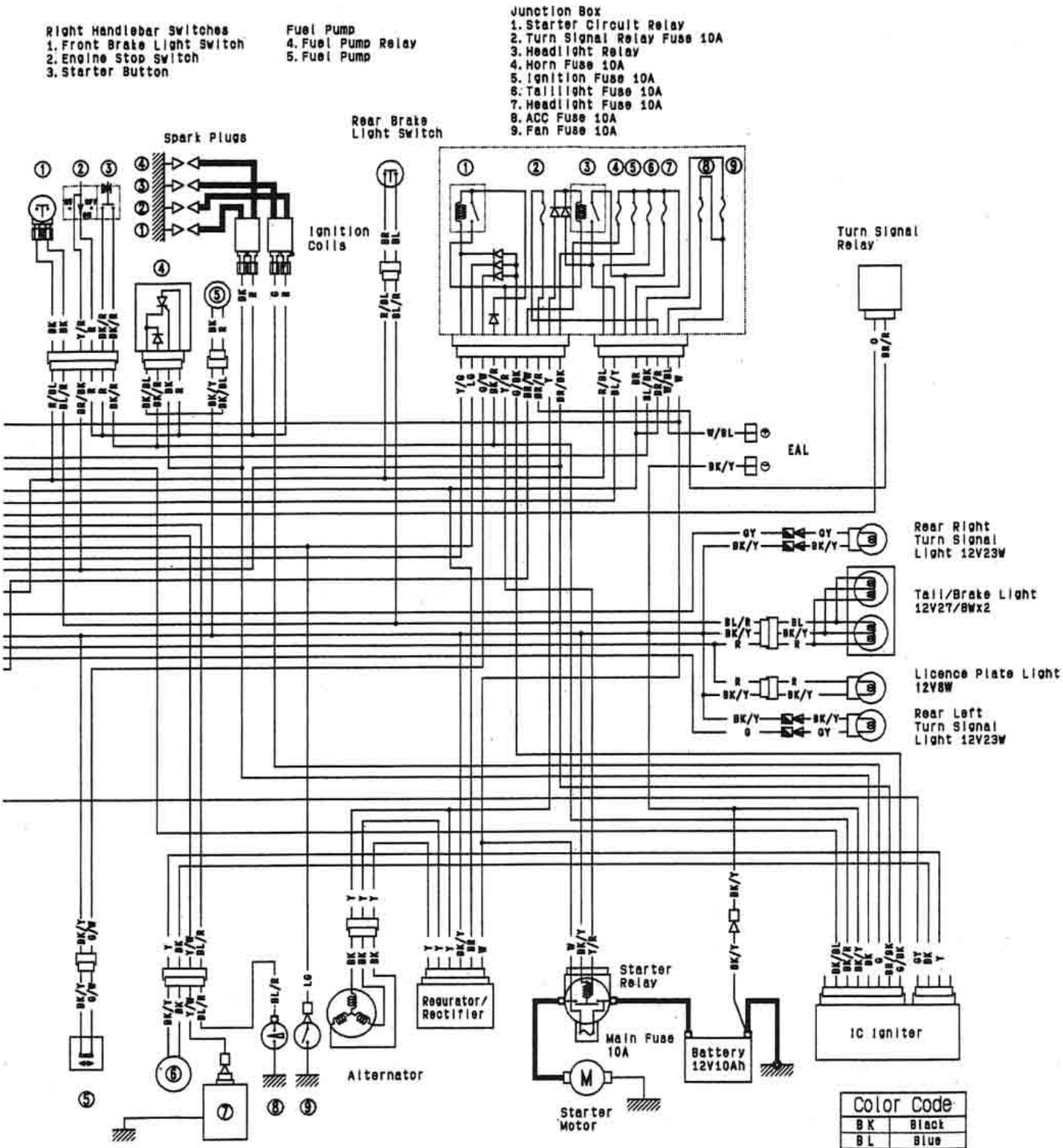

Color Code	
BK	Black
BL	Blue
BR	Brown
CH	Chocolate
DG	Dark Green
G	Green
GY	Gray
LB	Light Blue
LG	Light Green
O	Orange
P	Pink
PU	Purple
R	Red
W	White
Y	Yellow

NECTIONS				
	Starter Lockout Switch			
/BK	Color	BK/Y	BK	BK/R
	Clutch Lever			
	Released		○—○	
	Pulled In	○—○		

IGNITION SWITCH CONNECTIONS					
	Ignition	Battery	Ignition	Tail1	Tail2
Color	BR	W	Y	BL	R
OFF, LOCK					
ON	○—○		○—○	○—○	
P		○—○	○—○	○—○	

RIGHT HANDLEBAR SWITCH CONNECTIONS								
Front Brake Light Switch			Engine Stop Switch			Starter Button		
Color	BK	BK	Color	Y/R	R	Color	BK/R	BK/R
Brake Lever			OFF					
Pulled In	○—○		RUN	○—○		Push	○—○	

(98051-1488A)

Wiring Diagram (Australia)

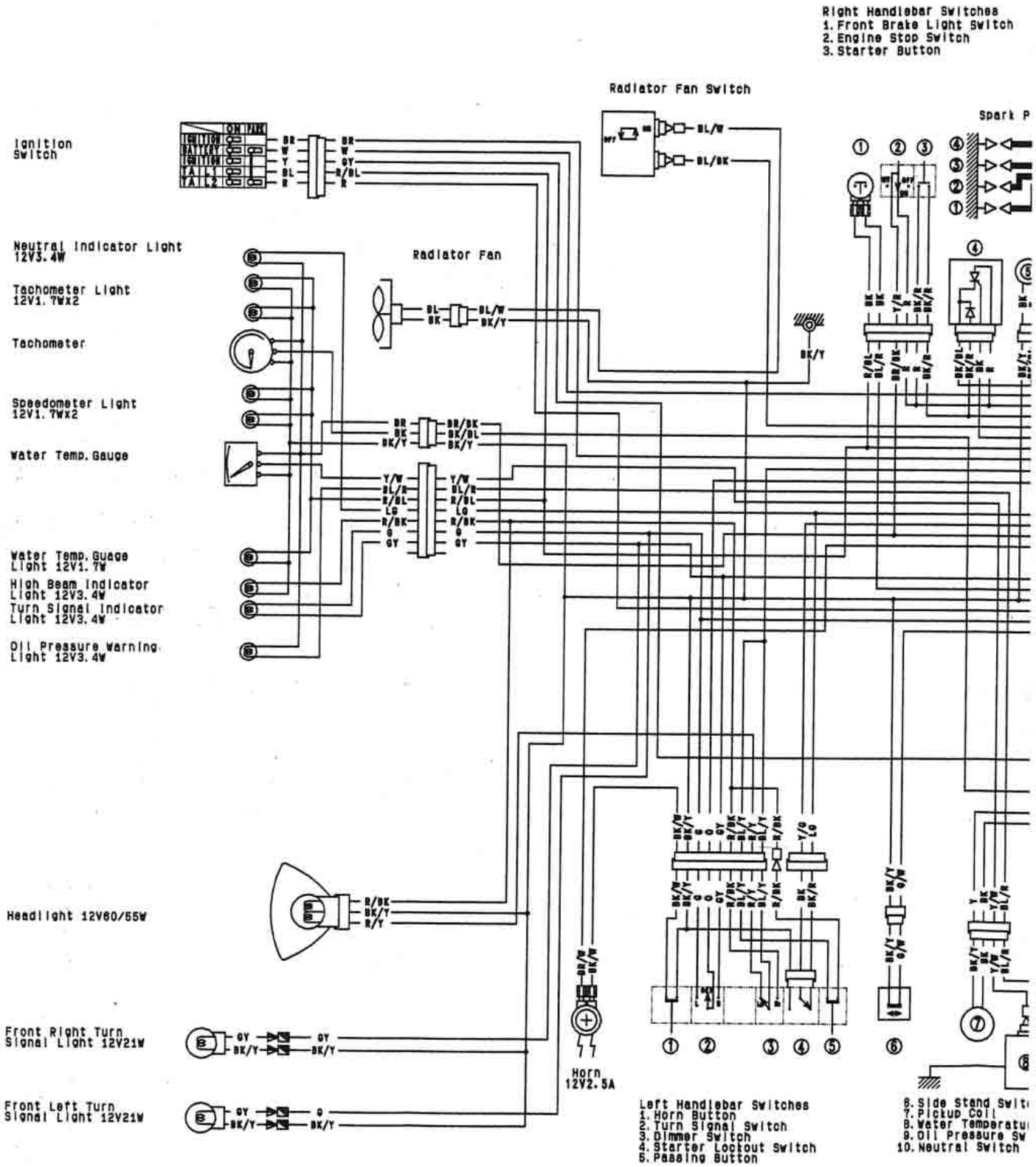

LEFT HANDLEBAR SWITCH CONNECTIONS																	
Horn Button			Turn Signal Switch				Dimmer Switch				Starter Lockout Switch				Passing Button		
Color	BK/W	BK/Y	Color	G	O	GY	Color	R/Y	BL/Y	R/BK	Color	BK/Y	BK	BK/R	Color	BL/Y	R/BK
			L	○—○			HI		○—○		Clutch Lever						
Push	○—○		OFF(Push)								Released		○—○		Push	○—○	
			R		○—○		LO	○—○			Pulled In	○—○					

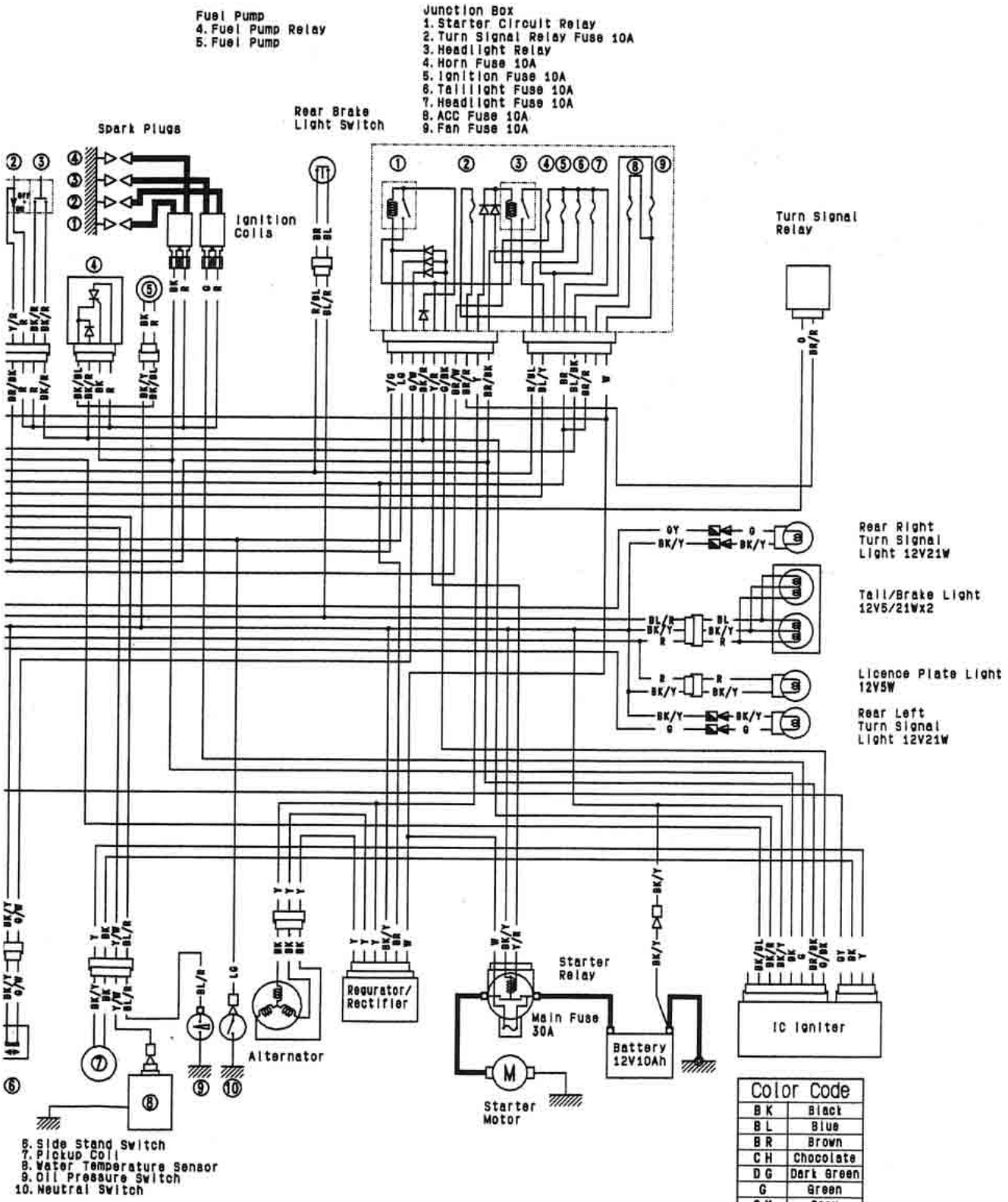

Color Code	
BK	Black
BL	Blue
BR	Brown
CH	Chocolate
DG	Dark Green
G	Green
GY	Gray
LB	Light Blue
LG	Light Green
O	Orange
P	Pink
PU	Purple
R	Red
W	White
Y	Yellow

IGNITION SWITCH CONNECTIONS

	Ignition	Battery	Ignition	Tail1	Tail2
Color	BR	W	Y	BL	R
OFF, LOCK					
ON		○—○		○—○	
P		○—○			

RIGHT HANDLEBAR SWITCH CONNECTIONS

Front Brake Light Switch			Engine Stop Switch			Starter Button		
Color	BK	BK	Color	Y/R	R	Color	BK/R	BK/R
Brake Lever			OFF					
Pulled in	○—○		RUN	○—○		Push	○—○	

(98051-1546A)

Wiring Diagram (Ohter than US, Canada, and Australia)

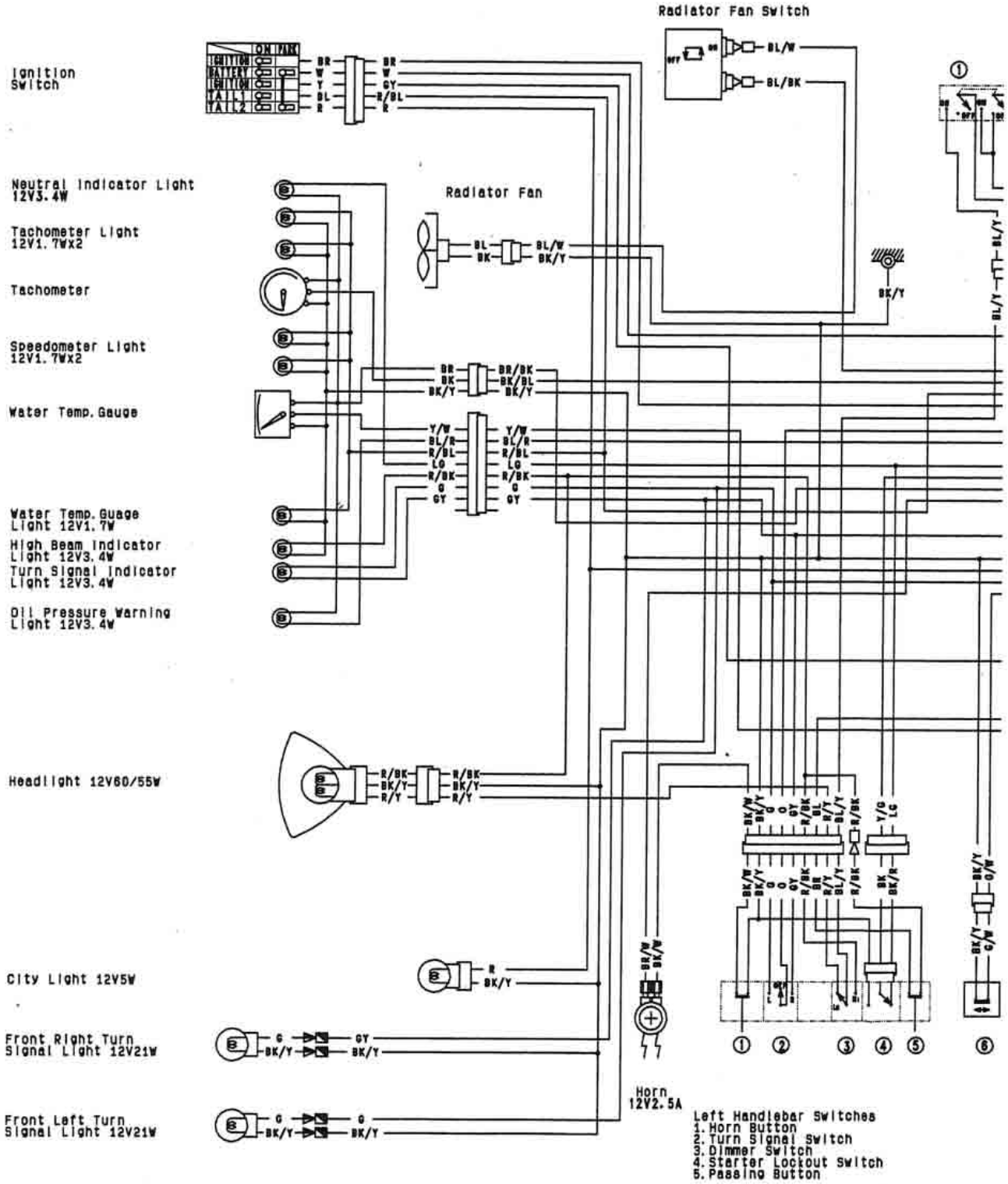

LEFT HANDLEBAR SWITCH CONNECTIONS																	
Horn Button			Turn Signal Switch				Dimmer Switch				Starter Lockout Switch				Passing Button		
Color	BK/W	BK/Y	Color	G	O	GY	Color	R/Y	BL/Y	R/BK	Color	BK/Y	BK	BK/R	Color	BR	R/BK
			L	○—○			HI		○—○		Clutch Lever						
Push	○—○		OFF(Push)								Released		○—○		Push	○—○	
			R		○—○		LO	○—○			Pulled In	○—○					

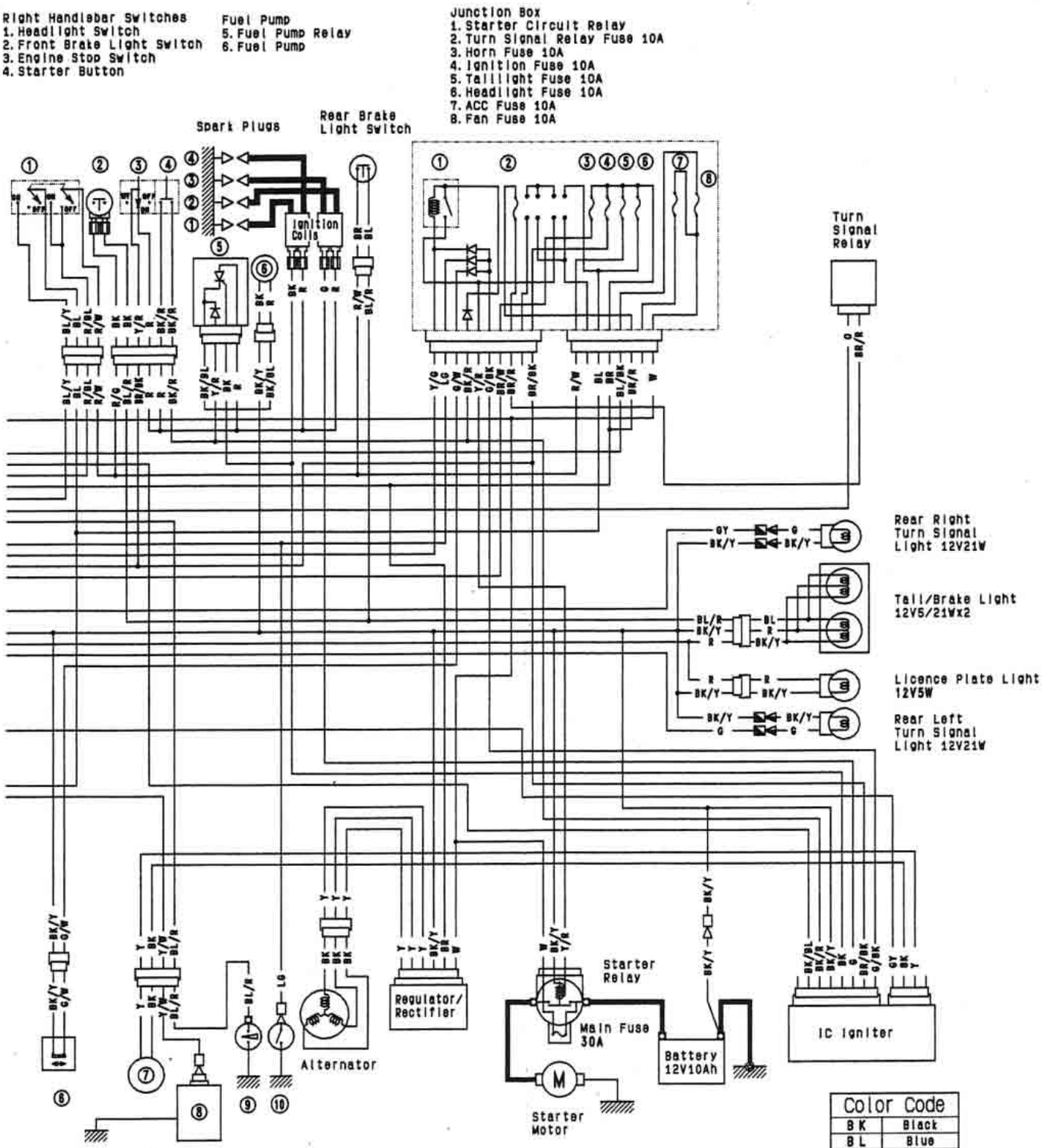

Color Code	
BK	Black
BL	Blue
BR	Brown
CH	Chocolate
DG	Dark Green
G	Green
GY	Gray
LB	Light Blue
LG	Light Green
O	Orange
P	Pink
PU	Purple
R	Red
W	White
Y	Yellow

IGNITION SWITCH CONNECTIONS

	Ignition	Battery	Ignition	Tail1	Tail2
Color	BR	W	Y	BL	R
OFF, LOCK					
ON	○	○	○	○	○
P		○	○	○	○

RIGHT HANDLEBAR SWITCH CONNECTIONS

Headlight Switch					Front Brake Light Switch			Engine Stop Switch			Starter Button		
Color	R/W	R/BL	BL	BL/Y	Color	BK	BK	Color	Y/R	R	Color	BK/R	BK/R
OFF					Brake Lever			OFF					
○	○				Pulled In	○	○	RUN	○	○	Push	○	○
ON	○		○										

(98051-1531A)

Precautions

There are a number of important precautions that are musts when servicing electrical systems. Learn and observe all the rules below.

- Do not reverse the battery lead connections. This will burn out the diodes on the electrical parts.
- Always check battery condition before condemning other parts of an electrical system A fully charged battery is a must for conducting accurate electrical system tests.
- The electrical parts should never be struck sharply, as with a hammer, or allowed to fall on a hard surface. Such a shock to the parts can damage them.
- To prevent damage to electrical parts, do not disconnect the battery leads or any other electrical connections when the ignition switch is on, or while the engine is running.
- Because of the large amount of current, never keep the starter button pushed when the starter motor will not turn over, or the current may burn out the starter motor windings.
- Do not use a meter illumination bulb rated for other than voltage or wattage specified in the wiring diagram, as the meter or gauge panel could be warped by excessive heat radiated from the bulb.
- Take care not to short the leads that are directly connected to the battery positive (+) terminal to the chassis ground.
- Troubles may involve one or in some cases all items.
  Never replace a defective part without determining what CAUSED the failure. If the failure was caused by some other item or items, they too must be repaired or replaced, or the new replacement will soon fail again.
- Make sure all connectors in the circuit are clean and tight, and examine wires for signs of burning, fraying, etc. Poor wires and bad connections will affect electrical system operation.
- Measure coil and winding resistance when the part is cold (at room temperature).
- Color Codes:

BK	Black	G	Green	P	Pink
BL	Blue	GY	Gray	PU	Purple
BR	Brown	LB	Light blue	R	Red
CH	Chocolate	LG	Light green	W	White
DG	Dark green	O	Orange	Y	Yellow

- Electrical Connectors

Female Connectors [A]

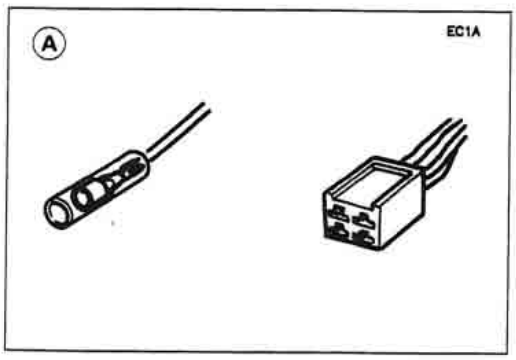

Male Connectors [B]

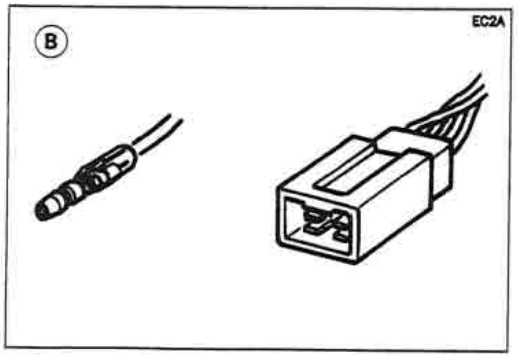

Electrical Wiring

Wiring Inspection

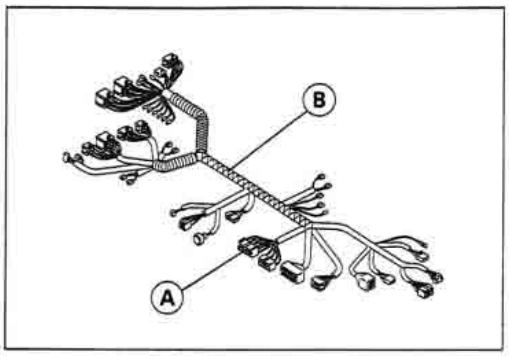

- ● Visually inspect the wiring for signs of burning, fraying, etc.
- ★ If any wiring is poor, replace the damaged wiring.
- ● Pull each connector [A] apart and inspect it for corrosion, dirt, and damage.
- ★ If the connector is corroded or dirty, clean it carefully. If it is damaged, replace it.
- ● Check the wiring for continuity.
- ○ Use the wiring diagram to find the ends of the lead which is suspected of being a problem.
- ○ Connect the hand tester between the ends of the leads.

Special Tool – Hand Tester: 57001-983

- ○ Set the tester to the x 1 Ω range, and read the tester.
- ★ If the tester does not read 0 Ω, the lead is defective. Replace the lead or the wiring harness [B] if necessary.

Battery

Charging Condition Inspection

Battery charging condition can be checked by measuring battery terminal voltage.

- Remove the seats (see Frame chapter).
- Disconnect the battery terminal leads.

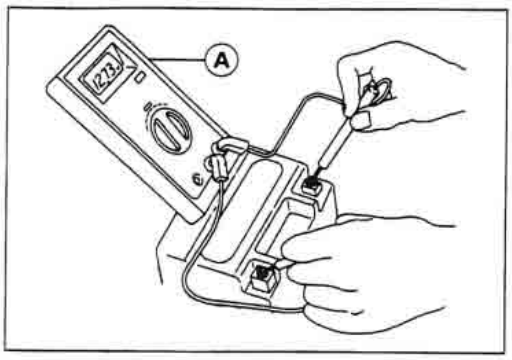

CAUTION
Be sure to disconnect the negative terminal lead first.

- Measure the battery terminal voltage.

NOTE

○ *Measure with a digital voltmeter [A] which can be read to one decimal place voltage.*

★If the reading is below the specified, refreshing charge is required.

Battery Terminal Voltage
Standard: 12.6 V or more

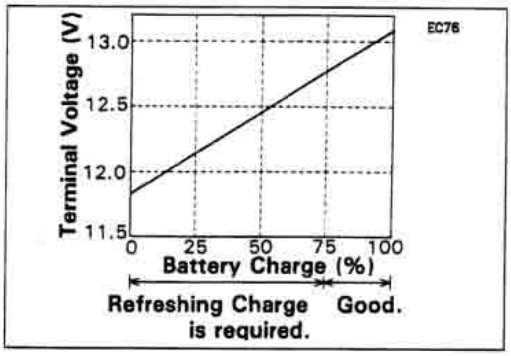

Refreshing Charge

- Disconnect the battery terminal leads (see Charging Condition Inspection).
- Remove the battery [A].
- Refresh-charge by following method according to the battery terminal voltage.

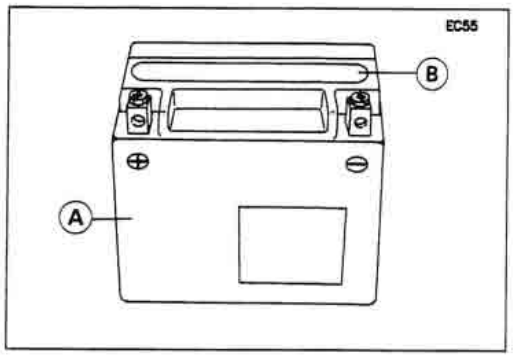

CAUTION
This battery is sealed type. Never remove sealing caps [B] even at charging. Never add water. Charge with current and time as stated below.

Terminal Voltage: 11.5 ~ less than 12.6 V
Standard Charge
1.2 A x 5 ~ 10 h (see following chart)
Quick Charge
5.0 A x 1.0 h

CAUTION
If possible, do not quick charge. If the quick charge is done due to unavoidable circumstances, do standard charge later on.

Terminal Voltage : less than 11.5 V
Charging Method : 1.2 A x 20 h

NOTE

○ *Raise the voltage initially (25 V as maximum), and charge for about 5 minutes as a yardstick. If ammeter shows no change in current after 5 minutes, you need a new battery. The current, if it can flow into the battery, tends to become excessive. Adjust the voltage as often as possible to keep the current at standard value (1.2 A).*

Battery [A]
Battery Charger [B]
Standard Value [C]

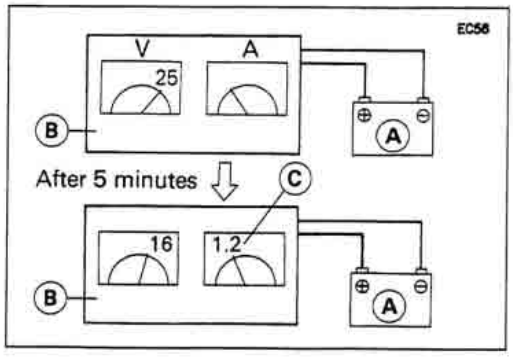

Battery Standard Charge Time Chart

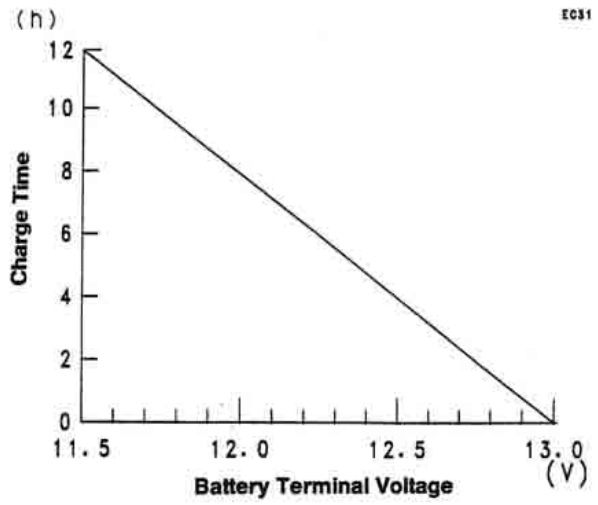

● Determine battery condition after refreshing charge.

○ Determine the condition of the battery 30 minutes after completion of the charge by measuring the terminal voltage according to the table below.

Criteria	Judgement
12.6 V or higher	Good
12.0 ~ 12.6 V or lower	Charge insufficient → Recharge.
12.0 V or lower	Unserviceable → Replace

Charging System

Alternator Cover Removal

- Remove:
  - Left Lower Fairing (see Frame chapter)
  - Coolant Reserve Tank [A]
  - Fuel Tank (see Fuel System chapter)
  - Alternator Lead Connector [B]
- Place a suitable container under the alternator cover [C], and remove the cover.

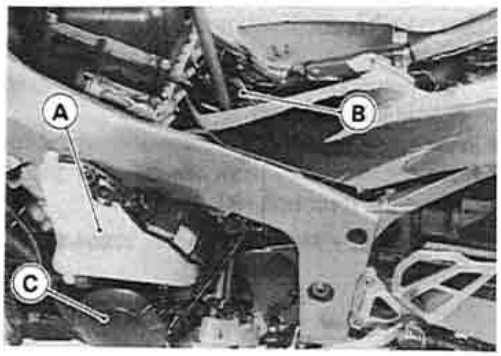

Alternator Cover Installation

- Apply silicone sealant to the alternator lead grommet and crankcase halves mating surface [A] on the front and rear sides of the cover mount.

  Sealant – Kawasaki Bond (Silicone Sealant): 56019-120

- Install a new gasket and the alternator cover.
- Tighten the cover bolts.

  Torque – Alternator Cover Bolts: 12 N-m (1.2 kg-m, 104 in-lb)

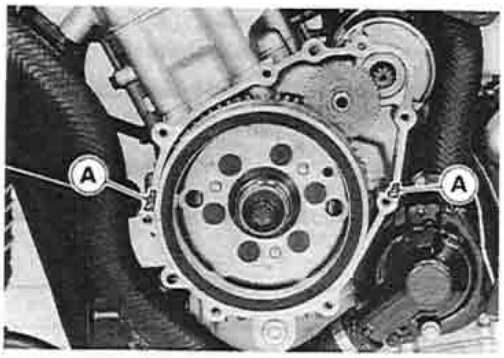

Stator Coil Removal

- Remove:
  - Alternator Cover (see Alternator Cover Removal)
  - Holding Plate Bolts [A] and Plate
  - Alternator Lead Grommet [B]
  - Stator Coil Bolts [C]
- Remove the stator coil [D] from the alternator cover.

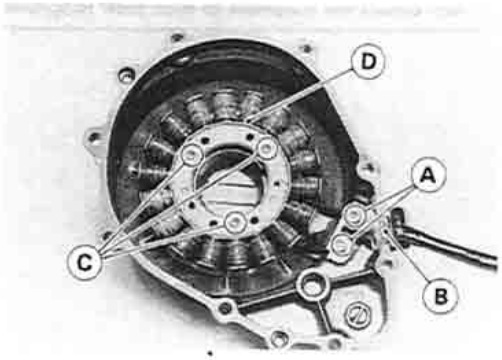

Stator Coil Installation

- Tighten the stator coil bolts.

  Torque – Stator Coil Bolts: 12 N-m (1.2 kg-m, 104 in-lb)

- Apply silicone sealant to the circumference of the alternator lead grommet, and fit the grommet into the notch of the cover securely.

  Sealant – Kawasaki Bond (Silicone Sealant): 56019-120

- Secure the alternator lead with a holding plate, and tighten the bolts.

  Torque – Alternator Lead Holding Plate Bolts: 8.3 N-m (0.85 kg-m, 74 in-lb)

- Install the alternator cover (see Alternator Cover Instalaltion).

Alternator Rotor Removal

- Remove:
  Alternator cover (see Alternator Cover Removal)
  Starter Idle Gear and Shaft
- Wipe oil off the outer circumference of the rotor.
- Hold the alternator rotor steady with the flywheel holder [A], and remove the rotor bolt [B].

Special Tool – Flywheel Holder: 57001-1313

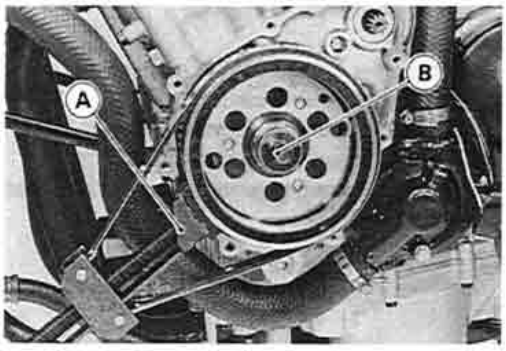

- Using the flywheel puller [A] and rotor puller [B], remove the alternator rotor from the crankshaft.

Special Tools – Flywheel Puller, M35 X 1.5: 57001-1223
Rotor Puller, M16/M18/M20/M22 x 1.5: 57001-1216

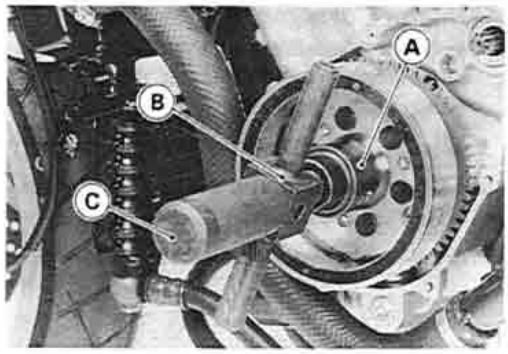

NOTE

○ *Screw in the puller while tapping the head [C] of the puller with a hammer.*

CAUTION
Do not attempt to strike the alternator rotor itself. Striking the rotor can cause the magnets to lose their magnetism.

Alternator Rotor Installation

- Using a cleaning fluid, clean off any oil or dirt on the following portions and dry them with a clean cloth.
  [A] Crankshaft Tapered Portion
  [B] Alternator Rotor Tapered Portion
- Apply a thin coat of molybdenum disulfide grease to the crankshaft [C].

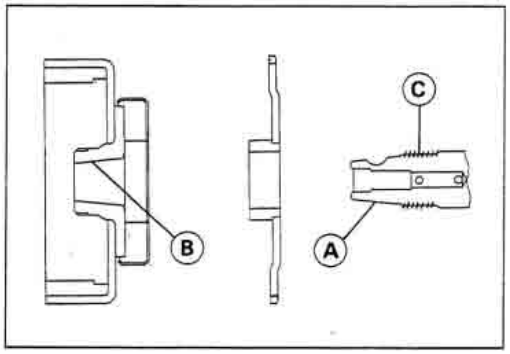

- Install the starter gear [A] and washer [B].
- Again, clean the crankshaft tapered portion [C] and dry there.
- Fit the woodruff key [D] securely in the slot in the crankshaft before installing the alternator rotor.

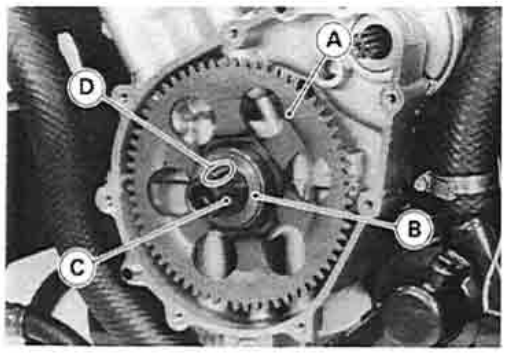

● Install the alternator rotor [A] while turning [B] the starter gear [C].

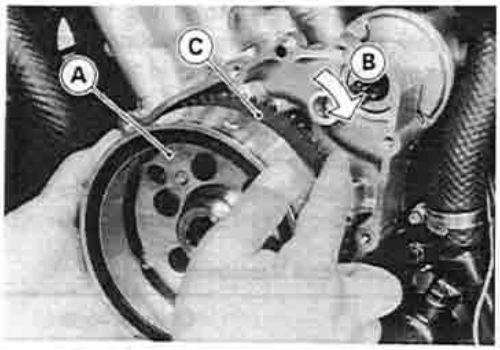

● Install the washer [A] so that the chamfer side [B] faces outward.

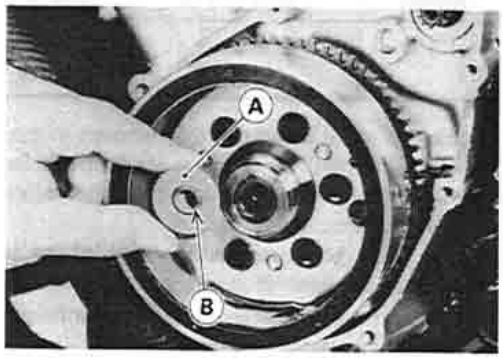

● Tighten the alternator rotor bolt while holding the alternator rotor steady with the flywheel holder.

Special Tool – Flywheel Holder: 57001-1313
Torque – Alternator Rotor Bolt: 110 N-m (11.0 kg-m, 80 ft-lb)

● Install the shaft [A] and starter idle gear [B].
● Install the alternator cover (see Alternator Cover Installation).

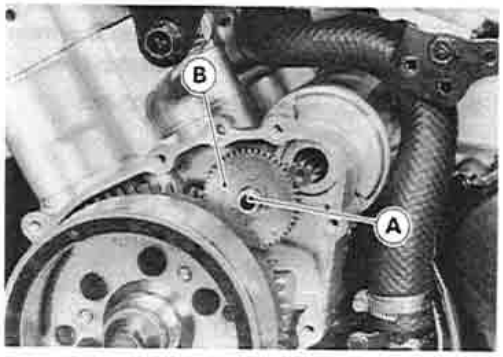

Alternator Inspection

There are three types of alternator failures: short, open (wire burned out), or loss in rotor magnetism. A short or open in one of the coil wires will result in either a low output, or no output at all. A loss in rotor magnetism, which may be caused by dropping or hitting the alternator, by leaving it near an electromagnetic field, or just by aging, will result in low output.

● To check the alternator output voltage, do the following procedures.
○ Turn off the ignition switch.
○ Remove the fuel tank (see Fuel System chapter).
○ Supply fuel to the carburetors with an auxiliary fuel tank.
○ Disconnect the alternator lead connector [A].
○ Connect the hand tester as shown in the table 1.
○ Start the engine.
○ Run it at the rpm given in the table 1.
○ Note the voltage readings (total 3 measurements).

Table 1 Alternator Output Voltage

Tester	Connections		Reading
Range	Tester (+) to	Tester (−) to	@ 4,000 rpm
250 V AC	One black lead	Another black lead	45 V or more

★If the output voltage shows the value in the table, the alternator operates properly and the regulator/rectifier is damaged. A much lower reading than that given in the table indicates that the alternator is defective.

● Check the stator coil resistance as follows.

○ Stop the engine.

○ Connect the hand tester as shown in the table 2.

○ Note the readings (total 3 measurement).

Table 2 Stator Coil Resistance

Tester Range	Connections		Reading
	Tester (+) to	Tester (−) to	
× 1 Ω	One black lead	Another black lead	0.2 ~ 0.6 Ω

★If there is more resistance than shown in the table, or no hand tester reading (infinity) for any two leads, the stator has an open lead and must be replaced. Much less than this resistance means the stator is shorted, and must be replaced.

● Using the highest resistance range of the hand tester, measure the resistance between each of the black leads and chassis ground.

★Any hand tester reading less than infinity (∞) indicates a short, necessitating stator replacement.

★If the stator coils have normal resistance, but the voltage check showed the alternator to be defective; then the rotor magnets have probably weakened, and the rotor must be replaced.

Special Tool − Hand Tester: 57001-983

Regulator/Rectifier Inspection

● Remove:

Side Covers (see Frame chapter)

Connector [A] (disconnect)

Regulator/Rectifier [B]

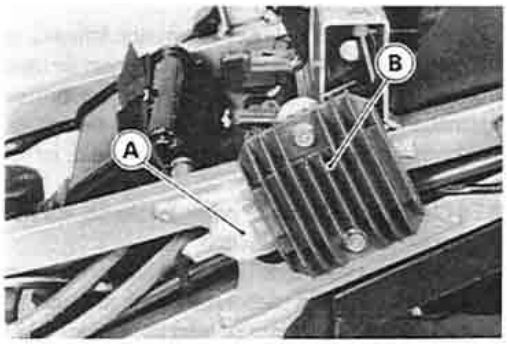

Rectifier Circuit Check:

● Check conductivity of the following pair of terminals.

Rectifier Circuit Inspection

Tester connection	W-Y1,	W-Y2,	W-Y3
	BK/Y-Y1,	BK/Y-Y2,	BK/Y-Y3

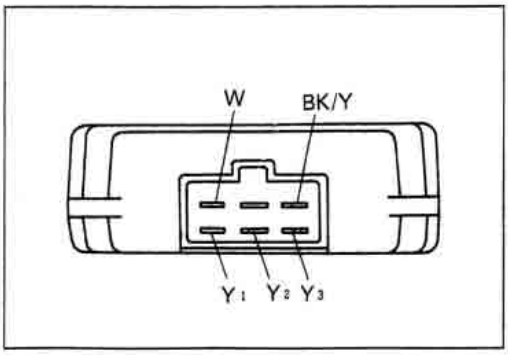

★The resistance should be low in one direction and more than ten times as much in the other direction. If any two leads are low or high in both directions, the rectifier is defective and must be replaced.

NOTE

○ *The actual meter reading varies with the meter used and the individual rectifier, but, generally speaking the lower reading should be from zero to one half the scale.*

Regulator Circuit Check:

To test the regulator out of circuit, use three 12 V batteries and a test light (12 V 3 ~ 6 W bulb in a socket with leads).

CAUTION
The test light works as an indicator and also a current limiter to protect the regulator/rectifier from excessive current. Do not use an ammeter instead of a test light.

● Check to be sure the rectifier circuit is normal before continuing.

Regulator Circuit Test-1st Step:

● Connect the test light and the 12 V battery to the regulator/rectifier as shown.
● Check Y 1, Y2, and Y3 terminal respectively.
★ If the test light turns on, the regulator/rectifier is defective. Replace it.
★ If the test light does not turn on, continue the test.

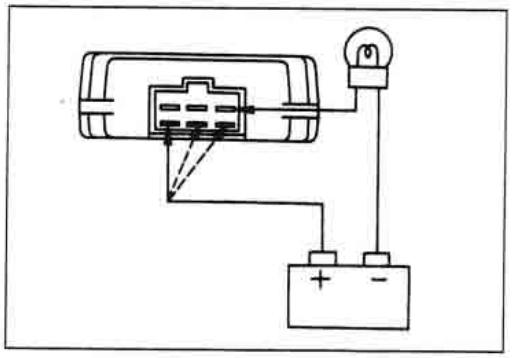

Regulator Circuit Test-2nd Step:

● Connect the test light and the 12 V battery in the same manner as specified in the "Regulator Circuit Test-1st Step".
● Apply 12 V to the voltage detection terminal.
● Check Y 1, Y2, and Y3 terminal respectively.
★ If the test light turns on, the regulator/rectifier is defective. Replace it.
● If the test light does not turn on, continue the test.

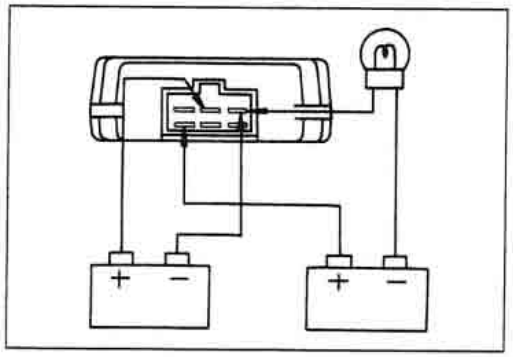

Regulator Circuit Test-3rd Step:

● Connect the test light and the 12 V battery in the same manner as specified in the "Regulator Circuit Test-1st Step".
● Momentarily apply 24 V to the voltage monitoring terminal by adding a 12 V battery.
● Check Y 1, Y2, and Y3 terminals respectively.

CAUTION
Do not apply more than 24 V to the regulator/rectifier and do not leave the 24 V applied for more than a few seconds, or the unit will be damaged.

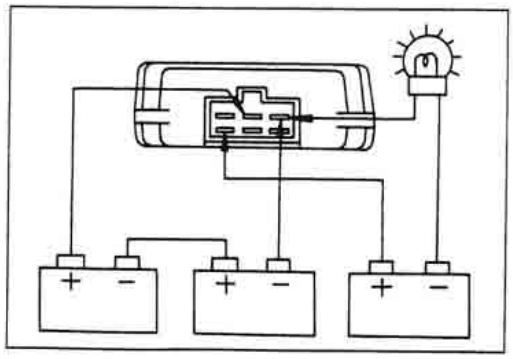

★If the test light did not light when the 24 V was applied momentarily to the voltage monitoring terminal, the regulator/rectifier is defective. Replace it.

★If the regulator/rectifier passes all of the tests described, it may still be defective. If the charging system still does not work properly after checking all of the components and the battery, test the regulator/rectifier by replacing it with a known good unit.

Regulator/Rectifier Output Voltage Inspection

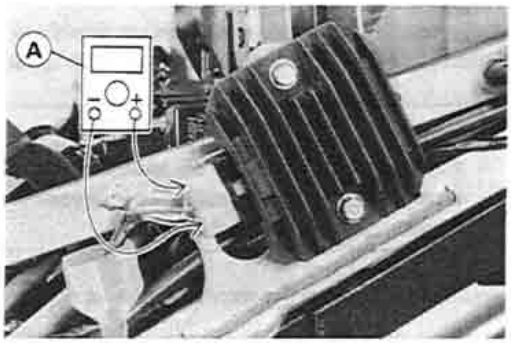

- Check the battery condition (see Battery section).
- Warm up the engine to obtain actual alternator operating conditions.
- Remove the side covers (see Frame chapter).
- Check that the ignition switch is turned off, and connect the hand tester [A] as shown in the table.
- Start the engine, and note the voltage readings at various engine speeds with the headlight turned on and then turned off. (To turn off the headlight of US , Canada and Australia models, disconnect the headlight connector in the upper fairing.) The readings should show nearly battery voltage when the engine speed is low, and, as the engine speed rises, the readings should also rise. But they must be kept under the specified voltage.

Regulator/Rectifier Output Voltage

Tester	Connections		Reading
Range	Tester (+) to	Tester (−) to	
25 V DC	White	Black/Yellow	14 ~ 15 V

- Turn off the ignition switch to stop the engine, and disconnect the hand tester.

★If the regulator/rectifier output voltage is kept between the values given in the table, the charging system is considered to be working normally.

★If the output voltage is much higher than the values specified in the table, the regulator/rectifier is defective or the regulator/rectifier leads are loose or open.

★If the battery voltage does not rise as the engine speed increases, then the regulator/rectifier is defective or the alternator output is insufficient for the loads. Check the alternator and regulator/rectifier to determine which part is defective.

Charging System Circuit

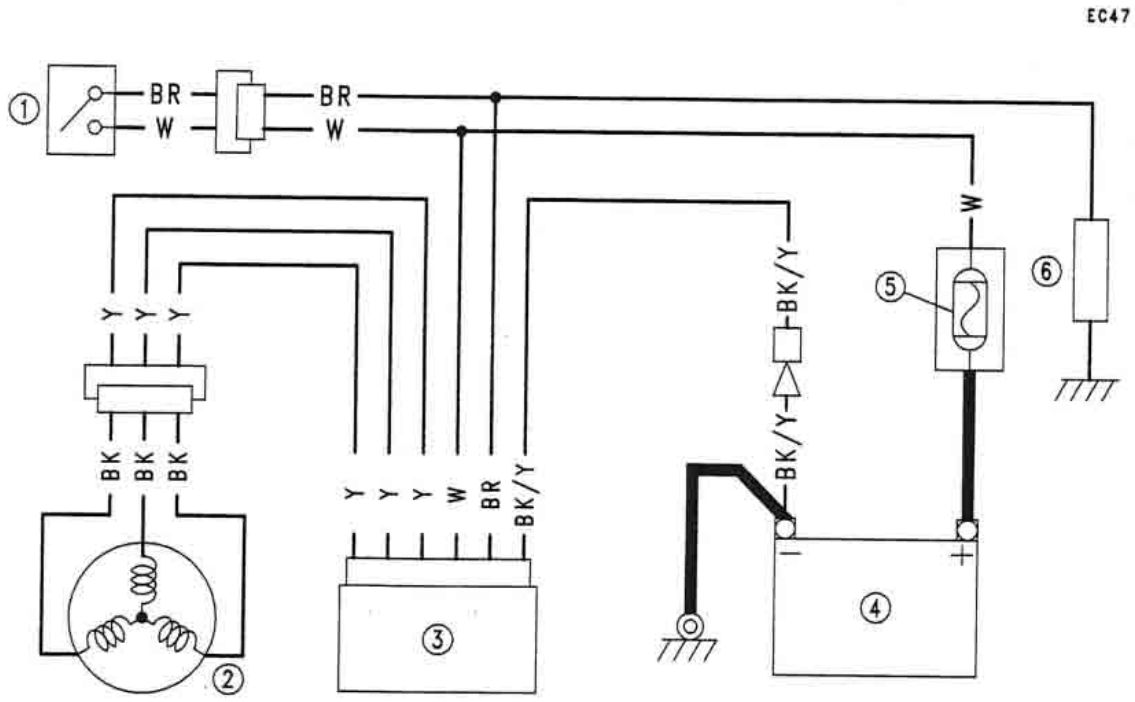

1. Ignition Switch
2. Alternator
3. Regulator/Rectifier
4. Battery
5. Main Fuse 30A
6. Load

⚠WARNING

The ignition system produces extremely high voltage. Do not touch the spark plugs, ignition coils, or spark plug leads while the engine is running, or you could receive a severe electrical shock.

CAUTION

Do not disconnect the battery leads or any other electrical connections when the ignition switch is on, or while the engine is running. This is to prevent IC igniter damage.
Do not install the battery backwards. The negative side is grounded. This is to prevent damage to the diodes and IC igniter.

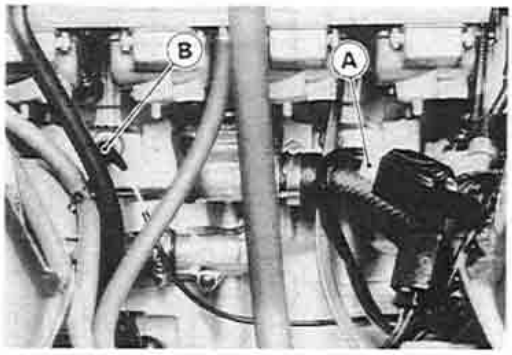

Pickup Coil Removal

- Remove:
  Fuel Tank (see Fuel System chapter)
  Right Lower Fairing (see Frame chapter)
  Pickup Coil Lead Connector [A]
  Water Temperature Sensor Connector [B]

  Pickup Coil Cover
  Oil Pressure Switch Terminal [A]
- Remove the pickup coil [B] by taking off the pickup coil bolts [C].

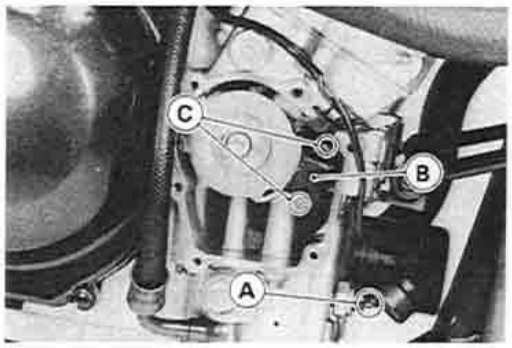

Pickup Coil Installation

- Route the pickup coil lead correctly (see Cable, Wire, and Hose Routing in General/Information chapter).
- Install the pickup coil and tighten the pickup coil bolts.

  Torque – Pickup Coil Bolts: 5.9 N-m (0.60 kg-m, 52 in-lb)

- Apply silicone sealant [A] to the pickup coil lead grommet and crankcase halves mating surface on the front and rear sides of the pickup coil cover mount.

  Sealant – Kawasaki Bond (Silicone Sealant): 56019-120

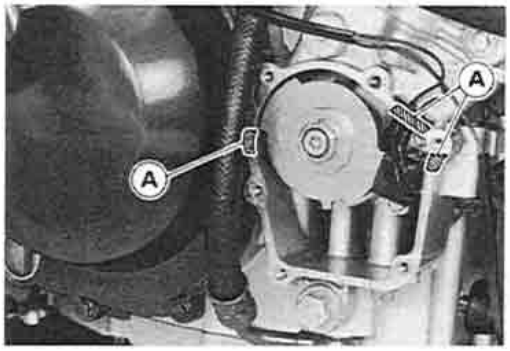

- Apply a non-permanent locking agent to the threads of the pickup coil cover bolt [A].
- Tighten the pickup coil cover bolts.

  Torque – Pickup Coil Cover Bolts: 12 N-m (1.2 kg-m, 104 in-lb)

- Install the water temperature sensor connector and oil pressure switch terminal securely.

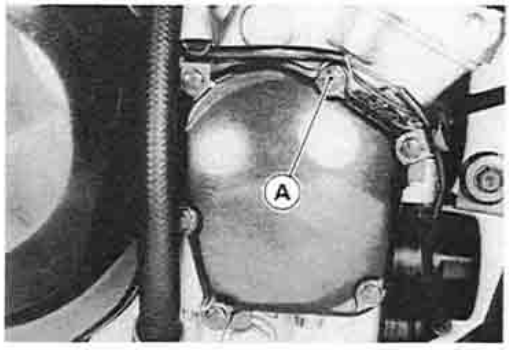

Pickup Coil Inspection

- Remove:
  Fuel Tank (see Fuel System chapter)
  Pickup Coil Lead Connector [A]
- Set the hand tester to the x 100 Ω range and connect it to the BK [B] and BK/Y [C] Leads in the connector.

★If there is more resistance than the specified value, the coil has an open lead and must be replaced. Much less than this resistance means the coil is shorted, and must be replaced.

Pickup Coil Resistance: 380 ~ 570 Ω

- Using the highest resistance range of the tester, measure the resistance between the pickup coil leads and chassis ground.

★Any tester reading less than infinity (∞) indicates a short, necessitating replacement of the pickup coil assembly.

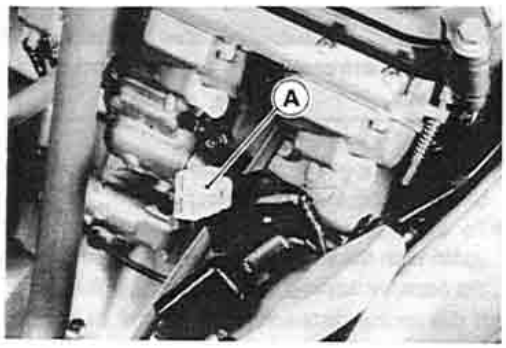

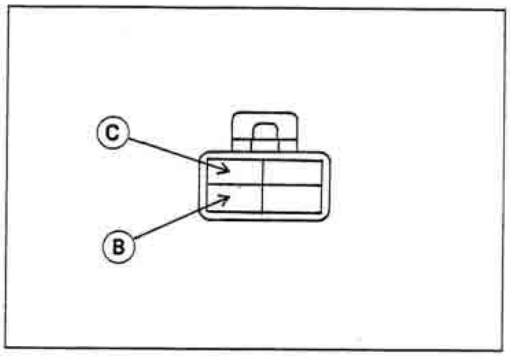

Ignition Coil Removal

- Remove the air cleaner housing (see Fuel System chapter).
- Pull the plug caps off the spark plugs.
- Disconnect the ignition coil primary lead connectors [A].
- Unscrew the mounting bolts [B] and remove the ignition coils [C].

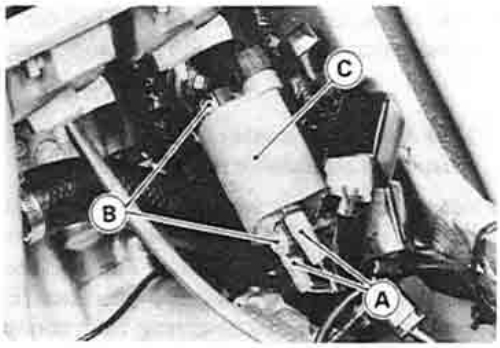

Ignition Coil Installation

○ Connect the primary winding leads to the ignition coil terminals.
  Black Lead → to #1, #4 Coil [A]
  Green Lead → to #2, #3 Coil [B]
  Red Leads → to both Coils

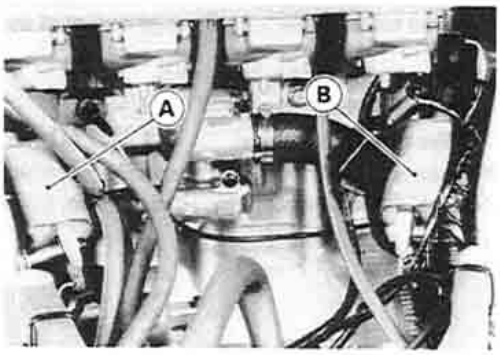

Ignition Coil Inspection

- Remove the ignition coils(see Ignition Coil Removal).
- Measure the arcing distance with the suitable commercially available coil tester [A] to check the condition of the ignition coil [B].
- Connect the ignition coil (with the spark plug cap left attached at the end of the spark plug lead) to the tester in the manner prescribed by the manufacturer and measure the arcing distance.

Ignition Coil Arcing Distance : 6 mm or more

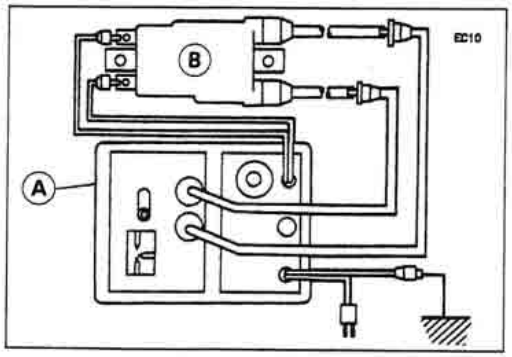

⚠WARNING

To avoid extremely high voltage shocks, do not touch the coil body or leads.

★If the distance reading is less than the specified value, the ignition coil or spark plug caps are defective.

●To determine which part is defective, measure the arcing distance again with the spark plug caps removed from the ignition coil. Remove the caps by turning them counterclockwise.

★If the arcing distance is subnormal as before, the trouble is with the ignition coil itself. If the arcing distance is now normal, the trouble is with the spark plug caps.

★If the coil tester is not available, the coil can be checked for a broken or badly shorted winding with the hand tester.

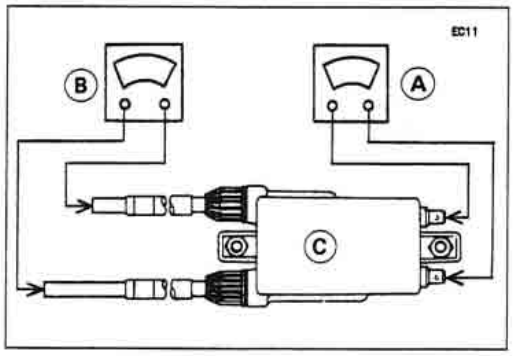

NOTE

○*The hand tester cannot detect layer shorts and shorts resulting from insulation breakdown under high voltage.*

●Measure the primary winding resistance [A] as follows.
○Connect the hand tester between the coil terminals.
○Set the tester to the x 1 Ω range, and read the tester.
●Measure the secondary winding resistance [B] as follows.
○Remove the plug caps by turning them counterclockwise.
○Connect the tester between the spark plug leads.
○Set the tester to the x 1 kΩ range and read the tester.

Ignition Coil Winding Resistance

Primary Windings:	**2.6 ~ 3.2 Ω**
Secondary Windings:	**13 ~ 17 kΩ**

★If the tester does not read as specified, replace the coil.
○To install the plug cap, turn it clockwise.

Spark Plug Removal

●Remove:
Air Cleaner Housing (see Fuel System chapter)
Spark Plug Caps
●Remove the spark plugs using the 16 mm plug wrench.

Owner's Tool – Spark Plug Wrench, 16 mm: 92110-1146

Spark Plug Installation

- Insert the spark plug vertically into the plug hole with the plug [A] installed in the plug wrench [B].

  Owner's Tool – Spark Plug Wrench, 16mm: 92110-1146

- Tighten the plugs.

  Torque – Spark Plugs: 13 N-m (1.3 kg-m, 113 in-lb)

- Fit the plug caps securely.

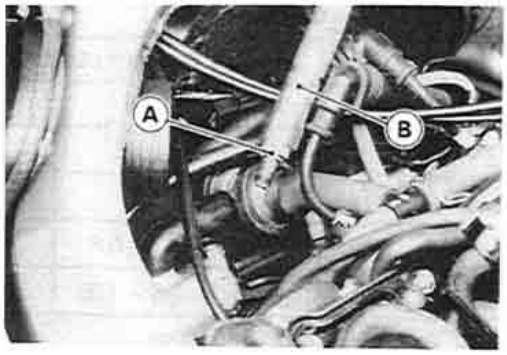

Spark Plug Gap Inspection

- Measure the gap [A] with a wire-type thickness gauge.

★If the gaps are incorrect, carefully bend the side electrode [B] with a suitable tool to obtain the correct gaps.

Spark Plug Gap : 0.7 ~ 0.8 mm

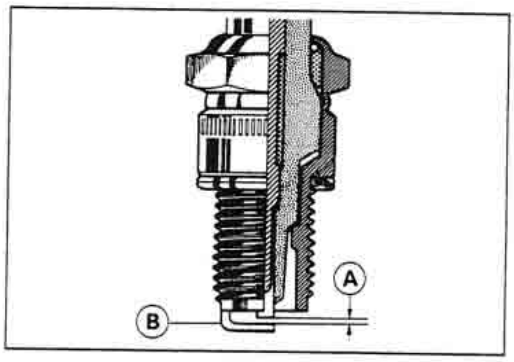

IC Igniter Inspection

CAUTION
When inspecting the IC igniter observe the following to avoid damage to the IC Igniter. **Do not disconnect the IC igniter with the ignition switch on. This may damage the IC igniter.** **Do not disconnect the battery leads while the engine is running. This may damage the IC igniter.**

- Remove the side covers (see Frame chapter).
- Remove the IC igniter [A] and disconnect the connectors.
- Set the hand tester to the x 1 kΩ range and make the measurements shown in the table.

  Special Tool – Hand Tester: 57001-983

★If the tester readings are not as specified, replace the IC igniter.

CAUTION
Use only Hand Tester 57001-983 for this test. A tester other than the Kawasaki Hand Tester may show different readings. **If a megger or a meter with a large-capacity battery is used, the IC igniter will be damaged.**

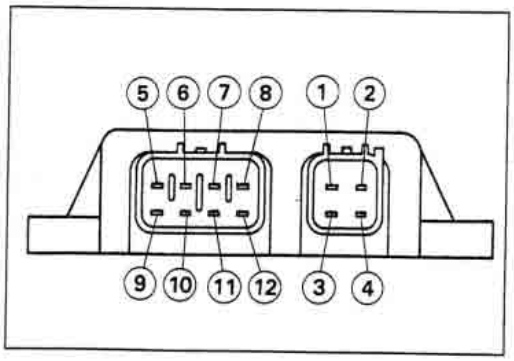

IC Igniter Internal Resistance (4P) **Unit: kΩ**

		Tester (+) Lead Connection			
	Terminal	1	2	3	4
(−)*	1	–	∞	∞	∞
	2	∞	–	0 ~ 0.8	28 ~ 100
	3	∞	0 ~ 0.8	–	28 ~ 100
	4	∞	26 ~ 100	26 ~ 100	–

(−)*: Tester (−) Lead Connection

IC Igniter Internal Resistance (8P) **Unit: kΩ**

		Tester (+) Lead Connection							
	Terminal	5	6	7	8	9	10	11	12
(−)*	5	–	∞	∞	∞	∞	∞	∞	∞
	6	30 ~ 150	–	24 ~ 90	19 ~ 80	30 ~ 150	45 ~ 300	∞	15 ~ 60
	7	6.5 ~ 26	7 ~ 28	–	2 ~ 4.6	6.5 ~ 26	5.5 ~ 22	∞	3.8 ~ 15
	8	3.8 ~ 16	4.4 ~ 18	1.8 ~ 7.5	–	3.8 ~ 16	2.8 ~ 11	∞	1.8 ~ 7.5
	9	∞	∞	∞	∞	–	∞	∞	∞
	10	∞	∞	∞	∞	∞	–	∞	∞
	11	∞	∞	∞	∞	∞	∞	–	∞
	12	1.4 ~ 5.5	1.6 ~ 6.5	2 ~ 8	1.6 ~ 6	1.4 ~ 5.5	5 ~ 20	∞	–

(−)*: Tester (−) Lead Connection

IC Igniter Troubleshooting

1)IC igniter or pickup coil damaged
2)Even if the preceding checks show good, it may be defective in some manner not readily detectable with the hand tester.

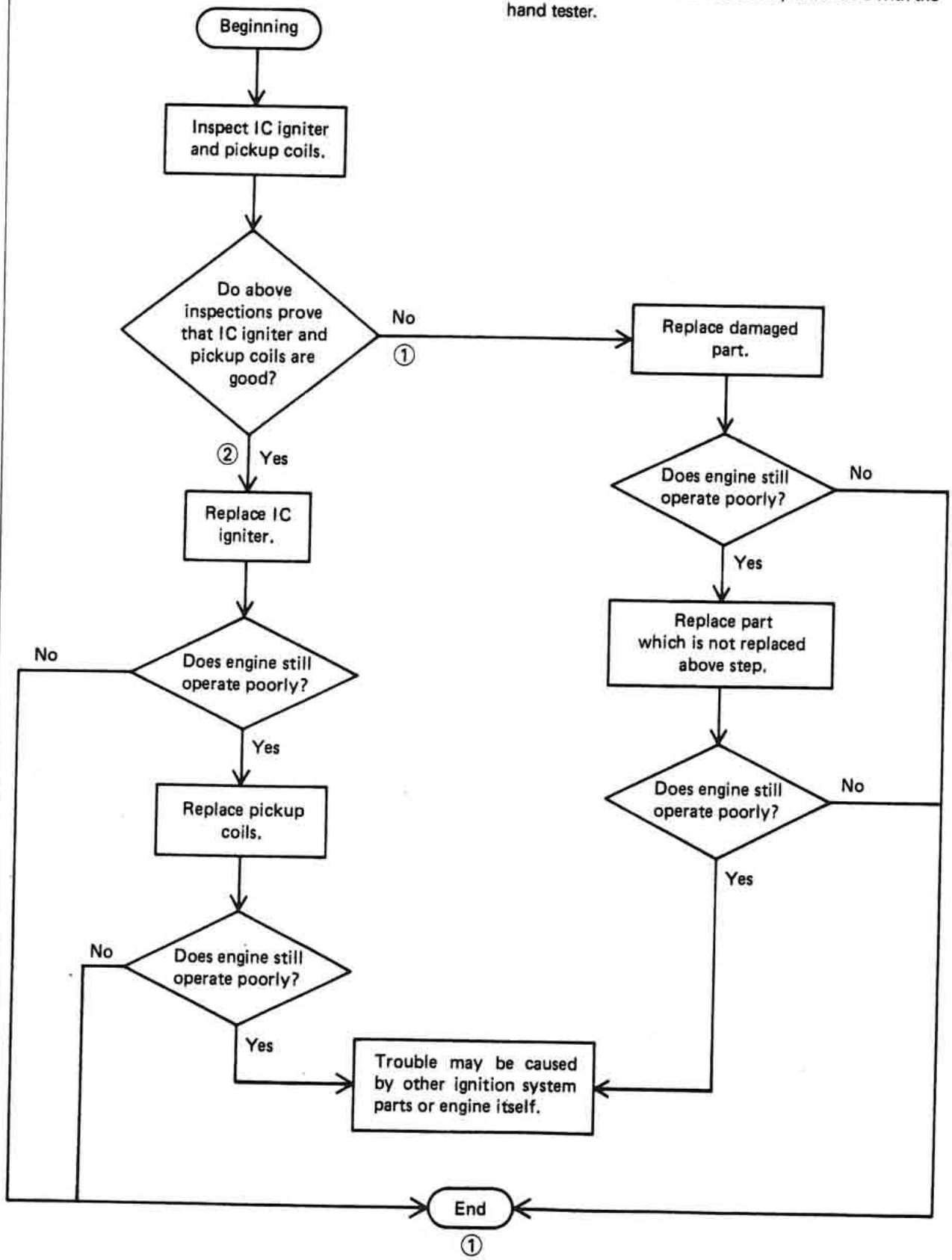

Ignition System Circuit

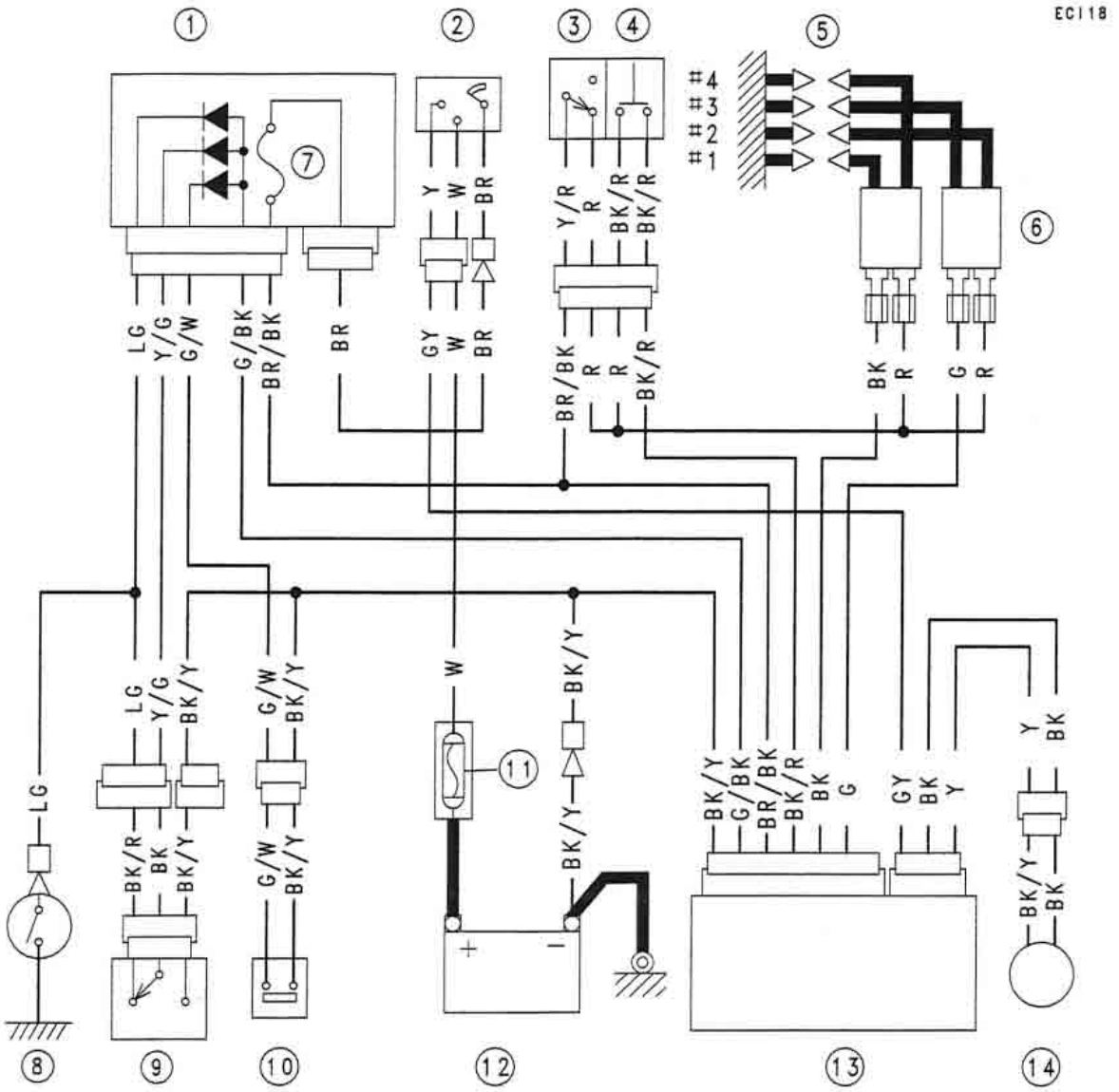

1. Junction Box
2. Ignition Switch
3. Engine Stop Switch
4. Starter Button
5. Spark Plugs
6. Ignition Coils
7. Ignition Fuse 10A
8. Neutral Switch
9. Starter Locknut Switch
10. Side Stand Switch
11. Main fuse 30A
12. Battery
13. IC Igniter
14. Pickup Coil

Electric Starter System

Starter Motor Removal

- Remove the fuel tank (see Fuel System chapter).
- Remove the starter motor terminal nut [A] and the mounting bolts [B].
- Pull out the starter motor [C].

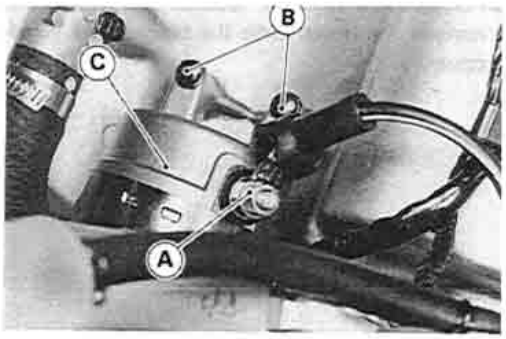

Starter Motor Installation

CAUTION
Do not tap the starter motor shaft or body. Tapping the shaft or body could damage the motor.

- When installing the starter motor, clean the starter motor legs [A] and crankcase [B] where the starter motor is grounded.

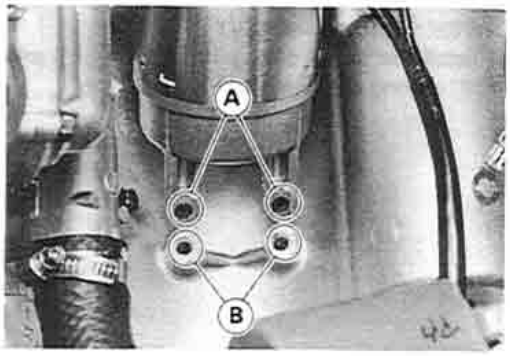

- Apply a small amount of engine oil to the O-ring [A].
- Install the starter motor and tighten the mounting bolts.

Torque – Starter Motor Mounting Bolts: 9.8 N-m (1.0 kg-m, 87 in-lb)

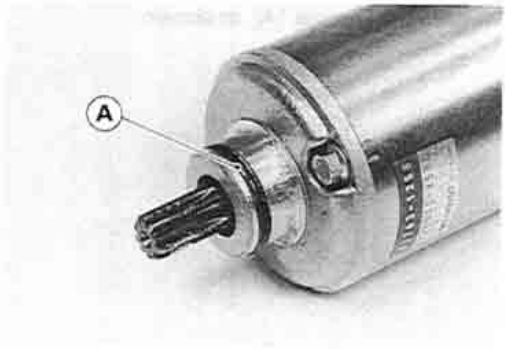

Starter Motor Disassembly

- Take off the starter motor through bolts [A] and remove both end covers [B] and pull the armature out of the yoke [C].

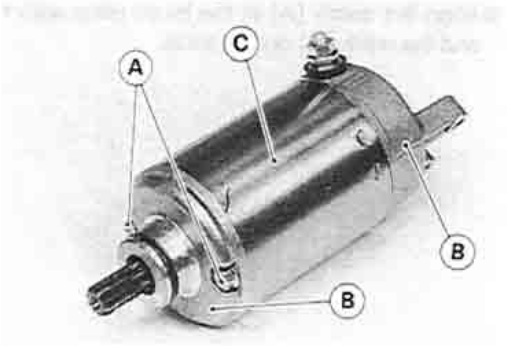

○ The brush plate [A] and brushes come off with the right-hand end cover [B].

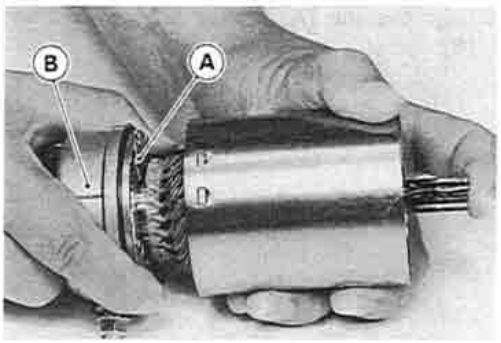

- Remove the terminal locknut [A] and terminal bolt [B], and then remove the brush with the brush plate [C] from the right-hand end cover.

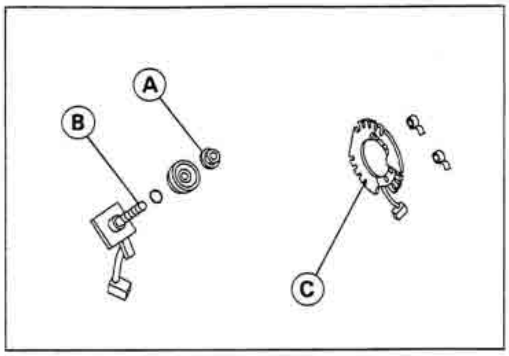

Starter Motor Assembly

- Install the brush plate and brushes [A], and then put the armature [B] among the brushes.

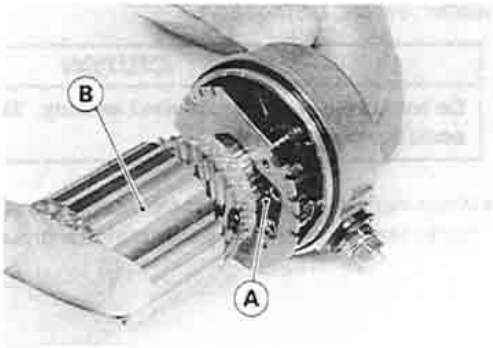

- Install the O-rings [A] as shown.

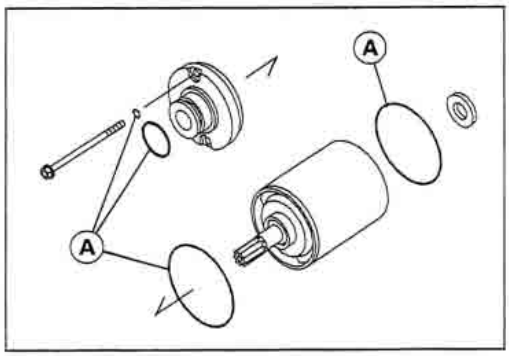

- Align the notch [A] in the brush plate with the end cover notch [B] and the mark [C] on the yoke.

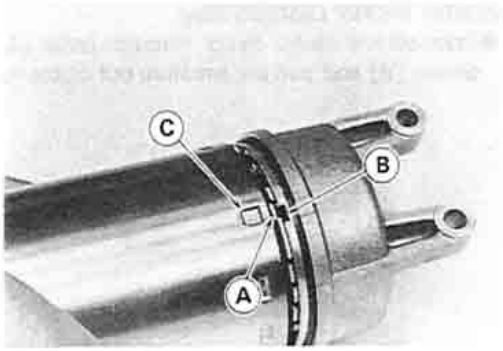

- Align the line [A] marked on the yoke with the through bolt hole [B].

Brush Inspection

- Measure the length [A] of each brush.

★If any is worn down to the service limit, replace the carbon brush holder assembly [B] and the terminal bolt assembly [C].

Starter Motor Brush Length

Standard:	**12 mm**
Service Limit:	**8.5 mm**

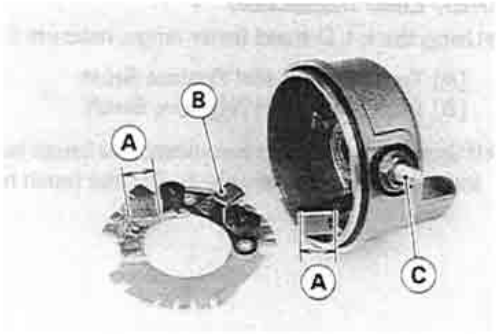

Commutator Cleaning and Inspection

- Smooth the commutator surface [A] if necessary with fine emery cloth [B], and clean out the grooves.

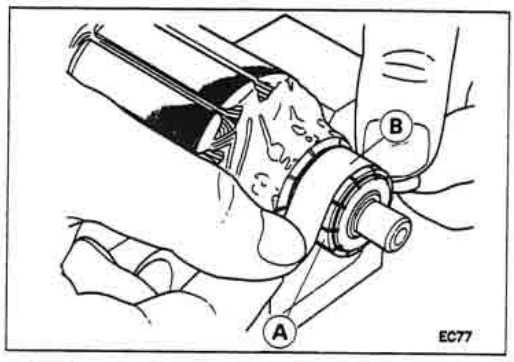

- Measure the diameter [A] of the commutator [B].

★Replace the starter motor with a new one if the commutator diameter is less than the service limit.

Commutator Diameter

Standard:	**28 mm**
Service Limit:	**27 mm**

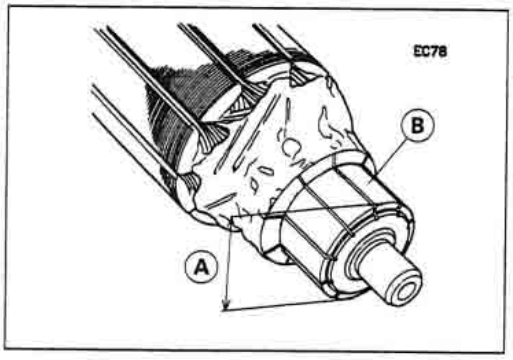

Armature Inspection

- Using the x 1 Ω hand tester range, measure the resistance between any two commutator segments [A].

★If there is a high resistance or no reading (∞) between any two segments, a winding is open and the starter motor must be replaced.

- Using the highest hand tester range, measure the resistance between the segments and the shaft [B].

★If there is any reading at all, the armature has a short and the starter motor must be replaced.

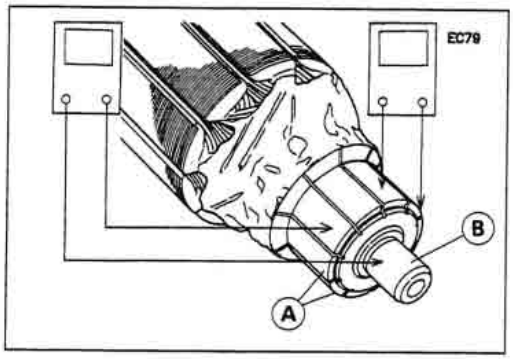

NOTE

○*Even if the foregoing checks show the armature to be good, it may be defective in some manner not readily detectable with the hand tester. If all other starter motor and starter motor circuit components check good, but the starter motor still does not turn over or only turns over weakly, replace the starter motor with a new one.*

Brush Lead Inspection

- Using the x 1 Ω hand tester range, measure the resistance as shown.

  [A] Terminal Bolt and Positive Brush
  [B] Brush Plate and Negative Brush

★If there is not close to zero ohms, the brush lead has an open. Replace the terminal bolt assembly and/or the brush holder assembly.

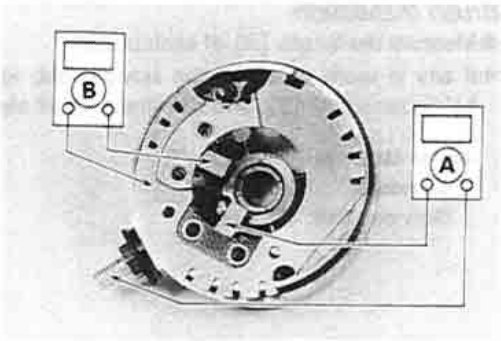

Brush Plate and Terminal Bolt Inspection

- Using the highest hand tester range, measure the resistance as shown.

  [A] Terminal Bolt and Brush Plate
  [B] Terminal Bolt and Right-hand End Cover

★If there is any reading, the brush holder assembly and/or terminal bolt assembly have a short. Replace the brush holder assembly and the terminal bolt assembly.

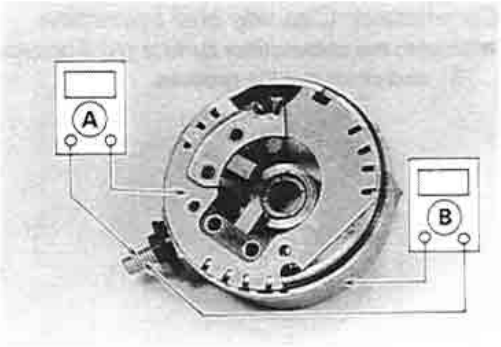

Starter Relay Inspection

- Remove the seats.
- Remove the starter relay.
- Connect the hand tester [A] and 12 V battery [B] to the starter relay [C] as shown.

★If the relay does not work as specified, the relay is defective. Replace the relay.

Testing Relay

Tester Range: x 1 Ω range

Criteria: When battery is connected → 0 Ω
When battery is disconnected → ∞ Ω

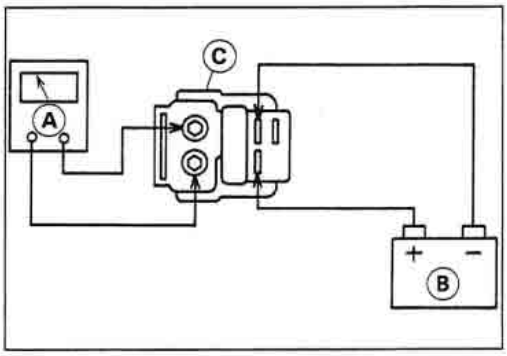

Electric Starter Circuit

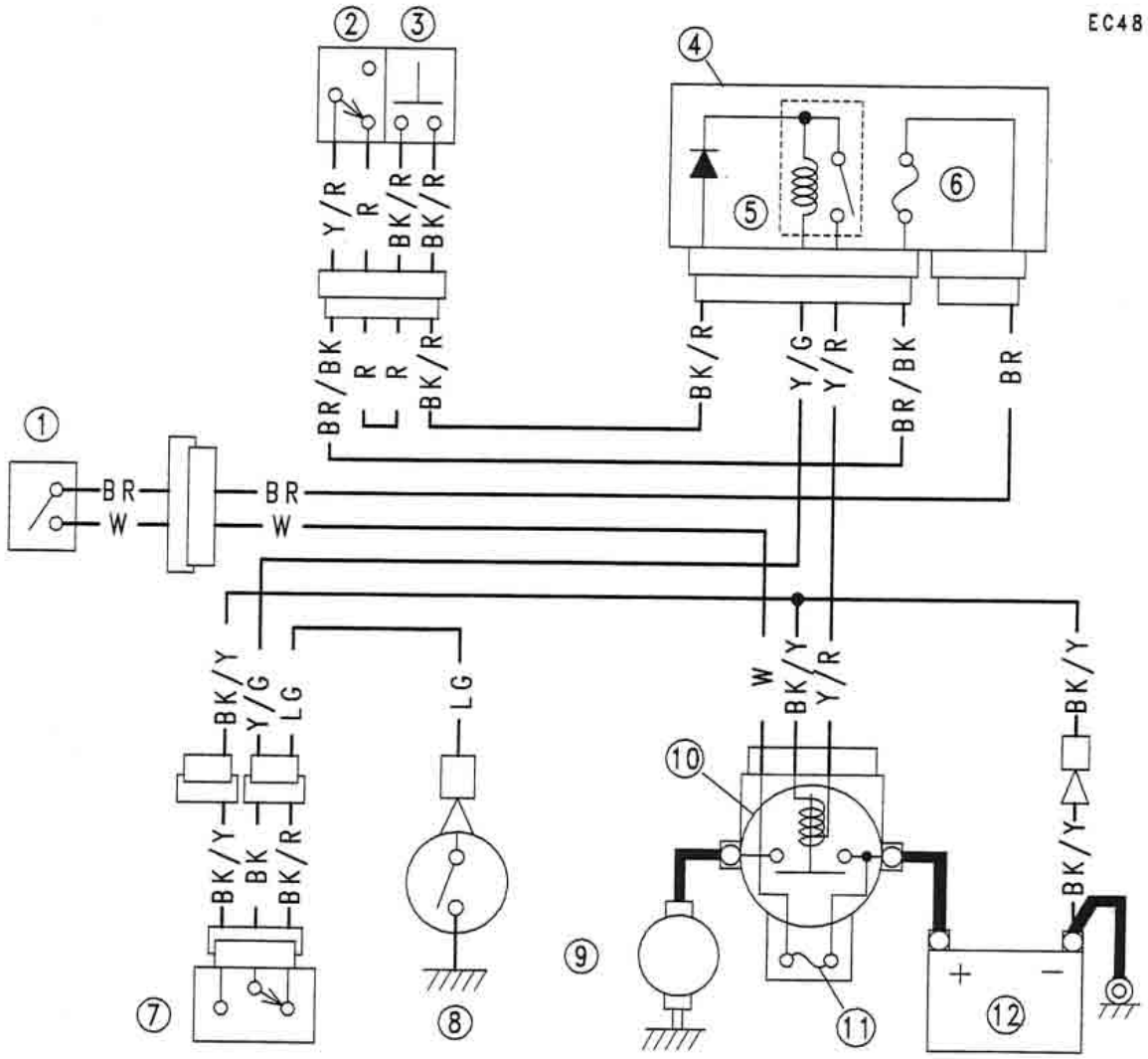

1. Ignition Switch
2. Engine Stop Switch
3. Starter Button
4. Junction Box
5. Starter Circuit Relay
6. Ignition Fuse 10A
7. Starter Lockout Switch
8. Neutral Switch
9. Starter Motor
10. Starter Relay
11. Main Fuse 30A
12. Battery

Lighting System

The US, Canada, and Australia models adopt the daylight system and have a headlight relay in the junction box. In these models, the headlight does not go on when the ignition switch and the engine stop switch are first turned on. The headlight comes on after the starter button is released and stays on until the ignition switch is turned off. The headlight will go out momentarily whenever the starter button is pressed and come back on when the button is released.

Headlight Beam Horizontal Adjustment

- Turn the horizontal adjuster [A] on the headlight in or out until the beam points straight ahead.

Headlight Beam Vertical Adjustment

- Turn the vertical adjuster [B] on the headlight in or out to adjust the headlight vertically.

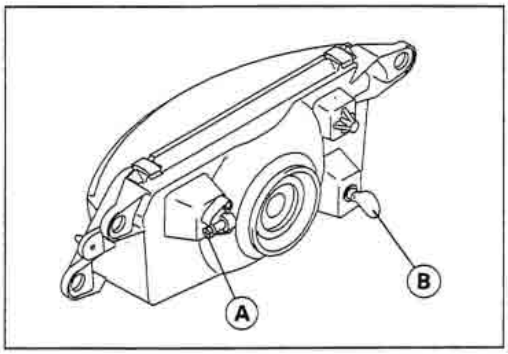

NOTE

- *On high beam, the brightest points should be slightly below horizontal with the motorcycle on its wheels and the rider seated. Adjust the headlight(s) to the proper angle according to local regulations.*
- *For US model, the proper angle is 0.4 degrees below horizontal. This is 50 mm (2 in) drop at 7.6 m (25 ft) measured from the center of the headlights with the motorcycle on its wheels and the rider seated.*

50 mm (2 in) [A]
Center of Brightest Spot [B]
7.6 m (25 ft) [C]
Height of Headlight Center [D]

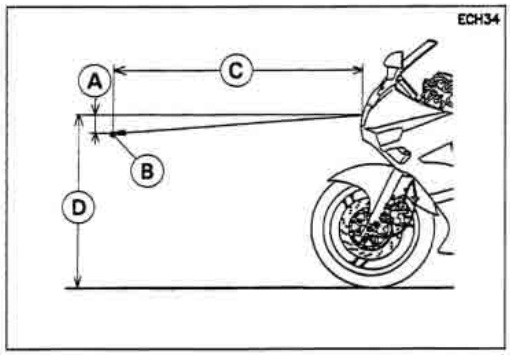

Headlight Bulb Replacement

- Remove:
  Headlight Connector
  Headlight Bulb Dust Cover [A]
  Hook [B]

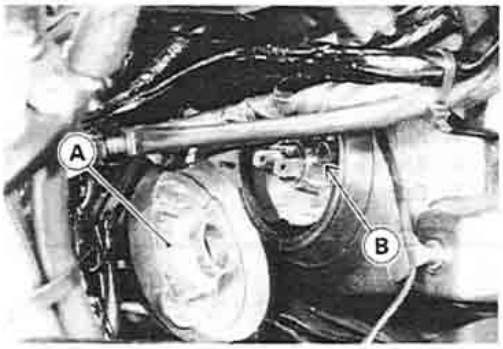

CAUTION
When handling the quartz-halogen bulb, never touch the glass portion with bare hands. Always use a clean cloth. Oil contamination from hands or dirty rags can reduce bulb life or cause the bulb to explode.

- Replace the headlight bulb.
- Fit the dust cover [A] with the Top mark [B] upward onto the bulb [C] firmly as shown.
- After installation, adjust the headlight aim (see this chapter).

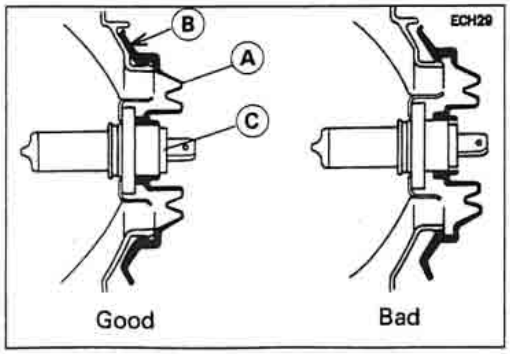

Headlight Circuit (U.S., Canada, and Australia)

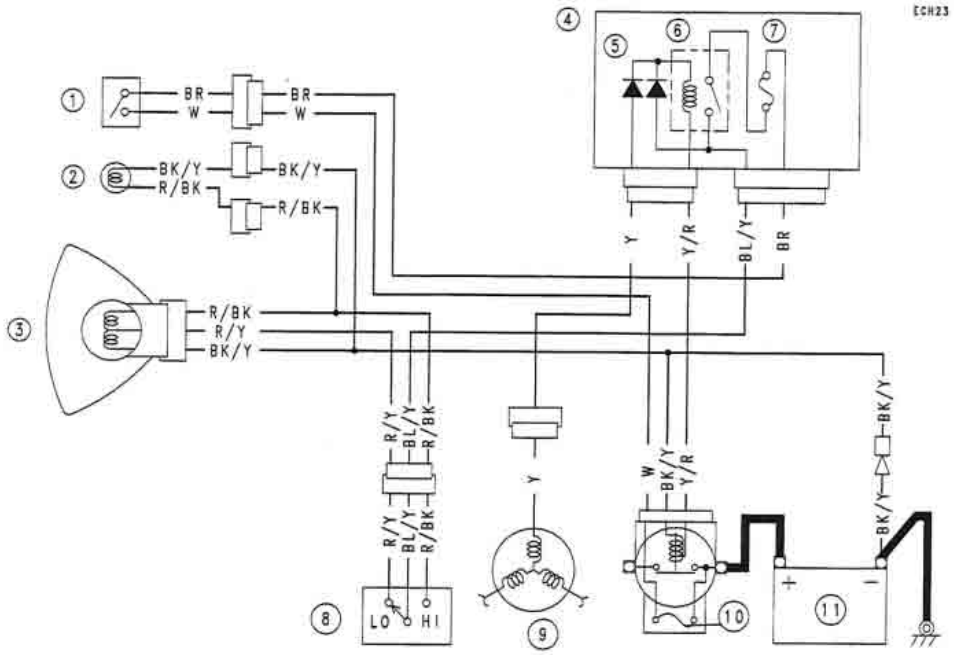

Headlight Circuit (Other than U.S., Canada, and Australia)

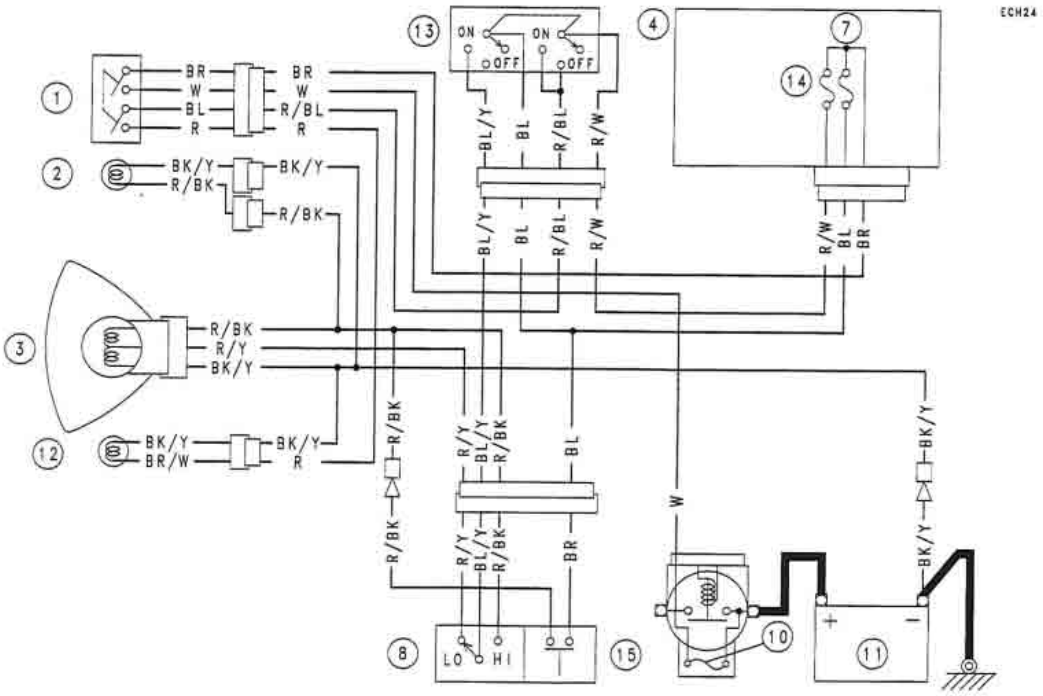

1. Ignition Switch
2. High Bearm Indicator Light
3. Headlight
4. Junction Box
5. Diodes
6. Headlight Circuit Relay
7. Headlight Fuse 10A
8. Dimemr Switch
9. Alternator
10. Main Fuse 30A
11. Battery
12. City Light
13. Headlight Switch
14. Taillight Fuse 10A
15. Passing Button

Turn Signal Light Circuit

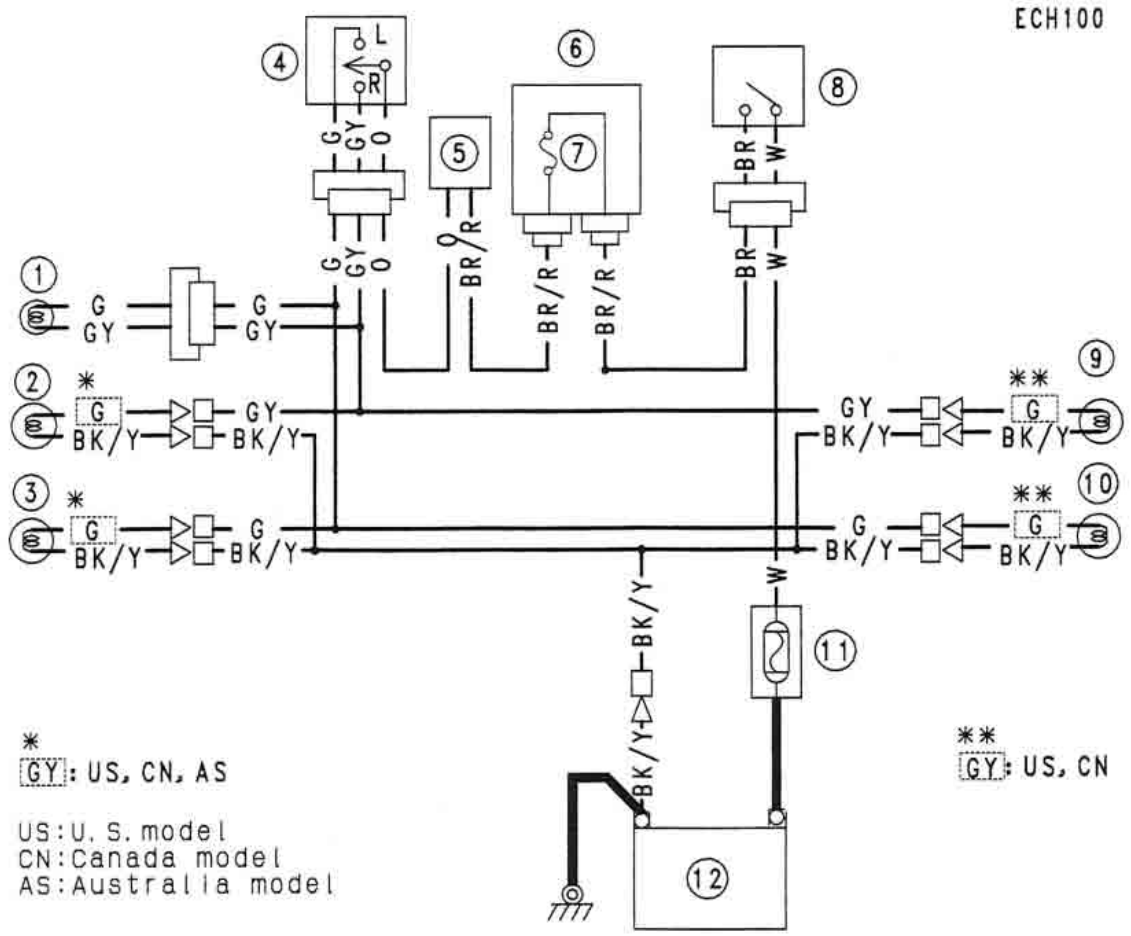

1. Turn Signal Indicator Light
2. Front Right Turn Signal Light
3. Front Left Turn Signal Light
4. Turn Signal Switch
5. Turn Signal Relay.
6. Junction Box
7. Turn Signal Relay Fuse 10A
8. Ignition Switch
9. Rear Right Turn Signal Light
10. Rear Left Turn Signal Light
11. Main Fuse 30A
12. Battery

Turn Signal Relay Inspection

- Remove:
  Seats (see Frame chapter)
  Turn Signal Relay [A]

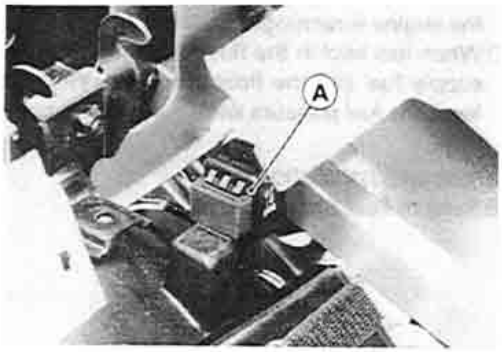

- Connect one 12 V battery and turn signal lights as indicated in the figure, and count how may times the lights flash for one minute.

  Turn Signal Relay [A]
  Turn Signal Lights [B]
  12 V Battery [C]

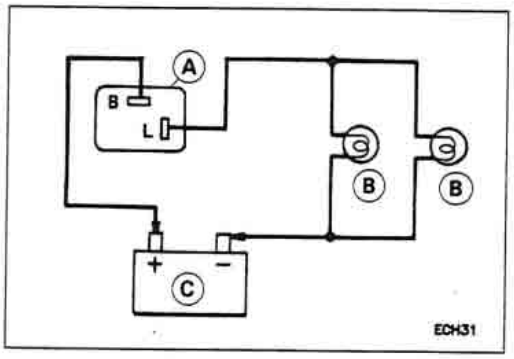

★If the lights do not flash as specified, replace the turn signal relay.

Testing Turn Signal Relay

Load		Flashing times (c/m*)
The Number of Turn Signal Lights	Wattage(W)	
1	21	Light stays on
2	42	75 – 95

(*): Cycle(s) per minute

Fuel Pump

○The fuel pump [A] operates when the starter button is pushed on or the engine is running.
○When fuel level in the float chamber is low, the fuel pump operates to supply fuel into the float chamber. When the fuel reaches a certain level, the fuel pressure rises, and the fuel pump stops.

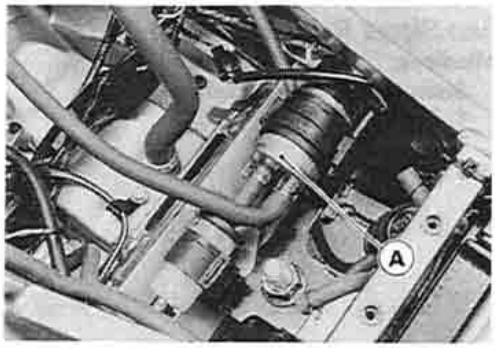

Removal/Installation

●Refer to Fuel System chapter.

Fuel Pump Relay Inspection

●Remove the seats (see Frame chapter).
●Take off the fuel pump relay [A].
●Set the hand tester to the x 1 kΩ range and make the measurements shown in the table.

Special Tool – Hand Tester: 57001-983

★If the tester readings are not as specified, replace the fuel pump relay.
★If the tester readings are normal, check the fuel pump operation.

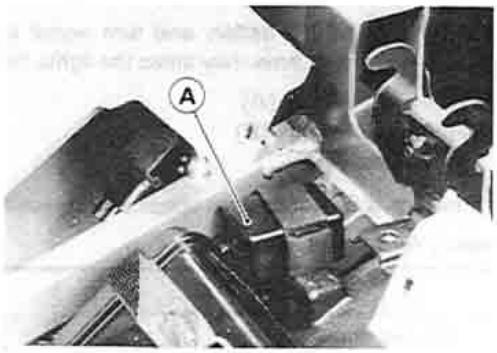

CAUTION
Use only Hand Tester 57001-983 for this test. An ohmmeter other than the Kawasaki Hand Tester may show different readings. If a megger or a meter with a large-capacity battery is used, the pump relay will be damaged.

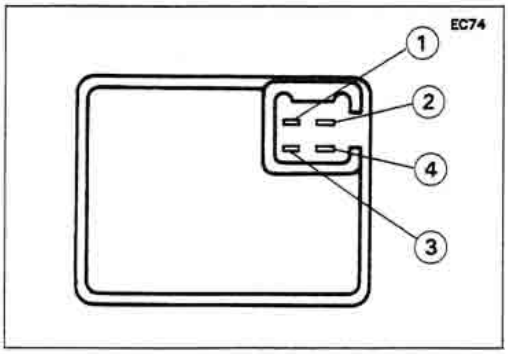

Fuel Pump Relay Internal Resistance

Range		Tester (+) Lead Connection			
x 1 kΩ		1	2	3	4
*	1	–	∞	∞	∞
(–)	2	∞	–	∞	∞
	3	∞	10 ~ 100	–	∞
	4	∞	20 ~ 200	1 ~ 5	–

(–)* : Tester (–) Lead Connection

Fuel Pump Operational Inspection

●Remove the fuel pump with the fuel filter (see Fuel System chapter).
●Prepare a container filled with kerosene.
●Prepare the rubber hoses, and connect them to the pump fittings.
●Connect a suitable pressure gauge to the outlet hose as shown.

Fuel Pump [A]
Pressure Gauge [B]
Outlet Hose [C]
Inlet Hose [D]
Fuel Filter [E]
Kerosene [F]
2-Pin Connector [G]
Battery [H]
Auxiliary Leads [I]

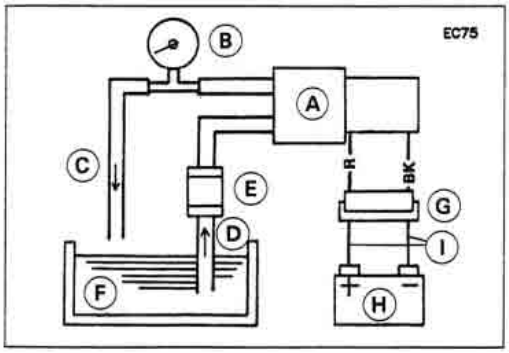

- Connect the pump leads to the battery using auxiliary wires as shown.
- ★If the pump operates, check the pump relay.
- ★If the pump does not operate, the pump is defective.
- ★If the pump operates and the pump relay is normal, close the outlet hose while operating the fuel pump.
- When the pump stops, read the pressure gauge.
- ★If the pressure gauge reading is out of the specified pressure, the pump is defective.

Fuel Pump Pressure

Standard : 11 ~ 16 kPa
(0.11 ~ 0.16 kg/cm², 1.6 ~ 2.3 psi)

Fuel Pump Circuit

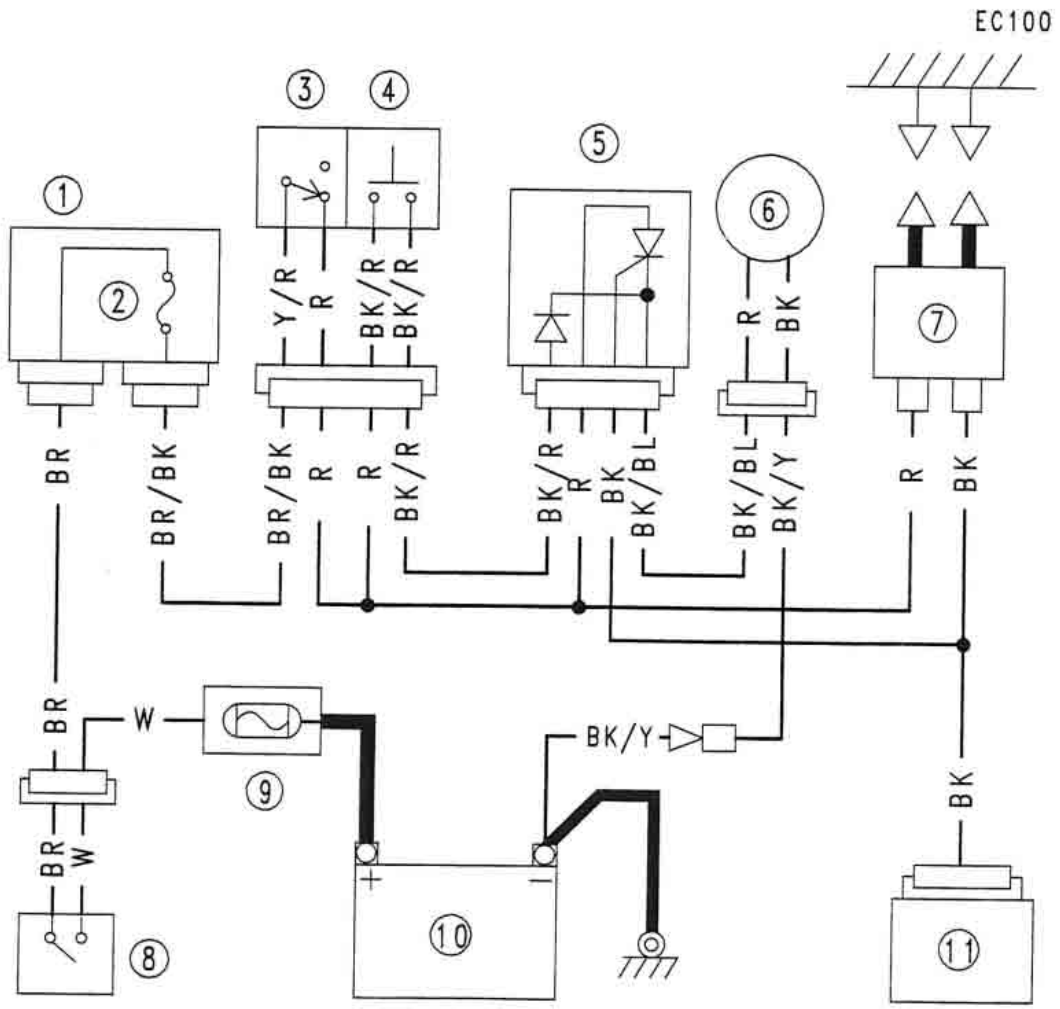

1. Junction Box
2. Ignition Fuse 10A
3. Engine Stop Switch
4. Starter Button
5. Fuel Pump Relay
6. Fuel Pump
7. Ignition Coil
8. Ignition Switch
9. Main Fuse 30A
10. Battery
11. IC Igniter

Radiator Fan System

Fan System Circuit Inspection

- Disconnect the leads from the radiator fan switch [A].
- Using an auxiliary wire [B], connect the radiator fan switch leads.

★If the fan rotates, inspect the fan switch.

★If the fan does not rotate, inspect the following.
  Leads and Connectors
  Main Fuse and Fan Fuse
  Fan Motor

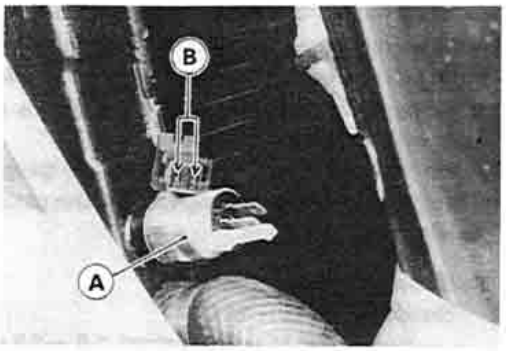

Fan Motor Inspection

- Remove the air cleaner housing (see Fuel System chapter).
- Disconnect the 2-pin connector [A] in the fan motor leads.
- Using two auxiliary wires, supply battery [B] power to the fan motor.

★If the fan does not rotate, the fan motor is defective and must be replaced.

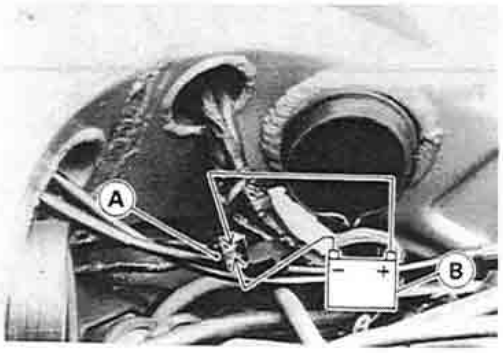

Radiator Fan Circuit

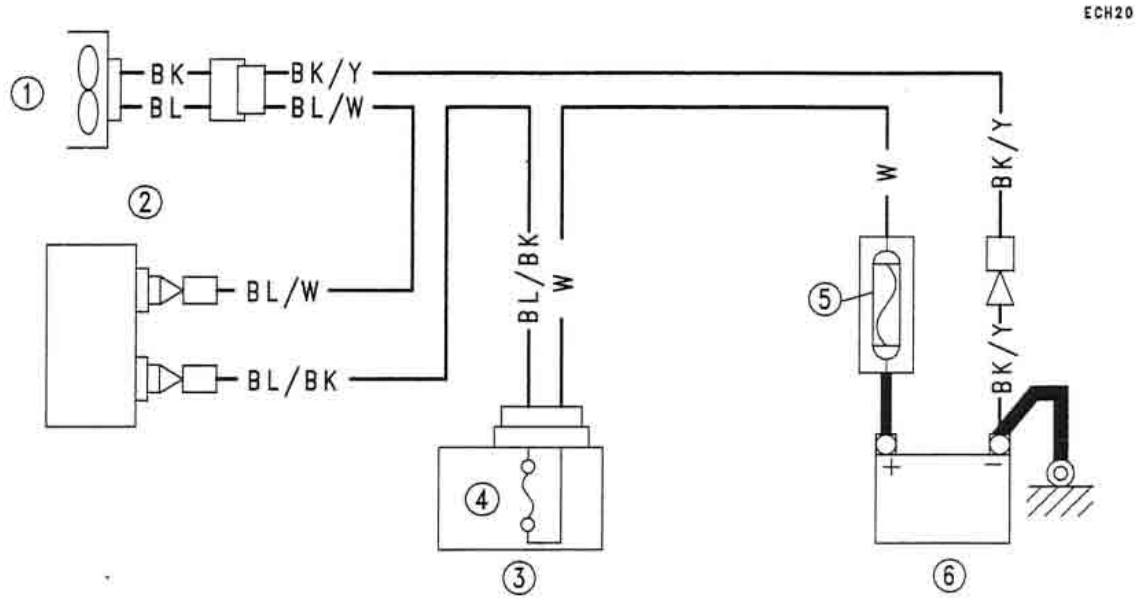

1. Radiator Fan
2. Radiator Fan Switch
3. Junction Box
4. Fan Fuse 10A
5. Main Fuse 30A
6. Battery

Meters, Gauge

Meters, Gauge Removal

- Remove:
  Upper Fairing (see Frame chapter)
  Speedometer Cable Upper End [A]
  Wiring Connectors
- Remove the meter unit by taking off the mounting nuts [B].

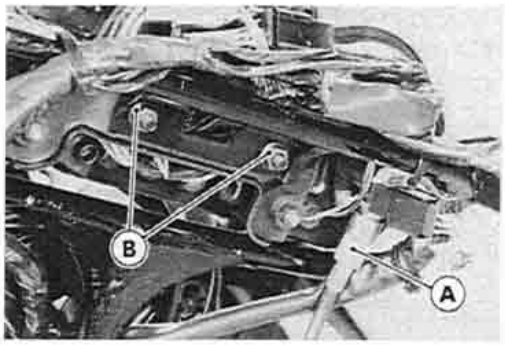

CAUTION
Place the meter or gauge so that the face is up. If a meter or gauge is left upside down or sideways for any length of time, it will malfunction.

Meter, Gauge Disassembly

- Remove:
  Meter Unit (see Meters, Gauge Removal)
  Nuts [A] and Bracket [B]

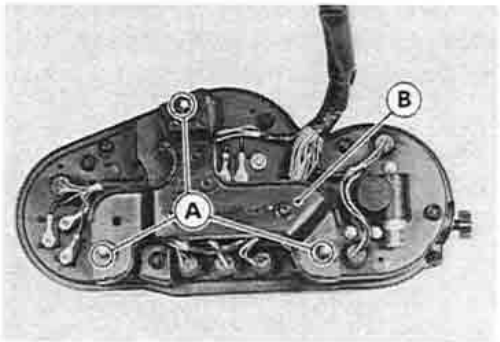

- Unscrew the reset knob screw [A].
- Take off the cover [B] by removing the screws [C].

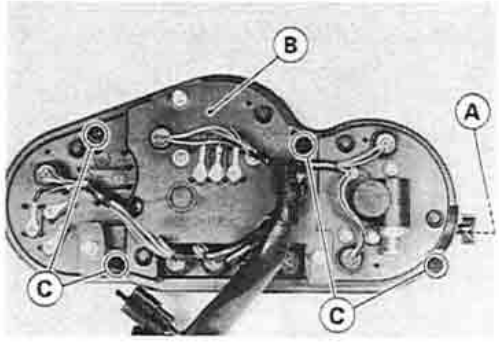

- Remove the screws [A] and bolts [B] for removal of each unit.
  Water Temperature Gauge [C]
  Tachometer [D]
  Speedometer [E]

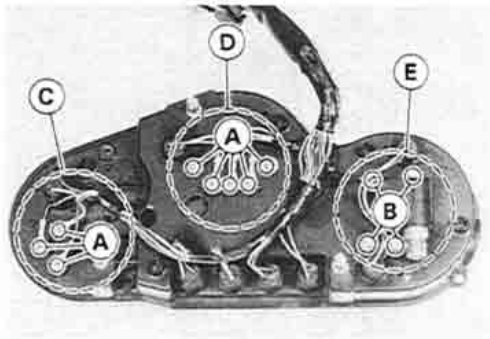

Bulb Replacement

- To remove the wedge-base type bulb [A], pull the bulb out of the socket [B].

CAUTION
Do not turn the bulb. Pull the bulb out to prevent damage to the bulb. Do not use bulb rated for greater wattage than the specified value.

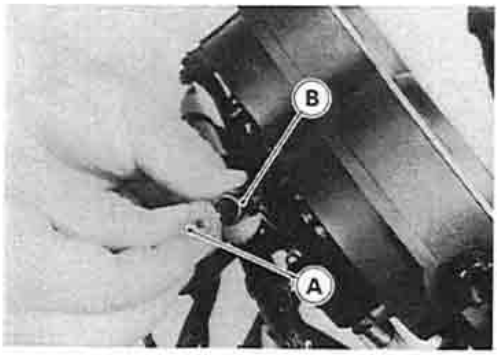

Tachometer Inspection

- ● Check the tachometer circuit wiring (see Wiring Inspection).
- ★ If all wiring and components other than the tachometer unit check out good, the unit is suspect. Check the unit as shown.
- ○ Remove the upper fairing (see Frame chapter).
- ○ Remove the BK lead and then tighten the terminal screw [A] again.
- ○ Turn the ignition switch ON.
- ○ Using an auxiliary wire [B], open and connect the BR lead terminal [C] to the BK lead terminal [A] repeatedly.

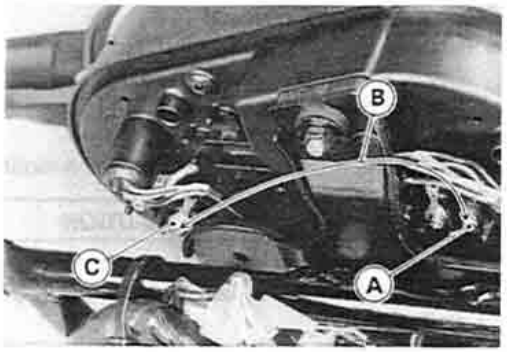

- ○ Then the tachometer hand [A] should flick [B].
- ○ Turn the ignition switch OFF.
- ★ If the hand does not flick, replace the tachometer unit.

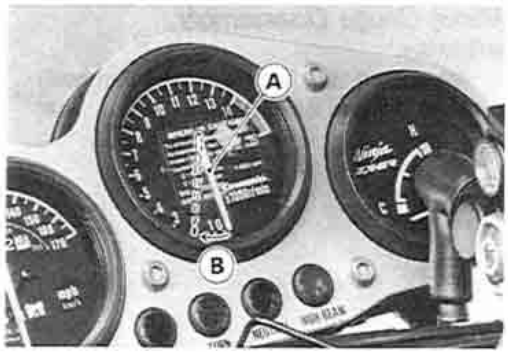

Tachometer Circuit

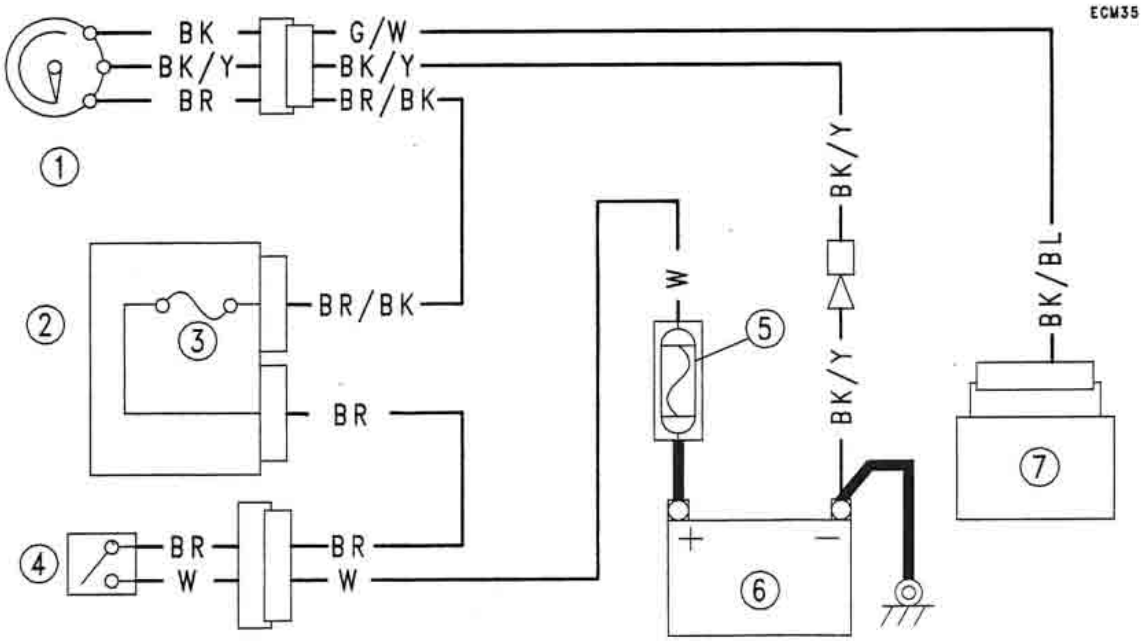

1. Tachometer
2. Junction Box
3. Ignition Fuse 10A
4. Ignition Switch
5. Main Fuse 30A
6. Battery
7. IC Igniter

Water Temperature Gauge Inspection

- Remove the fuel tank (see Fuel System chapter).
- Prepare an auxiliary wire, and check the operation of the water temperature gauge [A].

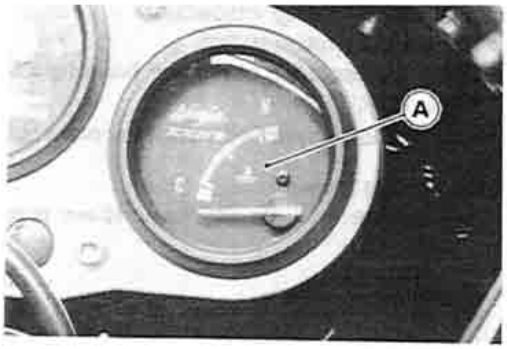

Gauge Operation Test

Ignition Switch Position: ON

Wire Location: Water temperature sensor female connector (disconnected)

Results: Gauge should read C when sensor lead [A] is opened
Gauge should read H when sensor lead is grounded to engine.

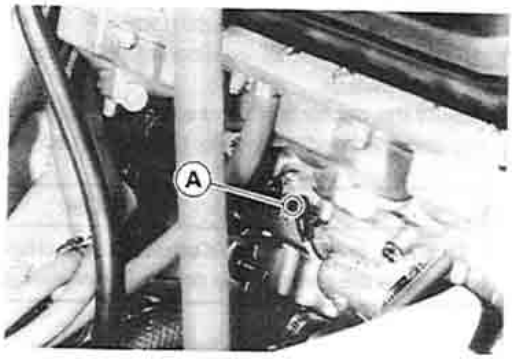

CAUTION
Do not ground the wiring longer than necessary. After the hand swings to the H position, stop the test. Otherwise the gauge could be damaged.

★If these readings are not correct, the trouble is with the gauge and/or wiring.

- Check the water temperature gauge circuit wiring (see Wiring Inspection).
- If all wiring and components other than the water temperature gauge unit check out good, the gauge is defective.

Water Temperature Gauge Circuit

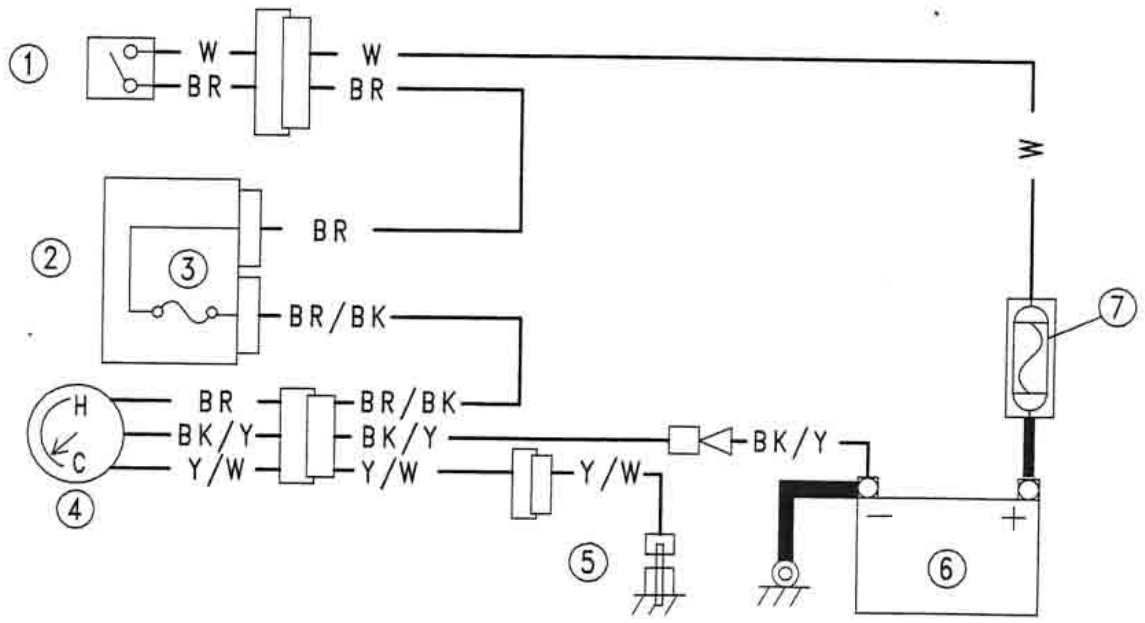

1. Ignition Switch
2. Junction Box
3. Ignition Fuse 10A
4. Water Temperature Gauge
5. Water Temperature Sensor
6. Battery
7. Main Fuse 30A

Switches and Sensors

Brake Light Timing Inspection

- Turn on the ignition switch.
- Check the operation of the rear brake light switch by depressing the brake pedal.

★if it does not as specified, adjust the brake light timing.

Brake Light Timing
Standard: **On after about 10 mm of pedal travel [A]**

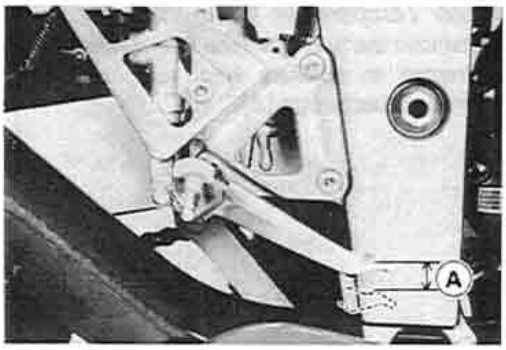

Brake Light Timing Adjustment

Brake light timing is adjusted by changing the position of the rear brake light switch.

- Adjust the position of the switch so that the brake light goes on after the specified pedal travel by turning the adjusting nut [A].

CAUTION
To avoid damaging the electrical connections inside the switch, be sure that the switch body does not turn during adjustment.

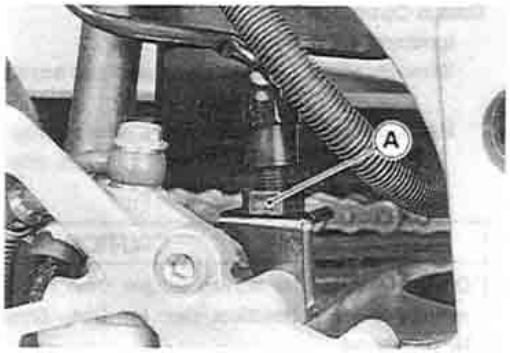

Switch Inspection

- Using a hand tester, check to see that only the connections shown in the table have continuity (about zero ohms).

○ For the handlebar switches and the ignition switch, refer to the tables in the Wiring Diagram.

★If the switch has an open or short, repair it or replace it with a new one.

Special Tool – Hand Tester: 57001-983

Rear Brake Light Switch Connections

	BR	BL
When brake pedal is pushed down	○	○
When brake pedal is released		

Side Stand Switch Connections

	G/W	BK/Y
When side stand is up	○	○
When side stand is down		

Neutral Switch Connections

	SW. Terminal	⏚
When transmission is in neutral	○	○
When transmission is not in neutral		

Oil Pressure Switch Connections*

	SW. Terminal	⏚
When engine is stopped	○	○
When engine is running		

*: Engine lubrication system is in good condition

Radiator Fan Switch Inspection

- Remove the fan switch (see Cooling System chapter).
- Suspend the switch [A] in a container of coolant so that the temperature-sensing projection and threaded portion are submerged.
- Suspend an accurate thermometer [B] in the coolant.

NOTE

○ *The switch and thermometer must not touch the container sides or bottom.*

- Place the container over a source of heat and gradually raise the temperature of the coolant while stirring the coolant gently.
- Using the hand tester, measure the internal resistance of the switch across the terminals at the temperatures shown in the table.

★If the hand tester does not show the specified values, replace the switch.

Fan Switch Resistance

○Rising temperature:

From OFF to ON at 93 ~ 103°C (199 ~ 217°F)

○Falling temperature:

From ON to OFF at above 91°C (196°F)

ON: Less than 0.5 Ω

OFF: More than 1 MΩ

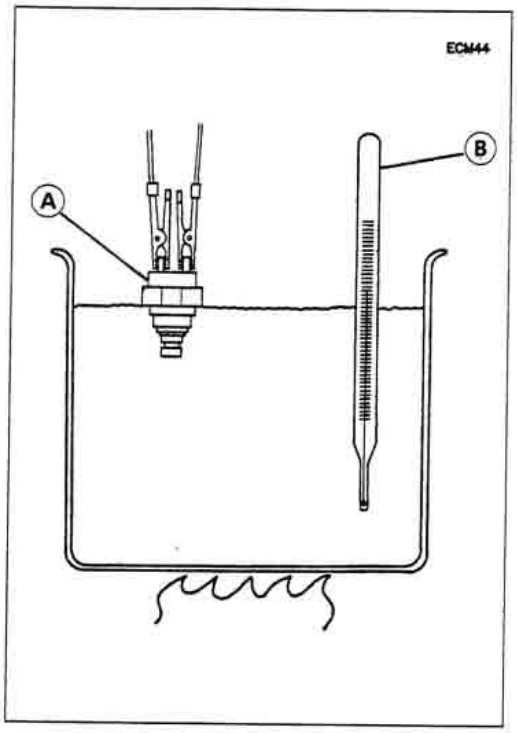

Water Temperature Sensor Inspection

- Remove the water temperature sensor (see Cooling System chapter).
- Suspend the sensor [A] in a container of coolant so that the temperature-sensing projection and threaded portion are submerged.
- Suspend an accurate thermometer [B] in the coolant.

NOTE

○ *The sensor and thermometer must not touch the container side or bottom.*

- Place the container over a source of heat and gradually raise the temperature of the coolant while stirring the coolant gently.
- Using the hand tester, measure the internal resistance of the sensor across the terminal and the body at the temperatures shown in the table.

★If the hand tester does not show the specified values, replace the sensor.

Water Temperature Sensor

80°C (176°F): 47 ~ 57 Ω

100°C (212°F): 25 ~ 30 Ω

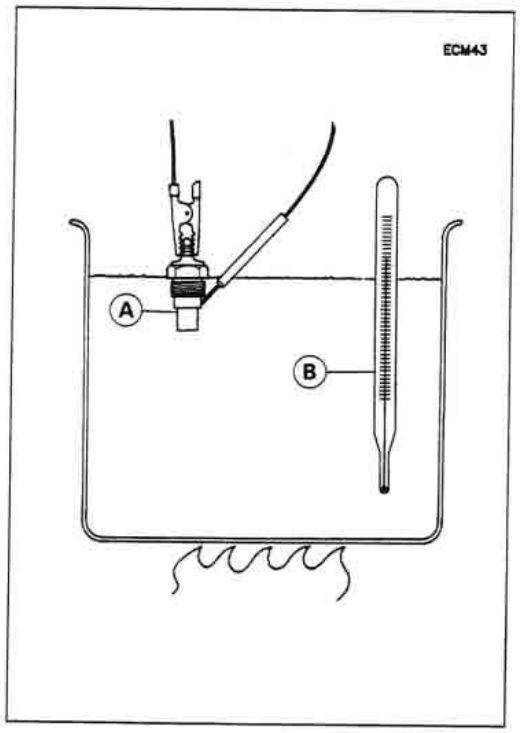

Junction Box

The junction box [A] has fuses [B], relays, and diodes. The relays and diodes can not be removed.

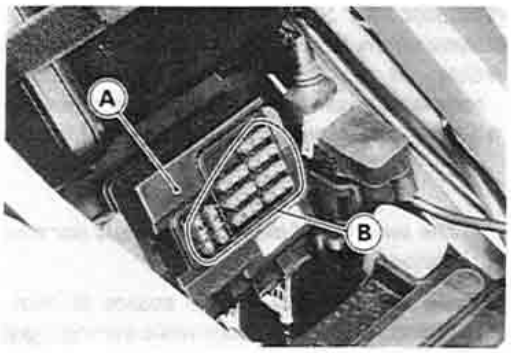

Junction Box Fuse Circuit Inspection

- Remove the seats (see Frame chapter).
- Remove the junction box.
- Pull off the connectors from the junction box.
- Make sure all connector terminals are clean and tight, and none of them have been bent.

★Clean the dirty terminals, and straighten slightly-bent terminals.

- Check conductivity of the numbered terminals with the hand tester.

★If the tester does not read as specified, replace the junction box.

Fuse Circuit Inspection

Tester Connection	Tester Reading (Ω)
1 – 1A	0
1 – 2	0
3A – 4	0
6 – 5	0
6 – 10	0
6 – 7	0
6 – 17	0

Tester Connection	Tester Reading (Ω)
1A – 8	∞
2 – 8	∞
3A – 8	∞
6 – 2	∞
6 – 3A	∞
17 – 3A	∞

Starter Circuit/Headlight Relay Inspection

- Remove the junction box.
- Check conductivity of the following numbered terminals by connecting the hand tester and one 12 V battery to the junction box as shown.

★If the tester does not read as specified, replace the junction box.

Relay Circuit Inspection (with the battery disconnected)

	Tester Connection	Tester Reading (Ω)
Headlight Relay	*7 – 8	∞
	*7 – 13	∞
	(+) (–) *13 – 9	Not ∞ **

	Tester Connection	Tester Reading (Ω)
Starter Circuit Relay	9 – 11	∞
	12 – 13	∞
	(+) (–) 13 – 11	∞
	(+) (–) 12 – 11	Not ∞ **

(*): US, Canada, and Australia Models only
(**): The actual reading varies with the hand tester used.
(+): Apply tester positive lead.
(–): Apply tester negative lead.

Relay Circuit Inspection (with the battery connected)

	Battery Connection (+) (−)	Tester Connection	Tester Reading (Ω)
Headlight Relay	*9 − 13	*7 − 8	0
Starter Circuit Relay	11 − 12	(+) (−) 13 − 11	Not ∞ **

(*): US, Canada, and Australia Models only
(**): The actual reading varies with the hand tester used.
(+): Apply tester positive lead.
(−): Apply tester negative lead.

Diode Circuit Inspection

- Remove the junction box.
- Check conductivity of the following pairs of terminals.

Diode Circuit Inspection

Tester Connection	*13-8, *13-9, 12-11, 12-14, 15-14, 16-14

*: US, Canada, and Australia Models only

★The resistance should be low in one direction and more than ten times as much in the other direction. If any diode shows low or high in both directions, the diode is defective and the junction box must be replaced.

NOTE

○*The actual meter reading varies with the meter used and the individual diodes, but, generally speaking, the lower reading should be from zero to one half the scale.*

Junction Box Internal Circuit (US, Canada, and Australia)

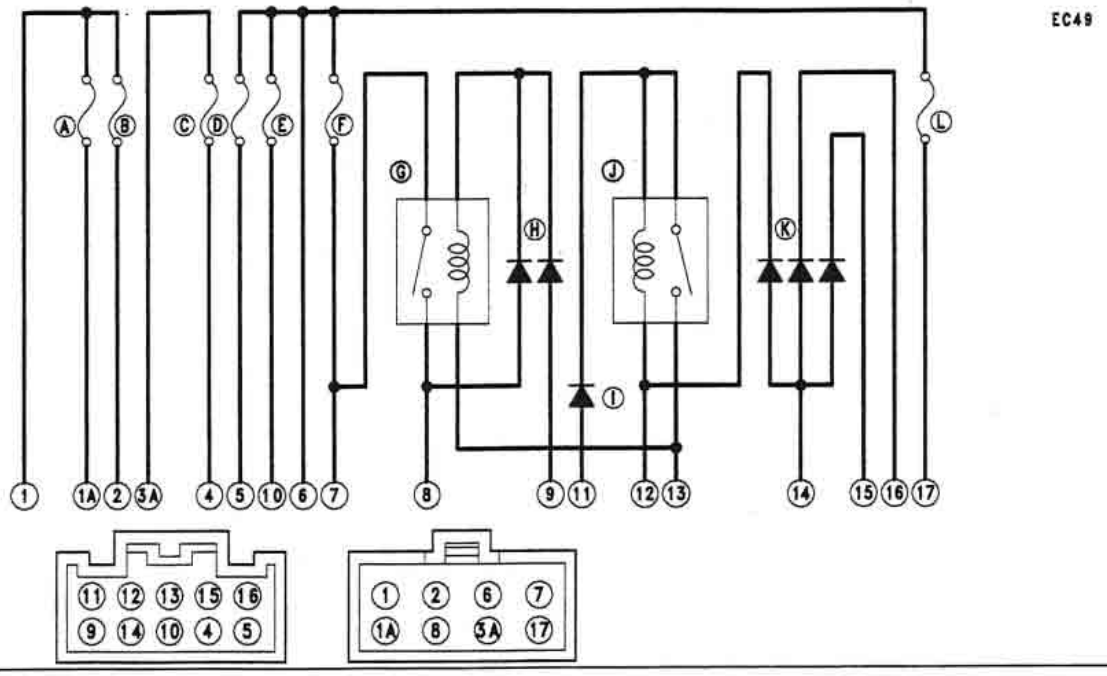

Junction Box Internal Circuit (Other than US, Canada, and Australia)

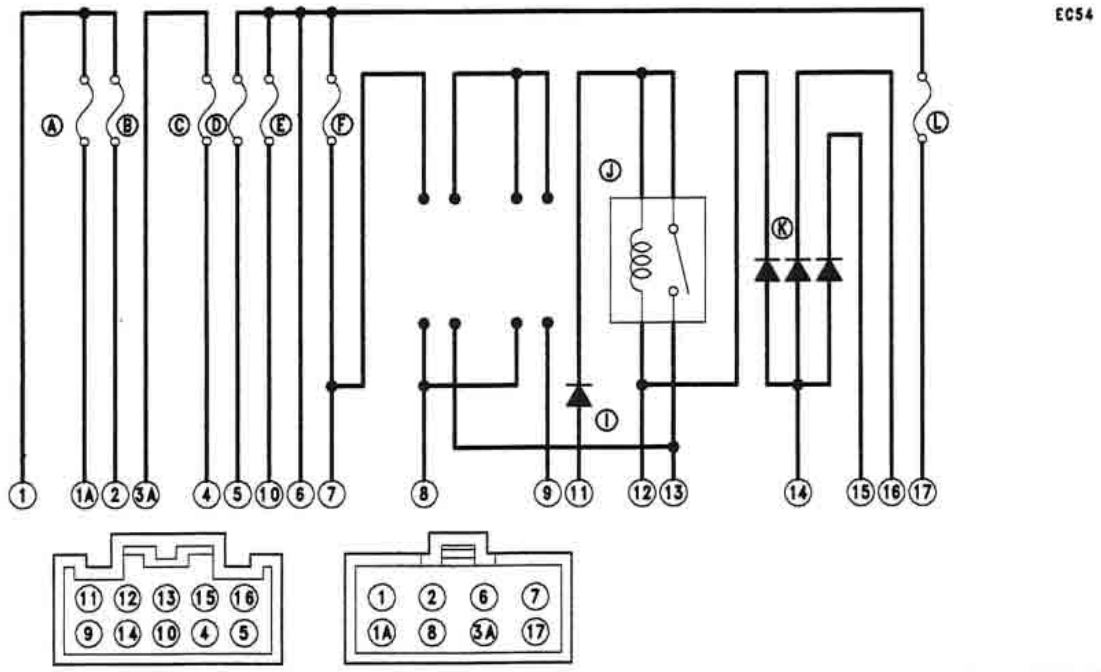

A. Accessory Fuse 10A
B. Fan Fuse 10A
C. Turn Signal Relay Fuse 10A
D. Horn Fuse 10A
E. Ignition Fuse 10A
F. Headlight Fuse 10A
G. Headlight Relay
H. Headlight Diodes
I. Starter Diode
J. Starter Circuit Relay
K. Interlock Diodes
L. Taillight Fuse 10A

Fuse

30A Main Fuse Removal

- Remove:
  Seats
  Starter Relay and 30A Main Fuse Connector [A]
- Pull out the main fuse [B] from the starter relay with needle nose pliers.

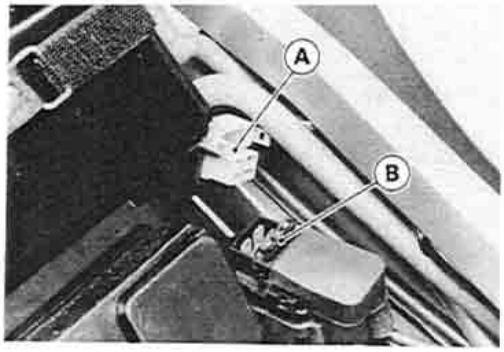

Junction Box Fuse Removal

- Remove the seats (see Frame chapter).
- Unlock the hook to lift up the lid [A].
- Pull the fuses [B] straight out of the junction box with needle nose pliers.

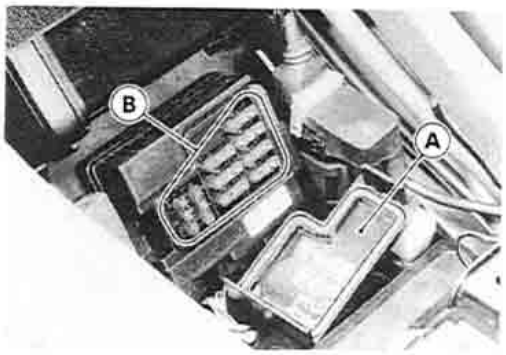

Fuse Installation

- If a fuse fails during operation, inspect the electrical system to determine the cause, and then replace it with a new fuse of proper amperage.
- Install the junction box fuses on the original position as specified on the lid.

Fuse Inspection

- Remove the fuse (see Fuse Removal).
- Inspect the fuse element.

★If it is blown out, replace the fuse. Before replacing a blown fuse, always check the amperage in the affected circuit. If the amperage is equal to or greater than the fuse rating, check the wiring and related components for a short circuit.

Housing [A]	Terminals [C]
Fuse Element [B]	Blown Element [D]

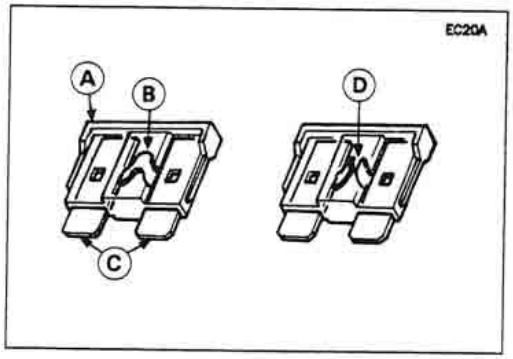

CAUTION

When replacing a fuse, be sure the new fuse matches the specified fuse rating for that circuit. Installation of a fuse with a higher rating may cause damage to wiring and components.

Appendix

Table of Contents

Additional Considerations for Racing

This motorcycle has been manufactured for use in a reasonable and prudent manner and as a vehicle only. However, some may wish to subject this motorcycle to abnormal operation, such as would be experienced under racing conditions. KAWASAKI STRONGLY RECOMMENDS THAT ALL RIDERS RIDE SAFELY AND OBEY ALL LAWS AND REGULATIONS CONCERNING THEIR MOTORCYCLE AND ITS OPERATION.

Racing should be done under supervised conditions, and recognized sanctioning bodies should be contacted for further details. For those who desire to participate in competitive racing or related use, the following technical information may prove useful. However, please note the following important notes.

- You are entirely responsible for the use of your motorcycle under abnormal conditions such as racing, and Kawasaki shall not be liable for any damages which might arise from such use.
- Kawasaki's Limited Motorcycle Warranty and Limited Emission Control Systems Warranty specifically exclude motorcycles which are used in competition or related uses. Please read the warranty carefully.
- Motorcycle racing is a very sophisticated sport, subject to many variables. The following information is theoretical only, and Kawasaki shall not be liable for any damages which might arise from alterations utilizing this information.
- When the motorcycle is operated on public roads, it **must** be in its original state in order to ensure safety and compliance with applicable regulations.

Carburetor:

Sometimes an alteration may be desirable for improved performance under special conditions when proper mixture is not obtained after the carburetor has been properly adjusted, and all parts cleaned and found to be functioning properly.

If the engine still exhibits symptoms of overly rich or lean carburetion after all maintenance and adjustments are correctly performed, the main jet can be replaced with a smaller or larger one. A smaller numbered jet gives a leaner mixture and a larger numbered jet a richer mixture.

Spark Plug:

The spark plug ignites the fuel and air mixture in the combustion chamber. To do this effectively and at the proper time, the correct spark plug must be used, and the spark plug must be kept clean and the gap adjusted.

Tests have shown the plug listed in the "General Information" chapter to be the best plug for general use.

Since spark plug requirements change with the ignition and carburetion adjustments and with riding conditions, whether or not a spark plug of the correct heat range is used should be determined by removing and inspecting the plug

A. Terminal
B. Insulator
C. Cement
D. Gasket
E. Center Electrode
F. Gap (0.7 ~ 0.8 mm)
G. Reach
H. Side Electrode

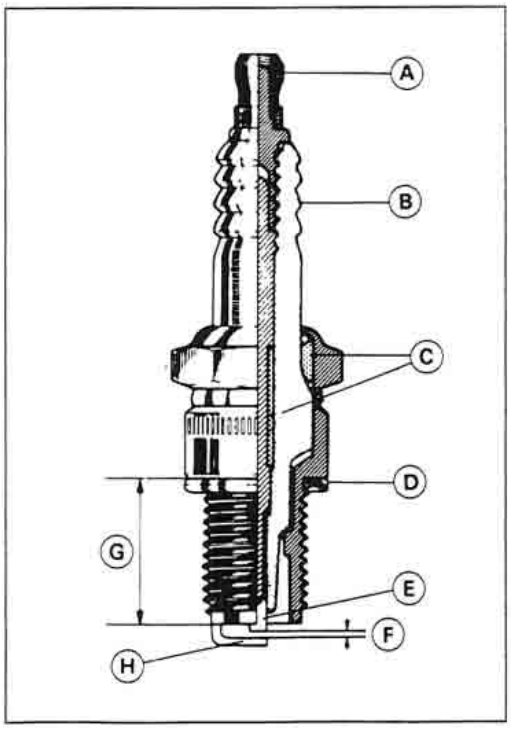

When a plug of the correct heat range is being used, the electrodes will stay hot enough to keep all the carbon burned off, but cool enough to keep from damaging the engine and the plug itself. This temperature is about 400 ~ 800°C (750 ~ 1,450°F) and can be judged by noting the condition and color of the ceramic insulator around the center electrode. If the ceramic is clean and of a light brown color, the plug is operating at the right temperature.

A spark plug for higher operating temperatures is used for racing. Such a plug is designed for better cooling efficiency so that it will not overheat and thus is often called a "colder" plug. If a spark plug with too cool a heat range is used – that is, a "cold" plug that cools itself too well – the plug will stay too cool to burn off the carbon, and the carbon will collect on the electrodes and the ceramic insulator.

The carbon on the electrodes conducts electricity, and can short the center electrode to ground by either coating the ceramic insulator or bridging across the gap. Such a short will prevent an effective spark. Carbon build-up on the plug can also cause other troubles. It can heat up red-hot and cause preignition and knocking, which may eventually burn a hole in the top of the piston.

Spark Plug Inspection

● Remove the spark plug and inspect the ceramic insulator.

★ Whether or not the right temperature plug is being used can be ascertained by noting the condition of the ceramic insulator around the electrode. A light brown color indicates the correct plug is being used. If the ceramic is black, it indicates that the plug is firing at too low a temperature, so the next hotter type should be used instead. If the ceramic is white, the plug is operating at too high a temperature and it should be replaced with the next colder type.

CAUTION

If the spark plug is replaced with a type other than the standard plug, make certain the replacement plug has the same thread pitch and reach (length of threaded portion) and the same type electrode (regular type or projected type) as the standard plug.
If the plug reach is too short, carbon will build up on the plug hole threads in the cylinder head, causing overheating and making it very difficult to insert the correct spark plug later.
If the reach is too long, carbon will build up on the exposed spark plug threads causing overheating, preigniton, and possibly burning a hole in the piston top. In addition, it may be impossible to remove the plug without damaging the cylinder head.

Standard Spark Plug Threads

Diameter:	**10 mm**
Pitch:	**1.0 mm**
Reach:	**19 mm**

NOTE

○ *The heat range of the spark plug functions like a thermostat for the engine. Using the wrong type of spark plug can make the engine run too hot (resulting in engine damage) or too cold (with poor performance, misfiring, and stalling).*

Spark Plug Condition

Carbon fouling

Oil fouling

Normal operation

Overheating

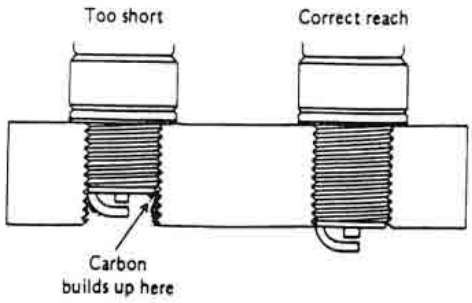

Troubleshooting Guide

NOTE

○ *This is not an exhaustive list, giving every possible cause for each problem listed. It is meant simply as a rough guide to assist the troubleshooting for some of the more common difficulties.*

Engine Doesn't Start, Starting Difficulty:

Starter motor not rotating:
- Starter lockout or neutral switch trouble
- Starter motor trouble
- Battery voltage low
- Starter relays not contacting or operating
- Starter button not contacting
- Wiring open or shorted
- Ignition switch trouble
- Engine stop switch trouble
- Fuse blown

Starter motor rotating but engine doesn't turn over:
- Starter clutch trouble

Engine won't turn over:
- Valve seizure
- Valve lifter seizure
- Cylinder, piston seizure
- Crankshaft seizure
- Connecting rod small end seizure
- Connecting rod big end seizure
- Transmission gear or bearing seizure
- Camshaft seizure
- Starter idle gear seizure

No fuel flow:
- No fuel in tank
- Fuel pump trouble
- Fuel tank air vent obstructed
- Fuel filter clogged
- Fuel tap clogged
- Fuel line clogged
- Float valve clogged

Engine flooded:
- Fuel level in carburetor float bowl too high
- Float valve worn or stuck open
- Starting technique faulty
- (When flooded, crank the engine with the throttle fully opened to allow more air to reach the engine.)

No spark; spark weak:
- Battery voltage low
- Spark plug dirty, broken, or maladjusted
- Spark plug cap or high tension wiring trouble
- Spark plug cap shorted or not in good contact
- Spark plug incorrect
- IC igniter trouble
- Neutral, starter lockout, or side stand switch trouble
- Pickup coil trouble
- Ignition coil trouble
- Ignition or engine stop switch shorted
- Wiring shorted or open
- Fuse blown

Fuel/air mixture incorrect:
- Pilot screw and/or idle adjusting screw maladjusted
- Pilot jet, or air passage clogged
- Air cleaner clogged, poorly sealed, or missing
- Starter jet clogged

Compression Low:
- Spark plug loose
- Cylinder head not sufficiently tightened down
- No valve clearance
- Cylinder, piston worn
- Piston ring bad (worn, weak, broken, or sticking)
- Piston ring/groove clearance excessive
- Cylinder head gasket damaged
- Cylinder head warped
- Valve spring broken or weak
- Valve not seating properly (valve bent, worn, or carbon accumulation on the seating surface)

Poor Running at Low Speed:

Spark weak:
- Battery voltage low
- Spark plug dirty, broken, or maladjusted
- Spark plug cap or high tension wiring trouble
- Spark plug cap shorted or not in good contact
- Spark plug incorrect
- IC igniter trouble
- Pickup coil trouble
- Ignition coil trouble

Fuel/air mixture incorrect:
- Pilot screw maladjusted
- Pilot jet, or air passage clogged
- Air bleed pipe bleed holes clogged
- Pilot passage clogged
- Air cleaner clogged, poorly sealed, or missing
- Starter plunger stuck open
- Fuel level in carburetor float bowl too high or too low
- Fuel tank air vent obstructed
- Carburetor holder loose
- Air cleaner duct loose
- Air cleaner O-ring damaged

Compression low:
- Spark plug loose
- Cylinder head not sufficiently tightened down
- No valve clearance
- Cylinder, piston worn
- Piston ring bad (worn, weak, broken, or sticking)
- Piston ring/groove clearance excessive
- Cylinder head warped
- Cylinder head gasket damaged
- Valve spring broken or weak
- Valve not seating properly (valve bent, worn, or carbon accumulation on the seating surface)

Other:
- IC igniter trouble
- Carburetors not synchronizing
- Carburetor vacuum piston doesn't slide smoothly
- Carburetor vacuum piston diaphragm damage
- Engine oil viscosity too high
- Drive train trouble
- Brake dragging
- Air suction valve trouble
- Vacuum switch valve trouble

Poor Running or No Power at High Speed:

Firing incorrect:
- Spark plug dirty, broken, or maladjusted
- Spark plug cap or high tension wiring trouble
- Spark plug cap shorted or not in good contact
- Spark plug incorrect
- IC igniter trouble
- Pickup coil trouble
- Ignition coil trouble

Fuel/air mixture incorrect:
- Starter plunger stuck open
- Main jet clogged or wrong size
- Jet needle or needle jet worn
- Air jet clogged
- Fuel level in carburetor float bowl too high or too low
- Bleed holes of needle jet holder or needle jet clogged
- Air cleaner clogged, poorly sealed, or missing
- Air cleaner duct loose
- Air cleaner O-ring damaged
- Water or foreign matter in fuel
- Carburetor holder loose
- Fuel tank air vent obstructed
- Fuel tap clogged
- Fuel line clogged
- Fuel pump trouble

Compression low:
- Spark plug loose
- Cylinder head not sufficiently tightened down
- No valve clearance
- Cylinder, piston worn
- Piston ring bad (worn, weak, broken, or sticking)
- Piston ring/groove clearance excessive
- Cylinder head gasket damaged
- Cylinder head warped
- Valve spring broken or weak
- Valve not seating properly (valve bent, worn, or carbon accumulation on the seating surface.)

Knocking:
- Carbon built up in combustion chamber
- Fuel poor quality or incorrect
- Spark plug incorrect
- IC igniter trouble

Miscellaneous:
- Throttle valve won't fully open
- Carburetor vacuum piston doesn't slide smoothly
- Carburetor vacuum piston diaphragm damaged
- Brake dragging
- Clutch slipping
- Overheating
- Engine oil level too high
- Engine oil viscosity too high
- Drive train trouble
- Air suction valve trouble
- Vacuum switch valve trouble

Overheating:

Firing incorrect:
- Spark plug dirty, broken, or maladjusted
- Spark plug incorrect
- IC igniter trouble

Fuel/air mixture incorrect:
- Main jet clogged or wrong size
- Fuel level in carburetor float bowl too low
- Carburetor holder loose
- Air cleaner duct loose
- Air cleaner poorly sealed, or missing
- Air cleaner O-ring damaged
- Air cleaner clogged

Compression high:
- Carbon built up in combustion chamber

Engine load faulty:
- Clutch slipping
- Engine oil level too high
- Engine oil viscosity too high
- Drive train trouble
- Brake dragging

Lubrication inadequate:
- Engine oil level too low
- Engine oil poor quality or incorrect

Oil cooler incorrect:
- Oil cooler fin clogged
- Oil cooler clogged

Gauge incorrect:
- Water temperature gauge broken
- Water temperature sensor broken

Coolant incorrect:
- Coolant level too low
- Coolant deteriorated

Cooling system component incorrect:
- Radiator fin damaged
- Radiator clogged
- Thermostat trouble
- Radiator cap trouble
- Radiator fan switch trouble
- Fan motor broken
- Fan blade damaged
- Water pump not turning
- Water pump impeller damaged

Over Cooling:

Gauge incorrect:
- Water temperature gauge broken
- Water temperature sensor broken

Cooling system component incorrect:
- Radiator fan switch trouble
- Thermostat trouble

Clutch Operation Faulty:

Clutch slipping:
- Friction plate worn or warped
- Steel plate worn or warped
- Clutch spring broken or weak
- Clutch hub or housing unevenly worn
- No clutch lever play
- Clutch inner cable catching
- Clutch release mechanism trouble

Clutch not disengaging properly:
- Clutch plate warped or too rough
- Clutch spring compression uneven
- Engine oil deteriorated
- Engine oil viscosity too high

Engine oil level too high
Clutch housing frozen on drive shaft
Clutch hub nut loose
Clutch hub spline damaged
Clutch friction plate installed wrong
Clutch lever play excessive
Clutch release mechanism trouble

Gear Shifting Faulty:

Doesn't go into gear; shift pedal doesn't return:
Clutch not disengaging
Shift fork bent or seized
Gear stuck on the shaft
Gear positioning lever binding
Shift return spring weak or broken
Shift return spring pin loose
Shift mechanism arm spring broken
Shift mechanism arm broken
Shift pawl broken

Jumps out of gear:
Shift fork worn, bent
Gear groove worn
Gear dogs and/or dog holes worn
Shift drum groove worn
Gear positioning lever spring weak or broken
Shift fork pin worn
Drive shaft, output shaft, and/or gear splines worn

Overshifts:
Gear positioning lever spring weak or broken
Shift mechanism arm spring broken

Abnormal Engine Noise:

Knocking:
IC igniter trouble
Carbon built up in combustion chamber
Fuel poor quality or incorrect
Spark plug incorrect
Overheating

Piston slap:
Cylinder/piston clearance excessive
Cylinder, piston worn
Connecting rod bent
Piston pin, piston pin hole worn

Valve noise:
Valve clearance incorrect
Valve spring broken or weak
Camshaft bearing worn
Valve lifter worn

Other noise:
Connecting rod small end clearance excessive
Connecting rod big end clearance excessive
Piston ring worn, broken, or stuck
Piston seizure, damage
Cylinder head gasket leaking
Exhaust pipe leaking at cylinder head connection
Crankshaft runout excessive
Engine mounts loose
Crankshaft bearing worn
Primary gear worn or chipped
Camshaft chain tensioner trouble
Camshaft chain, sprocket, guide worn
Air suction valve damaged
Vacuum switch valve damaged
Alternator rotor loose

Abnormal Drive Train Noise:

Clutch noise:
Clutch rubber damper weak or damaged
Clutch housing/friction plate clearance excessive
Clutch housing gear worn

Transmission noise:
Bearings worn
Transmission gears worn or chipped
Metal chips jammed in gear teeth
Engine oil insufficient

Drive chain noise:
Drive chain adjusted improperly
Drive chain worn
Rear and/or engine sprocket worn
Chain lubrication insufficient
Rear wheel misaligned

Abnormal Frame Noise:

Front fork noise:
Oil insufficient or too thin
Spring weak or broken

Rear shock absorber noise:
Shock absorber damaged

Disc brake noise:
Pad installed incorrectly
Pad surface glazed
Disc warped
Caliper trouble

Other noise:
Bracket, nut, bolt, etc. not properly mounted or tightened

Oil Pressure Warning Light Goes On:

Engine oil pump damaged
Engine oil screen clogged
Engine oil level too low
Engine oil viscosity too low
Camshaft bearings worn
Crankshaft bearings worn
Oil pressure switch damaged
Wiring faulty
Relief valve stuck open
O-ring at the oil passage in the crankcase damaged

Exhaust Smokes Excessively:

White smoke:
Piston oil ring worn
Cylinder worn
Valve oil seal damaged
Valve guide worn
Engine oil level too high

Black smoke:
Air cleaner clogged
Main jet too large or fallen off

Starter plunger stuck open
Fuel level in carburetor float bowl too high

Brown smoke:
Main jet too small
Fuel level in carburetor float bowl too low
Air cleaner duct loose
Air cleaner O-ring damaged
Air cleaner poorly sealed or missing

Handling and/or Stability Unsatisfactory:

Handlebar hard to turn:
Cable routing incorrect
Hose routing incorrect
Wiring routing incorrect
Steering stem locknut too tight
Steering stem bearing damaged
Steering stem bearing lubrication inadequate
Steering stem bent
Tire air pressure too low

Handlebar shakes or excessively vibrates:
Tire worn
Swing arm pivot bearings worn
Rim warped, or not balanced
Wheel bearing worn
Handlebar clamp loose
Steering stem head nut loose

Handlebar pulls to one side:
Frame bent
Wheel misalignment
Swing arm bent or twisted
Steering maladjusted
Front fork bent
Right and left front fork oil level uneven

Shock absorption unsatisfactory:
(Too hard)
Front fork oil excessive
Front fork oil viscosity too high
Rear shock absorber adjustment too hard
Tire air pressure too high
Front fork bent
(Too soft)
Tire air pressure too low
Front fork oil insufficient and/or leaking
Front fork oil viscosity too low
Rear shock adjustment too soft
Front fork, rear shock absorber spring weak
Rear shock absorber oil leaking

Brake Doesn't Hold:

Air in the brake line
Pad or disc worn
Brake fluid leakage
Disc warped
Contaminated pad
Brake fluid deteriorated
Primary or secondary cup damaged in master cylinder
Master cylinder scratched inside

Battery Trouble:

Battery discharged:
Battery faulty (e.g., plates sulphated, shorted through sedimentation, electrolyte insufficient)
Battery leads making poor contact
Load excessive (e.g., bulb of excessive wattage)
Ignition switch trouble
Alternator trouble
Wiring faulty
Regulator/rectifier trouble

Battery overcharged:
Regulator/rectifier trouble
Battery faulty

General Lubrication

Lubrication

- Before lubricating each part, clean off any rusty spots with rust remover and wipe off any grease, oil, dirt, or grime.
- Lubricate the points listed below with indicated lubricant.

NOTE

○ *Whenever the vehicle has been operated under wet or rainy conditions, or especially after using a high-pressure water spray, perform the general lubrication.*

Pivots: Lubricate with Motor Oil.

Clutch Lever
Brake Lever
Brake Pedal
Side Stand
Rear Brake Rod Joint

Points: Lubricate with Grease.

Clutch Inner Cable Upper and Lower Ends
Throttle Inner Cable Lower Ends
Choke Inner Cable Lower End
Speedometer Inner Cable*

(*): Grease the lower part of the inner cable sparingly.

Cables: Lubricate with Rust Inhibiter.

Choke Cable
Throttle Cables
Clutch Cable

Special Tool – Pressure Cable Luber: K56019-021 [A]

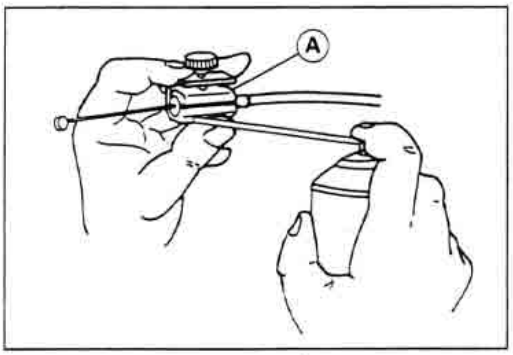

Nut, Bolt, and Fastener Tightness

Tightness Inspection

● Check the tightness of the bolts and nuts listed here. Also, check to see that each cotter pin is in place and in good condition.

NOTE

○ *For the engine fasteners, check the tightness of them when the engine is cold (at room temperature).*

★ If there are loose fasteners, retorque them to the specified torque following the specified tightening sequence. Refer to the appropriate chapter for torque specifications. If torque specifications are not in the appropriate chapter, see the Standard Torque Table. For each fastener, first loosen it by 1/2 turn, then tighten it.

★ If cotter pins are damaged, replace them with new ones.

Nut, Bolt and Fastener to be checked

Wheels:
- Front Axle Nut
- Front Axle Clamp Bolts
- Rear Axle Nut
- Rear Axle Nut Cotter Pin

Brakes:
- Front Master Cylinder Clamp Bolts
- Caliper Mounting Bolts
- Rear Master Cylinder Mounting Bolts
- Brake Lever Pivot Nut
- Brake Pedal Bolt
- Brake Rod Joint Cotter Pin

Suspension:
- Front Fork Clamp Bolts
- Front Fender Mounting Bolts
- Rear Shock Absorber Mounting Bolts
- Swingarm Pivot Shaft Nut
- Uni-Trak Link Nuts

Steering:
- Stem Head Nut
- Handlebar Mounting Bolts

Engine:
- Engine Mounting Bolts
- Cylinder Head Bolts
- Muffler Mounting Bolts
- Exhaust Pipe Holder Nuts
- Muffler Connecting Clamp Bolt
- Clutch Lever Pivot Nut

Others:
- Side Stand Bolt
- Footpeg Mounting Bolts
- Footpeg Bracket Mounting Bolts

Unit Conversion Table

Prefixes for Units:

Prefix	Symbol	Power
mega	M	x 1 000 000
kilo	k	x 1 000
centi	c	x 0.01
milli	m	x 0.001
micro	μ	x 0.000001

Units of Mass:

kg	x	2.205	=	lb
g	x	0.03527	=	oz

Units of Volume:

L	x	0.2642	=	gal (US)
L	x	0.2200	=	gal (imp)
L	x	1.057	=	qt (US)
L	x	0.8799	=	qt (imp)
L	x	2.113	=	pint (US)
L	x	1.816	=	pint (imp)
mL	x	0.03381	=	oz (US)
mL	x	0.02816	=	oz (imp)
mL	x	0.06102	=	cu in

Units of Force:

N	x	0.1020	=	kg
N	x	0.2248	=	lb
kg	x	9.807	=	N
kg	x	2.205	=	lb

Units of Length:

km	x	0.6214	=	mile
m	x	3.281	=	ft
mm	x	0.03937	=	in

Units of Torque:

N-m	x	0.1020	=	kg-m
N-m	x	0.7376	=	ft-lb
N-m	x	8.851	=	in-lb
kg-m	x	9.807	=	N-m
kg-m	x	7.233	=	ft-lb
kg-m	x	86.80	=	in-lb

Units of Pressure:

kPa	x	0.01020	=	kg/cm²
kPa	x	0.1450	=	psi
kPa	x	0.7501	=	cm Hg
kg/cm²	x	98.07	=	kPa
kg/cm²	x	14.22	=	psi
cm Hg	x	1.333	=	kPa

Units of Speed:

km/h	x	0.6214	=	mph

Units of Power:

kW	x	1.360	=	PS
kW	x	1.341	=	HP
PS	x	0.7355	=	kW
PS	x	0.9863	=	HP

Units of Temperature:

$$\frac{9(°C+40)}{5} - 40 = °F \qquad \frac{5(°F+40)}{9} - 40 = °C$$

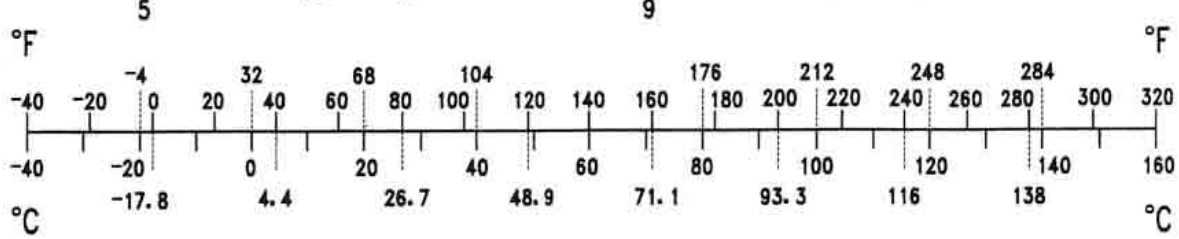

Supplement - 1996 - 1997 Models

Table of Contents

This "Supplement – 1996 - 1997 models" chapter is designed to be used in conjunction with the front part of this manual (up to 16-10). The maintenance and repair procedures described in this chapter are only those that are unique to the 1996 through 1997 models.
Complete and proper servicing of the 1995 through 1996 models, therefore requires mechanics to read both this chapter and the text in front of this chapter.

General Information

Model Identification

ZX600-F2 (Europian Model)

ZX600-F3 (US and Canadian Models)

ZX600-F3 (Europian Model)

General Specifications

Items		ZX600-F2,F3
Dimensions:		
Overall length		2 030 mm, (FG)(GR)(NR)(SD)(ST) 2 115 mm
Overall width		690 mm
Overall height		1 130 mm
Wheelbase		1 415 mm
Road clearance		120 mm
Seat height		810 mm
Dry mass		182 kg, (CA) 182.5 kg
Curb mass:	Front	105 kg
	Rear	101 kg, (CA) 101.5 kg
Fuel tank capacity		18 L
Performance:		
Minimum turning radius		3.2 m
Engine:		
Type		4-stroke, DOHC, 4-cylinder
Cooling system		Liquid-cooled
Bore and stroke		66.0 x 43.8 mm
Displacement		599 mL
Compression ratio		11.8
Maximum horsepower		77 kW (105 PS) @12 500 r/min (rpm), (AR) 74 kW (100 PS) @12 500 r/min (rpm), (AS) 76 kW (103 PS) @12 500 r/min(rpm), (FR) 75.1 kW (102 PS) @12 500 r/min (rpm) (UTAC's norm), (FG) 72 kW (98 PS) @12 500 r/min (rpm), (SD) 44 kW (60 PS) @10 500 r/min (rpm), (ST) 30 kW (41 PS) @6 000 r/min (rpm), (US) ---
Maximum torque		65 N-m(6.6 kg-m, 47.7 ft-lb) @10 000 r/min(rpm), (AR)(AS)(FG) 64 N-m (6.5 kg-m, 47.0 ft-lb) @10 000 r/min (rpm), (ST)(SD) 49 N-m (5.0 kg-m, 36.2 ft-lb) @5 500 r/min (rpm), (FR)(UK)(US) ---
Carburetion system		Carburetors, Keihin CVKD 36 × 4
Starting system		Electric starter
Ignition system		Battery and coil (transistorized)
Timing advance		Electronically advanced(digital igniter)
Ignition timing		From 12.5° BTDC @1 050 r/min (rpm) to 35° BTDC @5 000 r/min (rpm) (AR)(CA)(KR)(FG,F3 Model) From 5° BTDC @1 300 r/min (rpm) to 35° BTDC @5 000 r/min (rpm), (ST) From 2.5° BTDC @1 300 r/min (rpm) to 35° BTDC @5 000 r/min (rpm)
Spark plug		NGK CR9E or ND U27ESR-N
Cylinder numbering method		Left to right, 1-2-3-4
Firing order		1-2-4-3
Valve timing:		
Inlet	Open	58° BTDC
	Close	78° ABDC
	Duration	316°
Exhaust	Open	66° BBDC
	Close	46° ATDC
	Duration	292°

Items		ZX600-F2,F3
Lubrication system		Forced lubrication (wet sump with cooler)
Engine oil:		
Grade		SE, SF or SG class
Viscosity		SAE10W-40, 10W-50, 20W-40, or 20W-50
Capacity		4.0 L
Drive Train:		
Primary reduction system:		
Type		Gear
Reduction ratio		2.022 (89/44)
Clutch type		Wet multi disc
Transmission:		
Type		6-speed, constant mesh, return shift
Gear ratios:	1st	2.923 (38/13)
	2nd	2.062 (33/16)
	3rd	1.631 (31/19)
	4th	1.380 (29/21)
	5th	1.217 (28/23)
	6th	1.083 (26/24)
Final drive system:		
Type		Chain drive
Reduction ratio		2.666 (40/15)
Overall drive ratio		5.843 @Top gear
Frame:		
Type		Tubular, diamond
Caster (rake angle)		24°
Trail		87 mm
Front tire:	Type	Tubeless
	Size	120/60 ZR17
Rear tire:	Type	Tubeless
	Size	160/60 ZR17
Front suspension:	Type	Telescopic fork
	Wheel travel	120 mm
Rear suspension:	Type	Swingarm (uni-trak)
	Wheel travel	137 mm
Brake type:	Front	Dual disc
	Rear	Single disc
Electrical Equipment:		
Battery		12 V 10 Ah
Headlight:	Type	Semi-sealed beam
	Bulb	12V60/55W (quartz-halogen),
Tail/brake light		12 V 5/21 W × 2, (CN)(US) 12 V 8/27 W×2
Alternator:	Type	Three-phase AC
	Rated output	24 A/ 14 V @8 000 r/min (rpm)

Specifications are subject to change without notice, and may not apply to every country.

(AR) : Austrian Model
(AS) : Australian Model
(CA) : California Model
(CN) : Canadian Model
(FG) : German Model
(FR) : French Model
(GR): Greek Model
(KR): Korean Model
(NR): Norwegian Model
(SD): Swedish Model
(ST) : Swiss Model
(US): U.S. Model

Periodic Maintenance Chart

The scheduled maintenance must be done in accordance with this chart to keep the motorcycle in good running condition. **The initial maintenance is vitally important and must not be neglected.**

FREQUENCY / OPERATION	Every (Whichever comes first)	*ODOMETER READING 1 000 km (600 mile)	6 000 km (4 000 mile)	12 000 km (7 500 mile)	18 000 km (12 000 mile)	24 000 km (15 000 mile)	30 000 km (20 000 mile)	36 000 km (24 000 mile)	
Spark plug – clean			●	●	●	●	●	●	
Valve clearance – check*				●		●		●	
Air suction valve – check*			●	●	●	●	●	●	
Air cleaner element –clean		●		●		●		●	
Throttle grip play – check*		●		●		●		●	
Idle speed – check*		●	●	●	●	●	●	●	
Carburetor synchronization – check †				●		●		●	
Engine oil – change #	6 months	●	●	●	●	●	●	●	
Oil filter – replace		●		●		●		●	
Drive chain wear – check † #		●	●	●	●	●	●	●	
Brake pad wear – check † #			●	●	●	●	●	●	
Brake light switch – check †		●	●	●	●	●	●	●	
Steering – check †		●	●	●	●	●	●	●	
Front fork oil – change	2 years					●			
Rear shock absorber oil leak – check †				●		●		●	
Front fork oil leak – check †				●	●	●			
Tire wear – check †			●	●	●	●	●	●	
Swingarm pivot, uni-trak linkage – lubricate				●		●		●	
General lubrication – perform				●		●		●	
Nuts, bolts, and fasteneres tighteness – check †		●		●		●		●	
Drive chain – lubricate #	600 km		●	●	●	●	●	●	
Drive chain slack – check † #	1000 km		●	●	●	●	●	●	
Brake fluid level – check †	month	●	●	●	●	●	●	●	
Clutch – adjust	month	●	●	●	●	●	●	●	
Radiator hoses, connection – check †		●							
Brake fluid – change	2 years					●			
Brake master cylinder cup and dust seal – replace									
Coolant – change	2 years					●			
Caliper piston seal and dust seal – replace	4 years								
Steering stem bearing – lubricate	2 years					●			

: Service more frequently when operating in severe conditions, dusty, set, muddy, high speed, or frequent starting / stopping.

* : For higher odometer readings, repeat at the frequency interval established here.

† : Replace, add, adjust, clean, or torque if necessary.

Fuel System

Specifications

Item	Standard
Throttle Grip and Cables:	
Throttle grip free play	2 ~ 3 mm
Choke Cable:	
Free Play	2 ~ 3 mm
Carburetors:	
Make, type	KEIHIN, CVKD36 × 4
Main jet	(#1, #4 cyl.) #145, (#2, #3 cyl.) #150
Main air jet	#60
Jet needle	N1VV
Pilot jet (slow jet)	#35
Pilot air jet (slow air jet)	#100
Pilot screw (turns out)	2 turns out, (US)(CA)(ST) –
Starter jet	#50
Idle speed	1,100 ± 50 r/min (rpm), (ST) (FG, ZX600-F3) 1,300 ± 50 r/min (rpm)
Carburetor synchronization vacuum	Less than 2.7 kPa (2 cm Hg) difference between any two carburetors
Service fuel level	9 ± 1 mm below the lower end of the float level mark
Float height	17 ± 2 mm

(ST): Swiss Model (US): U.S. Model (CA): California Model
(FG): German Model

Special Tools – Pressure Cable Luber: k56019-021
Vacuum Gauge: 57001-1369
Pilot Screw Adjuster, C: 57001-1292
Carburetor Drain Plug Wrench, Hex 3: 57001-1269
Fuel Level Gauge: 57001-1017
Fork Oil Level Gauge: 57001-1290

(as required)
Pilot Screw Adjuster Adapter, Φ5: 57001-1372
Pilot Screw Adjuster Driver: 57001-1373

Engine Top End

Specifications

Item		Standard	Service Limit
Clean Air System:			
Vacuum switch valve closing pressure:		Open → Close 57 ~ 65 kPa (430 ~ 490 mmHg)	- - -
Camshafts			
Cam height:	Exhaust	35.394 ~ 35.406 mm,	34.29 mm
	Inlet	35.143 ~ 35.257 mm,	35.04 mm
Camshaft journal, camshaft cap clearance		0.038 ~ 0.081 mm	0.17 mm
Camshaft journal diameter		23.940 ~ 23.962 mm	23.91 mm
Camshaft bearing inside diameter		24.000 ~ 24.021 mm	24.08 mm
Camshaft runout		TIR 0.02 mm or less	TIR 0.1 mm
Camshaft chain 20-link length		127.00 ~ 127.36 mm	128.9 mm
Cylinder Head:			
Cylinder compression		(usable range) 950 ~ 1 450 kPa (9.7 ~ 14.8 kg/cm², 138 ~ 210 psi) @350 r/min (rpm)	- - -
Cylinder head warp		- - -	0.05 mm
Valves:			
Valve clearance:	Exhaust	0.22 ~ 0.31 mm	- - -
	Inlet	0.15 ~ 0.24 mm	- - -
Valve head thickness:	Exhaust	0.8 mm	0.5 mm
	Inlet	0.5 mm	0.25 mm
Valve stem bend		TIR 0.01mm or less	TIR 0.05 mm
Valve stem diameter:	Exhaust	3.955 ~ 3.970 mm	3.94 mm
	Inlet	3.975 ~ 3.990 mm	3.96 mm
Valve guide inside diameter	Exhaust	4.000 ~ 4.012 mm	4.08 mm
	Inlet	4.000 ~ 4.012 mm	4.08 mm
Valve/valve guide clearance (wobble method):	Exhaust	0.10 ~ 0.18 mm	0.35 mm
	Inlet	0.03 ~ 0.12 mm	0.29 mm
Valve seat cutting angle		45°, 32°, 60°	- - -

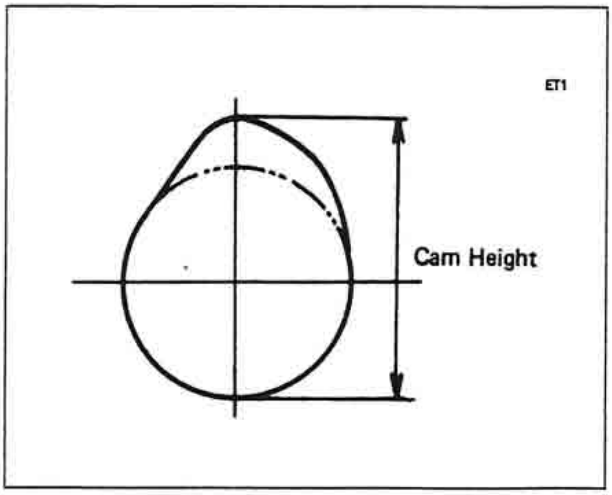

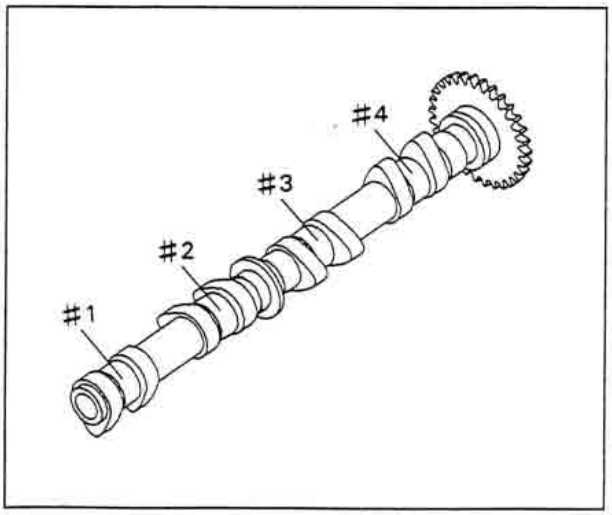

Item		Standard	Service Limit
Valve seat surface:			
Width:	Exhaust	0.5 ~ 1.0 mm	- - -
	Inlet	0.5 ~ 1.0 mm	- - -
Outside diameter:	Exhaust	22.1 ~ 22.3 mm	- - -
	Inlet	26.1 ~ 26.3 mm	- - -
Valve spring free length:	Exhaust	49.03 mm	47.7 mm
	Inlet(Inner)	44.1 mm	42.6 mm
	Inlet(Outer)	48.2 mm	46.6 mm
Cylinder, Piston:			
Cylinder inside diameter		66.000 ~ 66.012 mm	66.10 mm
Piston diameter		65.940 ~ 65.960 mm	65.79 mm
Piston/cylinder clearance		0.040 ~ 0.072 mm	- - -
Piston ring/groove clearance:	Top	0.05 ~ 0.09 mm	0.19 mm
	Second	0.03 ~ 0.07 mm	0.17 mm
Piston ring groove width:	Top	0.84 ~ 0.86 mm	0.94 mm
	Second	0.82 ~ 0.84 mm	0.92 mm
Piston ring thickness:	Top	0.77 ~ 0.79 mm	0.70 mm
	Second	0.77 ~ 0.79 mm	0.70 mm
Piston ring end gap:	Top	0.15 ~ 0.30 mm	0.6 mm
	Second	0.30 ~ 0.45 mm	0.8 mm

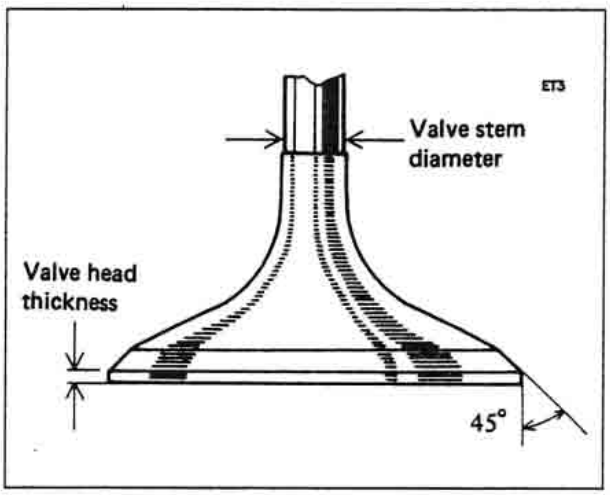

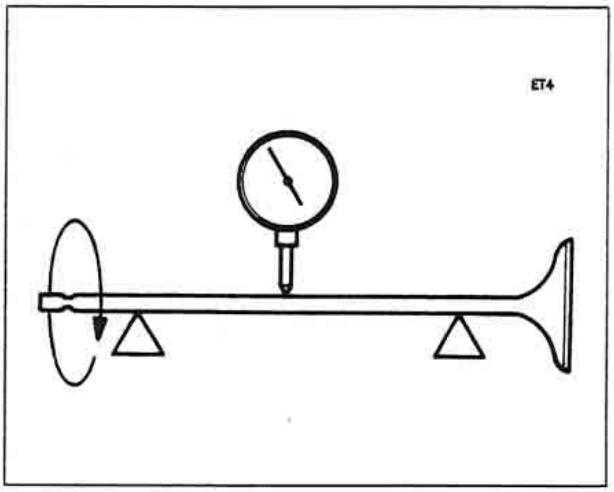

Special Tools – **Fork Oil Level Gauge: 57001-1290**
Vacuum Gauge: 57001-1369
Spark Plug Wrench, 16mm: 92110-1146
Compression Gauge: 57001-221
Compression Gauge Adapter, M10 X 1.0: 57001-1317
Valve Spring Compressor Assembly: 57001-241
Valve Spring Compressor Adapter, Φ22: 57001-1202
Valve Spring Compressor Adapter, Φ20: 57001-1154
Valve Guide Arbor, Φ4: 57001-1273
Valve Guide Reamer, Φ4: 57001-1274
Valve Seat Cutter, 45° – Φ24.5: 57001-1113
Valve Seat Cutter, 32° – Φ25: 57001-1118
Valve Seat Cutter, 60° – Φ30: 57001-1123
Valve Seat Cutter, 45° – Φ27.5: 57001-1114
Valve Seat Cutter, 32° – Φ28: 57001-1119
Valve Seat Cutter, 60° – Φ25: 57001-1328
Valve Seat Cutter Holder, Φ4: 57001-1275
Valve Seat Cutter Holder Bar: 57001-1128
Piston Pin Puller Assembly: 57001-910

Sealant – Kawasaki Bond (Silicone Sealant): 56019-120

Crankshaft/Transmission

Specifications

Item	Standard	Service Limit
Crankshaft, Connecting Rods:		
Connecting rod big end side clearance	0.13 ~ 0.33 mm	0.5 mm
Connecting rod big end bearing insert/crankpin clearance	0.031 ~ 0.059 mm	0.10 mm
Crankpin diameter:	29.984 ~ 30.000 mm	29.97 mm
Marking None	29.984 ~ 29.994 mm	- - -
○	29.995 ~ 30.000 mm	- - -
Connecting rod big end bore diameter:	33.000 ~ 33.016 mm	---
Marking None	33.000 ~ 33.008 mm	- - -
○	33.009 ~ 33.016 mm	- - -
Connecting rod big end bearing insert thickness:		
Pink	1.475 ~ 1.480 mm	---
Brown	1.480 ~ 1.485 mm	---
Black	1.485 ~ 1.490 mm	---

Connecting rod big end bearing insert selection:

Con-rod Big End Bore Diameter Marking	Crankpin Diameter Marking	Bearing Insert	
		Size Color	Part Number
None	○	Pink	92028-1709
None	None	Brown	92028-1494
○	○		
○	None	Black	92028-1493

Item	Standard	Service Limit
Connecting Rod Bolt Stretch (Usable Range)		
New connecting rod	0.20 ~ 0.32 mm	- - -
Used connecting rod	0.24 ~ 0.36 mm	- - -
Crankshaft side clearance	0.05 ~ 0.20 mm	0.40 mm
Crankshaft runout	TIR 0.02 mm or less	TIR 0.05 mm
Crankshaft main bearing insert/ journal clearance	0.014 ~ 0.038 mm	0.07 mm
Crankshaft main journal diameter:	29.984 ~ 30.000 mm	29.96 mm
Marking None	29.984 ~ 29.994 mm	- - -
1	29.995 ~ 30.000 mm	- - -
Crankcase main bearing bore diameter:	33.000 ~ 33.016 mm	- - -
Marking ○	33.000 ~ 33.008 mm	- - -
None	33.009 ~ 33.016 mm	- - -
Crankshaft main bearing insert thickness:		
Brown	1.491 ~ 1.495 mm	- - -
Black	1.495 ~ 1.499 mm	- - -
Blue	1.499 ~ 1.503 mm	- - -

Crankshaft main bearing insert selection:

Crankcase Main Bearing Bore Diameter Marking	Crankshaft Main Journal Diameter Marking	Bearing Insert*		
		Size Color	Part Number	Journal Nos.
○	1	Brown	92028-1770	3, 5
			92028-1773	1, 2, 4
None	1	Black	92028-1769	3, 5
○	None		92028-1772	1, 2, 4
None	None	Blue	92028-1768	3, 5
			92028-1771	1, 2, 4

*The bearing inserts for Nos. 1, 2 and 4 journals have an oil groove, respectively.

Item	Standard	Service Limit
Transmission:		
Shift fork ear thickness	5.9 ~ 6.0 mm	5.8 mm
Gear shift fork groove width	6.05 ~ 6.15 mm	6.25 mm
Shift fork guide pin diameter	5.9 ~ 6.0 mm	5.8 mm
Shift drum groove width	6.05 ~ 6.20 mm	6.3 mm

Special Tool – Outside Circlip Pliers: 57001-144

Sealant – Kawasaki Bond (Silicone Sealant): 56019-120

Crankshaft and Connecting Rods

Connecting Rod Big End Bearing Insert/Crankpin Wear

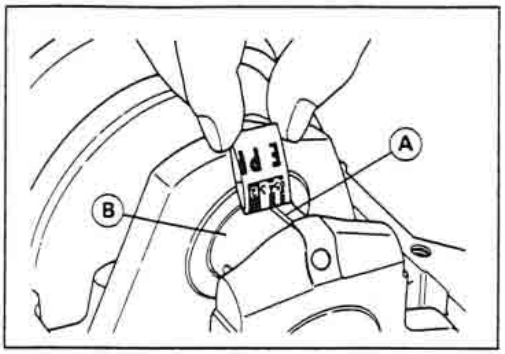

- Using a plastigage (press gauge) [A], measure the bearing insert/crankpin [B] clearance.

NOTE

- *Tighten the connecting rod big end nuts to the specified torque (see Connecting Rod Installation).*
- *Do not move the connecting rod and crankshaft during clearance measurement.*

Connecting Rod Big End Bearing Insert/Crankpin Clearance

Standard:	**0.031 ~ 0.059 mm**
Service Limit:	**0.10 mm**

★If clearance is within the standard, no bearing replacement is required.

★If clearance is between 0.059 mm and the service limit (0.10 mm), replace the bearing inserts with inserts painted black [C]. Check insert/crankpin clearance with the plastigage. The clearance may exceed the standard slightly, but it must not be less than the minimum in order to avoid bearing seizure.

★If the clearance exceeds the service limit, measure the diameter of the crankpins.

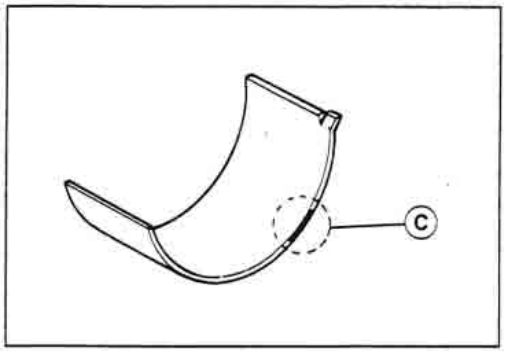

Crankpin Diameter

Standard:	**29.984 ~ 30.000 mm**
Service Limit:	**29.97 mm**

★If any crankpin has worn past the service limit, replace the crankshaft with a new one.

★If the measured crankpin diameters are not less than the service limit, but do not coincide with the original diameter markings on the crankshaft, make new marks on it.

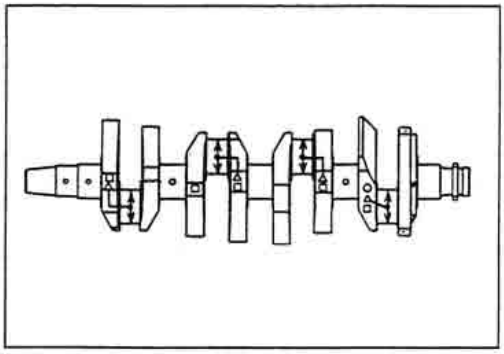

Crankpin Diameter Marks

None	**29.984 ~ 29.994 mm**
○	**29.995 ~ 30.000 mm**

△: Crankpin Diameter Marks, "○" mark or no mark.

- Measure the connecting rod big end bore diameter, and mark each connecting rod big end in accordance with the bore diameter.

Bore Diameter Mark (Around Weight Mark) [A]: "○" or no mark.

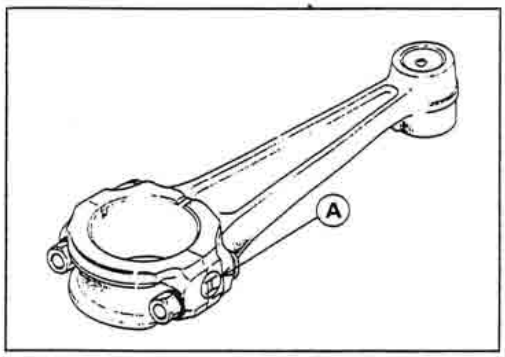

NOTE

- *Tighten the connecting rod big end nuts to the specified torque (see Connecting Rod Installation).*
- *The mark already on the big end should almost coincide with the measurement.*

Connecting Rod Big End Bore Diameter Marks

None	**33.000 ~ 33.008 mm**
○	**33.009 ~ 33.016 mm**

- Select the proper bearing insert in accordance with the combination of the connecting rod and crankshaft coding.
- Install the new inserts in the connecting rod and check insert/crankpin clearance with the plastigage.

Con-rod Big End Bore Diameter Marking	Crankpin Diameter Marking	Bearing Insert	
		Size Color	Part Number
None	○	Pink	92028-1709
None	None	Brown	92028-1494
○	○		
○	None	Black	92028-1493

Crankshaft Main Bearing Insert/Journal Wear

● Using a plastigage (press gauge) [A], measure the bearing insert/journal [B] clearance.

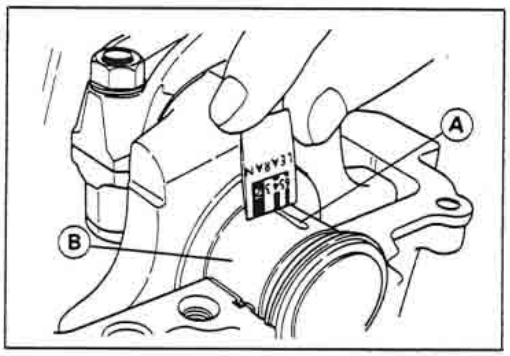

NOTE

○ *Tighten the crankcase bolts to the specified torque (see Crankcase Assembly).*
○ *Do not turn the crankshaft during clearance measurement.*
○ *Journal clearance less than 0.025 mm can not be measured by plastigage, however, using genuine parts maintains the minimum standard clearance.*

Crankshaft Main Bearing Insert/Journal Clearance
Standard: 0.014 ~ 0.038 mm
Service Limit: 0.07 mm

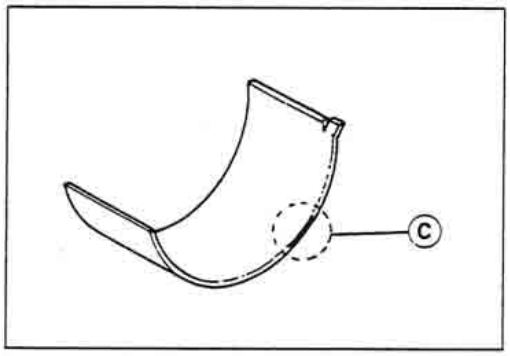

★ If clearance is within the standard, no bearing replacement is required.
★ If clearance is between 0.038 mm and the service limit (0.07 mm), replace the bearing inserts with inserts painted blue [C]. Check insert/journal clearance with the plastigage. The clearance may exceed the standard slightly, but it must not be less than the minimum in order to avoid bearing seizure.
★ If clearance exceeds the service limit, measure the diameter of the crankshaft main journal.

Crankshaft Main Journal Diameter
Standard: 29.984 ~ 30.000 mm
Service Limit: 29.96 mm

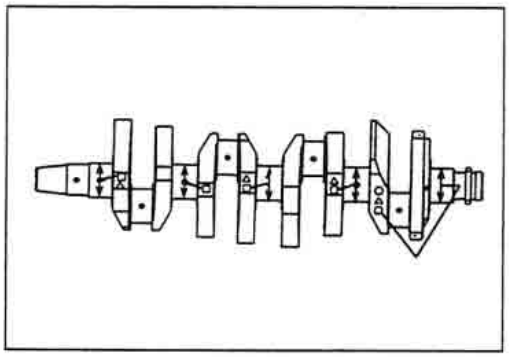

★ If any journal has worn past the service limit, replace the crankshaft with a new one.
★ If the measured journal diameters are not less than the service limit, but do not coincide with the original diameter markings on the crankshaft, make new marks on it.

Crankshaft Main Journal Diameter Marks
None 29.984 ~ 29.994 mm
1 29.995 ~ 30.000 mm

□: Crankshaft Main Journal Diameter Marks, "1" mark or no mark.

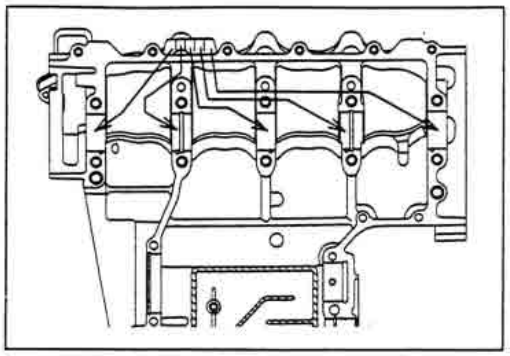

- Measure the main bearing bore diameter, and mark the upper crankcase half in accordance with the bore diameter.
  - O: Crankcase Main Bearing Bore Diameter Marks, "O" mark or no mark.

NOTE

- *Tighten the crankcase bolts to the specified torque (see Crankcase Assembly).*
- *The mark already on the upper crankcase half should almost coincide with the measurement.*

Crankcase Main Bearing Bore Diameter Marks

O	**33.000 ~ 33.008 mm**
None	**33.009 ~ 33.016 mm**

- Select the proper bearing insert in accordance with the combination of the crankcase and crankshaft coding.
- Install the new inserts in the crankcase halves and check insert/journal clearance with the plastigage.

Crankcase Main Bearing Bore Diameter Marking	Crankshaft Main Journal Diameter Marking	Bearing Insert*		
		Size Color	Part Number	Journal Nos.
O	1	Brown	92028-1770	3, 5
			92028-1773	1, 2, 4
None	1	Black	92028-1769	3, 5
O	None		92028-1772	1, 2, 4
None	None	Blue	92028-1768	3, 5
			92028-1771	1, 2, 4

*The bearing inserts for Nos. 1, 2 and 4 journals have an oil groove, respectively.

Suspension

Specifications

Item	Standard
Front Fork (per one unit):	
Fork inner tube diameter	Φ 41 mm
Air Pressure	Atmospheric pressure (Non-adjustable)
Rebound damper setting	7th click from the first click of the fully clockwise position (Usable Range: 1 ←→ 12 ~ 13 clicks)
Compression damper setting	7th click from the first click of the fully clockwise position (Usable Range: 1 ←→ 11 ~ 12 clicks)
Fork spring preload setting	Adjuster protrusion is 15 mm (6 Marks) (Usable Range: 5 ~ 20 mm)
Fork oil viscosity	KAYABA G10 (SAE10W)
Fork oil capacity	353 ± 4 mL (completely dry) approx. 300 mL (when changing oil)
Fork oil level	Fully compressed, without fork spring, below from inner tube top 160 ± 2 mm
Fork spring free length	389.9 mm (Service limit 382 mm)
Rear Shock Absorber:	
Rebound damper set	No. 2 of 4 positions
Compression damper set	12th click from the first click of the fully clockwise position (Usable Range: 1 ←→ 16 ~ 22 clicks)
Spring setting position	
Standard	Spring free length minus 14.5 mm (FR,IT) Spring free length minus 10 mm
Usable range	Spring free length minus 12.5 mm to 22.5 mm (FR,IT) Spring free length minus 8 mm to 18mm (weaker to stronger)
Gas pressure	980 kPa (10 kg/cm², 142 psi, Non-adjustable)

(FR): French Model (IT): Italian Model

Special Tools – Fork Piston Rod Puller, M10 x 1.0: 57001-1298
Fork Oil Level Gauge: 57001-1290
Fork Outer Tube Weight: 57001-1218
Fork Cylinder Holder: 57001-1297
Front Fork Oil Seal Driver: 57001-1219
Steering Stem Nut Wrenches: 57001-1100 (2)
Oil Seal & Bearing Remover: 57001-1058
Bearing Driver Set: 57001-1129
Inside Circlip Pliers: 57001-143
Jack: 57001-1238

Frame

Exploded View

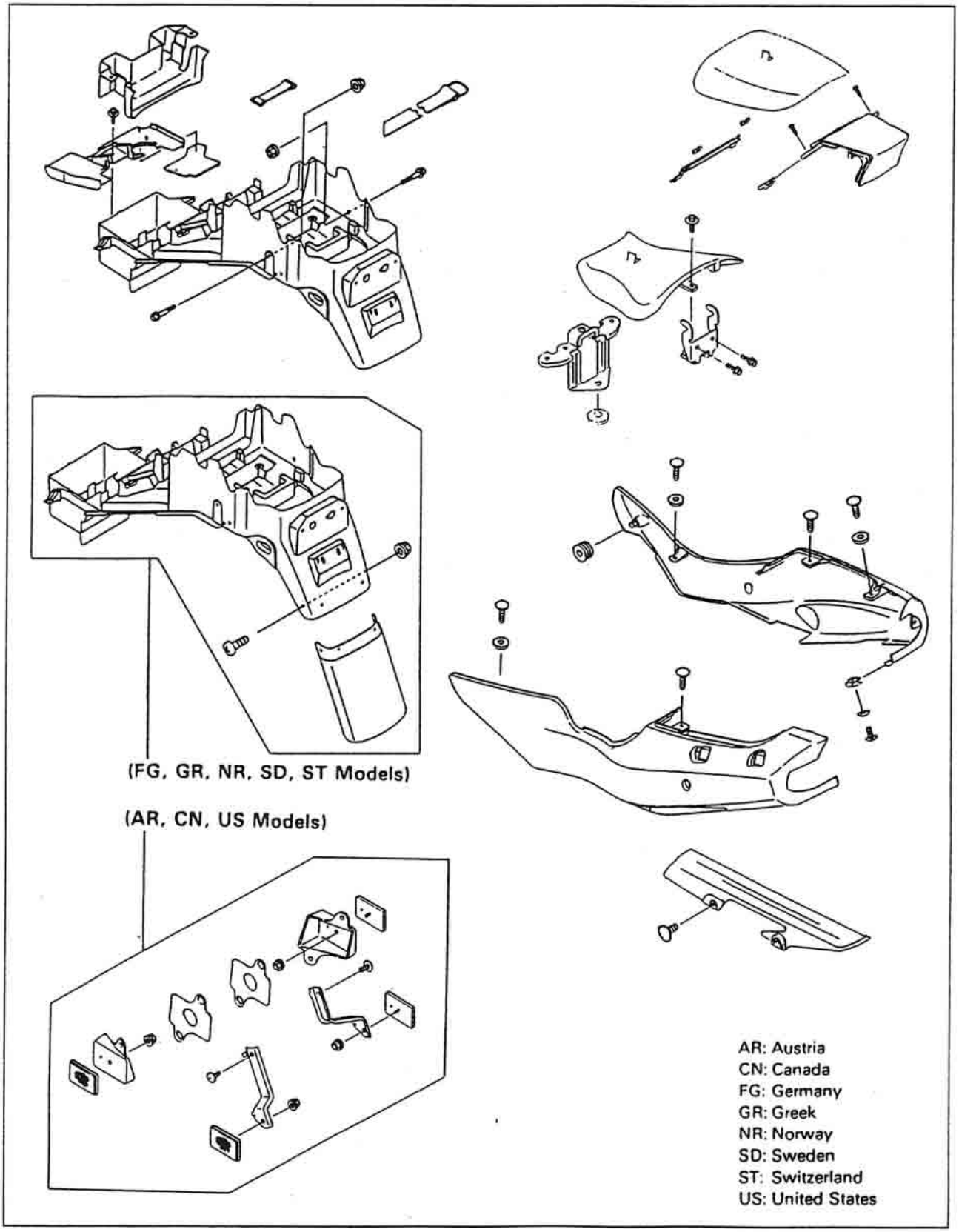

MODEL APPLICATION

Year	Model	Beginning Frame No.
1995	ZX600-F1	JKAZX4F1□SA000001, or ZX600F-000001
1996	ZX600-F2	JKAZX4F1□TA017001, or ZX600F-017001
1997	ZX600-F3	JKAZX4F1□VA030001, or ZX600F-030001

□ : This digit in the frame number changes from one machine to another.

Kawasaki

KAWASAKI HEAVY INDUSTRIES, LTD.
Consumer Products Group

Part No. 99924-1184-02

Printed in Japan