YAMAHA

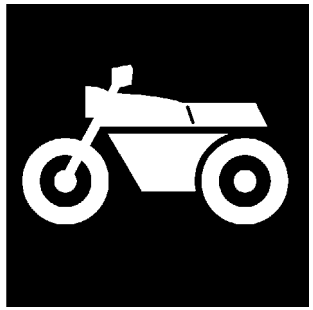

PARTS CATALOGUE
CATALOGO DE REPUESTOS

T110C (40B7) ARGENTINA

1M40B-276S1

( )

YAMAHA
GENUINE
Parts & Accessories

T110C
CATALOGO DE REPUESTOS
©2012 por Yamaha Motor Co., Ltd.
1ª edición, julio 2012
Todos los derechos reservados.
Toda reproducción o uso no autorizado
sin el consentimiento escrito de
Yamaha Motor Co., Ltd.
quedan expresamente prohibidos
Impreso en Japón.

T110C
PARTS CATALOGUE
©2012 by Yamaha Motor Co., Ltd.
1st edition, July 2012
All rights reserved.
Any reprinting or unauthorized use
without the written permission of
Yamaha Motor Co., Ltd.
is expressly prohibited.
Printed in Japan.

PROLOGO

Este catálogo de repuestos corresponde a las piezas para el o los modelos que figuran en la página de portada. Al formular el pedido de repuestos, se ruega citar este catálogo y especificar correctamente el número y el nombre de las piezas.

1. Las modificaciones y agregados que se hayan realizado después de la edición de este Catálogo de Repuestos, serán anunciados en las Informaciones de Recambios.
   Es recomendable que se hagan las correcciones necesarias en el Catálogo de Repuestos de acuerdo con las Informaciones de Recambios.

2. Abreviaciones
   En este. Catálogo de Repuestos se emplean las siguientes abreviaciones.

   "UR" Usar el número de partes especificado
   "UN" Usar la cantidad necesaria
   "AP" Piezas sustitutivas
   "LM" Fabricación local (Hay que pedir los repuestos en las cercanías)
   "F#" Nº de bastidor (Nº aplicable a la máquina)
   "O/S" Sobredimensionado

3. La cantidad de componentes para el montaje
   - Los componentes, suministrados como conjunto, se describen con un punto (.) que precede al nombre del parte como se indica a continuación.
   - La numeración que aparece a la derecha de cada descripción indica la cantidad de partes por cada unidad de conjunto.

CODIGO Nº	DESCRIPCION	CANT.	OBSERVACIONES
2F5–83310–60	ENSAMBLAJE DE LA LUZ	2	
115–83311–60	.BOMBILLA (6V–18W)	1	

4. Los colores de los componentes se indican como sigue en la columna de "OBSERVACIONES".

CODIGO Nº	DESCRIPCION	CANT.	OBSERVACIONES
2N4–24110–00–X5	COMP. DEL TANQUE	2	MXR
3J1–24240–10	.GRAFICO, DEL TANQUE	1	PARA MXR

5. Debe tenerse en cuenta que las ilustraciones sirven como guia para la búsqueda de los números de partes y no deben usarse para el montaje. Durante el montaje, se recomienda usar el manual de taller correspondiente.

6. EL asterisco (*) antes del número de referencia indica los elementos modificados después de la primera edición.

FOREWORD

This Parts Catalogue is related to the parts for the model(s) on the cover page. When you are ordering replacement parts, please refer to this Parts Catalogue and quote both part numbers and part names correctly.

1. Modifications or additions which have been made after the issue of the Parts Catalogue will be announced in the Parts News.
   It is advisable that you make the necessary corrections to the Parts Catalogue according to the Parts News.

2. Abbreviations
   The following abbreviations are used in this Parts Catalogue.

   “UR” Use specified parts number.
   “UN” Use as many as needed.
   “AP” Alternate Parts
   “LM” Locally Made (Parts need to be ordered locally)
   “F#” Frame No. (Applicable machine No.)
   “O/S” Over Size

3. The number of components for assembly
   - Parts, which are to be supplied in an assembly, are listed with a dot (.) in front of the part name as shown below.
   - The numeral appearing to the right of each component part indicates the quantity of parts for each assembly unit.

PART NO.	DESCRIPTION	Q’TY	REMARKS
2F5–83310–60	FRONT FLASHER LIGHT ASSY	2	
115–83311–60	.BULB (6V–18W)	1	

4. Applicable colours of graphics are represented in the “REMARKS” as shown below.

PART NO.	DESCRIPTION	Q’TY	REMARKS
2N4–24110–00–X5	FUEL TANK COMP.	2	MXR
3J1–24240–10	.GRAPHIC, FUEL TANK	1	FOR MXR

5. Note that the illustrations for reference in finding parts numbers are not to be used for assembling. When assembling, please use the applicable service manual.

6. The asterisk (*) before a reference number indicates modified items after the first edition.

7. Números de serie

Nº de Serie del bastidor

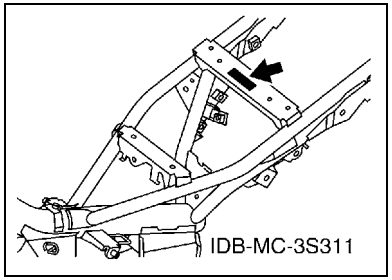

Nº de Serie del motor

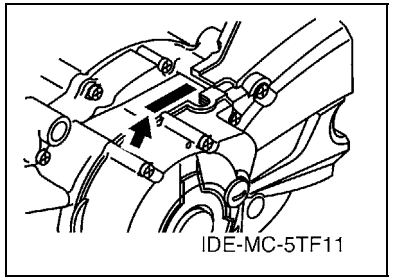

8. Códigos de color aplicables (El símbolo (*) muestra el color de modelo.)

Abreviatura	Nombre de color	Código de color
BS4	BLUISH SILVER 4	0820
CIS	CIRCUIT SILVER	00WN
DPBMC(*)	DEEP PURPLISH BLUE METALLIC C	0564
DRMK(*)	DEEP RED METALLIC K	0918
SMX(*)	BLACK METALLIC X	0903
YB	YAMAHA BLACK	0033

9. Nº de serie inicial aplicable

Nº de Serie del bastidor

Nº de serie	Nombre de la columna de cantidades	Código de Modelo

Nº de Serie del motor

Nº de serie	Nombre de la columna de cantidades	Código de Modelo

7. Applicable Serial No.

Frame Serial No.

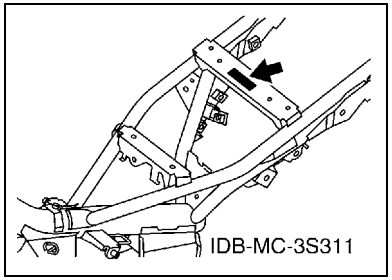

Engine Serial No.

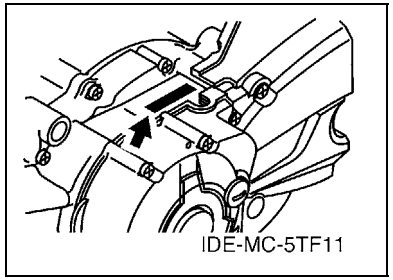

8. Applicable Colour Code (The (*) mark shows Model colour.)

Abbreviation	Colour Name	Colour Code
BS4	BLUISH SILVER 4	0820
CIS	CIRCUIT SILVER	00WN
DPBMC(*)	DEEP PURPLISH BLUE METALLIC C	0564
DRMK(*)	DEEP RED METALLIC K	0918
SMX(*)	BLACK METALLIC X	0903
YB	YAMAHA BLACK	0033

9. Applicable Starting Serial No.

Frame Serial No.

Serial No.	Name Of Q'ty Column	Model Code

Engine Serial No.

Serial No.	Name Of Q'ty Column	Model Code

CONTENIDO

MOTOR

CULATA DE CILINDRO 1
CIGUENAL & PISTON 2
VALVULA 3
ARBOL DE LEVAS & CADENA 4
BOMBA DE ACEITE 5
ADMISION 6
CARBURADOR 7
DESCARGA 9
CARTER 10
CUBIERTA DE CARTER 1 11
ARRANQUE 12
EMBRAGUE DEL ARRANQUE 13
EMBRAGUE 14
TRANSMISION 16
LEVA DE CAMBIO & HORQUILLA 17
EJE DE CAMBIO & PEDAL 18

SHASIS

CUADRO 19
GUARDABARRO 20
CUBIERTA LATERAL 21
BRAZO TRASERO & SUSPENSION 22
DIRECCION 23
HORQUILLA DELANTERA 25
DEPOSITO DE COMBUSTIBLE 27
ASIENTO 28
RUEDA DELANTERA 29
CALIBRE FRENO DELANTERA 30
RUEDA TRASERA 31
MANILLAR & CABLE 33
CILINDRO MAESTRO DELANTERO 34
SOPORTE & APOYAPIE 35
PATA PROTEGIDA 37
GENERADOR 39
MOTOR DE ARRANQUE 40
LUZ DE DESTELLADOR 41
MEDIDOR 42
FARO DELANTERO 43
LUZ DE COLA 44
INTERRUPTOR DE MANILLAR&PALANC 45
EQUIPO ELECTRICO 1 46
EQUIPO ELECTRICO 2 47

INDICE

INDICE NUMERICO 48

CONTENTS

ENGINE

CYLINDER HEAD 1
CRANKSHAFT & PISTON 2
VALVE 3
CAMSHAFT & CHAIN 4
OIL PUMP 5
INTAKE 6
CARBURETOR 7
EXHAUST 9
CRANKCASE 10
CRANKCASE COVER 1 11
STARTER 12
STARTER CLUTCH 13
CLUTCH 14
TRANSMISSION 16
SHIFT CAM & FORK 17
SHIFT SHAFT 18

CHASSIS

FRAME 19
FENDER 20
SIDE COVER 21
REAR ARM & SUSPENSION 22
STEERING 23
FRONT FORK 25
FUEL TANK 27
SEAT 28
FRONT WHEEL 29
FRONT BRAKE CALIPER 30
REAR WHEEL 31
STEERING HANDLE & CABLE 33
FRONT MASTER CYLINDER 34
STAND & FOOTREST 35
LEG SHIELD 37
GENERATOR 39
STARTING MOTOR 40
FLASHER LIGHT 41
METER 42
HEADLIGHT 43
TAILLIGHT 44
HANDLE SWITCH & LEVER 45
ELECTRICAL 1 46
ELECTRICAL 2 47

INDEX

NUMERICAL INDEX 48

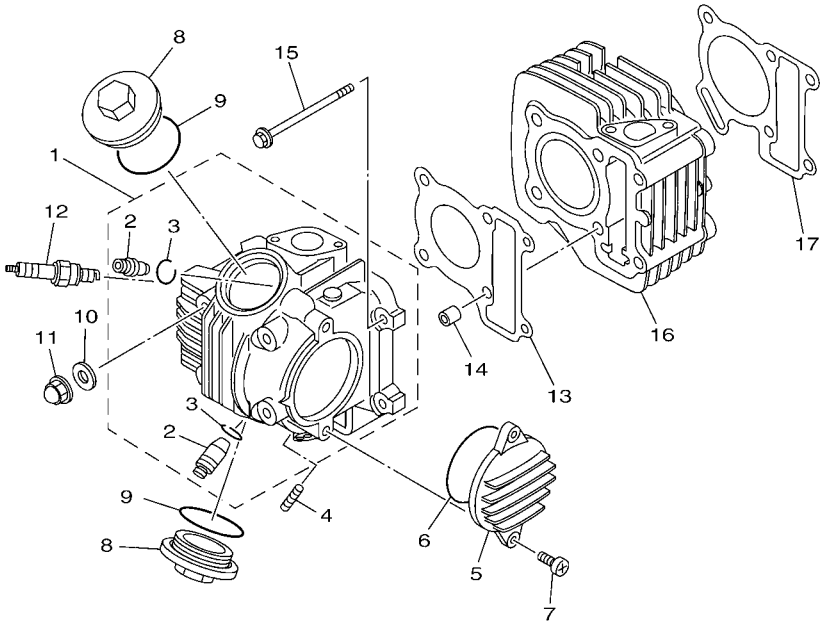

40B1516-G010

FIG. 1 CULATA DE CILINDRO CYLINDER HEAD

REF. Nº	CODIGO Nº PART NO.	DESCRIPCION DESCRIPTION	40B7					OBSERVACIONES REMARKS
1	4S9–E1111–10	CULATA CILINDRO 1 HEAD, CYLINDER 1	1					
2	4ST–11134–11	.GUIA DE VALVULA 2 .GUIDE, VALVE 2	2					
3	93440–10153	.SEGURO .CIRCLIP	2					
4	90116–06820	ESPARRAGO BOLT, STUD	2					
5	4S9–E1185–00	CUBIERTA CULATA CIL.LAT.3 COVER, CYLINDER HEAD SIDE 3	1					
6	93210–62802	ANILLO O O-RING	1					
7	98502–06016	TORNILLO SCREW, PAN HEAD	2					
8	5WB–E1186–00	CUBIERTA CULATA CIL.LAT.2 COVER, CYLINDER HEAD SIDE 2	2					
9	93210–44807	ANILLO O O-RING	2					
10	90201–08827	ARANDELA PLANA WASHER, PLATE	4					
11	90176–08812	TUERCA CORONA NUT, CROWN	4					
12	94700–00869	BUJIA (NGK CR6HSA) PLUG SPARK (NGK CR6HSA)	1					
13	4S9–E1181–00	JUNTA, DE CULATA 1 GASKET, CYLINDER HEAD 1	1					
14	99530–10114	PASADOR, DE ESPIGA PIN, DOWEL	2					
15	95022–06090	PERNO, DE BRIDA BOLT, FLANGE	2					
16	4S9–E1310–00–B0	CILINDRO CYLINDER	1					
17	4S9–E1351–00	JUNTA, DE CILINDRO GASKET, CYLINDER	1					

FIG. 2 CIGUENAL & PISTON — CRANKSHAFT & PISTON

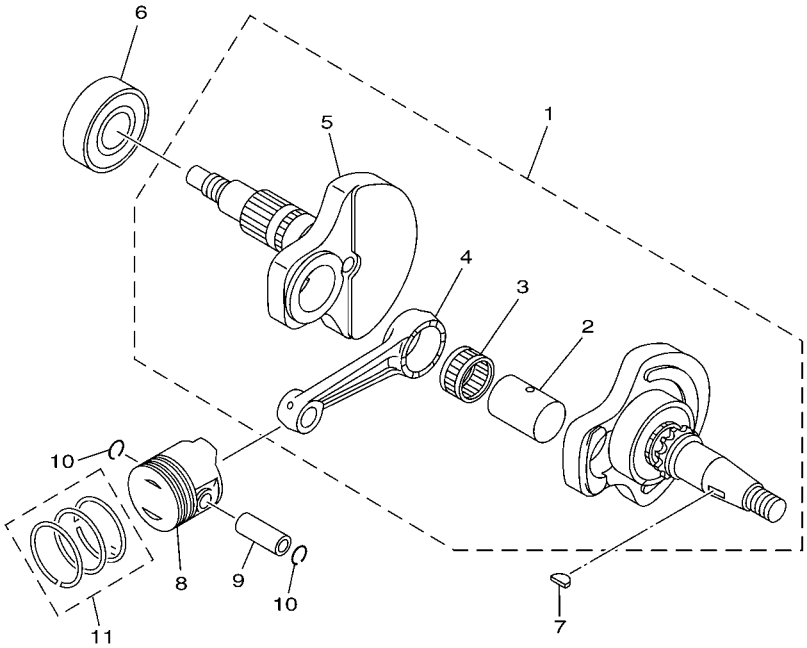

4S91415-F020

REF. Nº	CODIGO Nº PART NO.	DESCRIPCION DESCRIPTION	40B7					OBSERVACIONES REMARKS
1	4S9–WE140–00	CIGUENAL COMPLETO CRANKSHAFT ASSY	1					
2	4S9–E1681–00	.PASADOR MANIVELA 1 .PIN, CRANK 1	1					
3	93310–526Y6	.COJINETE DE RODILLOS .BEARING	1					
4	4S9–E1651–00	.BIELA .ROD, CONNECTING	1					
5	4S9–E1422–00	.MANIVELA 2 .CRANK 2	1					
6	93306–205YP	COJINETE BEARING	1					
7	90280–03017	CUNA WOODRUFF KEY, WOODRUFF	1					
8	4S9–E1631–10–A0	PISTON (NORMA) PISTON (STD)	1					
9	5WB–E1633–00	PASADOR, PISTON PIN, PISTON	1					
10	93450–14088	SEGURO CIRCLIP	2					
11	4S9–E1603–20	JUEGO DE ANILLOS (NORMA) PISTON RING SET (STD)	1					

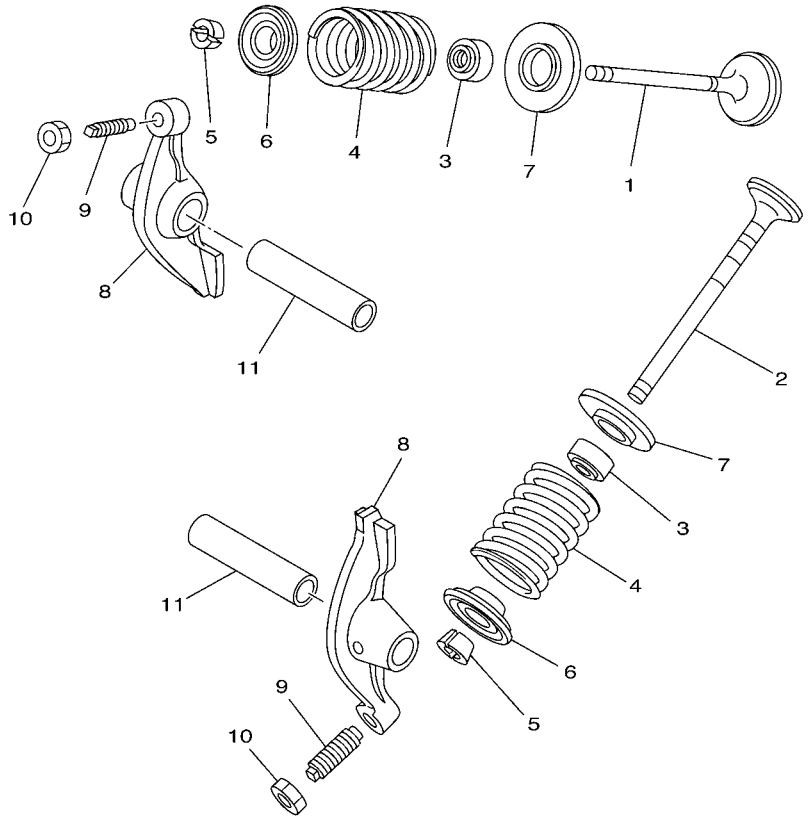

4ST1460-6030

FIG. 3 VALVULA VALVE

REF. Nº	CODIGO Nº PART NO.	DESCRIPCION DESCRIPTION	40B7					OBSERVACIONES REMARKS
1	4S9–E2111–00	VALVULA DE ADMISION VALVE, INTAKE	1					
2	4S9–E2121–00	VALVULA DE ESCAPE VALVE, EXHAUST	1					
3	4S9–E2119–00	SELLO DE ACEITE VALVULA SEAL, VALVE STEM	2					
4	4S9–E2114–00	RESORTE VALVULA EXTERIOR SPRING, VALVE OUTER	2					
5	4S9–E2118–00	SEGURO DE VALVULA COTTER, VALVE	4					
6	4S9–E2117–00	RETEN RESORTE DE VALVULA RETAINER, VALVE SPRING	2					
7	4S9–E2126–00	ASIENTO RESORTE DE VALVULA2 SEAT, VALVE SPRING 2	2					
8	4S9–E2151–00	BRAZO DE BALANCIN DE VALVULA ARM, VALVE ROCKER	2					
9	5WB–E2159–00	TORNILLO DE AJUSTE DE VALVULA SCREW, VALVE ADJUSTING	2					
10	90170–05302	TUERCA NUT	2					
11	5WB–E2156–00	EJE DE BALANCIN SHAFT, ROCKER 2	2					

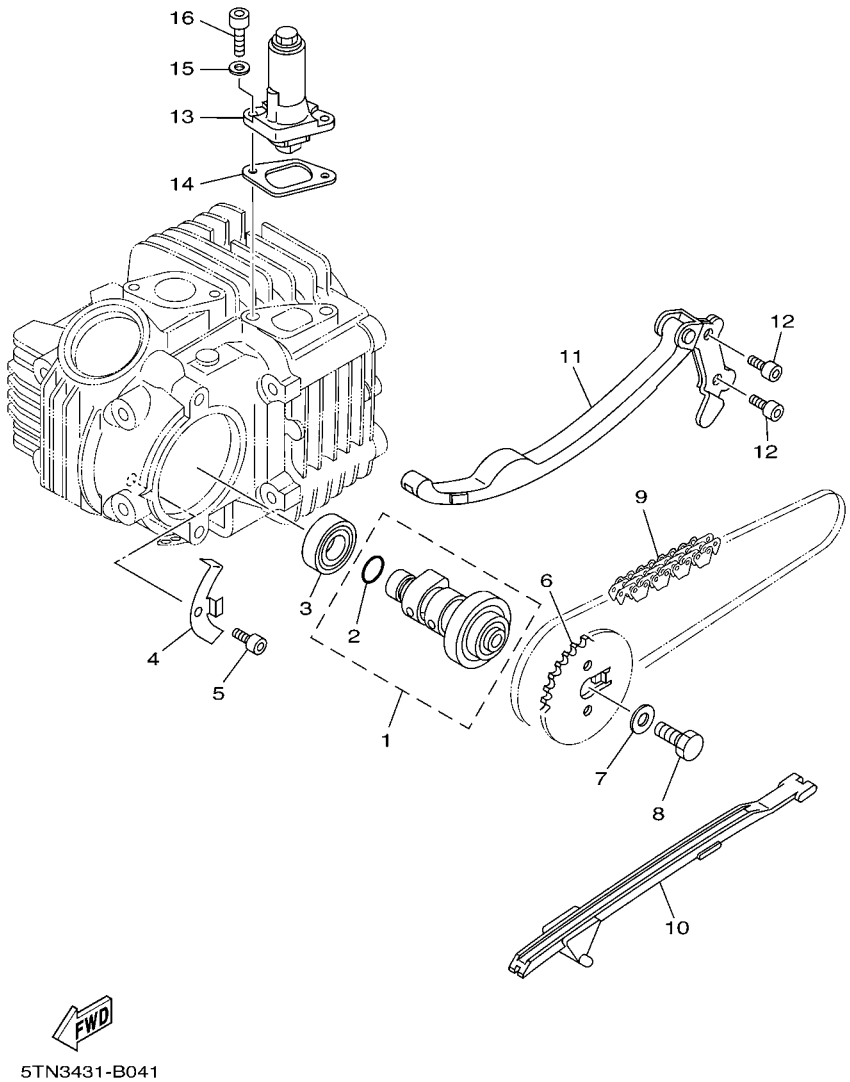

FIG. 4 ARBOL DE LEVAS & CADENA CAMSHAFT & CHAIN

REF. Nº	CODIGO Nº PART NO.	DESCRIPCION DESCRIPTION	40B7					OBSERVACIONES REMARKS
1	4S9–E2170–10	ARBOL DE LEVAS COMPLETO 1 CAMSHAFT ASSY 1	1					
2	93210–108B1	.ANILLO O .O-RING	1					
3	93306–002X9	COJINETE BEARING	1					
4	4S9–E111F–00	PLACA PLATE	1					
5	91312–06012	TORNILLO BOLT	1					
6	4S9–E2176–00	CATALINA DE CADENA SPROCKET, CAM CHAIN	1					
7	90201–08824	ARANDELA PLANA WASHER, PLATE	1					
8	90101–08820	TORNILLO BOLT	1					
9	94568–F2086	CADENA CHAIN	1					
10	4S9–E2231–00	TOPE DE GUIA 1 GUIDE, STOPPER 1	1					
11	4S9–E2241–00	TOPE DE GUIA 2 GUIDE, STOPPER 2	1					
12	91312–06016	TORNILLO BOLT	2					
13	5WB–E2210–00	TENSOR CADENA DE LEVA TENSIONER ASSY, CAM CHAIN	1					
14	5WB–E2213–10	EMPAQUE DE CAJA TENSOR GASKET, TENSIONER CASE	1					
15	90430–06817	JUNTA GASKET	2					
16	91312–06018	TORNILLO BOLT	2					

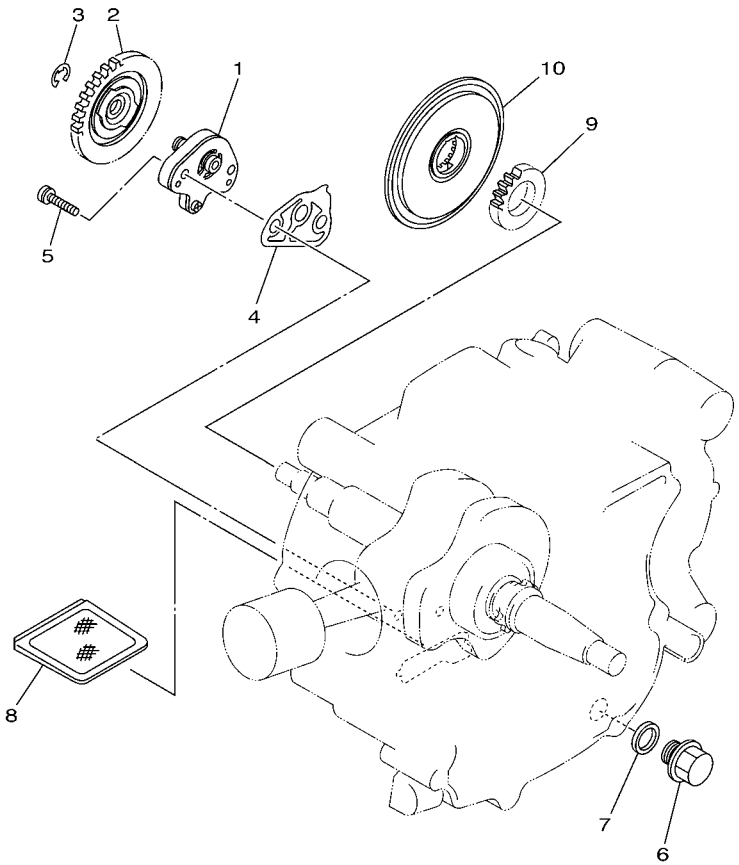

5TN1431-B050

FIG. 5 BOMBA DE ACEITE OIL PUMP

REF. Nº	CODIGO Nº PART NO.	DESCRIPCION DESCRIPTION	40B7					OBSERVACIONES REMARKS
1	4S9–E3104–00	SUBENSAMBLE BOMBA DE ACETE OIL PUMP SUB ASSY	1					
2	4S9–E3325–00	ENGRANAJE IMPULSOR DE BOMBA 1 GEAR, PUMP DRIVEN	1					
3	93430–05826	SEGURO CIRCLIP	1					
4	4S9–E3329–00	EMPAQUE TAPA DE BOMBA GASKET, PUMP COVER	1					
5	90155–06801	TORNILLO CABEZA PLANA RAN. SCREW, FLAT FILLISTER	2					
6	90340–12806	TORNILLO, DE DRENAJE PLUG, STRAIGHT SCREW	1					
7	90430–12227	JUNTA GASKET	1					
8	4S9–E3411–00	FILTRO DE ACEITE STRAINER, OIL	1					
9	4S9–E3324–00	ENGRANAJE TRACC. DE BOMBA GEAR, PUMP DRIVE	1					
10	4S9–E3451–00	FILTRE ROTATIVO FILTER,ROTARY	1					

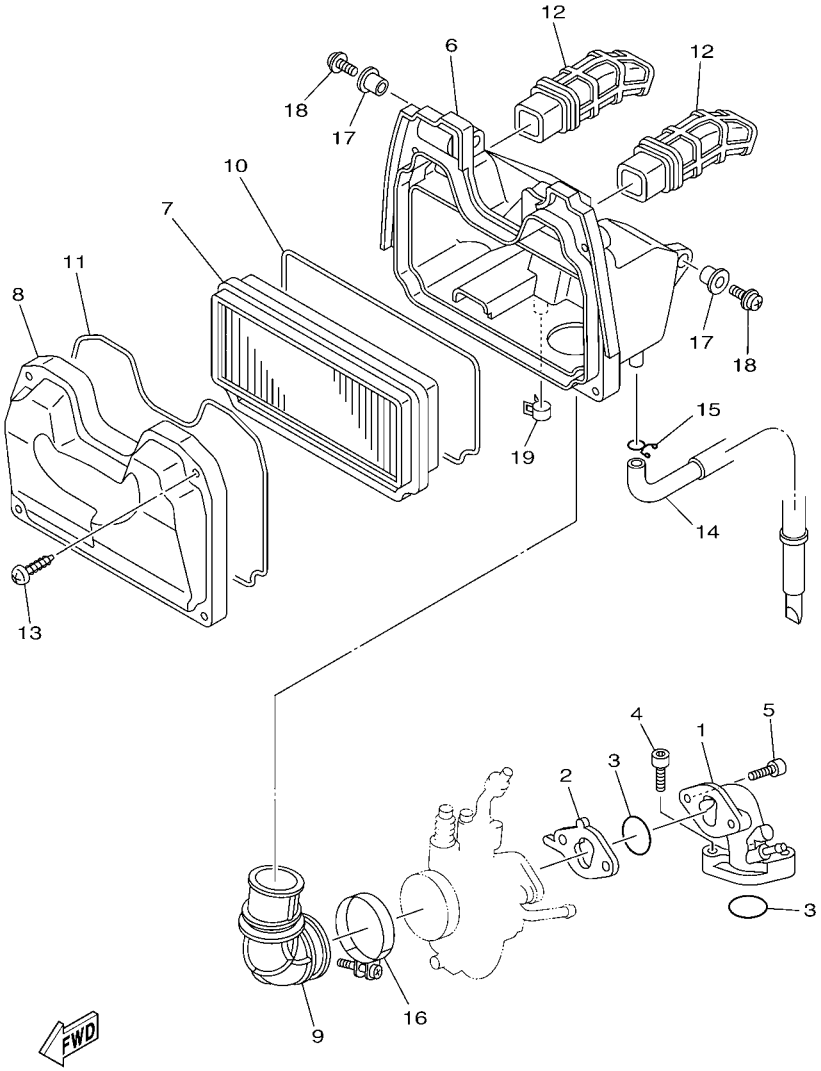

40B4276-L060

FIG. 6 ADMISION INTAKE

REF. Nº	CODIGO Nº PART NO.	DESCRIPCION DESCRIPTION	40B7					OBSERVACIONES REMARKS
1	4S9–E3586–20	TOBERA DE CARBURADOR 1 JOINT, CARBURETOR 1	1					
2	4S9–E3595–00	TOBERA JOINT	1					
3	93210–25809	ANILLO O O-RING	2					
4	91312–06025	TORNILLO BOLT	2					
5	91312–06025	TORNILLO BOLT	2					
6	4S9–E4411–10	CAJA FILTRO DEL AIRE 1 CASE, AIR CLEANER 1	1					
7	4S9–E4451–01	ELEMENTO DEL FILTRO DEL AIRE ELEMENT, AIR CLEANER	1					
8	4S9–E4412–00	TAPA CAJA DEL FILTRO 1 CAP, CLEANER CASE 1	1					
9	4S9–E4453–00	UNION DEL FILTRO DEL AIRE 1 JOINT, AIR CLEANER 1	1					
10	4S9–E4457–00	SELLO SEAL	1					
11	4S9–E4452–00	SELLO SEAL	1					
12	4S9–E4423–00	TUBO DE SUCCION 1 PIPE, SUCTION 1	2					
13	97702–50030	TORNILLO ROSCA HEMBRA SCREW, TAPPING	4					
14	4S9–E443E–00	TUBO, DRENAJE PIPE, DRAIN	1					
15	90467–110A3	PRESILLA CLIP	1					
16	90450–43802	BRIDA, MANGUERA HOSE CLAMP ASSY	1					
17	90387–068K3	ESPACIADOR COLLAR	2					
18	95802–06020	TORNILLO DE REBORDE BOLT, FLANGE	2					
19	90467–13800	PRESILLA CLIP	1					

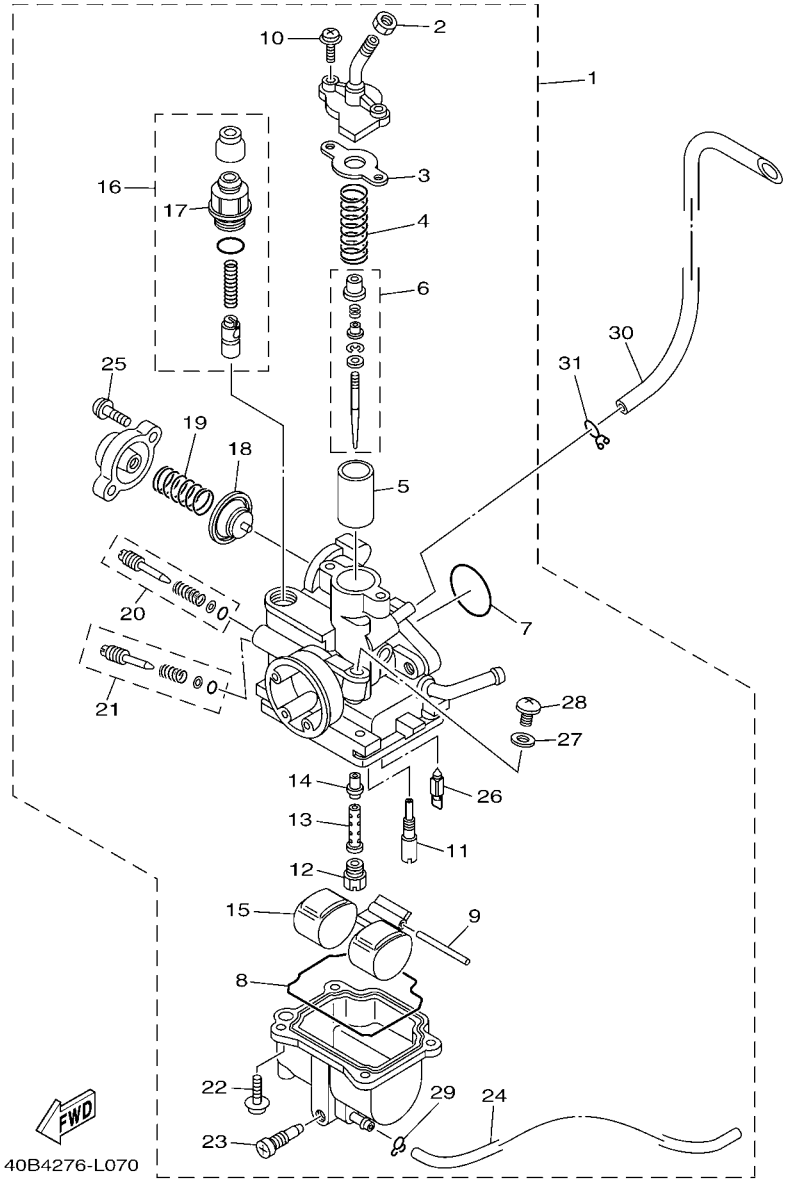

FIG. 7 CARBURADOR CARBURETOR

REF. Nº	CODIGO Nº PART NO.	DESCRIPCION DESCRIPTION	40B7					OBSERVACIONES REMARKS
1	4S9–E4101–01	CARBURADOR COMPLETO 1 CARBURETOR ASSY 1	1					
2	802–14161–00	.TUERCA AJUSTADOR DE CABLE .NUT, CABLE ADJUSTING	1					
3	4NM–14198–00	.EMPAQUE .GASKET	1					
4	5TN–14131–00	.RESORTE VALVULA DE ACELERACION .SPRING, THROTTLE VALVE	1					
5	5TN–14112–00	.VALVULA DE ACELERACION 1 .VALVE, THROTTLE 1	1					
6	4S9–1490J–00	.CJTO. AGUJA .NEEDLE SET	1					
7	5TN–14147–00	.ANILLO O .O-RING	1					
8	4GL–14239–00	.SELLO .SEAL	1					
9	353–14186–00	.PASADOR DE LA BOYA .PIN, FLOAT	1					
10	97607–04112	.TORNILLO CAB CON PLANA C/ARAN .SCREW,WITH WASHER	2					
11	2MM–14142–17	.SURTIDOR DE RALENTI (# 17.5) .JET, PILOT (# 17.5)	1					
12	18A–14143–21	.SURTIDOR, PRINCIPAL (#105) .JET, MAIN (#105)	1					
13	5TN–14148–00	.TUBO .PIPE	1					
14	4S9–14141–18	.BOQUILLA PRINCIPAL .NOZZLE, MAIN	1					
15	4GL–14185–00	.BOYA .FLOAT	1					
16	5TN–1410A–10	.JUEGO DE ARRANQUE .STARTER SET	1					
17	3RW–14174–00	..TAPA DE EMBOLO ..CAP, PLUNGER	1					
18	5TN–14940–00	.DIAFRAGMA COMPLETO .DIAPHRAGM ASSY	1					
19	5TN–24423–10	.RESORTE DE DIAFRAGMA .SPRING, DIAPHRAGM	1					
20	4GL–14104–00	.CJTO. TORNNILLO DE AIRE .AIR SCREW SET	1					
21	5TN–14103–00	.CJTO. TORNILLO DEL RALENTI .THROTTLE SCREW SET	1					
22	97607–04114	.TORNILLO CAB CON PLANA C/ARAN .SCREW,WITH WASHER	4					
23	5LW–14191–00	.TORNILLO, DE DRENAJE .PLUG, DRAIN	1					
24	32N–14196–00	.TUBO DE DRENASE .PIPE, OVER FLOW 1	1					
25	5TN–14216–00	.TORNILLO .SCREW	2					
26	5TN–14150–10	.AGUJA DEL CARB. .NEEDLE ASSY	1					
27	256–14956–01	.ARANDELA .WASHER	1					

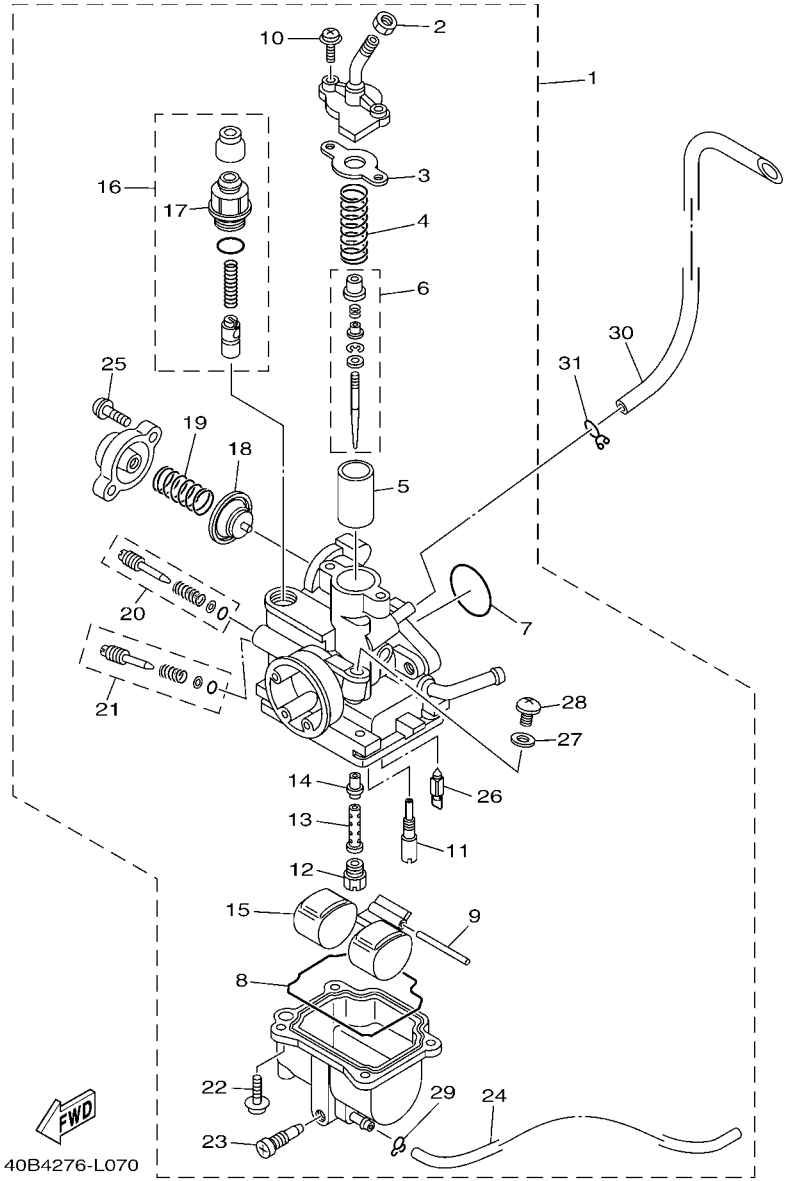

FIG. 7 CARBURADOR CARBURETOR

REF. Nº	CODIGO Nº PART NO.	DESCRIPCION DESCRIPTION	40B7					OBSERVACIONES REMARKS
28	3DM–14216–00	.TORNILLO .SCREW	1					
29	22F–14139–00	.PRESILLA TUBO .CLIP, PIPE	1					
30	4S9–E4197–00	TUBO RESPIRADERO PIPE	1					
31	90467–07029	PRESILLA CLIP	1					

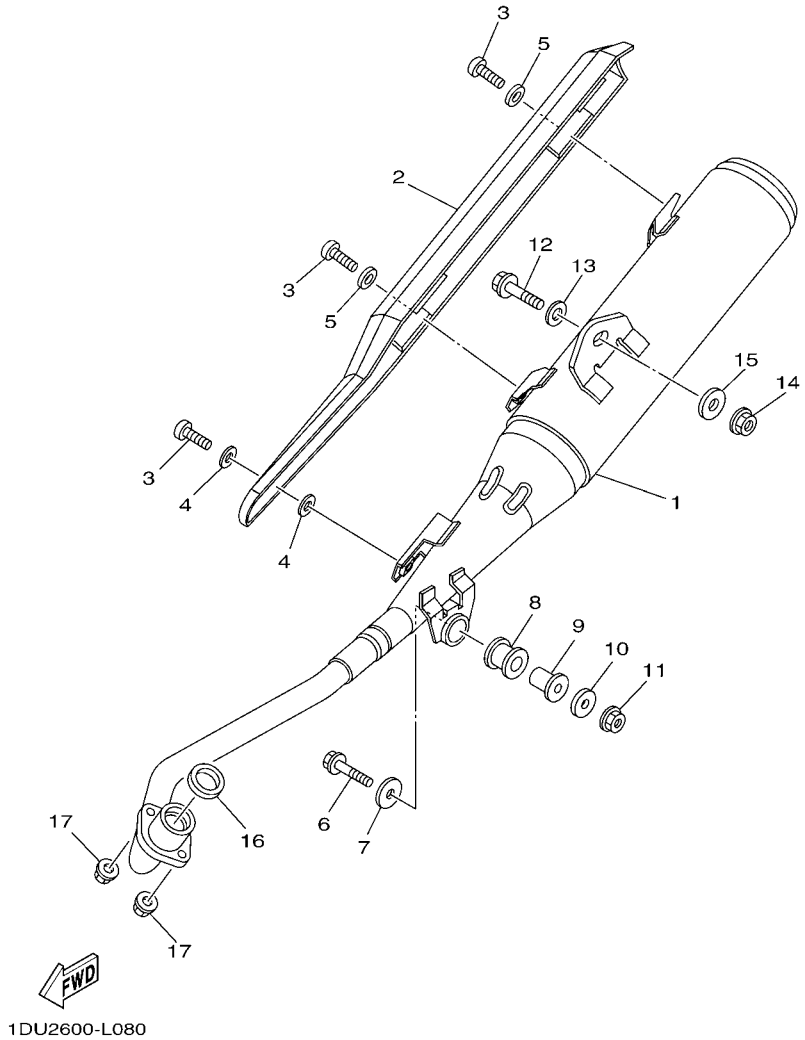

FIG. 8 DESCARGA EXHAUST

REF. Nº	CODIGO Nº PART NO.	DESCRIPCION DESCRIPTION	40B7					OBSERVACIONES REMARKS
1	1DU–E4711–00	SILENCIADOR 1 MUFFLER 1	1					
2	4S9–E4718–01	PROTECTOR DE SILENCIADOR 1 PROTECTOR, MUFFLER 1	1					
3	98980–06012	TORNILLO DE LIGAR SCREW, BIND	3					
4	4S9–E4766–00	ARANDELA DE PROTECTOR WASHER, PROTECTOR	2					
5	90201–06078	ARANDELA PLANA WASHER, PLATE	2					
6	95802–08045	TORNILLO DE REBORDE BOLT, FLANGE	1					
7	90201–088C4	ARANDELA PLANA WASHER, PLATE	1					
8	4S9–E4747–10	AMORTIGUADOR DE SILENCIADOR DAMPER, MUFFLER	1					
9	90387–10817	ESPACIADOR COLLAR	1					
10	90201–08870	ARANDELA PLANA WASHER, PLATE	1					
11	95702–08500	TUERCA DE BRIDA NUT, FLANGE	1					
12	95822–10045	TORNILLO DE REBORDE BOLT, FLANGE	1					
13	92902–10200	ARANDELA WASHER	1					
14	95702–10500	TUERCA DE BRIDA NUT, FLANGE	1					
15	90201–10669	ARANDELA PLANA WASHER, PLATE	1					
16	4S9–E4613–00	JUNTA, TUBO DE ESCAPE GASKET, EXHAUST PIPE	1					
17	95702–06500	TUERCA DE BRIDA NUT, FLANGE	2					

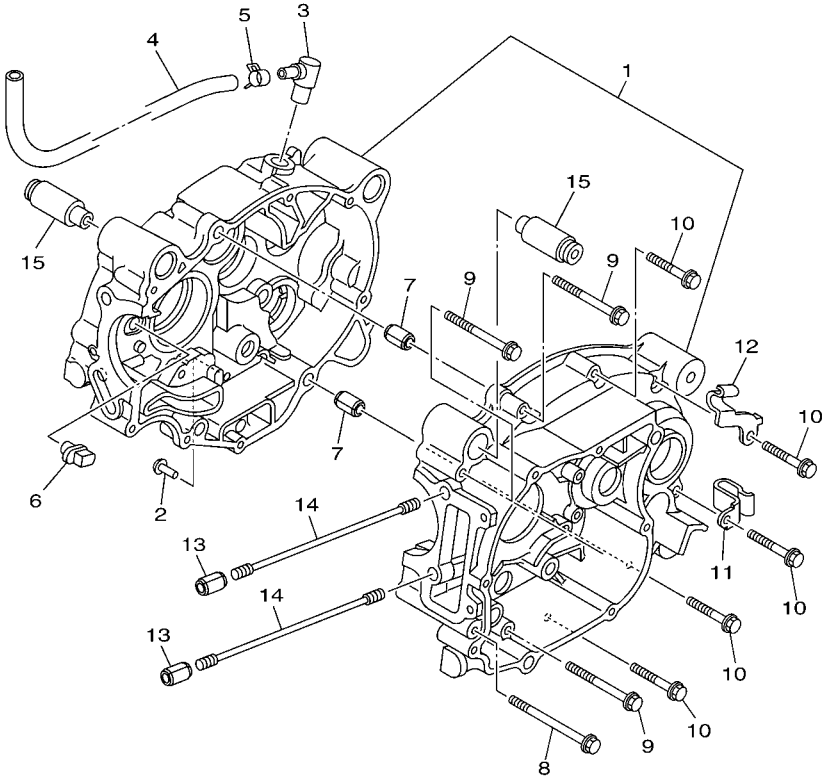

1DU1600-J090

FIG. 9 CARTER — CRANKCASE

REF. Nº	CODIGO Nº PART NO.	DESCRIPCION DESCRIPTION	40B7					OBSERVACIONES REMARKS
1	4S9–E5150–00	CARTER COMPLETO CRANKCASE ASSY	1					
2	4S9–E6346–01	GANCHO DE RESORTE HOOK, SPRING	1					
3	4S9–E5371–00	RESPIRADERO BREATHER	1					
4	4S9–E1166–00	TUBO RESPIRADERO 1 PIPE, BREATHER 1	1					
5	90467–13064	PRESILLA CLIP	1					
6	4S9–E5155–00	BOQUILLA 3 NOZZLE 3	1					
7	99530–10114	PASADOR, DE ESPIGA PIN, DOWEL	2					
8	95022–06080	PERNO, DE BRIDA BOLT, FLANGE	1					
9	95022–06060	PERNO, DE BRIDA BOLT, FLANGE	3					
10	95022–06040	PERNO, DE BRIDA BOLT, FLANGE	5					
11	90465–10833	BRIDA CLAMP	1					
12	90462–10801	BRIDA CLAMP	1					
13	99530–10114	PASADOR, DE ESPIGA PIN, DOWEL	2					
14	90116–08824	ESPARRAGO BOLT, STUD	4					
15	4S9–E5316–00	AMORTIGUADOR 1 DAMPER 1	2					

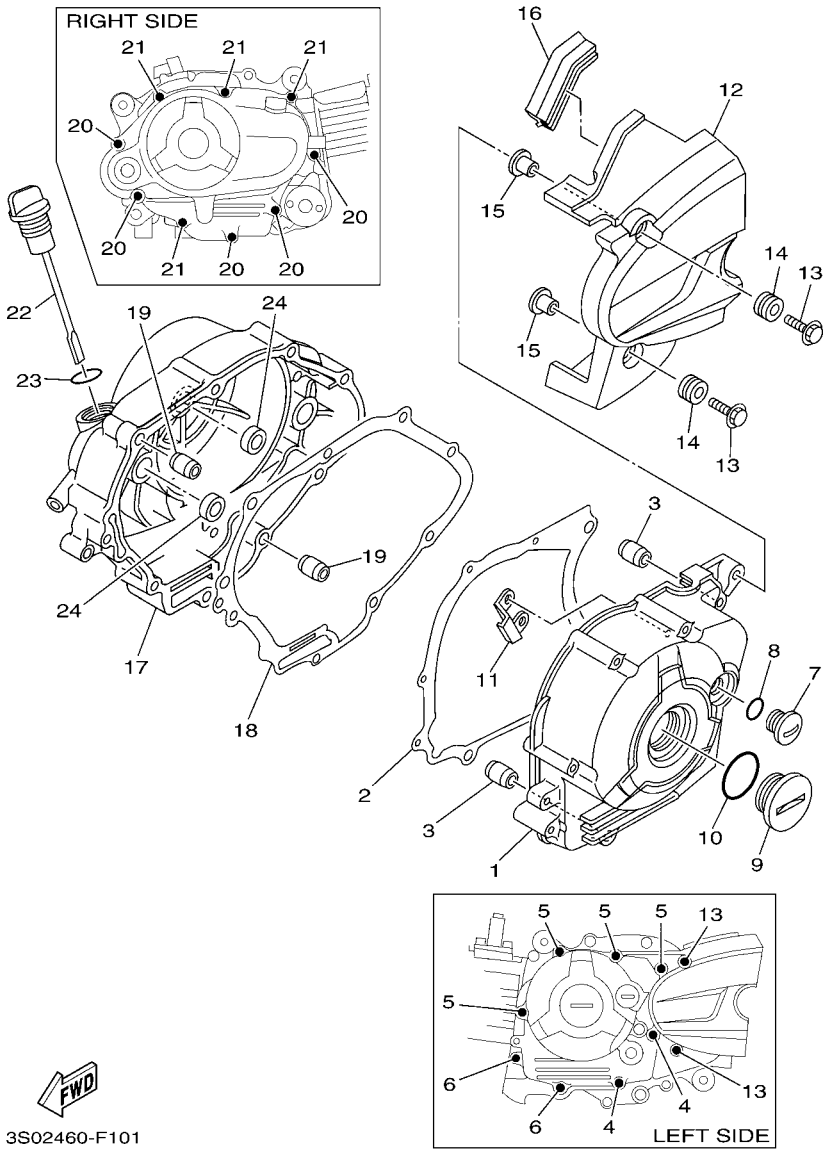

FIG. 10 CUBIERTA DE CARTER 1 CRANKCASE COVER 1

REF. Nº	CODIGO Nº PART NO.	DESCRIPCION DESCRIPTION	40B7					OBSERVACIONES REMARKS
1	4S9–E5411–00	CUBIERTA DE CARTER 1 COVER, CRANKCASE 1	1					
2	4S9–E5451–00	EMPAQ DE CUBIERTA DE CARTER GASKET, CRANKCASE COVER 1	1					
3	99530–10114	PASADOR, DE ESPIGA PIN, DOWEL	2					
4	95022–06040	PERNO, DE BRIDA BOLT, FLANGE	2					
5	95022–06050	PERNO, DE BRIDA BOLT, FLANGE	4					
6	95022–06080	PERNO, DE BRIDA BOLT, FLANGE	2					
7	90340–14818	TORNILLO, DE DRENAJE PLUG, STRAIGHT SCREW	1					
8	93210–14899	ANILLO O O-RING	1					
9	90340–32813	TORNILLO, DE DRENAJE PLUG, STRAIGHT SCREW	1					
10	93210–328A4	ANILLO O O-RING	1					
11	4S9–E5113–00	PLACA PLATE	1					
12	4S9–E5418–00	CUBIERTA CAJA DE CADENA COVER, CHAIN CASE	1					
13	95802–06025	TORNILLO DE REBORDE BOLT, FLANGE	2					
14	90480–13568	TAPON GROMMET	2					
15	90387–06063	ESPACIADOR COLLAR	2					
16	4S9–E5492–00	CUBIERTA COVER	1					
17	4S9–E5421–00	TAPA DE CARTER DERECHA COVER, CRANKCASE 2	1					
18	4S9–E5461–00	JUNTA TAPA CARTER DERECHO 2 GASKET, CRANKCASE COVER 2	1					
19	99530–10114	PASADOR, DE ESPIGA PIN, DOWEL	2					
20	95022–06040	PERNO, DE BRIDA BOLT, FLANGE	5					
21	95022–06050	PERNO, DE BRIDA BOLT, FLANGE	4					
22	4S9–E5362–00	TAPON DEL NIVEL DE ACEITE PLUG, OIL LEVEL	1					
23	93210–19809	ANILLO O O-RING	1					
24	93101–10800	SELLO ACEITE OIL SEAL	2					

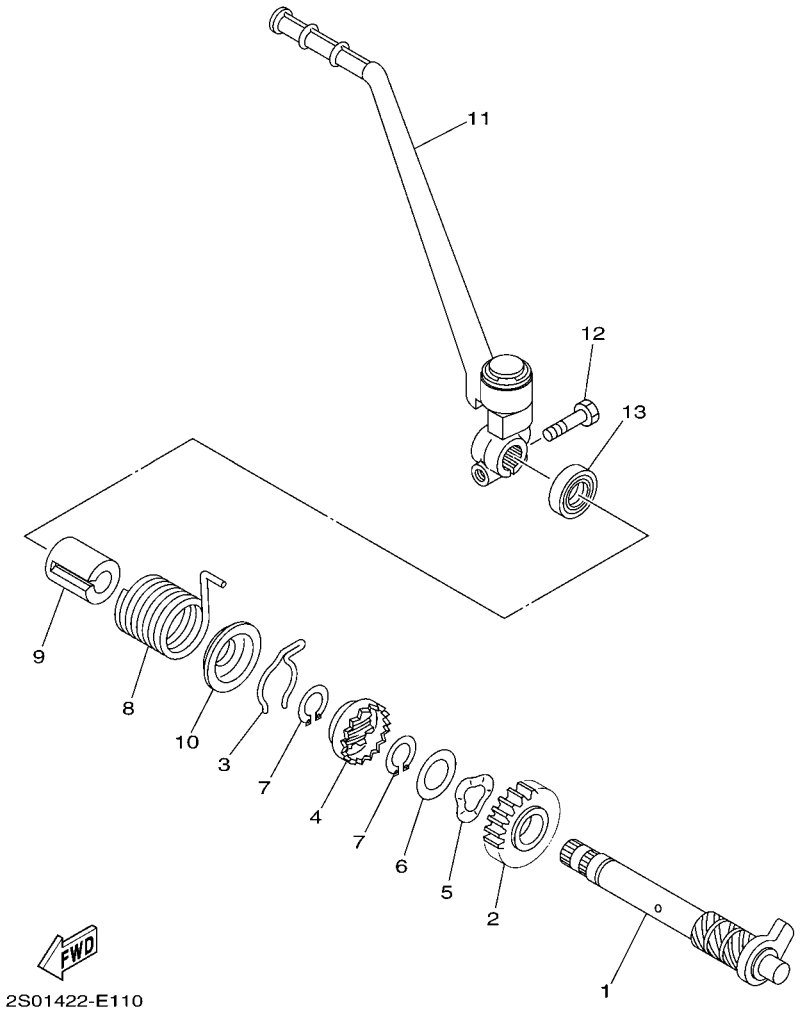

FIG. 11 ARRANQUE STARTER

REF. Nº	CODIGO Nº PART NO.	DESCRIPCION DESCRIPTION	40B7					OBSERVACIONES REMARKS
1	4S9–E5660–00	EJE DEL PEDAL DE ARRAN.COMPLET KICK AXLE ASSY	1					
2	4S9–E5641–00	ENGRANAJE PEDAL ARRANQUE GEAR, KICK	1					
3	90468–26800	PRESILLA CLIP	1					
4	4S9–E5671–00	RUEDA DE TRINQUETE WHEEL, RATCHET	1					
5	90206–19027	ARANDELA ONDULADA WASHER, WAVE	1					
6	4S9–E5644–00	CUNA SHIM	1					
7	99009–19400	PRESILLA REDONDA CIRCLIP	2					
8	90508–26810	RESORTE DE TORSION SPRING, TORSION	1					
9	4S9–E5664–00	GUIA DE RESORTE GUIDE, SPRING	1					
10	4S9–E5664–10	GUIA DE RESORTE GUIDE, SPRING	1					
11	4S9–E5620–00	PEDAL DE ARRANQUE COMPLETO KICK CRANK ASSY	1					
12	97012–06025	PERNO BOLT	1					
13	93102–15807	SELLO ACEITE OIL SEAL	1					

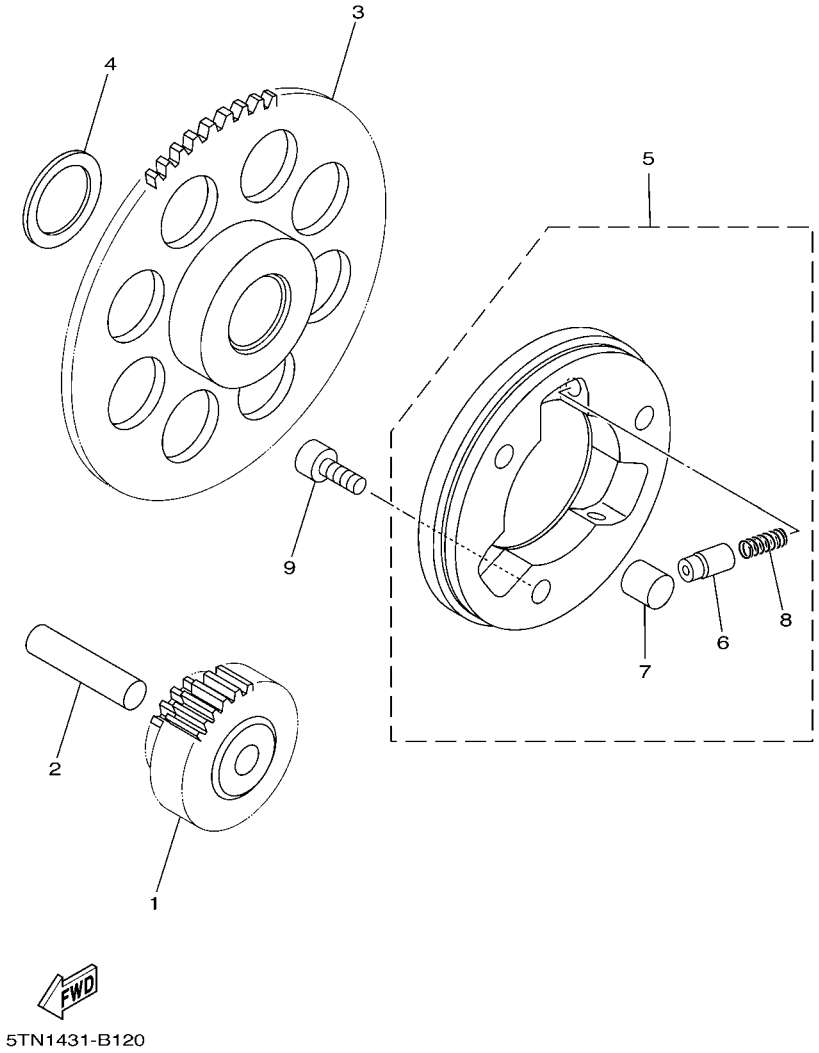

FIG. 12 EMBRAGUE DEL ARRANQUE STARTER CLUTCH

REF. Nº	CODIGO Nº PART NO.	DESCRIPCION DESCRIPTION	40B7					OBSERVACIONES REMARKS
1	4S9–E5512–00	ENGRENAJE NEUTRO GEAR, IDLER 1	1					
2	93608–43800	PASADOR DE CLAVIJA PIN, DOWEL	1					
3	4S9–E5524–00	RUEDA DE ARRANQUE WHEEL, STARTER	1					
4	4S9–E5644–00	CUNA SHIM	1					
5	4S9–E5580–00	ENSAMBLE EXT.EMBRAGUE ARRANQUE STARTER CLUTCH OUTER ASSY	1					
6	4S9–E5583–00	.TAPA RESORTE EMBRAG.ARRANQ. .CAP, STARTER CLUTCH SPRING	3					
7	93610–10174	.PASADOR DE CLAVIJA .PIN, DOWEL	3					
8	90501–02639	.RESORTE DE COMPRESION .SPRING, COMPRESSION	3					
9	91312–06012	TORNILLO BOLT	3					

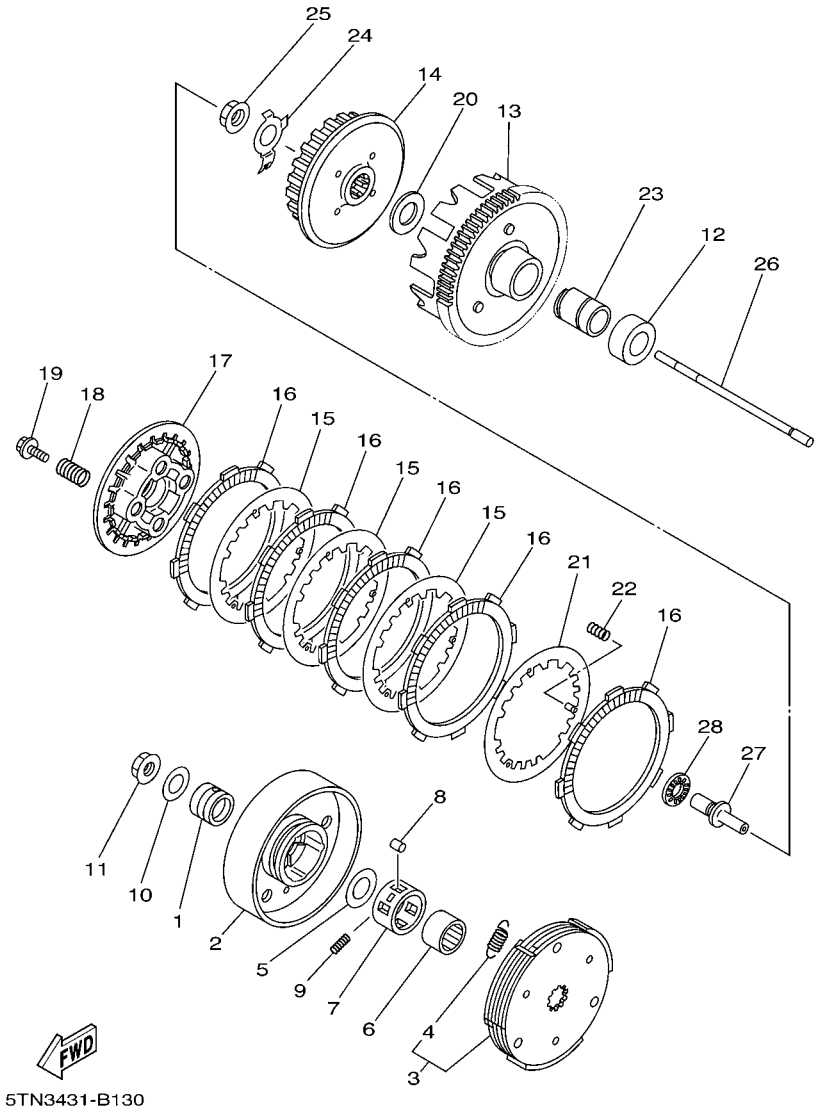

FIG. 13 EMBRAGUE CLUTCH

REF. Nº	CODIGO Nº PART NO.	DESCRIPCION DESCRIPTION	40B7					OBSERVACIONES REMARKS
1	90387–16812	ESPACIADOR COLLAR	1					
2	4S9–E6611–10	CAJA DE EMBRAGUE COMPLETO CLUTCH HOUSING COMP.	1					
3	4S9–E6620–10	PORTADOR DE EMBRAGUE COMPLETO CLUTCH CARRIER ASSY	1					
4	4S9–E6626–10	.RESORTE CONTRAPESO EMBRAGUE 1 .SPRING, CLUTCH WEIGHT 1	3					
5	90201–167P7	ARANDELA PLANA WASHER, PLATE	1					
6	4S9–E6512–00	COPA DE CAJA DE EMBRAGUE BOSS, CLUTCH HOUSING	1					
7	4S9–E6586–00	MEDITOR CAGE	1					
8	93606–10801	PASADOR DE CLAVIJA PIN, DOWEL	3					
9	90501–04802	RESORTE DE COMPRESION SPRING, COMPRESSION	1					
10	90201–12820	ARANDELA PLANA WASHER, PLATE	1					
11	90179–12803	TUERCA NUT	1					
12	90560–17384	SEPARADOR SPACER	1					
13	4S9–E6150–10	CAMPANA DE EMBRAGUE PRIMARY DRIVEN GEAR COMP.	1					
14	4S9–E6371–10	CUBO, DE EMBRAGUE BOSS, CLUTCH	1					
15	4S9–E6324–10	PLACA DE EMBRAGUE PLATE, CLUTCH 1	3					
16	4S9–E6321–10	PLACA DE FRICCION PLATE, FRICTION	5					
17	4S9–E6351–10	PLATO DE PRESION PLATE, PRESSURE 1	1					
18	90501–20804	RESORTE DE COMPRESION SPRING, COMPRESSION	4					
19	90159–05805	TORNILLO CON VALONA SCREW, WITH WASHER	4					
20	4S9–E6154–10	ARANDELA, DE EMPUJE 1 PLATE, THRUST 1	1					
21	4S9–E6350–10	PLACA DE PRESION COMPLETA PRESSURE PLATE ASSY	1					
22	90501–05802	RESORTE DE COMPRESION SPRING, COMPRESSION	3					
23	90387–17805	ESPACIADOR COLLAR	1					
24	4S9–E6135–00	ARANDELA DE CIERRE WASHER, LOCK	1					
25	90179–14803	TUERCA NUT	1					
26	4S9–E6357–00	VARILLA DE EMPUJE 2 ROD, PUSH 2	1					
27	4S9–E6356–00	VARILLA DE EMPUJE 1 ROD, PUSH 1	1					

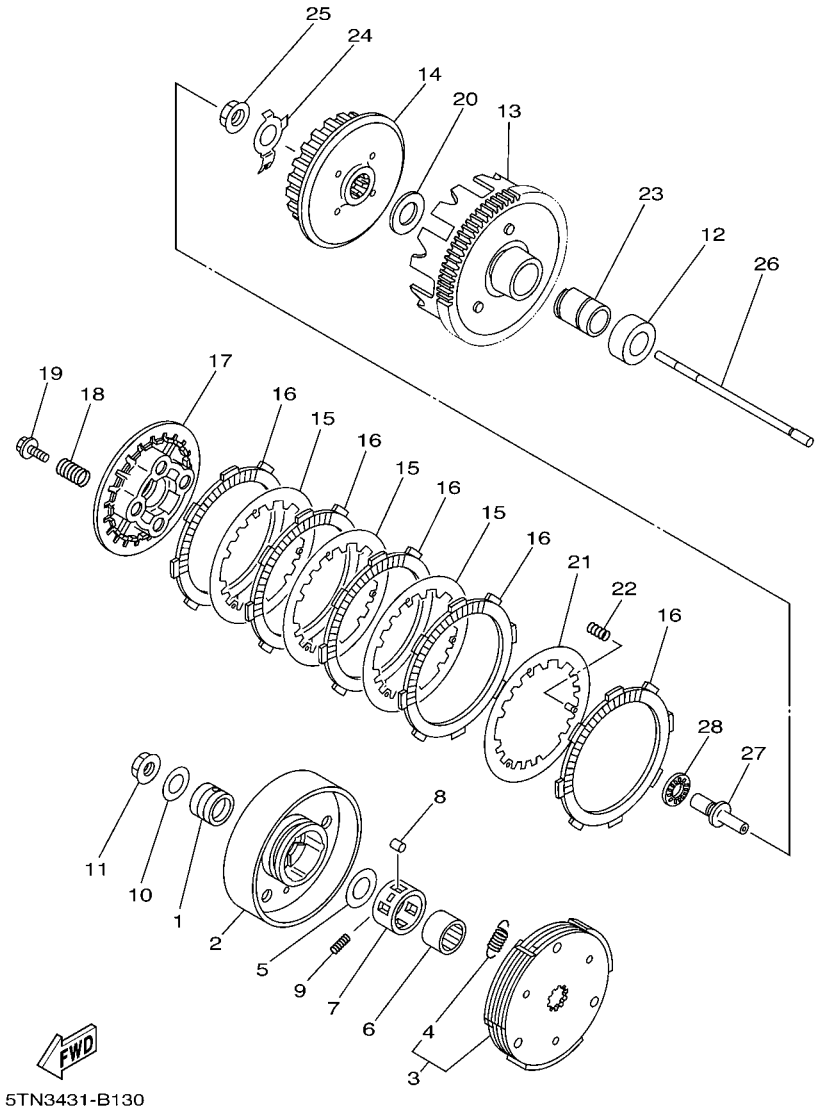

FIG. 13 EMBRAGUE CLUTCH

REF. Nº	CODIGO Nº PART NO.	DESCRIPCION DESCRIPTION	40B7					OBSERVACIONES REMARKS
28	93342–210Y0	COJINETES CON RODAMIENTOS BEARING	1					

FIG. 14 TRANSMISION TRANSMISSION

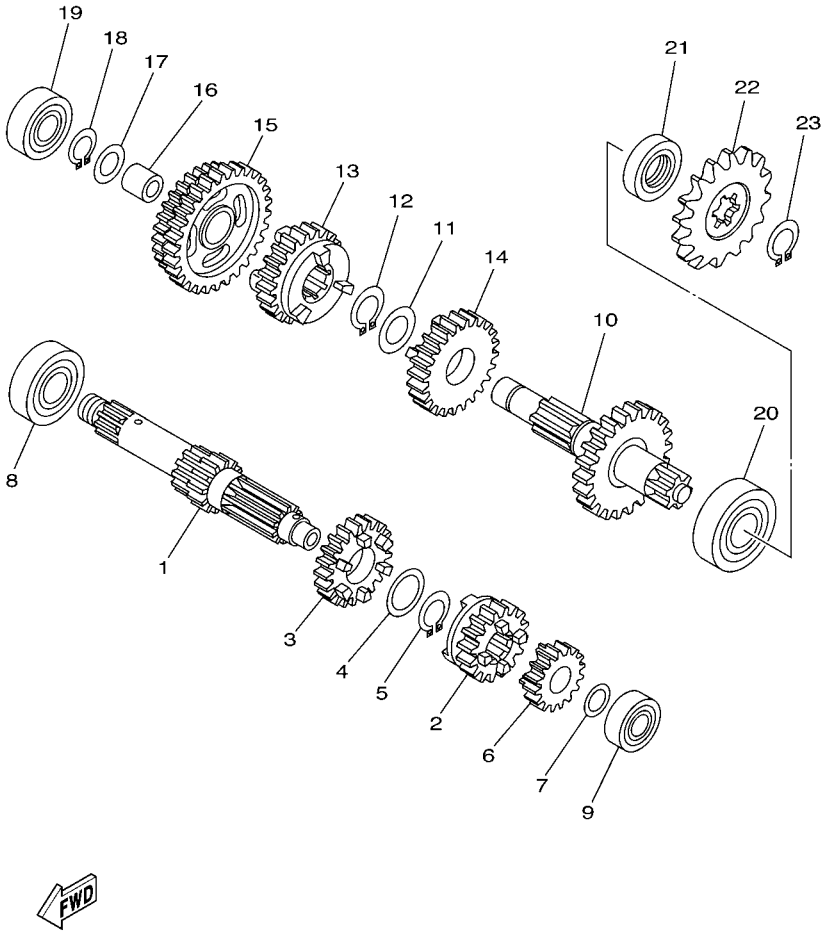

REF. Nº	CODIGO Nº PART NO.	DESCRIPCION DESCRIPTION	40B7					OBSERVACIONES REMARKS
1	4S9–E7411–00	EJE PRIMARIO (12T) AXLE, MAIN (12T)	1					
2	4S9–E7131–00	ENGRANAJE PINON DE 3RA (21T) GEAR, 3RD PINION (21T)	1					
3	4S9–E7141–00	ENGRANAJE PINON DE 4TA (21T) GEAR, 4TH PINION (21T)	1					
4	90201–20266	ARANDELA, PLACA (T=1.0) WASHER, PLATE (T=1.0)	1					
5	93410–20809	SEGURO CIRCLIP	1					
6	4S9–E7121–00	ENGRANAJE DE PINON DE 2DA(17T GEAR, 2ND PINION (17T)	1					
7	90201–128C9	ARANDELA PLANA WASHER, PLATE	1					
8	93306–203XE	COJINETE BEARING	1					
9	93306–001X8	COJINETE BEARING	1					
10	4S9–E7402–00	EJE DE TRACCION COMPLETO (33T) DRIVE AXLE ASSY (33T)	1					
11	90201–20266	ARANDELA, PLACA (T=1.0) WASHER, PLATE (T=1.0)	1					
12	93410–20809	SEGURO CIRCLIP	1					
13	4S9–E7241–00	ENGRANAJE DE RUEDA 4TA (23T) GEAR, 4TH WHEEL (23T)	1					
14	4S9–E7231–00	ENGRANAJE RUEDA DE 3RA (29T) GEAR, 3RD WHEEL (29T)	1					
15	4S9–E7211–00	ENGRANAJE RUEDA DE 1 RA 30/38T GEAR, 1ST WHEEL (30T/38T)	1					
16	90387–15812	ESPACIADOR COLLAR	1					
17	90201–15700	ARANDELA PLANA WASHER, PLATE	1					
18	99009–15400	PRESILLA REDONDA CIRCLIP	1					
19	93306–252XJ	COJINETE BEARING	1					
20	93306–204XF	COJINETE BEARING	1					
21	93102–20802	SELLO ACEITE OIL SEAL	1					
22	93822–15817	CORONA (15T) SPROCKET, DRIVE (15T)	1					
23	93410–20809	SEGURO CIRCLIP	1					

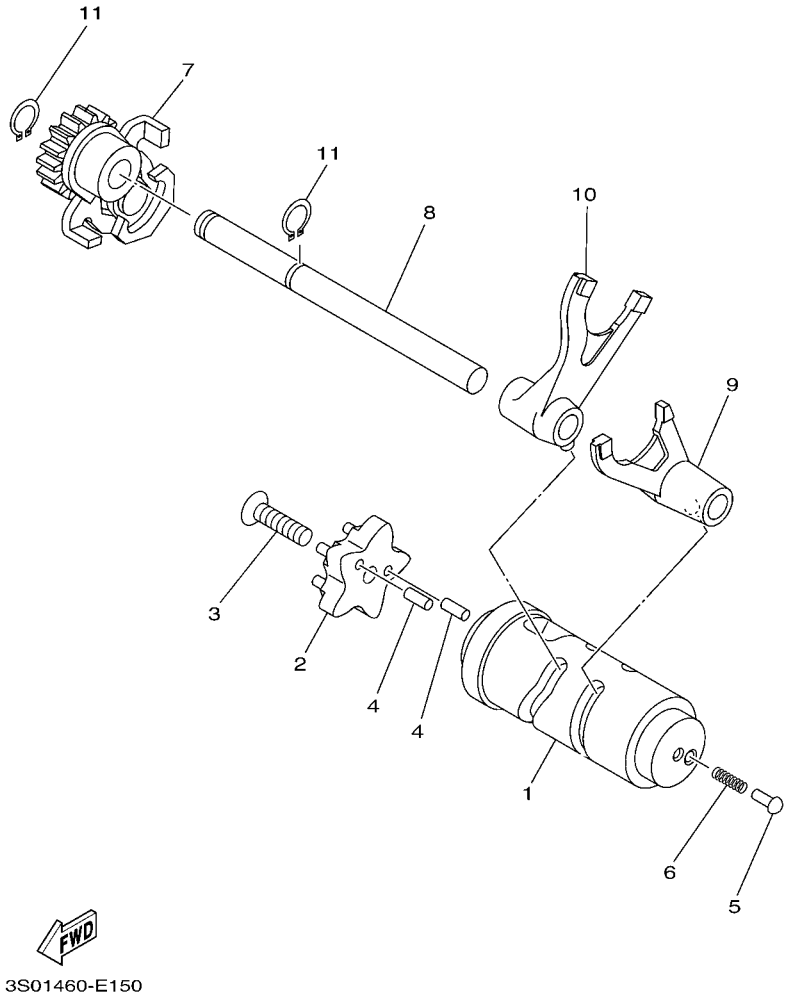

FIG. 15 LEVA DE CAMBIO & HORQUILLA SHIFT CAM & FORK

REF. Nº	CODIGO Nº PART NO.	DESCRIPCION DESCRIPTION	40B7					OBSERVACIONES REMARKS
1	4S9–E8540–00	LEVA DEL CAMBIO COMPLETA SHIFT CAM ASSY	1					
2	4S9–E8185–00	SEGMENTO DE RETENCION SEGMENT	1					
3	92B12–06025	PERNO BOLT	1					
4	93604–12831	PASADOR DE CLAVIJA PIN, DOWEL	2					
5	4S9–E8542–00	PUNTO MUERTO POINT, NEUTRAL	1					
6	90501–06805	RESORTE DE COMPRESION SPRING, COMPRESSION	1					
7	4S9–E8120–00	PALANCA DE SELECTOR COMPLETO SHIFT LEVER ASSY	1					
8	4S9–E8531–00	BARRA GUIA HORQ. CAMBIO 1 BAR, SHIFT FORK GUIDE 1	1					
9	4S9–E8511–00	HORQUILLA DEL CAMBIO 1 FORK, SHIFT 1	1					
10	4S9–E8512–00	HORQUILLA DEL CAMBIO 2 FORK, SHIFT 2	1					
11	99009–10400	PRESILLA REDONDA CIRCLIP	2					

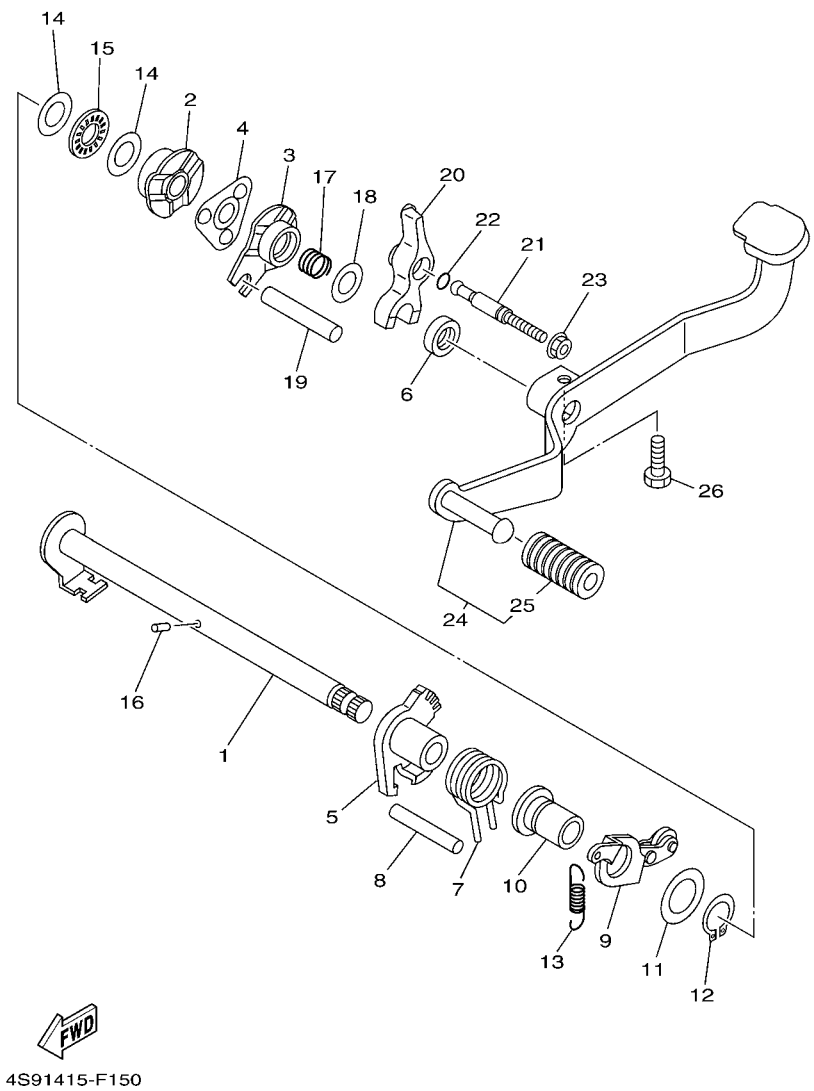

FIG. 16 EJE DE CAMBIO & PEDAL SHIFT SHAFT

REF. Nº	CODIGO Nº PART NO.	DESCRIPCION DESCRIPTION	40B7					OBSERVACIONES REMARKS
1	4S9–E8101–00	EJE SELECTOR COMPLETO SHIFT SHAFT ASSY	1					
2	4S9–E8179–00	GUIA GUIDE	1					
3	4S9–E8172–00	GUIA DE CAMBIO GUIDE, SHIFT	1					
4	4S9–E8181–00	SOSTEN DE SUJETADOR HOLDER, PAWL	1					
5	4S9–E8152–00	PALANCA DE CAMBIO 4 LEVER, SHIFT 4	1					
6	93102–12806	SELLO ACEITE OIL SEAL	1					
7	90508–29007	RESORTE DE TORSION SPRING, TORSION	1					
8	93608–50149	PASADOR DE CLAVIJA PIN, DOWEL	1					
9	4S9–E8140–00	PALANCA DE TOPE COMPLETA STOPPER LEVER ASSY	1					
10	4S9–E8699–00	COPA 1 BOSS 1	1					
11	90201–178D3	ARANDELA PLANA WASHER, PLATE	1					
12	99009–17400	PRESILLA REDONDA CIRCLIP	1					
13	4S9–E8337–00	RESORTE SPRING	1					
14	90201–127F4	ARANDELA PLANA WASHER, PLATE	2					
15	93340–212Y6	COJINETES CON RODAMIENTOS BEARING	1					
16	93604–10837	PASADOR DE CLAVIJA PIN, DOWEL	1					
17	90501–12805	RESORTE DE COMPRESION SPRING, COMPRESSION	1					
18	90201–12045	ARANDELA PLANA WASHER, PLATE	1					
19	4S9–E8173–00	PASADOR CAMBIO PIN, SHIFT	1					
20	4S9–E817A–00	BRAZO, DE CAMBIO 3 ARM, SHIFT 3	1					
21	4S9–E8186–00	TORNILLO DE AJUSTE SCREW, ADJUSTING	1					
22	93210–06806	ANILLO O O-RING	1					
23	95702–06500	TUERCA DE BRIDA NUT, FLANGE	1					
24	4S9–E8110–00	PEDAL DE CAMBIO COMPLETO SHIFT PEDAL ASSY	1					
25	4S9–E8113–00	.FUNDA DEL PEDAL DEL CAMBIO .COVER, SHIFT PEDAL	1					
26	97022–08020	PERNO BOLT	1					

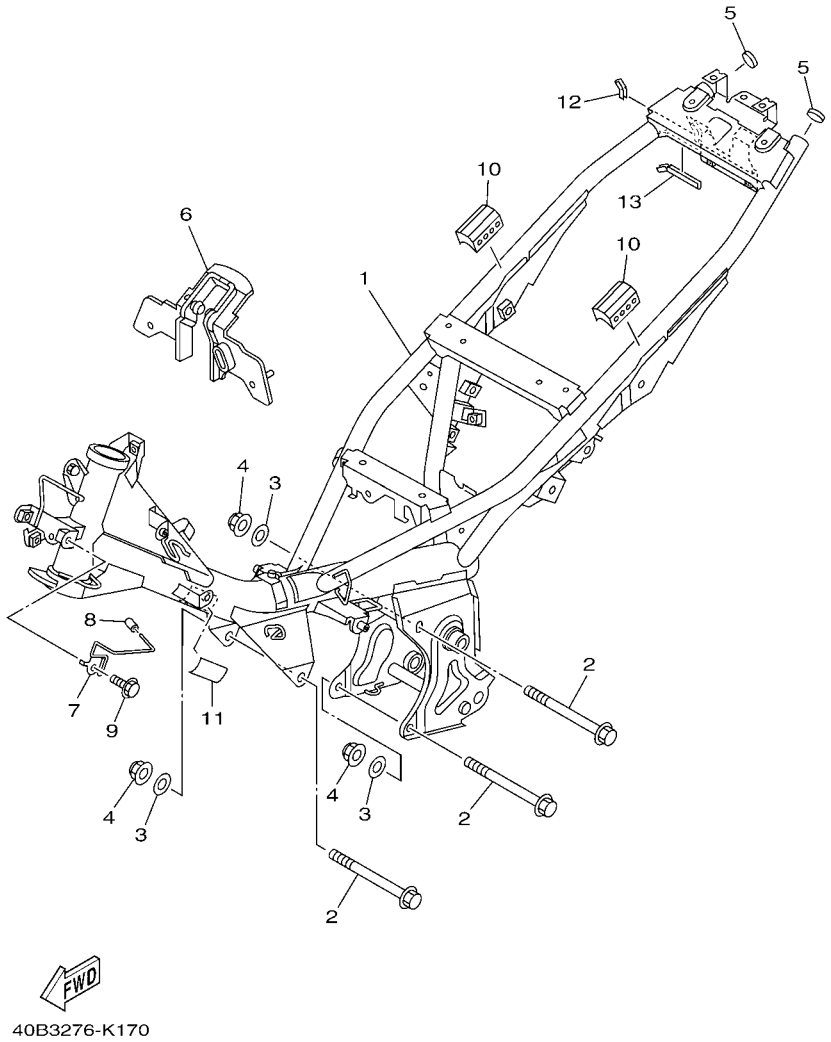

FIG. 17 CUADRO FRAME

REF. Nº	CODIGO Nº PART NO.	DESCRIPCION DESCRIPTION	40B7					OBSERVACIONES REMARKS
1	40B–F1110–02	ARMAZON COMPLETO FRAME COMP.	1					
2	95812–08120	TORNILLO DE REBORDE BOLT, FLANGE	3					
3	90201–08043	ARANDELA PLANA WASHER, PLATE	3					
4	95602–08200	TUERCA DE AUTO-CIERRE NUT, SELF-LOCKING	3					
5	4S9–F139R–00	CUBIERTA 2 COVER 2	2					
6	4S9–F117R–00	CUBIERTA 4 COVER 4	1					
7	4S9–F1679–20	SOPORTE DE CONJUNT HOLDER, HARNESS	1					
8	4S9–F113B–00	AMORTIGUADOR DAMPER	1					
9	95802–06010	TORNILLO DE REBORDE BOLT, FLANGE	1					
10	4S9–F139U–00	AMORTIGUADOR 2 DAMPER 2	2					
11	4S9–F111D–01	SELLO 1 SEAL 1	1					
12	90520–02801	EQUILIBRIO, CUBIERTA DAMPER, PLATE	1					
13	90520–02802	EQUILIBRIO, CUBIERTA DAMPER, PLATE	1					

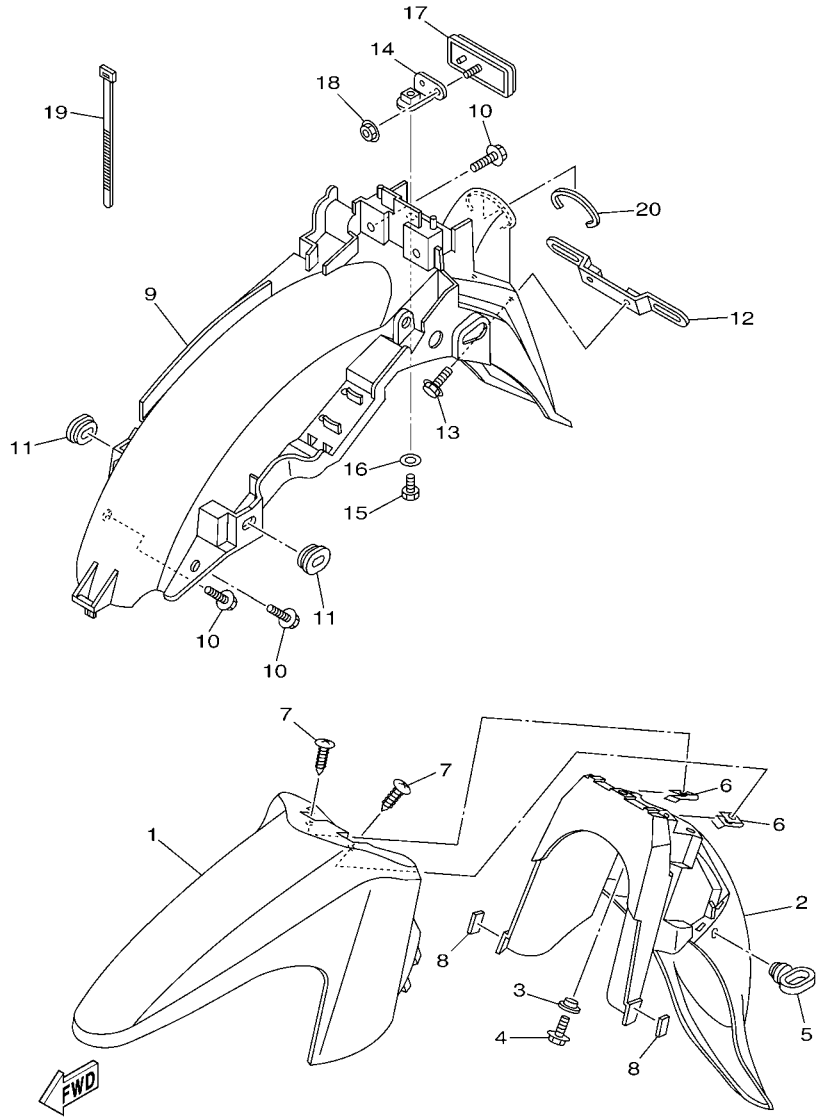

FIG. 18 GUARDABARRO FENDER

REF. Nº	CODIGO Nº PART NO.	DESCRIPCION DESCRIPTION	40B7					OBSERVACIONES REMARKS
1	40B–F1511–00–P0	GUARDABARRO DELANTERO FENDER, FRONT	1					UR PARA DRMK UR FOR DRMK
	40B–F1511–00–P1	GUARDABARRO DELANTERO FENDER, FRONT	1					UR PARA SMX UR FOR SMX
	40B–F1511–00–P3	GUARDABARRO DELANTERO FENDER, FRONT	1					UR PARA DPBMC UR FOR DPBMC
2	4S9–F1556–01	GUARDABARRO, DELANTERO 2 FENDER, FRONT 2	1					
3	90387–06857	ESPACIADOR COLLAR	3					
4	97522–06520	TORNILLO HEXAGONAL CON RONDONA BOLT, WITH WASHER	3					
5	4S9–F1518–01	SOPORTE DE CABLE HOLDER, CABLE	1					
6	90183–05807	TUERCA DE RESORTE NUT, SPRING	2					
7	97702–50014	TORNILLO ROSCA HEMBRA SCREW, TAPPING	2					
8	4S9–F8371–00	AMORTIGUADOR DAMPER	2					
9	40B–F1611–01	GUARDABARRO TRASERO FENDER, REAR	1					
10	90119–06869	TORNILLO CON ARANDELA BOLT, WITH WASHER	4					
11	90480–01559	TAPON GROMMET	2					
12	40B–F1685–00	SOPORTE DE LICENCIA BRACKET, LICENSE	1					
13	90119–068A7	TORNILLO CON ARANDELA BOLT, WITH WASHER	2					
14	40B–F113J–00	SOPORTE, REFLECTOR 1 BRACKET, REFLECTOR 1	1					
15	97002–05012	PERNO BOLT	1					
16	92902–05200	ARANDELA WASHER	1					
17	4P7–H5130–01	REFLECTOR TRASERO COMPLETO REAR REFLECTOR ASSY	1					
18	95702–05500	TUERCA DE BRIDA NUT, FLANGE	1					
19	4S9–H3936–00	BANDA DE CABLE DE INTERRUPTOR BAND, SWITCH CORD	1					
20	90520–05804	EQUILIBRIO, CUBIERTA DAMPER, PLATE	1					

FIG. 19 CUBIERTA LATERAL SIDE COVER

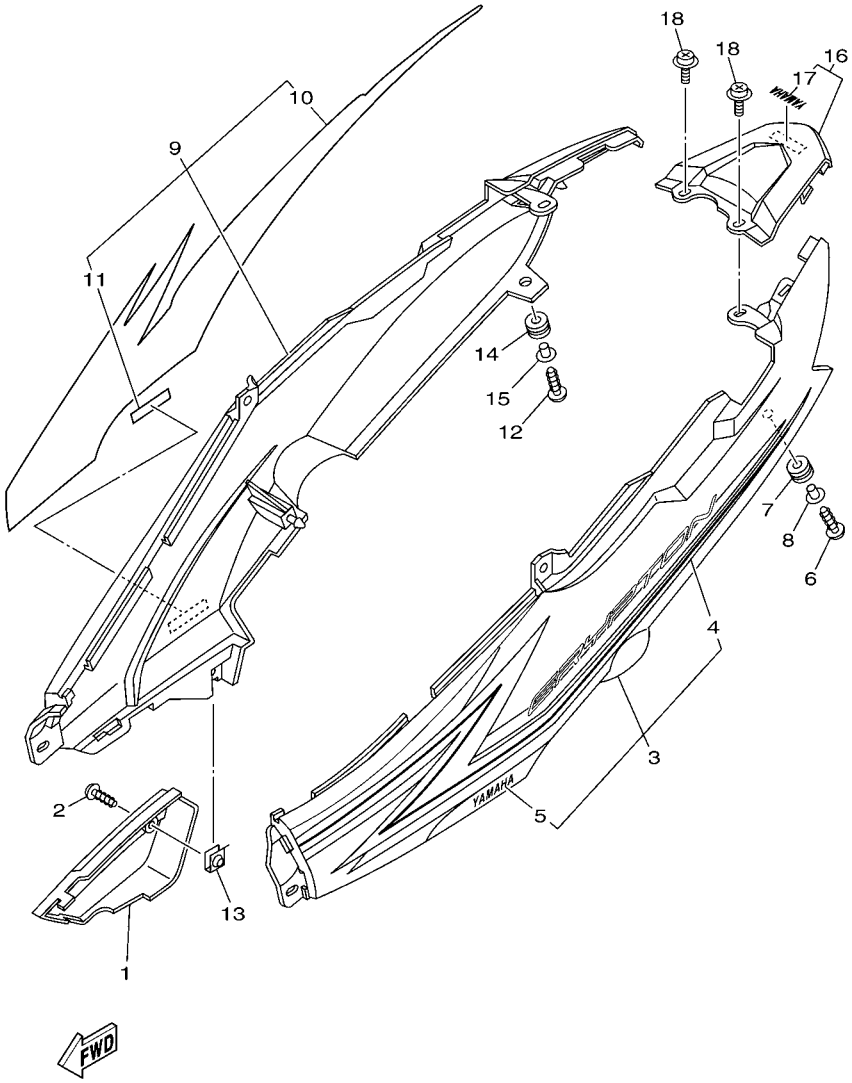

REF. Nº	CODIGO Nº PART NO.	DESCRIPCION DESCRIPTION	40B7					OBSERVACIONES REMARKS
1	4S9–F1721–00	CUBIERTA LATERAL 2 COVER, SIDE 2	1					
2	97702–50014	TORNILLO ROSCA HEMBRA SCREW, TAPPING	1					
3	4S9–XF173–10–P0	TAPA LATERAL 3 COVER, SIDE 3	1					UR PARA DRMK UR FOR DRMK
	4S9–XF173–10–P1	TAPA LATERAL 3 COVER, SIDE 3	1					UR PARA SMX UR FOR SMX
	4S9–XF173–10–P3	TAPA LATERAL 3 COVER, SIDE 3	1					UR SMX PARA DPBMC UR SMX FOR DPBMC
4	4S9–F173E–30	.GRAFICO, 1 .GRAPHIC 1	1					UR PARA DRMK UR FOR DRMK
	4S9–F173E–40	.GRAFICO, 1 .GRAPHIC 1	1					UR PARA SMX UR FOR SMX
	4S9–F173E–50	.GRAFICO, 1 .GRAPHIC 1	1					UR PARA DPBMC UR FOR DPBMC
5	99246–00100	.EMBLEMA, YAMAHA .EMBLEM, YAMAHA	1					
6	97702–50025	TORNILLO ROSCA HEMBRA SCREW, TAPPING	1					
7	90480–12808	TAPON GROMMET	1					
8	90387–06855	ESPACIADOR COLLAR	1					
9	4S9–XF174–10–P0	CUBIERTA LATERAL 4 COVER, SIDE 4	1					UR PARA DRMK UR FOR DRMK
	4S9–XF174–10–P1	CUBIERTA LATERAL 4 COVER, SIDE 4	1					UR PARA SMX UR FOR SMX
	4S9–XF174–10–P3	CUBIERTA LATERAL 4 COVER, SIDE 4	1					UR SMX PARA DPBMC UR SMX FOR DPBMC
10	4S9–F173F–30	.GRAFICO 2 .GRAPHIC 2	1					UR PARA DRMK UR FOR DRMK
	4S9–F173F–40	.GRAFICO 2 .GRAPHIC 2	1					UR PARA SMX UR FOR SMX
	4S9–F173F–50	.GRAFICO 2 .GRAPHIC 2	1					UR PARA DPBMC UR FOR DPBMC
11	99246–00100	.EMBLEMA, YAMAHA .EMBLEM, YAMAHA	1					
12	97702–50025	TORNILLO ROSCA HEMBRA SCREW, TAPPING	1					
13	90183–05807	TUERCA DE RESORTE NUT, SPRING	1					
14	90480–12808	TAPON GROMMET	1					
15	90387–06855	ESPACIADOR COLLAR	1					
16	4S9–XF171–10–P0	CUBIERTA LATERAL 5 COVER, SIDE 5	1					DRMK(DRMK) DRMK(DRMK)
	4S9–XF171–00–P0	CUBIERTA LATERAL 5 COVER, SIDE 5	1					SMX(SMX,DPBMC) SMX(SMX,DPBMC)
17	4S9–F153E–00	.EMBLEMA, YAMAHA .EMBLEM, YAMAHA	1					
18	90159–06842	TORNILLO CON VALONA SCREW, WITH WASHER	2					

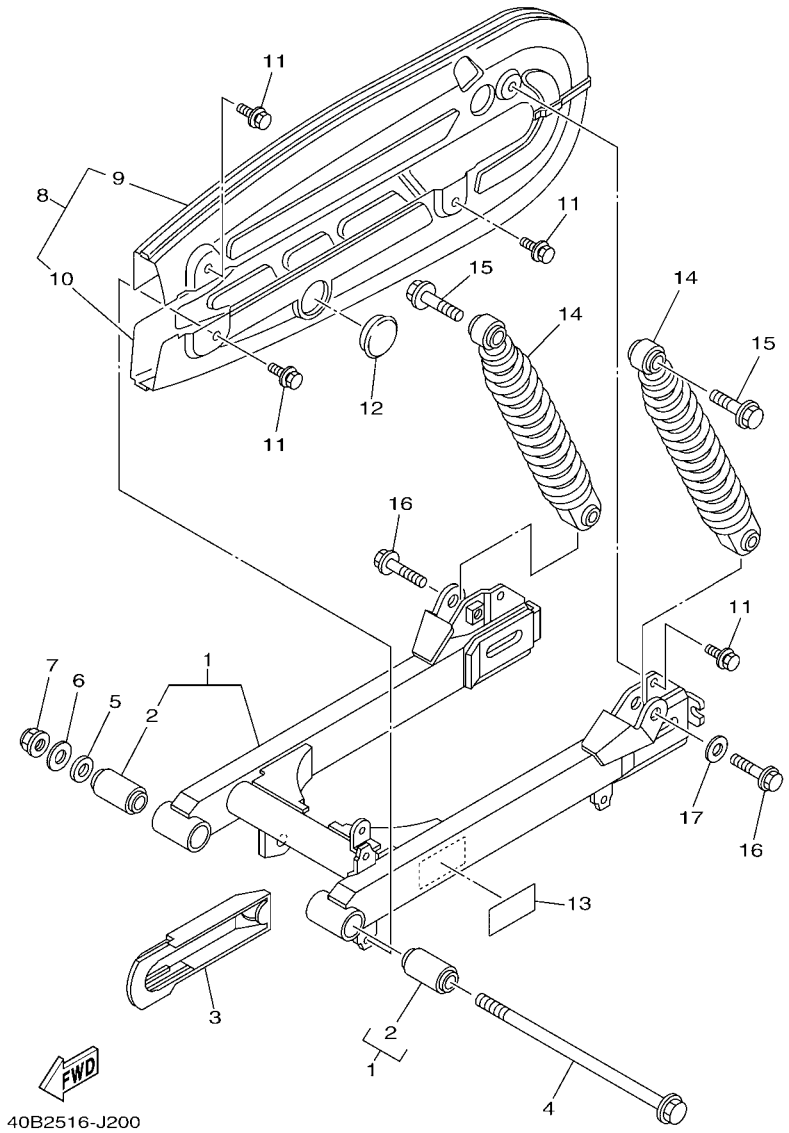

FIG. 20 BRAZO TRASERO & SUSPENSION REAR ARM & SUSPENSION

REF. Nº	CODIGO Nº PART NO.	DESCRIPCION DESCRIPTION	40B7					OBSERVACIONES REMARKS
1	4S9–F2100–01–WN	BRAZO TRASERO COMPLETO REAR ARM ASSY	1					CIS CIS
2	4S9–F2123–00	.BUJE 1 .BUSH 1	2					
3	4S9–F2151–01	SELLO DE GUARDA SEAL, GUARD	1					
4	4S9–F2141–00	EJE DEL BARCULANTE SHAFT, PIVOT	1					
5	90201–128D0	ARANDELA PLANA WASHER, PLATE	1					
6	90201–128F3	ARANDELA PLANA WASHER, PLATE	1					
7	95602–12200	TUERCA DE AUTO-CIERRE NUT, SELF-LOCKING	1					
8	4S9–F2310–00	CAJA DE CADENA COMPLETA CHAIN CASE ASSY	1					
9	4S9–F2311–00	.CABRECADENA .CASE, CHAIN	1					
10	4S9–F2312–00	.CAJA DE CADENA 2 .CASE, CHAIN 2	1					
11	97502–06510	PERNO CON ARANDELA BOLT, WITH WASHER	4					
12	4S9–F2315–00	TAPA CAP	1					
13	40B–F1668–20	ETIQUETA DE FRANJA LABEL, TIRE	1					
14	4S9–F2210–11	AMORTIGUADOR TRASERO COMPLETO SHOCK ABSORBER ASSY, REAR	2					
15	90105–12802	TORNILLO BOLT, FLANGE	2					
16	90105–10867	TORNILLO BOLT, FLANGE	2					
17	90201–10831	ARANDELA PLANA WASHER, PLATE	1					

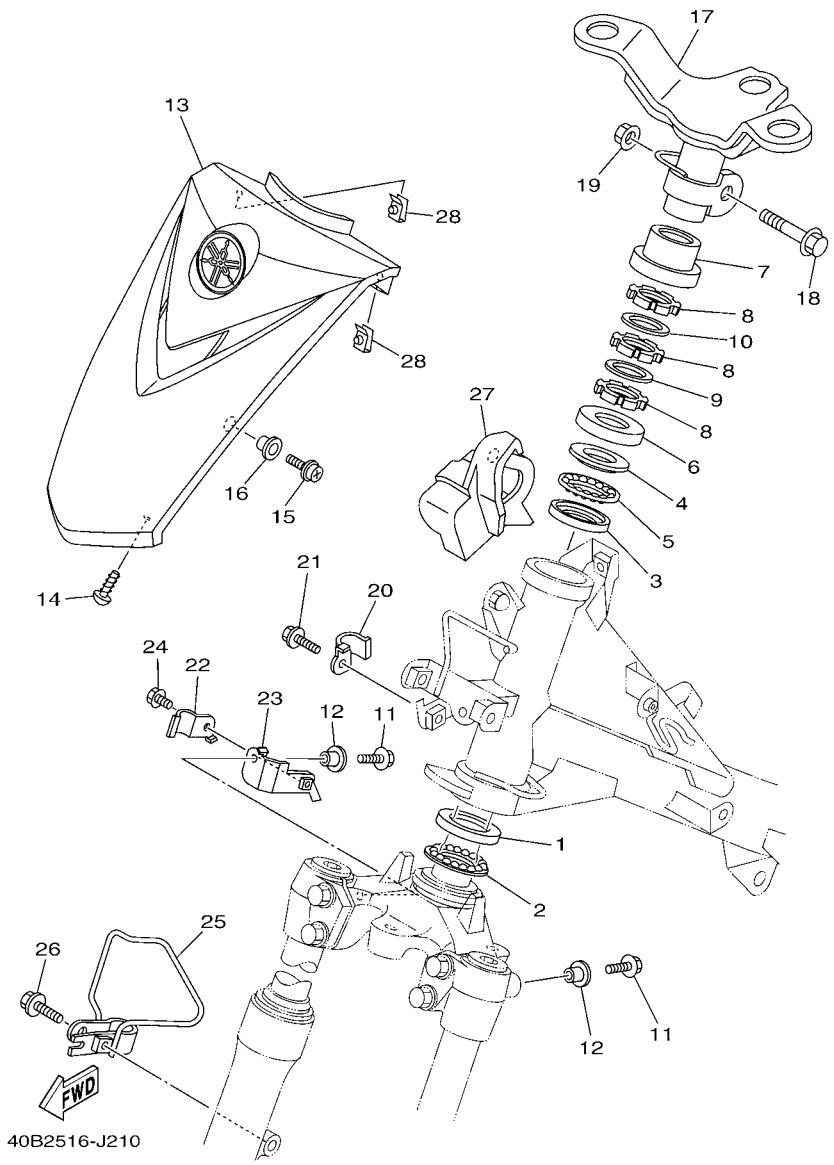

FIG. 21 DIRECCION STEERING

REF. Nº	CODIGO Nº PART NO.	DESCRIPCION DESCRIPTION	40B7					OBSERVACIONES REMARKS
1	4KL–F3412–00	PISTA DE BOLAS 2 RACE, BALL 2	1					
2	5WG–F341E–00	RETEN DE COJINETE RETAINER, BALL BEARING	1					
3	5WB–F3412–00	PISTA DE BOLAS 2 RACE, BALL 2	1					
4	5WB–F3411–00	PISTA DE BOLAS 1 RACE, BALL 1	1					
5	5WG–F341E–10	RETEN DE COJINETE RETAINER, BALL BEARING	1					
6	4S9–F3416–01	CUBIERTA DE BASE DE BOLA 2 COVER, BALL RACE 2	1					
7	4S9–F3415–00	CUBIERTA DE PISTA DE BOLAS 1 COVER, BALL RACE 1	1					
8	90179–25809	TUERCA NUT	3					
9	90202–26803	ARANDELA DE PLANA WASHER, PLATE	1					
10	4S9–F3418–01	ARANDELA ESPECIAL WASHER, SPECIAL	1					
11	95022–06016	PERNO, DE BRIDA BOLT, FLANGE	2					
12	90387–06857	ESPACIADOR COLLAR	2					
13	40B–XF339–40–P0	PANEL DELANTERO PANEL, FRONT	1					SMX(DRMK,DPBMC) SMX(DRMK,DPBMC)
	40B–XF339–50–P1	PANEL DELANTERO PANEL, FRONT	1					BS4(SMX) BS4(SMX)
14	97702–50012	TORNILLO ROSCA HEMBRA SCREW, TAPPING	2					
15	90159–06842	TORNILLO CON VALONA SCREW, WITH WASHER	2					
16	90387–062M9	ESPACIADOR COLLAR	2					
17	4S9–F3461–00	SOPORTE DE MANUBRIO BRACKET, HANDLE	1					
18	90105–10036	TORNILLO BOLT, FLANGE	1					
19	95602–10200	TUERCA DE AUTO-CIERRE NUT, U FLANGE	1					
20	4S9–F5887–01	SOPORTE DE MANGUERA FRENO HOLDER, BRAKE HOSE	1					
21	95022–06010	PERNO, DE BRIDA BOLT, FLANGE	1					
22	4S9–F5886–01	SOPORTE DE MANGUERA FRENO HOLDER, BRAKE HOSE	1					
23	4S9–F5875–01	SOPORTE DE MANGUERA FRENO 1 HOLDER, BRAKE HOSE 1	1					
24	95022–06010	PERNO, DE BRIDA BOLT, FLANGE	1					
25	4S9–F331E–01	GUIA DE CABLE GUIDE, CABLE	1					
26	95022–06025	PERNO, DE BRIDA BOLT, FLANGE	1					

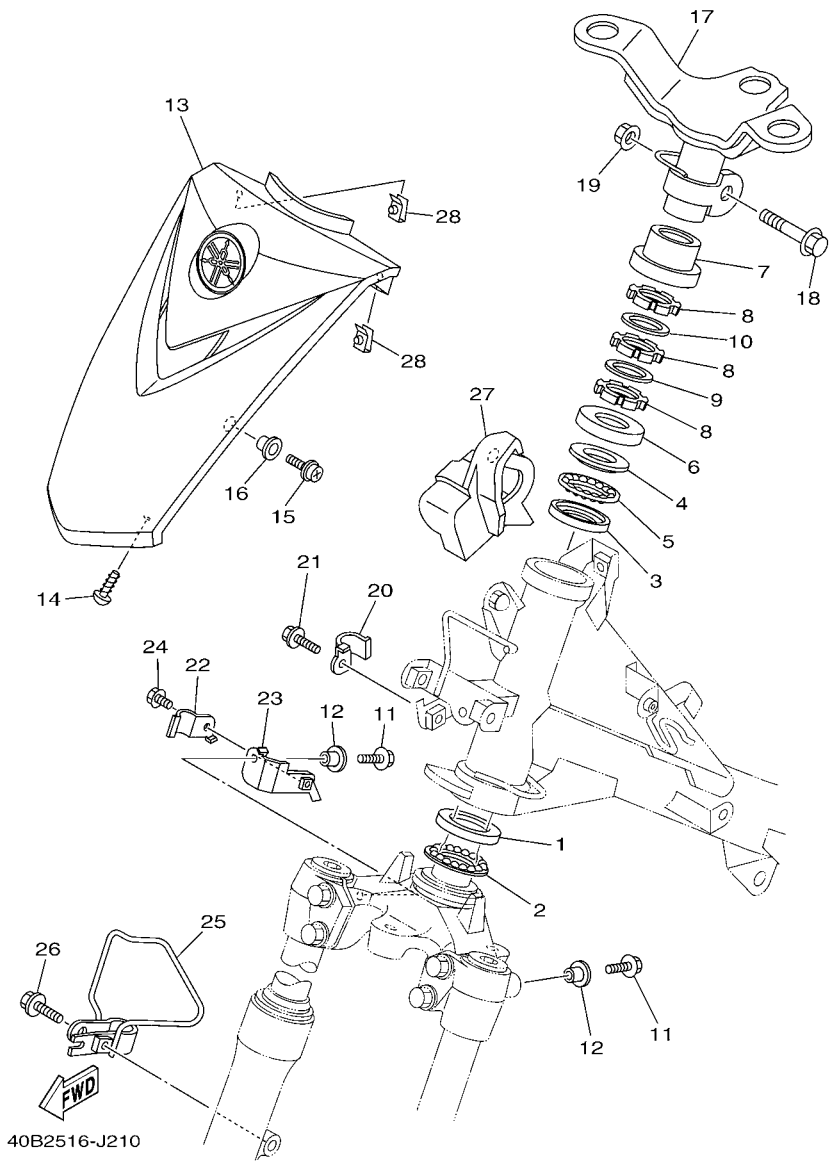

FIG. 21 DIRECCION STEERING

REF. Nº	CODIGO Nº PART NO.	DESCRIPCION DESCRIPTION	40B7					OBSERVACIONES REMARKS
27	4S9–F3472–00	PROTECTOR PROTECTOR	1					
28	90183–05807	TUERCA DE RESORTE NUT, SPRING	2					

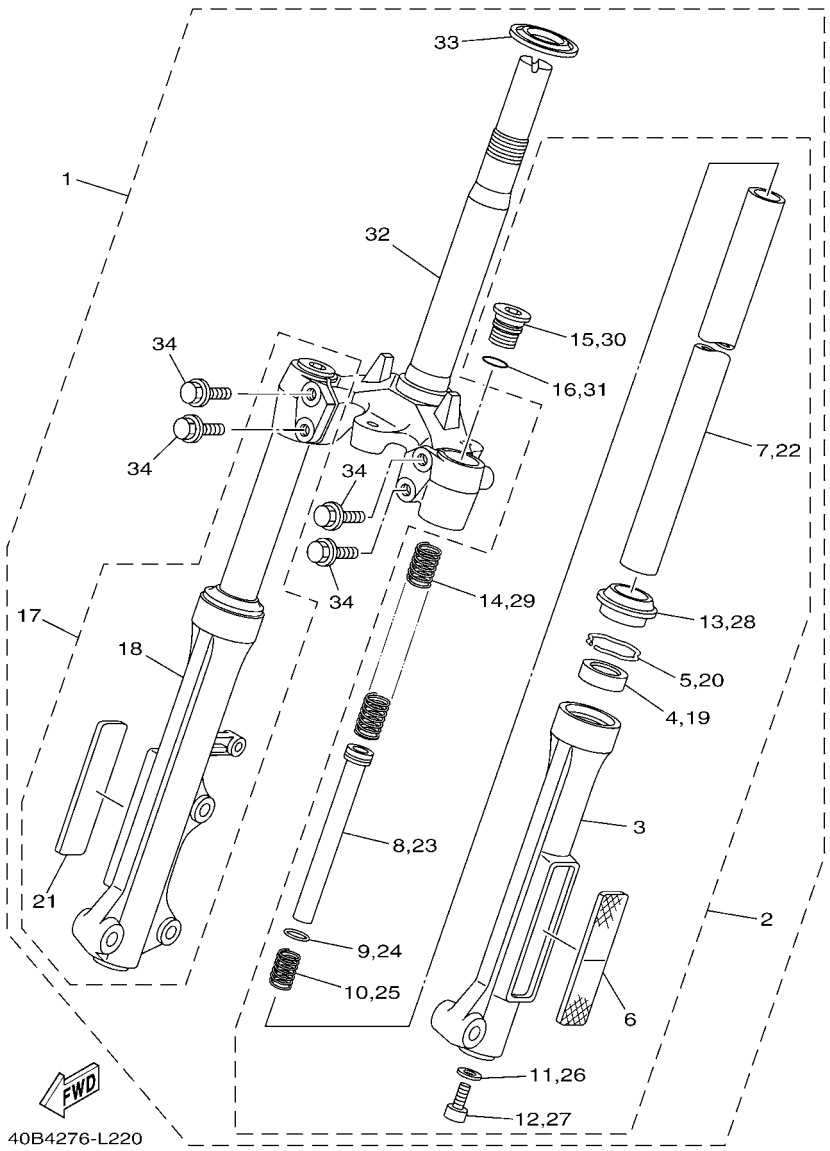

FIG. 22 HORQUILLA DELANTERA FRONT FORK

REF. Nº	CODIGO Nº PART NO.	DESCRIPCION DESCRIPTION	40B7					OBSERVACIONES REMARKS
1	4S9–F3100–22	HORQUILLA DELANTERA COMPLETA FRONT FORK ASSY	1					
2	4S9–F3102–20	.HORQUILLA DELANTERA COMPL.(MI) .FRONT FORK ASSY (L.H)	1					
3	4S9–F3126–10	..TUBO EXTERIOR (IZQUIERDO) ..TUBE, OUTER (LEFT)	1					
4	5WB–F3145–00	..RETEN DE ACEITE ..OIL SEAL	1					
5	5WB–F3156–00	..ANILLO DE ENGANCHE ..RING, SNAP	1					
6	4S9–H5110–10	..REFLECTOR COMPLETO ..REFLECTOR ASSY	1					
7	4S9–F3110–10	..TUBO INTERIOR COMPLETO 1 ..INNER TUBE COMP.1	1					
8	4S9–F3170–10	..CILINDRO COMPL DE HORQ DELANT ..CYLINDER COMP., FRONT FORK	1					
9	4S9–F3157–10	..ANILLO DEL PISTON ..RING, PISTON	1					
10	5WB–F3152–00	..RESORTE DE SUBENSAMBLE ..SPRING, SUB	1					
11	5WB–F3158–00	..EMPAQUE ..GASKET	1					
12	5WB–F3181–00	..TORNILLO CABEZAHEXAGONAL ..BOLT, HEXAGON SOCKET HEAD	1					
13	4RT–F3144–20	..GUARDAPOLVO ..SEAL, DUST	1					
14	4S9–F3141–10	..RESORTE HORQUILLA DELANT. ..SPRING, FRONT FORK	1					
15	4S9–F3111–10	..PERNO DE TAPA ..BOLT, CAP	1					
16	5WB–F3147–00	..ARO ..O-RING	1					
17	4S9–F3103–20	.HORQUILLA DELANTERA COMPL.(MD) .FRONT FORK ASSY (R.H)	1					
18	4S9–F3136–10	..TUBO EXTERIOR (DERECHO) ..TUBE, OUTER (RIGHT)	1					
19	5WB–F3145–00	..RETEN DE ACEITE ..OIL SEAL	1					
20	5WB–F3156–00	..ANILLO DE ENGANCHE ..RING, SNAP	1					
21	4S9–H5110–10	..REFLECTOR COMPLETO ..REFLECTOR ASSY	1					
22	4S9–F3110–10	..TUBO INTERIOR COMPLETO 1 ..INNER TUBE COMP.1	1					
23	4S9–F3170–10	..CILINDRO COMPL DE HORQ DELANT ..CYLINDER COMP., FRONT FORK	1					
24	4S9–F3157–10	..ANILLO DEL PISTON ..RING, PISTON	1					
25	5WB–F3152–00	..RESORTE DE SUBENSAMBLE ..SPRING, SUB	1					
26	5WB–F3158–00	..EMPAQUE ..GASKET	1					
27	5WB–F3181–00	..TORNILLO CABEZAHEXAGONAL ..BOLT, HEXAGON SOCKET HEAD	1					

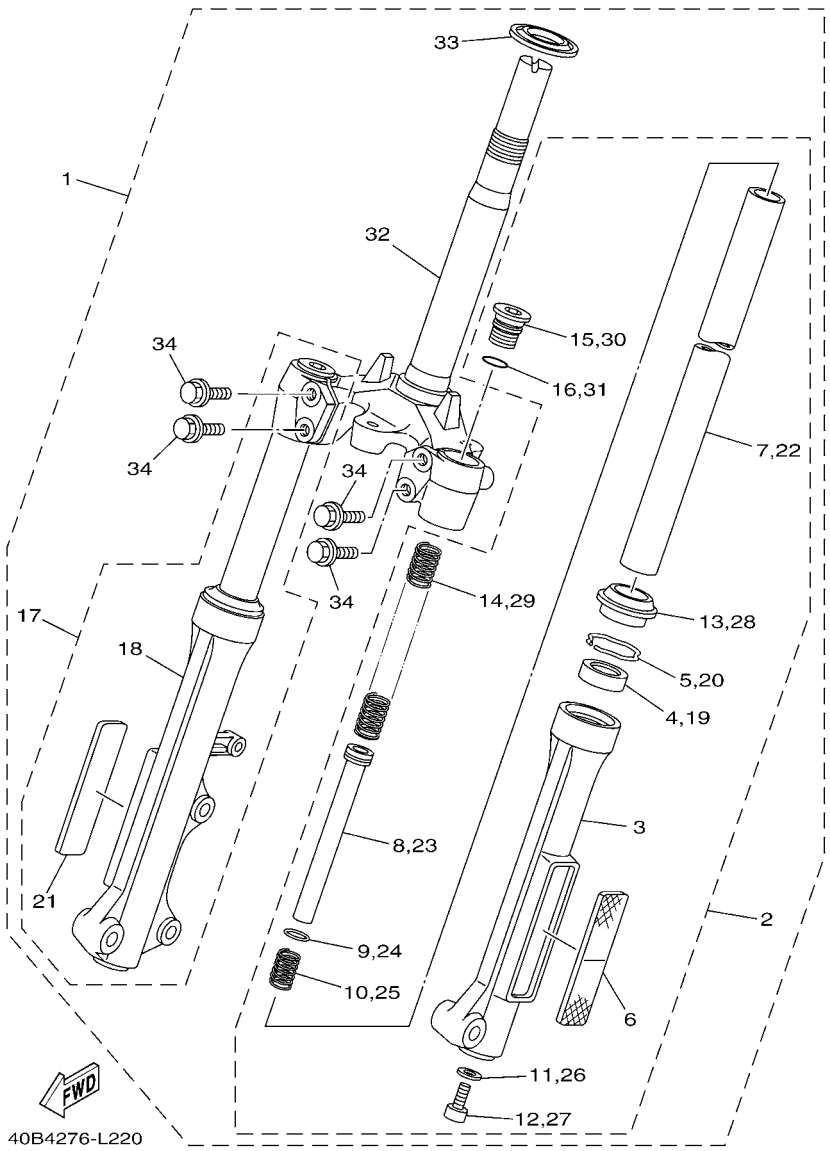

FIG. 22 HORQUILLA DELANTERA FRONT FORK

REF. Nº	CODIGO Nº PART NO.	DESCRIPCION DESCRIPTION	40B7					OBSERVACIONES REMARKS
28	4RT–F3144–20	..GUARDAPOLVO ..SEAL, DUST	1					
29	4S9–F3141–10	..RESORTE HORQUILLA DELANT. ..SPRING, FRONT FORK	1					
30	4S9–F3111–10	..PERNO DE TAPA ..BOLT, CAP	1					
31	5WB–F3147–00	..ARO ..O-RING	1					
32	4S9–F3340–10	.PLATINA INFERIOR COMPLETA .UNDER BRACKET COMP.	1					
33	4TU–F3411–00	.PISTA DE BOLAS 1 .RACE, BALL 1	1					
34	4S9–F3346–10	.PERNO 1 .BOLT 1	4					

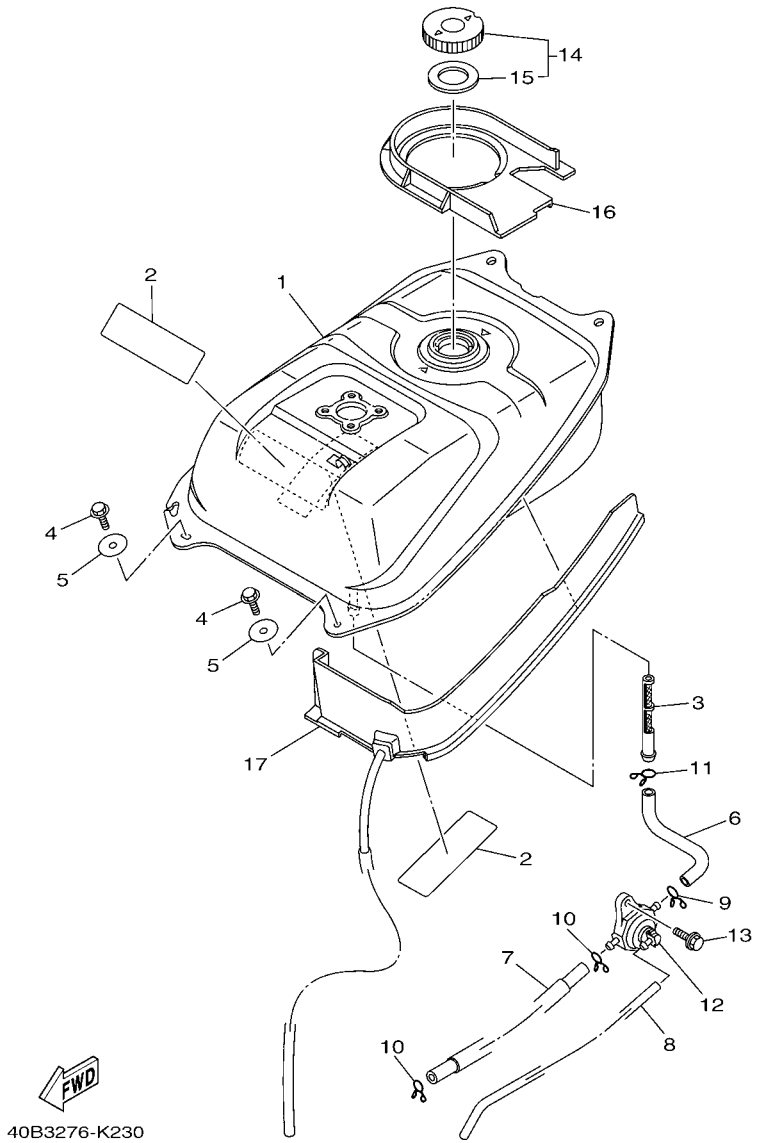

FIG. 23 DEPOSITO DE COMBUSTIBLE FUEL TANK

REF. Nº	CODIGO Nº PART NO.	DESCRIPCION DESCRIPTION	40B7					OBSERVACIONES REMARKS
1	4S9–F4110–02	DEPOSITO DE COMBUSTIBLE COMP. FUEL TANK COMP.	1					
2	4S9–F414G–11	SELLO SEAL	2					
3	4S9–F4514–00	RED DE FILTRO 1 NET, FILTER 1	1					
4	95822–06016	TORNILLO DE REBORDE BOLT, FLANGE	2					
5	90201–06816	ARANDELA PLANA WASHER, PLATE	2					
6	4S9–F4311–00	TUBO DE COMBUSTIBLE 1 PIPE, FUEL 1	1					
7	4S9–F4312–00	TUBO 2 PIPE 2	1					
8	4S9–F4313–00	TUBO 3 PIPE 3	1					
9	90467–10803	PRESILLA CLIP	1					
10	90467–09006	PRESILLA CLIP	2					
11	90467–11801	PRESILLA CLIP	1					
12	4S9–F4500–01	GRIFO DE COMBUSTIBLE 1 FUEL COCK ASSY 1	1					
13	95802–06014	TORNILLO DE REBORDE BOLT, FLANGE	1					
14	4S9–F4610–01	TAPA COMPLETA CAP ASSY	1					
15	4S9–F4612–01	.EMPAQUE DE TAPA .PACKING, CAP	1					
16	4S9–F4141–00	PROTECTOR DEPOSITO COMBUST. PROTECTOR, FUEL TANK	1					
17	4S9–F4188–01	MOLDURA DEPOSITO COMBUST. MOLD, FUEL TANK	1					

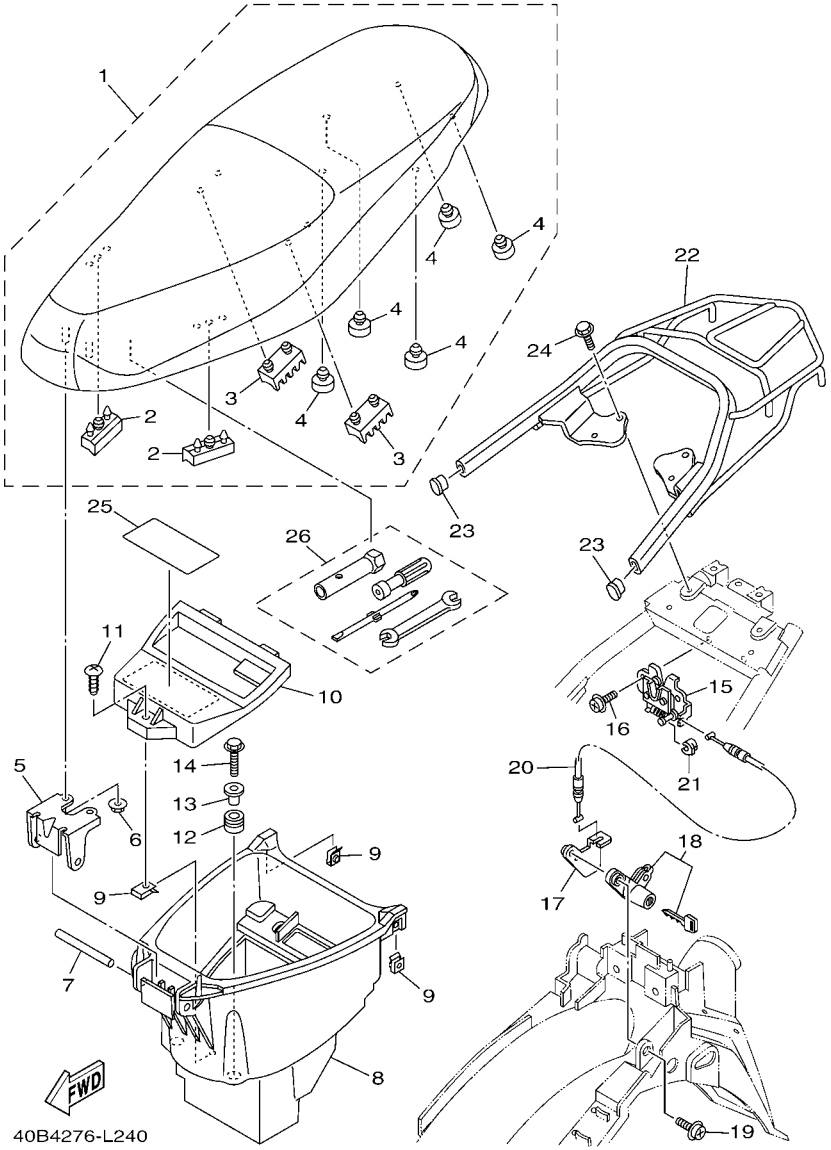

FIG. 24 ASIENTO SEAT

REF. Nº	CODIGO Nº PART NO.	DESCRIPCION DESCRIPTION	40B7					OBSERVACIONES REMARKS
1	4S9–F4730–10	SILLIN DOBLE COMPLETO DOUBLE SEAT ASSY	1					
2	4S9–F4747–00	.AMORTIGUADOR DE ASIENTO .DAMPER, SEAT	2					
3	4S9–F4723–00	.AMORTIGUADOR DE ASIENTO .DAMPER, SEAT	2					
4	4S9–F4741–00	.COJIN DE ASIENTO .PAD, SEAT	5					
5	4S9–F4726–00	HINGE SEAT HINGE, SEAT	1					
6	95702–06500	TUERCA DE BRIDA NUT, FLANGE	2					
7	4S9–F4727–00	PASADOR ACCESORIO DE ASIENTO PIN, SEAT FITTING	1					
8	4S9–F473R–00	CAJA 1 BOX 1	1					
9	90183–05807	TUERCA DE RESORTE NUT, SPRING	3					
10	4S9–F473T–00	TAPA 1 LID 1	1					
11	97702–50016	TORNILLO ROSCA HEMBRA SCREW, TAPPING	1					
12	90480–14806	TAPON GROMMET	4					
13	90387–068K6	ESPACIADOR COLLAR	4					
14	95022–06025	PERNO, DE BRIDA BOLT, FLANGE	4					
15	4S9–F4780–00	CERRADURA SILLIN COMPLETO SEAT LOCK ASSY	1					
16	98502–06012	TORNILLO SCREW, PAN HEAD	2					
17	4S9–F117K–00	SOPORTE DE CERRADURA STAY, LOCK	1					
18	4S9–WF470–00	JUEGO DE ROTOR ROTOR SET	1					
19	90159–06867	TORNILLO CON VALONA SCREW, WITH WASHER	1					
20	4S9–F478E–00	CABLE CABLE, SEAT LOCK	1					
21	4S9–F4768–00	TOPE STOPPER	1					
22	4S9–F4773–01	MANIJA DE ASIENTO HANDLE, SEAT	1					
23	4S9–F4742–00	ANILLO PROTECTOR GROMMET	2					
24	95812–06020	TORNILLO DE REBORDE BOLT, FLANGE	4					
25	40B–F4875–10	ETIQUETA 1 LABEL 1	1					
26	4S9–F8100–00	JUEGO DE HERRAMIENTAS TOOL KIT	1					

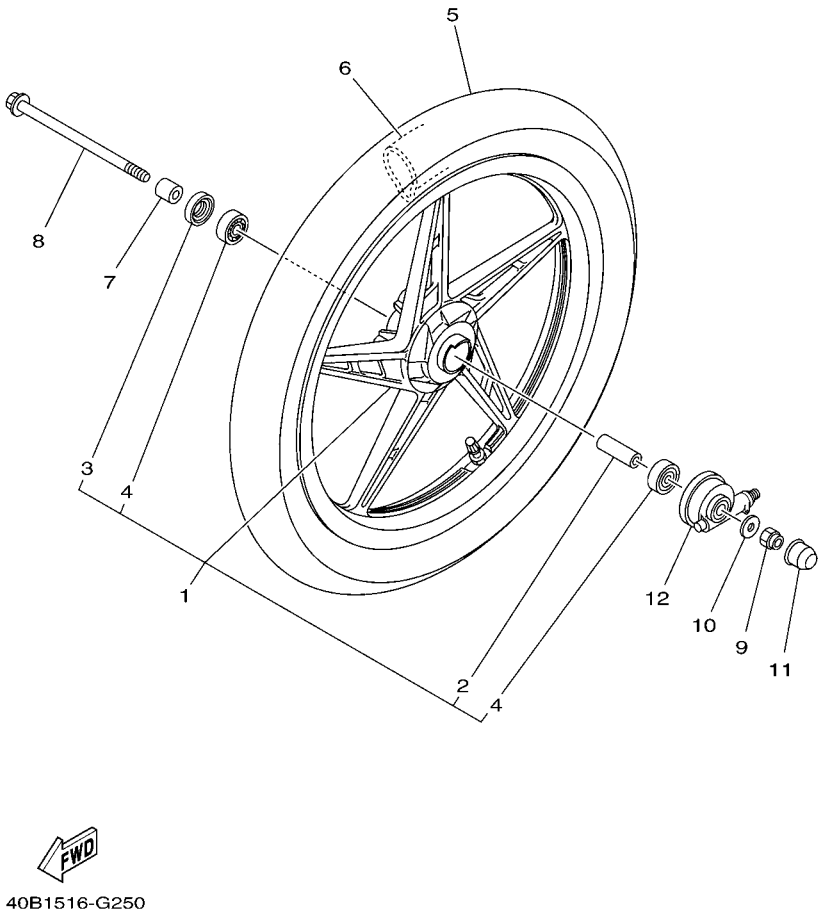

FIG. 25 RUEDA DELANTERA FRONT WHEEL

REF. Nº	CODIGO Nº PART NO.	DESCRIPCION DESCRIPTION	40B7					OBSERVACIONES REMARKS
1	4S9–F5160–30–33	RUEDA FUNDIDA DELANTERA CAST WHEEL, FRONT	1					YB YB
2	90560–10292	.SEPARADOR .SPACER	1					
3	93106–20826	.SELLO ACEITE .OIL SEAL	1					
4	93306–300Y4	.COJINETE .BEARING	2					
5	94107–17842	NEUMATICO (70/90-17 M/C 38H) TIRE (70/90-17 M/C 38H HF314A)	1					DURO DURO
6	94207–17808	TUBO (2.50/2.75, 70-80/90-17) TUBE (2.50/2.75, 70-80/90-17)	1					DURO DURO
7	90387–10828	ESPACIADOR COLLAR	1					
8	4S9–F5181–00	EJE DE LA RUEDA AXLE, WHEEL	1					
9	90185–10807	TUERCA AUTOBLOCANTE NUT, SELF-LOCKING	1					
10	90201–10831	ARANDELA PLANA WASHER, PLATE	1					
11	40B–F5188–00	TAPA CAP	1					
12	4S9–F5190–10	UNIDAD DE ENGRANAJE COMPLETA GEAR UNIT ASSY	1					

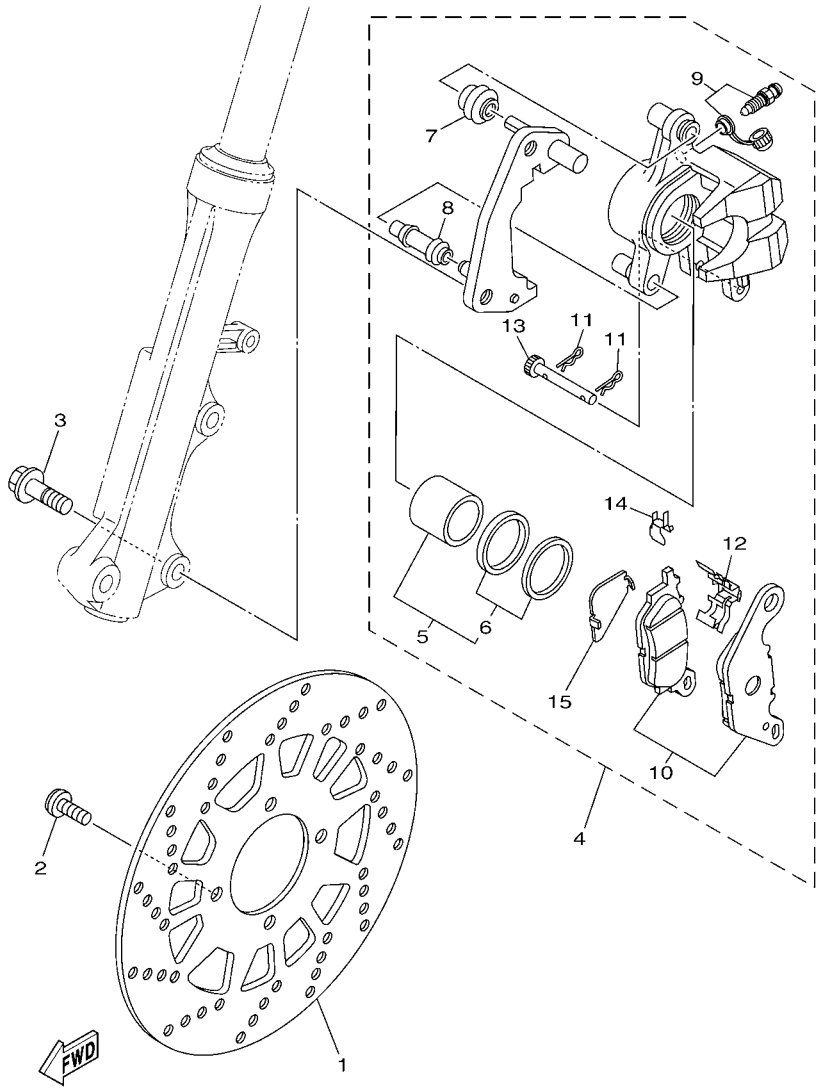

FIG. 26 CALIBRE FRENO DELANTERA FRONT BRAKE CALIPER

REF. Nº	CODIGO Nº PART NO.	DESCRIPCION DESCRIPTION	40B7					OBSERVACIONES REMARKS
1	40B–F582U–00	DISCO DE FRENO (DERECHO) DISK, BRAKE (RIGHT)	1					
2	90111–08853	TORNILLO BOLT,HEX. SOCKET BUTTON	4					
3	90105–10824	TORNILLO BOLT, FLANGE	2					
4	4S9–F580U–01	CALIBRE COMPLETO (DERECHO) CALIPER ASSY (RIGHT)	1					
5	4S5–W0057–00	.PISTON COMPLETO PINZA .PISTON ASSY, CALIPER	1					
6	4S5–W0047–00	..JUEGO DE RETENES DE PINZA ..CALIPER SEAL KIT	1					
7	4S5–F5917–00	.FUNDA DE CALIBRE .BOOT, CALIPER	1					
8	4S5–F5937–00	.FUNDA .BOOT 2	1					
9	4S5–W0048–01	.CJTO TORNILLO DE PURGA .BLEED SCREW KIT	1					
10	4S5–W0045–00	.JUEGO DE COJIN DE FRENO .BRAKE PAD KIT	1					
11	4S5–F5925–00	.PRESILLA .CLIP	2					
12	4S5–F5919–00	.SOPORTE DE PASTILLAS .SUPPORT, PAD	1					
13	4S5–F5924–01	.PASADOR .PIN, PAD	1					
14	4S5–F5939–00	.PRESILLA .CLIP, PAD	1					
15	4S9–F5827–00	.CUNA DE CALIBRE .SHIM, CALIPER	1					

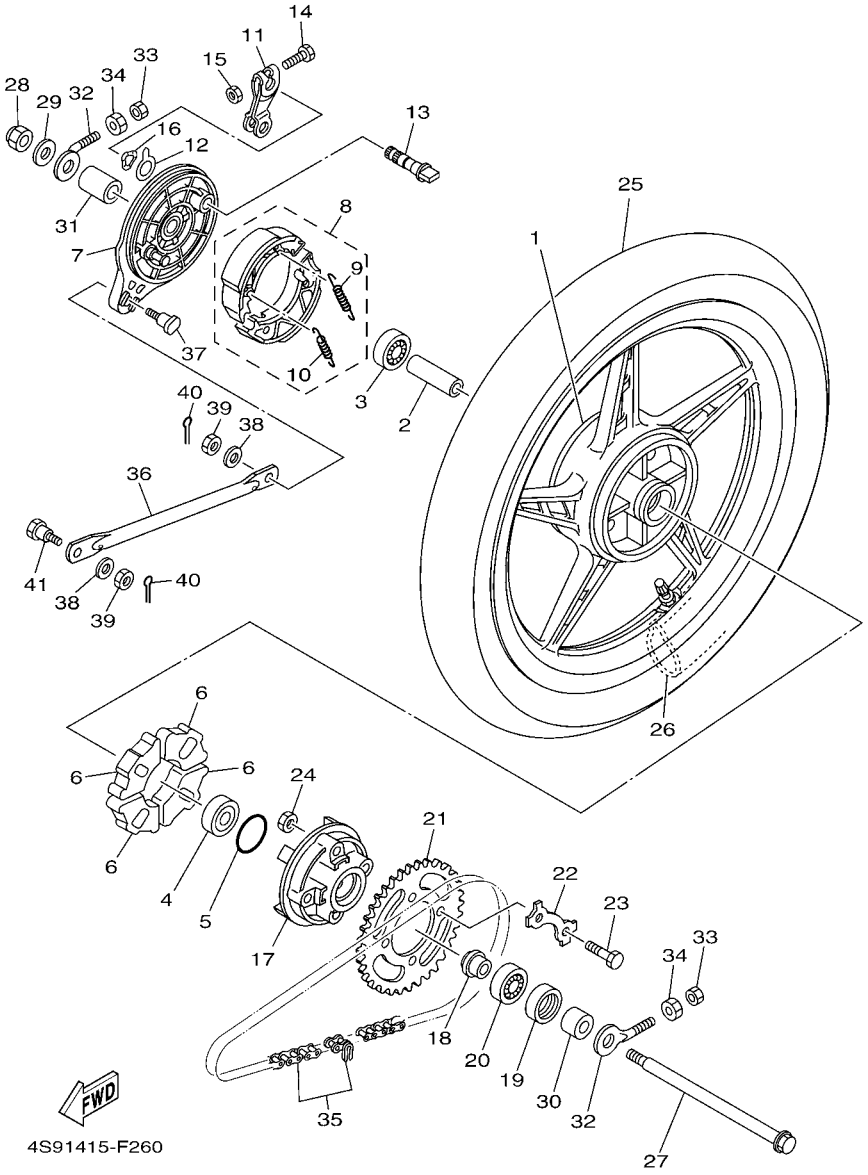

FIG. 27 RUEDA TRASERA REAR WHEEL

REF. Nº	CODIGO Nº PART NO.	DESCRIPCION DESCRIPTION	40B7					OBSERVACIONES REMARKS
1	4S9–F5338–00–33	RUEDA FUNDIDA TRASERA CAST WHEEL, REAR	1					YB YB
2	90387–12844	ESPACIADOR COLLAR	1					
3	93306–301XG	COJINETE BEARING	1					
4	93306–301XH	COJINETE BEARING	1					
5	93210–41041	ANILLO O O-RING	1					
6	4S9–F5364–00	AMORTIGUADOR DAMPER	4					
7	4S9–F5321–00–33	PLACA DE ZAPATA DE FRENO PLATE, BRAKE SHOE	1					YB YB
8	4S9–WF530–00	JUEGO DE ZAPATA DE FRENO BRAKE SHOE SET	1					
9	90506–12801	.RESORTE DE TENSION .SPRING, TENSION	1					
10	90506–15802	.RESORTE DE TENSION .SPRING, TENSION	1					
11	4S9–F5355–00	PALANCA DE ARBOL DE LEVAS LEVER, CAMSHAFT	1					
12	4S9–F533A–00	PLACA INDICADOR PLATE, INDICATOR	1					
13	4S9–F5351–00	ARBOL DE LEVAS CAMSHAFT	1					
14	90101–06818	TORNILLO BOLT	1					
15	95302–06600	TUERCA NUT	1					
16	90206–14093	ARANDELA ONDULADA WASHER, WAVE	1					
17	4S9–F5366–00–33	EMBRAGUE DE MASA CLUTCH, HUB	1					YB YB
18	93106–26823	SELLO ACEITE OIL SEAL	1					
19	90387–127Y0	ESPACIADOR COLLAR	1					
20	93306–054Y0	COJINETE BEARING	1					
21	4S9–F5435–20	CORONA (35T) SPROCKET, DRIVEN (35T)	1					
22	4S9–F5412–00	ARANDELA WASHER	2					
23	90101–08847	TORNILLO BOLT	4					
24	90179–08639	TUERCA NUT	4					
25	94108–17841	NEUMATICO (80/90-17 M/C 50P) TIRE (80/90-17 M/C 50P HF314A)	1					DURO DURO
26	94207–17808	TUBO (2.50/2.75, 70-80/90-17) TUBE (2.50/2.75, 70-80/90-17)	1					DURO DURO
27	4S9–F5381–00	EJE DE RUEDA AXLE, WHEEL	1					

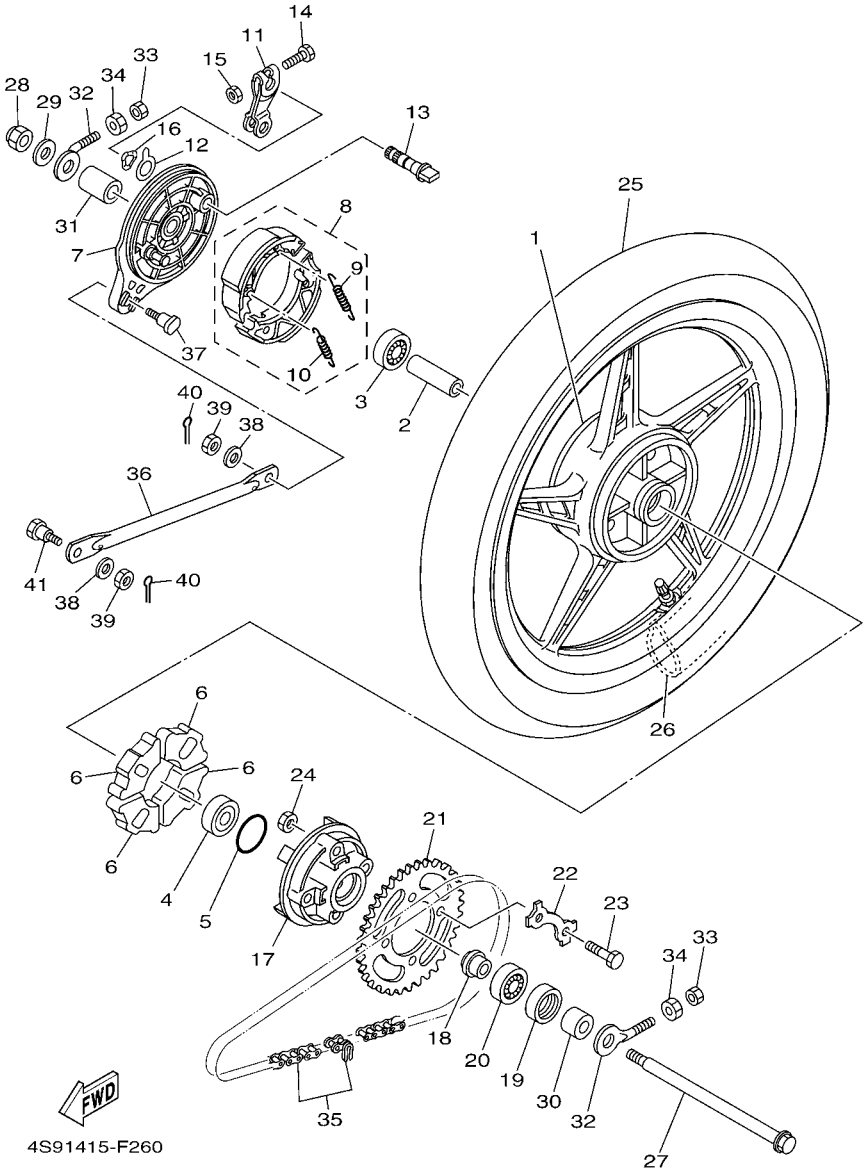

FIG. 27 RUEDA TRASERA REAR WHEEL

REF. Nº	CODIGO Nº PART NO.	DESCRIPCION DESCRIPTION	40B7					OBSERVACIONES REMARKS
28	90185–12804	TUERCA AUTOBLOCANTE NUT, SELF-LOCKING	1					
29	90201–12826	ARANDELA PLANA WASHER, PLATE	1					
30	4S9–F5383–00	COLLAR DE RUEDA COLLAR, WHEEL	1					
31	90387–12841	ESPACIADOR COLLAR	1					
32	4S9–F5389–00	TIRADOR DE CADENA 2 PULLER, CHAIN 2	2					
33	95307–06600	TUERCA NUT	2					
34	90170–06809	TUERCA NUT	2					
35	94568–B7098	CADENA CHAIN	1					
36	4S9–F5371–00	BARRA TENSORA BAR, TENSION	1					
37	90109–08816	PERNO BOLT	1					
38	92902–08200	ARANDELA WASHER	2					
39	95302–08700	TUERCA NUT	2					
40	91402–20012	CHAVETA PIN, COTTER	2					
41	90109–08848	PERNO BOLT	1					

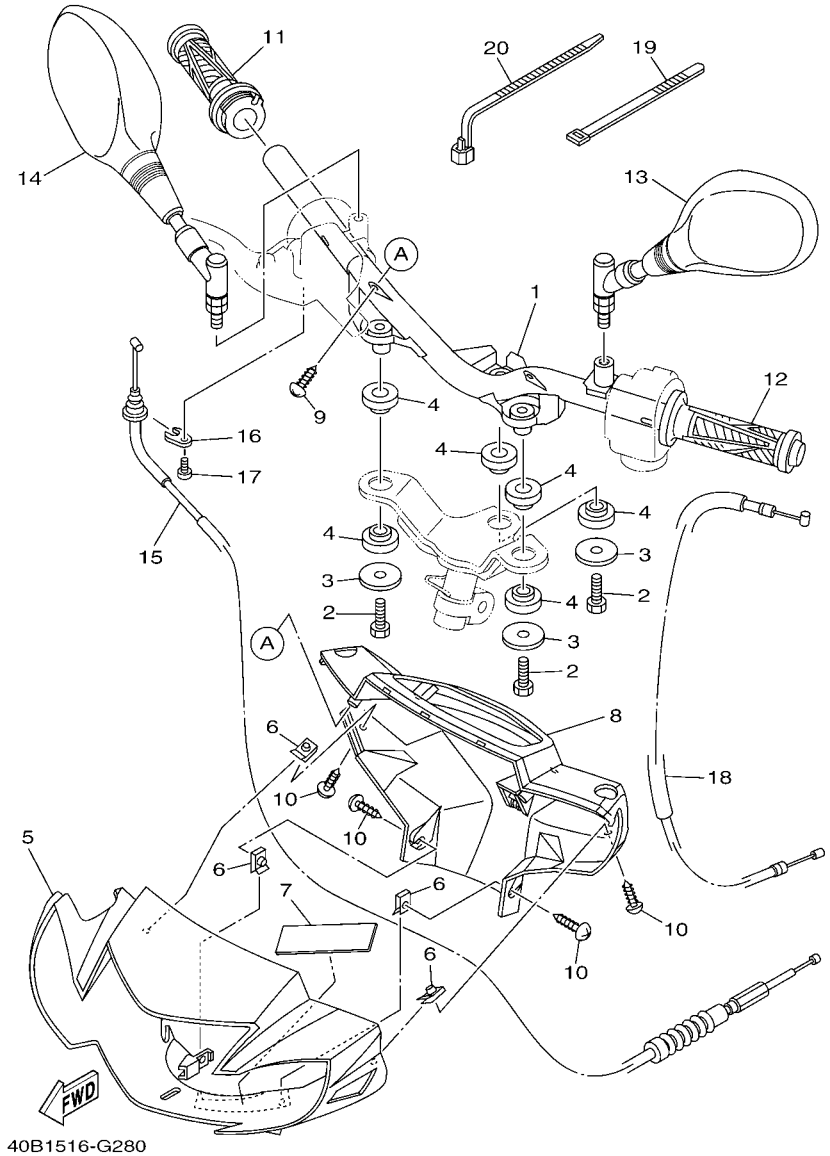

FIG. 28 MANILLAR & CABLE — STEERING HANDLE & CABLE

REF. Nº	CODIGO Nº PART NO.	DESCRIPCION DESCRIPTION	40B7					OBSERVACIONES REMARKS
1	4S9–F6210–01	MANUBRIO HANDLE	1					
2	97002–08016	PERNO BOLT	3					
3	90201–088C4	ARANDELA PLANA WASHER, PLATE	3					
4	4S9–F6113–00	AMORTIGUADOR DAMPER	6					
5	4S9–F6143–01–P0	CUBIERTA DE MANUBRIO SUPERIOR1 COVER,HAND,UPPER 1	1					UR PARA DRMK UR FOR DRMK
	4S9–F6143–01–P2	CUBIERTA DE MANUBRIO SUPERIOR1 COVER,HAND,UPPER 1	1					UR PARA SMX UR FOR SMX
	4S9–F6143–01–P3	CUBIERTA DE MANUBRIO SUPERIOR1 COVER,HAND,UPPER 1	1					UR PARA DPBMC UR FOR DPBMC
6	90183–05807	TUERCA DE RESORTE NUT, SPRING	4					
7	4S9–F6113–20	AMORTIGUADOR DAMPER	1					
8	4S9–F6145–00	CUBIERTA DE MANUBRIO SUPERIOR2 COVER, HAND UPPER 2	1					
9	97702–50016	TORNILLO ROSCA HEMBRA SCREW, TAPPING	2					
10	97702–50012	TORNILLO ROSCA HEMBRA SCREW, TAPPING	4					
11	4S9–F6240–00	EMPUNADURA COMPLETA GRIP ASSY	1					
12	4S9–F6241–00	EMPUNADURA GRIP	1					
13	40B–F6280–00	ESPEJO COMPLETO (IZQUIERDO) REAR VIEW MIRROR ASSY (LEFT)	1					
14	40B–F6290–00	ESPEJO COMPLETO (DERECHO) REAR VIEW MIRROR ASSY (RIGHT)	1					
15	4S9–F6311–01	CABLE DE ACELERADOR 1 CABLE, THROTTLE 1	1					
16	4S9–F6393–01	SOPORTE HOLDER	1					
17	98502–05012	TORNILLO SCREW, PAN HEAD	1					
18	4S9–F6331–00	CABLE DE ARRANQUE CABLE, STARTER 1	1					
19	4S9–H3936–00	BANDA DE CABLE DE INTERRUPTOR BAND, SWITCH CORD	2					
20	90464–45800	BRIDA CLAMP	1					

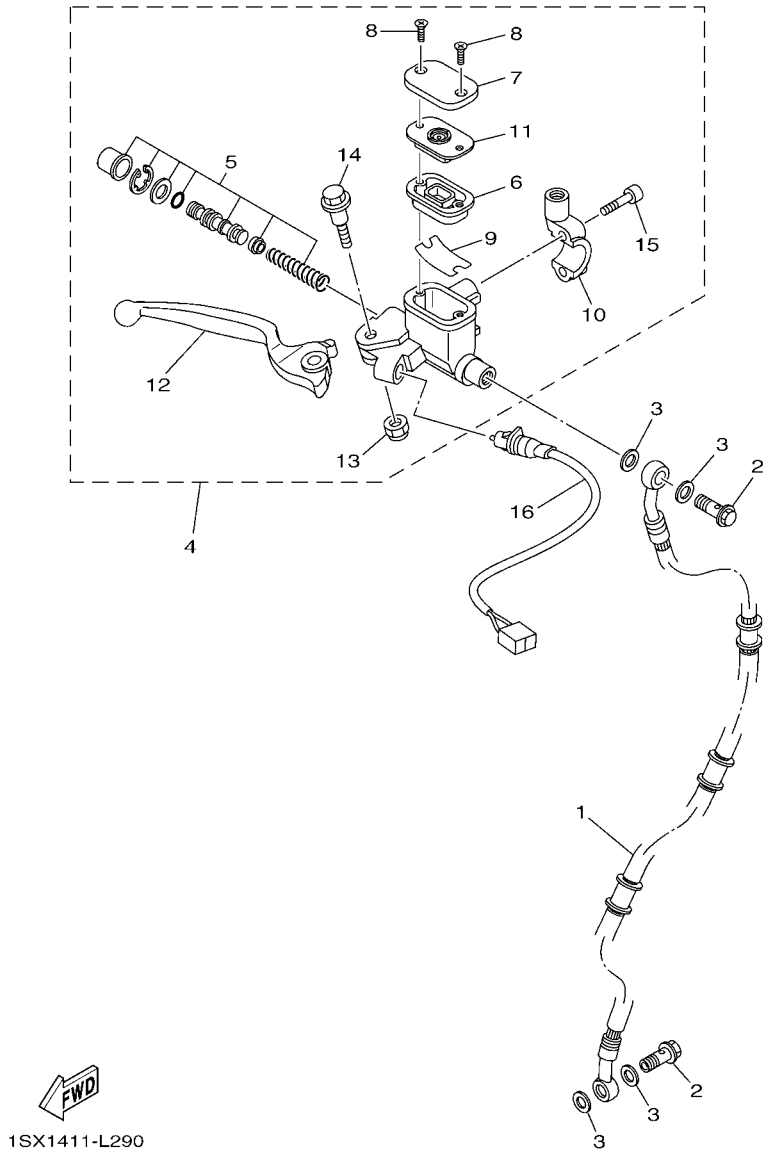

FIG. 29 CILINDRO MAESTRO DELANTERO FRONT MASTER CYLINDER

REF. Nº	CODIGO Nº PART NO.	DESCRIPCION DESCRIPTION	40B7					OBSERVACIONES REMARKS
1	4S9–F5872–01	MANGUERA DE FRENO 1 HOSE, BRAKE 1	1					
2	90401–10823	PERNO DE UNION BOLT, UNION	2					
3	90201–108J9	ARANDELA PLANA WASHER, PLATE	4					
4	4S9–F583T–01	CILINDRO MAESTRO COMPLETO MASTER CYLINDER ASSY	1					
5	4S9–W0041–01	.JUEGO DE CILINDRO MAESTRO .CYLINDER KIT, MASTER	1					
6	4S9–F5854–00	.EMPAQUE,DIAFRAGMA .DIAPHRAGM, RESERVOIR	1					
7	4S9–F5852–00	.TAPA DE TANQUE DE RESERVA .CAP, RESERVOIR	1					
8	4KL–F589H–01	.TORNILLO .SCREW	2					
9	4KL–F5896–00	.PLACA DEP. DE RESERVA .PLATE, RESERVOIR	1					
10	4S9–F5867–00	.SOPORTE DE CILINDRO MAESTRO .BRACKET, MASTER CYLINDER	1					
11	4S9–F5855–00	.BUJE DE DIAFRAGMA .BUSH,DIAPHRAGM	1					
12	4S9–H3922–00	.PALANCA 2 .LEVER 2	1					
13	3D9–F586F–01	.TUERCA AUTOBLOCANTE .NUT, U	1					
14	3D9–F589F–01	.PERNO DE PALANCA .BOLT, LEVER	1					
15	91312–06025	.TORNILLO .BOLT	2					
16	4S9–H3980–01	INTERRUP. DE PARADA DELANTERO FRONT STOP SWITCH ASSY	1					

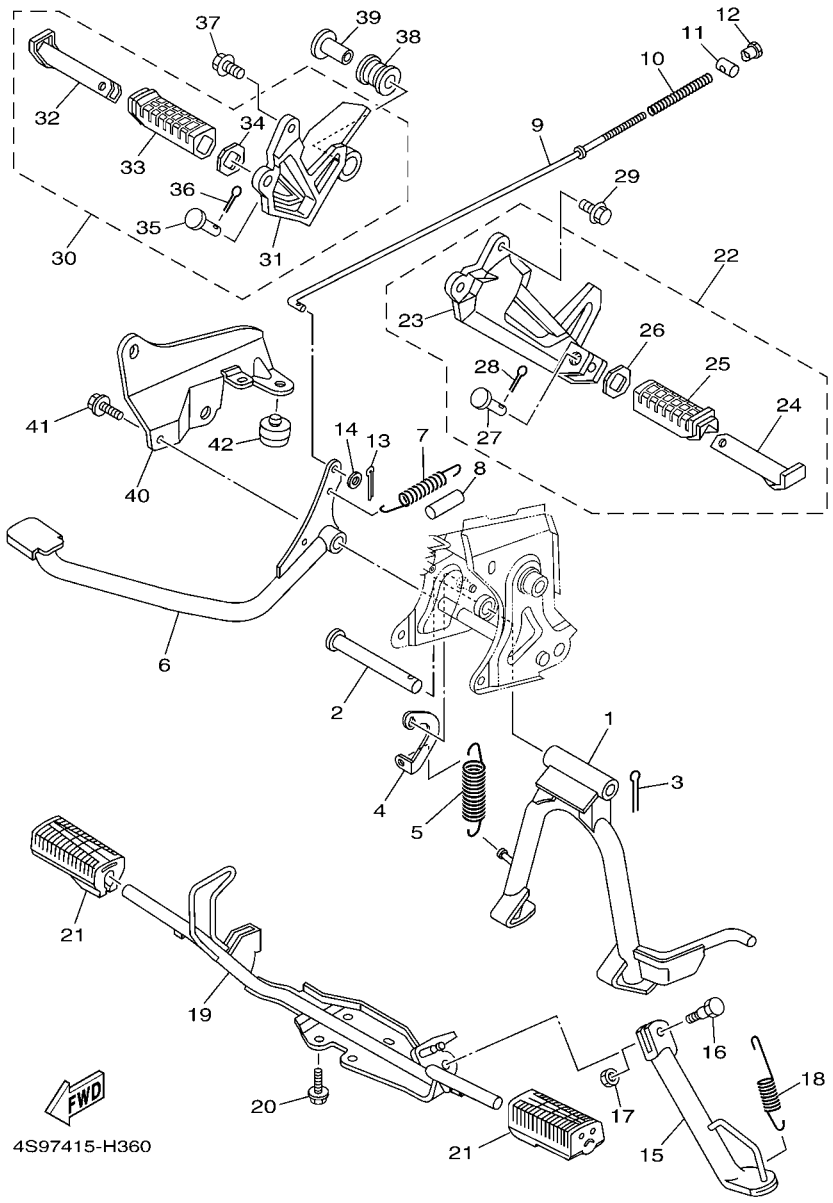

FIG. 30 SOPORTE & APOYAPIE — STAND & FOOTREST

REF. Nº	CODIGO Nº PART NO.	DESCRIPCION DESCRIPTION	40B7					OBSERVACIONES REMARKS
1	4S9–F7111–01	PUNTAL PRINCIPAL STAND, MAIN	1					
2	4S9–F7112–00	EJE DE PUNTAL PRINCIPAL SHAFT, MAIN STAND	1					
3	91402–30030	CHAVETA PIN, COTTER	1					
4	4S9–F7115–00	CONEXION DE PUNTAL PRINCIPAL LINK, MAIN STAND	1					
5	90506–35815	RESORTE DE TENSION SPRING, TENSION	1					
6	4S9–F7211–00	PEDAL DE FRENO PEDAL, BRAKE	1					
7	90506–20810	RESORTE DE TENSION SPRING, TENSION	1					
8	4S9–F7235–00	CUBIERTA DE POLVO COVER, DUST	1					
9	4S9–F7231–00	VARILLA DE FRENO ROD, BRAKE	1					
10	90501–10245	RESORTE DE COMPRESION SPRING, COMPRESSION	1					
11	90249–12008	PASADOR PIN	1					
12	90179–06835	TUERCA NUT	1					
13	91402–20012	CHAVETA PIN, COTTER	1					
14	92907–06600	ARANDELA WASHER, PLATE	1					
15	4S9–F7311–00	PUNTAL LATERAL STAND, SIDE	1					
16	90109–08830	PERNO BOLT	1					
17	90185–08818	TUERCA AUTOBLOCANTE NUT, SELF-LOCKING	1					
18	90506–20829	RESORTE DE TENSION SPRING, TENSION	1					
19	4S9–F7411–00	APOYAPIE 1 FOOTREST 1	1					
20	95822–08016	TORNILLO DE REBORDE BOLT, FLANGE	4					
21	4S9–F7413–00	CUBIERTA DE APOYAPIE COVER, FOOTREST	2					
22	4S9–F7430–01	APOYAPIE POSTERIOR COMPLETO 1 REAR FOOTREST ASSY 1	1					
23	4S9–F7452–00–WN	.SOPORTE, DE APOYAPIE 1 .BRACKET, FOOTREST 1	1					CIS CIS
24	4S9–F7431–01	.APOYAPIE POSTERIOR 1 .FOOTREST, REAR 1	1					
25	4S9–F7433–00	.CUBIERTA APOYAPIE TRASERO .COVER, REAR FOOTREST	1					
26	4S9–F7445–01	.PLACE 1 .PLATE 1	1					
27	91702–08042	.PASADOR DE ADRAZADERA .PIN, CLEVIS	1					

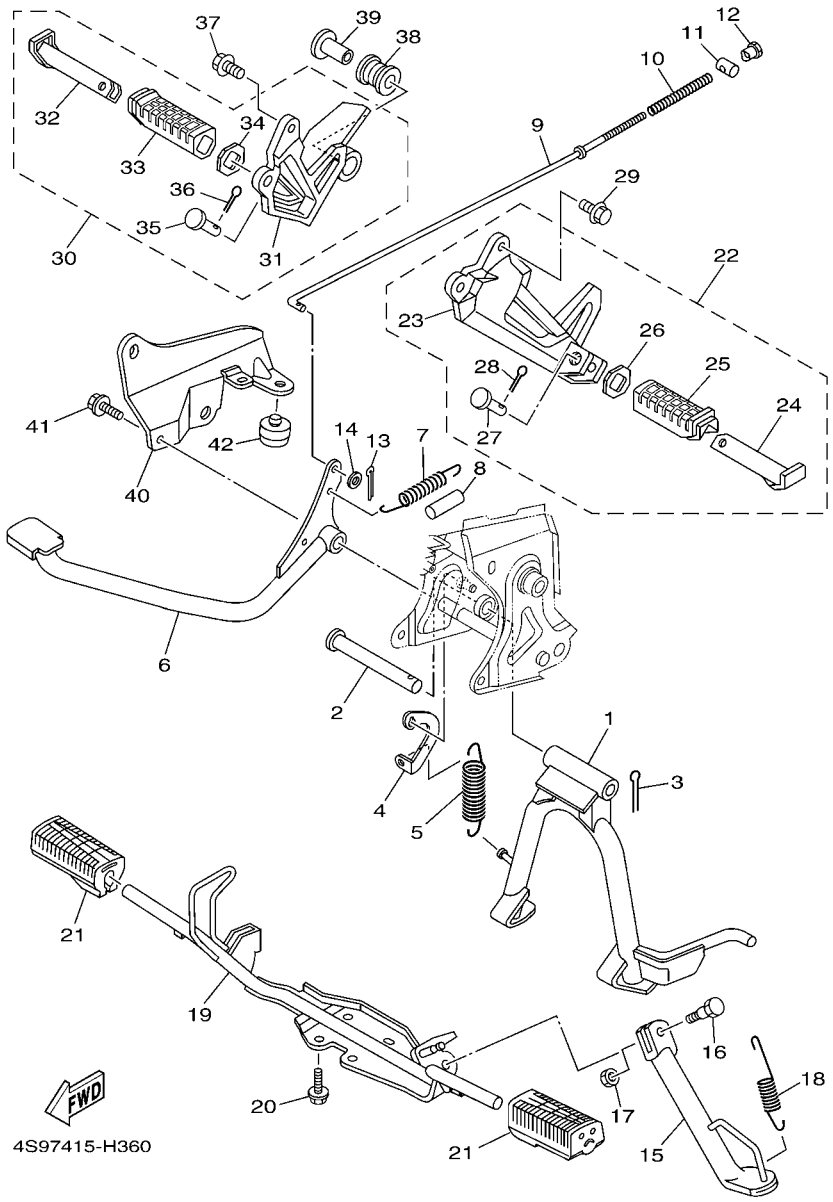

FIG. 30 SOPORTE & APOYAPIE STAND & FOOTREST

REF. Nº	CODIGO Nº PART NO.	DESCRIPCION DESCRIPTION	40B7					OBSERVACIONES REMARKS
28	91402–25015	.CHAVETA .PIN, COTTER	1					
29	95812–08020	TORNILLO DE REBORDE BOLT, FLANGE	2					
30	4S9–F7440–01	APOYAPIE POSTERIOR COMPLETO 2 REAR FOOTREST ASSY 2	1					
31	4S9–F7462–00–WN	.SOPORTE, DE APOYAPIE 2 .BRACKET, FOOTREST 2	1					CIS CIS
32	4S9–F7441–01	.APOYAPIE POSTERIOR 2 .FOOTREST, REAR 2	1					
33	4S9–F7444–00	.CUBIERTA APOYAPIE TRASERO .COVER, REAR FOOTREST	1					
34	4S9–F7445–01	.PLACE 1 .PLATE 1	1					
35	91702–08042	.PASADOR DE ADRAZADERA .PIN, CLEVIS	1					
36	91402–25015	.CHAVETA .PIN, COTTER	1					
37	95812–08020	TORNILLO DE REBORDE BOLT, FLANGE	2					
38	4S9–F7424–00	AMORTIGUADOR DE APOYAPIE 2 DAMPER, FOOTREST 2	1					
39	90387–10817	ESPACIADOR COLLAR	1					
40	4S9–F194J–01	SUPORTE DO SILENCIADOR STAY, MUFFLER	1					
41	95822–08016	TORNILLO DE REBORDE BOLT, FLANGE	1					
42	4S9–F4763–00	COJIN DE ASIENTO 2 PAD, SEAT 2	1					

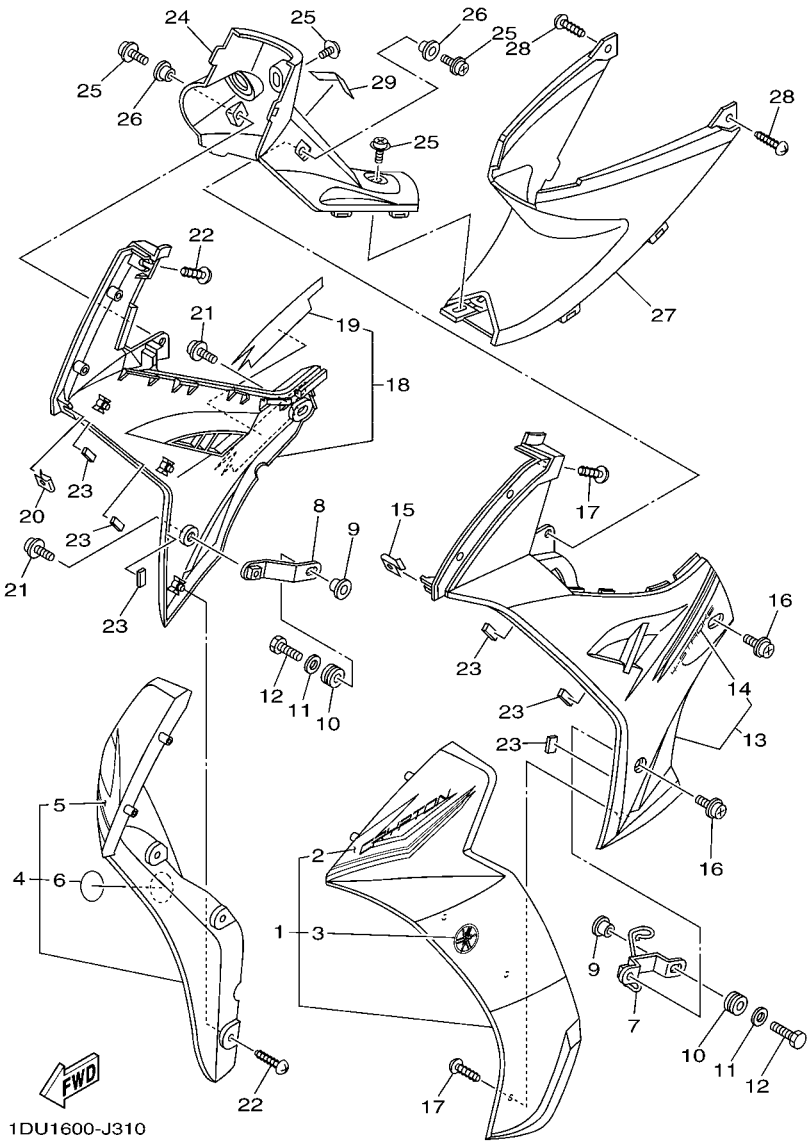

FIG. 31 PATA PROTEGIDA LEG SHIELD

REF. Nº	CODIGO Nº PART NO.	DESCRIPCION DESCRIPTION	40B7					OBSERVACIONES REMARKS
1	4S9–XF831–10–P0	PROTECCION DE PATA 1 LEG SHIELD 1	1					UR PARA DRMK UR FOR DRMK
	4S9–XF831–10–P1	PROTECCION DE PATA 1 LEG SHIELD 1	1					UR PARA SMX UR FOR SMX
	4S9–XF831–10–P3	PROTECCION DE PATA 1 LEG SHIELD 1	1					UR PARA DPBMC UR FOR DPBMC
2	4S9–F8391–30	.CALCOMANIA 1 .GRAPHIC 1	1					UR PARA DRMK UR FOR DRMK
	4S9–F8391–40	.CALCOMANIA 1 .GRAPHIC 1	1					UR PARA SMX UR FOR SMX
	4S9–F8391–50	.CALCOMANIA 1 .GRAPHIC 1	1					UR PARA DPBMC UR FOR DPBMC
3	4S9–F411B–00	.EMBLEMA .EMBLEM	1					
4	4S9–XF832–30–P0	PROTECCION DE PATA 2 LEG SHIELD 2	1					UR PARA DRMK UR FOR DRMK
	4S9–XF832–30–P1	PROTECCION DE PATA 2 LEG SHIELD 2	1					UR PARA SMX UR FOR SMX
	4S9–XF832–30–P3	PROTECCION DE PATA 2 LEG SHIELD 2	1					UR PARA DPBMC UR FOR DPBMC
5	4S9–F8392–30	.CALCOMANIA 2 .GRAPHIC 2	1					UR PARA DRMK UR FOR DRMK
	4S9–F8392–40	.CALCOMANIA 2 .GRAPHIC 2	1					UR PARA SMX UR FOR SMX
	4S9–F8392–50	.CALCOMANIA 2 .GRAPHIC 2	1					UR PARA DPBMC UR FOR DPBMC
6	4S9–F411B–00	.EMBLEMA .EMBLEM	1					
7	4S9–F8321–01	SOPORTE STAY 1	1					
8	4S9–F8322–01	SOPORTE 2 STAY 2	1					
9	90387–06814	ESPACIADOR COLLAR	2					
10	90480–13018	TAPON GROMMET	2					
11	90201–06557	ARANDELA PLANA WASHER, PLATE	2					
12	97002–06020	PERNO BOLT	2					
13	4S9–XF838–10–P0	CUBIERTA INFERIOR COVER, UNDER	1					UR SMX PARA DRMK UR SMX FOR DRMK
	4S9–XF838–10–P1	CUBIERTA INFERIOR COVER, UNDER	1					UR BS4 PARA SMX UR BS4 FOR SMX
	4S9–XF838–10–P3	CUBIERTA INFERIOR COVER, UNDER	1					UR PARA DPBMC UR FOR DPBMC
14	4S9–F8398–30	.GRAFICO 5 .GRAPHIC 5	1					UR PARA DRMK UR FOR DRMK
	4S9–F8398–40	.GRAFICO 5 .GRAPHIC 5	1					UR PARA SMX UR FOR SMX
	4S9–F8398–50	.GRAFICO 5 .GRAPHIC 5	1					UR PARA DPBMC UR FOR DPBMC
15	90183–05807	TUERCA DE RESORTE NUT, SPRING	1					

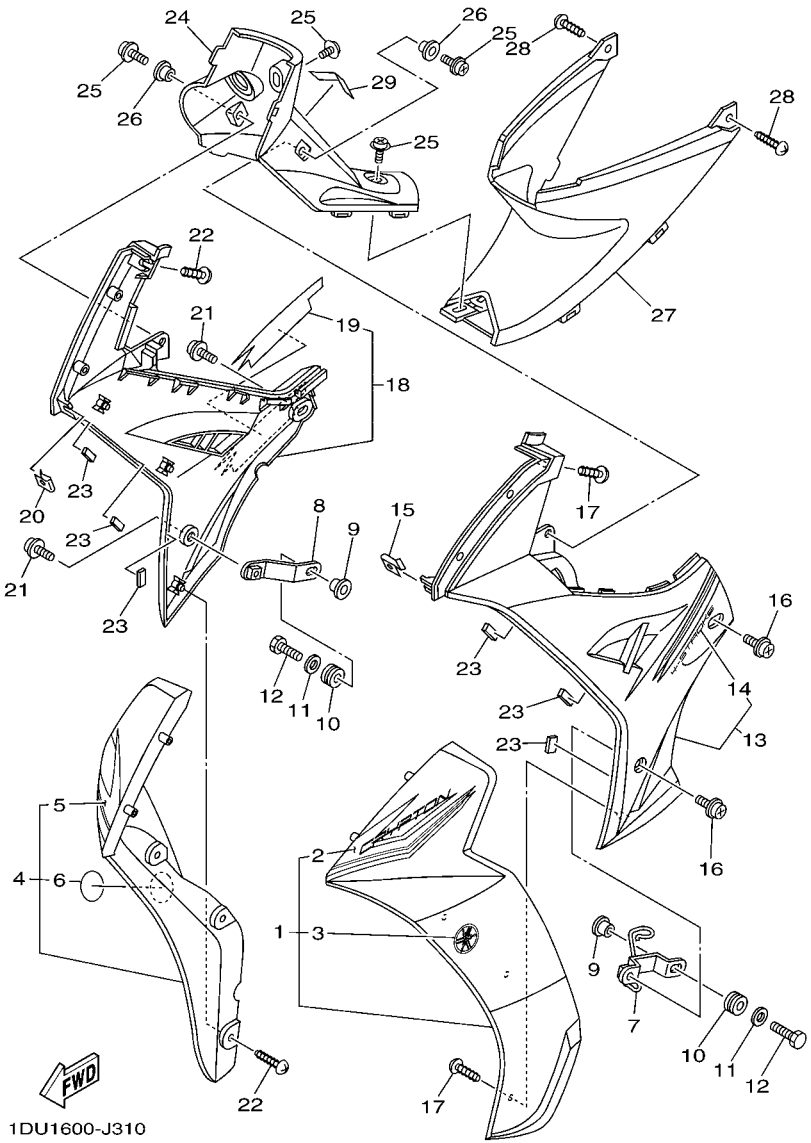

FIG. 31 PATA PROTEGIDA LEG SHIELD

REF. Nº	CODIGO Nº PART NO.	DESCRIPCION DESCRIPTION	40B7					OBSERVACIONES REMARKS
16	90159–06842	TORNILLO CON VALONA SCREW, WITH WASHER	2					
17	97702–50012	TORNILLO ROSCA HEMBRA SCREW, TAPPING	6					
18	4S9–XF839–10–P0	CUBIERTA INFERIOR 2 COVER, UNDER 2	1					UR SMX PARA DRMK UR SMX FOR DRMK
	4S9–XF839–10–P1	CUBIERTA INFERIOR 2 COVER, UNDER 2	1					UR BS4 PARA SMX UR BS4 FOR SMX
	4S9–XF839–10–P3	CUBIERTA INFERIOR 2 COVER, UNDER 2	1					UR PARA DPBMC UR FOR DPBMC
19	4S9–F8399–30	.CALCOMANIA 6 .GRAPHIC 6	1					UR PARA DRMK UR FOR DRMK
	4S9–F8399–40	.CALCOMANIA 6 .GRAPHIC 6	1					UR PARA SMX UR FOR SMX
	4S9–F8399–50	.CALCOMANIA 6 .GRAPHIC 6	1					UR PARA DPBMC UR FOR DPBMC
20	90183–05807	TUERCA DE RESORTE NUT, SPRING	1					
21	90159–06842	TORNILLO CON VALONA SCREW, WITH WASHER	2					
22	97702–50012	TORNILLO ROSCA HEMBRA SCREW, TAPPING	6					
23	4S9–F8371–00	AMORTIGUADOR DAMPER	6					
24	4S9–F842M–00	CUBIERTA 1 COVER 1	1					
25	90159–06842	TORNILLO CON VALONA SCREW, WITH WASHER	4					
26	90387–068E9	ESPACIADOR COLLAR	2					
27	4S9–F842N–00	CUBIERTA 2 COVER 2	1					
28	97702–50016	TORNILLO ROSCA HEMBRA SCREW, TAPPING	2					
29	40B–F1568–S0	ETIQUETA DE PRECAUCION LABEL, WARNING	1					

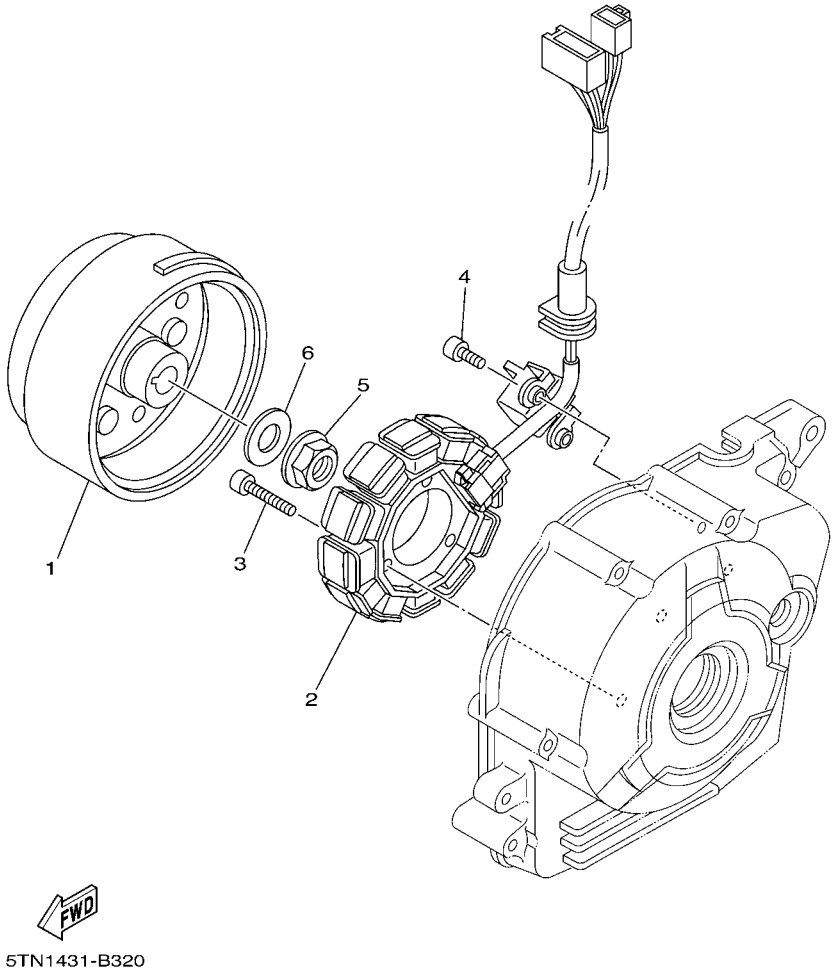

FIG. 32 GENERADOR GENERATOR

REF. Nº	CODIGO Nº PART NO.	DESCRIPCION DESCRIPTION	40B7					OBSERVACIONES REMARKS
1	4S9–H1450–00	ROTOR COMPLETO ROTOR ASSY	1					
2	40B–H1410–00	ESTATOR COMPLETO STATOR ASSY	1					
3	91312–06025	TORNILLO BOLT	3					
4	91312–06014	TORNILLO BOLT	2					
5	95702–12500	TUERCA DE BRIDA NUT, FLANGE	1					
6	90201–12030	ARANDELA PLANA WASHER, PLATE	1					

FIG. 33 MOTOR DE ARRANQUE STARTING MOTOR

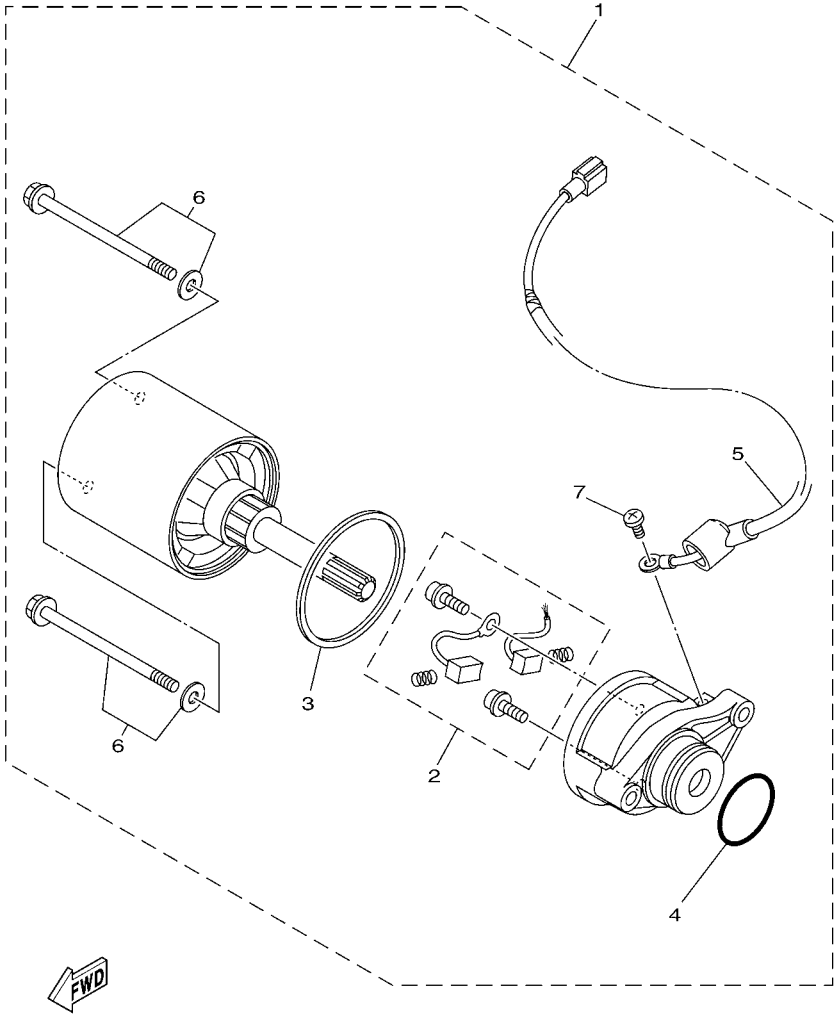

40B4276-L330

REF. Nº	CODIGO Nº PART NO.	DESCRIPCION DESCRIPTION	40B7					OBSERVACIONES REMARKS
1	4S9–H1800–20	MOTOR DE ARRANQUE COMPLETO STARTING MOTOR ASSY	1					
2	4S9–H1801–10	.JUEGO DE ESCOBILLA .BRUSH SET	1					
3	4S9–H1847–00	.ANILLO GOMA .O-RING	1					
4	93210–23614	.ANILLO O .O-RING	1					
5	4S9–H183G–10	.CABLE DEL MOTOR COMPL. .CORD COMP.	1					
6	4S9–H1828–00	.TORNILLO DE EMPUJE 2 .SCREW 2	2					
7	4S9–E1846–00	.TORNILLO, 1 .SCREW, 1	1					

FIG. 34 LUZ DE DESTELLADOR FLASHER LIGHT

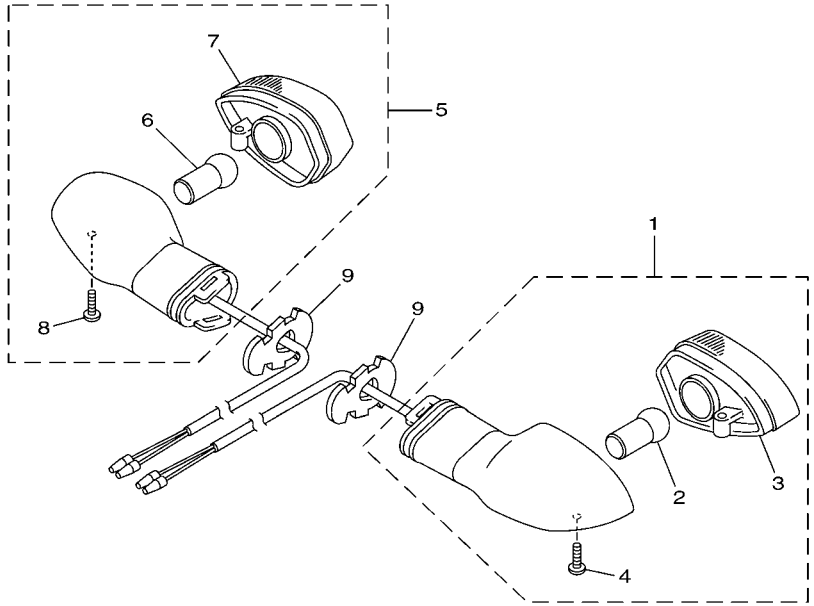

4S91415-F390

REF. Nº	CODIGO Nº PART NO.	DESCRIPCION DESCRIPTION	40B7					OBSERVACIONES REMARKS
1	4S9–H3330–01	DESTELLADOR DE LUZ TRAS.COMPL. REAR FLASHER LIGHT ASSY 1	1					
2	3D9–H3311–10	.BOMBILLA (12V-10W) .BULB, FLASHER (12V-10W)	1					
3	3D9–H334A–00	.LENTES COMPLETO 2 .LENS COMP 2	1					
4	3D9–H3333–10	.TORNILLO ACCESORIO DE LENTE .SCREW, LENS FITTING	1					
5	4S9–H3340–01	DESTELLADOR DE LUZ TRAS.COMPL. REAR FLASHER LIGHT ASSY 2	1					
6	3D9–H3311–10	.BOMBILLA (12V-10W) .BULB, FLASHER (12V-10W)	1					
7	3D9–H333A–00	.LENTES COMPLETO 1 .LENS COMP 1	1					
8	3D9–H3333–10	.TORNILLO ACCESORIO DE LENTE .SCREW, LENS FITTING	1					
9	3D9–H3318–10	SOPORTE DE DESTELLADOR 1 STAY, FLASHER 1	2					

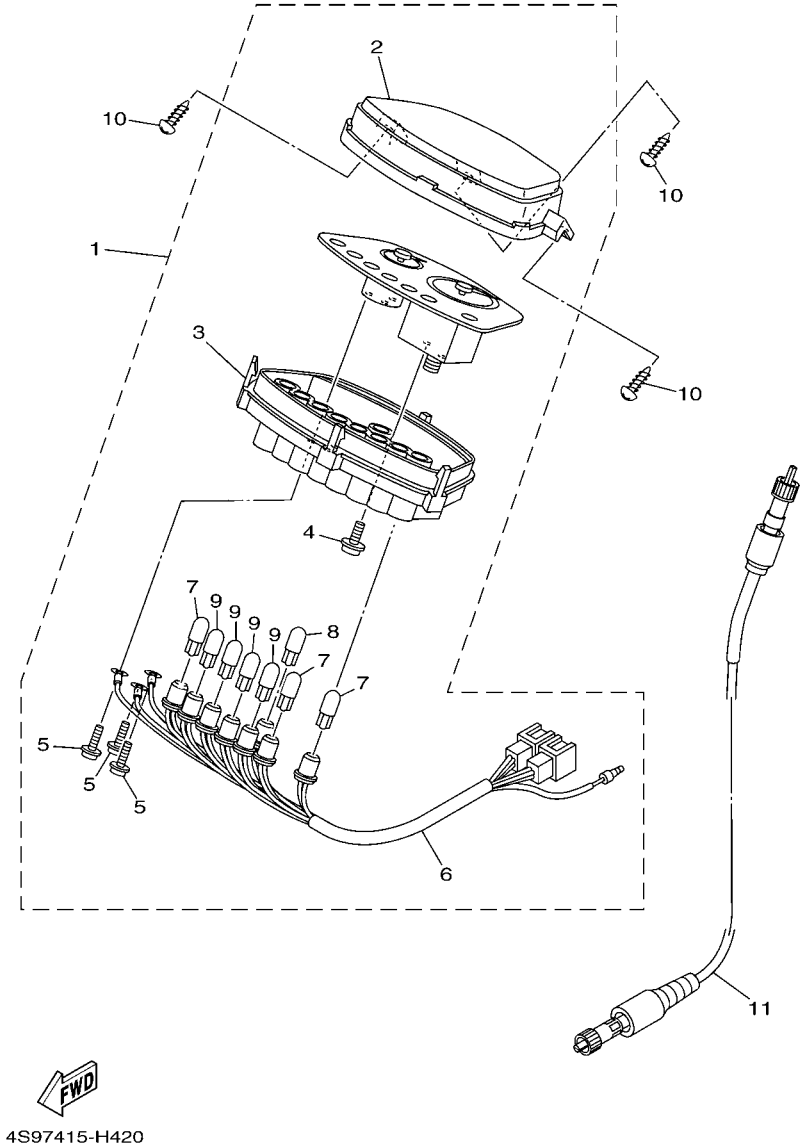

FIG. 35 MEDIDOR METER

REF. Nº	CODIGO Nº PART NO.	DESCRIPCION DESCRIPTION	40B7					OBSERVACIONES REMARKS
1	4S9–H3510–01	VELOCIMETRO COMPL. SPEEDOMETER ASSY	1					
2	4S9–H3511–00	.LENTE DE VELOCIMETRO .LENS, SPEEDOMETER	1					
3	4S9–H353F–00	.CAJA DE MEDIDOR INFERIOR .CASE, METER LOWER	1					
4	90167–04021	.TORNILLO DE ROSCA HEMBRA .SCREW, TAPPING	2					
5	90159–03102	.TORNILLO CON VALONA .SCREW, WITH WASHER	3					
6	4S9–H3509–00	.ENCASTRE DE CABLE COMPLETO .SOCKET CORD ASSY	1					
7	4S9–H3517–00	.AMPOLLETA 1 (T-10 12V-1.7W) .BULB, METER 1 (T-10 12V-1.7W)	3					
8	4S9–H3517–10	.AMPOLLETA 1 (T-10 12V-1.7W) .BULB 1 (T-10 12V-1.7W BULE)	1					
9	4S9–H3518–00	.AMPOLLETA 2 (T-10 12V-3W) .BULB, METER 2 (T-10 12V-3W)	4					
10	97702–50016	TORNILLO ROSCA HEMBRA SCREW, TAPPING	3					
11	4S9–H3550–00	CABLE DE VELOCIMETRO COMPLETO SPEEDOMETER CABLE ASSY	1					

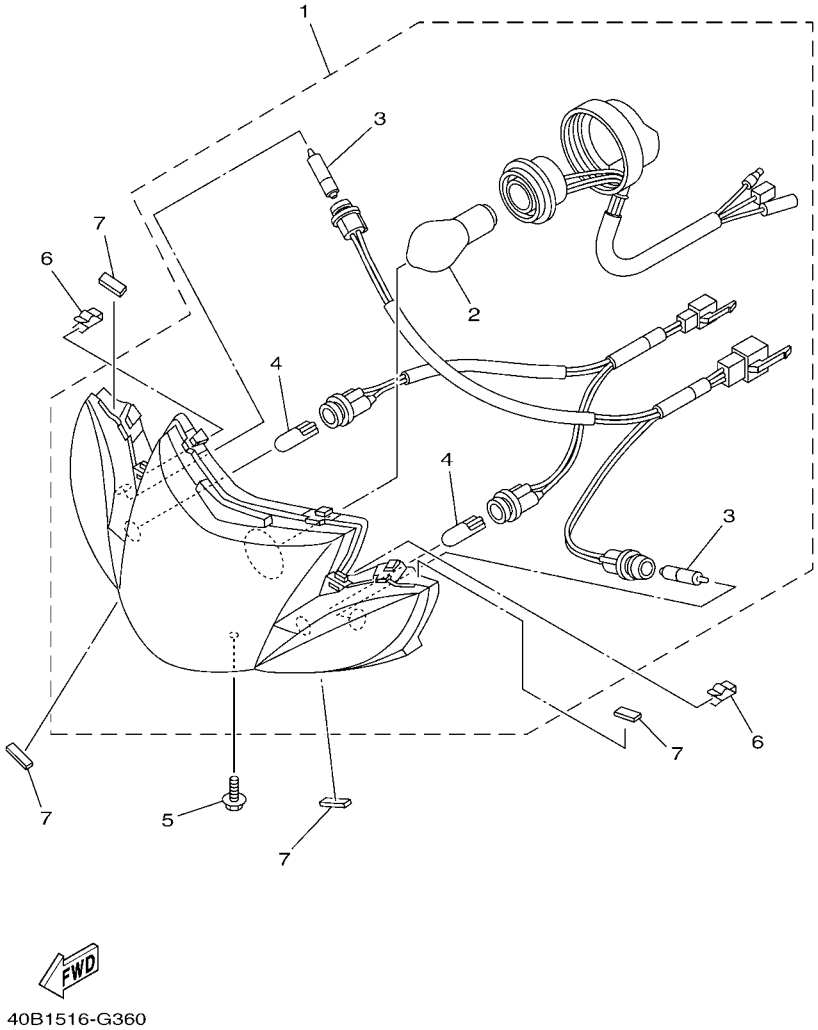

FIG. 36 FARO DELANTERO HEADLIGHT

REF. Nº	CODIGO Nº PART NO.	DESCRIPCION DESCRIPTION	40B7					OBSERVACIONES REMARKS
1	4S9–H4300–10	FARO DELANTERO COMPLETO HEADLIGHT ASSY	1					
2	4S9–H4314–00	.BOMBILLA DE FARO DELANTERO .BULB, HEADLIGHT (12V 35/35W)	1					
3	4S9–H3311–10	.BOMBILLA DE DESTELLADOR .BULB, FLASHER (12V 21W)	2					
4	4S9–H4347–10	.AMPOLLETA LUZ PILOTO (12V W3W .BULB, PILOT LIGHT (12V W3W)	2					
5	90119–05805	TORNILLO CON ARANDELA BOLT, WITH WASHER	1					
6	4S9–H4374–01	PRESILLA CLIP	2					
7	4S9–F6113–10	AMORTIGUADOR DAMPER	4					

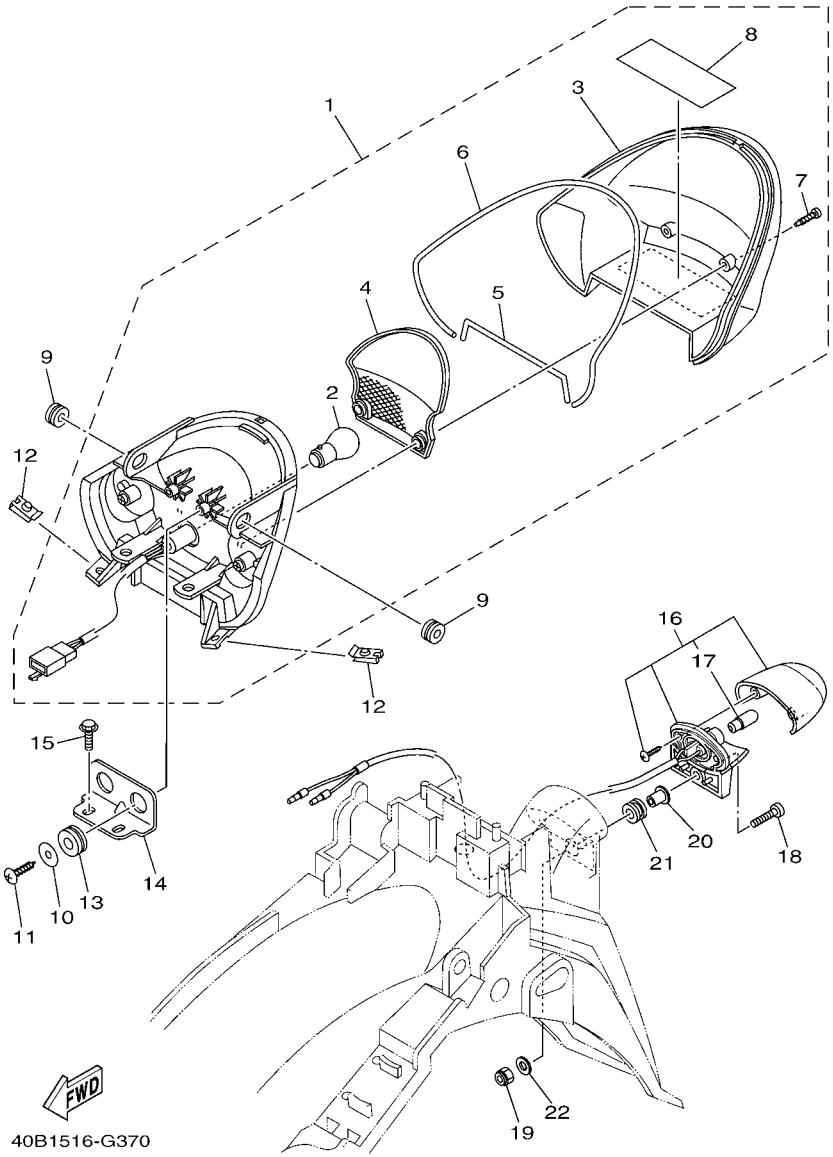

FIG. 37 LUZ DE COLA — TAILLIGHT

REF. Nº	CODIGO Nº PART NO.	DESCRIPCION DESCRIPTION	40B7					OBSERVACIONES REMARKS
1	40B–H4710–00	UNIDAD FARO TRASERO COMPL. TAILLIGHT UNIT ASSY	1					
2	4S9–H4714–00	.BOMBILLA (12V 21/5W) .BULB (12V 21/5W)	1					
3	40B–H4716–00	.CUBIERTA DE FARO TRASERO .COVER, TAILLIGHT	1					
4	4S9–H4721–00	.LENTE DE FARO TRASERO .LENS, TAILLIGHT	1					
5	4S9–H4712–00	.JUNTA, LUZ DE COLA .GASKET, TAILLIGHT	1					
6	4S9–H4723–00	.EMPAQUE LENTE FARO TRASERO .GASKET, TAIL LENS	1					
7	97702–40120	.TORNILLO ROSCA HEMBRA .SCREW, TAPPING	2					
8	40B–H4763–00	.CALCOMANIA CUBIERTA COLA .GRAPHIC	1					
9	90480–13005	TAPON GROMMET	2					
10	90201–06843	ARANDELA PLANA WASHER, PLATE	2					
11	97702–50014	TORNILLO ROSCA HEMBRA SCREW, TAPPING	2					
12	90183–05818	TUERCA DE RESORTE NUT, SPRING	2					
13	90480–18895	TAPON GROMMET	2					
14	4S9–H4702–00	SOPORTE DE FARO TRASERO BRACKET, TAILLIGHT	1					
15	95802–06012	TORNILLO DE REBORDE BOLT, FLANGE	2					
16	40B–H4740–00	LUZ DE LICENCIA COMPLETA LICENCE LIGHT ASSY	1					
17	40B–H4744–00	.BOMBILLA (12V-5W) .BULB (12V-5W)	1					
18	98507–05020	TORNILLO DE CABEZA PLANA SCREW, PAN HEAD	1					
19	95602–05100	TUERCA U NUT, U	1					
20	90387–05816	ESPACIADOR COLLAR	1					
21	90480–11008	TAPON GROMMET	1					
22	90201–05812	ARANDELA PLANA WASHER, PLATE	1					

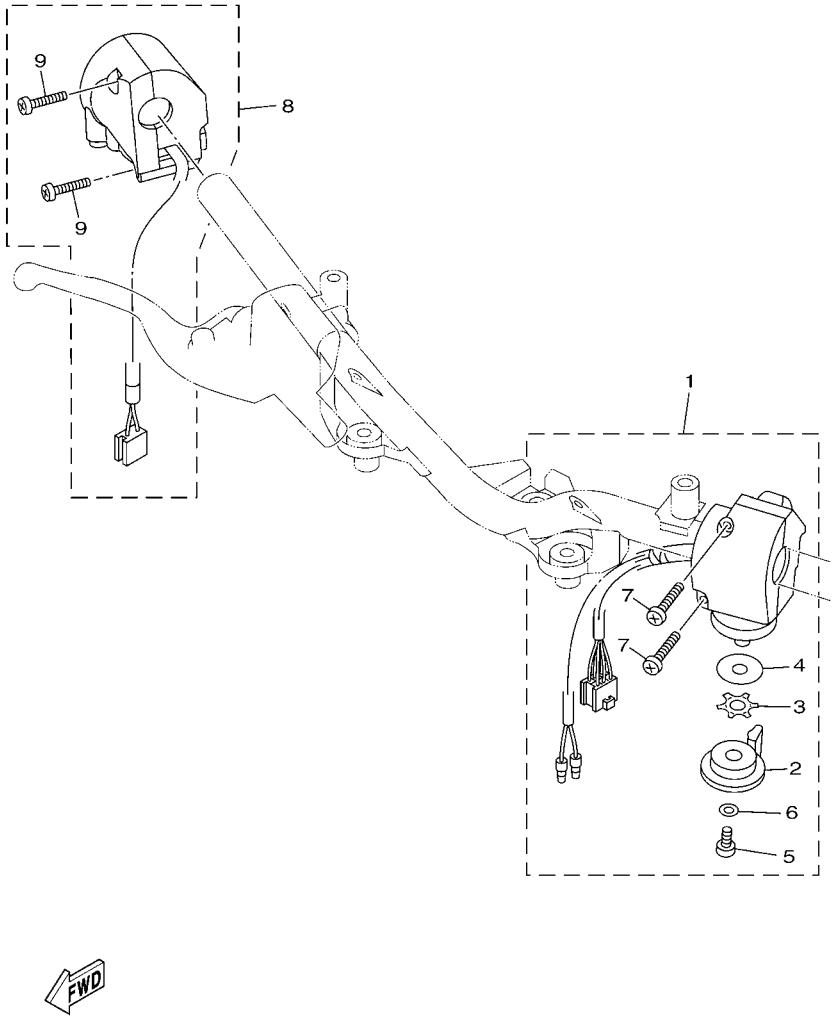

FIG. 38 INTERRUPTOR DE MANILLAR&PALANC HANDLE SWITCH & LEVER

REF. Nº	CODIGO Nº PART NO.	DESCRIPCION DESCRIPTION	40B7					OBSERVACIONES REMARKS
1	4S9–H3973–01	INTERRUPTOR DE MANIJA 3 SWITCH, HANDLE 3	1					
2	4S9–H3941–00	.PALANCA DE ARRANQUE .LEVER, STARTER	1					
3	90209–10131	.ARANDELA DE SEPARACION .WASHER	1					
4	4S9–H397X–00	.ESPACIADOR .SPACER	1					
5	98507–06008	.TORNILLO DE CABEZA PLANA .SCREW, PAN HEAD	1					
6	92902–06200	.ARANDELA .WASHER	1					
7	98507–05025	.TORNILLO DE CABEZA PLANA .SCREW, PAN HEAD	2					
8	40B–H3976–00	INTERRUPTOR DE MANIJA 1 SWITCH, HANDLE 1	1					
9	9850M–05025	.TORNILLO DE CABEZA CON PLANA .SCREW, PAN HEAD	2					

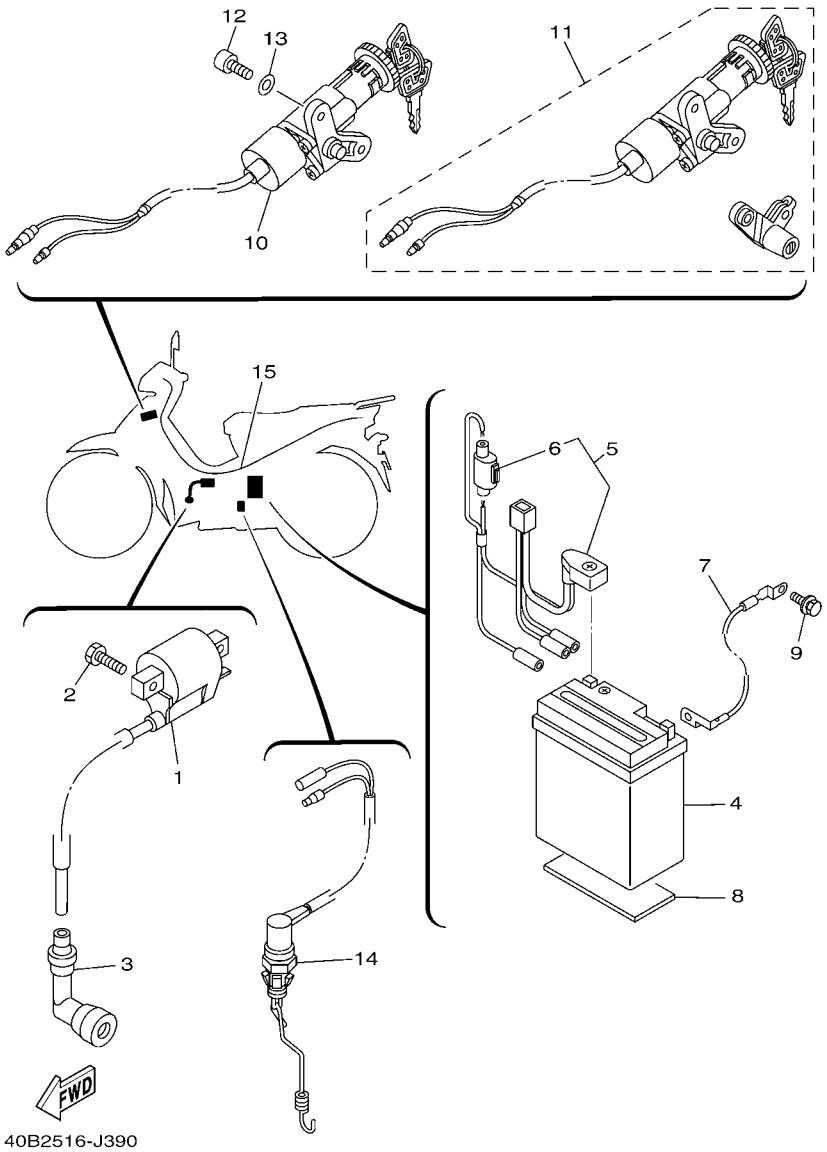

FIG. 39 EQUIPO ELECTRICO 1 ELECTRICAL 1

REF. Nº	CODIGO Nº PART NO.	DESCRIPCION DESCRIPTION	40B7					OBSERVACIONES REMARKS
1	4S9–H2310–00	BOBINA DE ENCENDIDO COMPLETA IGNITION COIL ASSY	1					
2	97002–06016	PERNO BOLT	2					
3	4S9–H2370–10	TAPON DE BUJIA COMPLT PLUG CAP ASSY	1					
4	40B–H2110–00	BATERIA COMPLETA (MS MTX7L-BS) BATTERY ASSY (MS MTX7L-BS)	1					
5	4S9–H2115–00	CABLE CONDUCTOR POSITIVO WIRE, PLUS LEAD	1					
6	4S9–H2151–00	.FUSIBLE (10A) .FUSE (10A)	1					
7	4S9–H2116–00	CABLE CONDUCTOR NEGATIVO WIRE, MINUS LEAD	1					
8	4S9–H2176–00	AMORTIGUADOR DAMPER	1					
9	97527–06510	PERNO CON ARANDELA BOLT, WITH WASHER	1					
10	4S9–H2501–01	LLAVE DE IGNICION COMPLT MAIN SWITCH STEERING LOCK	1					
11	4S9–XH254–01	JUEGO DE LLAVE KEY SET	1					AP AP
12	90149–06811	TORNILLO DE REGLAJE SCREW	2					
13	90201–07808	ARANDELA PLANA WASHER, PLATE	2					
14	4S9–H2530–01	INTERRUPTOR DE PARADA COMPLETO STOP SWITCH ASSY	1					
15	40B–H2590–01	CONJUNTO DE CABLES WIRE HARNESS ASSY	1					

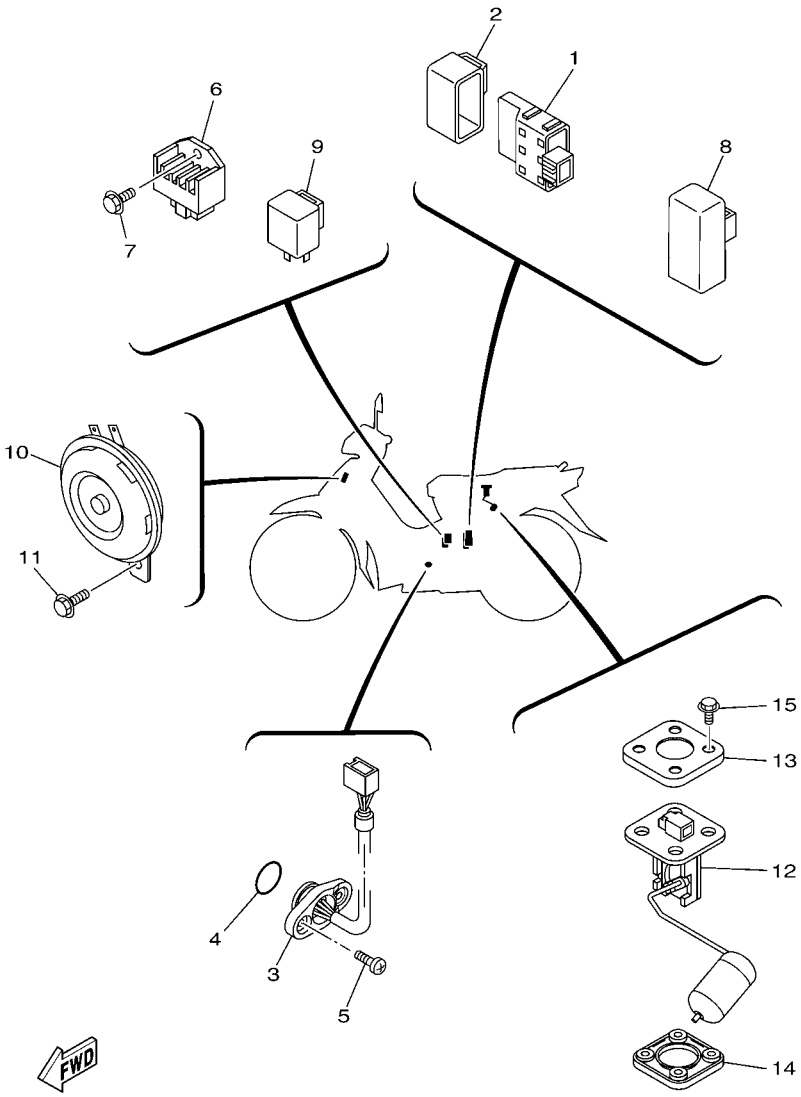

FIG. 40 EQUIPO ELECTRICO 2 ELECTRICAL 2

REF. Nº	CODIGO Nº PART NO.	DESCRIPCION DESCRIPTION	40B7					OBSERVACIONES REMARKS
1	4S9–H5540–00	UNIDAD C.D.I. COMPLETA C.D.I. UNIT ASSY	1					
2	4S9–H5546–00	BANDA BAND	1					
3	4S9–H2540–01	INTERRUPTOR NEUTRAL COMPL NEUTRAL SWITCH ASSY	1					
4	93210–22806	ANILLO O O-RING	1					
5	98502–05010	TORNILLO SCREW, PAN HEAD	2					
6	4S9–H1960–00	RECTIFICADOR Y REGULADOR RECTIFIER & REGULATOR ASSY	1					
7	95022–06014	PERNO, DE BRIDA BOLT, FLANGE	1					
8	4S9–H1940–00	CONJUNTO ARRANCADOR RELEVO STARTER RELAY ASSY	1					
9	4S9–H3350–00	RELE DE DESTELLADOR COMPL. FLASHER RELAY ASSY	1					
10	4S9–H3371–01	BOCINA HORN	1					
11	95802–06010	TORNILLO DE REBORDE BOLT, FLANGE	1					
12	4S9–H5752–00	UNIDAD TRANSM. MED. COMBUST. SENDER UNIT ASSY, FUEL METER	1					
13	4S9–H5757–00	SEGURO RETAINER	1					
14	4S9–H5753–01	EMPAQUE DE UNIDAD TRANSMISORA GASKET, SENDER UNIT	1					
15	90119–05802	TORNILLO CON ARANDELA BOLT, WITH WASHER	4					

INDICE NUMERICO
NUMERICAL INDEX

CODIGO Nº PART NO.	REF. Nº
4ST–11134–11	1 – 2
5TN–14103–00	7 – 21
4GL–14104–00	7 – 20
5TN–1410A–10	7 – 16
5TN–14112–00	7 – 5
5TN–14131–00	7 – 4
22F–14139–00	7 – 29
4S9–14141–18	7 – 14
2MM–14142–17	7 – 11
18A–14143–21	7 – 12
5TN–14147–00	7 – 7
5TN–14148–00	7 – 13
5TN–14150–10	7 – 26
802–14161–00	7 – 2
3RW–14174–00	7 – 17
4GL–14185–00	7 – 15
353–14186–00	7 – 9
5LW–14191–00	7 – 23
32N–14196–00	7 – 24
4NM–14198–00	7 – 3
3DM–14216–00	7 – 28
5TN–14216–00	7 – 25
4GL–14239–00	7 – 8
4S9–1490J–00	7 – 6
5TN–14940–00	7 – 18
256–14956–01	7 – 27
5TN–24423–10	7 – 19
4S9–E1111–10	1 – 1
4S9–E111F–00	4 – 4
4S9–E1166–00	9 – 4
4S9–E1181–00	1 – 13
4S9–E1185–00	1 – 5
5WB–E1186–00	1 – 8
4S9–E1310–00–B0	1 – 16
4S9–E1351–00	1 – 17
4S9–E1422–00	2 – 5
4S9–E1603–20	2 – 11
4S9–E1631–10–A0	2 – 8
5WB–E1633–00	2 – 9
4S9–E1651–00	2 – 4
4S9–E1681–00	2 – 2
4S9–E1846–00	33 – 7
4S9–E2111–00	3 – 1
4S9–E2114–00	3 – 4
4S9–E2117–00	3 – 6
4S9–E2118–00	3 – 5
4S9–E2119–00	3 – 3
4S9–E2121–00	3 – 2

CODIGO Nº PART NO.	REF. Nº
4S9–E2126–00	3 – 7
4S9–E2151–00	3 – 8
5WB–E2156–00	3 – 11
5WB–E2159–00	3 – 9
4S9–E2170–10	4 – 1
4S9–E2176–00	4 – 6
5WB–E2210–00	4 – 13
5WB–E2213–10	4 – 14
4S9–E2231–00	4 – 10
4S9–E2241–00	4 – 11
4S9–E3104–00	5 – 1
4S9–E3324–00	5 – 9
4S9–E3325–00	5 – 2
4S9–E3329–00	5 – 4
4S9–E3411–00	5 – 8
4S9–E3451–00	5 – 10
4S9–E3586–20	6 – 1
4S9–E3595–00	6 – 2
4S9–E4101–01	7 – 1
4S9–E4197–00	7 – 30
4S9–E4411–10	6 – 6
4S9–E4412–00	6 – 8
4S9–E4423–00	6 – 12
4S9–E443E–00	6 – 14
4S9–E4451–01	6 – 7
4S9–E4452–00	6 – 11
4S9–E4453–00	6 – 9
4S9–E4457–00	6 – 10
4S9–E4613–00	8 – 16
1DU–E4711–00	8 – 1
4S9–E4718–01	8 – 2
4S9–E4747–10	8 – 8
4S9–E4766–00	8 – 4
4S9–E5113–00	10 – 11
4S9–E5150–00	9 – 1
4S9–E5155–00	9 – 6
4S9–E5316–00	9 – 15
4S9–E5362–00	10 – 22
4S9–E5371–00	9 – 3
4S9–E5411–00	10 – 1
4S9–E5418–00	10 – 12
4S9–E5421–00	10 – 17
4S9–E5451–00	10 – 2
4S9–E5461–00	10 – 18
4S9–E5492–00	10 – 16
4S9–E5512–00	12 – 1
4S9–E5524–00	12 – 3
4S9–E5580–00	12 – 5

CODIGO Nº PART NO.	REF. Nº
4S9–E5583–00	12 – 6
4S9–E5620–00	11 – 11
4S9–E5641–00	11 – 2
4S9–E5644–00	11 – 6
	12 – 4
4S9–E5660–00	11 – 1
4S9–E5664–00	11 – 9
4S9–E5664–10	11 – 10
4S9–E5671–00	11 – 4
4S9–E6135–00	13 – 24
4S9–E6150–10	13 – 13
4S9–E6154–10	13 – 20
4S9–E6321–10	13 – 16
4S9–E6324–10	13 – 15
4S9–E6346–01	9 – 2
4S9–E6350–10	13 – 21
4S9–E6351–10	13 – 17
4S9–E6356–00	13 – 27
4S9–E6357–00	13 – 26
4S9–E6371–10	13 – 14
4S9–E6512–00	13 – 6
4S9–E6586–00	13 – 7
4S9–E6611–10	13 – 2
4S9–E6620–10	13 – 3
4S9–E6626–10	13 – 4
4S9–E7121–00	14 – 6
4S9–E7131–00	14 – 2
4S9–E7141–00	14 – 3
4S9–E7211–00	14 – 15
4S9–E7231–00	14 – 14
4S9–E7241–00	14 – 13
4S9–E7402–00	14 – 10
4S9–E7411–00	14 – 1
4S9–E8101–00	16 – 1
4S9–E8110–00	16 – 24
4S9–E8113–00	16 – 25
4S9–E8120–00	15 – 7
4S9–E8140–00	16 – 9
4S9–E8152–00	16 – 5
4S9–E8172–00	16 – 3
4S9–E8173–00	16 – 19
4S9–E8179–00	16 – 2
4S9–E817A–00	16 – 20
4S9–E8181–00	16 – 4
4S9–E8185–00	15 – 2
4S9–E8186–00	16 – 21
4S9–E8337–00	16 – 13
4S9–E8511–00	15 – 9

CODIGO Nº PART NO.	REF. Nº
4S9–E8512–00	15 – 10
4S9–E8531–00	15 – 8
4S9–E8540–00	15 – 1
4S9–E8542–00	15 – 5
4S9–E8699–00	16 – 10
40B–F1110–02	17 – 1
4S9–F111D–01	17 – 11
4S9–F113B–00	17 – 8
40B–F113J–00	18 – 14
4S9–F117K–00	24 – 17
4S9–F117R–00	17 – 6
4S9–F139R–00	17 – 5
4S9–F139U–00	17 – 10
40B–F1511–00–P0	18 – 1
40B–F1511–00–P1	18 – 1
40B–F1511–00–P3	18 – 1
4S9–F1518–01	18 – 5
4S9–F153E–00	19 – 17
4S9–F1556–01	18 – 2
40B–F1568–S0	31 – 29
40B–F1611–01	18 – 9
40B–F1668–20	20 – 13
4S9–F1679–20	17 – 7
40B–F1685–00	18 – 12
4S9–F1721–00	19 – 1
4S9–F173E–30	19 – 4
4S9–F173E–40	19 – 4
4S9–F173E–50	19 – 4
4S9–F173F–30	19 – 10
4S9–F173F–40	19 – 10
4S9–F173F–50	19 – 10
4S9–F194J–01	30 – 40
4S9–F2100–01–WN	20 – 1
4S9–F2123–00	20 – 2
4S9–F2141–00	20 – 4
4S9–F2151–01	20 – 3
4S9–F2210–11	20 – 14
4S9–F2310–00	20 – 8
4S9–F2311–00	20 – 9
4S9–F2312–00	20 – 10
4S9–F2315–00	20 – 12
4S9–F3100–22	22 – 1
4S9–F3102–20	22 – 2
4S9–F3103–20	22 – 17
4S9–F3110–10	22 – 7
	22 – 22
4S9–F3111–10	22 – 15
	22 – 30

CODIGO Nº PART NO.	REF. Nº
4S9–F3126–10	22 – 3
4S9–F3136–10	22 – 18
4S9–F3141–10	22 – 14
	22 – 29
4RT–F3144–20	22 – 13
	22 – 28
5WB–F3145–00	22 – 4
	22 – 19
5WB–F3147–00	22 – 16
	22 – 31
5WB–F3152–00	22 – 10
	22 – 25
5WB–F3156–00	22 – 5
	22 – 20
4S9–F3157–10	22 – 9
	22 – 24
5WB–F3158–00	22 – 11
	22 – 26
4S9–F3170–10	22 – 8
	22 – 23
5WB–F3181–00	22 – 12
	22 – 27
4S9–F331E–01	21 – 25
4S9–F3340–10	22 – 32
4S9–F3346–10	22 – 34
4TU–F3411–00	22 – 33
5WB–F3411–00	21 – 4
4KL–F3412–00	21 – 1
5WB–F3412–00	21 – 3
4S9–F3415–00	21 – 7
4S9–F3416–01	21 – 6
4S9–F3418–01	21 – 10
5WG–F341E–00	21 – 2
5WG–F341E–10	21 – 5
4S9–F3461–00	21 – 17
4S9–F3472–00	21 – 27
4S9–F4110–02	23 – 1
4S9–F411B–00	31 – 3
	31 – 6
4S9–F4141–00	23 – 16
4S9–F414G–11	23 – 2
4S9–F4188–01	23 – 17
4S9–F4311–00	23 – 6
4S9–F4312–00	23 – 7
4S9–F4313–00	23 – 8
4S9–F4500–01	23 – 12
4S9–F4514–00	23 – 3
4S9–F4610–01	23 – 14

CODIGO Nº PART NO.	REF. Nº
4S9–F4612–01	23 – 15
4S9–F4723–00	24 – 3
4S9–F4726–00	24 – 5
4S9–F4727–00	24 – 7
4S9–F4730–10	24 – 1
4S9–F473R–00	24 – 8
4S9–F473T–00	24 – 10
4S9–F4741–00	24 – 4
4S9–F4742–00	24 – 23
4S9–F4747–00	24 – 2
4S9–F4763–00	30 – 42
4S9–F4768–00	24 – 21
4S9–F4773–01	24 – 22
4S9–F4780–00	24 – 15
4S9–F478E–00	24 – 20
40B–F4875–10	24 – 25
4S9–F5160–30–33	25 – 1
4S9–F5181–00	25 – 8
40B–F5188–00	25 – 11
4S9–F5190–10	25 – 12
4S9–F5321–00–33	27 – 7
4S9–F5338–00–33	27 – 1
4S9–F533A–00	27 – 12
4S9–F5351–00	27 – 13
4S9–F5355–00	27 – 11
4S9–F5364–00	27 – 6
4S9–F5366–00–33	27 – 17
4S9–F5371–00	27 – 36
4S9–F5381–00	27 – 27
4S9–F5383–00	27 – 30
4S9–F5389–00	27 – 32
4S9–F5412–00	27 – 22
4S9–F5435–20	27 – 21
4S9–F580U–01	26 – 4
4S9–F5827–00	26 – 15
40B–F582U–00	26 – 1
4S9–F583T–01	29 – 4
4S9–F5852–00	29 – 7
4S9–F5854–00	29 – 6
4S9–F5855–00	29 – 11
4S9–F5867–00	29 – 10
3D9–F586F–01	29 – 13
4S9–F5872–01	29 – 1
4S9–F5875–01	21 – 23
4S9–F5886–01	21 – 22
4S9–F5887–01	21 – 20
4KL–F5896–00	29 – 9
3D9–F589F–01	29 – 14

INDICE NUMERICO
NUMERICAL INDEX

CODIGO Nº PART NO.	REF. Nº
4KL–F589H–01	29 – 8
4S5–F5917–00	26 – 7
4S5–F5919–00	26 – 12
4S5–F5924–01	26 – 13
4S5–F5925–00	26 – 11
4S5–F5937–00	26 – 8
4S5–F5939–00	26 – 14
4S9–F6113–00	28 – 4
4S9–F6113–10	36 – 7
4S9–F6113–20	28 – 7
4S9–F6143–01–P0	28 – 5
4S9–F6143–01–P2	28 – 5
4S9–F6143–01–P3	28 – 5
4S9–F6145–00	28 – 8
4S9–F6210–01	28 – 1
4S9–F6240–00	28 – 11
4S9–F6241–00	28 – 12
40B–F6280–00	28 – 13
40B–F6290–00	28 – 14
4S9–F6311–01	28 – 15
4S9–F6331–00	28 – 18
4S9–F6393–01	28 – 16
4S9–F7111–01	30 – 1
4S9–F7112–00	30 – 2
4S9–F7115–00	30 – 4
4S9–F7211–00	30 – 6
4S9–F7231–00	30 – 9
4S9–F7235–00	30 – 8
4S9–F7311–00	30 – 15
4S9–F7411–00	30 – 19
4S9–F7413–00	30 – 21
4S9–F7424–00	30 – 38
4S9–F7430–01	30 – 22
4S9–F7431–01	30 – 24
4S9–F7433–00	30 – 25
4S9–F7440–01	30 – 30
4S9–F7441–01	30 – 32
4S9–F7444–00	30 – 33
4S9–F7445–01	30 – 26
	30 – 34
4S9–F7452–00–WN	30 – 23
4S9–F7462–00–WN	30 – 31
4S9–F8100–00	24 – 26
4S9–F8321–01	31 – 7
4S9–F8322–01	31 – 8
4S9–F8371–00	18 – 8
	31 – 23
4S9–F8391–30	31 – 2

CODIGO Nº PART NO.	REF. Nº
4S9–F8391–40	31 – 2
4S9–F8391–50	31 – 2
4S9–F8392–30	31 – 5
4S9–F8392–40	31 – 5
4S9–F8392–50	31 – 5
4S9–F8398–30	31 – 14
4S9–F8398–40	31 – 14
4S9–F8398–50	31 – 14
4S9–F8399–30	31 – 19
4S9–F8399–40	31 – 19
4S9–F8399–50	31 – 19
4S9–F842M–00	31 – 24
4S9–F842N–00	31 – 27
40B–H1410–00	32 – 2
4S9–H1450–00	32 – 1
4S9–H1800–20	33 – 1
4S9–H1801–10	33 – 2
4S9–H1828–00	33 – 6
4S9–H183G–10	33 – 5
4S9–H1847–00	33 – 3
4S9–H1940–00	40 – 8
4S9–H1960–00	40 – 6
40B–H2110–00	39 – 4
4S9–H2115–00	39 – 5
4S9–H2116–00	39 – 7
4S9–H2151–00	39 – 6
4S9–H2176–00	39 – 8
4S9–H2310–00	39 – 1
4S9–H2370–10	39 – 3
4S9–H2501–01	39 – 10
4S9–H2530–01	39 – 14
4S9–H2540–01	40 – 3
40B–H2590–01	39 – 15
3D9–H3311–10	34 – 2
	34 – 6
4S9–H3311–10	36 – 3
3D9–H3318–10	34 – 9
4S9–H3330–01	34 – 1
3D9–H3333–10	34 – 4
	34 – 8
3D9–H333A–00	34 – 7
4S9–H3340–01	34 – 5
3D9–H334A–00	34 – 3
4S9–H3350–00	40 – 9
4S9–H3371–01	40 – 10
4S9–H3509–00	35 – 6
4S9–H3510–01	35 – 1
4S9–H3511–00	35 – 2

CODIGO Nº PART NO.	REF. Nº
4S9–H3517–00	35 – 7
4S9–H3517–10	35 – 8
4S9–H3518–00	35 – 9
4S9–H353F–00	35 – 3
4S9–H3550–00	35 – 11
4S9–H3922–00	29 – 12
4S9–H3936–00	18 – 19
	28 – 19
4S9–H3941–00	38 – 2
4S9–H3973–01	38 – 1
40B–H3976–00	38 – 8
4S9–H397X–00	38 – 4
4S9–H3980–01	29 – 16
4S9–H4300–10	36 – 1
4S9–H4314–00	36 – 2
4S9–H4347–10	36 – 4
4S9–H4374–01	36 – 6
4S9–H4702–00	37 – 14
40B–H4710–00	37 – 1
4S9–H4712–00	37 – 5
4S9–H4714–00	37 – 2
40B–H4716–00	37 – 3
4S9–H4721–00	37 – 4
4S9–H4723–00	37 – 6
40B–H4740–00	37 – 16
40B–H4744–00	37 – 17
40B–H4763–00	37 – 8
4S9–H5110–10	22 – 6
	22 – 21
4P7–H5130–01	18 – 17
4S9–H5540–00	40 – 1
4S9–H5546–00	40 – 2
4S9–H5752–00	40 – 12
4S9–H5753–01	40 – 14
4S9–H5757–00	40 – 13
4S9–W0041–01	29 – 5
4S5–W0045–00	26 – 10
4S5–W0047–00	26 – 6
4S5–W0048–01	26 – 9
4S5–W0057–00	26 – 5
4S9–WE140–00	2 – 1
4S9–WF470–00	24 – 18
4S9–WF530–00	27 – 8
4S9–XF171–00–P0	19 – 16
4S9–XF171–10–P0	19 – 16
4S9–XF173–10–P0	19 – 3
4S9–XF173–10–P1	19 – 3
4S9–XF173–10–P3	19 – 3

CODIGO Nº PART NO.	REF. Nº
4S9–XF174–10–P0	19 – 9
4S9–XF174–10–P1	19 – 9
4S9–XF174–10–P3	19 – 9
40B–XF339–40–P0	21 – 13
40B–XF339–50–P1	21 – 13
4S9–XF831–10–P0	31 – 1
4S9–XF831–10–P1	31 – 1
4S9–XF831–10–P3	31 – 1
4S9–XF832–30–P0	31 – 4
4S9–XF832–30–P1	31 – 4
4S9–XF832–30–P3	31 – 4
4S9–XF838–10–P0	31 – 13
4S9–XF838–10–P1	31 – 13
4S9–XF838–10–P3	31 – 13
4S9–XF839–10–P0	31 – 18
4S9–XF839–10–P1	31 – 18
4S9–XF839–10–P3	31 – 18
4S9–XH254–01	39 – 11
90101–06818	27 – 14
90101–08820	4 – 8
90101–08847	27 – 23
90105–10036	21 – 18
90105–10824	26 – 3
90105–10867	20 – 16
90105–12802	20 – 15
90109–08816	27 – 37
90109–08830	30 – 16
90109–08848	27 – 41
90111–08853	26 – 2
90116–06820	1 – 4
90116–08824	9 – 14
90119–05802	40 – 15
90119–05805	36 – 5
90119–06869	18 – 10
90119–068A7	18 – 13
90149–06811	39 – 12
90155–06801	5 – 5
90159–03102	35 – 5
90159–05805	13 – 19
90159–06842	19 – 18
	21 – 15
	31 – 16
	31 – 21
	31 – 25
90159–06867	24 – 19
90167–04021	35 – 4
90170–05302	3 – 10
90170–06809	27 – 34

CODIGO Nº PART NO.	REF. Nº
90176–08812	1 – 11
90179–06835	30 – 12
90179–08639	27 – 24
90179–12803	13 – 11
90179–14803	13 – 25
90179–25809	21 – 8
90183–05807	18 – 6
	19 – 13
	21 – 28
	24 – 9
	28 – 6
	31 – 15
	31 – 20
90183–05818	37 – 12
90185–08818	30 – 17
90185–10807	25 – 9
90185–12804	27 – 28
90201–05812	37 – 22
90201–06078	8 – 5
90201–06557	31 – 11
90201–06816	23 – 5
90201–06843	37 – 10
90201–07808	39 – 13
90201–08043	17 – 3
90201–08824	4 – 7
90201–08827	1 – 10
90201–08870	8 – 10
90201–088C4	8 – 7
	28 – 3
90201–10669	8 – 15
90201–10831	20 – 17
	25 – 10
90201–108J9	29 – 3
90201–12030	32 – 6
90201–12045	16 – 18
90201–127F4	16 – 14
90201–12820	13 – 10
90201–12826	27 – 29
90201–128C9	14 – 7
90201–128D0	20 – 5
90201–128F3	20 – 6
90201–15700	14 – 17
90201–167P7	13 – 5
90201–178D3	16 – 11
90201–20266	14 – 4
	14 – 11
90202–26803	21 – 9
90206–14093	27 – 16

CODIGO Nº PART NO.	REF. Nº
90206–19027	11 – 5
90209–10131	38 – 3
90249–12008	30 – 11
90280–03017	2 – 7
90340–12806	5 – 6
90340–14818	10 – 7
90340–32813	10 – 9
90387–05816	37 – 20
90387–06063	10 – 15
90387–062M9	21 – 16
90387–06814	31 – 9
90387–06855	19 – 8
	19 – 15
90387–06857	18 – 3
	21 – 12
90387–068E9	31 – 26
90387–068K3	6 – 17
90387–068K6	24 – 13
90387–10817	8 – 9
	30 – 39
90387–10828	25 – 7
90387–127Y0	27 – 19
90387–12841	27 – 31
90387–12844	27 – 2
90387–15812	14 – 16
90387–16812	13 – 1
90387–17805	13 – 23
90401–10823	29 – 2
90430–06817	4 – 15
90430–12227	5 – 7
90450–43802	6 – 16
90462–10801	9 – 12
90464–45800	28 – 20
90465–10833	9 – 11
90467–07029	7 – 31
90467–09006	23 – 10
90467–10803	23 – 9
90467–110A3	6 – 15
90467–11801	23 – 11
90467–13064	9 – 5
90467–13800	6 – 19
90468–26800	11 – 3
90480–01559	18 – 11
90480–11008	37 – 21
90480–12808	19 – 7
	19 – 14
90480–13005	37 – 9
90480–13018	31 – 10

INDICE NUMERICO
NUMERICAL INDEX

CODIGO Nº PART NO.	REF. Nº
90480–13568	10 – 14
90480–14806	24 – 12
90480–18895	37 – 13
90501–02639	12 – 8
90501–04802	13 – 9
90501–05802	13 – 22
90501–06805	15 – 6
90501–10245	30 – 10
90501–12805	16 – 17
90501–20804	13 – 18
90506–12801	27 – 9
90506–15802	27 – 10
90506–20810	30 – 7
90506–20829	30 – 18
90506–35815	30 – 5
90508–26810	11 – 8
90508–29007	16 – 7
90520–02801	17 – 12
90520–02802	17 – 13
90520–05804	18 – 20
90560–10292	25 – 2
90560–17384	13 – 12
91312–06012	4 – 5
	12 – 9
91312–06014	32 – 4
91312–06016	4 – 12
91312–06018	4 – 16
91312–06025	6 – 4
	6 – 5
	29 – 15
	32 – 3
91402–20012	27 – 40
	30 – 13
91402–25015	30 – 28
	30 – 36
91402–30030	30 – 3
91702–08042	30 – 27
	30 – 35
92902–05200	18 – 16
92902–06200	38 – 6
92902–08200	27 – 38
92902–10200	8 – 13
92907–06600	30 – 14
92B12–06025	15 – 3
93101–10800	10 – 24
93102–12806	16 – 6
93102–15807	11 – 13
93102–20802	14 – 21

CODIGO Nº PART NO.	REF. Nº
93106–20826	25 – 3
93106–26823	27 – 18
93210–06806	16 – 22
93210–108B1	4 – 2
93210–14899	10 – 8
93210–19809	10 – 23
93210–22806	40 – 4
93210–23614	33 – 4
93210–25809	6 – 3
93210–328A4	10 – 10
93210–41041	27 – 5
93210–44807	1 – 9
93210–62802	1 – 6
93306–001X8	14 – 9
93306–002X9	4 – 3
93306–054Y0	27 – 20
93306–203XE	14 – 8
93306–204XF	14 – 20
93306–205YP	2 – 6
93306–252XJ	14 – 19
93306–300Y4	25 – 4
93306–301XG	27 – 3
93306–301XH	27 – 4
93310–526Y6	2 – 3
93340–212Y6	16 – 15
93342–210Y0	13 – 28
93410–20809	14 – 5
	14 – 12
	14 – 23
93430–05826	5 – 3
93440–10153	1 – 3
93450–14088	2 – 10
93604–10837	16 – 16
93604–12831	15 – 4
93606–10801	13 – 8
93608–43800	12 – 2
93608–50149	16 – 8
93610–10174	12 – 7
93822–15817	14 – 22
94107–17842	25 – 5
94108–17841	27 – 25
94207–17808	25 – 6
	27 – 26
94568–B7098	27 – 35
94568–F2086	4 – 9
94700–00869	1 – 12
95022–06010	21 – 21
	21 – 24

CODIGO Nº PART NO.	REF. Nº
95022–06014	40 – 7
95022–06016	21 – 11
95022–06025	21 – 26
	24 – 14
95022–06040	9 – 10
	10 – 4
	10 – 20
95022–06050	10 – 5
	10 – 21
95022–06060	9 – 9
95022–06080	9 – 8
	10 – 6
95022–06090	1 – 15
95302–06600	27 – 15
95302–08700	27 – 39
95307–06600	27 – 33
95602–05100	37 – 19
95602–08200	17 – 4
95602–10200	21 – 19
95602–12200	20 – 7
95702–05500	18 – 18
95702–06500	8 – 17
	16 – 23
	24 – 6
95702–08500	8 – 11
95702–10500	8 – 14
95702–12500	32 – 5
95802–06010	17 – 9
	40 – 11
95802–06012	37 – 15
95802–06014	23 – 13
95802–06020	6 – 18
95802–06025	10 – 13
95802–08045	8 – 6
95812–06020	24 – 24
95812–08020	30 – 29
	30 – 37
95812–08120	17 – 2
95822–06016	23 – 4
95822–08016	30 – 20
	30 – 41
95822–10045	8 – 12
97002–05012	18 – 15
97002–06016	39 – 2
97002–06020	31 – 12
97002–08016	28 – 2
97012–06025	11 – 12
97022–08020	16 – 26

CODIGO Nº PART NO.	REF. Nº
97502–06510	20 – 11
97522–06520	18 – 4
97527–06510	39 – 9
97607–04112	7 – 10
97607–04114	7 – 22
97702–40120	37 – 7
97702–50012	21 – 14
	28 – 10
	31 – 17
	31 – 22
97702–50014	18 – 7
	19 – 2
	37 – 11
97702–50016	24 – 11
	28 – 9
	31 – 28
	35 – 10
97702–50025	19 – 6
	19 – 12
97702–50030	6 – 13
98502–05010	40 – 5
98502–05012	28 – 17
98502–06012	24 – 16
98502–06016	1 – 7
98507–05020	37 – 18
98507–05025	38 – 7
98507–06008	38 – 5
9850M–05025	38 – 9
98980–06012	8 – 3
99009–10400	15 – 11
99009–15400	14 – 18
99009–17400	16 – 12
99009–19400	11 – 7
99246–00100	19 – 5
	19 – 11
99530–10114	1 – 14
	9 – 7
	9 – 13
	10 – 3
	10 – 19

CODIGO Nº PART NO.	REF. Nº

CODIGO Nº PART NO.	REF. Nº