YAMAHA 2009

SERVICE MANUAL

YZFR1Y(C)

LIT-11616-22-78 14B-28197-10

EAS20050

YZFR1Y(C)
SERVICE MANUAL

First edition, December 2008

Printed in U.S.A.
P/N LIT-11616-22-78

EAS20071

IMPORTANT

This manual was produced by the Yamaha Motor Company, Ltd. primarily for use by Yamaha dealers and their qualified mechanics. It is not possible to include all the knowledge of a mechanic in one manual. Therefore, anyone who uses this book to perform maintenance and repairs on Yamaha vehicles should have a basic understanding of mechanics and the techniques to repair these types of vehicles. Repair and maintenance work attempted by anyone without this knowledge is likely to render the vehicle unsafe and unfit for use.

This model has been designed and manufactured to perform within certain specifications in regard to performance and emissions. Proper service with the correct tools is necessary to ensure that the vehicle will operate as designed. If there is any question about a service procedure, it is imperative that you contact a Yamaha dealer for any service information changes that apply to this model. This policy is intended to provide the customer with the most satisfaction from his vehicle and to conform to federal environmental quality objectives.

Yamaha Motor Company, Ltd. is continually striving to improve all of its models. Modifications and significant changes in specifications or procedures will be forwarded to all authorized Yamaha dealers and will appear in future editions of this manual where applicable.

TIP

- This Service Manual contains information regarding periodic maintenance to the emission control system. Please read this material carefully.
- Designs and specifications are subject to change without notice.

EAS20081

IMPORTANT MANUAL INFORMATION

Particularly important information is distinguished in this manual by the following notations.

⚠	**This is the safety alert symbol. It is used to alert you to potential personal injury hazards. Obey all safety messages that follow this symbol to avoid possible injury or death.**
⚠ WARNING	**A WARNING indicates a hazardous situation which, if not avoided, could result in death or serious injury.**
NOTICE	**A NOTICE indicates special precautions that must be taken to avoid damage to the vehicle or other property.**
TIP	A TIP provides key information to make procedures easier or clearer.

EAS20090

HOW TO USE THIS MANUAL

This manual is intended as a handy, easy-to-read reference book for the mechanic. Comprehensive explanations of all installation, removal, disassembly, assembly, repair and check procedures are laid out with the individual steps in sequential order.

- The manual is divided into chapters and each chapter is divided into sections. The current section title “1” is shown at the top of each page.
- Sub-section titles “2” appear in smaller print than the section title.
- To help identify parts and clarify procedure steps, there are exploded diagrams “3” at the start of each removal and disassembly section.
- Numbers “4” are given in the order of the jobs in the exploded diagram. A number indicates a disassembly step.
- Symbols “5” indicate parts to be lubricated or replaced.
  Refer to “SYMBOLS”.
- A job instruction chart “6” accompanies the exploded diagram, providing the order of jobs, names of parts, notes in jobs, etc.
- Jobs “7” requiring more information (such as special tools and technical data) are described sequentially.

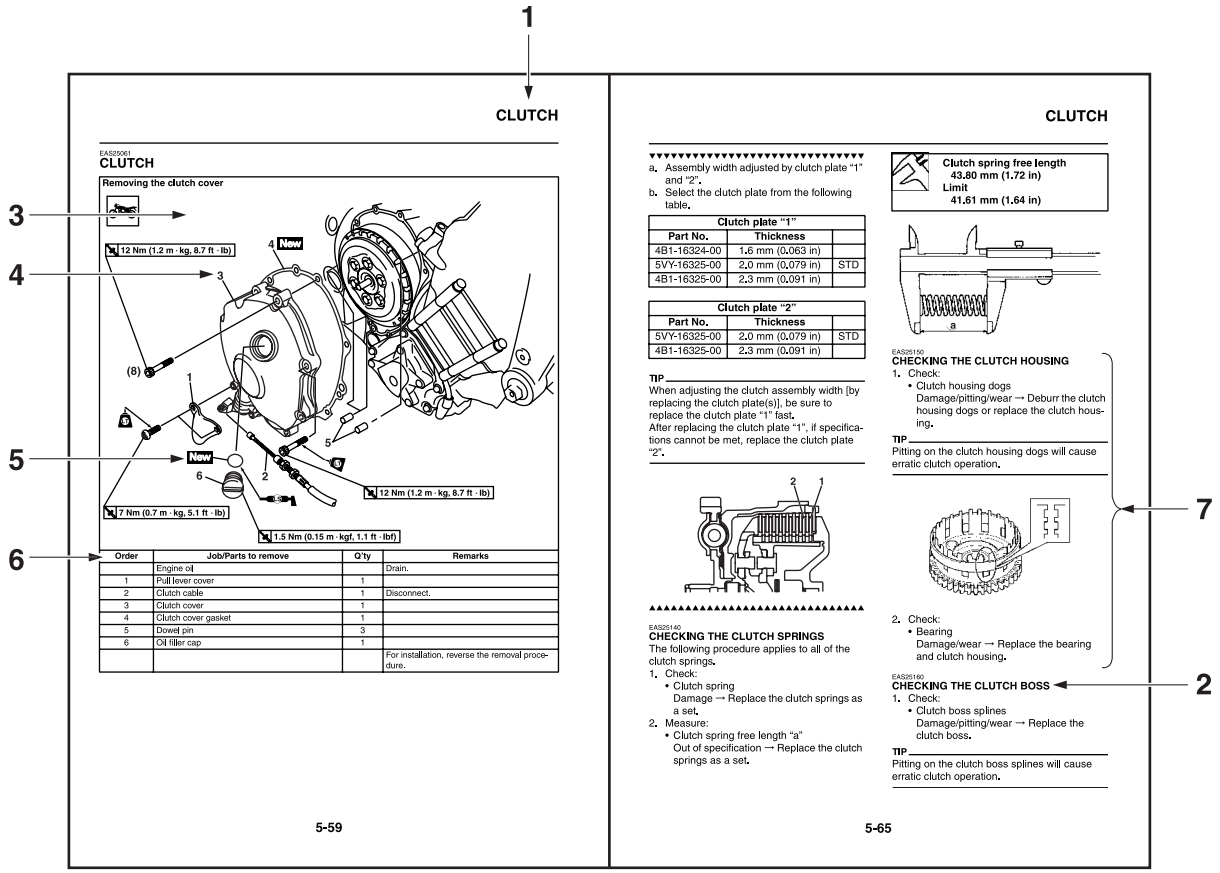

EAS20100

SYMBOLS

The following symbols are used in this manual for easier understanding.

TIP

The following symbols are not relevant to every vehicle.

SYMBOL	DEFINITION	SYMBOL	DEFINITION
	Serviceable with engine mounted	G	Gear oil
	Filling fluid	M	Molybdenum disulfide oil
	Lubricant	BF	Brake fluid
	Special tool	B	Wheel bearing grease
	Tightening torque	LS	Lithium-soap-based grease
	Wear limit, clearance	M	Molybdenum disulfide grease
	Engine speed	S	Silicone grease
	Electrical data	LT	Apply locking agent (LOC-TITE®).
E	Engine oil	New	Replace the part with a new one.

EAS20110

TABLE OF CONTENTS

GENERAL INFORMATION

EAS20130
IDENTIFICATION

EAS20140
VEHICLE IDENTIFICATION NUMBER
The vehicle identification number “1” is stamped into the right side of the steering head pipe.

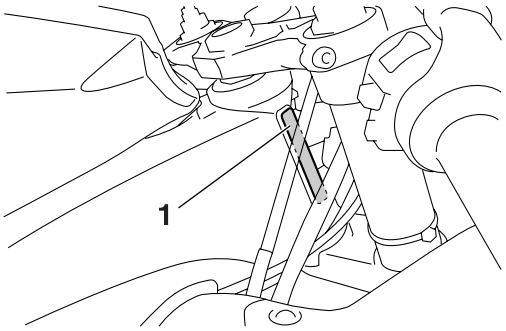

EAS20150
MODEL LABEL
The model label “1” is affixed to the seat rail reinforcement under the passenger seat. This information will be needed to order spare parts.

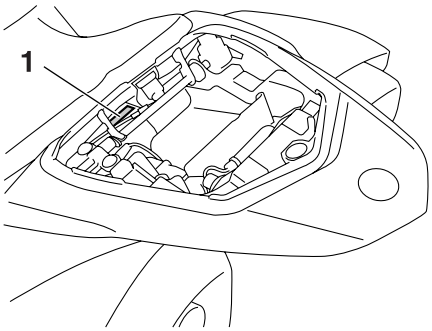

EAS20170
FEATURES

EAS30340
OUTLINE OF THE FI SYSTEM

The main function of a fuel supply system is to provide fuel to the combustion chamber at the optimum air-fuel ratio in accordance with the engine operating conditions and the atmospheric temperature. In the conventional carburetor system, the air-fuel ratio of the mixture that is supplied to the combustion chamber is created by the volume of the intake air and the fuel that is metered by the jet used in the respective carburetor.

Despite the same volume of intake air, the fuel volume requirement varies by the engine operating conditions, such as acceleration, deceleration, or operating under a heavy load. Carburetors that meter the fuel through the use of jets have been provided with various auxiliary devices, so that an optimum air-fuel ratio can be achieved to accommodate the constant changes in the operating conditions of the engine.

As the requirements for the engine to deliver more performance and cleaner exhaust gases increase, it becomes necessary to control the air-fuel ratio in a more precise and finely tuned manner. To accommodate this need, this model has adopted an electronically controlled fuel injection (FI) system, in place of the conventional carburetor system. This system can achieve an optimum air-fuel ratio required by the engine at all times by using a microprocessor that regulates the fuel injection volume according to the engine operating conditions detected by various sensors.

The adoption of the FI system has resulted in a highly precise fuel supply, improved engine response, better fuel economy, and reduced exhaust emissions.

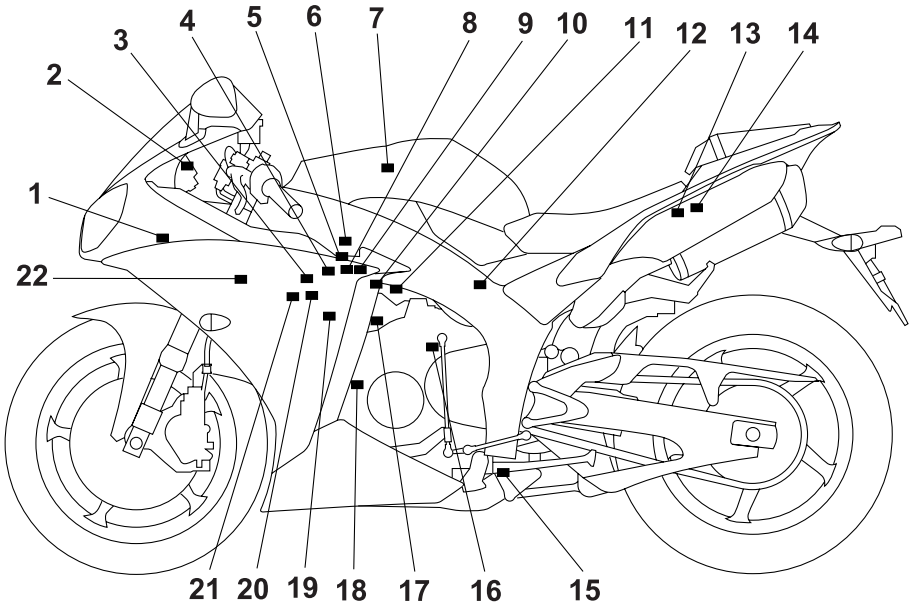

1. Intake air temperature sensor
2. Engine trouble warning light
3. Air induction system solenoid
4. Atmospheric pressure sensor
5. Intake air pressure sensor
6. Intake funnel servo motor
7. Secondary injectors
8. Throttle servo motor
9. Throttle position sensor
10. Accelerator position sensor
11. Primary injectors
12. Fuel pump
13. Lean angle sensor
14. Relay unit (fuel pump relay)
15. O_2 sensor
16. Speed sensor
17. Coolant temperature sensor
18. Crankshaft position sensor
19. Spark plugs
20. Ignition coils
21. Cylinder identification sensor
22. ECU (engine control unit)

EAS14B1017

FI SYSTEM

The fuel pump delivers fuel to the fuel injector via the fuel filter. The pressure regulator maintains the fuel pressure that is applied to the fuel injector at only 324 kPa (3.24 kgf/cm², 47.0 psi). Accordingly, when the energizing signal from the ECU energizes the fuel injector, the fuel passage opens, causing the fuel to be injected into the intake manifold only during the time the passage remains open. Therefore, the longer the length of time the fuel injector is energized (injection duration), the greater the volume of fuel that is supplied. Conversely, the shorter the length of time the fuel injector is energized (injection duration), the lesser the volume of fuel that is supplied.

The injection duration and the injection timing are controlled by the ECU. Signals that are input from the throttle position sensor, accelerator position sensor, coolant temperature sensor, atmospheric pressure sensor, cylinder identification sensor, lean angle sensor, crankshaft position sensor, intake air pressure sensor, air temperature sensor, speed sensor and O_2 sensor enable the ECU to determine the injection duration. The injection timing is determined through the signals from the crankshaft position sensor. As a result, the volume of fuel that is required by the engine can be supplied at all times in accordance with the driving conditions.

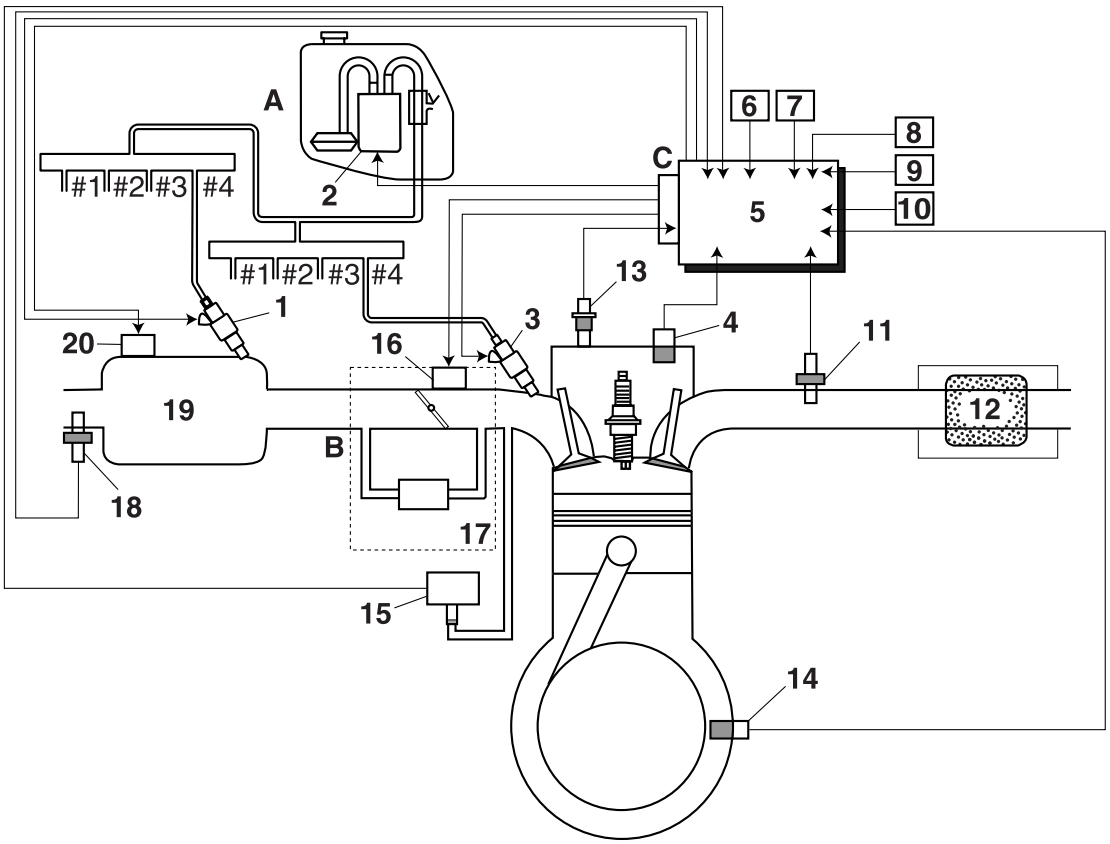

1. Secondary injector
2. Fuel pump
3. Primary injector
4. Cylinder identification sensor
5. ECU (engine control unit)
6. Throttle position sensor
7. Accelerator position sensor
8. Speed sensor
9. Intake air temperature sensor
10. Lean angle sensor
11. O_2 sensor
12. Catalytic converter
13. Coolant temperature sensor
14. Crankshaft position sensor
15. Intake air pressure sensor
16. Throttle servo motor
17. Throttle body
18. Atmospheric pressure sensor
19. Air filter case
20. Intake funnel servo motor

A. Fuel system
B. Air system
C. Control system

EAS14B1076

YCC-T (Yamaha Chip Controlled Throttle) YCC-I (Yamaha Chip Controlled Intake)

Mechanism characteristics

Yamaha developed the YCC-T and YCC-I system employing the most advanced electronic control technologies. Electronic control throttle systems have been used on automobiles, but Yamaha has developed a faster, more compact system specifically for the needs of a sports motorcycle. The Yamaha-developed system has a high-speed calculating capacity that produces computations of running conditions every 1/1000th of a second.

The YCC-T system is designed to respond to the throttle action of the rider by having the ECU instantaneously calculate the ideal throttle valve opening and generate signals to operate the motor-driven throttle valves and thus actively control the intake air volume.

The ECU contains three CPUs with a capacity about five times that of conventional units, making it possible for the system to respond extremely quickly to the slightest adjustments made by the rider. In particular, optimized control of the throttle valve opening provides the optimum volume of intake air for easy-to-use torque, even in a high-revving engine.

The YCC-I system calculates the value from the engine revolution number and throttle opening rate, activates the intake air funnel with the electronic control motor drive to control the intake pipe length in order to gain the high power output in all revolution ranges from low speeds to high speeds.

Aims and advantages of using YCC-T system

- Increased engine power
  By shortening the air intake path, higher engine speed is possible → Increased engine power.
- Improved driveability
  Air intake volume is controlled according to the operating conditions → Improved throttle response to meet engine requirement.
  Driving force is controlled at the optimal level according to the transmission gear position and engine speed → Improved throttle control.
- Engine braking control
  Due to the throttle control, optimal engine braking is made possible.
- Simplified idle speed control (ISC) mechanism
  The bypass mechanism and ISC actuator are eliminated → A simple mechanism is used to maintain a steady idle speed.
- Reduced weight
  Compared to using a sub-throttle mechanism, weight is reduced.

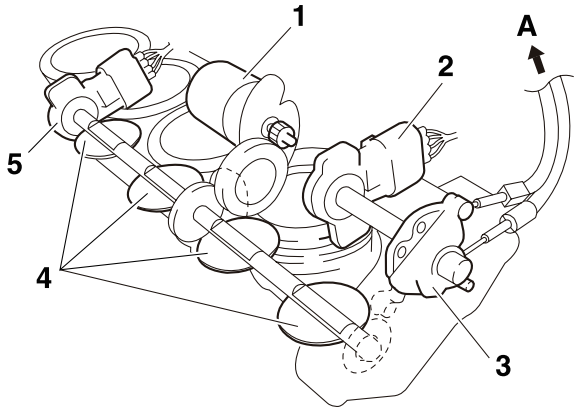

1. Throttle servo motor
2. Accelerator position sensor
3. Throttle cable pulley with linkage guard
4. Throttle valves
5. Throttle position sensor

A. To throttle grip

Aims and advantages of using YCC-I system

- Improvement of the engine power characteristics
  The high power design in all ranges is now provided by having both two features of the short intake function to ensure the power at the high speed revolution of engine, and the long intake function to ensure the power in the practical use range.
- Intake pipe length switching control using the motor
  The intake pipe length switching operation in a minute time is now available by means of the motor drive using the electronic control. The smooth power characteristic is provided, which does not let an operator feel the switching action by the optimization of its switching revolution number and the most suitable application of engine at the time of changing the revolution.

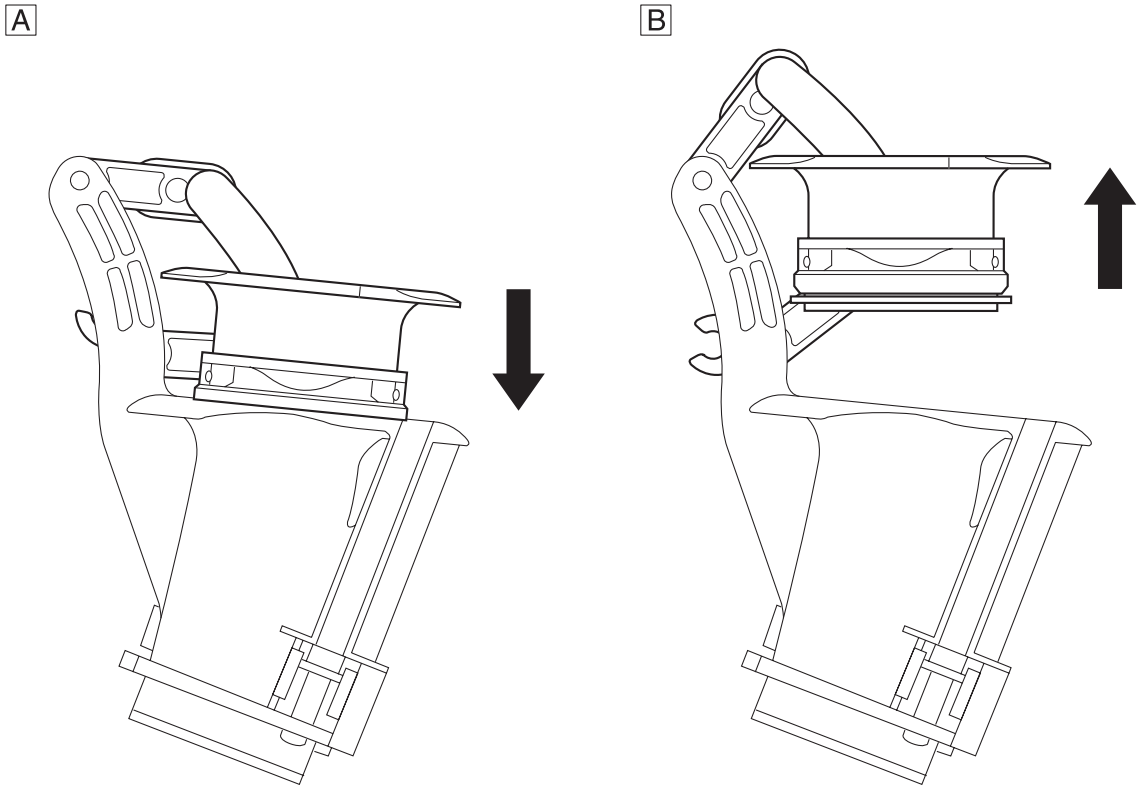

A. Down position (long intake)
   (Low rpm to Mid rpm)
B. Up position (short intake)
   (High rpm)

YCC-T/YCC-I system outline

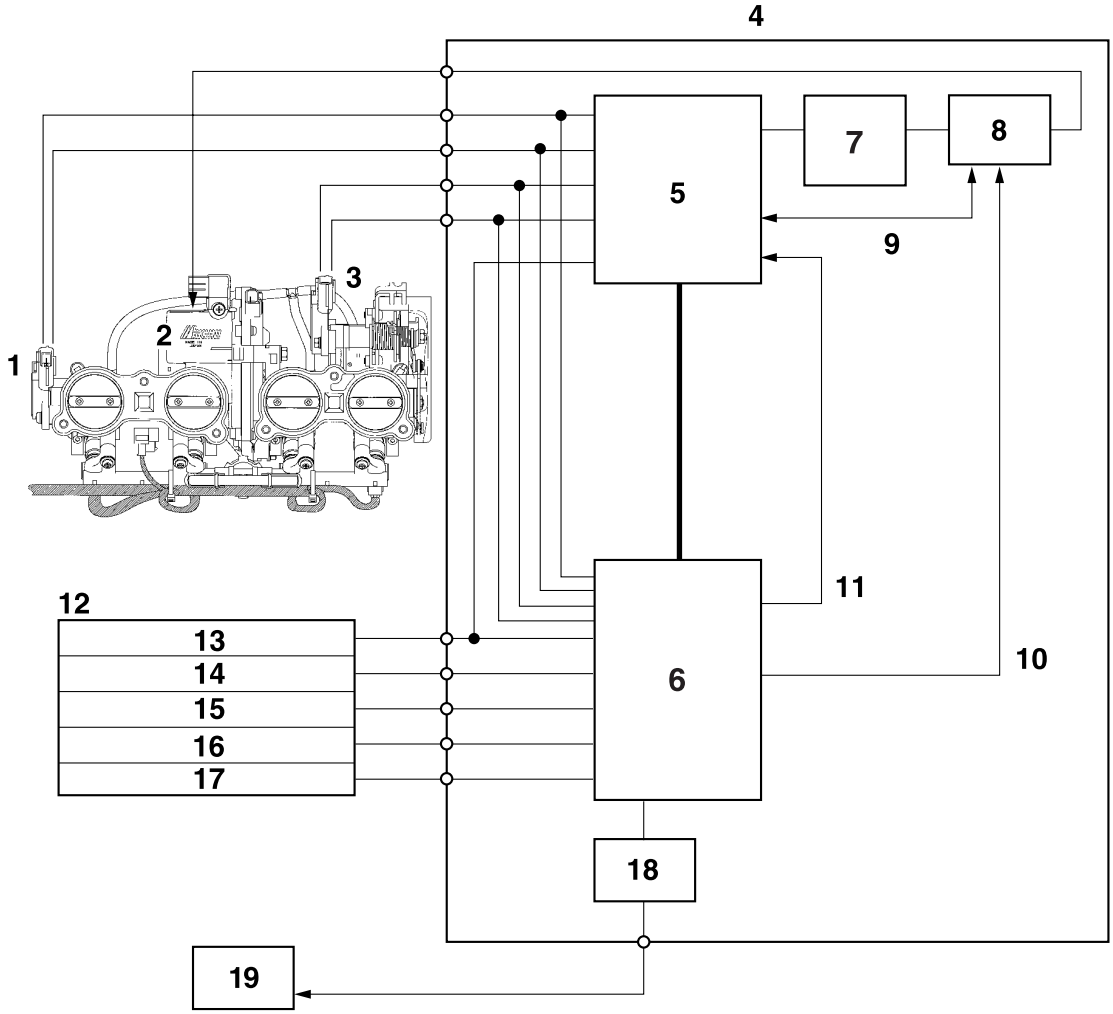

1. Throttle position sensor
2. Throttle servo motor
3. Accelerator position sensor
4. ECU (engine control unit)
5. ETV main CPU (32 bit)
6. FI CPU (32 bit)
7. Throttle servo motor driver
8. Throttle servo motor driver operation sensing/shut off circuit
9. Throttle servo motor driver operation sensing feedback/emergency stop
10. Emergency stop
11. Engine revolution (pulse signal)
12. Sensor input
13. Neutral switch
14. Crankshaft position sensor
15. Speed sensor
16. Coolant temperature sensor
17. Atmospheric pressure sensor
18. Intake funnel servo motor driver
19. Intake funnel servo motor

YCC-T/YCC-I control outline

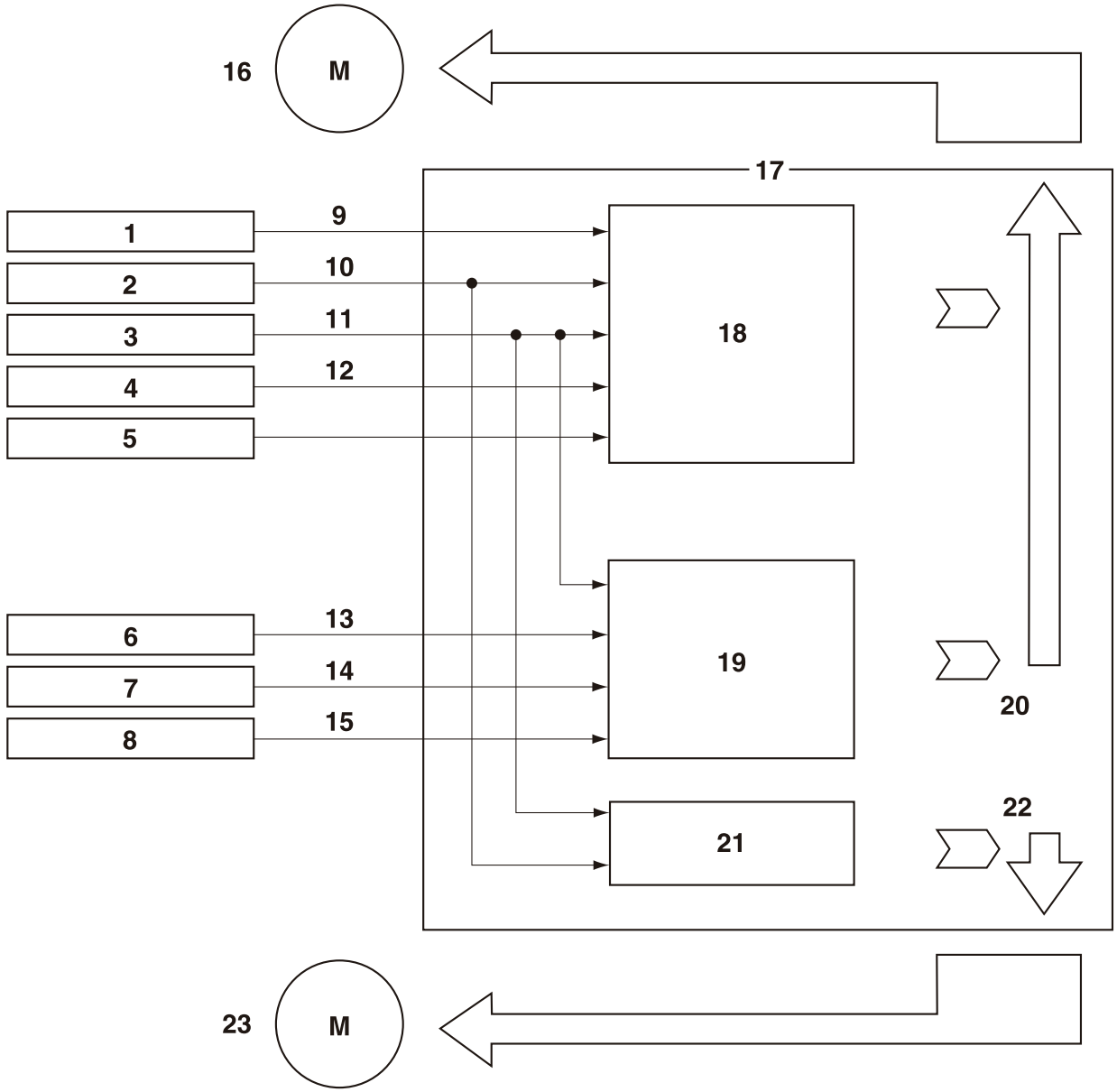

1. Accelerator position sensor
2. Throttle position sensor
3. Crankshaft position sensor
4. Speed sensor
5. D-mode switch
6. Coolant temperature sensor
7. Neutral switch
8. Atmospheric pressure sensor
9. Accelerator position (two signals)
10. Throttle position (two signals)
11. Engine revolution
12. Vehicle speed
13. Coolant temperature
14. Neutral/In gear
15. Atmospheric pressure
16. Throttle servo motor
17. ECU (engine control unit)
18. Base map
19. Idle speed control
20. Calculated throttle valve opening angle
21. Base map
22. Air funnel position (Calculation value)
23. Intake funnel servo motor

EAS14B4002
INSTRUMENT FUNCTIONS

Multi-function meter unit

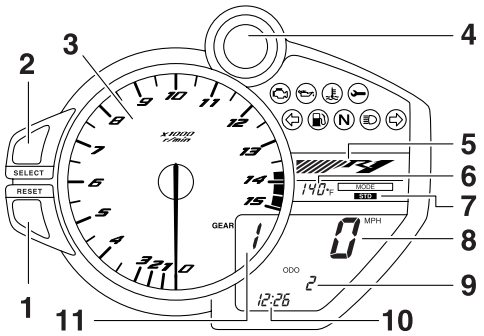

1. “RESET” button
2. “SELECT” button
3. Tachometer
4. Shift timing indicator light
5. Throttle opening position display
6. Coolant temperature display/air intake temperature display
7. Drive mode display
8. Speedometer
9. Odometer/tripmeter/fuel reserve tripmeter/instantaneous fuel consumption/average fuel consumption
10. Clock/stopwatch
11. Transmission gear display

EWA14B1014
WARNING

Be sure to stop the vehicle before making any setting changes to the multi-function meter unit. Changing settings while riding can distract the operator and increase the risk of an accident.

The multi-function meter unit is equipped with the following:
- A speedometer
- A tachometer
- An odometer
- Two tripmeters (which show the distance traveled since they were last set to zero)
- A fuel reserve tripmeter (which shows the distance traveled since the fuel level warning light came on)
- A stopwatch
- A clock
- A coolant temperature display
- An air intake temperature display
- A transmission gear display
- A drive mode display (which shows the selected drive mode)
- A throttle opening position display
- A fuel consumption display (instantaneous and average consumption functions)
- A self-diagnosis device
- A display brightness, shift timing indicator light and throttle opening position display control mode

TIP
- Be sure to turn the key to “ON” before using the “SELECT” and “RESET” buttons.
- To switch the speedometer and odometer/tripmeter/fuel consumption displays between kilometers and miles, press the “SELECT” button for at least one second.

Tachometer

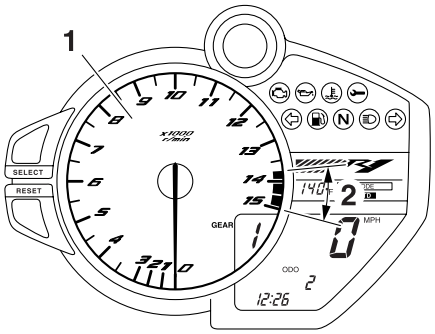

1. Tachometer
2. Tachometer red zone

The electric tachometer allows the rider to monitor the engine speed and keep it within the ideal power range.
When the key is turned to “ON”, the tachometer needle sweeps once across the r/min range and then returns to zero r/min in order to test the electrical circuit.

ECA14B1015
NOTICE

Do not operate the engine in the tachometer red zone.
Red zone: 13750 r/min and above

Clock and stopwatch modes

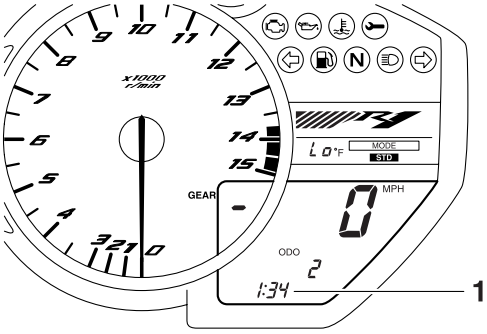

1. Clock/stopwatch

To set the clock

1. Push the “SELECT” button and “RESET” button together for at least two seconds.
2. When the hour digits start flashing, push the “RESET” button to set the hours.
3. Push the “SELECT” button, and the minute digits start flashing.
4. Push the “RESET” button to set the minutes.
5. Push the “SELECT” button and then release it to start the clock.

To display the stopwatch

To change the display to the stopwatch mode, push the “SELECT” button and “RESET” button together. To change the display back to the clock mode at any time, except when the stopwatch is counting, push the “SELECT” button and “RESET” button together.

Standard measurement

1. Push the “RESET” button to start the stopwatch.
2. Push the “SELECT” button to stop the stopwatch.
3. Push the “SELECT” button again to reset the stopwatch.

Split-time measurement

1. Push the “RESET” button to start the stopwatch.
2. Push the “RESET” button or start switch “” to measure split-times. Split-times are displayed on the odometer display for five seconds.
3. Push the “RESET” button or start switch “” to display the final split-time or push the “SELECT” button to stop the stopwatch and display the total elapsed time.

Split-time history

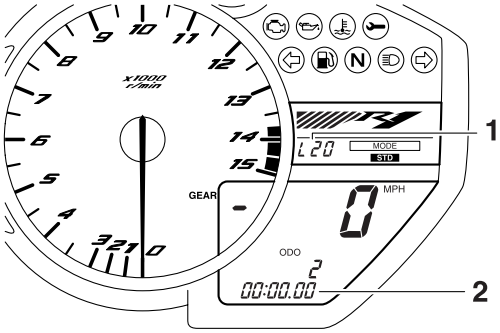

1. Coolant temperature display/air intake temperature display
2. Stopwatch

The split-time history displays up to 20 stored split times. The split-time history can be displayed either in reverse chronological order or by speed.

1. Push the “SELECT” button for at least one second to select the reverse chronological order mode; “L20” displays on the stopwatch.
   Push the “SELECT” button again to select the speed mode; “F20” displays on the stopwatch.
2. Push the “RESET” button. Depending on the selected split time, “L20” or “F20” displays on the coolant temperature display/air temperature display, and its corresponding stored split time displays on the stopwatch.
3. Push the “SELECT” button to move down, and the “RESET” button to move up through the list.

TIP

- When displaying in the reverse chronological order, the split times are shown from the latest to earliest (i.e., L20, L19, L18, L17). When displaying in the speed order, the split times are shown from the fastest to slowest (i.e., F01, F02, F03, F04).
- Push the “RESET” button for at least one second to reset all the recorded times for the selected split-time history.

4. Push the “SELECT” button for at least one second to cancel the split-time history and return to the time measurement.

Odometer, tripmeter, instantaneous fuel consumption and average fuel consumption modes

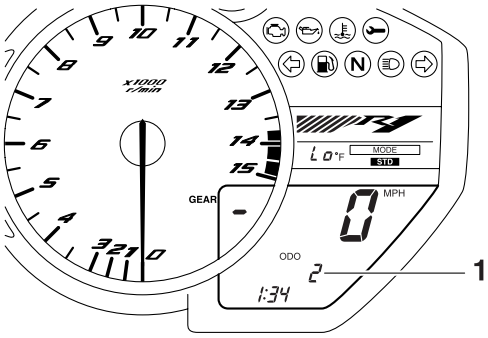

1. Odometer/tripmeter/fuel reserve tripmeter/ instantaneous fuel consumption/average fuel consumption

Push the “SELECT” button to switch the display between the odometer mode “ODO”, the tripmeter modes “TRIP 1” and “TRIP 2”, the instantaneous fuel consumption mode “km/L”, “L/100 km” or “MPG”, and the average fuel consumption mode “AV_ _._ km/L”, “AV_ _._ L/100 km” or “AV_ _._ MPG” in the following order:

ODO → TRIP 1 → TRIP 2 → km/L, L/100 km or MPG → AV_ _._ km/L, AV_ _._ L/100 km or AV_ _._ MPG → ODO

If the fuel level warning light comes on, the display automatically changes to the fuel reserve tripmeter mode “TRIP F” and starts counting the distance traveled from that point. In that case, push the “SELECT” button to switch the display between the various tripmeter, odometer, instantaneous fuel consumption and average fuel consumption modes in the following order:

TRIP F → km/L, L/100 km or MPG → AV_ _._ km/L, AV_ _._ L/100 km or AV_ _._ MPG → ODO → TRIP 1 → TRIP 2 → TRIP F

To reset a tripmeter, select it by pushing the “SELECT” button, and then push the “RESET” button for at least one second.
If you do not reset the fuel reserve tripmeter manually, it resets itself automatically and the display returns to the prior mode after refueling and traveling 5 km (3 mi).

Instantaneous fuel consumption mode

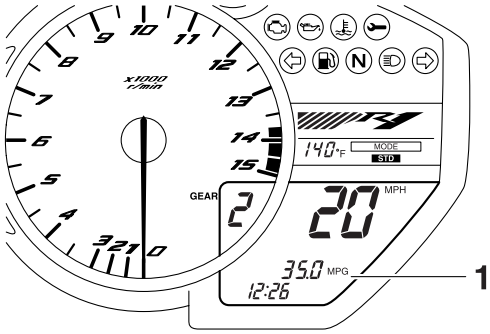

1. Instantaneous fuel consumption

The instantaneous fuel consumption display can be set to either “km/L”, “L/100 km” or “MPG”.

- When the display is set to “km/L”, the distance that can be traveled on 1.0 L of fuel under the current riding conditions is shown.
- When the display is set to “L/100 km”, the amount of fuel necessary to travel 100 km under the current riding conditions is shown.
- When the display is set to “MPG”, the distance that can be traveled on 1.0 Imp.gal of fuel under the current riding conditions is shown.

To switch between the instantaneous fuel consumption displays, push the “SELECT” button for one second when one of the displays is shown.

TIP

If traveling at speeds under 10 km/h (6.0 mi/h), “_ _._” is displayed.

Average fuel consumption mode

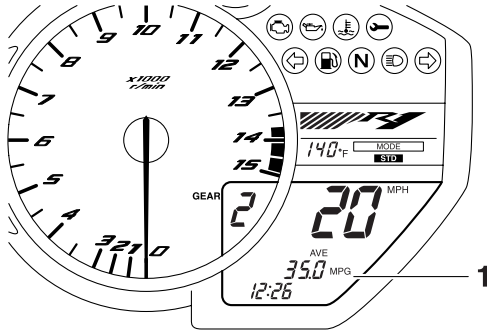

1. Average fuel consumption

The average fuel consumption display can be set to either “AV_ _._ km/L”, “AV_ _._ L/100 km” or “AV_ _._ MPG”.

This display shows the average fuel consumption since it was last reset.

- When the display is set to “AV_ _._ km/L”, the average distance that can be traveled on 1.0 L of fuel is shown.
- When the display is set to “AV_ _._ L/100 km”, the average amount of fuel necessary to travel 100 km is shown.
- When the display is set to “AV_ _._ MPG”, the average distance that can be traveled on 1.0 Imp.gal of fuel is shown.

To switch between the average fuel consumption displays, push the “SELECT” button for one second when one of the displays is shown.
To reset the average fuel consumption display, select it by pushing the “SELECT” button, and then push the “RESET” button for at least one second.

TIP

After resetting an average fuel consumption display, “_ _._” is shown for that display until the vehicle has traveled 1 km (0.6 mi).

Transmission gear display

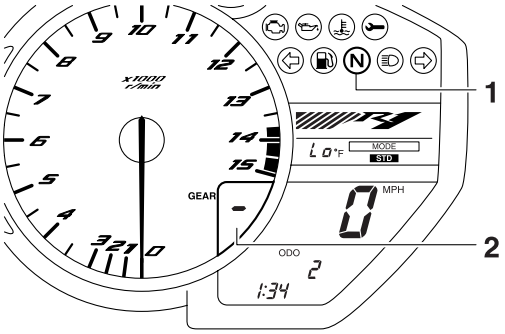

1. Neutral indicator light “N”
2. Transmission gear display

This display shows the selected gear.
The neutral position is indicated by “–” and by the neutral indicator light.

Throttle opening position display

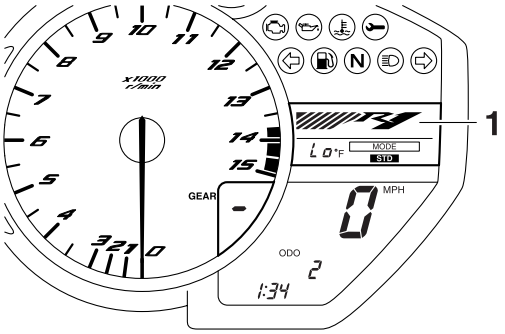

1. Throttle opening position display

The throttle opening position display shows how much the throttle is being opened. The number of segments increases as the throttle is being opened.
Refer to “Display brightness and shift timing indicator light control mode”.

TIP

The segments are displayed when the engine is running.

Drive mode display

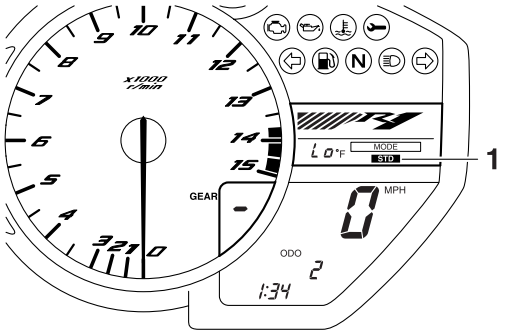

1. Drive mode display

This display indicates which drive mode has been selected: “STD”, “A” or “B”.
For more details on the modes and on how to select them, refer to “D-mode (drive mode)”.

Coolant temperature display

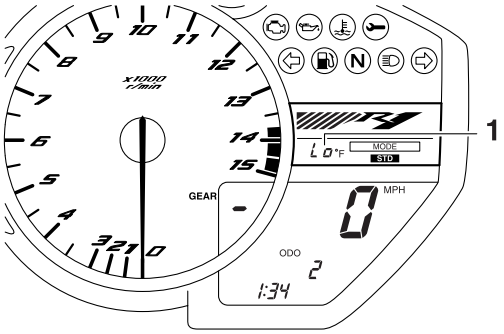

1. Coolant temperature display

The coolant temperature display indicates the temperature of the coolant.

TIP

When the coolant temperature display is selected, “C” is displayed for one second, and then the coolant temperature is displayed.

ECA14B1016

NOTICE

Do not continue to operate the engine if it is overheating.

Air intake temperature display

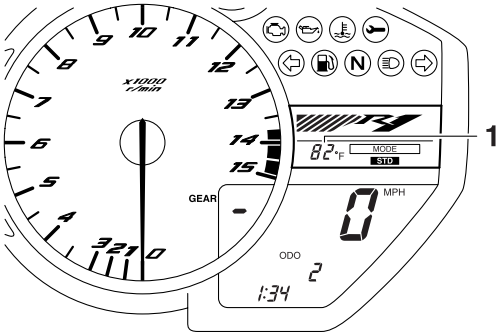

1. Air intake temperature display

The air intake temperature display indicates the temperature of the air drawn into the air filter case. Turn the key to “ON”, and push the “RESET” button to switch the coolant temperature display to the air intake temperature display. Push the “RESET” button again to return to the coolant temperature display.

TIP

- Even if the air intake temperature is set to be displayed, the coolant temperature warning light comes on if the engine overheats.
- When the key is turned to “ON”, the coolant temperature is automatically displayed, even if the air intake temperature was displayed prior to turning the key to “OFF”.
- When the air intake temperature display is selected, “A” is displayed before the temperature.

Self-diagnosis device

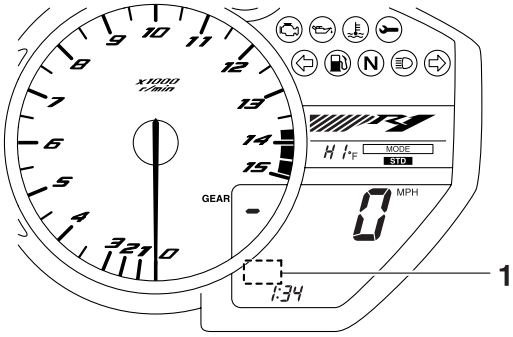

1. Error code display

This model is equipped with a self-diagnosis device for various electrical circuits.
If a problem is detected in any of those circuits, the engine trouble warning light comes on and the display indicates an error code.
If the display indicates any error codes, note the code number, and then have a Yamaha dealer check the vehicle.

ECA14B1017

NOTICE

If the display indicates an error code, the vehicle should be checked as soon as possible in order to avoid engine damage.

Display brightness, shift timing indicator light and throttle opening position display control mode

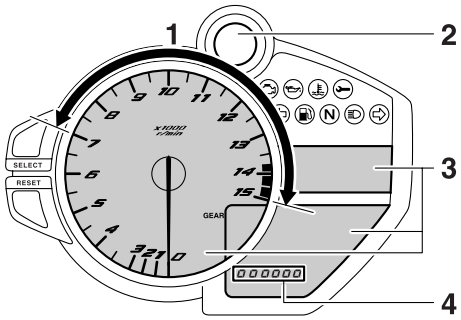

1. Shift timing indicator light activation range
2. Shift timing indicator light
3. Brightness adjustable displays
4. Brightness level

This mode allows you to make changes to six settings by performing the following steps.
1. Turn the key to “OFF”.
2. Push and hold the “SELECT” button.
3. Turn the key to “ON”, and then release the “SELECT” button after five seconds. The display brightness function is selected.
4. Push the “SELECT” button to switch the functions in the order below.
   a. Display brightness:
      This function allows you to adjust the brightness of the displays and tachometer to suit the outside lighting conditions.
   b. Shift timing indicator light activity:
      This function allows you to choose whether or not the indicator light should be activated and whether it should flash or stay on when activated.
   c. Shift timing indicator light activation:
      This function allows you to select the engine speed at which the indicator light is activated.
   d. Shift timing indicator light deactivation:
      This function allows you to select the engine speed at which the indicator light is deactivated.
   e. Shift timing indicator light brightness:
      This function allows you to adjust the brightness of the indicator light to suit your preference.
   f. Throttle opening position display:
      This function allows you to choose whether or not to show the throttle opening position display.

TIP

The display shows the current setting for each function, except the shift timing indicator light activity function.

To adjust the brightness of the multifunction meter displays and tachometer
1. Turn the key to “OFF”.
2. Push and hold the “SELECT” button.
3. Turn the key to “ON”, and then release the “SELECT” button after five seconds.
4. Push the “RESET” button to select the desired brightness level.
5. Push the “SELECT” button to confirm the selected brightness level. The control mode changes to the shift timing indicator light activity function.

To set the shift timing indicator light activity function
1. Push the “RESET” button to select one of the following indicator light activity settings:
   - The indicator light stays on when activated. (This setting is selected when the indicator light stays on.)
   - The indicator light flashes when activated. (This setting is selected when the indicator light flashes four times per second.)
   - The indicator light is deactivated; in other words, it does not come on or flash. (This setting is selected when the indicator light flashes once every two seconds.)
2. Push the “SELECT” button to confirm the selected indicator light activity. The control mode changes to the shift timing indicator light activation function.

To set the shift timing indicator light activation function

TIP

The shift timing indicator light activation function can be set between 7000 r/min and 15000 r/min. From 7000 r/min to 12000 r/min, the indicator light can be set in increments of 500 r/min. From 12000 r/min to 15000 r/min, the indicator light can be set in increments of 200 r/min.

1. Push the “RESET” button to select the desired engine speed for activating the indicator light.
2. Push the “SELECT” button to confirm the selected engine speed. The control mode changes to the shift timing indicator light deactivation function.

To set the shift timing indicator light deactivation function

TIP

- The shift timing indicator light deactivation function can be set between 7000 r/min and 15000 r/min. From 7000 r/min to 12000 r/min, the indicator light can be set in increments of 500 r/min. From 12000 r/min to 15000 r/min, the indicator light can be set in increments of 200 r/min.
- Be sure to set the deactivation function to a higher engine speed than for the activation

function, otherwise the shift timing indicator light remains deactivated.

1. Push the “RESET” button to select the desired engine speed for deactivating the indicator light.
2. Push the “SELECT” button to confirm the selected engine speed. The control mode changes to the shift timing indicator light brightness function.

To adjust the shift timing indicator light brightness

1. Push the “RESET” button to select the desired indicator light brightness level.
2. Push the “SELECT” button to confirm the selected indicator light brightness level. The control mode changes to the throttle opening position display.

To set the throttle opening position display

1. Push the “RESET” button to select one of the following activity settings:
   - The throttle opening segments and “R1” are displayed.
   - “R1” is displayed only.
   - Neither throttle opening segments nor “R1” are displayed.
2. Push the “SELECT” button to confirm the selected throttle opening position display activity. The display returns to the odometer or tripmeter mode.

D-mode (drive mode)

D-mode is an electronically controlled engine performance system with three mode selections (“STD”, “A”, and “B”).
Push the drive mode switch “MODE” to switch between modes.

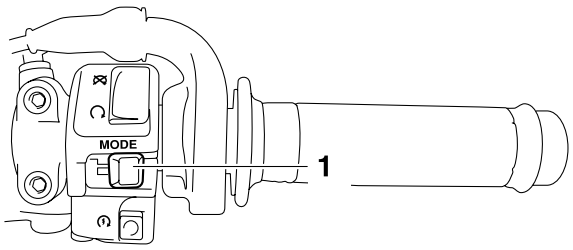

1. Drive mode switch “MODE”

TIP

Before using D-mode, make sure you understand its operation along with the operation of the drive mode switch “MODE”.

Mode “STD”

Mode “STD” is suitable for various riding conditions.
This mode allows the rider to enjoy smooth and sporty drivability from the low-speed range to the high-speed range.

Mode “A”

Mode “A” offers a sportier engine response in the low-to mid-speed range compared to mode “STD”.

Mode “B”

Mode “B” offers response that is somewhat less sharp compared to mode “STD” for riding situations that require especially sensitive throttle operation.

Drive mode switch “MODE”

EWA14B1025

WARNING

Do not change the D-mode while the vehicle is moving.

Using this switch changes the drive mode to “STD”, “A”, or “B” in the following order:
STD → A → B → STD
The throttle grip must be completely closed in order to change the drive mode.

TIP

- The mode is set to “STD” by default. The “STD” mode resets when the key is turned to “OFF”.
- The selected mode is shown on the drive mode display.

EAS20180
IMPORTANT INFORMATION

EAS20190
PREPARATION FOR REMOVAL AND DISASSEMBLY

1. Before removal and disassembly, remove all dirt, mud, dust and foreign material.

2. Use only the proper tools and cleaning equipment.
   Refer to “SPECIAL TOOLS” on page 1-19.
3. When disassembling, always keep mated parts together. This includes gears, cylinders, pistons and other parts that have been “mated” through normal wear. Mated parts must always be reused or replaced as an assembly.

4. During disassembly, clean all of the parts and place them in trays in the order of disassembly. This will speed up assembly and allow for the correct installation of all parts.
5. Keep all parts away from any source of fire.

EAS20200
REPLACEMENT PARTS

Use only genuine Yamaha parts for all replacements. Use oil and grease recommended by Yamaha for all lubrication jobs. Other brands may be similar in function and appearance, but inferior in quality.

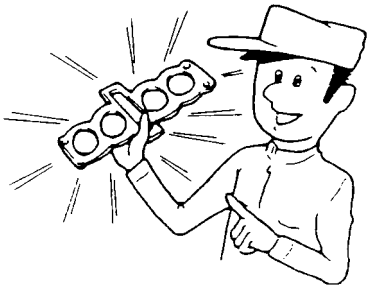

EAS20210
GASKETS, OIL SEALS AND O-RINGS

1. When overhauling the engine, replace all gaskets, seals and O-rings. All gasket surfaces, oil seal lips and O-rings must be cleaned.
2. During reassembly, properly oil all mating parts and bearings and lubricate the oil seal lips with grease.

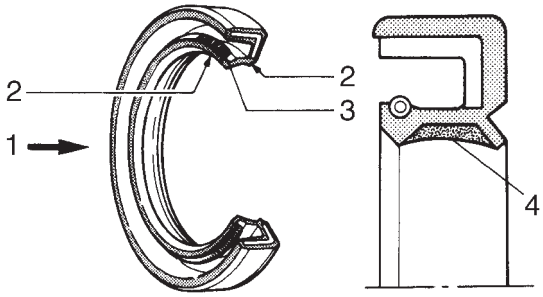

1. Oil
2. Lip
3. Spring
4. Grease

EAS20220
LOCK WASHERS/PLATES AND COTTER PINS

After removal, replace all lock washers/plates “1” and cotter pins. After the bolt or nut has been tightened to specification, bend the lock tabs along a flat of the bolt or nut.

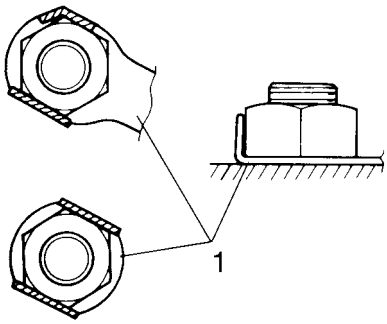

EAS20230
BEARINGS AND OIL SEALS
Install bearings and oil seals so that the manufacturer's marks or numbers are visible. When installing oil seals "1", lubricate the oil seal lips with a light coat of lithium-soap-based grease. Oil bearings liberally when installing, if appropriate.

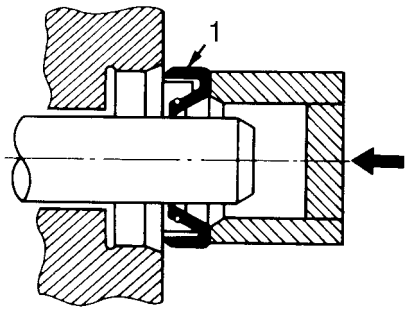

ECA13300
NOTICE

Do not spin the bearing with compressed air because this will damage the bearing surfaces.

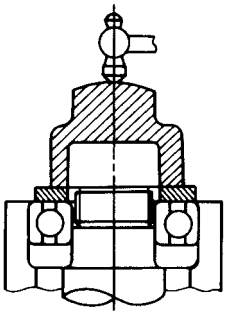

EAS20240
CIRCLIPS
Before reassembly, check all circlips carefully and replace damaged or distorted circlips. Always replace piston pin clips after one use. When installing a circlip "1", make sure the sharp-edged corner "2" is positioned opposite the thrust "3" that the circlip receives.

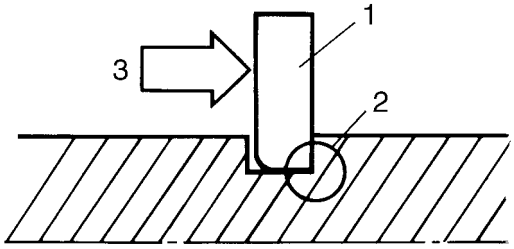

EAS20250
CHECKING THE CONNECTIONS

Check the leads, couplers, and connectors for stains, rust, moisture, etc.

1. Disconnect:
   - Lead
   - Coupler
   - Connector
2. Check:
   - Lead
   - Coupler
   - Connector
     Moisture → Dry with an air blower.
     Rust/stains → Connect and disconnect several times.

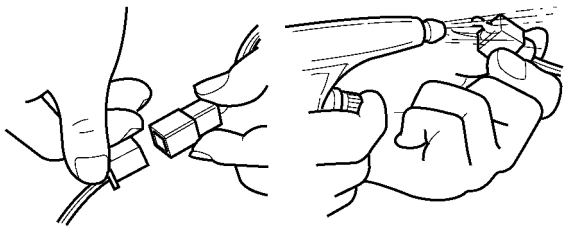

3. Check:
   - All connections
     Loose connection → Connect properly.

TIP
If the pin “1” on the terminal is flattened, bend it up.

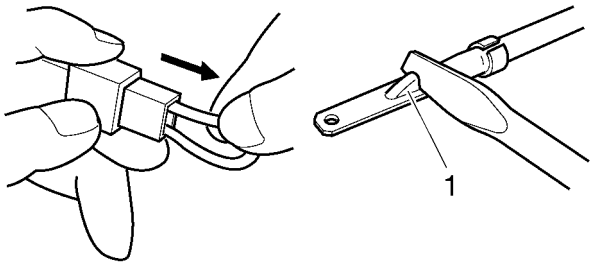

4. Connect:
   - Lead
   - Coupler
   - Connector

TIP
Make sure all connections are tight.

5. Check:
   - Continuity
     (with the pocket tester)

Pocket tester
90890-03112
Analog pocket tester
YU-03112-C

TIP
- If there is no continuity, clean the terminals.
- When checking the wire harness, perform steps (1) to (3).
- As a quick remedy, use a contact revitalizer available at most part stores.

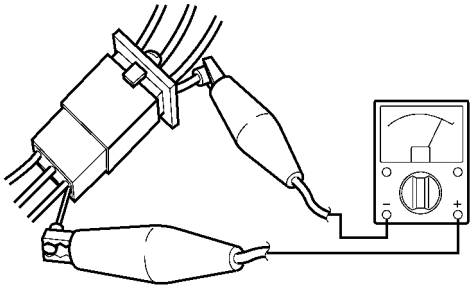

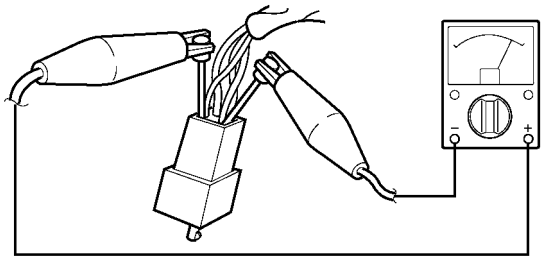

EAS14B1120

HANDLING THE ELECTRONIC PARTS

Electronic parts is very sensitive.
Handle with care and do not give impact.

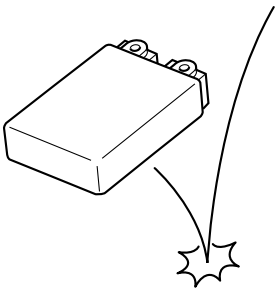

Mankind has static electricity and it's voltage is very high and electronic parts is very sensitive. It has possibility that inside small parts of electronic parts is destroyed by static electricity.
Do not touch and do not make it dirty.

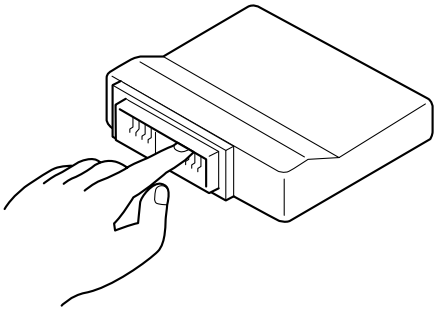

When you disconnect electronic parts from wire harness, always turn off main switch.
If you disconnect above condition, it may gives damages to electronic parts.

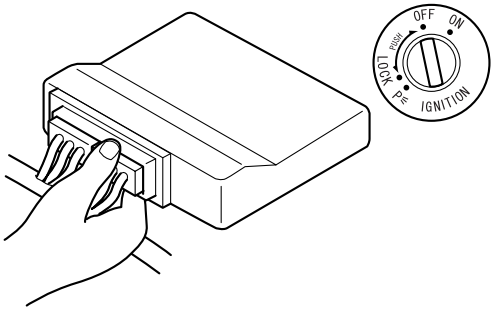

EAS20260

SPECIAL TOOLS

The following special tools are necessary for complete and accurate tune-up and assembly. Use only the appropriate special tools as this will help prevent damage caused by the use of inappropriate tools or improvised techniques. Special tools, part numbers or both may differ depending on the country.
When placing an order, refer to the list provided below to avoid any mistakes.

TIP

- For U.S.A. and Canada, use part number starting with “YM-”, “YU-”, or “ACC-”.
- For others, use part number starting with “90890-”.

Tool name/Tool No.	Illustration	Reference pages
Piston pin puller set 90890-01304 Piston pin puller YU-01304	90890-01304 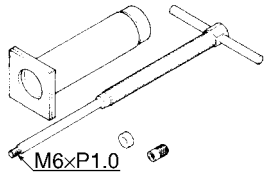 YU-01304 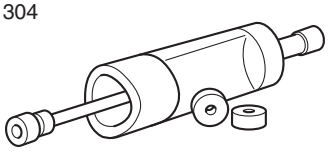	5-76
Radiator cap tester 90890-01325 Radiator pressure tester YU-24460-01	90890-01325 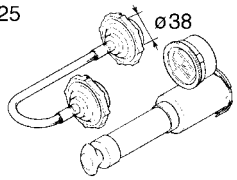 YU-24460-01 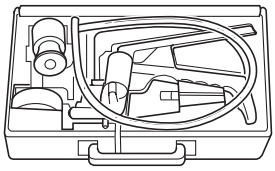	6-3
Radiator cap tester adapter 90890-01352 Radiator pressure tester adapter YU-33984	90890-01352 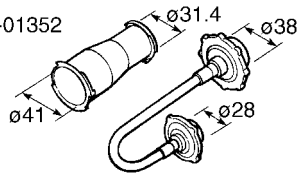 YU-33984 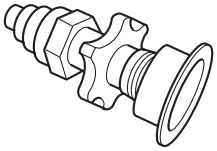	6-3

Tool name/Tool No.	Illustration	Reference pages
Steering nut wrench 90890-01403 Exhaust flange nut wrench YU-A9472	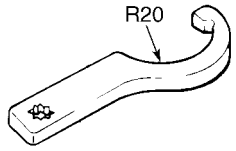	3-21, 4-73
Damper rod holder 90890-01506 YM-01506	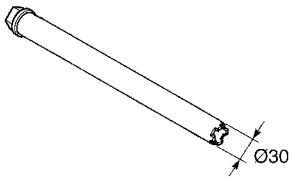	4-64, 4-66
Oil filter wrench 90890-01426 YU-38411	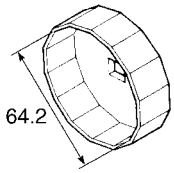	3-27
Rod holder 90890-01434 Damper rod holder double ended YM-01434	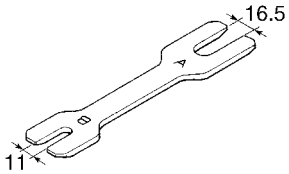	4-63, 4-69
Rod puller 90890-01437 Universal damping rod bleeding tool set YM-A8703	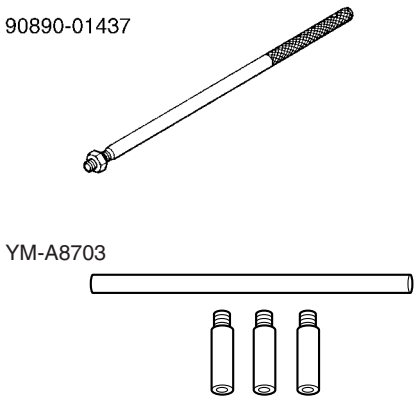	4-67, 4-69

Tool name/Tool No.	Illustration	Reference pages
Rod puller attachment (M10) 90890-01436 Universal damping rod bleeding tool set YM-A8703	90890-01436 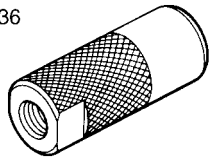 YM-A8703 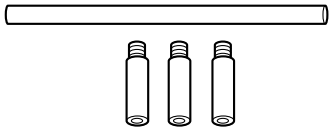	4-67, 4-69
Fork spring compressor 90890-01441 YM-01441	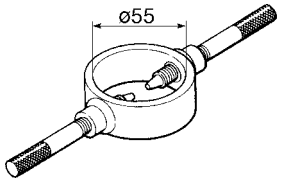	4-63, 4-69
Fork seal driver 90890-01442 Adjustable fork seal driver (36–46 mm) YM-01442	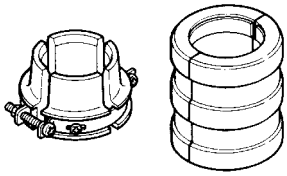	4-66, 4-67
Vacuum gauge 90890-03094 Carburetor synchronizer YU-44456	90890-03094 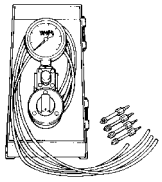 YU-44456 	3-9
Compression gauge 90890-03081 Engine compression tester YU-33223	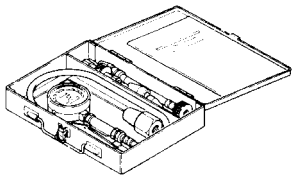	5-1

Tool name/Tool No.	Illustration	Reference pages
Thickness gauge 90890-03180 Feeler gauge set YU-26900-9	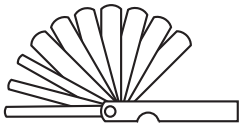	3-7
Valve spring compressor 90890-04019 YM-04019	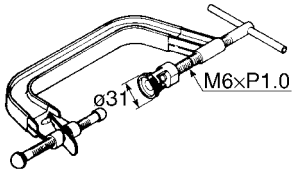	5-30, 5-36
Valve spring compressor attachment 90890-04108 Valve spring compressor adapter 22 mm YM-04108	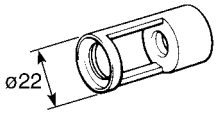	5-30, 5-36
Middle driven shaft bearing driver 90890-04058 Bearing driver 40 mm YM-04058	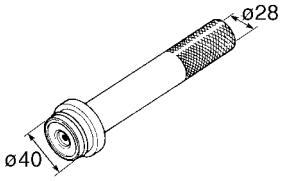	6-14
Mechanical seal installer 90890-04132 Water pump seal installer YM-33221-A	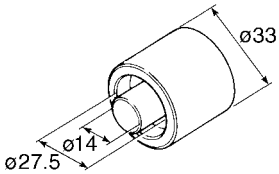	6-14
Universal clutch holder 90890-04086 YM-91042	90890-04086 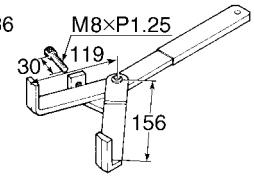 YM-91042 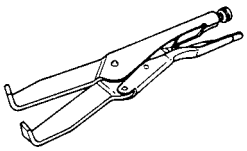	5-63, 5-67

Tool name/Tool No.	Illustration	Reference pages
Valve guide remover (ø5) 90890-04097 Valve guide remover (5.0 mm) YM-04097	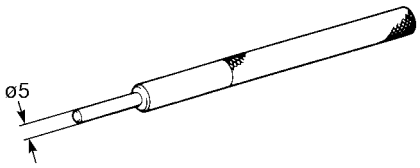	5-32
Valve guide remover (ø4.5) 90890-04116 Valve guide remover (4.5 mm) YM-04116	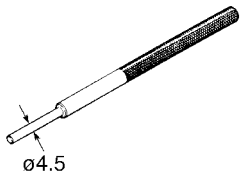	5-32
Valve guide installer (ø5) 90890-04098 Valve guide installer (5.0 mm) YM-04098		5-32
Valve guide installer (ø4.5) 90890-04117 Valve guide installer (4.5 mm) YM-04117	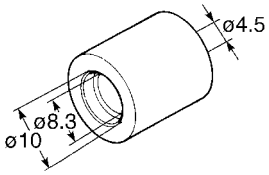	5-32
Valve guide reamer (ø5) 90890-04099 Valve guide reamer (5.0 mm) YM-04099	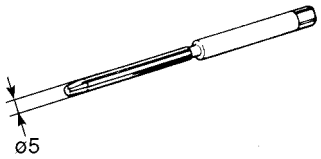	5-32
Valve guide reamer (ø4.5) 90890-04118 Valve guide reamer (4.5 mm) YM-04118	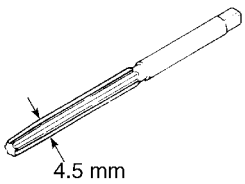	5-32
Ignition checker 90890-06754 Opama pet-4000 spark checker YU-34487	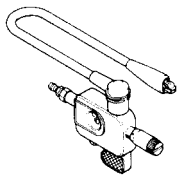	8-116
Pivot shaft wrench 90890-01471 Frame spanner socket YM-01471	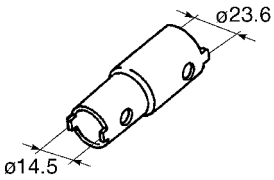	5-10

Tool name/Tool No.	Illustration	Reference pages
Pivot shaft wrench adapter 90890-01476	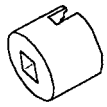	5-10
Valve lapper 90890-04101 Valve lapping tool YM-A8998	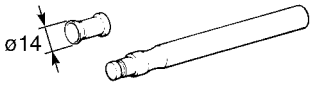	3-8
Oil pressure adapter H 90890-03139	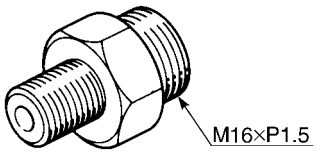	3-29
Pressure gauge 90890-03153 YU-03153	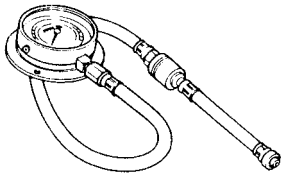	3-29, 7-18
Fuel pressure adapter 90890-03176 YM-03176	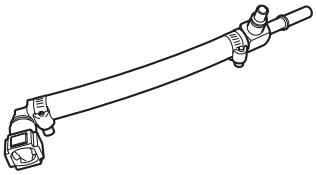	7-18
Fuel injector pressure adapter 90890-03210 YU-03210	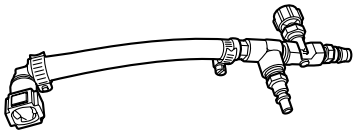	7-18
Camshaft wrench 90890-04143 YM-04143	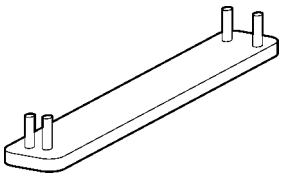	5-18, 5-21
Ring nut wrench 90890-01507 YM-01507	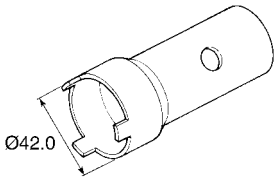	4-81, 4-83

Tool name/Tool No.	Illustration	Reference pages
Damper rod holder (22 mm) 90890-01365	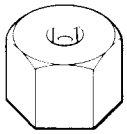	4-82, 4-83
Drive chain cut & rivet tool 90890-01550	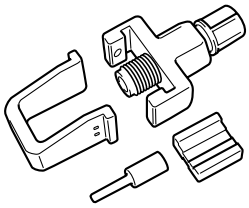	4-85, 4-86
Piston installing tool 90890-04161 YM-04161	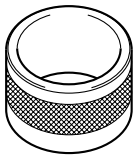	5-81
Rotor puller 2K7-85555-00	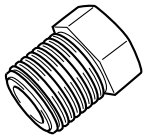	5-38
Sheave holder 90890-01701 Primary clutch holder YS-01880-A	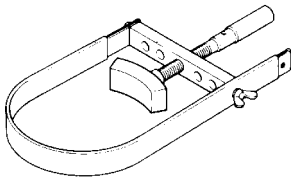	5-38, 5-41, 5-42, 5-44
Pocket tester 90890-03112 Analog pocket tester YU-03112-C	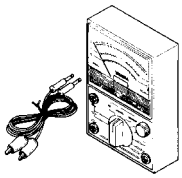	1-17, 5-48, 8-107, 8-108, 8-109, 8-113, 8-114, 8-115, 8-116, 8-117, 8-118, 8-119, 8-120, 8-121, 8-122, 8-123, 8-124, 8-125, 8-126, 8-127, 8-128
Digital circuit tester 90890-03174 Model 88 Multimeter with tachometer YU-A1927	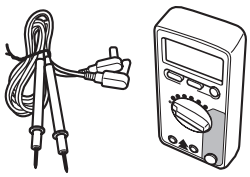	8-124, 8-126

Tool name/Tool No.	Illustration	Reference pages
Digital tachometer 90890-06760 YU-39951-B	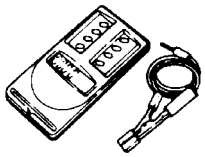	3-9
Test harness-speed sensor (3P) 90890-03208 YU-03208	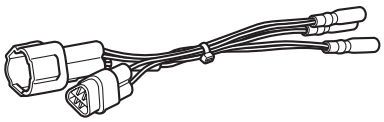	8-121, 8-125
Test harness-lean angle sensor (6P) 90890-03209 YU-03209	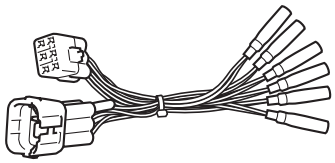	8-117
Test harness S-pressure sensor 5S7 (3P) 90890-03211 YU-03211	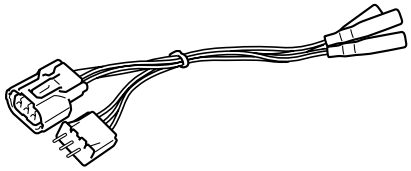	8-124, 8-126
Yamaha bond No. 1215 (Three bond No. 1215®) 90890-85505	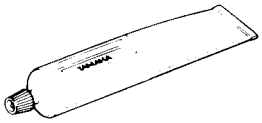	5-24, 5-39, 5-45, 5-73

SPECIFICATIONS

EAS20280

GENERAL SPECIFICATIONS

Model	
Model	14B4/14B7 (USA) 14B5/14B8 (California)
Dimensions	
Overall length	2070 mm (81.5 in)
Overall width	715 mm (28.1 in)
Overall height	1130 mm (44.5 in)
Seat height	835 mm (32.9 in)
Wheelbase	1415 mm (55.7 in)
Ground clearance	135 mm (5.31 in)
Minimum turning radius	3500 mm (137.8 in)
Weight	
With oil and fuel	206 kg (454 lb)
Maximum load	189 kg (417 lb)

EAS20290
ENGINE SPECIFICATIONS

Engine	
Engine type	Liquid cooled 4-stroke, DOHC
Displacement	998.0 cm^3
Cylinder arrangement	Forward-inclined parallel 4-cylinder
Bore × stroke	78.0 × 52.2 mm (3.07 × 2.06 in)
Compression ratio	12.70 : 1
Standard compression pressure (at sea level)	1480 kPa/350 r/min (14.8 kgf/cm^2/350 r/min, 210.5 psi/350 r/min)
Minimum–Maximum	1290–1660 kPa/350 r/min (12.9–16.6 kgf/cm^2/350 r/min, 183.5–236.1 psi/350 r/min)
Starting system	Electric starter
Fuel	
Recommended fuel	Premium unleaded gasoline only
Fuel tank capacity	18.0 L (4.76 US gal, 3.96 Imp.gal)
Fuel reserve amount	3.1 L (0.82 US gal, 0.68 Imp.gal)
Engine oil	
Type	YAMALUBE 4 10W-40 or YAMALUBE 4 20W-50, SAE 10W-40 or SAE 20W-50
Recommended engine oil grade	API service SG type or higher, JASO standard MA
Lubrication system	Wet sump
Engine oil quantity	
Total amount	4.58 L (4.84 US qt, 4.03 Imp.qt)
Without oil filter cartridge replacement	3.73 L (3.94 US qt, 3.28 Imp.qt)
With oil filter cartridge replacement	3.93 L (4.15 US qt, 3.46 Imp.qt)
Oil filter	
Oil filter type	Formed
Oil pump	
Oil pump type	Trochoid
Inner-rotor-to-outer-rotor-tip clearance	Less than 0.12 mm (0.0047 in)
Limit	0.20 mm (0.0079 in)
Outer-rotor-to-oil-pump-housing clearance	0.090–0.190 mm (0.0035–0.0075 in)
Limit	0.260 mm (0.0102 in)
Oil-pump-housing-to-inner-and-outer-rotor clearance	0.06–0.13 mm (0.0024–0.0051 in)
Limit	0.200 mm (0.0079 in)
Oil pressure	240.0 kPa/5000 r/min (2.40 kgf/cm^2/5000 r/min, 34.8 psi/5000 r/min)
Bypass valve opening pressure	80.0–120.0 kPa (0.80–1.20 kgf/cm^2, 11.6–17.4 psi)
Relief valve operating pressure	700.0–820.0 kPa (7.00–8.20 kgf/cm^2, 101.5–118.9 psi)
Cooling system	
Radiator capacity (including all routes)	2.73 L (2.89 US qt, 2.40 Imp.qt)
Coolant reservoir capacity (up to the maximum level mark)	0.25 L (0.26 US qt, 0.22 Imp.qt)
Radiator cap opening pressure	107.9–137.3 kPa (1.08–1.37 kgf/cm^2, 15.6–19.9 psi)
Thermostat	
Valve opening temperature	71 °C (159.8 °F)

Valve full open temperature	85 °C (185.0 °F)
Valve lift (full open)	More than 8 mm (0.31 in)
Radiator core	
Width	383.0 mm (15.08 in)
Height	250.6 mm (9.87 in)
Depth	24.0 mm (0.94 in)
Water pump	
Water pump type	Single suction centrifugal pump
Reduction ratio	65/43 × 28/36 (1.176)
Impeller shaft tilt limit	0.15 mm (0.006 in)

Spark plug(s)

Manufacturer/model	NGK/LMAR9E-J
Spark plug gap	0.6–0.7 mm (0.024–0.028 in)

Cylinder head

Volume	14.43–15.23 cm³ (0.88–0.93 cu.in)
Warpage limit	0.10 mm (0.0039 in)

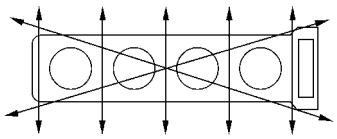

Camshaft

Drive system	Chain drive (right)
Camshaft cap inside diameter	25.500–25.521 mm (1.0039–1.0048 in)
Camshaft journal diameter	25.459–25.472 mm (1.0023–1.0028 in)
Camshaft-journal-to-camshaft-cap clearance	0.028–0.062 mm (0.0011–0.0024 in)
Camshaft lobe dimensions	
Intake A	37.350–37.450 mm (1.4705–1.4744 in)
Limit	37.250 mm (1.4665 in)
Intake B	28.034–28.134 mm (1.1037–1.1076 in)
Limit	27.934 mm (1.0998 in)
Exhaust A	36.450–36.550 mm (1.4350–1.4390 in)
Limit	36.350 mm (1.4311 in)
Exhaust B	28.006–28.106 mm (1.1026–1.1065 in)
Limit	27.906 mm (1.0987 in)

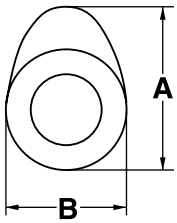

Camshaft runout limit	0.030 mm (0.0012 in)

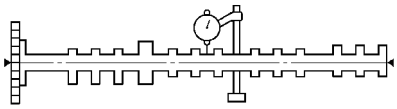

Timing chain

Tensioning system	Automatic

Valve, valve seat, valve guide

Valve clearance (cold)	
Intake	0.11–0.20 mm (0.0043–0.0079 in)
Exhaust	0.21–0.25 mm (0.0083–0.0098 in)
Valve dimensions	
Valve head diameter A (intake)	30.90–31.10 mm (1.2165–1.2244 in)
Valve head diameter A (exhaust)	24.90–25.10 mm (0.9803–0.9882 in)

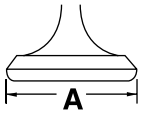

Valve face width B (intake)	1.200–2.475 mm (0.0472–0.0974 in)
Valve face width B (exhaust)	1.625–2.900 mm (0.0640–0.1142 in)

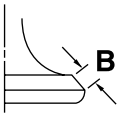

Valve seat width C (intake)	0.90–1.10 mm (0.0354–0.0433 in)
Limit	1.60 mm (0.06 in)
Valve seat width C (exhaust)	1.10–1.30 mm (0.0433–0.0512 in)
Limit	1.80 mm (0.07 in)

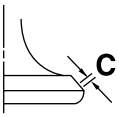

Valve margin thickness D (intake)	1.35–1.75 mm (0.0532–0.0689 in)
Valve margin thickness D (exhaust)	0.50–0.90 mm (0.0197–0.0354 in)

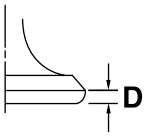

Valve stem diameter (intake)	4.975–4.990 mm (0.1959–0.1965 in)
Limit	4.960 mm (0.1953 in)
Valve stem diameter (exhaust)	4.460–4.475 mm (0.1756–0.1762 in)
Limit	4.425 mm (0.1742 in)
Valve guide inside diameter (intake)	5.000–5.012 mm (0.1969–0.1973 in)
Limit	5.050 mm (0.1988 in)
Valve guide inside diameter (exhaust)	4.500–4.512 mm (0.1772–0.1776 in)
Limit	4.550 mm (0.1791 in)
Valve-stem-to-valve-guide clearance (intake)	0.010–0.037 mm (0.0004–0.0015 in)
Limit	0.080 mm (0.0032 in)
Valve-stem-to-valve-guide clearance (exhaust)	0.025–0.052 mm (0.0010–0.0020 in)
Limit	0.100 mm (0.0039 in)
Valve stem runout	0.010 mm (0.0004 in)

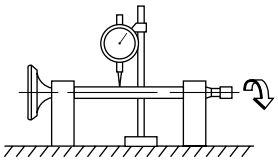

Valve spring	
Inner spring	
Free length (intake)	39.33 mm (1.55 in)
Limit	37.36 mm (1.47 in)
Free length (exhaust)	37.96 mm (1.49 in)
Limit	36.06 mm (1.42 in)
Installed length (intake)	34.50 mm (1.36 in)
Installed length (exhaust)	33.00 mm (1.30 in)
Spring rate K1 (intake)	41.57 N/mm (4.24 kgf/mm, 237.36 lbf/in)
Spring rate K2 (intake)	55.62 N/mm (5.67 kgf/mm, 317.59 lbf/in)
Spring rate K1 (exhaust)	40.10 N/mm (4.09 kgf/mm, 228.97 lbf/in)
Spring rate K2 (exhaust)	59.31 N/mm (6.05 kgf/mm, 338.66 lbf/in)
Installed compression spring force (intake)	187.00–215.00 N (19.07–21.92 kgf, 42.04–48.33 lbf)
Installed compression spring force (exhaust)	185.00–213.00 N (18.86–21.72 kgf, 41.59–47.88 lbf)
Spring tilt limit (intake)	2.5°/1.7 mm (0.067 in)
Spring tilt limit (exhaust)	2.5°/1.7 mm (0.067 in)

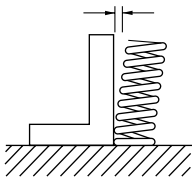

Winding direction (intake)	Clockwise
Winding direction (exhaust)	Clockwise
Cylinder	
Bore	78.000–78.010 mm (3.0709–3.0713 in)
Taper limit	0.050 mm (0.0020 in)
Out of round limit	0.050 mm (0.0020 in)
Piston	
Piston-to-cylinder clearance	0.010–0.035 mm (0.0004–0.0014 in)
Limit	0.150 mm (0.0059 in)
Piston diameter	77.975–77.990 mm (3.0699–3.0705 in)
Height H	12.0 mm (0.47 in)

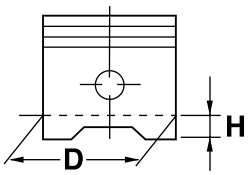

Offset	0.00 mm (0.0000 in)
Piston pin bore inside diameter	17.002–17.013 mm (0.6694–0.6698 in)
Limit	17.043 mm (0.6710 in)
Piston pin outside diameter	16.991–17.000 mm (0.6689–0.6693 in)
Limit	16.971 mm (0.6682 in)
Piston-pin-to-piston-pin-bore clearance	0.002–0.022 mm (0.0001–0.0009 in)
Limit	0.072 mm (0.0028 in)
Piston ring	
Top ring	
Ring type	Barrel
Dimensions (B × T)	0.90 × 2.75 mm (0.04 × 0.11 in)

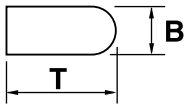

End gap (installed)	0.15–0.25 mm (0.0059–0.0098 in)
Limit	0.50 mm (0.0197 in)
Ring side clearance	0.030–0.065 mm (0.0012–0.0026 in)
Limit	0.115 mm (0.0045 in)
2nd ring	
Ring type	Taper
Dimensions (B × T)	0.80 × 2.75 mm (0.03 × 0.11 in)

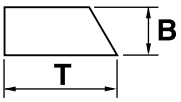

End gap (installed)	0.30–0.45 mm (0.0118–0.0177 in)
Limit	0.80 mm (0.0315 in)
Ring side clearance	0.020–0.055 mm (0.0008–0.0022 in)
Limit	0.115 mm (0.0045 in)
Oil ring	
Dimensions (B × T)	1.50 × 2.25 mm (0.06 × 0.09 in)

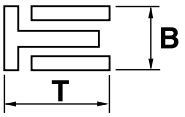

End gap (installed)	0.10–0.40 mm (0.0039–0.0157 in)

Connecting rod

Crankshaft-pin-to-big-end-bearing clearance	0.034–0.058 mm (0.0013–0.0023 in)
Limit	0.09 mm (0.0035 in)
Bearing color code	1.Blue 2.Black 3.Brown 4.Green

Crankshaft

Width A	59.40–60.10 mm (2.339–2.366 in)
Width B	301.80–303.00 mm (11.88–11.93 in)
Runout limit C	0.030 mm (0.0012 in)
Big end side clearance D	0.160–0.262 mm (0.0063–0.0103 in)

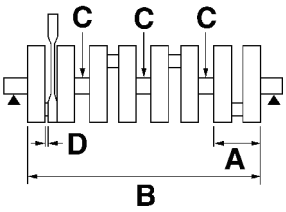

Journal oil clearance	0.004–0.039 mm (0.0002–0.0015 in)
Bearing color code	1.Blue 2.Black 3.Brown 4.Green 5.Yellow

Balancer shaft

Balancer shaft runout limit	0.030 mm (0.0012 in)
Journal oil clearance	0.012–0.043 mm (0.0005–0.0017 in)
Bearing color code	0.White 1.Blue 2.Black 3.Brown 4.Green 5.Yellow 6.Pink

Clutch	
Clutch type	Wet, multiple-disc
Clutch release method	Outer pull, rack and pinion pull
Clutch lever free play	10.0–15.0 mm (0.39–0.59 in)
Friction plate thickness	2.92–3.08 mm (0.115–0.121 in)
Wear limit	2.82 mm (0.111 in)
Plate quantity	9 pcs
Clutch plate thickness	1.90–2.10 mm (0.075–0.083 in)
Plate quantity	8 pcs
Warpage limit	0.10 mm (0.0039 in)
Clutch spring free length	43.80 mm (1.72 in)
Limit	41.61 mm (1.64 in)
Spring quantity	6 pcs
Transmission	
Transmission type	Constant mesh 6-speed
Primary reduction system	Spur gear
Primary reduction ratio	65/43 (1.512)
Secondary reduction system	Chain drive
Secondary reduction ratio	47/17 (2.765)
Operation	Left foot operation
Gear ratio	
1st	38/15 (2.533)
2nd	33/16 (2.063)
3rd	37/21 (1.762)
4th	35/23 (1.522)
5th	30/22 (1.364)
6th	33/26 (1.269)
Main axle runout limit	0.08 mm (0.0032 in)
Drive axle runout limit	0.08 mm (0.0032 in)
Shifting mechanism	
Shift mechanism type	Shift drum and guide bar
Shift fork guide bar bending limit	0.100 mm (0.0039 in)
Shift fork-L thickness	5.795–5.868 mm (0.2281–0.2310 in)
Shift fork-C thickness	5.795–5.868 mm (0.2281–0.2310 in)
Shift fork-R thickness	5.760–5.890 mm (0.2268–0.2319 in)
Air filter	
Air filter element	Oil-coated paper element
Fuel pump	
Pump type	Electrical
Maximum consumption amperage	6.0 A
Fuel pressure	324.0 kPa (3.24 kgf/cm², 47.0 psi)
Fuel injector	
Model/quantity	297500–1470/4 (Pri) , 297500–1640/4 (2nd)
Fuel injector resistance	12.0 Ω at 20 °C (68 °F)
Throttle body	
Type/quantity	45EIDW/1
ID mark	14B1 00 (USA) 14B5 10 (California)
Throttle position sensor	
Throttle position sensor resistance	1.2–2.8 kΩ

Accelerator position sensor resistance	1.2–2.8 kΩ
Output voltage (at idle)	0.63–0.73 V
Fuel injection sensor	
Crankshaft position sensor resistance	248–372 Ω at 20 °C (68 °F)
Cylinder identification sensor output voltage (ON)	Less than 0.8 V
Cylinder identification sensor output voltage (OFF)	More than 4.8 V
Atmospheric pressure sensor output voltage	3.57–3.71 V at 101.32 kPa
Intake air pressure sensor output voltage	3.57–3.71 V at 101.32 kPa
Intake air temperature sensor resistance	5.4–6.6 kΩ at 0 °C (32 °F) 290–390 Ω at 80 °C (176 °F)
Air induction system	
Reed valve bending limit	0.4 mm (0.016 in)
Solenoid resistance	18–22 Ω at 20 °C (68 °F)
Idling condition	
Engine idling speed	1150–1250 r/min
CO%	2.6–3.6 %
Intake vacuum (#1, #3, #4)	24.0 kPa (180 mmHg, 7.1 inHg)
Intake vacuum (#2)	25.3 kPa (192 mmHg, 7.6 inHg)
Water temperature	95.0–105.0 °C (203.0–221.0 °F)
Oil temperature	75.0–85.0 °C (167.0–185.0 °F)
Throttle cable free play	3.0–5.0 mm (0.12–0.20 in)

EAS20300
CHASSIS SPECIFICATIONS

Chassis	
Frame type	Diamond
Caster angle	24.0°
Trail	102.0 mm (4.02 in)
Front wheel	
Wheel type	Cast wheel
Rim size	17M/C × MT3.50
Rim material	Aluminum
Wheel travel	120.0 mm (4.72 in)
Radial wheel runout limit	1.0 mm (0.04 in)
Lateral wheel runout limit	0.5 mm (0.02 in)
Rear wheel	
Wheel type	Cast wheel
Rim size	17M/C × MT6.00
Rim material	Aluminum
Wheel travel	120.0 mm (4.72 in)
Radial wheel runout limit	1.0 mm (0.04 in)
Lateral wheel runout limit	0.5 mm (0.02 in)
Front tire	
Type	Tubeless
Size	120/70 ZR17M/C (58W)
Manufacturer/model	DUNLOP/D210F
Wear limit (front)	1.0 mm (0.04 in)
Rear tire	
Type	Tubeless
Size	190/55 ZR17M/C (75W)
Manufacturer/model	DUNLOP/D210
Wear limit (rear)	1.0 mm (0.04 in)
Tire air pressure (measured on cold tires)	
Loading condition	0–90 kg (0–198 lb)
Front	250 kPa (2.50 kgf/cm², 36 psi, 2.50 bar)
Rear	290 kPa (2.90 kgf/cm², 42 psi, 2.90 bar)
Loading condition	90–189 kg (198–417 lb)
Front	250 kPa (2.50 kgf/cm², 36 psi, 2.50 bar)
Rear	290 kPa (2.90 kgf/cm², 42 psi, 2.90 bar)
High-speed riding	
Front	250 kPa (2.50 kgf/cm², 36 psi, 2.50 bar)
Rear	290 kPa (2.90 kgf/cm², 42 psi, 2.90 bar)
Front brake	
Type	Dual disc brake
Operation	Right hand operation
Front disc brake	
Disc outside diameter × thickness	310.0 × 5.0 mm (12.20 × 0.20 in)
Brake disc thickness limit	4.5 mm (0.18 in)
Brake disc deflection limit	0.10 mm (0.0039 in)
Brake pad lining thickness (inner)	4.5 mm (0.18 in)
Limit	0.8 mm (0.03 in)

Brake pad lining thickness (outer)	4.5 mm (0.18 in)
Limit	0.8 mm (0.03 in)
Master cylinder inside diameter	16.00 mm (0.63 in)
Caliper cylinder inside diameter	24.05 mm × 3 (0.95 in × 3)
Recommended fluid	DOT 4
Rear brake	
Type	Single disc brake
Operation	Right foot operation
Brake pedal position	12–21 mm (0.47–0.83 in)
Rear disc brake	
Disc outside diameter × thickness	220.0 × 5.0 mm (8.66 × 0.20 in)
Brake disc thickness limit	4.5 mm (0.18 in)
Brake disc deflection limit	0.15 mm (0.0059 in)
Brake pad lining thickness (inner)	6.0 mm (0.24 in)
Limit	1.0 mm (0.04 in)
Brake pad lining thickness (outer)	6.0 mm (0.24 in)
Limit	1.0 mm (0.04 in)
Master cylinder inside diameter	12.7 mm (0.50 in)
Caliper cylinder inside diameter	38.18 mm (1.50 in)
Recommended fluid	DOT 4
Steering	
Steering bearing type	Angular bearing
Center to lock angle (left)	27.0°
Center to lock angle (right)	27.0°
Front suspension	
Type	Telescopic fork
Spring/shock absorber type	Coil spring/oil damper
Front fork travel	120.0 mm (4.72 in)
Fork spring free length	271.5 mm (10.69 in)
Limit	266.1 mm (10.48 in)
Collar length	118.4 mm (4.66 in)
Installed length	262.0 mm (10.31 in)
Spring rate K1	9.60 N/mm (0.98 kgf/mm, 54.82 lb/in)
Spring stroke K1	0.0–120.0 mm (0.00–4.72 in)
Inner tube outer diameter	43.0 mm (1.69 in)
Inner tube bending limit	0.2 mm (0.01 in)
Optional spring available	No
Recommended oil	Suspension oil M1
Quantity	528.0 cm^3 (17.85 US oz, 18.62 Imp.oz)
Level	117.0 mm (4.61 in)
Spring preload adjusting positions	
Minimum	0
Standard	2
Maximum	5
Rebound damping adjusting positions	
Minimum	25
Standard	12
Maximum	1
Compression damping adjusting positions	
Minimum	25
Standard	20
Maximum	1

Rear suspension	
Type	Swingarm (link suspension)
Spring/shock absorber type	Coil spring/gas-oil damper
Rear shock absorber assembly travel	60.0 mm (2.36 in)
Spring free length	159.5 mm (6.28 in)
Installed length	147.5 mm (5.81 in)
Spring rate K1	98.10 N/mm (10.00 kgf/mm, 560.15 lb/in)
Spring stroke K1	0.0–60.0 mm (0.00–2.36 in)
Optional spring available	No
Enclosed gas/air pressure (STD)	1200 kPa (12.0 kgf/cm², 170.7 psi)
Spring preload adjusting positions	
Minimum	16
Standard	8
Maximum	0
Rebound damping adjusting positions	
Minimum	20
Standard	15
Maximum	3
Compression damping setting (for fast compression damping)	
Minimum	4
Standard	3
Maximum	0
Compression damping setting (for slow compression damping)	
Minimum	20
Standard	9
Maximum	1
Swingarm	
Swingarm end free play limit (radial)	1.0 mm (0.04 in)
Swingarm end free play limit (axial)	1.0 mm (0.04 in)
Drive chain	
Type/manufacturer	50VAZ/DAIDO
Number of links	120
Drive chain slack (when adjusting the drive chain)	25.0–35.0 mm (0.98–1.38 in)
Drive chain slack (when replacing the drive chain and sprocket)	20.0–30.0 mm (0.79–1.18 in)
15-link length limit	239.3 mm (9.42 in)
Shift pedal	
Installed shift rod length	262.5–265.5 mm (10.33–10.45 in)

EAS20310
ELECTRICAL SPECIFICATIONS

Voltage	
System voltage	12 V
Ignition system	
Ignition system	TCI (digital)
Ignition timing (B.T.D.C.)	5.0°/1200 r/min
Engine control unit	
Model/manufacturer	TBDF66/DENSO
Ignition coil	
Minimum ignition spark gap	6.0 mm (0.24 in)
Primary coil resistance	0.85–1.15 Ω
Secondary coil resistance	8.50–11.50 kΩ
AC magneto	
Standard output	14.0 V, 33.0 A at 5000 r/min
Stator coil resistance	0.112–0.168 Ω at 20 °C (68 °F)
Rectifier/regulator	
Regulator type	Semi conductor-short circuit
Rectifier/regulator output voltage	14.2–14.8 V
Rectifier/regulator input voltage	above 14 V at 5000 r/min
Rectifier capacity	50.0 A
Lean angle sensor	
Lean angle sensor output voltage	
Less than 45°	0.4–1.4 V
More than 45°	3.7–4.4 V
Battery	
Model	YTZ10S
Voltage, capacity	12 V, 8.6 Ah
Specific gravity	1.31
Manufacturer	GS YUASA
Ten hour rate amperage	0.90 A
Headlight	
Bulb type	Halogen bulb
Bulb voltage, wattage × quantity	
Headlight	12 V, 55 W × 2
Auxiliary light	12 V, 5.0 W × 2
Tail/brake light	LED
Front turn signal/position light	12 V, 21 W/5.0 W × 2
Rear turn signal light	12 V, 21.0 W × 2
License plate light	12 V, 5.0 W × 1
Meter lighting	LED
Indicator light	
Neutral indicator light	LED
Turn signal indicator light	LED
Oil level warning light	LED
High beam indicator light	LED
Fuel level warning light	LED

Coolant temperature warning light	LED
Engine trouble warning light	LED
Steering damper warning light	LED
Shift timing indicator light	LED
Electric starting system	
System type	Constant mesh
Starter motor	
Power output	0.90 kW
Armature coil	
Commutator resistance	0.0090–0.0110 Ω at 20 °C (68 °F)
Insulation resistance	Above 1 MΩ at 20 °C (68 °F)
Brush overall length	10.8 mm (0.43 in)
Limit	7.19 mm (0.28 in)
Brush spring force	5.28–7.92 N (538–808 gf, 19.01–28.51 oz)
Commutator diameter	24.5 mm (0.96 in)
Limit	23.5 mm (0.93 in)
Mica undercut (depth)	1.50 mm (0.06 in)
Starter relay	
Amperage	180.0 A
Coil resistance	4.18–4.62 Ω
Horn	
Horn type	Plane
Quantity	1 pcs
Maximum amperage	3.0 A
Coil resistance	1.07–1.11 Ω at 20 °C (68 °F)
Turn signal relay	
Relay type	Full transistor
Built-in, self-canceling device	No
Oil level switch	
Maximum level position resistance	484–536 Ω
Minimum level position resistance	114–126 Ω
Fuel gauge	
Fuel sender resistance	14–141 Ω at 20 °C (68 °F)
Speed sensor	
Output voltage reading cycle	0.6 V to 4.8 V to 0.6 V to 4.8 V
Coolant temperature sensor	
Resistance at 0 °C (32 °F)	5.21–6.37 kΩ
Resistance at 20 °C (68 °F)	2.45 kΩ
Resistance at 80 °C (176 °F)	290–354 Ω
Throttle servo motor	
Throttle servo motor resistance	1.23–1.67 Ω
Steering damper solenoid	
Steering damper solenoid resistance	49.82–56.18 Ω at 20 °C (68 °F)
Fuses	
Main fuse	50.0 A
Headlight fuse	20.0 A

Signaling system fuse	7.5 A
Ignition fuse	15.0 A
Radiator fan fuse	15.0 A × 2
Fuel injection system fuse	15.0 A
Steering damper fuse	7.5 A
Backup fuse	7.5 A
ETV (Electronic Throttle Valve) fuse	7.5 A
Spare fuse	20.0 A
Spare fuse	15.0 A × 2
Spare fuse	7.5 A

EAS20320
TIGHTENING TORQUES

EAS20330
GENERAL TIGHTENING TORQUE SPECIFICATIONS

This chart specifies tightening torques for standard fasteners with a standard ISO thread pitch. Tightening torque specifications for special components or assemblies are provided for each chapter of this manual. To avoid warpage, tighten multi-fastener assemblies in a crisscross pattern and progressive stages until the specified tightening torque is reached. Unless otherwise specified, tightening torque specifications require clean, dry threads. Components should be at room temperature.

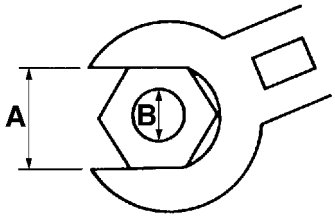

A. Distance between flats
B. Outside thread diameter

A (nut)	B (bolt)	General tightening torques		
		Nm	m·kgf	ft·lbf
10 mm	6 mm	6	0.6	4.3
12 mm	8 mm	15	1.5	11
14 mm	10 mm	30	3.0	22
17 mm	12 mm	55	5.5	40
19 mm	14 mm	85	8.5	61
22 mm	16 mm	130	13.0	94

EAS20340
ENGINE TIGHTENING TORQUES

Item	Thread size	Q'ty	Tightening torque	Remarks
Spark plugs	M10	4	13 Nm (1.3 m·kgf, 9.4 ft·lbf)	
Cylinder head nut	M10	2	See TIP.	E
Cylinder head nut	M10	8	See TIP.	E
Cylinder head bolt	M6	2	12 Nm (1.2 m·kgf, 8.7 ft·lbf)	
Camshaft cap bolt	M6	20	10 Nm (1.0 m·kgf, 7.2 ft·lbf)	E
Cylinder head cover bolt	M6	6	10 Nm (1.0 m·kgf, 7.2 ft·lbf)	
Cylinder head stud bolt (exhaust pipe)	M8	8	15 Nm (1.5 m·kgf, 11 ft·lbf)	
Read valve cover bolt (air induction system)	M6	4	10 Nm (1.0 m·kgf, 7.2 ft·lbf)	LT
Camshaft sprocket bolt	M7	4	24 Nm (2.4 m·kgf, 17 ft·lbf)	
Throttle body joint bolt	M6	7	10 Nm (1.0 m·kgf, 7.2 ft·lbf)	LT
Oil checking bolt	M6	1	10 Nm (1.0 m·kgf, 7.2 ft·lbf)	
Connecting rod bolt	M8	8	See TIP.	M
Generator rotor bolt	M12	1	70 Nm (7.0 m·kgf, 50 ft·lbf)	E
Pickup rotor bolt	M10	1	60 Nm (6.0 m·kgf, 43 ft·lbf)	E
Timing chain tensioner bolt	M6	2	10 Nm (1.0 m·kgf, 7.2 ft·lbf)	
Water pump outlet pipe bolt	M6	1	10 Nm (1.0 m·kgf, 7.2 ft·lbf)	LT
Radiator inlet pipe bolt	M6	2	10 Nm (1.0 m·kgf, 7.2 ft·lbf)	
Water pump inlet pipe bolt (water pump side)	M6	1	10 Nm (1.0 m·kgf, 7.2 ft·lbf)	LT
Water pump inlet pipe bolt (front side)	M6	1	10 Nm (1.0 m·kgf, 7.2 ft·lbf)	LT
Water hose clamp	—	6	2 Nm (0.2 m·kgf, 1.4 ft·lbf)	
Oil/water pump driven sprocket bolt	M6	1	15 Nm (1.5 m·kgf, 11 ft·lbf)	
Oil/water pump assembly bolt	M6	2	12 Nm (1.2 m·kgf, 8.7 ft·lbf)	LT
Thermostat housing cover nut	M6	2	10 Nm (1.0 m·kgf, 7.2 ft·lbf)	
Thermostat inlet pipe bolt	M6	1	10 Nm (1.0 m·kgf, 7.2 ft·lbf)	LT
Oil cooler union bolt	M20	1	63 Nm (6.3 m·kgf, 45 ft·lbf)	E
Engine oil drain bolt	M14	1	43 Nm (4.3 m·kgf, 31 ft·lbf)	
Oil pipe bolt	M6	2	10 Nm (1.0 m·kgf, 7.2 ft·lbf)	LT
Oil strainer bolt	M6	3	10 Nm (1.0 m·kgf, 7.2 ft·lbf)	LT
Oil/water pump assembly drive chain guide bolt	M6	2	10 Nm (1.0 m·kgf, 7.2 ft·lbf)	LT
Oil delivery pipe 1 bolt	M6	1	10 Nm (1.0 m·kgf, 7.2 ft·lbf)	LT
Oil delivery pipe 2 bolt	M6	1	10 Nm (1.0 m·kgf, 7.2 ft·lbf)	LT
Oil filter union bolt	M20	1	80 Nm (8.0 m·kgf, 58 ft·lbf)	
Oil filter cartridge	M20	1	17 Nm (1.7 m·kgf, 12 ft·lbf)	LS
Oil pan bolt	M6	13	10 Nm (1.0 m·kgf, 7.2 ft·lbf)	
Relief valve assembly bolt	M6	2	10 Nm (1.0 m·kgf, 7.2 ft·lbf)	LT
Throttle cable adjusting bolt	M6	2	5 Nm (0.5 m·kgf, 3.6 ft·lbf)	

Item	Thread size	Q'ty	Tightening torque	Remarks
Throttle body and throttle body joint clamp	M5	4	3 Nm (0.3 m·kgf, 2.2 ft·lbf)	
Throttle position sensor screw	M5	2	3.5 Nm (0.35 m·kgf, 2.5 ft·lbf)	
Accelerator position sensor screw	M5	2	3.5 Nm (0.35 m·kgf, 2.5 ft·lbf)	
Intake funnel joint bolt	M6	6	8 Nm (0.8 m·kgf, 5.8 ft·lbf)	
Air filter case screw	M5	10	2 Nm (0.2 m·kgf, 1.4 ft·lbf)	
Exhaust pipe nut	M8	8	20 Nm (2.0 m·kgf, 14 ft·lbf)	
Exhaust chamber and muffler clamp bolt	M8	2	20 Nm (2.0 m·kgf, 14 ft·lbf)	
Exhaust pipe and exhaust stay bolt	M8	1	20 Nm (2.0 m·kgf, 14 ft·lbf)	
Exhaust chamber bracket bolt	M8	1	20 Nm (2.0 m·kgf, 14 ft·lbf)	
Exhaust chamber bolt	M8	1	20 Nm (2.0 m·kgf, 14 ft·lbf)	
Exhaust pipe and exhaust chamber clamp bolt	M6	1	10 Nm (1.0 m·kgf, 7.2 ft·lbf)	
Muffler and frame bolt	M8	2	23 Nm (2.3 m·kgf, 17 ft·lbf)	
Muffler cover bolt	M6	4	10 Nm (1.0 m·kgf, 7.2 ft·lbf)	
Exhaust chamber protector bolt	M6	4	7 Nm (0.7 m·kgf, 5.1 ft·lbf)	
Muffler pipe cover bolt	M6	4	7 Nm (0.7 m·kgf, 5.1 ft·lbf)	
Crankcase stud bolt	M10	10	8 Nm (0.8 m·kgf, 5.8 ft·lbf)	E
Crankcase bolt (main journal)	M9	10	See TIP.	l=100 mm (3.94 in) E
Crankcase bolt	M8	8	24 Nm (2.4 m·kgf, 17 ft·lbf)	l=60 mm (2.36 in) E
Crankcase bolt	M8	2	24 Nm (2.4 m·kgf, 17 ft·lbf)	l=60 mm (2.36 in) E
Crankcase bolt	M6	2	10 Nm (1.0 m·kgf, 7.2 ft·lbf)	l=65 mm (2.56 in) E
Crankcase bolt	M6	1	10 Nm (1.0 m·kgf, 7.2 ft·lbf)	l=70 mm (2.76 in) E LT
Crankcase bolt	M6	6	10 Nm (1.0 m·kgf, 7.2 ft·lbf)	l=60 mm (2.36 in) E
Crankcase bolt	M6	7	10 Nm (1.0 m·kgf, 7.2 ft·lbf)	l=50 mm (1.97 in) E
Crankcase bolt	M6	4	10 Nm (1.0 m·kgf, 7.2 ft·lbf)	l=40 mm (1.57 in) E
Generator rotor cover bolt	M6	8	12 Nm (1.2 m·kgf, 8.7 ft·lbf)	
Drive sprocket cover bolt	M6	3	10 Nm (1.0 m·kgf, 7.2 ft·lbf)	LT

Item	Thread size	Q'ty	Tightening torque	Remarks
Clutch cover bolt	M6	8	12 Nm (1.2 m·kgf, 8.7 ft·lbf)	
Clutch cover bolt	M6	1	12 Nm (1.2 m·kgf, 8.7 ft·lbf)	LT
Pickup rotor cover 2 bolt	M6	6	12 Nm (1.2 m·kgf, 8.7 ft·lbf)	
Crankcase breather case bolt	M6	6	12 Nm (1.2 m·kgf, 8.7 ft·lbf)	
Oil baffle plate bolt	M6	4	10 Nm (1.0 m·kgf, 7.2 ft·lbf)	LT
Crankcase breather cover bolt	M6	2	10 Nm (1.0 m·kgf, 7.2 ft·lbf)	LT
Pull lever shaft protector bolt	M6	2	7 Nm (0.7 m·kgf, 5.1 ft·lbf)	LT
Timing check bolt	M8	1	15 Nm (1.5 m·kgf, 11 ft·lbf)	
Engine oil filler cap	M20	1	1.5 Nm (0.15 m·kgf, 1.1 ft·lbf)	
Main gallery plug 1	M16	2	8 Nm (0.8 m·kgf, 5.8 ft·lbf)	
Main gallery plug 2	M20	1	8 Nm (0.8 m·kgf, 5.8 ft·lbf)	
Clutch cable holder bolt	M6	2	10 Nm (1.0 m·kgf, 7.2 ft·lbf)	LT
Main gallery plug (oil return)	M12	1	24 Nm (2.4 m·kgf, 17 ft·lbf)	LT
Stator coil lead holder bolt	M6	1	10 Nm (1.0 m·kgf, 7.2 ft·lbf)	LT
Stator coil assembly bolt	M6	3	14 Nm (1.4 m·kgf, 10 ft·lbf)	LT
Crankcase baffle plate bolt	M6	10	10 Nm (1.0 m·kgf, 7.2 ft·lbf)	LT
Pickup rotor cover 1 bolt	M6	4	7 Nm (0.7 m·kgf, 5.1 ft·lbf)	LT
Right side cowling inner panel bracket bolt	M6	1	10 Nm (1.0 m·kgf, 7.2 ft·lbf)	LT
Idler gear bolt	M6	1	10 Nm (1.0 m·kgf, 7.2 ft·lbf)	
Starter clutch holder bolt	M6	3	14 Nm (1.4 m·kgf, 10 ft·lbf)	LT
Clutch boss nut	M20	1	115 Nm (11.5 m·kgf, 85 ft·lbf)	Stake E
Clutch spring bolt	M6	6	10 Nm (1.0 m·kgf, 7.2 ft·lbf)	
Drive sprocket nut	M22	1	85 Nm (8.5 m·kgf, 61 ft·lbf)	Stake LT
Bearing housing bolt	M6	3	12 Nm (1.2 m·kgf, 8.7 ft·lbf)	LT
Shift drum retainer bolt	M6	2	10 Nm (1.0 m·kgf, 7.2 ft·lbf)	LT
Stopper screw	M8	1	22 Nm (2.2 m·kgf, 16 ft·lbf)	LT
Shift rod nut	M6	1	7 Nm (0.7 m·kgf, 5.1 ft·lbf)	Left thread
Shift rod nut	M6	1	7 Nm (0.7 m·kgf, 5.1 ft·lbf)	
Joint rod bolt	M6	1	10 Nm (1.0 m·kgf, 7.2 ft·lbf)	LT
Shift arm bolt	M6	1	10 Nm (1.0 m·kgf, 7.2 ft·lbf)	
ECU (engine control unit) screw	M6	2	7 Nm (0.7 m·kgf, 5.1 ft·lbf)	
Neutral switch bolt	M5	2	5 Nm (0.5 m·kgf, 3.6 ft·lbf)	LT
Coolant temperature sensor	M12	1	18 Nm (1.8 m·kgf, 13 ft·lbf)	
Cylinder identification sensor bolt	M6	1	8 Nm (0.8 m·kgf, 5.8 ft·lbf)	LT
Atmospheric pressure sensor bolt	M5	1	1.5 Nm (0.15 m·kgf, 1.1 ft·lbf)	
Intake air pressure sensor screw	M5	1	3.5 Nm (0.35 m·kgf, 2.5 ft·lbf)	
Crankshaft position sensor bolt	M6	2	10 Nm (1.0 m·kgf, 7.2 ft·lbf)	LT
Oil level switch bolt	M6	2	10 Nm (1.0 m·kgf, 7.2 ft·lbf)	
Starter motor bolt	M6	2	12 Nm (1.2 m·kgf, 8.7 ft·lbf)	

Item	Thread size	Q'ty	Tightening torque	Remarks
Speed sensor bolt	M6	1	10 Nm (1.0 m·kgf, 7.2 ft·lbf)	

TIP

Cylinder head nut

Use new nuts and washers.

1. Apply engine oil to bolt thread and mating surface.
2. Tighten the bolt to 10 Nm (1.0 m·kgf, 7.2 ft·lbf).
3. Tighten the bolt to 25 Nm (2.5 m·kgf, 18 ft·lbf).
4. Tighten the bolts 1–7 and 10 to 115°–125° and bolts 8 and 9 to 130°–140°.

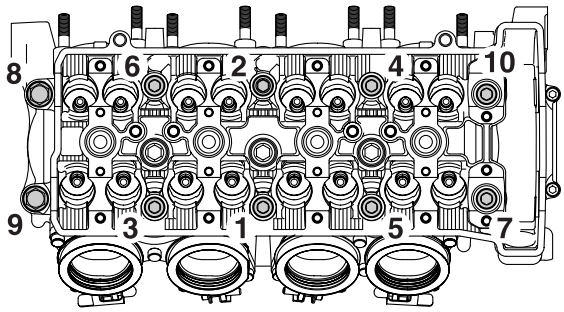

TIP

Connecting rod cap bolt

Use new bolts.

1. Apply Molybdenum-disulfide grease to bolt thread and cap/nut mating surface.
2. Tighten the bolt to 20 Nm (2.0 m·kgf, 14 ft·lbf).
3. Retighten the bolt further to reach the specified angle of 145°–155°.

TIP

Crankcase bolt (main journal)

1. Lubricate the bolts thread, mating surfaces and washers with engine oil.
2. First, tighten the bolts to approximately 30 Nm (3.0 m·kgf, 22 ft·lbf) with a torque wrench.
3. Loosen all the bolts one by one following the tightening order and then tighten them to 18 Nm (1.8 m·kgf, 13 ft·lbf) again.
4. Retighten the bolts further to reach the specified angle of 60°.

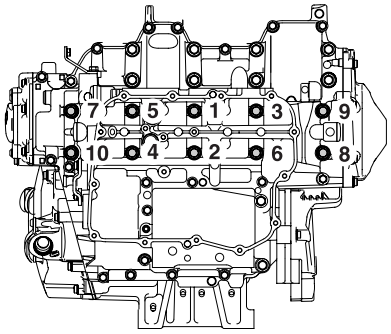

EAS20350
CHASSIS TIGHTENING TORQUES

Item	Thread size	Q'ty	Tightening torque	Remarks
Engine mounting bolt (front side)	M12	2	70 Nm (7.0 m·kgf, 50 ft·lbf)	
Engine mounting nut (rear side)	M10	2	51 Nm (5.1 m·kgf, 37 ft·lbf)	LS
Engine mount adjusting bolt	M18	2	7 Nm (0.7 m·kgf, 5.1 ft·lbf)	
Clutch cable locknut (engine side)	M8	1	7 Nm (0.7 m·kgf, 5.1 ft·lbf)	
Clutch lever holder bolt	M6	1	11 Nm (1.1 m·kgf, 8.0 ft·lbf)	
Main frame and rear frame bolt	M10	4	41 Nm (4.1 m·kgf, 30 ft·lbf)	LT
Battery cover bolt	M6	2	7 Nm (0.7 m·kgf, 5.1 ft·lbf)	
Upper tail cover bracket bolt	M6	4	7 Nm (0.7 m·kgf, 5.1 ft·lbf)	
Swingarm pivot shaft	M30	1	7 Nm (0.7 m·kgf, 5.1 ft·lbf)	LS
Swingarm pivot shaft ring nut	M30	1	65 Nm (6.5 m·kgf, 47 ft·lbf)	
Swingarm pivot shaft nut	M20	1	105 Nm (10.5 m·kgf, 75 ft·lbf)	
Relay arm and frame nut	M10	1	40 Nm (4.0 m·kgf, 29 ft·lbf)	
Relay arm and connecting arm nut	M10	1	40 Nm (4.0 m·kgf, 29 ft·lbf)	
Connecting arm and swingarm nut	M10	1	40 Nm (4.0 m·kgf, 29 ft·lbf)	
Rear shock absorber assembly lower nut	M10	1	40 Nm (4.0 m·kgf, 29 ft·lbf)	
Rear shock absorber assembly and bracket nut	M10	1	40 Nm (4.0 m·kgf, 29 ft·lbf)	
Rear shock absorber assembly bracket and frame nut	M16	1	92 Nm (9.2 m·kgf, 66 ft·lbf)	
Drive chain guide bolt	M6	2	7 Nm (0.7 m·kgf, 5.1 ft·lbf)	
Drive chain guard bolt	M6	2	7 Nm (0.7 m·kgf, 5.1 ft·lbf)	
Locknut (drive chain adjusting nut)	M8	2	16 Nm (1.6 m·kgf, 11 ft·lbf)	
Upper bracket pinch bolt	M8	2	26 Nm (2.6 m·kgf, 19 ft·lbf)	
Steering stem nut	M28	1	113 Nm (11.3 m·kgf, 82 ft·lbf)	
Handlebar pinch bolt	M8	2	16 Nm (1.6 m·kgf, 11 ft·lbf)	
Handlebar bolt	M6	2	13 Nm (1.3 m·kgf, 9.4 ft·lbf)	
Lower bracket ring nut	M30	2	See TIP.	
Lower bracket pinch bolt	M8	4	23 Nm (2.3 m·kgf, 17 ft·lbf)	See TIP.
Main switch bolt	M8	2	—	Bolt head to be cut off.
Damper rod assembly	M34	2	75 Nm (7.5 m·kgf, 54 ft·lbf)	
Cap bolt	M47	2	20 Nm (2.0 m·kgf, 14 ft·lbf)	
Brake master cylinder reservoir cap stopper screw	M4	1	1.2 Nm (0.12 m·kgf, 0.9 ft·lbf)	
Front brake hose union bolt	M10	3	30 Nm (3.0 m·kgf, 22 ft·lbf)	
Front brake hose holder bolt	M6	2	6 Nm (0.6 m·kgf, 4.3 ft·lbf)	
Front brake master cylinder holder bolt	M6	2	13 Nm (1.3 m·kgf, 9.4 ft·lbf)	

Item	Thread size	Q'ty	Tightening torque	Remarks
Handlebar end grip bolt	M6	2	4 Nm (0.4 m·kgf, 2.9 ft·lbf)	
Front brake hose joint bracket bolt	M6	2	11 Nm (1.1 m·kgf, 8.0 ft·lbf)	
Coolant reservoir bolt	M6	2	5 Nm (0.5 m·kgf, 3.6 ft·lbf)	
Air chamber bracket bolt	M6	4	7 Nm (0.7 m·kgf, 5.1 ft·lbf)	
Left lower cowling bracket bolt	M6	1	7 Nm (0.7 m·kgf, 5.1 ft·lbf)	
Left lower cowling bracket and radiator outlet pipe bolt	M6	1	7 Nm (0.7 m·kgf, 5.1 ft·lbf)	
Right lower cowling bracket bolt	M6	1	9 Nm (0.9 m·kgf, 6.5 ft·lbf)	LT
Left side cowling inner panel bolt	M6	1	5 Nm (0.5 m·kgf, 3.6 ft·lbf)	
Right side cowling inner panel bolt	M6	2	5 Nm (0.5 m·kgf, 3.6 ft·lbf)	
Meter bracket bolt	M8	2	23 Nm (2.3 m·kgf, 17 ft·lbf)	
Meter bracket ground lead bolt	M5	1	6 Nm (0.6 m·kgf, 4.3 ft·lbf)	
Rear view mirror nut	M6	4	7 Nm (0.7 m·kgf, 5.1 ft·lbf)	
Fuel pump bracket bolt	M5	6	4 Nm (0.4 m·kgf, 2.9 ft·lbf)	
Hose joint bolt	M5	1	4 Nm (0.4 m·kgf, 2.9 ft·lbf)	LT
Front fuel tank bracket bolt	M6	2	9 Nm (0.9 m·kgf, 6.5 ft·lbf)	
Fuel tank and front fuel tank bracket bolt	M6	2	9 Nm (0.9 m·kgf, 6.5 ft·lbf)	
Rear fuel tank bracket and rear frame bolt	M6	4	7 Nm (0.7 m·kgf, 5.1 ft·lbf)	
Fuel tank and rear fuel tank bracket bolt	M6	1	7 Nm (0.7 m·kgf, 5.1 ft·lbf)	
Fuel tank upper cover and frame bolt	M6	1	7 Nm (0.7 m·kgf, 5.1 ft·lbf)	
Fuel tank upper cover and fuel tank bolt (rear)	M5	2	4 Nm (0.4 m·kgf, 2.9 ft·lbf)	
Fuel tank upper cover and fuel tank bolt (side)	M6	2	7 Nm (0.7 m·kgf, 5.1 ft·lbf)	
Fuel tank side cover screw	M5	2	4 Nm (0.4 m·kgf, 2.9 ft·lbf)	
Rider seat bolt	M6	2	7 Nm (0.7 m·kgf, 5.1 ft·lbf)	
Seat lock plate bolt	M6	2	7 Nm (0.7 m·kgf, 5.1 ft·lbf)	
Front wheel axle bolt	M14	1	91 Nm (9.1 m·kgf, 66 ft·lbf)	
Rear wheel axle nut	M24	1	150 Nm (15 m·kgf, 110 ft·lbf)	
Front brake caliper bolt	M10	4	35 Nm (3.5 m·kgf, 25 ft·lbf)	LT
Rear brake caliper bolt (front side)	M12	1	27 Nm (2.7 m·kgf, 19 ft·lbf)	S
Rear brake caliper bolt (rear side)	M8	1	22 Nm (2.2 m·kgf, 16 ft·lbf)	S LT
Front brake disc bolt	M6	10	18 Nm (1.8 m·kgf, 13 ft·lbf)	LT
Rear brake disc bolt	M8	5	30 Nm (3.0 m·kgf, 22 ft·lbf)	LT
Rear wheel sprocket self-locking nut	M10	6	100 Nm (10 m·kgf, 72 ft·lbf)	
Bleed screw (caliper)	M8	2	5 Nm (0.5 m·kgf, 3.6 ft·lbf)	
Bleed screw (master cylinder)	M8	1	6 Nm (0.6 m·kgf, 4.3 ft·lbf)	

Item	Thread size	Q'ty	Tightening torque	Remarks
Front wheel axle pinch bolt	M8	4	21 Nm (2.1 m·kgf, 15 ft·lbf)	See TIP.
Rider footrest bolt	M8	4	28 Nm (2.8 m·kgf, 20 ft·lbf)	
Passenger footrest bolt	M8	4	28 Nm (2.8 m·kgf, 20 ft·lbf)	
Rear frame lower reinforcement and passenger footrest bolt	M6	2	13 Nm (1.3 m·kgf, 9.4 ft·lbf)	
Rear brake master cylinder bolt	M6	2	13 Nm (1.3 m·kgf, 9.4 ft·lbf)	
Rear brake hose union bolt	M10	2	30 Nm (3.0 m·kgf, 22 ft·lbf)	
Sidestand bracket bolt	M10	2	63 Nm (6.3 m·kgf, 45 ft·lbf)	
Battery box bolt	M6	2	7 Nm (0.7 m·kgf, 5.1 ft·lbf)	
Lean angle sensor bolt	M4	2	2 Nm (0.2 m·kgf, 1.4 ft·lbf)	
License plate/turn signal light stay bolt	M6	3	7 Nm (0.7 m·kgf, 5.1 ft·lbf)	
License plate/turn signal light bolt	M6	4	10 Nm (1.0 m·kgf, 7.2 ft·lbf)	
Exhaust chamber cover bolt	M6	2	7 Nm (0.7 m·kgf, 5.1 ft·lbf)	

TIP

Lower ring nut

1. First, tighten the lower ring nut approximately 52 Nm (5.2 m·kgf, 37 ft·lbf) by using the torque wrench, then loosen the ring nut completely.
2. Retighten the lower ring nut 18 Nm (1.8 m·kgf, 13 ft·lbf).

TIP

Lower bracket pinch bolt

Tighten each bolt to 23 Nm (2.3 m·kgf, 17 ft·lbf) in the order pinch bolt "1" → pinch bolt "2" → pinch bolt "1" → pinch bolt "2".

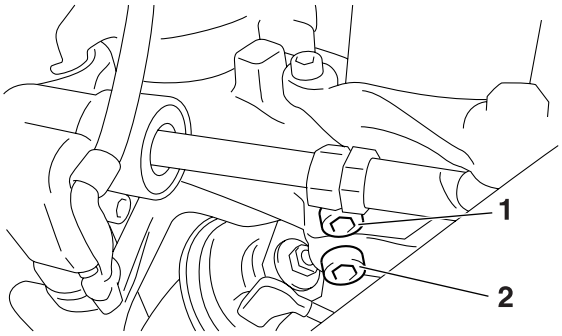

TIP

Front wheel axle pinch bolt

1. Insert the front wheel axle from the right side and tighten it with the flange bolt from the left side to 91 Nm (9.1 m·kgf, 66 ft·lbf).
2. In the order from the pinch bolt "2" → pinch bolt "1" → pinch bolt "2", tighten each bolt to 21 Nm (2.1 m·kgf, 15 ft·lbf) without performing temporary tightening.
3. Check that the end face of the axle head and the end face of the fork side are flush-mounted.
   If they are out of alignment, make sure to fit them by adding the external force by hand or with a plastic hammer, etc.
   If the end face of the axle is not parallel to the end face of the fork, align them so that one point of the axle circumference is positioned on the end face of the fork.

At this stage, it can be accepted if the end face of the axle becomes partially concave to the end face of the fork.

4. In the order from the pinch bolt “4” → pinch bolt “3” → pinch bolt “4”, tighten each bolt to 21 Nm (2.1 m·kgf, 15 ft·lbf) without performing temporary tightening.

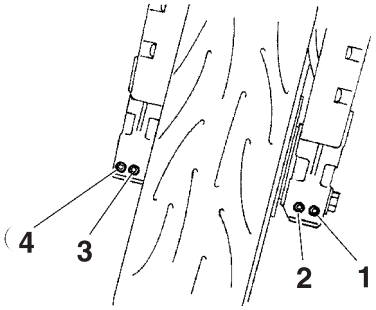

EAS20360
LUBRICATION POINTS AND LUBRICANT TYPES

EAS20370
ENGINE

Lubrication point	Lubricant
Oil seal lips	LS
O-rings	LS
Coolant hose insertion part	Silicon fluid
Bearings	E
Camshaft lobes and journals (intake and exhaust)	M
Valve stem seal (installed on valve guide)	Silicon fluid
Valve lifter outer surface (intake and exhaust)	E
Valve stems and stem ends (intake and exhaust)	M
Connecting rod big end bearings and connecting rod big end thrust surface	E
Piston surfaces	E
Piston pins	E
Connecting rod bolts	M
Crankshaft journals	E
Balancer journals	E
Generator rotor bolt thread and washer	E
Crankshaft sprocket bolt thread	E
Balancer gear press fitting surface	E
O-rings (coolant pipe)	LS
Oil pump rotors (inner and outer)	Shell Alvania EP Grease®
Oil cooler bolt thread and washer	E
O-ring (oil nozzle)	LS
O-ring (main gallery plug)	LS
Idler gear and idler gear shaft	E
Starter clutch assembly	E
Starter clutch gear thrust surface	E
Primary driven gear	E
Clutch boss nut thread and bearing surface	E
Pull rod	LS
Oil/water pump assembly drive sprocket inner surface	E
Oil/water pump assembly drive sprocket collar and washer	E
Transmission gears (wheel and pinion)	M
Main axle and drive axle	M
Shift forks and shift fork guide bars	E
Cylinder head cover mating surface	Three bond No.1541C®
Cylinder head cover semicircular	Yamaha bond No.1215 (Three bond No.1215®)

Lubrication point	Lubricant
Crankcase mating surface	Yamaha bond No.1215 (Three bond No.1215®)
Crankcase cover (lead grommet)	Yamaha bond No.1215 (Three bond No.1215®)

EAS20380
CHASSIS

Lubrication point	Lubricant
Steering bearings and bearing races (upper and lower)	LS
Throttle grip inner surface and throttle cable end	LS
Brake lever pivoting point and metal-to-metal moving parts	S
Clutch lever pivoting point and metal-to-metal moving parts	LS
Clutch cable end	LS
Engine mounting bolts (rear upper and lower side)	LS
Relay arm, connecting arm and rear shock absorber spacer	LS
Swingarm pivot shaft	LS
Swingarm pivot shaft bearings	LS
Swingarm dust cover lips	LS
Relay arm, connecting arm and rear shock absorber oil seal lips	LS
Seat lock lever pivoting point	LS
Sidestand pivoting point and metal-to-metal moving parts	LS
Sidestand switch striker and sidestand switch contact point	LS
Sidestand hook and spring	LS
Sidestand bracket and sidestand bolt	LS
Shift shaft joint	LS
Front wheel oil seal lips	LS
Front axle shaft	LS
Rear wheel oil seal lips	LS
Rear wheel drive hub oil seal lips	LS
Rear wheel drive hub mating surface	LS

EAS20390
LUBRICATION SYSTEM CHART AND DIAGRAMS

EAS20400
ENGINE OIL LUBRICATION CHART

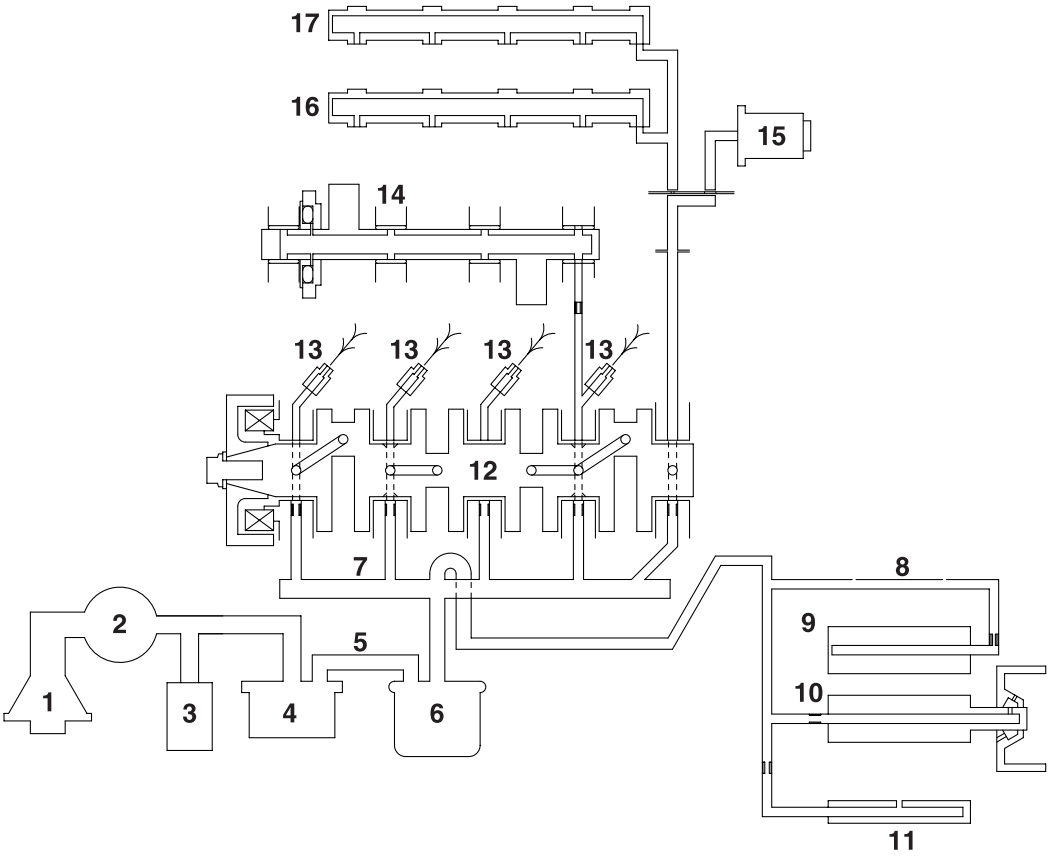

1. Oil strainer
2. Oil pump
3. Relief valve
4. Oil cooler
5. Sub gallery
6. Oil filter cartridge
7. Main gallery
8. Mission shower
9. Drive axle
10. Main axle
11. Shift fork (upper)
12. Crankshaft
13. Oil nozzle
14. Balancer shaft
15. Timing chain tensioner
16. Intake camshaft
17. Exhaust camshaft

EAS20410
LUBRICATION DIAGRAMS

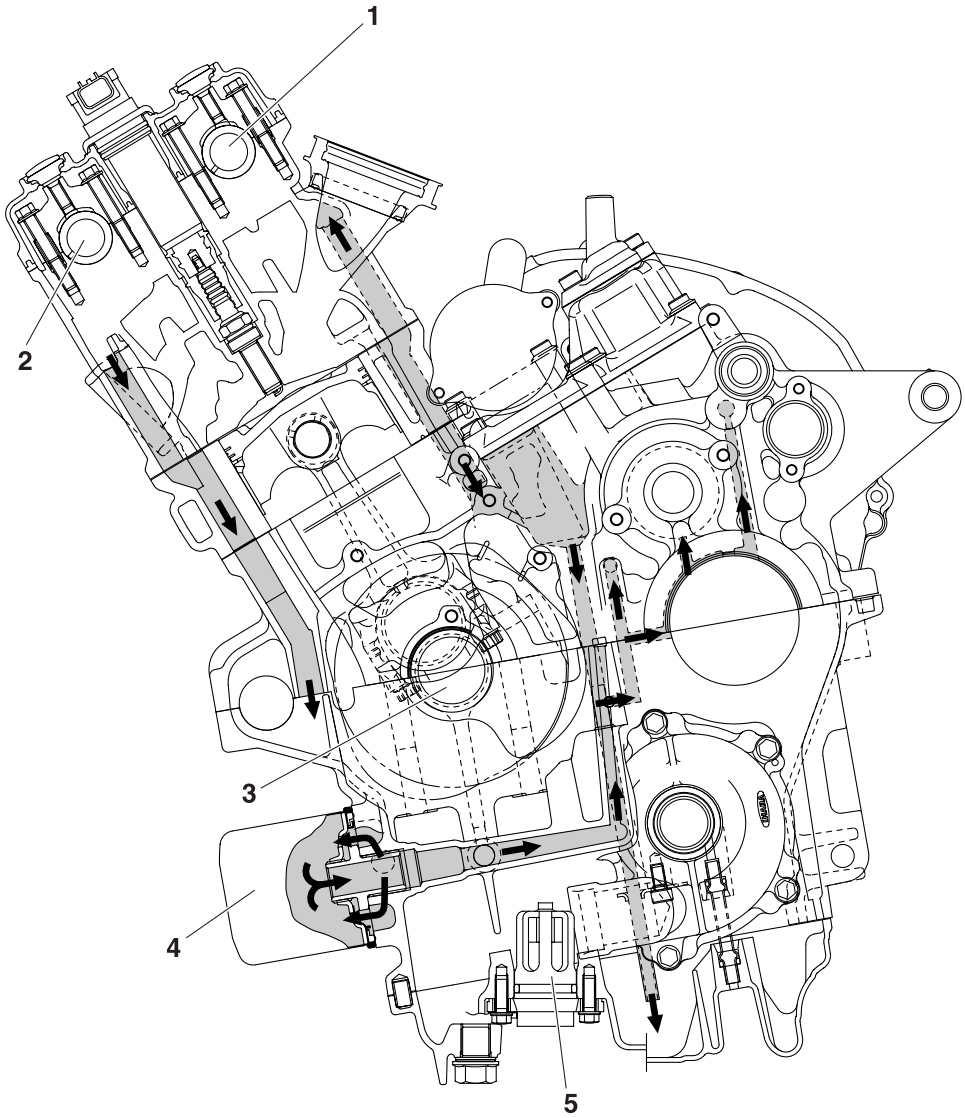

1. Intake camshaft
2. Exhaust camshaft
3. Crankshaft
4. Oil filter cartridge
5. Oil level switch

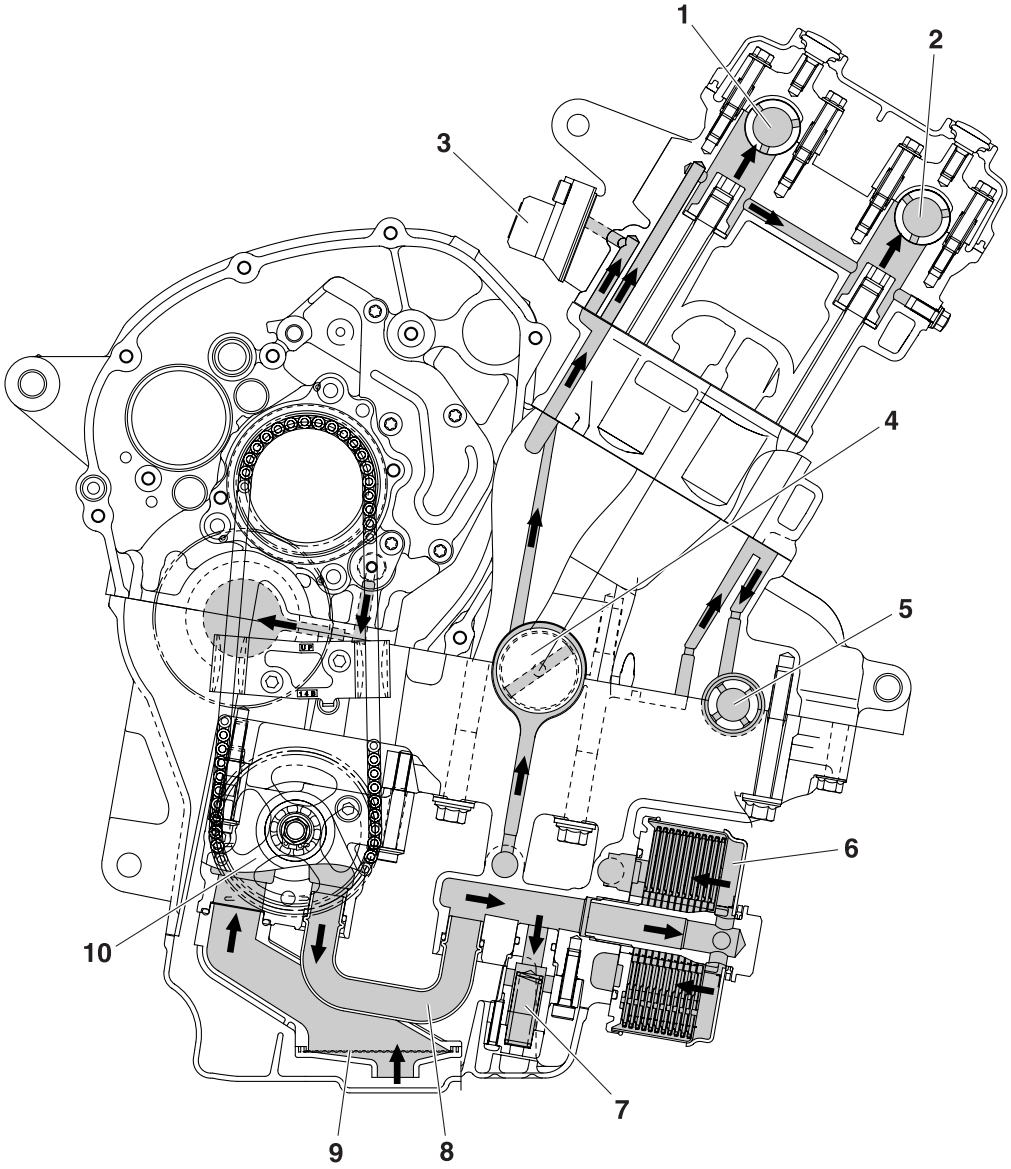
1
2
3
4
5
6
7
8
9
10

1. Intake camshaft
2. Exhaust camshaft
3. Timing chain tensioner
4. Crankshaft
5. Balancer shaft
6. Oil cooler
7. Relief valve
8. Oil pipe
9. Oil strainer
10. Oil/water pump assembly

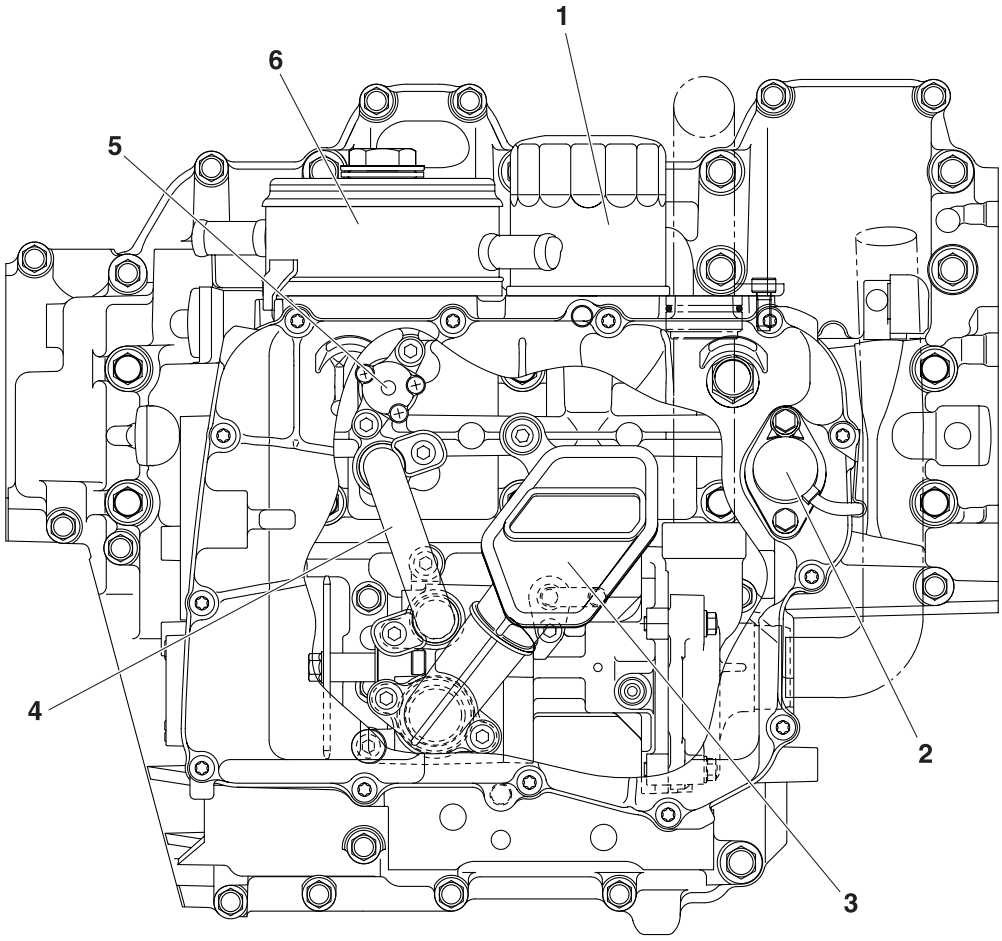
1
6
5
4
2
3

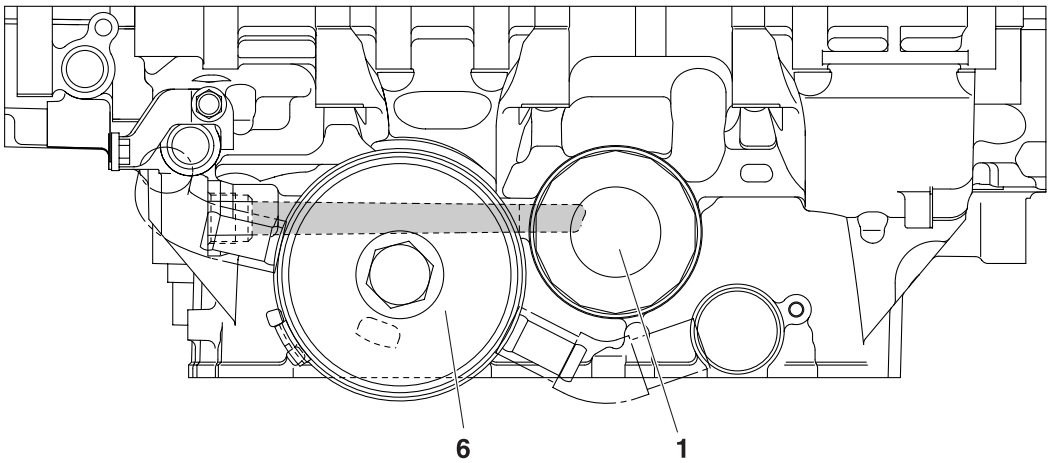
6
1

1. Oil filter cartridge
2. Oil level switch
3. Oil strainer
4. Oil pipe
5. Relief valve
6. Oil cooler

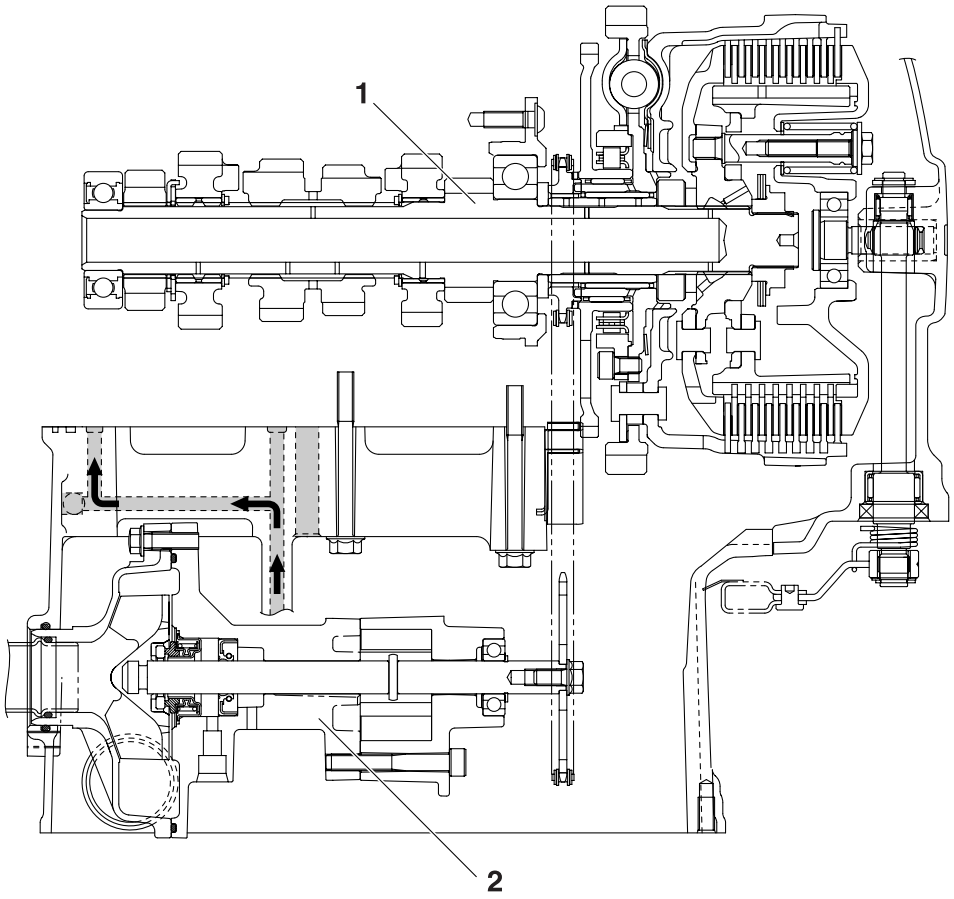
1
2

1. Main axle
2. Oil/water pump assembly

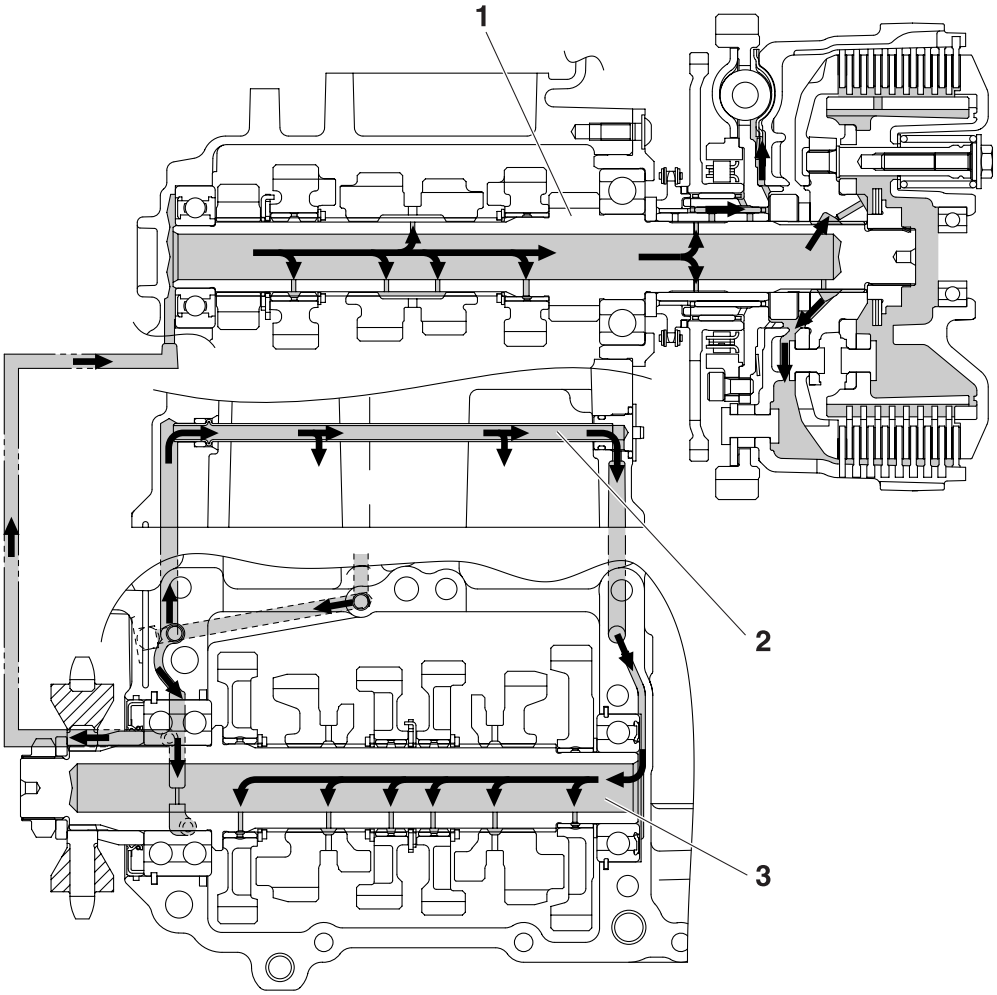
1
2
3

1. Main axle
2. Oil delivery pipe 2
3. Drive axle

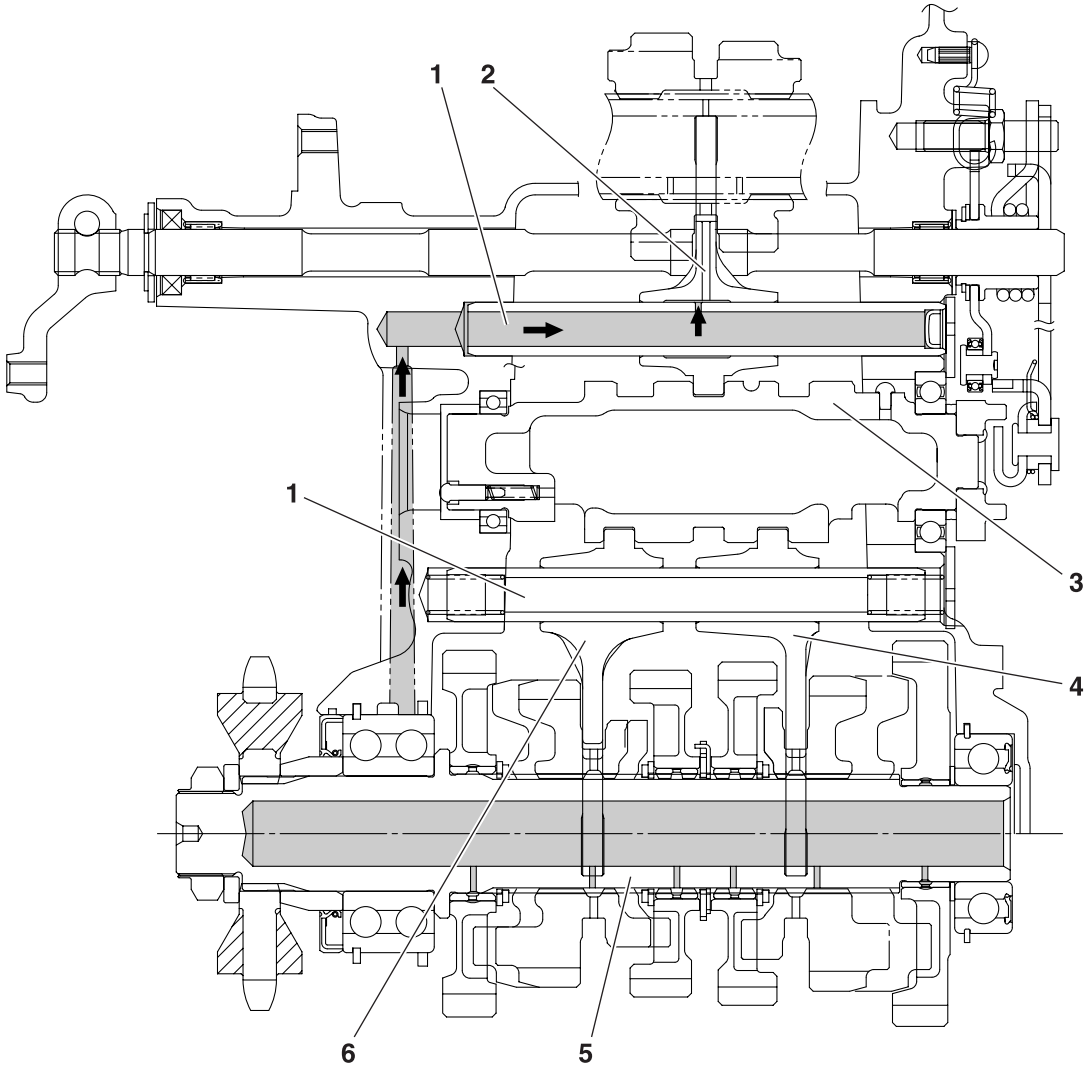
1
2
1
3
4
6
5

1. Shift fork guide bar
2. Shift fork-C
3. Shift drum assembly
4. Shift fork-R
5. Drive axle
6. Shift fork-L

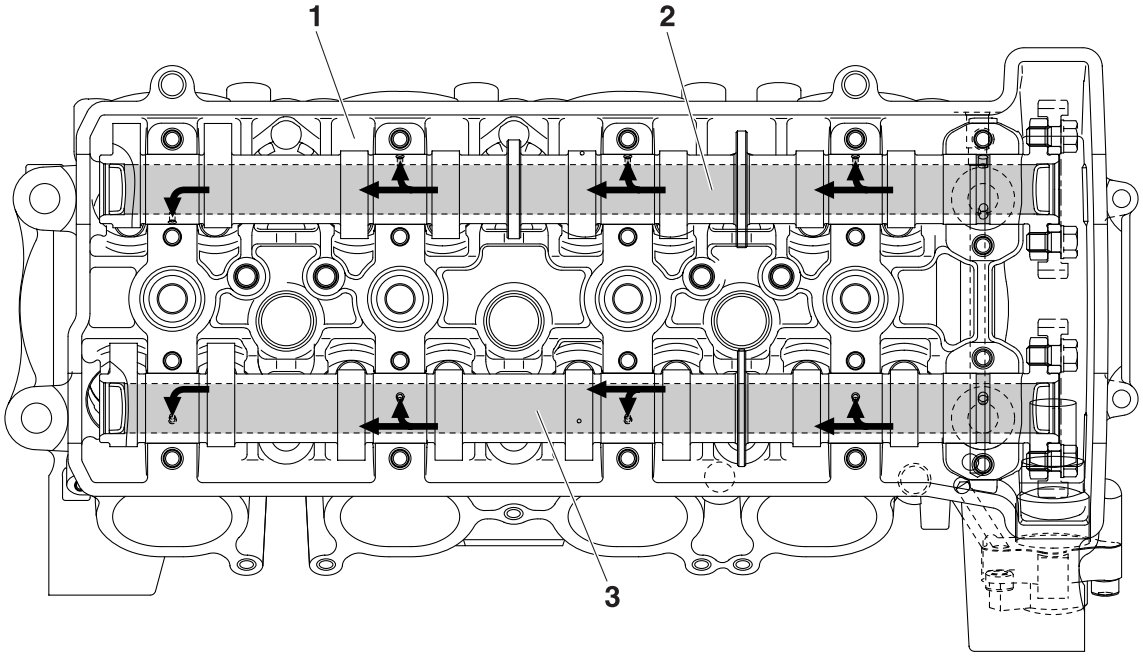
1
2
3

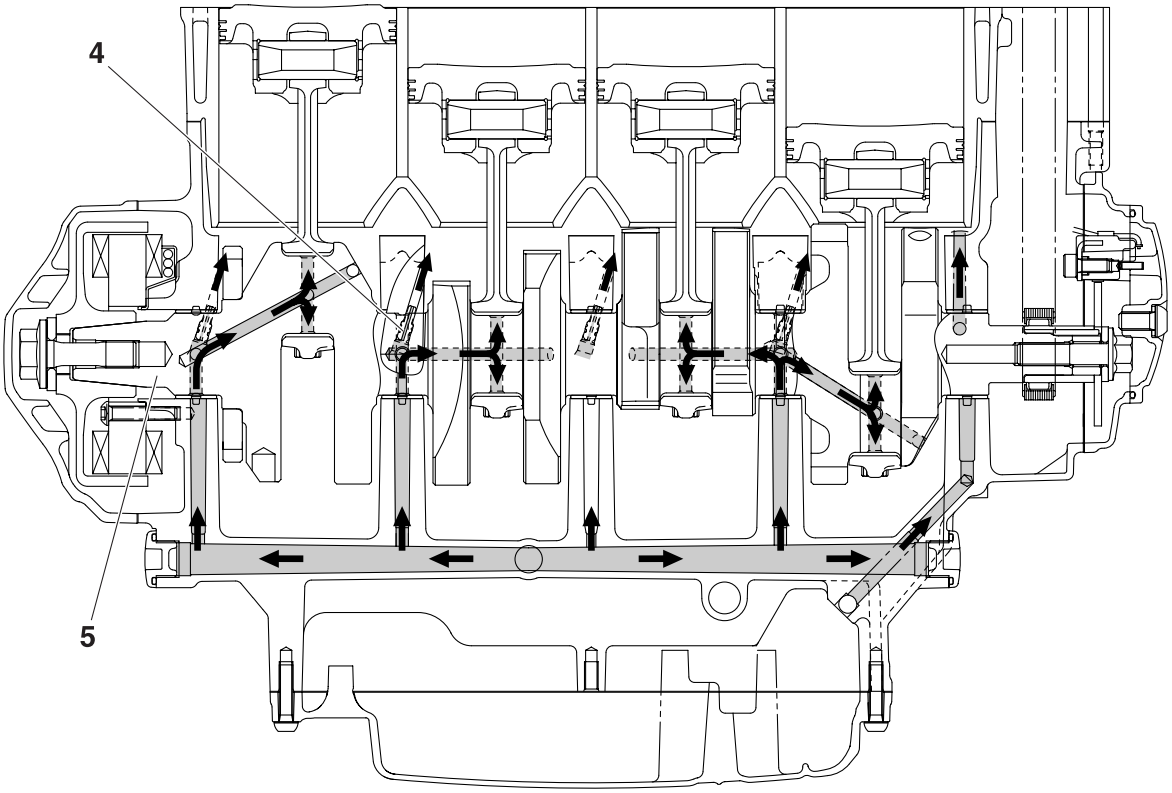
4
5

1. Cylinder head
2. Exhaust camshaft
3. Intake camshaft
4. Oil nozzle
5. Crankshaft

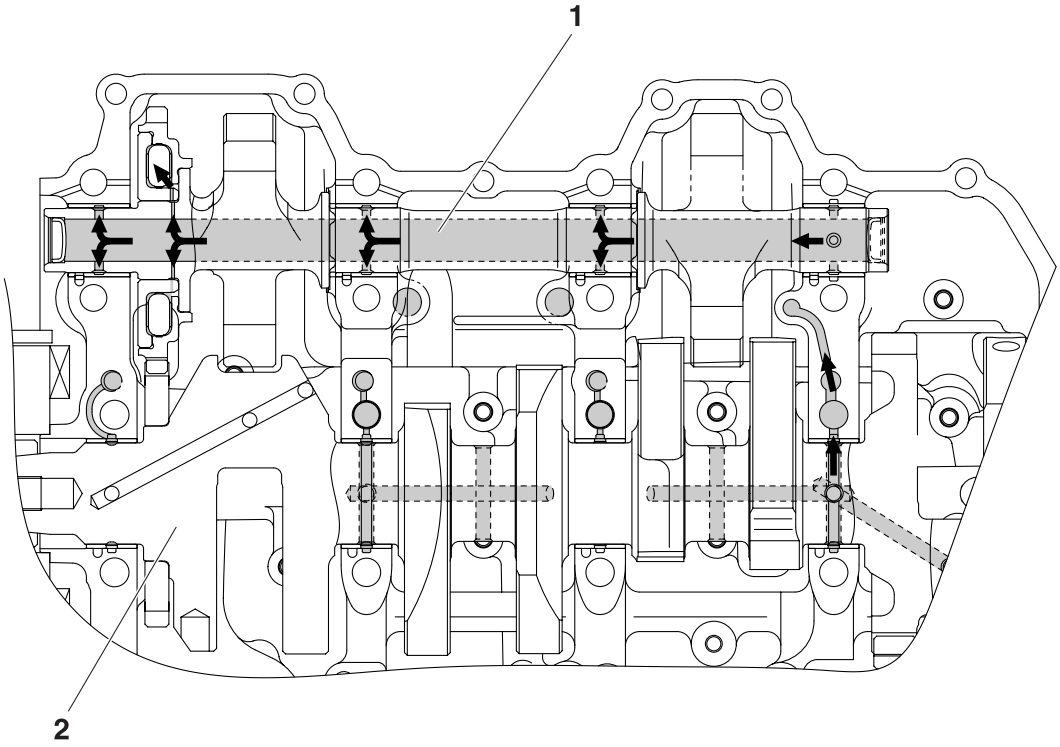
1
2

1. Balancer shaft
2. Crankshaft

EAS20420
COOLING SYSTEM DIAGRAMS

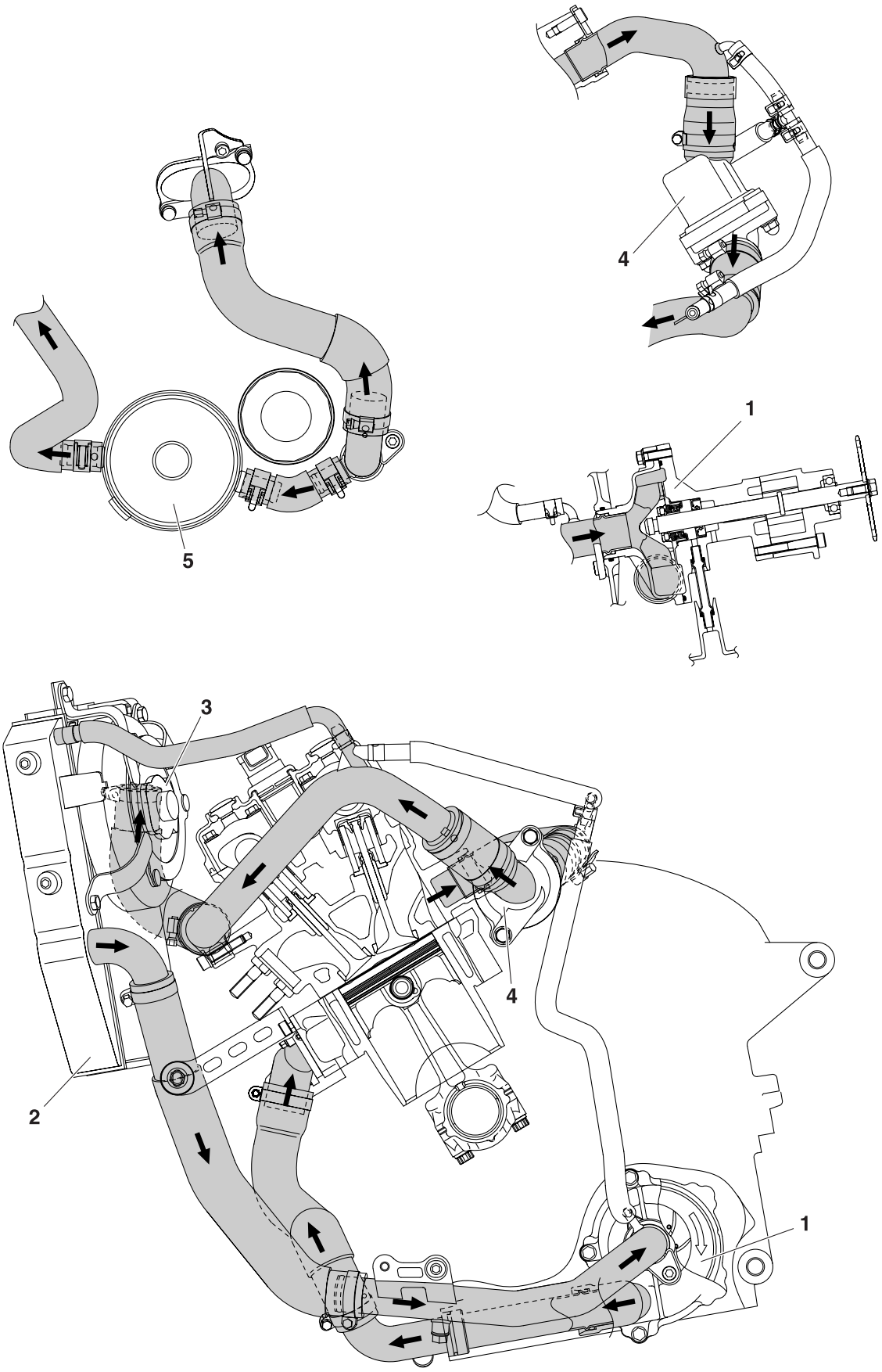

1. Oil/water pump assembly
2. Radiator
3. Radiator fan
4. Thermostat
5. Oil cooler

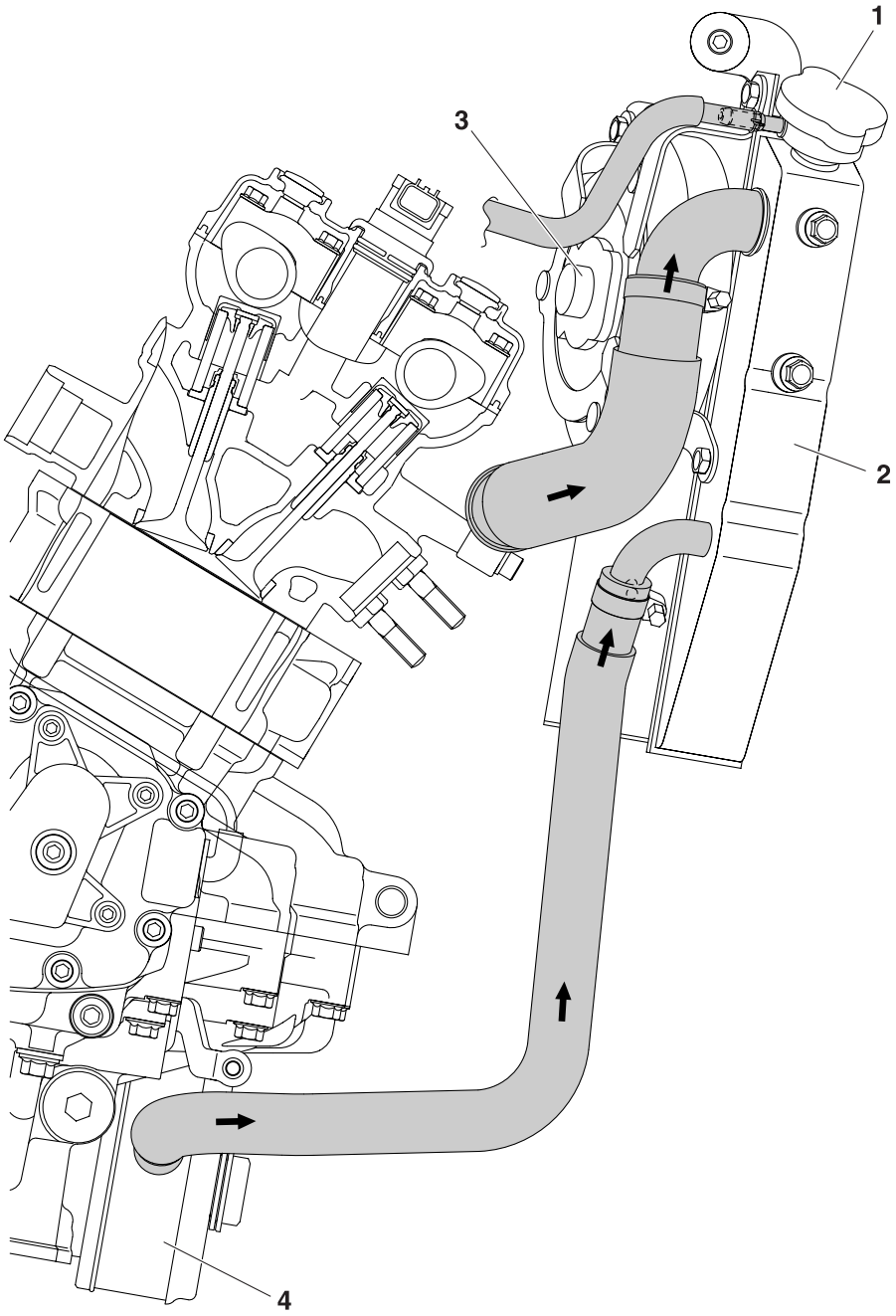
1
2
3
4

1. Radiator cap
2. Radiator
3. Radiator fan
4. Oil cooler

EAS20430
CABLE ROUTING

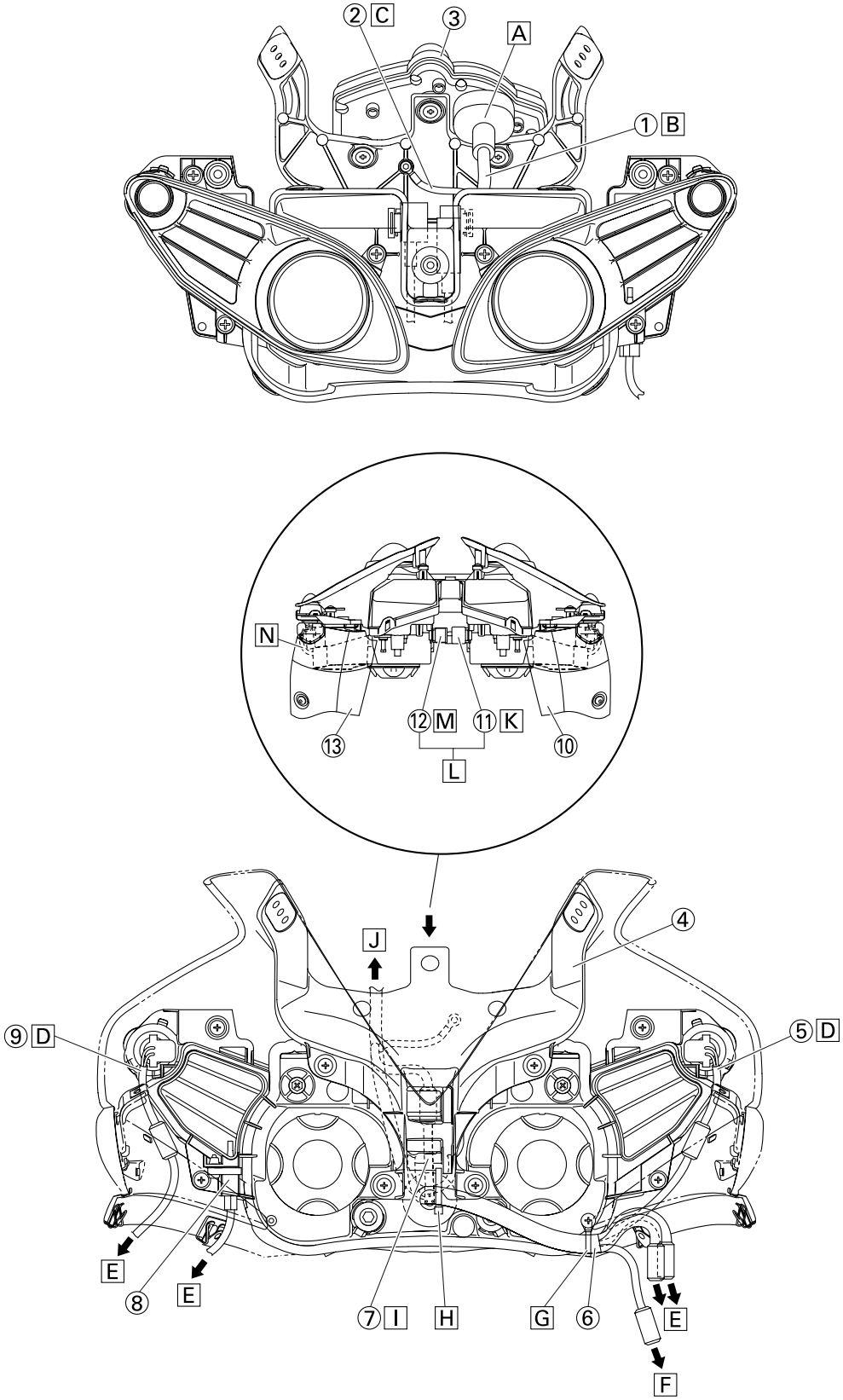

1. Meter lead
2. Ground lead
3. Meter
4. Meter bracket
5. Right auxiliary light lead
6. Headlight sub-wire harness
7. Headlight lead
8. Intake air temperature sensor
9. Left auxiliary light lead
10. Right air intake air duct cover
11. Turn signal relay
12. Headlight relay
13. Left air intake air duct cover

A. Make sure to insert the coupler and boots into the meter. Edge of the boots should not turn inward/outward.
B. The meter lead should not protrude out.
C. The ground lead should not protrude out. The ground lead terminal can be in any side.
D. Route the auxiliary light lead under the front intake air duct and connect.
E. To the main harness
F. To the turn signal
G. Cut off the excess end of the clamp.
H. When clamping the headlight sub-wire harness, it should not be sagged. Face the end of the clamp to front.
I. Route the headlight lead toward the front of the meter bracket and connect.
J. To the meter
K. Fix the turn signal relay by inserting it all the way in to the headlight right rib.
L. The turn signal relay and headlight relay can be installed either right/left.
M. Secure the headlight relay by inserting it all the way in to the headlight left rib.
N. The auxiliary light lead should not be pinched when installing the air intake air duct cover. Fit it inside of the console panel.

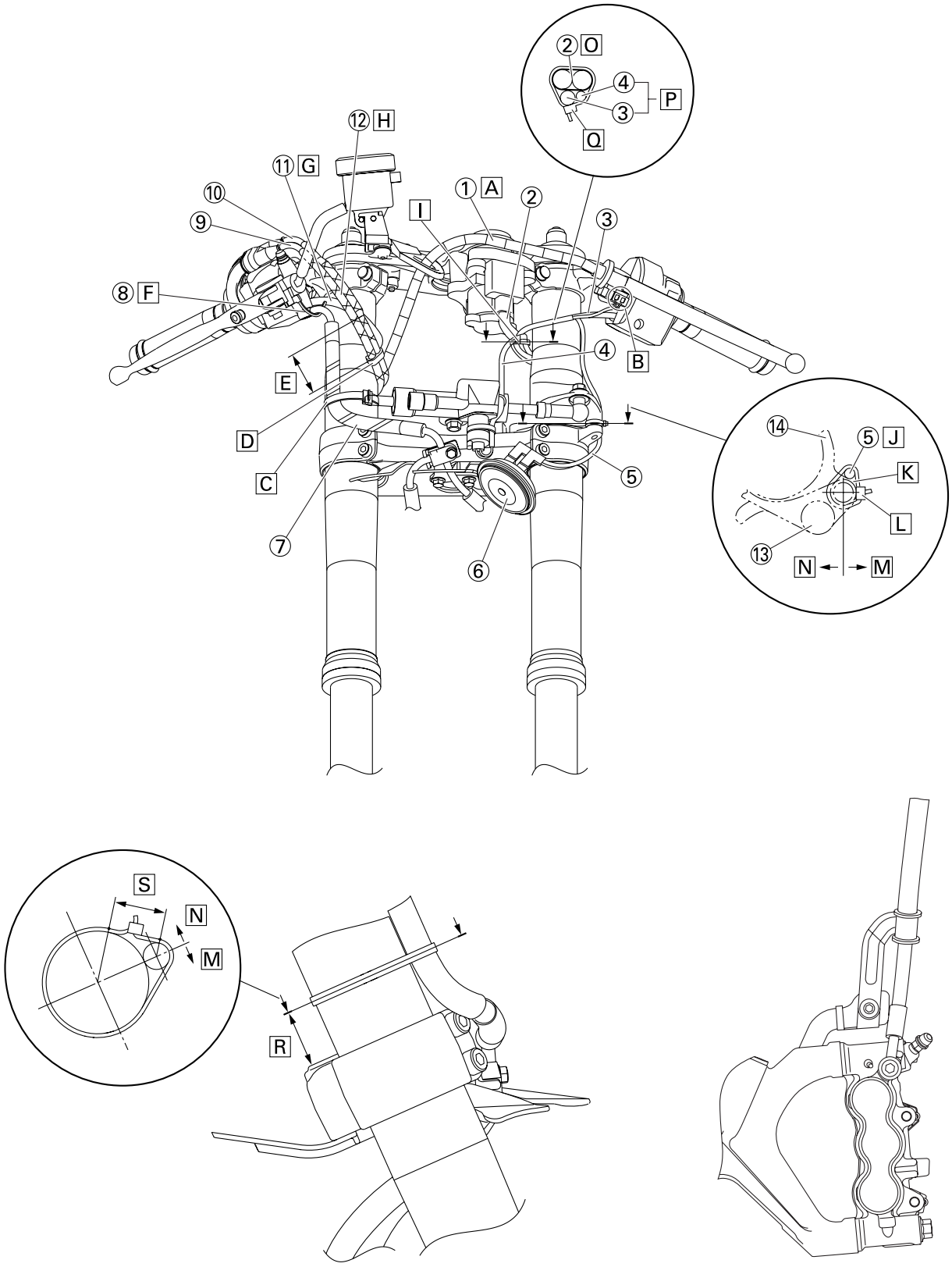
2 O
4
3
P
Q
12 H
11 G
10
9
8 F
1 A
2
I
3
4
B
E
D
C
7
6
5
14
5 J
K
L
13
N
M
S
N
M
R

1. Clutch cable
2. Main switch lead
3. Left handlebar switch lead
4. Steering damper lead
5. Horn lead
6. Horn
7. Brake hose
8. Front brake light switch lead
9. Throttle cable (decelerator cable)
10. Throttle cable (accelerator cable)
11. Right handlebar switch lead
12. Throttle cable
13. Steering damper bracket
14. Lower bracket

A. After passing the clutch cable through the clutch cable guide, route it along and front of the main switch.
B. Route the clutch switch lead outside of the left handlebar switch lead.
C. Fasten the brake hose with the outer tube of the front fork.
D. The clamp should be above the front brake hose. The throttle cable (decelerator cable) should be on the bottom and the throttle cable (accelerator cable) should be above. Fit the clamp toward outside rather than inside.
E. 30–60 mm (1.18–2.36 in)
F. Route the front brake light switch lead under the brake hose.
G. Route the right handlebar switch lead above the metal fitting on the brake hose.
H. Route the throttle cable above the under bracket, inside of the front fork and under the brake fluid reservoir hose.
I. Fasten the plastic band inside of the front fork. Fasten the band at position of the main switch lead (white), left handlebar switch lead (blue) and steering damper lead (white).
J. Clamp the horn lead back and inside of the lower bracket projection.
K. Lower bracket projection
L. Face the end of the plastic band to the left and cut off the excess end leaving 2–4 mm (0.08–0.16 in).
M. Outside of the vehicle.
N. Inside of the vehicle.
O. The main switch lead should be to the back of the vehicle.
P. Front of the vehicle (The left handlebar switch lead and steering damper lead can switch sides.)
Q. Face the end of the plastic band to front and cut off the excess end leaving 2–4 mm (0.08–0.16 in).
R. 20–40 mm (0.79–1.57 in)
S. Cut off the excess end of the plastic band leaving 2–4 mm (0.08–0.16 in). Connect it at the position shown in the illustration.

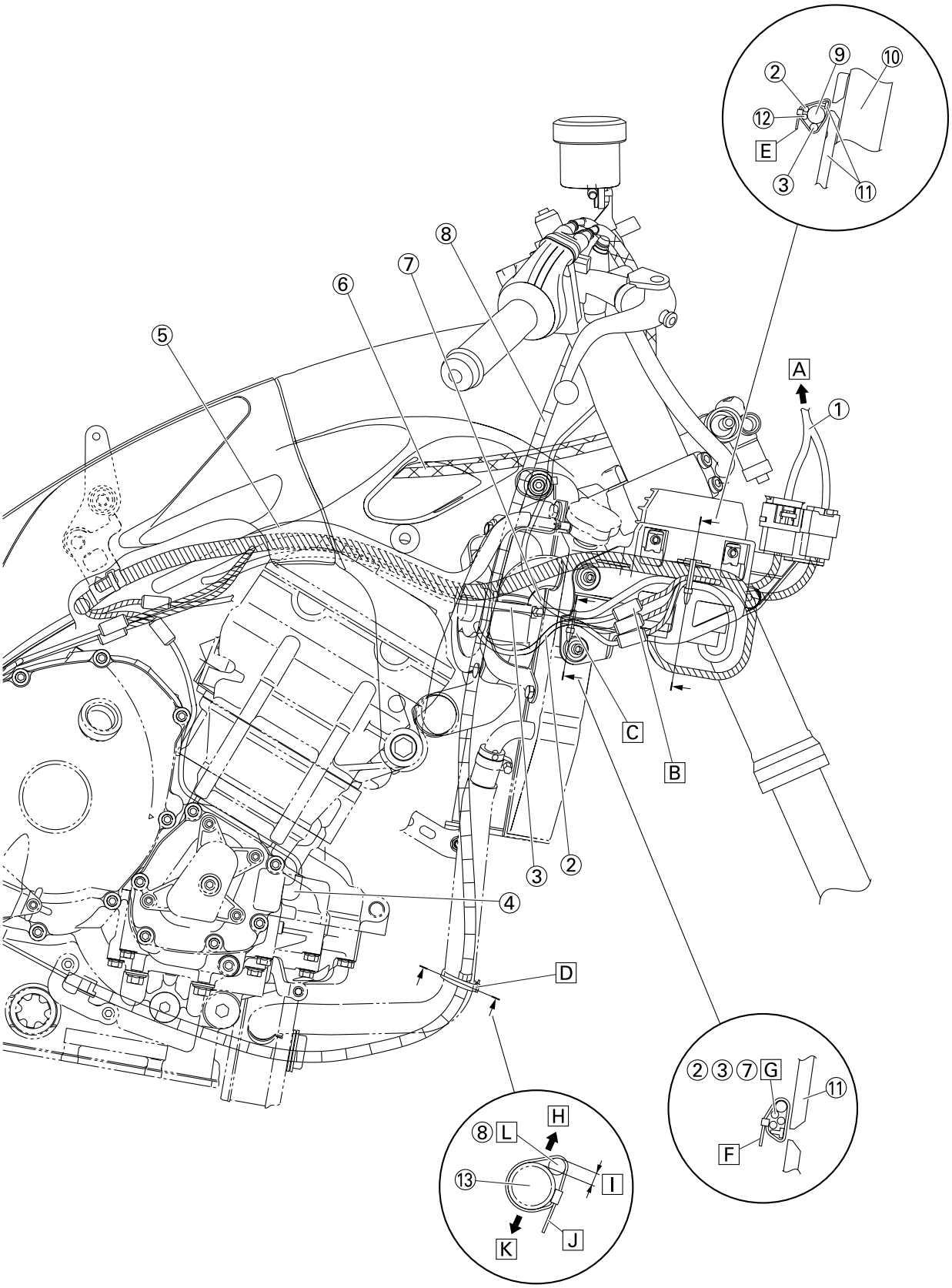
⑨
⑩
②
⑫
E
③
⑪
⑧
⑦
⑥
⑤
A
①
C
B
③
②
④
D
②③⑦G
⑪
F
⑧L
H
⑬
I
K
J

1. Headlight sub-wire harness
2. Right radiator fan motor lead
3. AC magneto lead
4. Crankshaft position sensor
5. Coolant reservoir hose
6. Throttle cable
7. Right handlebar switch lead
8. Clutch cable
9. Main harness
10. Rectifier/regulator
11. Rectifier/regulator bracket
12. Right handlebar switch lead
13. Oil cooler outlet hose

A. To the headlight
B. Make sure the right radiator fan motor lead coupler and two right handlebar switch lead couplers do not overlap in the horizontal direction.
C. Out of the two slits at the root of the rectifier/regulator bracket rib, clamp at the back of the slit.
D. Clamp the clutch cable and oil cooler outlet hose at the protector rivet ring of the clutch cable.
E. Clamp the right radiator fan motor lead, right handlebar switch lead, main harness and AC magneto lead under the rectifier/regulator bracket rib and face the end of the clamp down.
F. Clamp the right radiator fan motor lead, right handlebar switch lead and AC magneto lead under the rectifier/regulator bracket rib and face the end of the clamp down.
G. Order insignificant-right radiator fan motor lead, right handlebar switch lead, AC magneto lead
H. Outside of the vehicle
I. Outermost part of the clutch cable should be outward than outermost part of the oil cooler outlet hose.
J. Face the end of the clamp to inside.
K. Inside of the vehicle
L. Clamp the clutch cable in front of the oil cooler outlet hose.

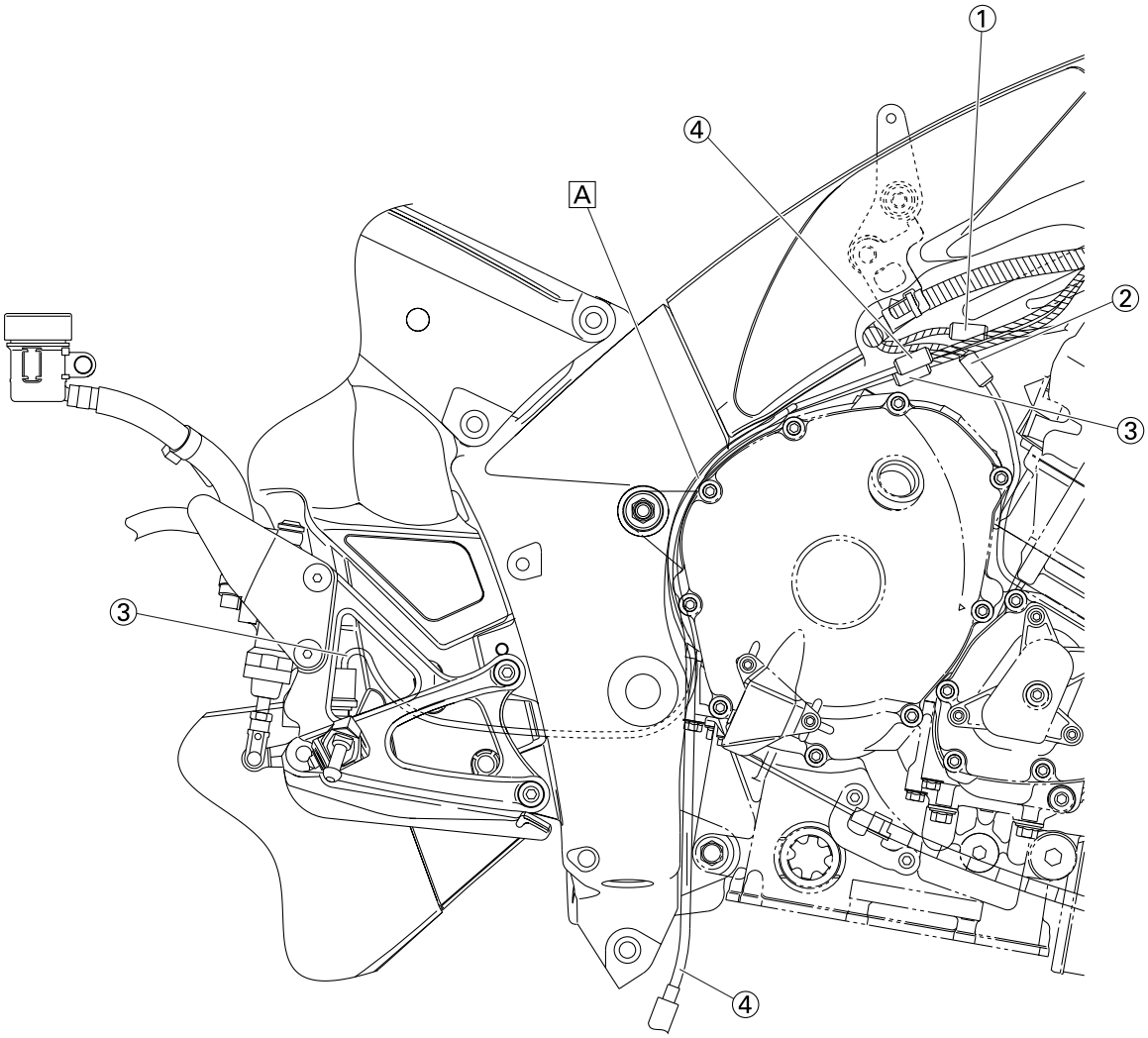
1
2
3
3
4
4
A

1. Ignition coil lead
2. Crankshaft position sensor lead
3. Rear brake light switch lead
4. O_2 sensor lead

A. Route the rear brake light switch lead outside of the O_2 sensor lead and push it to the occluding surface of the clutch cover.

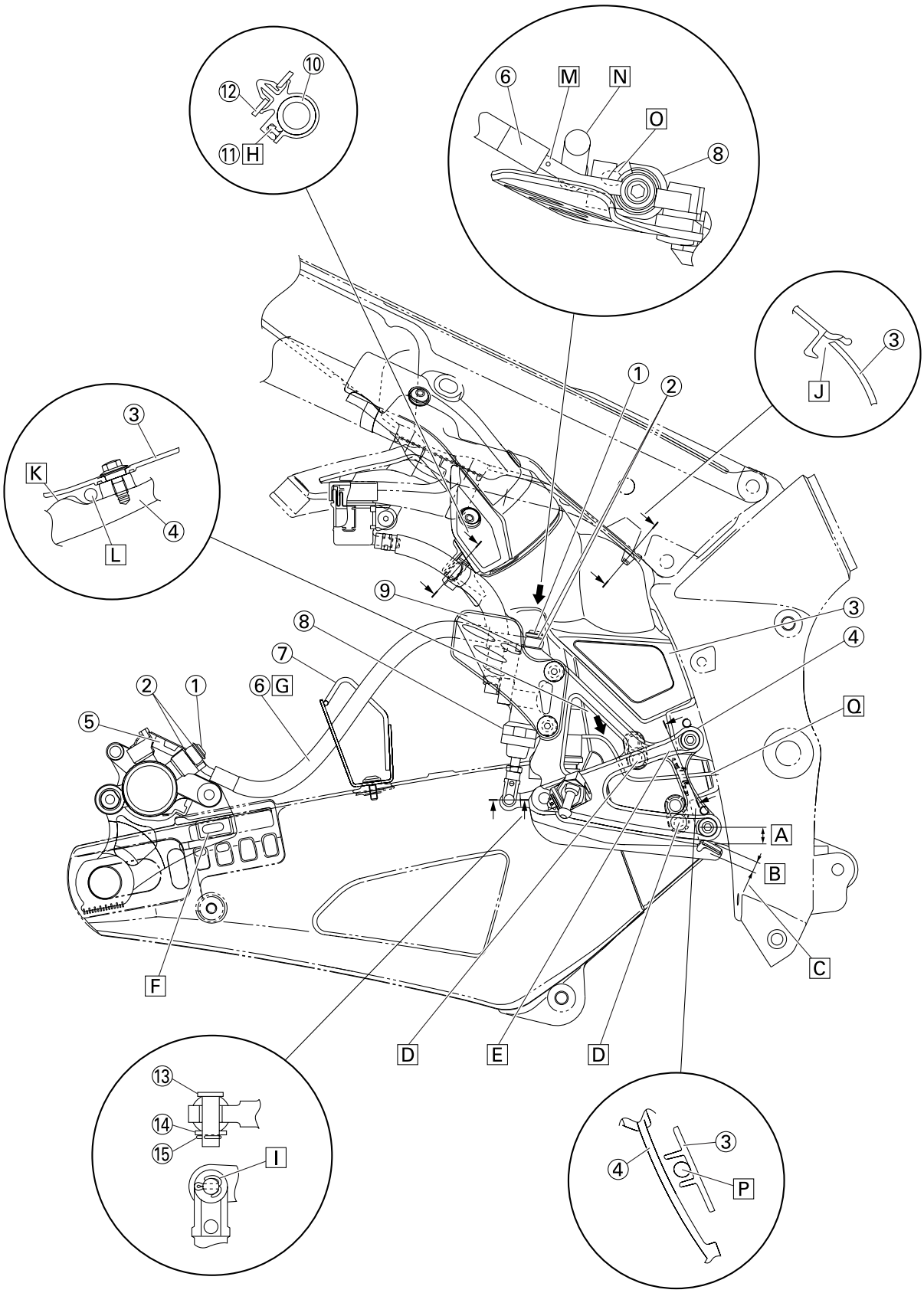
⑫
⑩
⑪ H
⑥
M
N
O
⑧
③
J
③
K
④
L
①
②
⑨
③
④
⑧
⑦
②
①
⑥ G
⑤
Q
A
B
C
F
D
E
D
⑬
⑭
⑮
I
③
④
P

1. Union bolt
2. Washer
3. Exhaust chamber cover
4. Right footrest assembly
5. Brake caliper
6. Brake hose
7. Brake hose holder
8. Brake master cylinder
9. Footrest plate
10. Brake fluid reservoir hose
11. Clamp
12. Right muffler pipe cover
13. Pin
14. Washer
15. Cotter pin

A. 12–18 mm (0.47–0.71 in)
B. 6–12 mm (0.24–0.47 in)
C. Fit the lightening point of the brake light within 6–12 mm (0.24–0.47 in) by adjusting the adjusting nut of the rear brake light switch.
D. Install the exhaust chamber cover to the right footrest assembly by aligning it to the bottom hole of the exhaust chamber cover.
E. Adjust the sag of the rear brake light switch lead so that it is not outside of the right footrest assembly.
F. When installing the rear brake caliper bracket, make sure to fit the torque receptor convex of the rear brake caliper bracket and torque receptor groove of the swingarm.
G. Make sure to pass the brake hose through the brake hose holder.
H. Face the clamp in the direction shown in the illustration.
I. Make sure to bend the cotter pin. It can be bent in the same direction.
J. Positioning of the exhaust chamber cover and exhaust chamber upper cover is shown in the illustration.
K. Projection of the right footrest assembly
L. When installing the exhaust chamber cover, route the rear brake light switch lead in front of the projection of the right footrest assembly.
M. Install the brake hose with its paint mark facing the brake master cylinder and upward.
N. Route the brake fluid reservoir hose inside of the brake hose.
O. Install the brake hose by contacting it against the stopper.
P. Route the rear brake light switch lead between the ribs of the exhaust chamber cover.
Q. Route the rear brake light switch lead between the top and bottom frame bosses for installing the right footrest assembly and to inside of the frame.

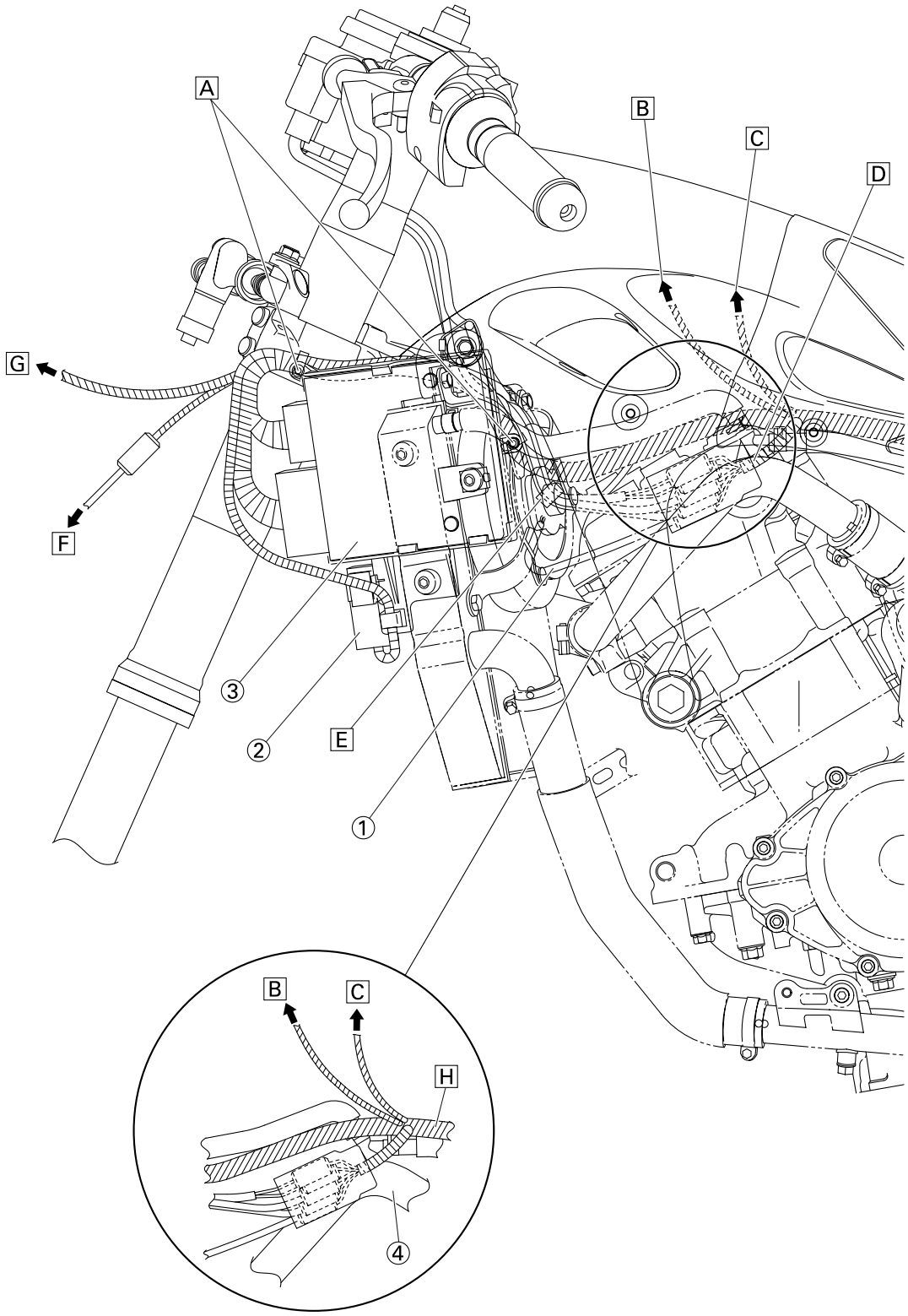
A
B
C
D
G
F
3
2
E
1
B
C
H
4

1. Left radiator fan motor lead
2. Radiator fan motor relay
3. ECU (engine control unit)
4. Radiator inlet pipe

A. Insert the clamp winding the main harness into the ECU bracket hole.
B. To the main harness branch lead, throttle body
C. To the throttle position sensor (for throttle valves)
D. Connect the left handlebar switch lead, main switch lead, steering damper lead and left radiator fan motor lead and put the connector cover.
E. Clamp the left handlebar switch lead, main switch lead and steering damper lead under the main harness. Ratchet of the clamp can face in any direction.
F. To the turn signal
G. To the intake air temperature sensor, head-light
H. Route the main harness outside of the radiator inlet pipe.

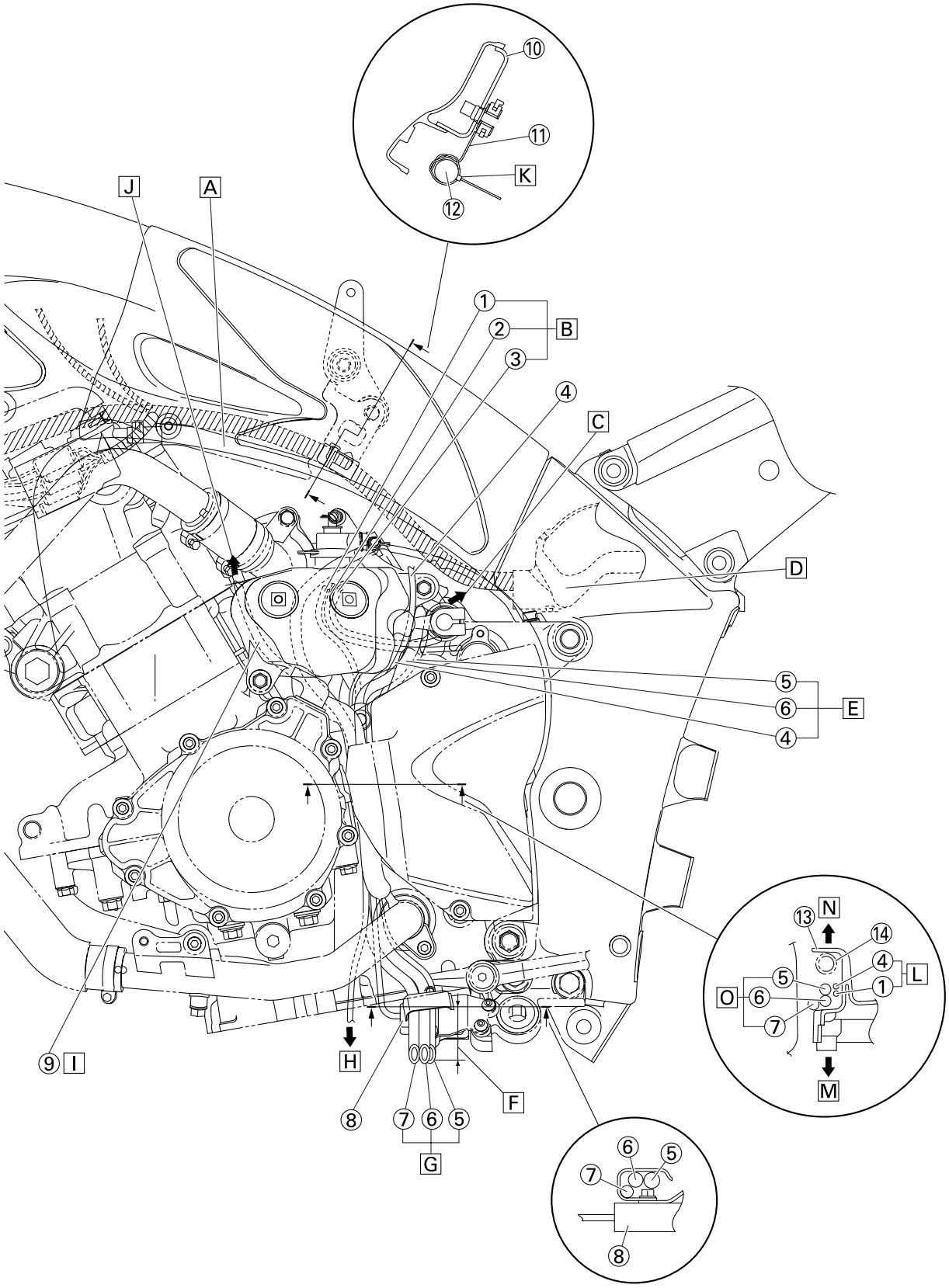
⑩
⑪
K
⑫
J
A
①
②
B
③
④
C
D
⑤
⑥
E
④
⑨
I
H
⑧
⑦
⑥
⑤
F
G
⑬
N
⑭
④
L
⑤
①
O
⑥
⑦
M
⑥
⑤
⑦
⑧

1. Oil level switch lead
2. Gear position sensor lead
3. Speed sensor lead
4. Sidestand switch lead
5. Fuel tank breather hose (Except for California)
6. Fuel tank overflow hose
7. Coolant reservoir breather hose
8. Sidestand switch
9. AC magneto lead
10. Frame
11. Main harness holder
12. Main harness
13. Drive sprocket cover
14. Water pump bypass hose

A. Route the thermostat bypass hose 2 under the main harness.
B. Route the oil level switch lead, gear position sensor lead and speed sensor lead through inner side of the coolant reservoir tank and to main harness.
C. To the fuel tank
D. Refer to fuel tank section.
E. Push the fuel tank breather hose, fuel tank overflow hose and sidestand switch lead inside of the flange of the drive sprocket cover.
F. 30–50 mm (1.18–1.97 in)
G. Route the fuel tank breather hose, fuel tank overflow hose and coolant reservoir breather hose inner side of the water pump bypass hose, then through the binding clamp on the sidestand switch and to the outside of the under cover. End of the hoses can face in any direction.
H. To the oil level switch
I. Route the AC magneto lead through inner side of the coolant reservoir tank and front and under the thermostat housing and to right side of the vehicle.
J. To the rectifier/regulator
K. Clamp the main harness and route it through the hole on the side of the main harness holder. Align it to the main harness tape (purple). Do not cut the end and face it inside of the vehicle (same for right & left).
L. Order insignificant-oil level switch lead, sidestand switch lead
M. Inside of the vehicle.
N. Outside of the vehicle.
O. Order insignificant-fuel tank breather hose, fuel tank drain hose and coolant reservoir drain hose.

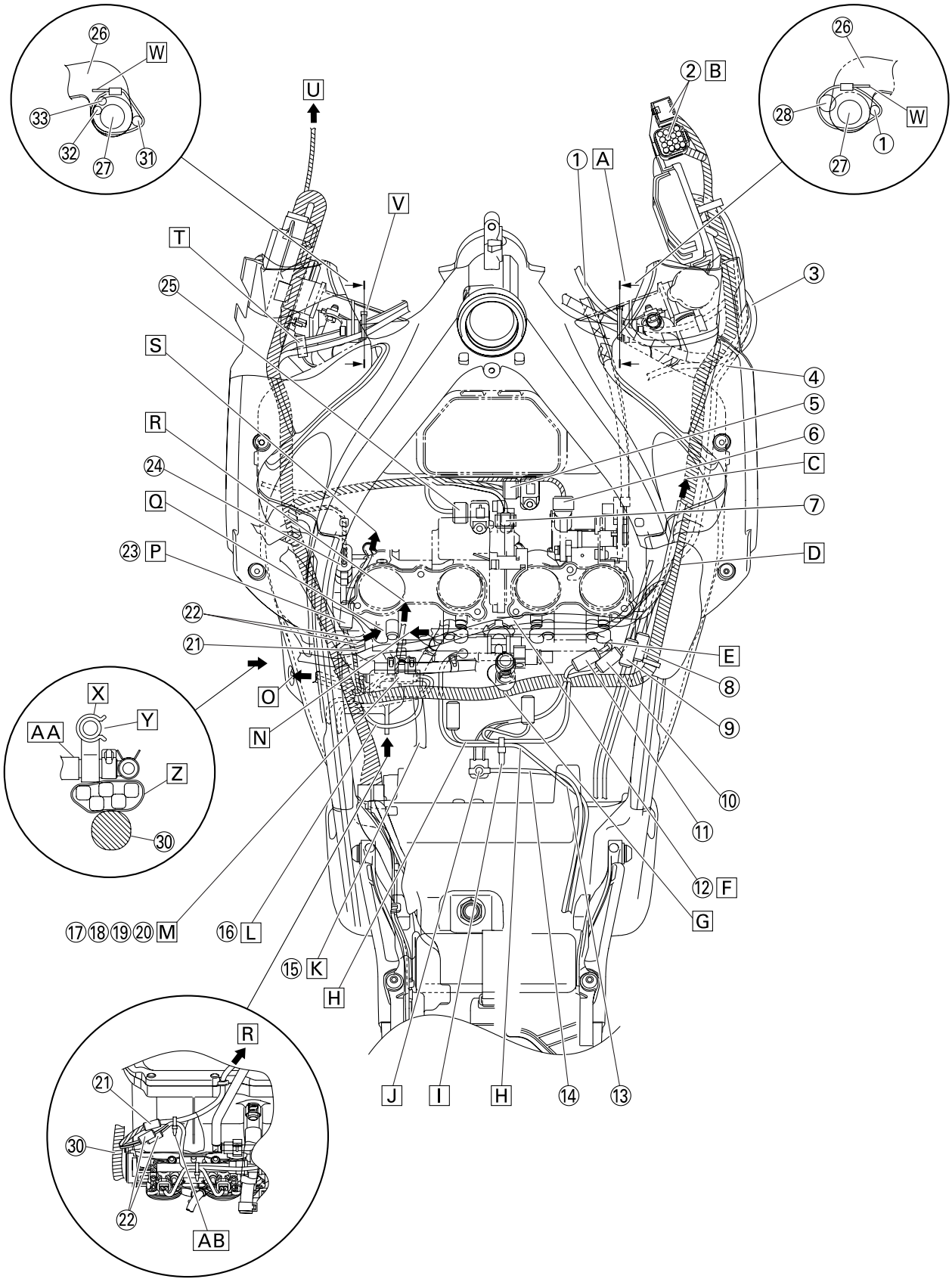
26
W
33
32
27
31
U
V
T
25
S
R
24
Q
23 P
22
21
O
N
X
Y
AA
Z
30
17 18 19 20 M
16 L
15 K
H
R
21
30
22
AB
J
I
H
14
13
G
12 F
11
10
9
8
E
D
C
7
6
5
4
3
1 A
2 B
26
28
W
1
27

1. Right handlebar switch lead
2. Headlight sub-wire harness
3. Right radiator fan motor lead
4. AC magneto lead
5. Atmospheric pressure sensor
6. Throttle position sensor (for throttle cable pulley)
7. Throttle servo motor
8. O_2 sensor lead
9. Rear brake light switch lead
10. Ignition coil lead
11. Crankshaft position sensor lead
12. Coolant reservoir hose
13. Starter motor lead
14. Battery negative lead
15. Canister purge hose (California only)
16. Sidestand switch
17. Oil level switch lead
18. Gear position sensor lead
19. Speed sensor lead
20. Sidestand switch lead
21. Secondary injector sub-wire harness
22. Throttle sub-wire harness
23. Intake funnel servo motor lead
24. Throttle position sensor (for throttle valves)
25. Intake air pressure sensor
26. Radiator stay
27. Frame boss
28. Clutch cable
29. Stay 1
30. Main harness
31. Main switch lead
32. Steering damper lead
33. Left handlebar switch lead

A. Clamp the clutch cable and right handlebar switch lead to inside of the radiator stay with the clamp aligning to their white tape marks.
B. After connecting the main harness and headlight sub-wire harness, insert them into the rectifier/regulator bracket stay.
C. To the radiator
D. Route the coolant reservoir hose, main harness and AC magneto lead in this order from the top. Each of them can either be right or left.
E. Route the ignition coil lead through the heat protector hole and to right of the engine.
F. Route the coolant reservoir hose in front of the crankcase breather hose and to the coolant reservoir tank. Route it as shown in the illustration and it should not touch the air bleed hose clip.
G. Route the main harness behind the crankcase breather hose.
H. Route the starter motor lead and fuel pump lead under the fuel tank breather hose and fuel tank overflow hose, behind the fuel hose and above the ground lead and battery negative lead.
I. Clamp at position of the starter motor lead (white) and fuel pump branch lead (purple). Do not cut the end and face the clamp to the back.
J. Install with the ground lead at the bottom and the battery negative lead on the top. Install the rivet of the each lead facing up. Angle of installing each lead is shown in the illustration.
K. Route the canister purge hose under the wire harness and air bleeding hose and above the coolant reservoir hose.
L. Route the sidestand switch lead outside of the installation dotted line at the back of the coolant reservoir tank.
M. Connect the oil level switch lead, gear position sensor lead, speed sensor lead and sidestand switch lead (order insignificant) and put the connector cover on.
N. To the AC magneto
O. To the coolant reservoir tank
P. The intake funnel servo motor lead can either be on top or bottom of the branched secondary injector sub-wire harness and throttle sub-wire harness.
Q. To the throttle body
R. To the air filter case
S. To the intake funnel servo motor
T. Clamp the main switch lead, left handlebar switch lead and steering damper lead between the radiator stay and main harness. Ratchet of the clamp can face in any direction.
U. To the intake air temperature sensor and headlight
V. Clamp the main switch lead, left handlebar switch lead and steering damper lead to inside of the radiator stay with the clamp aligning to their white and blue tape marks.
W. End of the clamp should be at front and facing down.
X. Clamp the coolant reservoir hose and water pump bypass hose.
Y. Install the coolant reservoir hose with the clamp opening facing up.
Z. Fit the connector cover including the oil level switch lead, gear position sensor lead, speed sensor lead and sidestand switch lead (order insignificant) between the thermostat bypass hose 2 and main harness.
AA. Install the water pump bypass hose with its clamp opening facing right of the vehicle.
AB. Clamp the secondary injector sub-wire harness and throttle sub-wire harness at the protector. Face the end of the clamp downward.

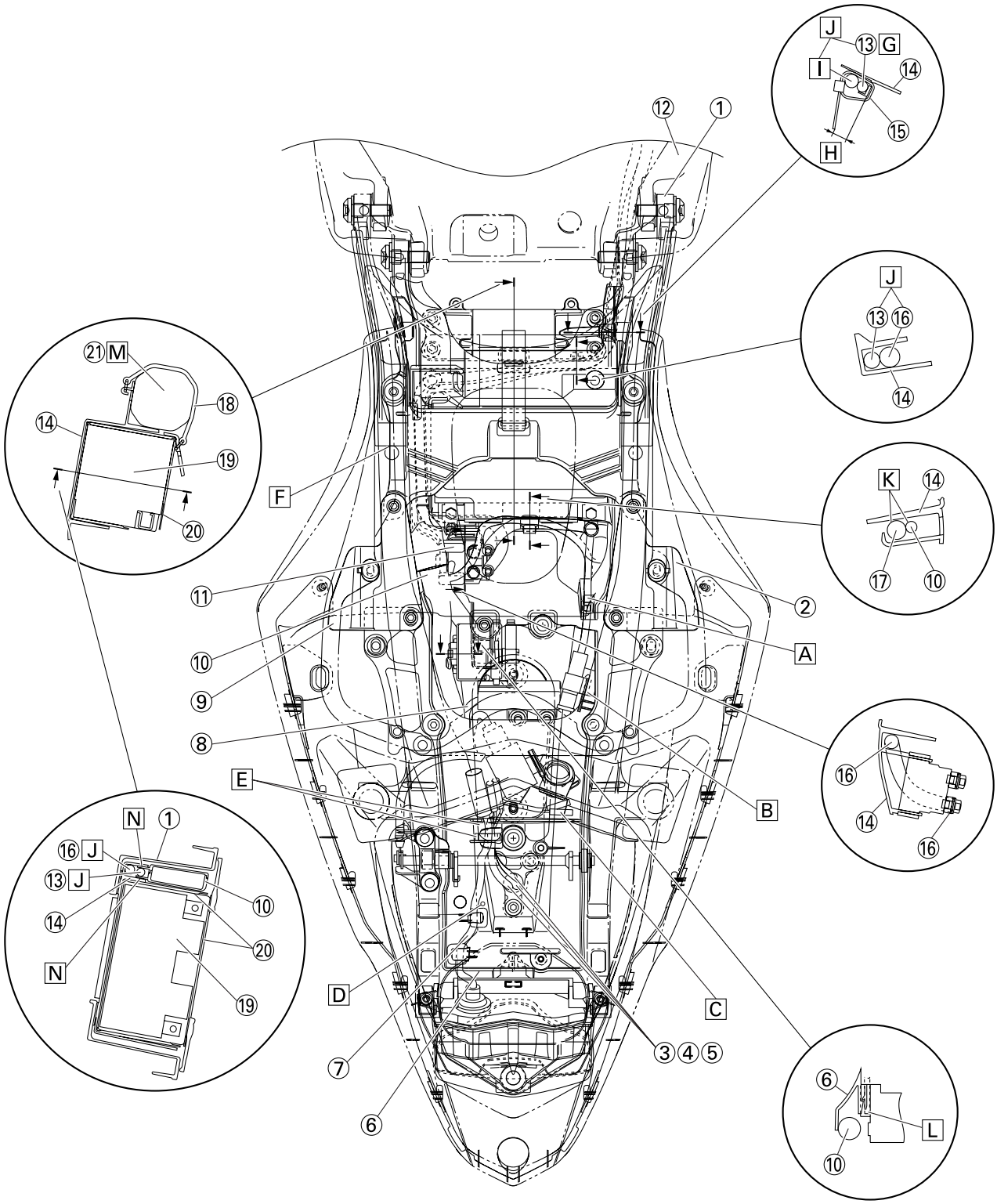
J
13
G
I
14
15
H
12
1
J
13
16
14
21
M
18
14
19
20
F
K
14
17
10
11
2
10
A
9
8
16
14
16
E
B
N
1
16
J
13
J
14
10
20
N
19
D
C
7
3
4
5
6
6
L
10

1. Rear frame
2. Right upper tail cover bracket
3. License plate light lead
4. Right turn signal light lead
5. Left turn signal light lead
6. Battery box 2
7. Tail/brake light lead
8. Lean angle sensor lead
9. Left upper tail cover bracket
10. Main harness
11. Starter relay
12. Front frame
13. Battery negative lead
14. Battery box 1
15. Clamp
16. Starter motor lead
17. Battery positive lead
18. Tool band
19. Battery
20. Battery seat
21. Tool

A. Pass the main fuse lead through the guide of the battery box 1.
B. Insert the main fuse until it is completely over the tab projection of the battery box 2.
C. Put the anti-theft alarm lead coupler in front of the dividing rib of the battery box 2.
D. Route the tail/brake light lead through the left of the battery box 2 boss.
E. After passing the tail/brake light lead, license plate light lead, right turn signal light lead and left turn signal light lead through the guide of the battery box 2, route them between the ribs.
F. When installing the seal, align it to the push pin trace mark of the rear frame (both left & right).
G. Align the positioning tape of the battery negative lead to the clamp.
H. Face the excess end of the clamp to inside and the end should not be above the tool reception bearing surface of the battery box 1.
I. Align the positioning tape of the starter motor lead to the clamp.
J. Up/down position of the battery negative lead and starter motor lead is shown in the illustration.
K. Install the battery positive lead (red) on top.
L. Insert the fuse box until back of the tab of the battery box 2.
M. Installing direction of the tool is insignificant.
N. Install the main harness with its tab fitted inside of the battery box 1.

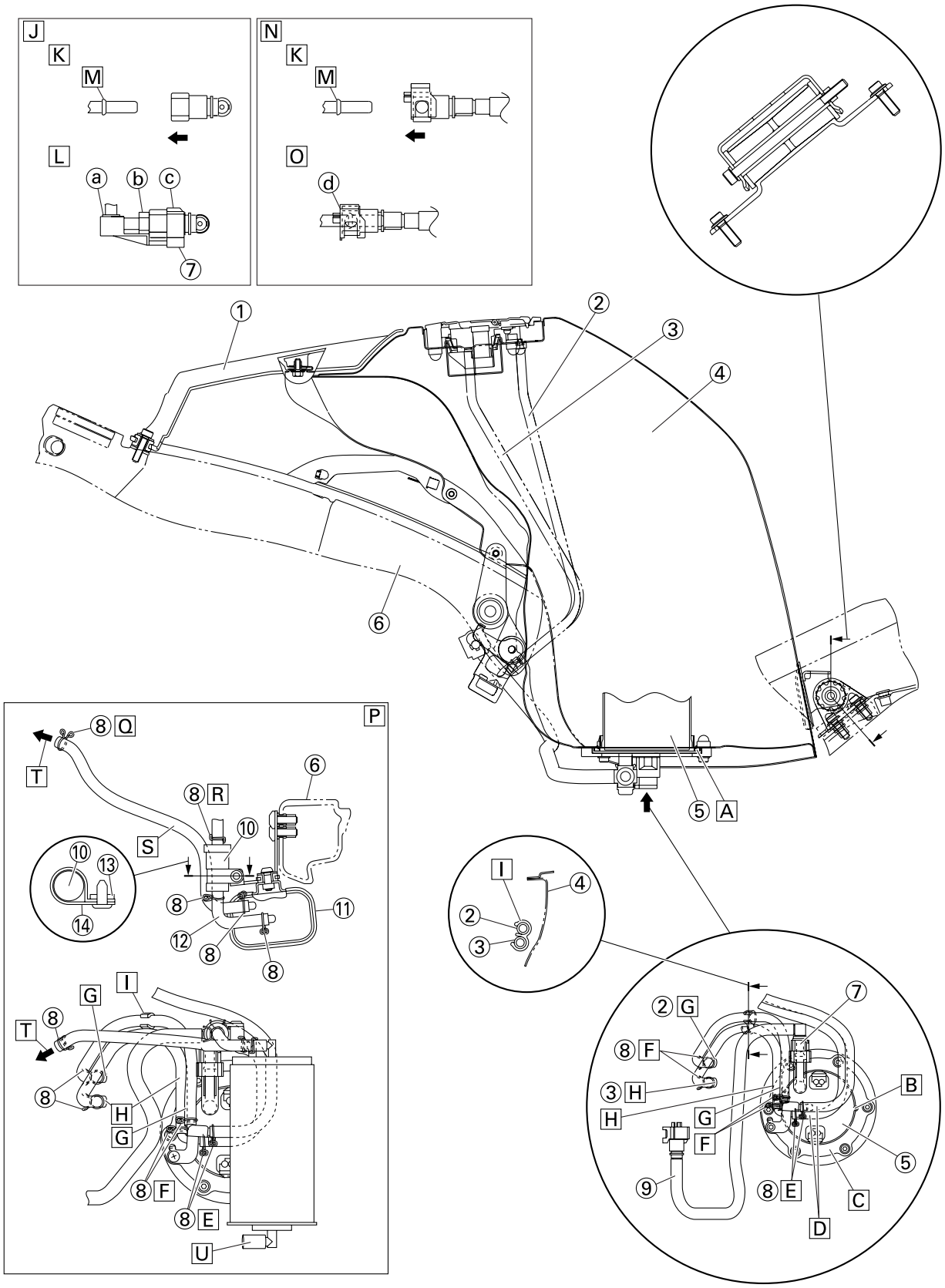
J
K
M
L
a
b
c
7
N
K
M
O
d
1
2
3
4
6
5
A
P
8
Q
T
6
8
R
10
S
10
13
14
8
11
12
8
8
I
G
T
8
8
H
G
8
F
8
E
U
I
4
2
3
2
G
7
8
F
3
H
H
G
F
B
5
9
8
E
C
D

1. Fuel tank upper cover
2. Fuel tank breather hose
3. Fuel tank overflow hose
4. Fuel tank
5. Fuel pump
6. Frame
7. Fuel hose connector cover
8. Clip
9. Fuel hose
10. Rollover valve
11. Canister
12. Rollover valve hose
13. Canister bracket
14. Clamp

A. Install the lip on the fuel pump gasket upward.
B. Pump positioning punch mark
C. Install the fuel pump with the pump positioning punch mark and fuel pump bracket concave part at the same position.
D. Install the fuel tank overflow hose and fuel tank breather hose with the white paint mark on each hose facing right of the vehicle.
E. Align the clip knob to the paint mark on each hose and face it to right of the vehicle.
F. Align the clip knob to the paint mark on each hose and face it to front of the vehicle.
G. Install the fuel tank breather hose with its white paint facing front of the vehicle.
H. Install the fuel tank overflow hose with its yellow paint facing front of the vehicle.
I. Install the fuel tank overflow hose and fuel tank breather hose with the clamp opening facing down.
J. Fuel pump side
K. Insert the connector until the click sound is heard and check that the connector does not come off. Make sure that no foreign matter is caught in the sealing section. (It is prohibited to wear the cotton work gloves or equivalent coverings.)
L. After item “K” mentioned above is finished, check that the clamp is inserted from the down side “a”, “b” and “c” sections are perfectly equipped.
M. This part works as a dropout stopper
N. Engine side
O. After Step “K” as above is finished, check that the connector is completely attached by sliding the double lock (orange part) “d” on the connector as shown in the illustration and seeing if it touches firmly or not.
P. California only
Q. Face the clip’s knob upward.
R. Align the clip knob to the paint mark on each hose and face it to left of the vehicle.
S. Install the canister hose with the 90° bent hose to the canister side and about parallel to the rollover valve.
T. To the throttle body

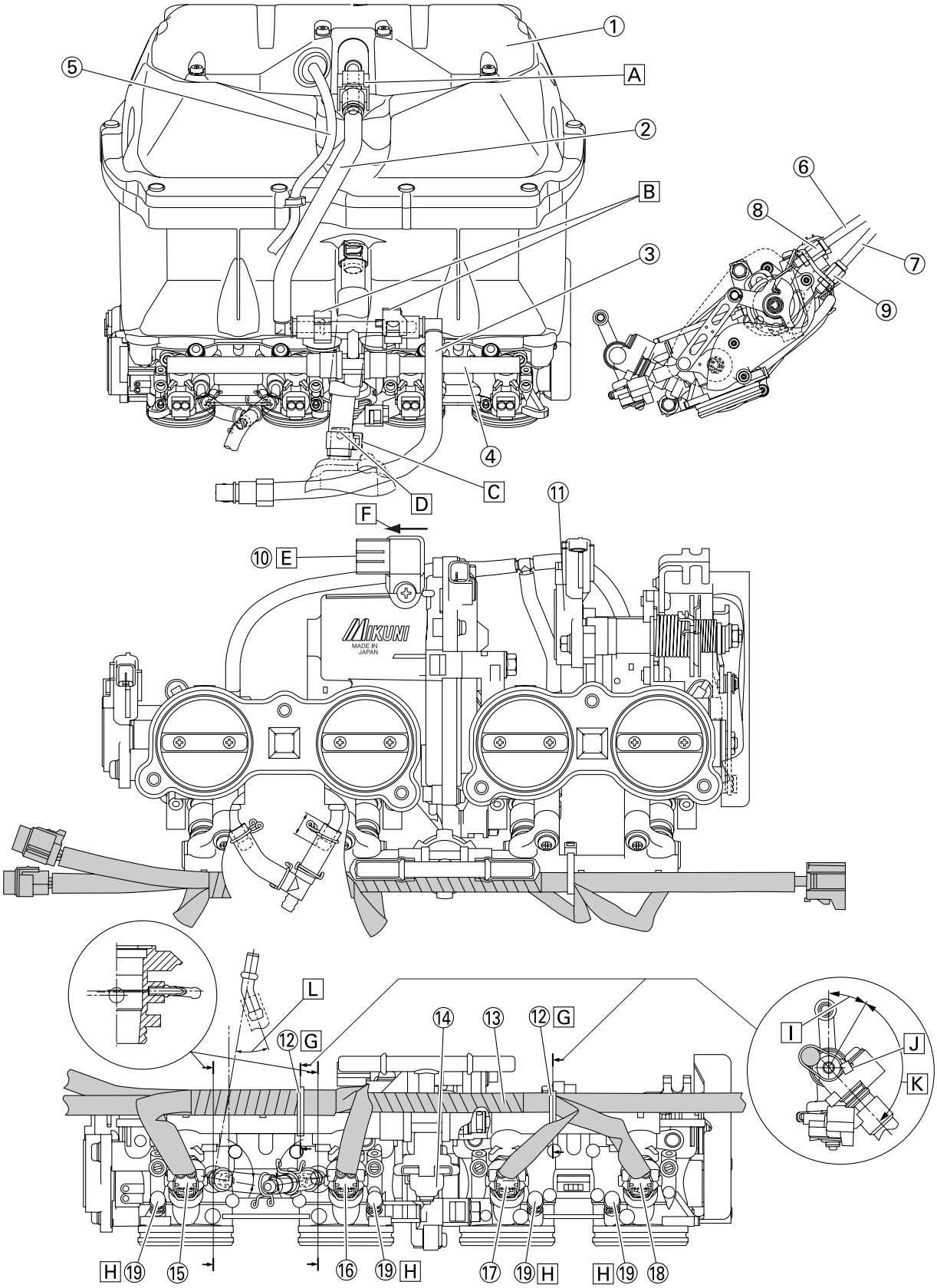
1
5
A
2
6
B
8
7
3
9
4
C
D
11
F
10 E
MIKUNI
MADE IN JAPAN
L
14
13
12 G
12 G
I
J
K
H 19
15
16
19 H
17
19 H
H 19
18

1. Upper air filter case
2. Fuel hose (secondary injector fuel rail side)
3. Fuel hose (primary injector fuel rail side)
4. Primary injector fuel rail
5. Sub-wire harness (secondary injector side)
6. Throttle cable (pull side)
7. Throttle cable (return side)
8. Black coating
9. White coating
10. Intake air pressure sensor
11. Accelerator position sensor
12. Plastic locking tie
13. Sub-wire harness (primary injector side)
14. Fuel damper
15. Injector #1 coupler
16. Injector #2 coupler
17. Injector #3 coupler
18. Injector #4 coupler
19. Cap

A. Checker color: orange
B. Checker color: black
C. Rotate the clip to the right of the vehicle.
D. Adjust top edge of the clip to top edge of the paint.
E. Make sure the intake air pressure sensor is touching against the stopper and install it horizontally.
F. After installing the intake air pressure sensor, do not press it to the direction of the arrow.
G. Position the plastic locking tie as shown in the illustration.
H. It is a cap for synchronization.
I. 30°
J. Mass of plastic locking ties
K. Mass of plastic locking ties should be within this range.
L. 30°

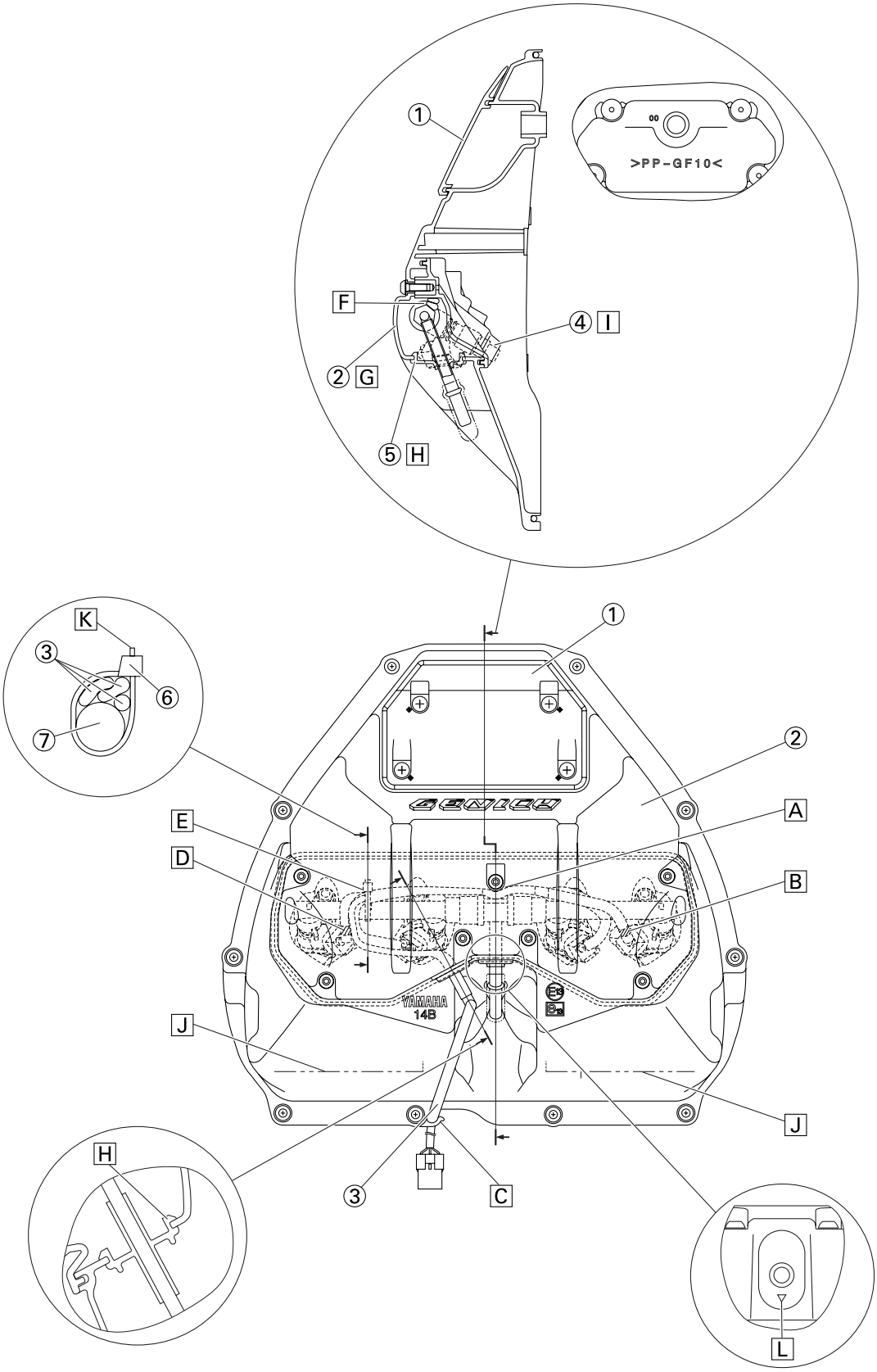
>PP-GF10<
YAMAHA
14B

1. Cap case
2. Upper air filter case
3. Sub-wire harness
4. Cap case assembly
5. Grommet
6. Plastic locking tie
7. Fuel rail

A. Sub-wire harness should not be pinched under the bearing surface of the bolt.
B. #4 purple tape
C. Pinch the sub-wire harness with the hook. When pinching, make sure not to change the shape of the hook.
D. #1 white tape
E. Fasten the plastic locking tie at the branch root of the sub-wire harness. Position the plastic locking tie as shown in the illustration.
F. Position the sub-wire harness under the bearing surface of the bolt so that it is not pinched.
G. When installing the air filter case, the sub-wire harness should not be pinched.
H. Make sure the grommet is not pinched.
I. When installing the cap case assembly, the sub-wire harness should not be pinched.
J. The indicated line is used as a mark for pasting the caution label for the US.
K. Face the end of the plastic locking tie to front of the vehicle and cut off the excess end leaving 2–4 mm (0.08–0.16 in).
L. Install with the △ mark facing down.

PERIODIC CHECKS AND ADJUSTMENTS

EAS20450
PERIODIC MAINTENANCE

EAS20460
INTRODUCTION
This chapter includes all information necessary to perform recommended checks and adjustments. If followed, these preventive maintenance procedures will ensure more reliable vehicle operation, a longer service life and reduce the need for costly overhaul work. This information applies to vehicles already in service as well as to new vehicles that are being prepared for sale. All service technicians should be familiar with this entire chapter.

EAS14B1033
PERIODIC MAINTENANCE CHART FOR THE EMISSION CONTROL SYSTEM

NO.		ITEM	ROUTINE	INITIAL	ODOMETER READINGS				
				600 mi (1000 km) or 1 month	4000 mi (7000 km) or 6 months	8000 mi (13000 km) or 12 months	12000 mi (19000 km) or 18 months	16000 mi (25000 km) or 24 months	20000 mi (31000 km) or 30 months
1	*	**Fuel line**	• Check fuel hoses for cracks or damage. • Replace if necessary.		√	√	√	√	√
2	*	**Spark plugs**	• Check condition. • Adjust gap and clean. • Replace every 8000 mi (13000 km) or 12 months.		√	Replace.	√	Replace.	√
3	*	**Valve clearance**	• Check and adjust valve clearance when engine is cold.	Every 26600 mi (42000 km)					
4	*	**Crankcase breather system**	• Check breather hose for cracks or damage. • Replace if necessary.		√	√	√	√	√
5	*	**Fuel injection**	• Adjust synchronization.		√	√	√	√	√
6	*	**Exhaust system**	• Check for leakage. • Tighten if necessary. • Replace gasket(s) if necessary.		√	√	√	√	√
7	*	**Evaporative emission control system (for California only)**	• Check control system for damage. • Replace if necessary.				√		√
8	*	**Air induction system**	• Check the air cut-off valve, reed valve, and hose for damage. • Replace any damaged parts if necessary.				√		√

* Since these items require special tools, data and technical skills, have a Yamaha dealer perform the service.

EAS14B1034

GENERAL MAINTENANCE AND LUBRICATION CHART

NO.		ITEM	ROUTINE	INITIAL	ODOMETER READINGS				
				600 mi (1000 km) or 1 month	4000 mi (7000 km) or 6 months	8000 mi (13000 km) or 12 months	12000 mi (19000 km) or 18 months	16000 mi (25000 km) or 24 months	20000 mi (31000 km) or 30 months
1	*	**Air filter element**	• Replace.	Every 24000 mi (37000 km)					
2	*	**Clutch**	• Check operation. • Adjust or replace cable.	√	√	√	√	√	√
3	*	**Front brake**	• Check operation, fluid level, and for fluid leakage. • Replace brake pads if necessary.	√	√	√	√	√	√
4	*	**Rear brake**	• Check operation, fluid level, and for fluid leakage. • Replace brake pads if necessary.	√	√	√	√	√	√
5	*	**Brake hoses**	• Check for cracks or damage.		√	√	√	√	√
			• Replace.	Every 4 years					
6	*	**Wheels**	• Check runout and for damage. • Replace if necessary.		√	√	√	√	√
7	*	**Tires**	• Check tread depth and for damage. • Replace if necessary. • Check air pressure. • Correct if necessary.		√	√	√	√	√
8	*	**Wheel bearings**	• Check bearings for smooth operation. • Replace if necessary.		√	√	√	√	√
9	*	**Swingarm pivot bearings**	• Check operation and for excessive play.		√	√	√	√	√
			• Lubricate with lithium-soap-based grease.	Every 30000 mi (50000 km)					
10		**Drive chain**	• Check chain slack, alignment and condition. • Adjust and lubricate chain with a special O-ring chain lubricant thoroughly.	Every 500 mi (800 km) and after washing the motorcycle or riding in the rain					
11	*	**Steering bearings**	• Check bearing assemblies for looseness. • Moderately repack with lithium-soap- based grease every 16000 mi (25000 km) or 24 months.	√	√	√	√	Repack.	√
12	*	**Steering damper**	• Check operation and for oil leakage.		√	√	√	√	√
13	*	**Chassis fasteners**	• Check all chassis fitting and fasteners. • Correct if necessary.		√	√	√	√	√
14		**Brake lever pivot shaft**	• Apply silicone grease lightly.		√	√	√	√	√
15		**Brake pedal pivot shaft**	• Apply lithium-soap-based grease lightly.		√	√	√	√	√
16		**Clutch lever pivot shaft**	• Apply lithium-soap-based grease lightly.		√	√	√	√	√
17		**Shift pedal pivot shaft**	• Apply lithium-soap-based grease lightly.		√	√	√	√	√
18		**Sidestand pivot**	• Check operation. • Apply lithium-soap-based grease lightly.		√	√	√	√	√
19	*	**Sidestand switch**	• Check operation and replace if necessary.	√	√	√	√	√	√

NO.		ITEM	ROUTINE	INITIAL	ODOMETER READINGS				
				600 mi (1000 km) or 1 month	4000 mi (7000 km) or 6 months	8000 mi (13000 km) or 12 months	12000 mi (19000 km) or 18 months	16000 mi (25000 km) or 24 months	20000 mi (31000 km) or 30 months
20	*	**Front fork**	• Check operation and for oil leakage. • Replace if necessary.		√	√	√	√	√
21	*	**Shock absorber assembly**	• Check operation and for oil leakage. • Replace if necessary.		√	√	√	√	√
22	*	**Rear suspension link pivots**	• Check operation. • Correct if necessary.			√		√	
23	*	**Engine oil**	• Change (warm engine before draining).	√	√	√	√	√	√
24	*	**Engine oil filter cartridge**	• Replace.		√		√		√
25	*	**Cooling system**	• Check hoses for cracks or damage. • Replace if necessary.		√	√	√	√	√
			• Change with ethylene glycol antifreeze coolant every 24 months.					Change.	
26	*	**Front and rear brake switches**	• Check operation.	√	√	√	√	√	√
27	*	**Control cables**	• Apply Yamaha chain and cable lube or engine oil thoroughly.	√	√	√	√	√	√
28	*	**Throttle grip housing and cable**	• Check operation and free play. • Adjust the throttle cable free play if necessary. • Lubricate the throttle grip housing and cable.		√	√	√	√	√
29	*	**Lights, signals and switches**	• Check operation. • Adjust headlight beam.	√	√	√	√	√	√

* Since these items require special tools, data and technical skills, have a Yamaha dealer perform the service.

TIP

From 24000 mi (37000 km) or 36 months, repeat the maintenance intervals starting from 8000 mi (13000 km) or 12 months.

TIP

- Air filter
  - This model's air filter is equipped with a disposable oil-coated paper element, which must not be cleaned with compressed air to avoid damaging it.
  - The air filter element needs to be replaced more frequently when riding in unusually wet or dusty areas.
- Hydraulic brake service
  - After disassembling the brake master cylinders and calipers, always change the fluid. Regularly check the brake fluid levels and fill the reservoirs as required.
  - Every two years replace the internal components of the brake master cylinders and calipers, and change the brake fluid.
  - Replace the brake hoses every four years and if cracked or damaged.

EAS21030
CHECKING THE FUEL LINE (Primary injector)
The following procedure applies to all of the fuel, vacuum and breather hoses.
1. Remove:
   - Rider seat
     Refer to “GENERAL CHASSIS” on page 4-1.
2. Remove:
   - Fuel tank
     Refer to “FUEL TANK” on page 7-1.
   - Air filter case
     Refer to “AIR FILTER CASE” on page 7-5.
3. Check:
   - Fuel hose “1”
   - Vacuum hoses “2”
   - Breather hose “3”
   - Over flow hose “4”
     Cracks/damage → Replace.
     Loose connection → Connect properly.

TIP
Before removing the fuel hoses, place a few rags in the area under where it will be removing.

ECA14940
NOTICE
Make sure the fuel tank breather hose is routed correctly.

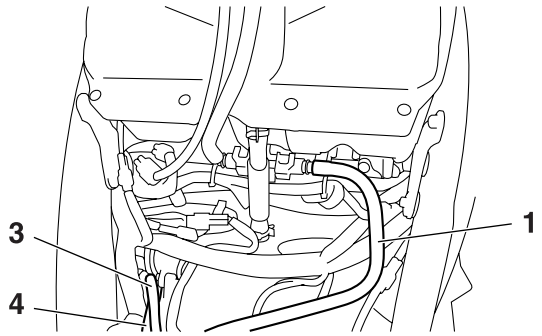

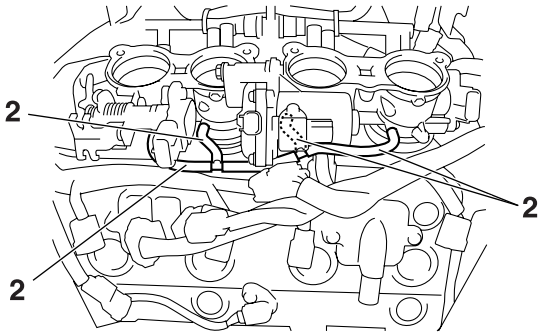

4. Install:
   - Fuel tank
     Refer to “FUEL TANK” on page 7-1.
5. Install:
   - Rider seat
     Refer to “GENERAL CHASSIS” on page 4-1.

EAS14B1114
CHECKING THE FUEL LINE (Secondary injector)
1. Remove:
   - Rider seat
     Refer to “GENERAL CHASSIS” on page 4-1.
2. Remove:
   - Fuel tank
     Refer to “FUEL TANK” on page 7-1.
3. Check:
   - Fuel hose “1”
     Cracks/damage → Replace.
     Loose connection → Connect properly.

TIP
Before removing the fuel hoses, place a few rags in the area under where it will be removing.

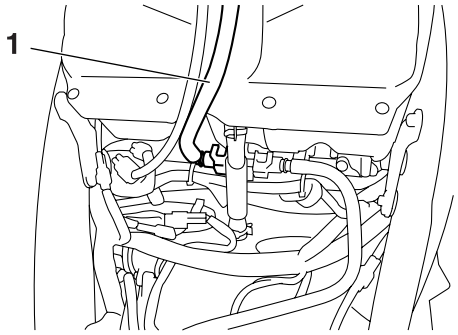

4. Install:
   - Fuel tank
     Refer to “FUEL TANK” on page 7-1.
5. Install:
   - Rider seat
     Refer to “GENERAL CHASSIS” on page 4-1.

EAS20680
CHECKING THE SPARK PLUGS
The following procedure applies to all of the spark plugs.
1. Remove:
   - Side cowlings
   - Lower cowlings
     Refer to “GENERAL CHASSIS” on page 4-1.

2. Remove:
   - Fuel tank
     Refer to “FUEL TANK” on page 7-1.
3. Remove:
   - Air filter case
     Refer to “AIR FILTER CASE” on page 7-5.
4. Remove:
   - Radiator
   - Radiator fan
     Refer to “RADIATOR” on page 6-1.
5. Disconnect:
   - Ignition coil
6. Remove:
   - Spark plug

ECA13320

NOTICE

Before removing the spark plugs, blow away any dirt accumulated in the spark plug wells with compressed air to prevent it from falling into the cylinders.

7. Check:
   - Spark plug type
     Incorrect → Change.

	Manufacturer/model **NGK/LMAR9E-J**

8. Check:
   - Electrode “1”
     Damage/wear → Replace the spark plug.
   - Insulator “2”
     Abnormal color → Replace the spark plug.
     Normal color is medium-to-light tan.
9. Clean:
   - Spark plug
     (with a spark plug cleaner or wire brush)
10. Measure:
    - Spark plug gap “a”
      (with a wire thickness gauge)
      Out of specification → Regap.

	Spark plug gap **0.6–0.7 mm (0.024–0.028 in)**

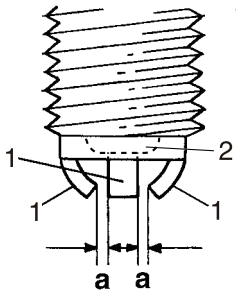

11. Install:
    - Spark plug

	Spark plug **13 Nm (1.3 m·kgf, 9.4 ft·lbf)**

TIP

Before installing the spark plug, clean the spark plug and gasket surface.

12. Install:
    - Ignition coil
13. Install:
    - Radiator fan
    - Radiator
      Refer to “RADIATOR” on page 6-1.
14. Install:
    - Air filter case
      Refer to “AIR FILTER CASE” on page 7-5.
15. Install:
    - Fuel tank
      Refer to “FUEL TANK” on page 7-1.
16. Install:
    - Lower cowlings
    - Side cowlings
      Refer to “GENERAL CHASSIS” on page 4-1.

EAS20490

ADJUSTING THE VALVE CLEARANCE

The following procedure applies to all of the valves.

TIP

- Valve clearance adjustment should be made on a cold engine, at room temperature.
- When the valve clearance is to be measured or adjusted, the piston must be at top dead center (TDC) on the compression stroke.

1. Remove:
   - Rider seat
     Refer to “GENERAL CHASSIS” on page 4-1.

- Fuel tank
  Refer to “FUEL TANK” on page 7-1.
- Air filter case
  Refer to “AIR FILTER CASE” on page 7-5.
- Lower cowlings
- Side cowlings
  Refer to “GENERAL CHASSIS” on page 4-1.
- Throttle body assembly
  Refer to “THROTTLE BODIES” on page 7-11.
- Air cut-off valve
  Refer to “AIR INDUCTION SYSTEM” on page 7-21.
- Radiator
- Radiator fan motor
  Refer to “RADIATOR” on page 6-1.

2. Remove:
   - Ignition coils
   - Spark plugs
   - Cylinder head cover
   - Cylinder head cover gasket
     Refer to “CAMSHAFTS” on page 5-13.
3. Remove:
   - Pickup rotor cover 1 “1”
   - Pickup rotor cover 2 “2”

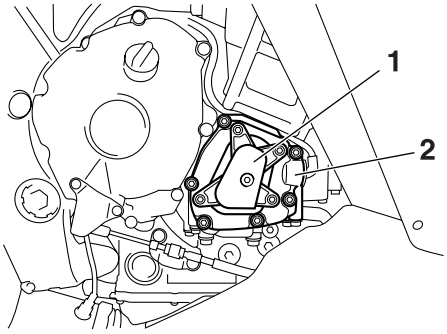

4. Measure:
   - Valve clearance
     Out of specification → Adjust.

Valve clearance (cold)
Intake
0.11–0.20 mm (0.0043–0.0079 in)
Exhaust
0.21–0.25 mm (0.0083–0.0098 in)

▼▼▼▼▼▼▼▼▼▼▼▼▼▼▼▼▼▼▼▼▼▼▼▼▼▼▼▼▼▼▼▼▼▼

a. Turn the crankshaft clockwise and align the pickup rotor K mark “a” and crankcase occluding surface “b”.
   (At this time, make sure the intake camshaft sprocket punch mark “c” and cylinder head occluding surface “d”, and exhaust camshaft sprocket punch mark “e” and cylinder head occluding surface “f” are aligned. If not, repeat until they are aligned.)

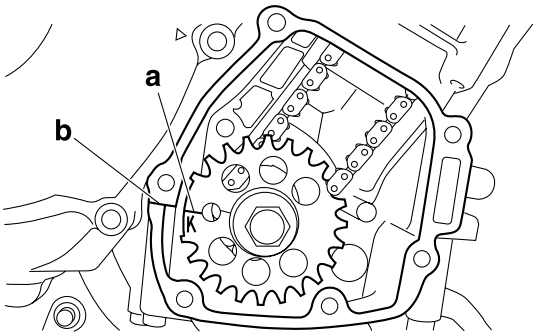

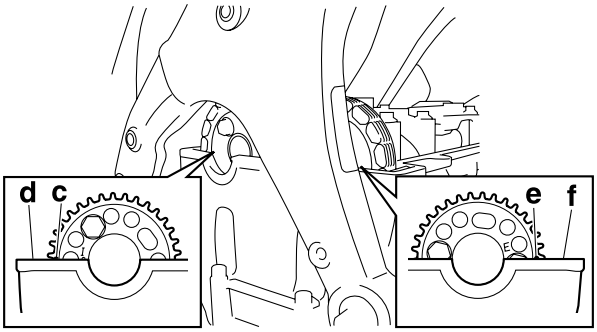

b. Install the pickup rotor cover 2 “1”.

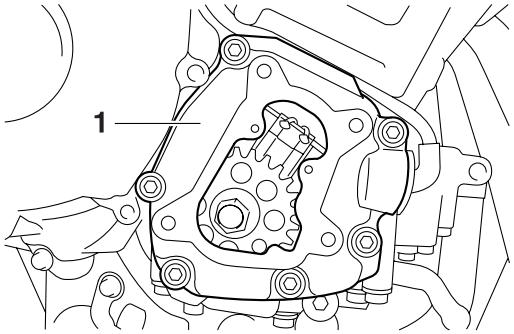

c. Turn the crankshaft 105 degrees in clockwise and align the pickup rotor K mark “a” and crankshaft position sensor I mark “b”.

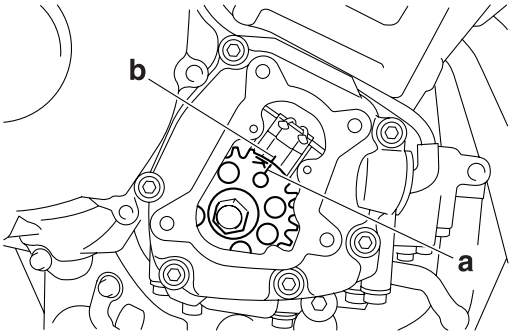

d. Measure the valve clearance #1 with a thickness gauge “1”.

Thickness gauge
90890-03180
Feeler gauge set
YU-26900-9

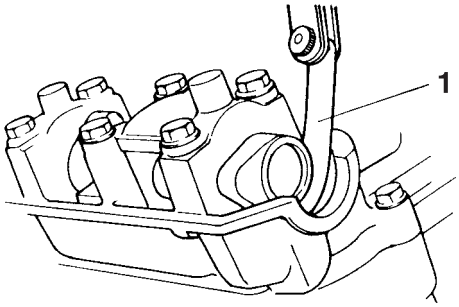

e. Turn the crankshaft 260 degrees in clockwise and align the pickup rotor I mark “a” and crankshaft position sensor I mark “b”.

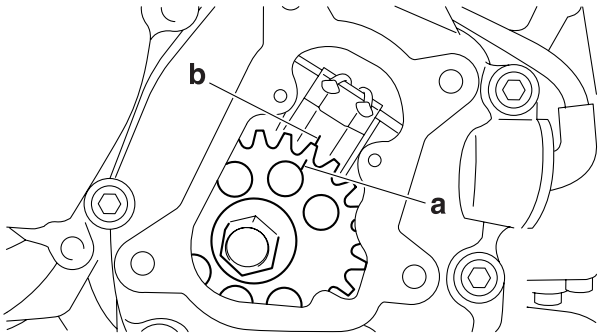

f. Measure the valve clearance #3 with a thickness gauge.

Thickness gauge
90890-03180
Feeler gauge set
YU-26900-9

g. Turn the crankshaft 205 degrees in clockwise and align the pickup rotor T mark “a” and crankshaft position sensor I mark “b”.

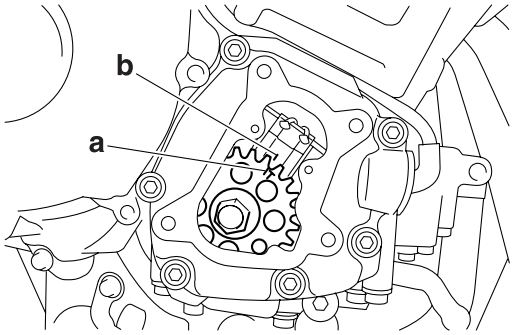

h. Measure the valve clearance #2 and #4 with a thickness gauge.

Thickness gauge
90890-03180
Feeler gauge set
YU-26900-9

TIP
- If the valve clearance is incorrect, record the measured reading.
- Measure the valve clearance in the following sequence.

Valve clearance measuring sequence
Cylinder #1 → #3 → #2 → #4

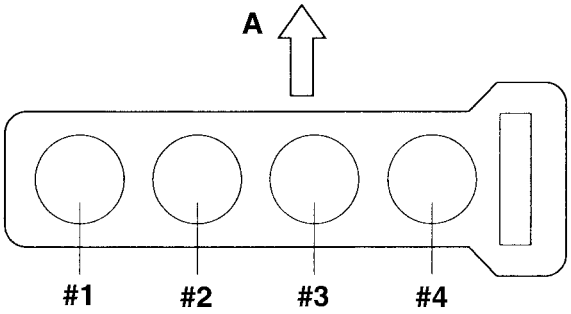

A. Front

▲▲▲▲▲▲▲▲▲▲▲▲▲▲▲▲▲▲▲▲▲▲▲▲▲▲▲▲▲▲

5. Remove:
   - Camshafts

TIP
- Refer to “CAMSHAFTS” on page 5-13.
- When removing the timing chain and camshafts, fasten the timing chain with a wire to retrieve it if it falls into the crankcase.

6. Adjust:
   - Valve clearance

▼▼▼▼▼▼▼▼▼▼▼▼▼▼▼▼▼▼▼▼▼▼▼▼▼▼▼▼▼▼▼▼▼▼

a. Remove the valve lifter “1” and the valve pad “2” with a valve lapper “3”.

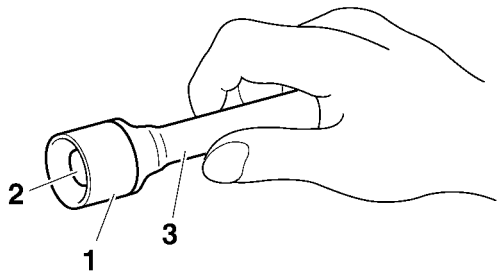

Valve lapper
90890-04101
Valve lapping tool
YM-A8998

TIP

- Cover the timing chain opening with a rag to prevent the valve pad from falling into the crankcase.
- Make a note of the position of each valve lifter “1” and valve pad “2” so that they can be installed in the correct place.

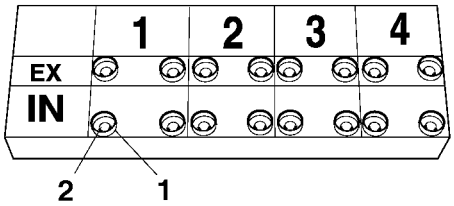

b. Select the proper valve pad from the following table.

Valve pad range	Nos. 120–240
Valve pad thickness	1.20–2.40 mm (0.0472–0.0945 in)
Available valve pads	38 thicknesses in 0.05 mm (0.002 in) increments

TIP

- The thickness “a” of each valve pad is marked in hundredths of millimeters on the side that touches the valve lifter.
- Since valve pads of various sizes are originally installed, the valve pad number must be rounded in order to reach the closest equivalent to the original.

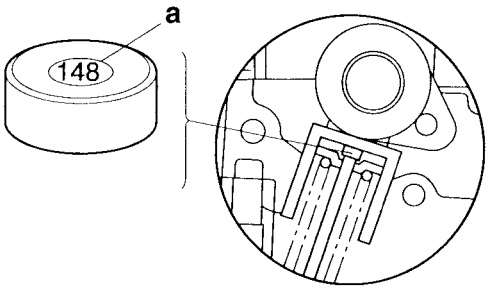

c. Round off the original valve pad number according to the following table.

Last digit	Rounded value
0 or 2	0
5	5
8	10

EXAMPLE:
Original valve pad number = 148 (thickness = 1.48 mm (0.058 in))
Rounded value = 150

d. Locate the rounded number of the original valve pad and the measured valve clearance in the valve pad selection table. The point where the column and row intersect is the new valve pad number.

TIP

The new valve pad number is only an approximation. The valve clearance must be measured again and the above steps should be repeated if the measurement is still incorrect.

e. Install the new valve pad “1” and the valve lifter “2”.

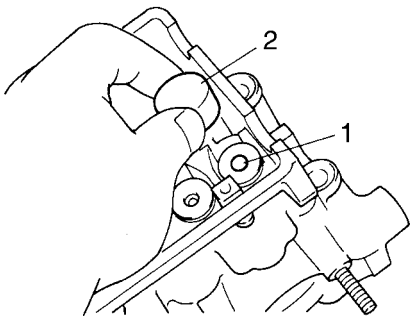

TIP
- Lubricate the valve pad with molybdenum disulfide oil.
- Lubricate the valve lifter with engine oil.
- The valve lifter must turn smoothly when rotated by hand.
- Install the valve lifter and the valve pad in the correct place.

f. Install the exhaust and intake camshafts, timing chain and camshaft caps.

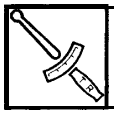

Camshaft cap bolt
10 Nm (1.0 m·kgf, 7.2 ft·lbf)

TIP
- Refer to “CAMSHAFTS” on page 5-13.
- Lubricate the camshaft lobes and camshaft journals.
- First, install the exhaust camshaft.
- Align the camshaft marks with the camshaft cap marks.
- Turn the crankshaft counterclockwise several full turns to seat the parts.

g. Measure the valve clearance again.
h. If the valve clearance is still out of specification, repeat all of the valve clearance adjustment steps until the specified clearance is obtained.

▲▲▲▲▲▲▲▲▲▲▲▲▲▲▲▲▲▲▲▲▲▲▲▲▲▲▲▲▲▲▲▲

7. Install:
   - All removed parts

TIP
For installation, reverse the removal procedure.

EAS20571
SYNCHRONIZING THE THROTTLE BODIES

TIP
Before synchronizing the throttle bodies, check the following items:
- Valve clearance
- Spark plugs
- Air filter element
- Throttle body joints
- Fuel hoses
- Air induction system
- Exhaust system
- Breather hoses

Checking the throttle body synchronization

1. Stand the vehicle on a level surface.

TIP
Place the vehicle on a suitable stand.

2. Remove:
   - Rider seat
     Refer to “GENERAL CHASSIS” on page 4-1.
   - Fuel tank side covers
   - Fuel tank
     Refer to “FUEL TANK” on page 7-1.
   - Air filter case
     Refer to “AIR FILTER CASE” on page 7-5.
3. Remove:
   - Caps “1”

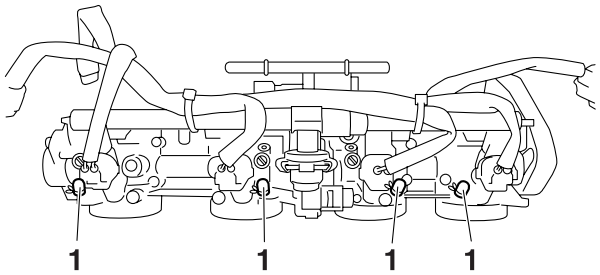

4. Install:
   - Vacuum gauge “1”
   - Digital tachometer

Vacuum gauge
90890-03094
Carburetor synchronizer
YU-44456
Digital tachometer
90890-06760
YU-39951-B

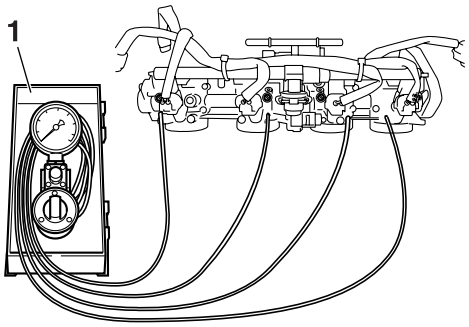

5. Install:
   - Air filter case
     Refer to “AIR FILTER CASE” on page 7-5.

- Fuel tank
  Refer to “FUEL TANK” on page 7-1.

6. Check:
   - Throttle body synchronization

▼▼▼▼▼▼▼▼▼▼▼▼▼▼▼▼▼▼▼▼▼▼▼▼▼▼▼▼▼▼▼▼▼▼

a. Start the engine, warm it up for several minutes, and then let it run at the specified engine idling speed.

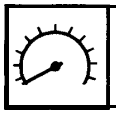	**Engine idling speed** **1150–1250 r/min**

b. Check the vacuum pressure.

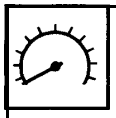	**The difference in vacuum pressure between the throttle bodies should not exceed 1.33 kPa (10 mmHg).**

TIP

Only #2 is set 1.6 kPa (12 mmHg, 0.49 inHg) higher.

If out of specification → Adjust the throttle body synchronization.

▲▲▲▲▲▲▲▲▲▲▲▲▲▲▲▲▲▲▲▲▲▲▲▲▲▲▲▲▲▲▲▲▲▲

Adjusting the throttle body synchronization

1. Adjust:
   - Throttle body synchronization

▼▼▼▼▼▼▼▼▼▼▼▼▼▼▼▼▼▼▼▼▼▼▼▼▼▼▼▼▼▼▼▼▼▼

a. Start the engine, warm it up for several minutes, and then let it run at the specified engine idling speed.

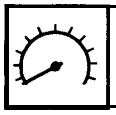	**Engine idling speed** **1150–1250 r/min**

b. Using the throttle body that has the bypass air screw “1” with a white paint mark as the standard, adjust the other throttle bodies by turning their bypass air screws in or out.

ECA14B4005

NOTICE

Do not turn the bypass air screw of the throttle body that is the standard. Otherwise, the engine may run roughly at idle and the throttle bodies may not operate properly.

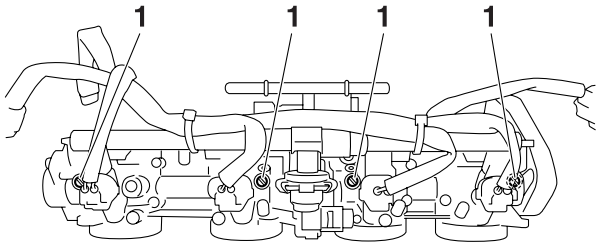

TIP

- After each step, rev the engine two or three times, each time for less than a second, and check the synchronization again.
- If a bypass air screw was removed, clean or replace the throttle bodies.
- The difference in vacuum pressure between the throttle bodies should not exceed 1.33 kPa (10 mmHg).
- Adjust only #2 1.6 kPa (12 mmHg, 0.49 inHg) higher.

▲▲▲▲▲▲▲▲▲▲▲▲▲▲▲▲▲▲▲▲▲▲▲▲▲▲▲▲▲▲▲▲▲▲

2. Stop the engine and remove the measuring equipment.
3. Adjust:
   - Throttle cable free play
     Refer to “ADJUSTING THE THROTTLE CABLE FREE PLAY” on page 3-32.

	**Throttle cable free play** **3.0–5.0 mm (0.12–0.20 in)**

4. Install:
   - Fuel tank
   - Fuel tank side cover
     Refer to “FUEL TANK” on page 7-1.
   - Rider seat
     Refer to “GENERAL CHASSIS” on page 4-1.

EAS21010

CHECKING THE THROTTLE BODY JOINTS

The following procedure applies to all of the throttle body joints and intake manifolds.

1. Remove:
   - Throttle bodies
     Refer to “THROTTLE BODIES” on page 7-11.
2. Check:
   - Throttle body joints “1”
     Cracks/damage → Replace.

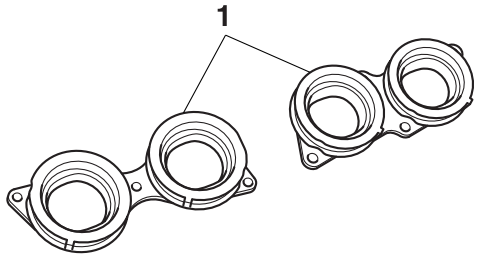

3. Install:
   - Throttle bodies
     Refer to “THROTTLE BODIES” on page 7-11.

EAS21070
CHECKING THE CRANKCASE BREATHER HOSE

1. Remove:
   - Rider seat
     Refer to “GENERAL CHASSIS” on page 4-1.
2. Remove:
   - Fuel tank
     Refer to “FUEL TANK” on page 7-1.
3. Check:
   - Crankcase breather hose “1”
     Cracks/damage → Replace.
     Loose connection → Connect properly.

ECA13450
NOTICE

Make sure the crankcase breather hose is routed correctly.

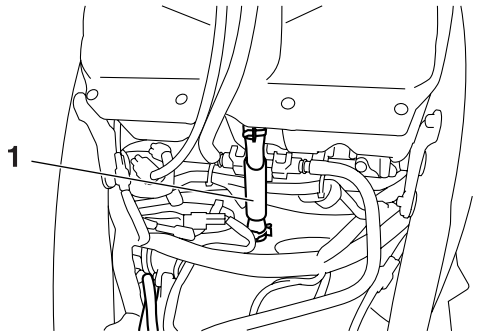

4. Install:
   - Fuel tank
     Refer to “FUEL TANK” on page 7-1.
5. Install:
   - Rider seat
     Refer to “GENERAL CHASSIS” on page 4-1.

EAS21080
CHECKING THE EXHAUST SYSTEM

The following procedure applies to all of the exhaust pipes and gaskets.

1. Remove:
   - Rider seat
     Refer to “GENERAL CHASSIS” on page 4-1.
2. Remove:
   - Passenger seat
     Refer to “GENERAL CHASSIS” on page 4-1.
3. Remove:
   - Side cowlings
     Refer to “GENERAL CHASSIS” on page 4-1.
4. Remove:
   - Rear brake master cylinder
     Refer to “REAR BRAKE” on page 4-43.
5. Remove:
   - Radiator lower bracket
     Refer to “RADIATOR” on page 6-1.
6. Check:
   - Exhaust pipe “1”
   - Exhaust chamber “2”
   - Mufflers “3”
     Cracks/damage → Replace.
   - Gaskets “4”
     Exhaust gas leaks → Replace.
7. Check:
   - Tightening torque

Exhaust pipe nut
20 Nm (2.0 m·kgf, 14 ft·lbf)
Exhaust pipe and exhaust chamber clamp bolt
10 Nm (1.0 m·kgf, 7.2 ft·lbf)
Exhaust pipe and exhaust pipe stay bolt
20 Nm (2.0 m·kgf, 14 ft·lbf)
Exhaust chamber bracket bolt
20 Nm (2.0 m·kgf, 14 ft·lbf)
Exhaust chamber bolt
20 Nm (2.0 m·kgf, 14 ft·lbf)
Exhaust chamber and left muffler bolt
20 Nm (2.0 m·kgf, 14 ft·lbf)
Exhaust chamber and right muffler bolt
20 Nm (2.0 m·kgf, 14 ft·lbf)
Left muffler and frame bolt
23 Nm (2.3 m·kgf, 17 ft·lbf)
Right muffler and frame bolt
23 Nm (2.3 m·kgf, 17 ft·lbf)

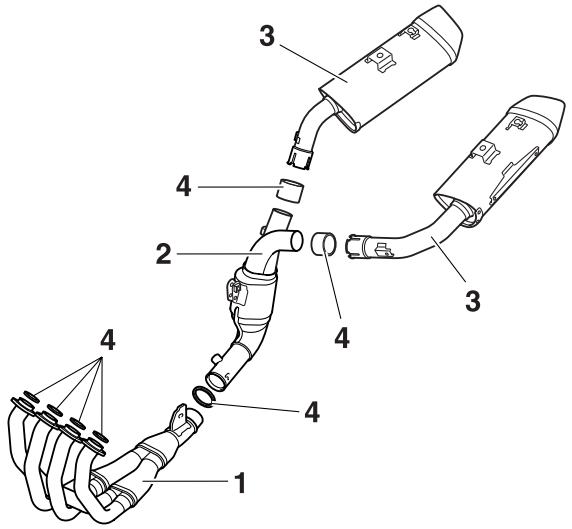

8. Install:
   - Radiator lower bracket
     Refer to “RADIATOR” on page 6-1.
9. Install:
   - Rear brake master cylinder
     Refer to “REAR BRAKE” on page 4-43.
10. Install:
    - Side cowlings
      Refer to “GENERAL CHASSIS” on page 4-1.
11. Install:
    - Passenger seat
      Refer to “GENERAL CHASSIS” on page 4-1.
12. Install:
    - Rider seat
      Refer to “GENERAL CHASSIS” on page 4-1.

EAS14B1099

CHECKING THE AIR INDUCTION SYSTEM

Refer to “CHECKING THE AIR INDUCTION SYSTEM” on page 7-25.

EAS20961

REPLACING THE AIR FILTER ELEMENT

1. Remove:
   - Rider seat
     Refer to “GENERAL CHASSIS” on page 4-1.
2. Remove:
   - Fuel tank
     Refer to “FUEL TANK” on page 7-1.
3. Remove:
   - Air filter case cover
     Refer to “AIR FILTER CASE” on page 7-5.
4. Check:
   - Air filter element “1”
   - Air filter seal
     Damage → Replace.

TIP

- Replace the air filter element every 40000 km (24000 mi) of operation.
- The air filter needs more frequent service if you are riding in unusually wet or dusty areas.

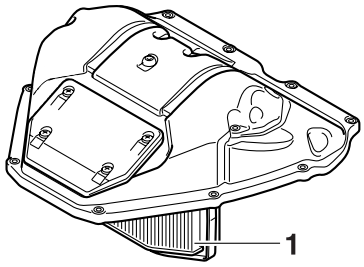

5. Install:
   - Air filter element
     Refer to “AIR FILTER CASE” on page 7-5.
6. Install:
   - Air filter case cover
     Refer to “AIR FILTER CASE” on page 7-5.

ECA14401

NOTICE

Never operate the engine without the air filter element installed. Unfiltered air will cause rapid wear of engine parts and may damage the engine. Operating the engine without the air filter element will also affect carburetor synchronization, leading to poor engine performance and possible overheating.

TIP

When installing the air filter element into the air filter case cover, make sure that the sealing surfaces are aligned to prevent any air leaks.

7. Install:
   - Fuel tank
     Refer to “FUEL TANK” on page 7-1.
8. Install:
   - Rider seat
     Refer to “GENERAL CHASSIS” on page 4-1.

EAS20870
ADJUSTING THE CLUTCH CABLE FREE PLAY

1. Check:
   - Clutch cable free play “a”
     Out of specification → Adjust.

Clutch lever free play
10.0–15.0 mm (0.39–0.59 in)

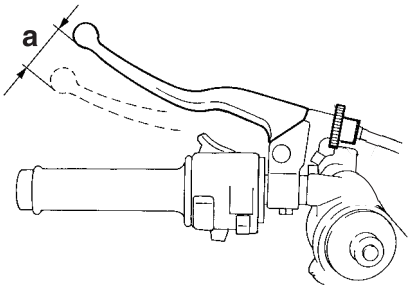

2. Adjust:
   - Clutch cable free play

▼▼▼▼▼▼▼▼▼▼▼▼▼▼▼▼▼▼▼▼▼▼▼▼▼▼▼▼▼▼▼▼

Handlebar side

a. Turn the adjusting dial “1” in direction “a” or “b” until the specified clutch lever free play is obtained.

Direction “a”
Clutch cable free play is increased.
Direction “b”
Clutch cable free play is decreased.

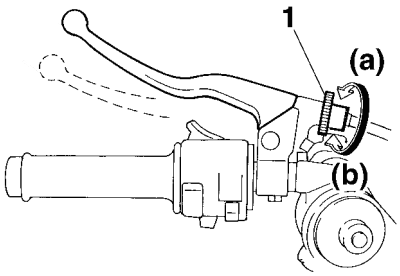

TIP
If the specified clutch cable free play cannot be obtained on the handlebar side of the cable, use the adjusting nut on the engine side.

▲▲▲▲▲▲▲▲▲▲▲▲▲▲▲▲▲▲▲▲▲▲▲▲▲▲▲▲▲▲▲▲
▼▼▼▼▼▼▼▼▼▼▼▼▼▼▼▼▼▼▼▼▼▼▼▼▼▼▼▼▼▼▼▼

Engine side

a. Loosen the locknuts “1”.

b. Turn the adjusting bolt “2” in direction “a” or “b” until the specified clutch cable free play is obtained.

Direction “a”
Clutch cable free play is increased.
Direction “b”
Clutch cable free play is decreased.

c. Tighten the locknuts “1”.

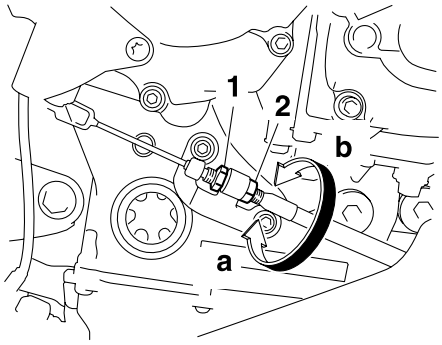

▲▲▲▲▲▲▲▲▲▲▲▲▲▲▲▲▲▲▲▲▲▲▲▲▲▲▲▲▲▲▲▲

EAS14B1088
CHECKING THE BRAKE OPERATION

1. Check:
   - Brake operation
     Brake not working properly → Check the brake system.
     Refer to “FRONT BRAKE” on page 4-30 and “REAR BRAKE” on page 4-43.

TIP
Drive on the dry road, operate the front and rear brakes separately and check to see if the brakes are operating fully.

EAS21240
CHECKING THE BRAKE FLUID LEVEL

1. Stand the vehicle on a level surface.

TIP
- Place the vehicle on a suitable stand.
- Make sure the vehicle is upright.

2. Check:
   - Brake fluid level
     Below the minimum level mark “a” → Add the recommended brake fluid to the proper level.

Recommended fluid
DOT 4

A

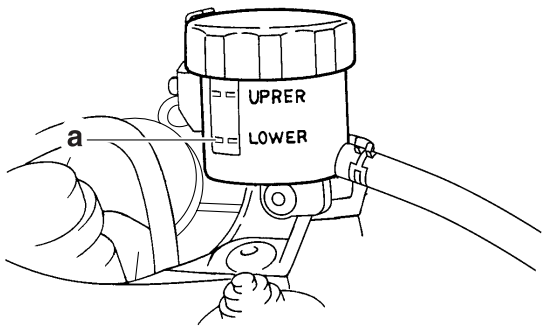

B

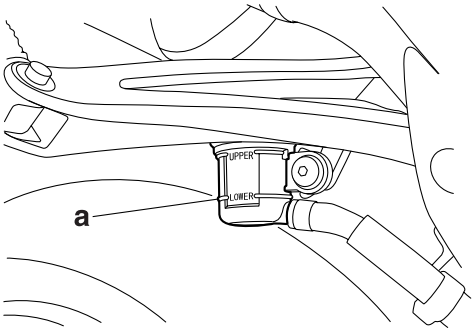

A. Front brake
B. Rear brake

EWA13090

WARNING

- **Use only the designated brake fluid. Other brake fluids may cause the rubber seals to deteriorate, causing leakage and poor brake performance.**
- **Refill with the same type of brake fluid that is already in the system. Mixing brake fluids may result in a harmful chemical reaction, leading to poor brake performance.**
- **When refilling, be careful that water does not enter the brake fluid reservoir. Water will significantly lower the boiling point of the brake fluid and could cause vapor lock.**

ECA13540

NOTICE

Brake fluid may damage painted surfaces and plastic parts. Therefore, always clean up any spilt brake fluid immediately.

TIP

In order to ensure a correct reading of the brake fluid level, make sure the top of the brake fluid reservoir is horizontal.

EAS21160

ADJUSTING THE FRONT DISC BRAKE

1. Adjust:
   - Brake lever position
     (distance “a” from the throttle grip to the brake lever)

TIP

While pushing the brake lever forward, turn the adjusting dial “1” until the brake lever is in the desired position.

Direction “b”
Brake lever distance “a” is increased.
Direction “c”
Brake lever distance “a” is decreased.

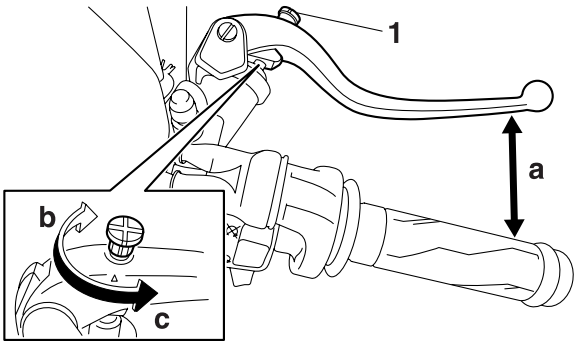

EWA13060

WARNING

- **After adjusting the brake lever position, make sure the pin on the brake lever holder is firmly inserted in the hole in the adjusting dial.**
- **A soft or spongy feeling in the brake lever can indicate the presence of air in the brake system. Before the vehicle is operated, the air must be removed by bleeding the brake system. Air in the brake system will considerably reduce in loss of control and possibly an accident. Therefore, check and if necessary, bleed the brake system.**

ECA13490

NOTICE

After adjusting the brake lever position, make sure there is no brake drag.

EAS21250

CHECKING THE FRONT BRAKE PADS

The following procedure applies to all of the brake pads.

1. Operate the brake.

2. Check:
   - Front brake pad
     Wear indicators “1” almost touch the brake disc → Replace the brake pads as a set.
     Refer to “FRONT BRAKE” on page 4-30.

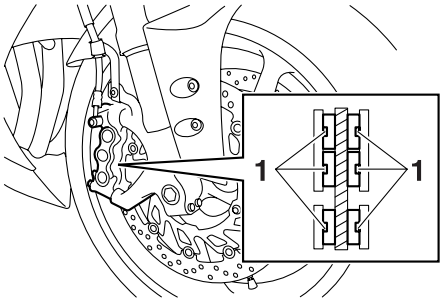

EAS21190
ADJUSTING THE REAR DISC BRAKE

1. Check:
   - Brake pedal position
     (distance “a” from the center of the foot-rest bracket bolt to the center of the brake pedal)
     Out of specification → Adjust.

	Brake pedal position **12–21 mm (0.47–0.83 in)**

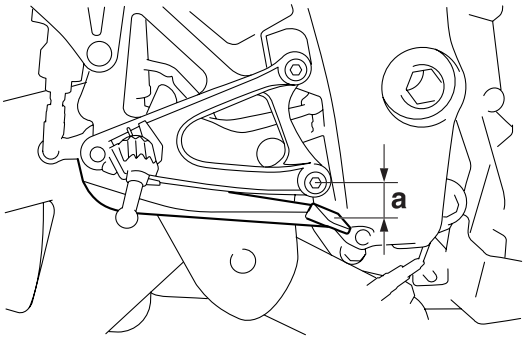

2. Adjust:
   - Brake pedal position

▼▼▼▼▼▼▼▼▼▼▼▼▼▼▼▼▼▼▼▼▼▼▼▼▼▼▼▼▼▼▼▼▼▼

a. Loosen the locknut “1”.
b. Turn the adjusting bolt “2” in direction “a” or “b” until the specified brake pedal position is obtained.

Direction “a” **Brake pedal is raised.** **Direction “b”** **Brake pedal is lowered.**

EWA13070

WARNING

After adjusting the brake pedal position, check that the end of the adjusting bolt “c” is visible through the hole “d”.

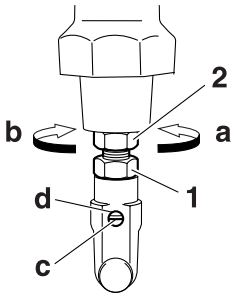

c. Tighten the locknut “1” to specification.

	Locknut **16 Nm (1.6 m·kgf, 11 ft·lbf)**

EWA13050

WARNING

A soft or spongy feeling in the brake lever can indicate the presence of air in the brake system. Before the vehicle is operated, the air must be removed by bleeding the brake system. Air in the brake system will considerably reduce braking performance.

ECA13510

NOTICE

After adjusting the brake pedal position, make sure there is no brake drag.

▲▲▲▲▲▲▲▲▲▲▲▲▲▲▲▲▲▲▲▲▲▲▲▲▲▲▲▲▲▲▲▲▲▲

3. Adjust:
   - Rear brake light switch
     Refer to “ADJUSTING THE REAR BRAKE LIGHT SWITCH” on page 3-32.

EAS21260
CHECKING THE REAR BRAKE PADS

The following procedure applies to all of the brake pads.

1. Operate the brake.
2. Check:
   - Rear brake pad
     Wear indicators “1” almost touch the brake disc → Replace the brake pads as a set.
     Refer to “REAR BRAKE” on page 4-43.

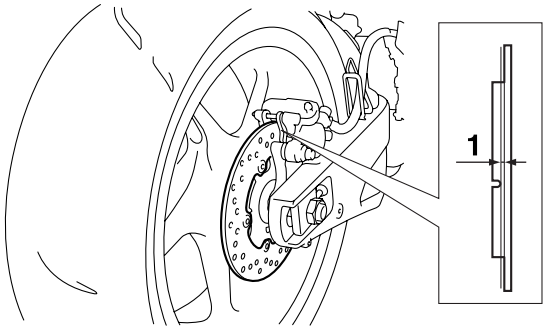

EAS21360
BLEEDING THE HYDRAULIC BRAKE SYSTEM

EWA13100

WARNING

Bleed the hydraulic brake system whenever:
- **the system is disassembled.**
- **a brake hose is loosened, disconnected or replaced.**
- **the brake fluid level is very low.**
- **brake operation is faulty.**

TIP
- Be careful not to spill any brake fluid or allow the brake fluid reservoir to overflow.
- When bleeding the hydraulic brake system, make sure there is always enough brake fluid before applying the brake. Ignoring this precaution could allow air to enter the hydraulic brake system, considerably lengthening the bleeding procedure.
- If bleeding is difficult, it may be necessary to let the brake fluid settle for a few hours. Repeat the bleeding procedure when the tiny bubbles in the hose have disappeared.

1. Bleed:
   - Hydraulic brake system

▼▼▼▼▼▼▼▼▼▼▼▼▼▼▼▼▼▼▼▼▼▼▼▼▼▼▼▼▼▼▼▼▼▼

a. Fill the brake fluid reservoir to the proper level with the recommended brake fluid.
b. Install the brake fluid reservoir diaphragm.
c. Connect a clear plastic hose “1” tightly to the bleed screw “2”.

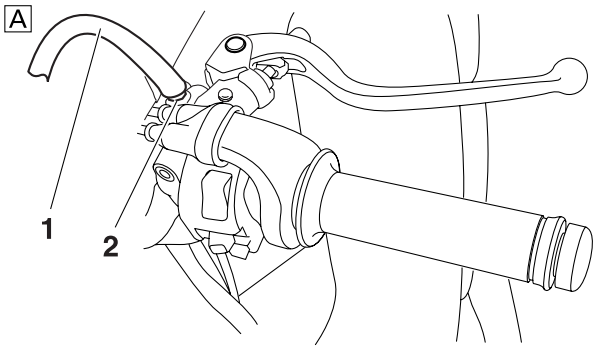

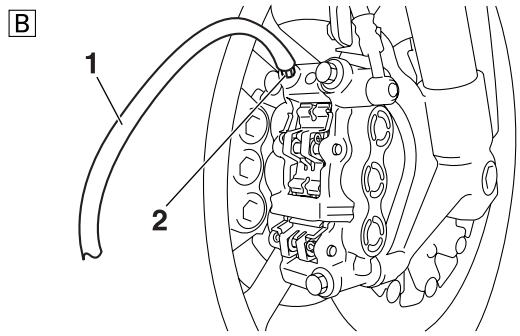

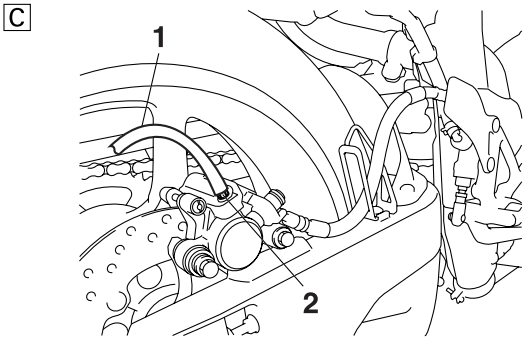

A. Front brake master cylinder
B. Front brake caliper
C. Rear brake caliper

TIP

Bleeding order of the front hydraulic brake system is the following order:
- Front brake master cylinder
- Front brake calipers
- Front brake master cylinder

d. Place the other end of the hose into a container.
e. Slowly apply the brake several times.
f. Fully pull the brake lever or fully press down the brake pedal and hold it in position.
g. Loosen the bleed screw.

TIP

Loosening the bleed screw will release the pressure and cause the brake lever to contact

the throttle grip or the brake pedal to fully extend.

h. Tighten the bleed screw and then release the brake lever or brake pedal.
i. Repeat steps (e) to (h) until all of the air bubbles have disappeared from the brake fluid in the plastic hose.
j. Tighten the bleed screw to specification.

Brake caliper bleed screw
5 Nm (0.5 m·kgf, 3.6 ft·lbf)
Master cylinder bleed screw
6 Nm (0.6 m·kgf, 4.3 ft·lbf)

k. Fill the brake fluid reservoir to the proper level with the recommended brake fluid. Refer to “CHECKING THE BRAKE FLUID LEVEL” on page 3-13.

EWA13110

WARNING

After bleeding the hydraulic brake system, check the brake operation.

▲▲▲▲▲▲▲▲▲▲▲▲▲▲▲▲▲▲▲▲▲▲▲▲▲▲▲▲▲▲

EAS21280

CHECKING THE FRONT BRAKE HOSES

The following procedure applies to all of the brake hoses and brake hose clamps.

1. Check:
   - Brake hose “1”
     Cracks/damage/wear → Replace.
2. Check:
   - Brake hose clamp “2”
     Loose → Tighten the clamp bolt.

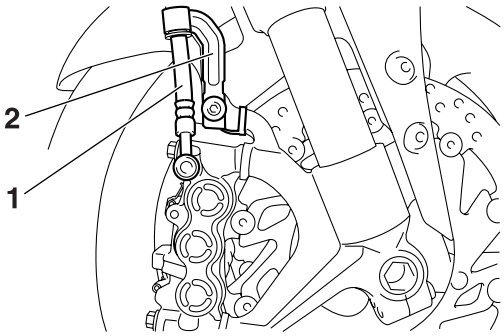

3. Hold the vehicle upright and apply the brake several times.
4. Check:
   - Brake hose
     Brake fluid leakage → Replace the damaged hose.
     Refer to “FRONT BRAKE” on page 4-30.

EAS21290

CHECKING THE REAR BRAKE HOSE

1. Check:
   - Brake hose “1”
     Cracks/damage/wear → Replace.
2. Check:
   - Brake hose clamp “2”
     Loose Connection → Tighten the clamp bolt.

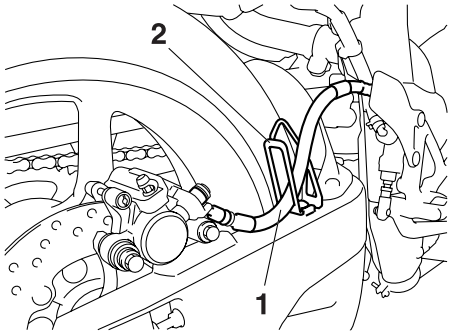

3. Hold the vehicle upright and apply the front brake several times.
4. Check:
   - Brake hose
     Brake fluid leakage → Replace the damaged hose.
     Refer to “REAR BRAKE” on page 4-43.

EAS21670

CHECKING THE WHEELS

The following procedure applies to both of the wheels.

1. Check:
   - Wheel
     Damage/out-of-round → Replace.

EWA13260

WARNING

Never attempt to make any repairs to the wheel.

TIP

After a tire or wheel has been changed or replaced, always balance the wheel.

EAS21650

CHECKING THE TIRES

The following procedure applies to both of the tires.

1. Check:
   - Tire pressure
     Out of specification → Regulate.

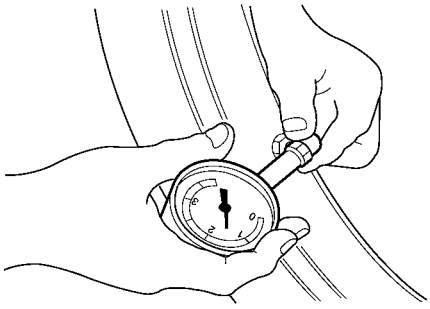

EWA13180

WARNING

- **The tire pressure should only be checked and regulated when the tire temperature equals the ambient air temperature.**
- **The tire pressure and the suspension must be adjusted according to the total weight (including cargo, rider, passenger and accessories) and the anticipated riding speed.**
- **Operation of an overloaded vehicle could cause tire damage, an accident or an injury.**

NEVER OVERLOAD THE VEHICLE.

Tire air pressure (measured on cold tires)

Loading condition
0–90 kg (0–198 lb)
Front
250 kPa (2.50 kgf/cm², 36 psi, 2.50 bar)
Rear
290 kPa (2.90 kgf/cm², 42 psi, 2.90 bar)
Loading condition
90–189 kg (198–417 lb)
Front
250 kPa (2.50 kgf/cm², 36 psi, 2.50 bar)
Rear
290 kPa (2.90 kgf/cm², 42 psi, 2.90 bar)
High-speed riding
Front
250 kPa (2.50 kgf/cm², 36 psi, 2.50 bar)
Rear
290 kPa (2.90 kgf/cm², 42 psi, 2.90 bar)
Maximum load
189 kg (417 lb)

*** Total weight of rider, passenger, cargo and accessories**

EWA13190

WARNING

It is dangerous to ride with a worn-out tire. When the tire tread reaches the wear limit, replace the tire immediately.

2. Check:
   - Tire surfaces
     Damage/wear → Replace the tire.

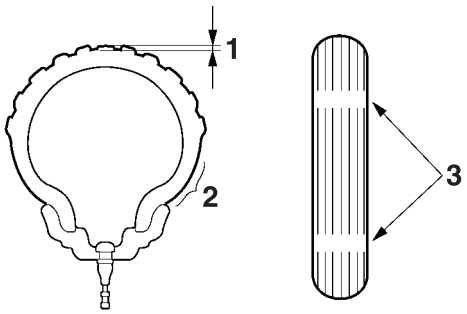

1. Tire tread depth
2. Side wall
3. Wear indicator

Wear limit (front)
1.0 mm (0.04 in)
Wear limit (rear)
1.0 mm (0.04 in)

EWA14090

WARNING

After extensive tests, the tires listed below have been approved by Yamaha Motor Co., Ltd. for this model. The front and rear tires should always be by the same manufacturer and of the same design. No guarantee concerning handling characteristics can be given if a tire combination other than one approved by Yamaha is used on this vehicle.

Front tire
Size
120/70 ZR17M/C (58W)
Manufacturer/model
DUNLOP/D210F

Rear tire
Size
190/55 ZR17M/C (75W)
Manufacturer/model
DUNLOP/D21

EWA13210

WARNING

New tires have a relatively low grip on the road surface until they have been slightly worn. Therefore, approximately 100 km should be traveled at normal speed before any high-speed riding is done.

TIP

For tires with a direction of rotation mark “1”:
- Install the tire with the mark pointing in the direction of wheel rotation.
- Align the mark “2” with the valve installation point.

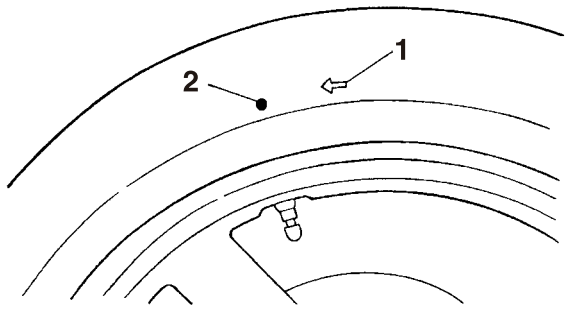

EAS14B1089

CHECKING THE WHEEL BEARINGS

The following procedure applies to all of the wheel bearings.

1. Check:
   - Wheel bearings
     Refer to “CHECKING THE FRONT WHEEL” on page 4-20 and “CHECKING THE REAR WHEEL” on page 4-27.

EAS14B1090

CHECKING THE SWINGARM OPERATION

1. Check:
   - Swingarm operation
     Swingarm not working properly → Check the swingarm.
     Refer to “SWINGARM” on page 4-79.
2. Check:
   - Swingarm excessive play
     Refer to “SWINGARM” on page 4-79.

EAS21390

ADJUSTING THE DRIVE CHAIN SLACK

TIP

The drive chain slack must be checked at the tightest point on the chain.

ECA13550

NOTICE

A drive chain that is too tight will overload the engine and other vital parts, and one that is too loose can skip and damage the swingarm or cause an accident. Therefore, keep the drive chain slack within the specified limits.

1. Stand the vehicle on a level surface.

EWA13120

WARNING

Securely support the vehicle so that there is no danger of it falling over.

TIP
Place the vehicle on a suitable stand so that the rear wheel is elevated.

2. Move the rear wheel several times and find the tightest position of drive chain.
3. Check:
   - Drive chain slack “a”
     Out of specification → Adjust.

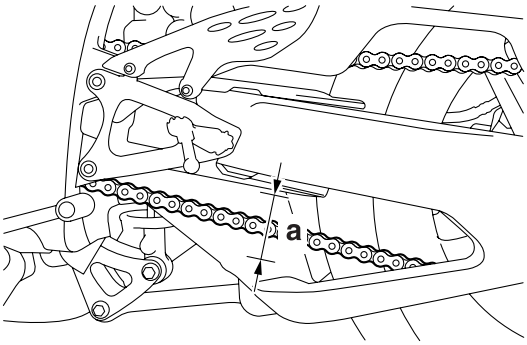

Drive chain slack (when adjusting the drive chain)
25.0–35.0 mm (0.98–1.38 in)
Drive chain slack (when replacing the drive chain and sprocket)
20.0–30.0 mm (0.79–1.18 in)

4. Loosen:
   - Wheel axle nut “1”

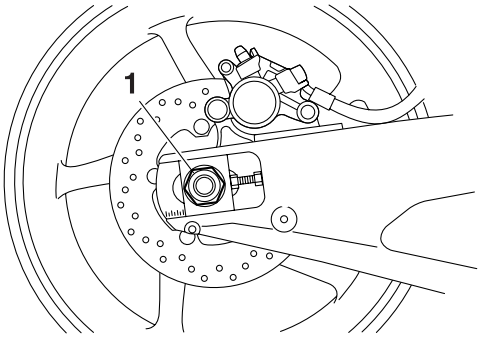

5. Adjust:
   - Drive chain slack

▼▼▼▼▼▼▼▼▼▼▼▼▼▼▼▼▼▼▼▼▼▼▼▼▼▼▼▼▼▼▼▼▼▼

a. Loosen both locknuts “1”.
b. Turn both adjusting bolts “2” in direction “a” or “b” until the specified drive chain slack is obtained.

Direction “a”
Drive chain is tightened.
Direction “b”
Drive chain is loosened.

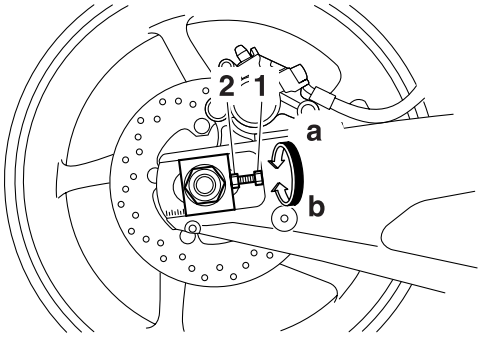

TIP
To maintain the proper wheel alignment, adjust both sides evenly.

c. Tighten the wheel axle nut to specification.

Wheel axle nut
150 Nm (15 m·kgf, 110 ft·lbf)

d. Tighten the locknuts to specification.

Locknut
16 Nm (1.6 m·kgf, 11 ft·lbf)

▲▲▲▲▲▲▲▲▲▲▲▲▲▲▲▲▲▲▲▲▲▲▲▲▲▲▲▲▲▲▲▲▲▲

EAS21440
LUBRICATING THE DRIVE CHAIN

The drive chain consists of many interacting parts. If the drive chain is not maintained properly, it will wear out quickly. Therefore, the drive chain should be serviced, especially when the vehicle is used in dusty areas.
This vehicle has a drive chain with small rubber O-rings between each side plate. Steam cleaning, high-pressure washing, certain solvents, and the use of a coarse brush can damage these O-rings. Therefore, use only kerosene to clean the drive chain. Wipe the drive chain dry and thoroughly lubricate it with engine oil or chain lubricant that is suitable for O-ring chains. Do not use any other lubricants on the drive chain since they may contain solvents that could damage the O-rings.

Recommended lubricant
Chain lubricant suitable for O-ring chains

EAS21500
CHECKING AND ADJUSTING THE STEERING HEAD

1. Stand the vehicle on a level surface.

EWA13120

WARNING

Securely support the vehicle so that there is no danger of it falling over.

TIP

Place the vehicle on a suitable stand so that the front wheel is elevated.

2. Check:
   - Steering head
     Grasp the bottom of the front fork legs and gently rock the front fork.
     Binding/looseness → Adjust the steering head.
3. Remove:
   - Upper bracket
     Refer to "HANDLEBARS" on page 4-55 and "STEERING HEAD" on page 4-71.
4. Adjust:
   - Steering head

▼▼▼▼▼▼▼▼▼▼▼▼▼▼▼▼▼▼▼▼▼▼▼▼▼▼▼▼▼▼▼▼▼▼

a. Remove the lock washer "1", the upper ring nut "2", and the rubber washer "3".

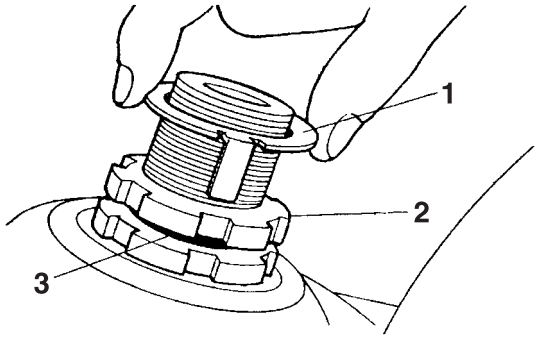

b. Loosen the lower ring nut "4" and then tighten it to specification with a steering nut wrench "5".

TIP

Set the torque wrench at a right angle to the steering nut wrench.

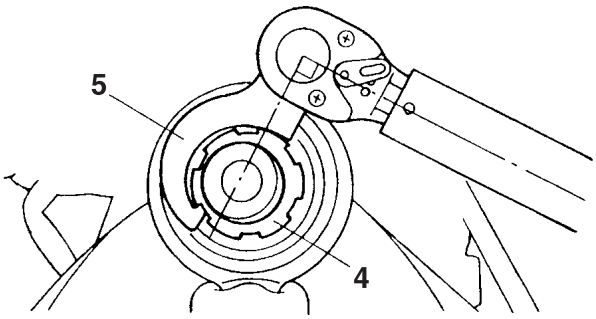

Steering nut wrench
90890-01403
Exhaust flange nut wrench
YU-A9472

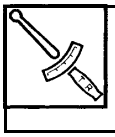

Lower ring nut (initial tightening torque)
52 Nm (5.2 m·kgf, 37 ft·lbf)

c. Loosen the lower ring nut "6" completely, then tighten it to specification.

EWA13140

WARNING

Do not overtighten the lower ring nut.

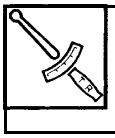

Lower ring nut (final tightening torque)
18 Nm (1.8 m·kgf, 13 ft·lbf)

d. Check the steering head for looseness or binding by turning the front fork all the way in both directions. If any binding is felt, remove the lower bracket and check the upper and lower bearings.
   Refer to "STEERING HEAD" on page 4-71.
e. Install the rubber washer "7".
f. Install the upper ring nut "8".
g. Finger tighten the upper ring nut, then align the slots of both ring nuts. If necessary, hold the lower ring nut and tighten the upper ring nut until their slots are aligned.
h. Install the lock washer.

TIP

Make sure the lock washer tabs "a" sit correctly in the ring nut slots "b".

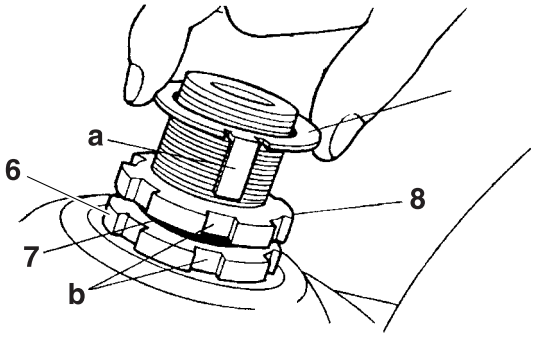

▲▲▲▲▲▲▲▲▲▲▲▲▲▲▲▲▲▲▲▲▲▲▲▲▲▲▲▲▲▲▲▲▲▲

5. Install:
   - Upper bracket
     Refer to "HANDLEBARS" on page 4-55.

EAS14B1092
CHECKING THE STEERING DAMPER
Refer to “CHECKING THE STEERING DAMPER” on page 4-74.

EAS14B1093
CHECKING THE CHASSIS FASTENERS
Make sure that all nuts, bolts, and screws are properly tightened.
Refer to “CHASSIS TIGHTENING TORQUES” on page 2-20.

EAS21700
LUBRICATING THE BRAKE LEVER
Lubricate the pivoting point and metal-to-metal moving parts of the levers.

Recommended lubricant
Silicone grease

EAS14B1100
LUBRICATING THE CLUTCH LEVER
Lubricate the pivoting point and metal-to-metal moving parts of the levers.

Recommended lubricant
Lithium-soap-based grease

EAS21710
LUBRICATING THE PEDAL
Lubricate the pivoting point and metal-to-metal moving parts of the pedal.

Recommended lubricant
Lithium-soap-based grease

EAS21380
ADJUSTING THE SHIFT PEDAL

TIP
The shift pedal position is determined by the installed shift rod length “a”.

1. Measure:
   - Installed shift rod length “a”
     Incorrect → Adjust.

Installed shift rod length
262.5–265.5 mm (10.33–10.45 in)

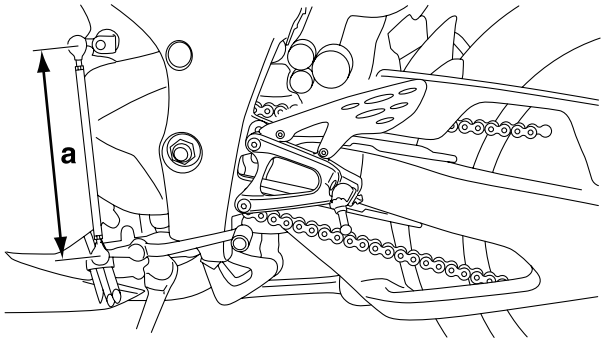

2. Adjust:
   - Installed shift rod length

▼▼▼▼▼▼▼▼▼▼▼▼▼▼▼▼▼▼▼▼▼▼▼▼▼▼▼▼▼▼▼▼

a. Loosen both locknuts “1”.
b. Turn the shift rod “2” in direction “a” or “b” to obtain the correct shift pedal position.

Direction “a”
Installed shift rod length increases.
Direction “b”
Installed shift rod length decreases.

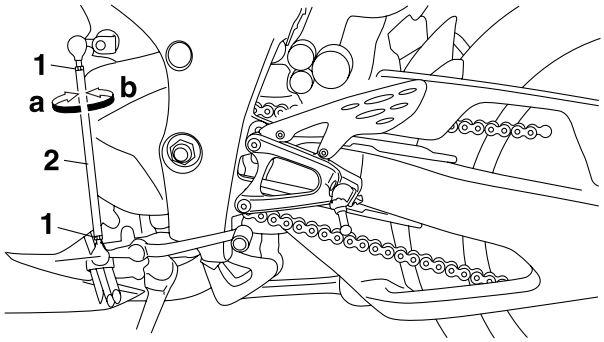

c. Tighten both locknuts.
d. Make sure the installed shift rod length is within specification.

▲▲▲▲▲▲▲▲▲▲▲▲▲▲▲▲▲▲▲▲▲▲▲▲▲▲▲▲▲▲▲▲

EAS14B1094
CHECKING THE SIDESTAND
1. Stand the vehicle on a level surface.

EWA13120
WARNING
Securely support the vehicle so that there is no danger of it falling over.

TIP
Place the vehicle on a suitable stand so that the sidestand is elevated.

2. Check:
   Unsmooth operation → Replace the defective part(s).

EAS21720
LUBRICATING THE SIDESTAND
Lubricate the pivoting point and metal-to-metal moving parts of the sidestand.

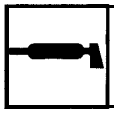	**Recommended lubricant** **Lithium-soap-based grease**

EAS14B1095
CHECKING THE SIDESTAND SWITCH
Refer to “ELECTRICAL COMPONENTS” on page 8-101.

EAS21530
CHECKING THE FRONT FORK
1. Stand the vehicle on a level surface.

EWA13120
WARNING

Securely support the vehicle so that there is no danger of it falling over.

2. Check:
   - Inner tube
     Damage/scratches → Replace.
   - Oil seal
     Oil leakage → Replace.
3. Hold the vehicle upright and apply the front brake.
4. Check:
   - Front fork operation
     Push down hard on the handlebar several times and check if the front fork rebounds smoothly.
     Rough movement → Repair.
     Refer to “FRONT FORK” on page 4-60.

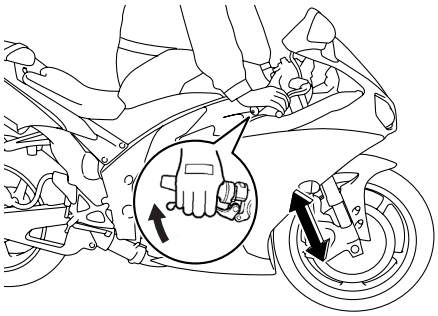

EAS21580
ADJUSTING THE FRONT FORK LEGS
The following procedure applies to both of the front fork legs.

EWA14B1029
WARNING

Securely support the motorcycle so that there is no danger of it falling over.

Spring preload
EWA14B1026
WARNING

Always adjust both front fork legs evenly. Uneven adjustment can result in poor handling and loss of stability.

ECA13570
NOTICE

- **Grooves are provided to indicate the adjustment position.**
- **Never go beyond the maximum or minimum adjustment positions.**

1. Adjust:
   - Spring preload

▼▼▼▼▼▼▼▼▼▼▼▼▼▼▼▼▼▼▼▼▼▼▼▼▼▼▼▼▼▼▼▼▼▼

a. Turn the adjusting bolt “1” in direction “a” or “b”.

Direction “a” **Spring preload is increased (suspension is harder).** **Direction “b”** **Spring preload is decreased (suspension is softer).**

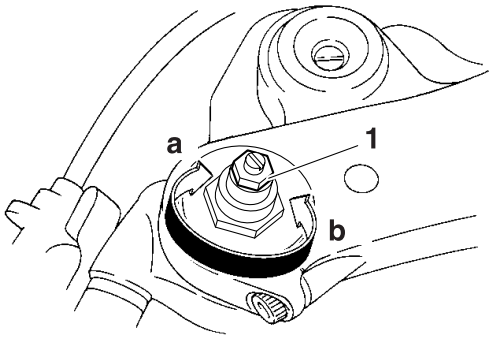

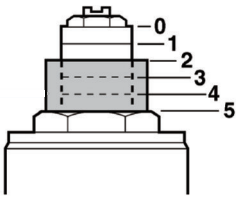

Spring preload adjusting positions
Minimum
0
Standard
2
Maximum
5

▲▲▲▲▲▲▲▲▲▲▲▲▲▲▲▲▲▲▲▲▲▲▲▲▲▲▲▲▲▲

Rebound damping

ECA13590

NOTICE

Never go beyond the maximum or minimum adjustment positions.

1. Adjust:
   - Rebound damping (right side)

▼▼▼▼▼▼▼▼▼▼▼▼▼▼▼▼▼▼▼▼▼▼▼▼▼▼▼▼▼▼

a. Turn the adjusting screw “1” in direction “a” or “b”.

Direction “a”
Rebound damping is increased (suspension is harder).
Direction “b”
Rebound damping is decreased (suspension is softer).

Rebound damping adjusting positions
Minimum
25 click(s) out*
Standard
12 click(s) out*
Maximum
1 click(s) out*

*** With the adjusting screw fully turned in**

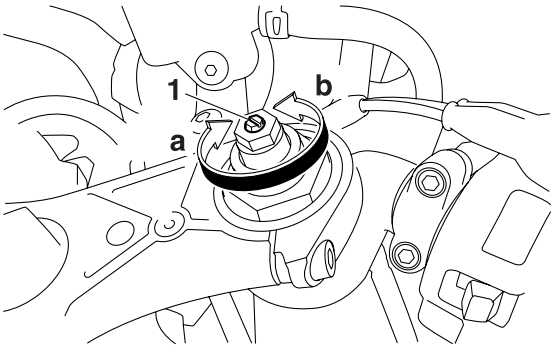

▲▲▲▲▲▲▲▲▲▲▲▲▲▲▲▲▲▲▲▲▲▲▲▲▲▲▲▲▲▲

Compression damping

ECA13590

NOTICE

Never go beyond the maximum or minimum adjustment positions.

1. Adjust:
   - Compression damping (left side)

▼▼▼▼▼▼▼▼▼▼▼▼▼▼▼▼▼▼▼▼▼▼▼▼▼▼▼▼▼▼

a. Turn the adjusting screw “1” in direction “a” or “b”.

Direction “a”
Compression damping is increased (suspension is harder).
Direction “b”
Compression damping is decreased (suspension is softer).

Compression damping adjusting positions
Minimum
25 click(s) out*
Standard
20 click(s) out*
Maximum
1 click(s) out*

*** With the adjusting screw fully turned in**

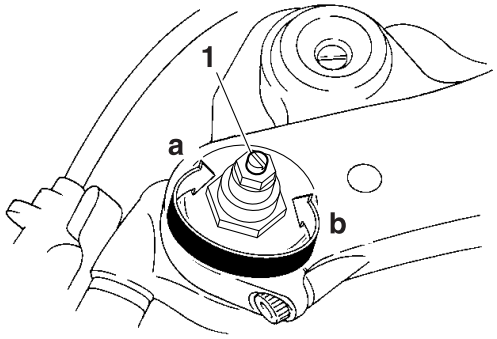

▲▲▲▲▲▲▲▲▲▲▲▲▲▲▲▲▲▲▲▲▲▲▲▲▲▲▲▲▲▲

EAS14B1096

CHECKING THE REAR SHOCK ABSORBER ASSEMBLY

Refer to “CHECKING THE REAR SHOCK ABSORBER ASSEMBLY” on page 4-76.

EAS21610

ADJUSTING THE REAR SHOCK ABSORBER ASSEMBLY

EWA13120

WARNING

Securely support the vehicle so that there is no danger of it falling over.

Spring preload

ECA13590

NOTICE

Never go beyond the maximum or minimum adjustment positions.

1. Adjust:
   - Spring preload

▼▼▼▼▼▼▼▼▼▼▼▼▼▼▼▼▼▼▼▼▼▼▼▼▼▼▼▼▼▼▼▼

a. Adjust the spring preload with a spring preload adjusting bolt.
b. Turn the spring preload adjusting bolt “1” in direction “a” or “b”.
c. Align the desired position on the “△” mark “2” with the match mark “3”.

Direction “a”
Spring preload is increased (suspension is harder).
Direction “b”
Spring preload is decreased (suspension is softer).

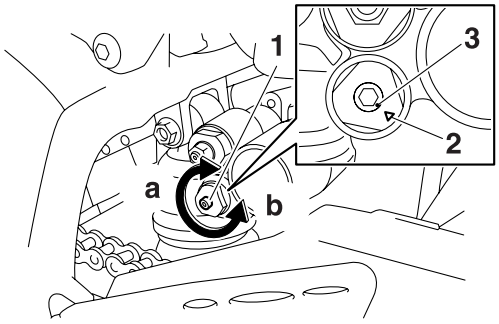

Spring preload adjusting positions
Minimum
16 turn(s) out*
Standard
8 turn(s) out*
Maximum
0 turn(s) out*

*** With the adjusting screw fully turned in**

▲▲▲▲▲▲▲▲▲▲▲▲▲▲▲▲▲▲▲▲▲▲▲▲▲▲▲▲▲▲▲▲

Rebound damping

ECA13590

NOTICE

Never go beyond the maximum or minimum adjustment positions.

1. Adjust:
   - Rebound damping

▼▼▼▼▼▼▼▼▼▼▼▼▼▼▼▼▼▼▼▼▼▼▼▼▼▼▼▼▼▼▼▼

a. Turn the adjusting screw “1” in direction “a” or “b”.

Direction “a”
Rebound damping is increased (suspension is harder).
Direction “b”
Rebound damping is decreased (suspension is softer).

Rebound damping adjusting positions
Minimum
20 click(s) out*
Standard
15 click(s) out*
Maximum
3 click(s) out*

*** With the adjusting screw fully turned in**

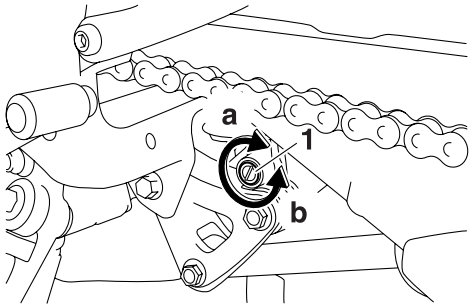

▲▲▲▲▲▲▲▲▲▲▲▲▲▲▲▲▲▲▲▲▲▲▲▲▲▲▲▲▲▲▲▲

Compression damping (for fast compression damping)

ECA13590

NOTICE

Never go beyond the maximum or minimum adjustment positions.

1. Adjust:
   - Compression damping (for fast compression damping)

▼▼▼▼▼▼▼▼▼▼▼▼▼▼▼▼▼▼▼▼▼▼▼▼▼▼▼▼▼▼▼▼

a. Turn the adjusting bolt “1” in direction “a” or “b”.

Direction “a”
Compression damping is increased (suspension is harder).
Direction “b”
Compression damping is decreased (suspension is softer).

Minimum
4 turn(s) out*
Standard
3 turn(s) out*
Maximum
0 turn(s) out*

*** With the adjusting screw fully turned in**

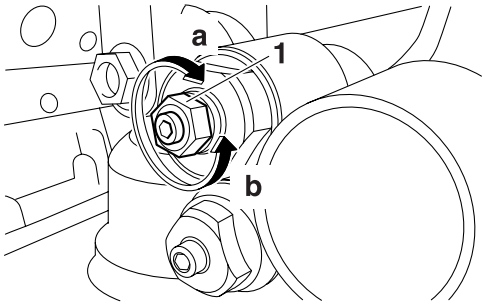

▲▲▲▲▲▲▲▲▲▲▲▲▲▲▲▲▲▲▲▲▲▲▲▲▲▲▲▲▲▲

Compression damping (for slow compression damping)

ECA13590

NOTICE

Never go beyond the maximum or minimum adjustment positions.

1. Adjust:
   - Compression damping (for slow compression damping)

▼▼▼▼▼▼▼▼▼▼▼▼▼▼▼▼▼▼▼▼▼▼▼▼▼▼▼▼▼▼

a. Turn the adjusting bolt “1” in direction “a” or “b”.

Direction “a”
Compression damping is increased (suspension is harder).
Direction “b”
Compression damping is decreased (suspension is softer).

Minimum
20 click(s) out*
Standard
9 click(s) out*
Maximum
1 click(s) out*

*** With the adjusting screw fully turned in**

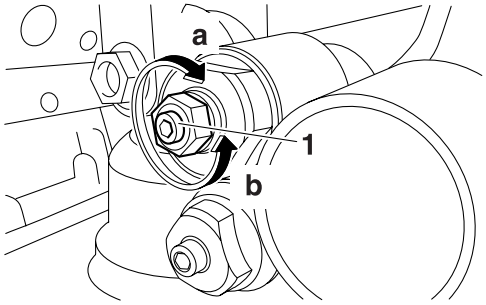

▲▲▲▲▲▲▲▲▲▲▲▲▲▲▲▲▲▲▲▲▲▲▲▲▲▲▲▲▲▲

EAS14B1097

CHECKING THE CONNECTING ARM AND RELAY ARM

Refer to “CHECKING THE CONNECTING ARM AND RELAY ARM” on page 4-77.

EAS20730

CHECKING THE ENGINE OIL LEVEL

1. Stand the vehicle on a level surface.

TIP
- Place the vehicle on a suitable stand.
- Make sure the vehicle is upright.

2. Start the engine, warm it up for several minutes, and then turn it off.
3. Check:
   - Engine oil level
     The engine oil level should be between the minimum level mark “a” and maximum level mark “b”.
     Below the minimum level mark → Add the recommended engine oil to the proper level.

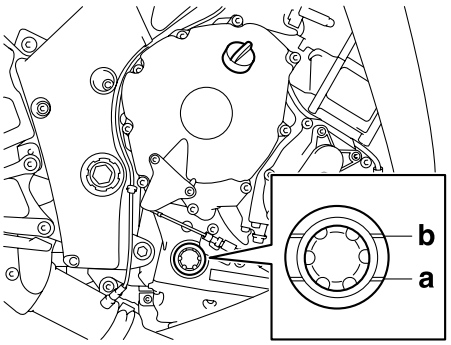

Type
YAMALUBE 4 10W-40 or YAMALUBE 4 20W-50, SAE 10W-40 or SAE 20W-50
Recommended engine oil grade
API service SG type or higher, JASO standard MA

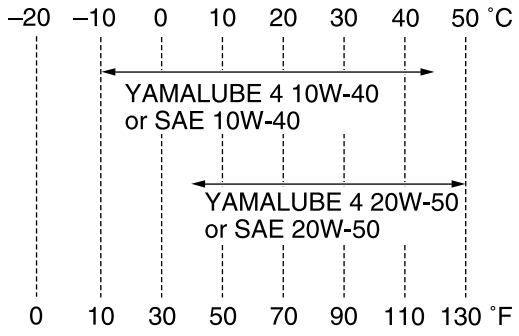

ECA13360

NOTICE

- **Engine oil also lubricates the clutch and the wrong oil types or additives could cause clutch slippage. Therefore, do not add any chemical additives or use engine oils with a grade of CD "a" or higher and do not use oils labeled "ENERGY CONSERVING II" "b".**
- **Do not allow foreign materials to enter the crankcase.**

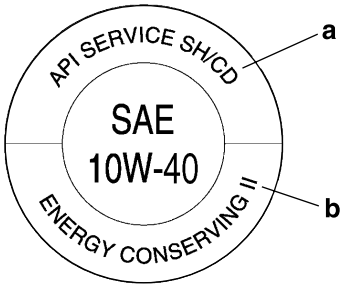

4. Start the engine, warm it up for several minutes, and then turn it off.
5. Check the engine oil level again.

TIP

Before checking the engine oil level, wait a few minutes until the oil has settled.

EAS20790

CHANGING THE ENGINE OIL

1. Start the engine, warm it up for several minutes, and then turn it off.
2. Place a container under the engine oil drain bolt.
3. Remove:
   - Lower cowlings
     Refer to "GENERAL CHASSIS" on page 4-1.
4. Remove:
   - Engine oil filler cap "1"
   - Engine oil drain bolt "2"
     (along with the gasket)

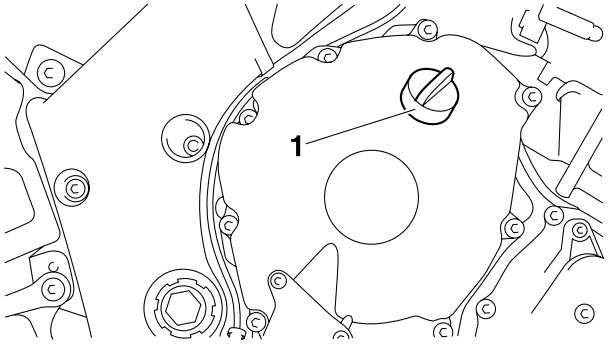

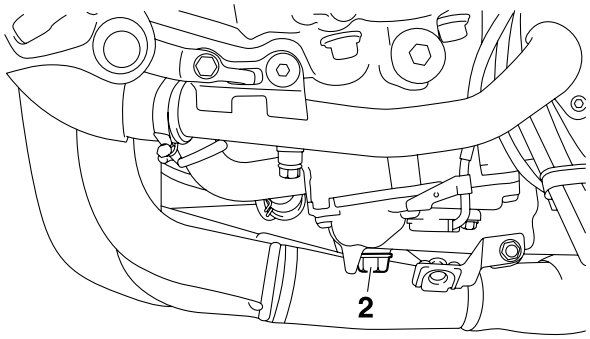

5. Drain:
   - Engine oil
     (completely from the crankcase)
6. If the oil filter cartridge is also to be replaced, perform the following procedure.

▼▼▼▼▼▼▼▼▼▼▼▼▼▼▼▼▼▼▼▼▼▼▼▼▼▼▼▼▼▼▼▼▼▼

a. Remove the oil filter cartridge "1" with an oil filter wrench "2".

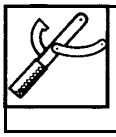

Oil filter wrench
90890-01426
YU-38411

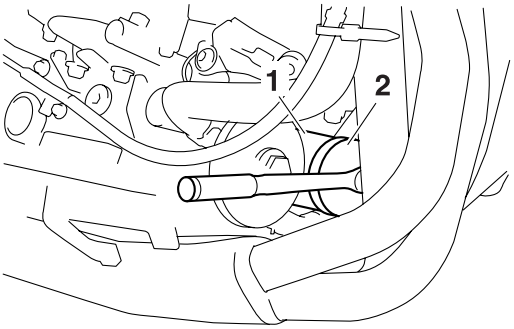

b. Lubricate the O-ring "3" of the new oil filter cartridge with a thin coat of lithium-soap-based grease.

ECA13390

NOTICE

Make sure the O-ring "3" is positioned correctly in the groove of the oil filter cartridge.

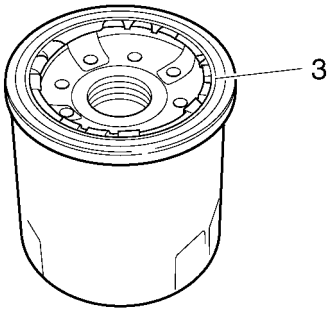

c. Tighten the new oil filter cartridge to specification with an oil filter wrench.

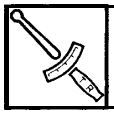	**Oil filter cartridge** **17 Nm (1.7 m·kgf, 12 ft·lbf)**

▲▲▲▲▲▲▲▲▲▲▲▲▲▲▲▲▲▲▲▲▲▲▲▲▲▲▲▲▲▲▲▲

7. Install:
   - Engine oil drain bolt
     (along with the gasket New)

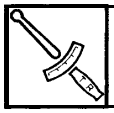	**Engine oil drain bolt** **43 Nm (4.3 m·kgf, 31 ft·lbf)**

8. Fill:
   - Crankcase
     (with the specified amount of the recommended engine oil)

	**Engine oil quantity** **Total amount** **4.58 L (4.84 US qt, 4.03 Imp.qt)** **Without oil filter cartridge replacement** **3.73 L (3.94 US qt, 3.28 Imp.qt)** **With oil filter cartridge replacement** **3.93 L (4.15 US qt, 3.46 Imp.qt)**

9. Install:
   - Engine oil filler cap
   - Lower cowlings
     Refer to "GENERAL CHASSIS" on page 4-1.
10. Start the engine, warm it up for several minutes, and then turn it off.
11. Check:
    - Engine
      (for engine oil leaks)
12. Check:
    - Engine oil level
      Refer to "CHECKING THE ENGINE OIL LEVEL" on page 3-26.

EAS20820

MEASURING THE ENGINE OIL PRESSURE

1. Check:
   - Engine oil level
     Below the minimum level mark "a" → Add the recommended engine oil to the proper level.

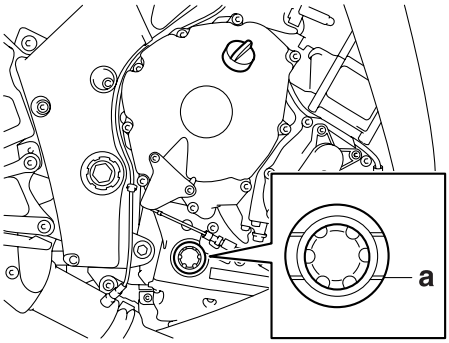

2. Start the engine, warm it up for several minutes, and then turn it off.

ECA13410

NOTICE

When the engine is cold, the engine oil will have a higher viscosity, causing the engine oil pressure to increase. Therefore, be sure to measure the engine oil pressure after warming up the engine.

3. Remove:
   - Main gallery bolt "1"

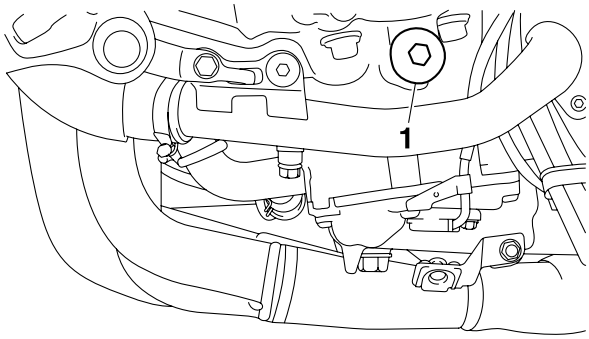

EWA12980

⚠ WARNING

The engine, muffler and engine oil are extremely hot.

4. Install:
   - Oil pressure gauge "1"
   - Adapter "2"

Pressure gauge
90890-03153
YU-03153
Oil pressure adapter H
90890-03139

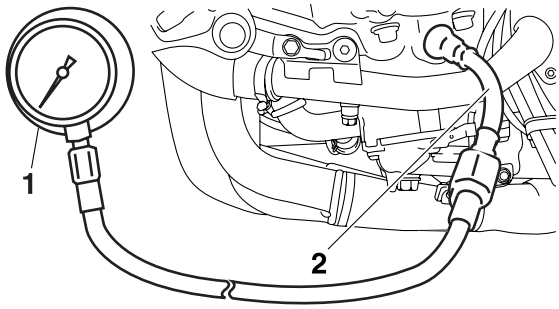

5. Measure:
   - Engine oil pressure
     (at the following conditions)

Oil pressure
240.0 kPa/5000 r/min (2.40 kgf/cm²/5000 r/min, 34.8 psi/5000 r/min)
Oil temperature
75.0–85.0 °C (167.0–185.0 °F)

Out of specification → Adjust.

Engine oil pressure	Possible causes
Below specification	• Faulty oil pump • Clogged oil filter • Leaking oil passage • Broken or damaged oil seal
Above specification	• Leaking oil passage • Faulty oil filter • Oil viscosity too high

6. Install:
   - Main gallery bolt

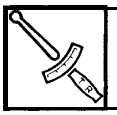

Main gallery bolt
8 Nm (0.8 m·kgf, 5.8 ft·lbf)

EAS21110
CHECKING THE COOLANT LEVEL

1. Stand the vehicle on a level surface.

TIP
- Place the vehicle on a suitable stand.
- Make sure the vehicle is upright.

2. Check:
   - Coolant level
     The coolant level should be between the maximum level mark “a” and minimum level mark “b”.
     Below the minimum level mark → Add the recommended coolant to the proper level.

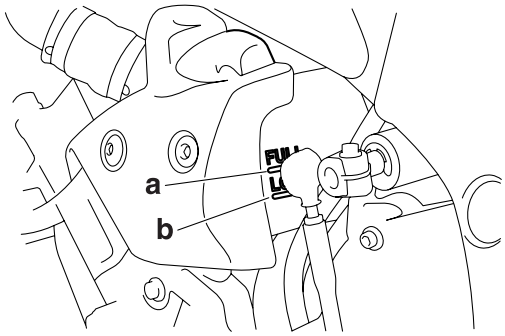

ECA13470
NOTICE
- **Adding water instead of coolant lowers the antifreeze content of the coolant. If water is used instead of coolant check, and if necessary, correct the antifreeze concentration of the coolant.**
- **Use only distilled water. However, if distilled water is not available, soft water may be used.**

3. Start the engine, warm it up for several minutes, and then turn it off.
4. Check:
   - Coolant level

TIP
Before checking the coolant level, wait a few minutes until it settles.

EAS21120
CHECKING THE COOLING SYSTEM

1. Remove:
   - Side cowlings
   - Lower cowlings
     Refer to “GENERAL CHASSIS” on page 4-1.
2. Check:
   - Radiator “1”
   - Radiator inlet hose “2”
   - Radiator outlet hose “3”
   - Oil cooler inlet hose “4”
   - Oil cooler outlet hose “5”
   - Oil cooler “6”
   - Water jacket joint “7”
   - Water jacket joint hose “8”

- Water pump inlet pipe “9”
- Water pump outlet pipe “10”
  Cracks/damage → Replace.
  Refer to “RADIATOR” on page 6-1 and “OIL COOLER” on page 6-5.

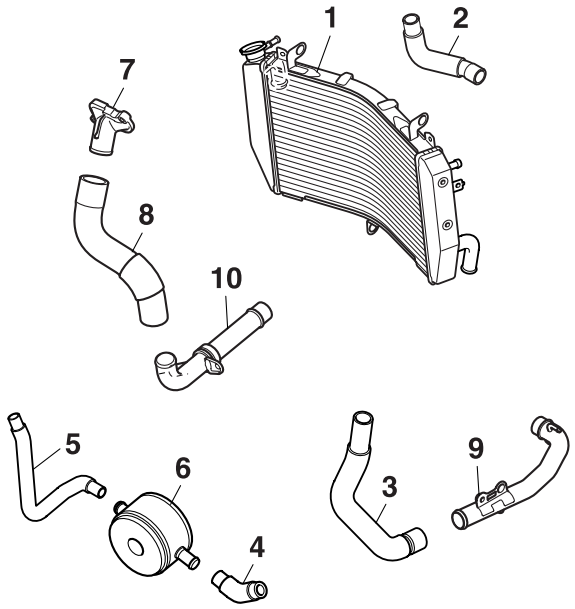

3. Install:
   - Lower cowlings
   - Side cowlings
     Refer to “GENERAL CHASSIS” on page 4-1.

EAS21130
CHANGING THE COOLANT

1. Remove:
   - Lower cowlings
   - Side cowlings
     Refer to “GENERAL CHASSIS” on page 4-1.
2. Remove:
   - Coolant reservoir
   - Coolant reservoir hose
3. Disconnect:
   - Coolant reservoir cap “1”
4. Drain:
   - Coolant
     (from the coolant reservoir)
5. Remove:
   - Radiator cap “2”

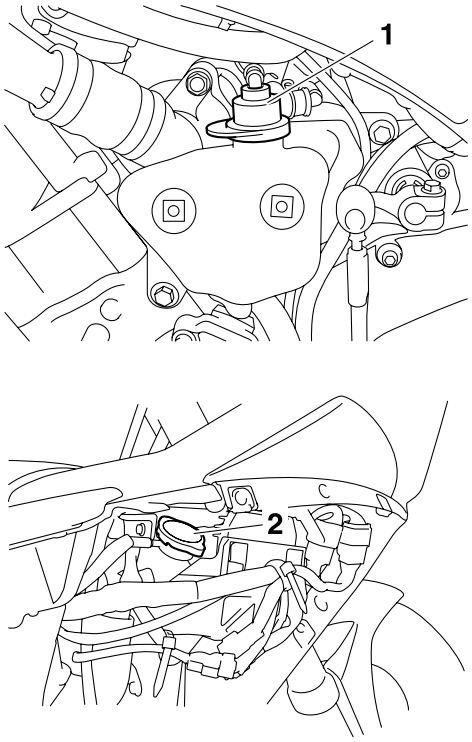

EWA13030
WARNING

A hot radiator is under pressure. Therefore, do not remove the radiator cap when the engine is hot. Scalding hot fluid and steam may be blown out, which could cause serious injury. When the engine has cooled, open the radiator cap as follows:
Place a thick rag or a towel over the radiator cap and slowly turn the radiator cap counterclockwise toward the detent to allow any residual pressure to escape. When the hissing sound has stopped, press down on the radiator cap and turn it counterclockwise to remove.

The following procedure applies to all of the coolant drain bolts and copper washers.

6. Remove:
   - Coolant drain bolt (engine) “1”
     (along with the copper washer)

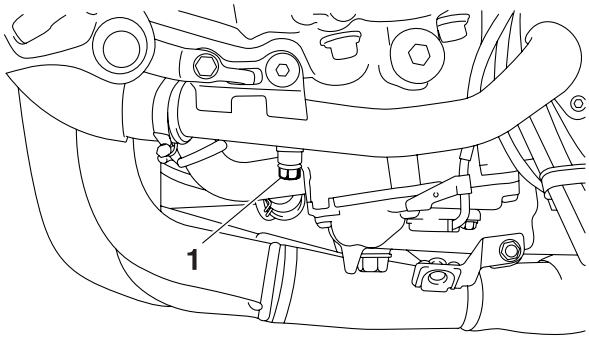

7. Drain:
   - Coolant
     (from the engine and radiator)
8. Install:
   - Coolant drain bolt (with the copper washer New)

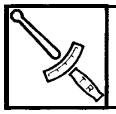	**Coolant drain bolt** **7 Nm (0.7 m·kgf, 5.1 ft·lbf)**

9. Connect:
   - Coolant reservoir hose
10. Install:
    - Coolant reservoir
11. Fill:
    - Cooling system
      (with the specified amount of the recommended coolant)

	**Recommended antifreeze** **High-quality ethylene glycol antifreeze containing corrosion inhibitors for aluminum engines** **Mixing ratio** **1:1 (antifreeze:water)** **Radiator capacity (including all routes)** **2.73 L (2.89 US qt, 2.40 Imp.qt)** **Coolant reservoir capacity (up to the maximum level mark)** **0.25 L (0.26 US qt, 0.22 Imp.qt)**

Handling notes for coolant
Coolant is potentially harmful and should be handled with special care.

EWA13040

WARNING

- **If coolant splashes in your eyes, thoroughly wash them with water and consult a doctor.**
- **If coolant splashes on your clothes, quickly wash it away with water and then with soap and water.**
- **If coolant is swallowed, induce vomiting and get immediate medical attention.**

ECA13480

NOTICE

- **Adding water instead of coolant lowers the antifreeze content of the coolant. If water is used instead of coolant check, and if necessary, correct the antifreeze concentration of the coolant.**
- **Use only distilled water. However, if distilled water is not available, soft water may be used.**
- **If coolant comes into contact with painted surfaces, immediately wash them with water.**
- **Do not mix different types of antifreeze.**

12. Install:
    - Radiator cap
13. Fill:
    - Coolant reservoir
      (with the recommended coolant to the maximum level mark “a”)

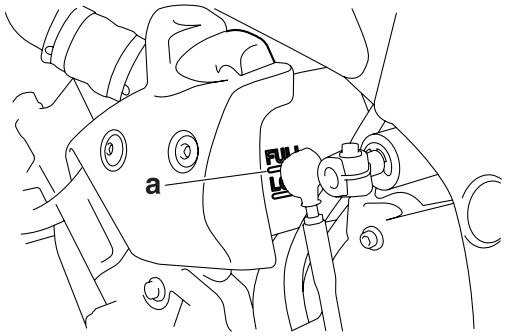

14. Install:
    - Coolant reservoir cap
15. Start the engine, warm it up for several minutes, and then stop it.
16. Check:
    - Coolant level
      Refer to “CHECKING THE COOLANT LEVEL” on page 3-29.

TIP

Before checking the coolant level, wait a few minutes until the coolant has settled.

17. Install:
    - Side cowlings
    - Lower cowlings
      Refer to “GENERAL CHASSIS” on page 4-1.

EAS14B1098
CHECKING THE FRONT BRAKE LIGHT SWITCH

Refer to “ELECTRICAL COMPONENTS” on page 8-101.

EAS21330
ADJUSTING THE REAR BRAKE LIGHT SWITCH

TIP

The rear brake light switch is operated by movement of the brake pedal. The rear brake light switch is properly adjusted when the brake light comes on just before the braking effect starts.

1. Check:
   - Rear brake light operation timing
     Incorrect → Adjust.
2. Adjust:
   - Rear brake light operation timing

▼▼▼▼▼▼▼▼▼▼▼▼▼▼▼▼▼▼▼▼▼▼▼▼▼▼▼▼▼▼▼▼

a. Hold the main body “1” of the rear brake light switch so that it does not rotate and turn the adjusting nut “2” in direction “a” or “b” until the rear brake light comes on at the proper time.

Direction “a”
Brake light comes on sooner.
Direction “b”
Brake light comes on later.

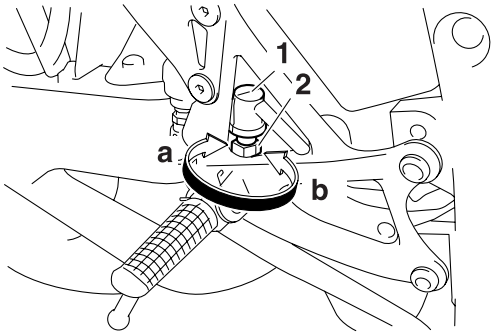

▲▲▲▲▲▲▲▲▲▲▲▲▲▲▲▲▲▲▲▲▲▲▲▲▲▲▲▲▲▲▲▲

EAS21690
CHECKING AND LUBRICATING THE CABLES

The following procedure applies to all of the inner and outer cables.

EWA13270

WARNING

Damaged outer cable may cause the cable to corrode and interfere with its movement. Replace damaged outer cable and inner cables as soon as possible.

1. Check:
   - Outer cable
     Damage → Replace.
2. Check:
   - Cable operation
     Rough movement → Lubricate.

Recommended lubricant
Engine oil or a suitable cable lubricant

TIP

Hold the cable end upright and pour a few drops of lubricant into the cable sheath or use a suitable lubricating device.

EAS20630
ADJUSTING THE THROTTLE CABLE FREE PLAY

TIP

Prior to adjusting the throttle cable free play, the engine idling speed and carburetor synchronization should be adjusted properly.

1. Check:
   - Throttle cable free play “a”
     Out of specification → Adjust.

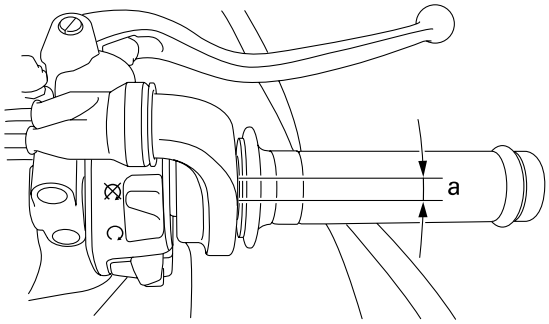

Throttle cable free play
3.0–5.0 mm (0.12–0.20 in)

2. Adjust:
   - Throttle cable free play

▼▼▼▼▼▼▼▼▼▼▼▼▼▼▼▼▼▼▼▼▼▼▼▼▼▼▼▼▼▼▼▼

a. Loosen the locknut “1”.
b. Turn the adjusting nut “2” in direction “a” or “b” until the specified throttle cable free play is obtained.

Direction "a"
Throttle cable free play is increased.
Direction "b"
Throttle cable free play is decreased.

c. Tighten the locknut "1".

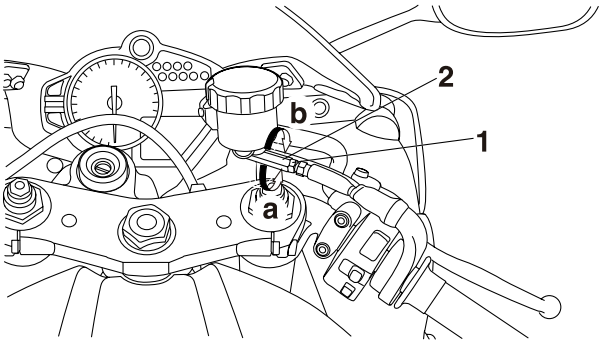

EWA14B1016

WARNING

After adjusting the throttle cable free play, start the engine and turn the handlebars to the right and to the left to ensure that this does not cause the engine idling speed to change.

▲▲▲▲▲▲▲▲▲▲▲▲▲▲▲▲▲▲▲▲▲▲▲▲▲▲▲▲▲▲

EAS21740

LUBRICATING THE REAR SUSPENSION

Lubricate the pivoting point and metal-to-metal moving parts of the rear suspension.

	Recommended lubricant **Lithium-soap-based grease**

EAS21760

CHECKING AND CHARGING THE BATTERY

Refer to "ELECTRICAL COMPONENTS" on page 8-101.

EAS21770

CHECKING THE FUSES

Refer to "ELECTRICAL COMPONENTS" on page 8-101.

EAS21790

REPLACING THE HEADLIGHT BULBS

The following procedure applies to both of the headlight bulbs.

1. Remove:
   - Headlight bulb cover "1"

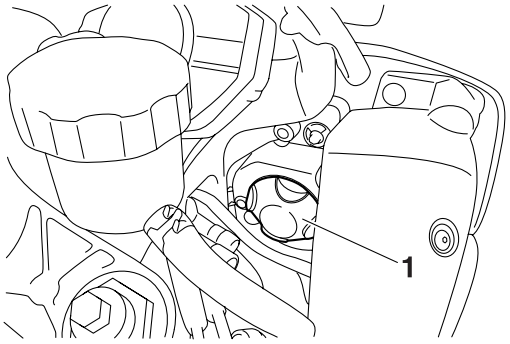

2. Disconnect:
   - Headlight coupler "1"

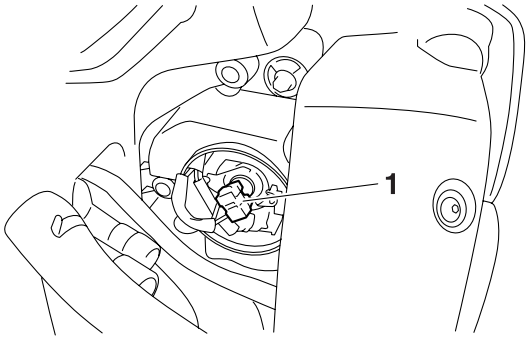

3. Remove:
   - Headlight bulb holder "1"
   - Headlight bulb "2"

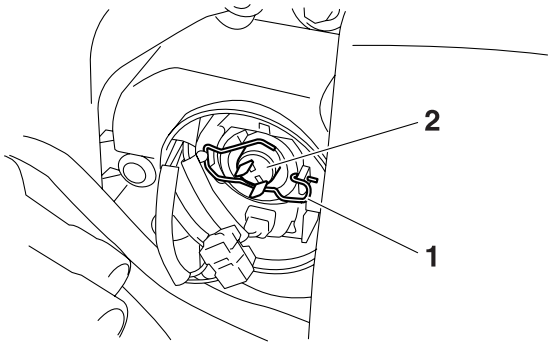

EWA13320

WARNING

Since the headlight bulb gets extremely hot, keep flammable products and your hands away from the bulb until it has cooled down.

4. Install:
   - Headlight bulb New
     Secure the new headlight bulb with the headlight bulb holder.

ECA13690

NOTICE

Avoid touching the glass part of the headlight bulb to keep it free from oil, otherwise

the transparency of the glass, the life of the bulb and the luminous flux will be adversely affected. If the headlight bulb gets soiled, thoroughly clean it with a cloth moistened with alcohol or lacquer thinner.

5. Install:
   - Headlight bulb
6. Install:
   - Headlight bulb holder
7. Connect:
   - Headlight coupler
8. Install:
   - Headlight bulb cover

EAS21810

ADJUSTING THE HEADLIGHT BEAMS

The following procedure applies to both of the headlights.

1. Adjust:
   - Headlight beam (vertically)

▼▼▼▼▼▼▼▼▼▼▼▼▼▼▼▼▼▼▼▼▼▼▼▼▼▼▼▼▼▼▼▼▼▼

a. Turn the adjusting screw “1” in direction “a” or “b”.

Direction “a”
Headlight beam is raised.
Direction “b”
Headlight beam is lowered.

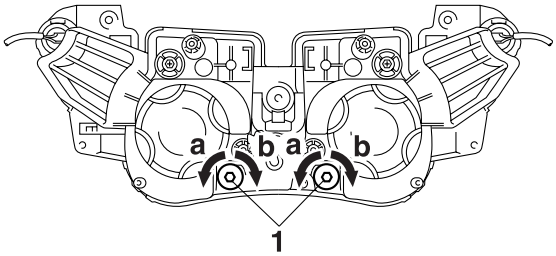

▲▲▲▲▲▲▲▲▲▲▲▲▲▲▲▲▲▲▲▲▲▲▲▲▲▲▲▲▲▲▲▲▲▲

2. Adjust:
   - Headlight beam (horizontally)

▼▼▼▼▼▼▼▼▼▼▼▼▼▼▼▼▼▼▼▼▼▼▼▼▼▼▼▼▼▼▼▼▼▼

a. Turn the adjusting knob “2” in direction “a” or “b”.
   Left headlight

Direction “a”
Headlight beam moves to the right.
Direction “b”
Headlight beam moves to the left.

Right headlight

Direction “a”
Headlight beam moves to the left.
Direction “b”
Headlight beam moves to the right.

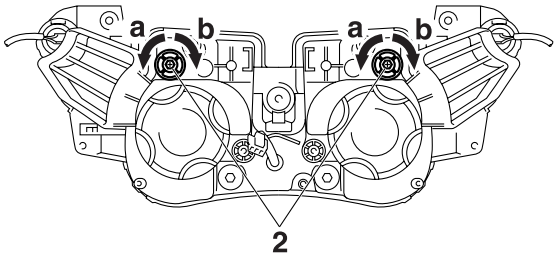

▲▲▲▲▲▲▲▲▲▲▲▲▲▲▲▲▲▲▲▲▲▲▲▲▲▲▲▲▲▲▲▲▲▲

CHASSIS

EAS21830
GENERAL CHASSIS

Removing the seats and battery

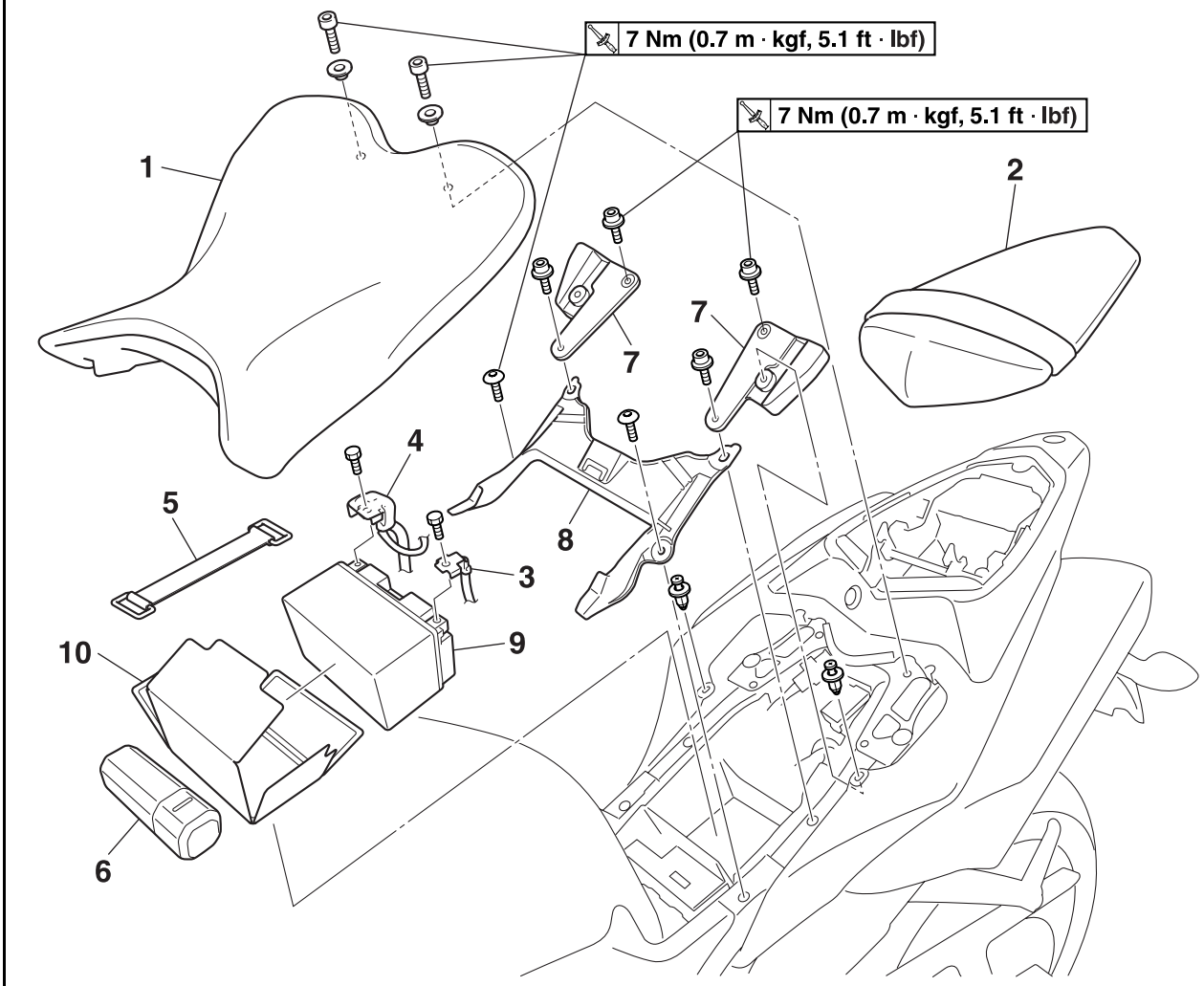

Order	Job/Parts to remove	Q'ty	Remarks
1	Rider seat	1	
2	Passenger seat	1	
3	Battery negative lead	1	Disconnect.
4	Battery positive lead	1	Disconnect.
5	Tool band	1	
6	Tool	1	
7	Upper tail cover bracket	2	
8	Battery cover	1	
9	Battery	1	
10	Battery seat	1	
			For installation, reverse the removal procedure.

Removing the side cowlings

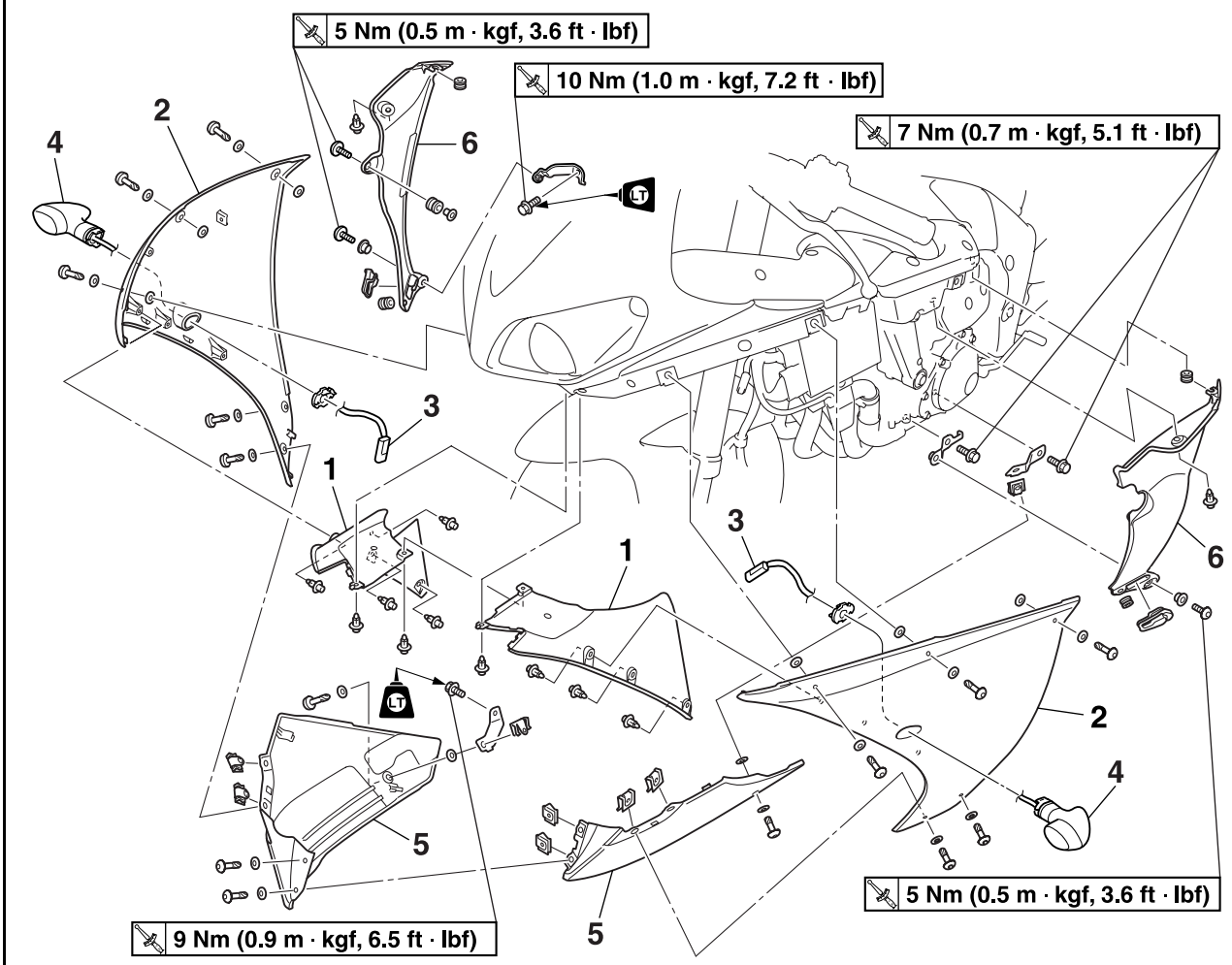

Order	Job/Parts to remove	Q'ty	Remarks
1	Front cowling inner panel	2	
2	Side cowling	2	
3	Front turn signal/position light coupler	2	Disconnect.
4	Front turn signal/position light	2	
5	Lower cowling	2	
6	Side cowling inner panel	2	
			For installation, reverse the removal procedure.

Removing the ECU and rectifier/regulator

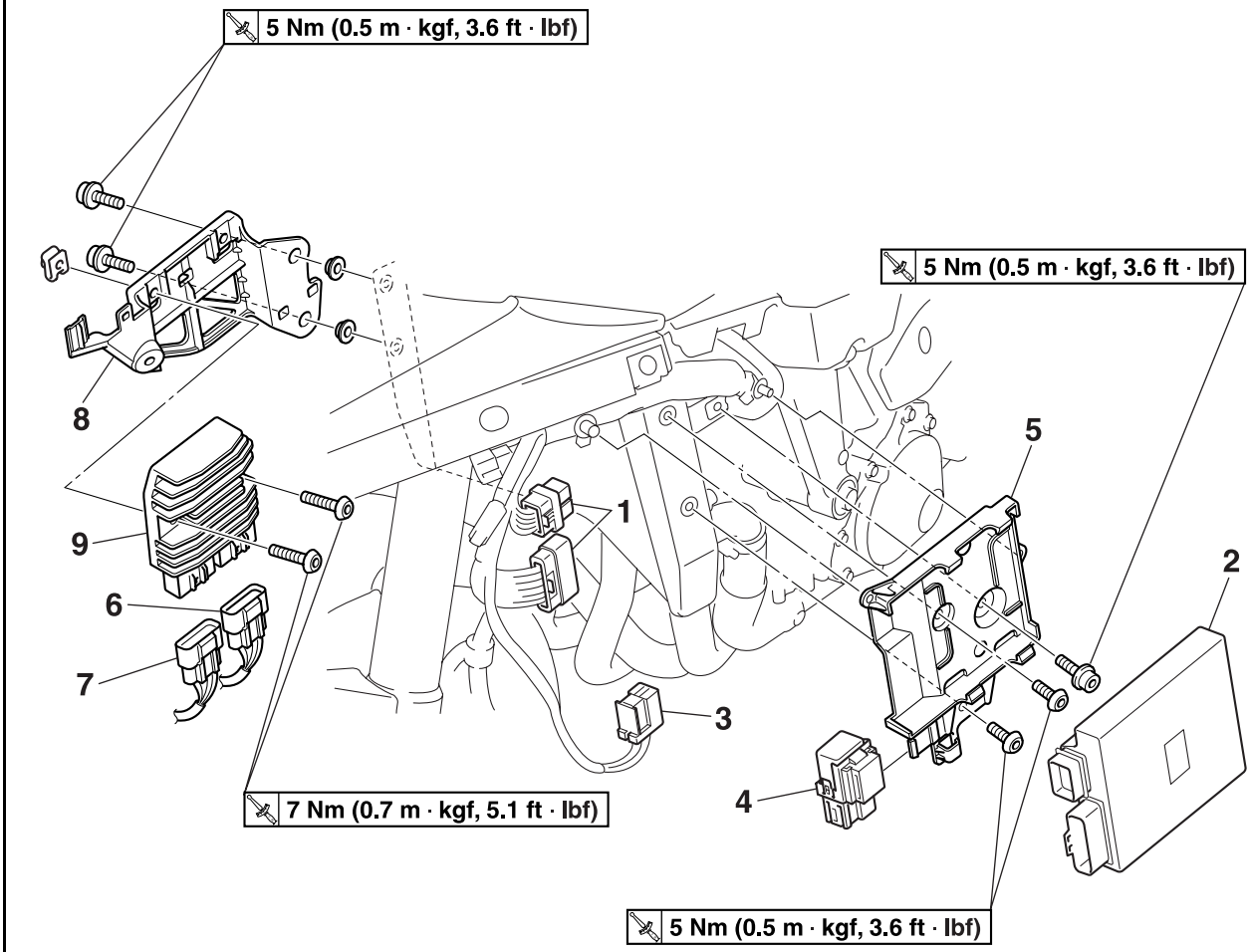

Order	Job/Parts to remove	Q'ty	Remarks
	Side cowling		Refer to "GENERAL CHASSIS" on page 4-1.
1	ECU coupler	2	Disconnect.
2	ECU	1	
3	Radiator fan motor relay coupler	1	Disconnect.
4	Radiator fan motor relay	1	
5	ECU bracket	1	
6	Rectifier/regulator coupler	1	Disconnect.
7	Stator coil lead coupler	1	Disconnect.
8	Rectifier/regulator bracket	1	
9	Rectifier/regulator	1	
			For installation, reverse the removal procedure.

Removing the Air ducts

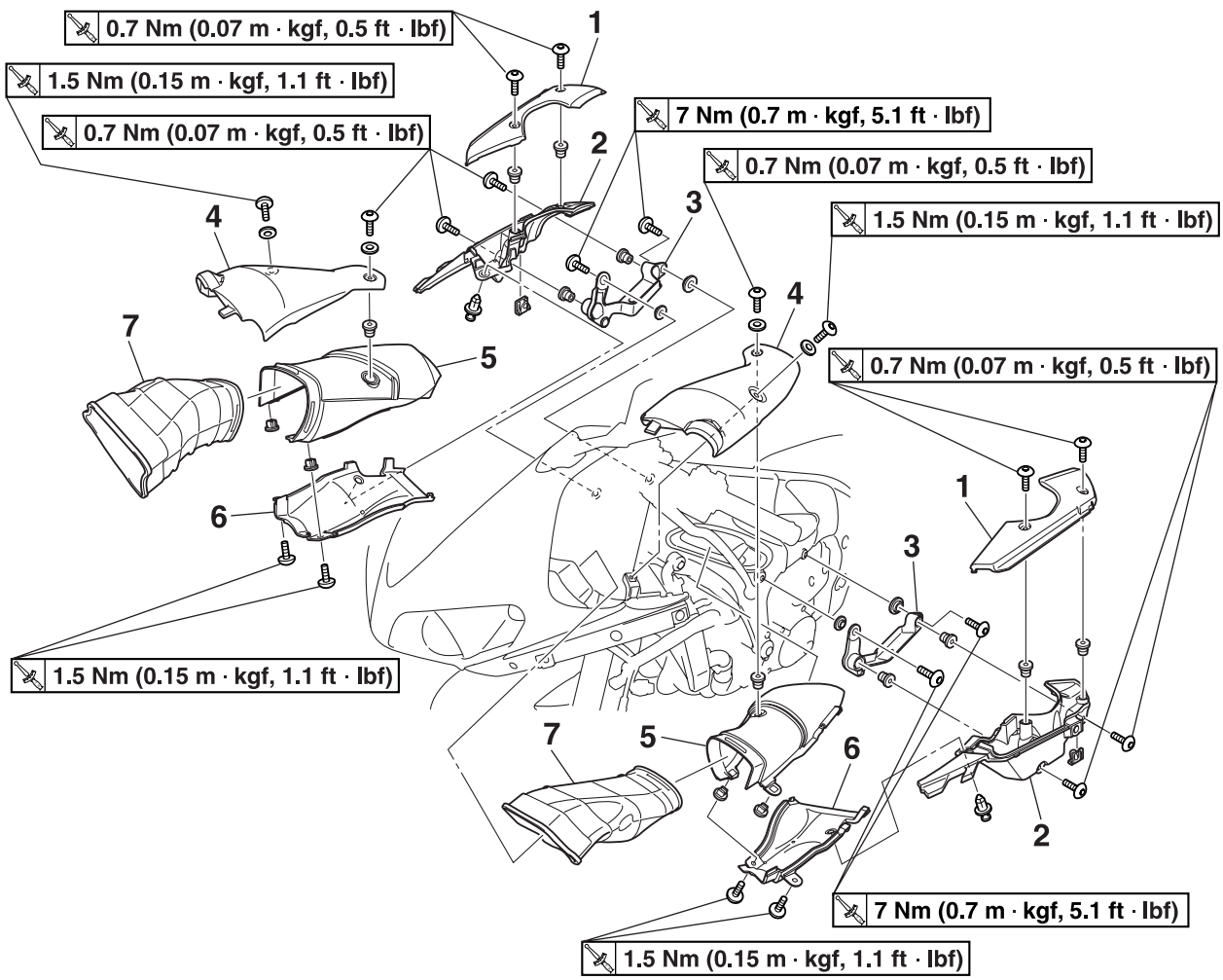

Order	Job/Parts to remove	Q'ty	Remarks
	Side cowling		Refer to "GENERAL CHASSIS" on page 4-1.
	ECU and rectifier/regulator		Refer to "GENERAL CHASSIS" on page 4-1.
1	Air chamber cover	2	
2	Air chamber	2	
3	Air chamber bracket	2	
4	Air intake air duct cover	2	
5	Rear intake air duct upper	2	
6	Rear intake air duct lower	2	
7	Front intake air duct	2	
			For installation, reverse the removal procedure.

Removing the front cowling assembly

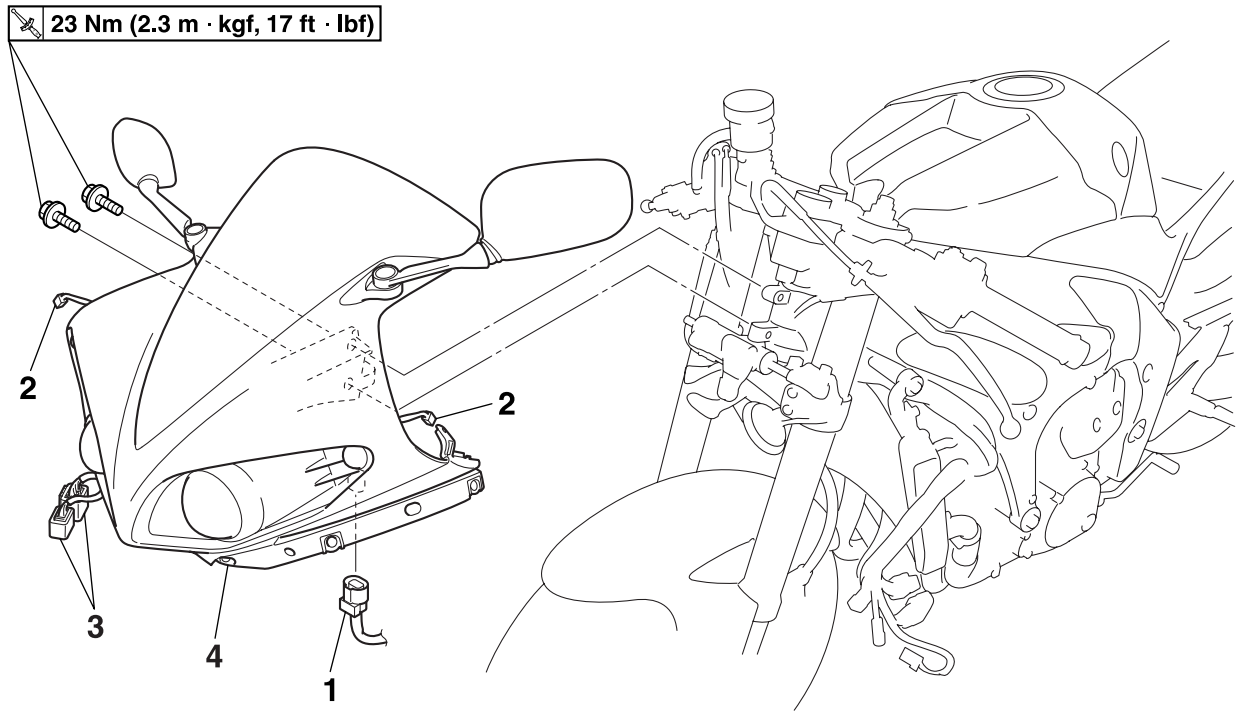

Order	Job/Parts to remove	Q'ty	Remarks
	Side cowling		Refer to "GENERAL CHASSIS" on page 4-1.
	ECU and Rectifier/regulator		Refer to "GENERAL CHASSIS" on page 4-1.
	Air duct		Refer to "GENERAL CHASSIS" on page 4-1.
1	Intake air temperature sensor coupler	1	Disconnect.
2	Auxiliary light coupler	2	Disconnect.
3	Headlight sub-wire harness coupler	2	Disconnect.
4	Front cowling assembly	1	
			For installation, reverse the removal procedure.

Removing the meter and headlight

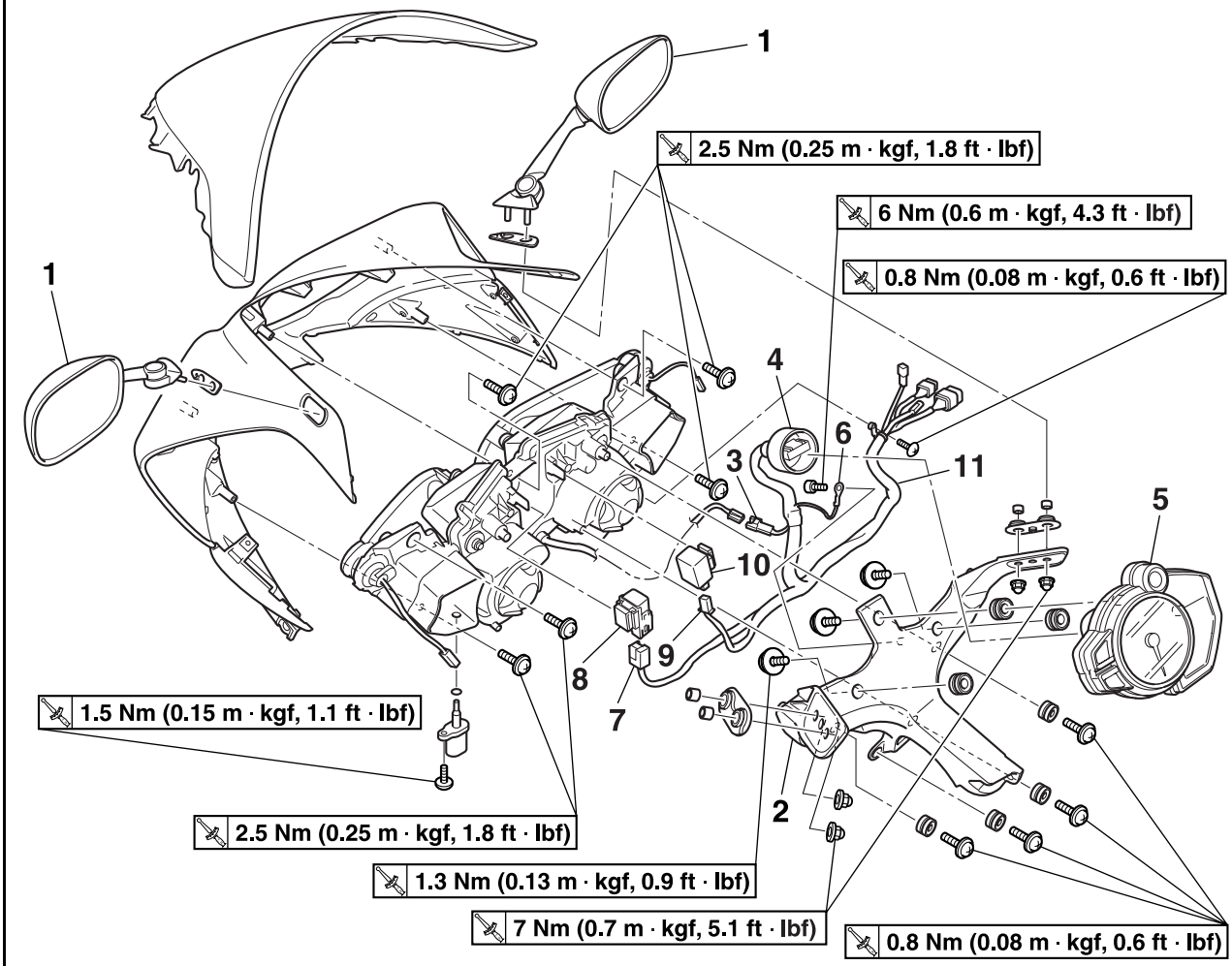

Order	Job/Parts to remove	Q'ty	Remarks
	Side cowling		Refer to "GENERAL CHASSIS" on page 4-1.
	ECU and Rectifier/regulator		Refer to "GENERAL CHASSIS" on page 4-1.
	Air duct		Refer to "GENERAL CHASSIS" on page 4-1.
	Front cowling assembly		Refer to "GENERAL CHASSIS" on page 4-1.
1	Rear view mirror	2	
2	Meter bracket	1	
3	Headlight coupler	1	Disconnect.
4	Meter coupler	1	Disconnect.
5	Meter assembly	1	
6	Ground lead	1	Disconnect.
7	Headlight relay coupler	1	Disconnect.
8	Headlight relay	1	
9	Turn signal relay coupler	1	Disconnect.
10	Turn signal relay	1	
11	Headlight sub-wire harness	1	

Removing the meter and headlight

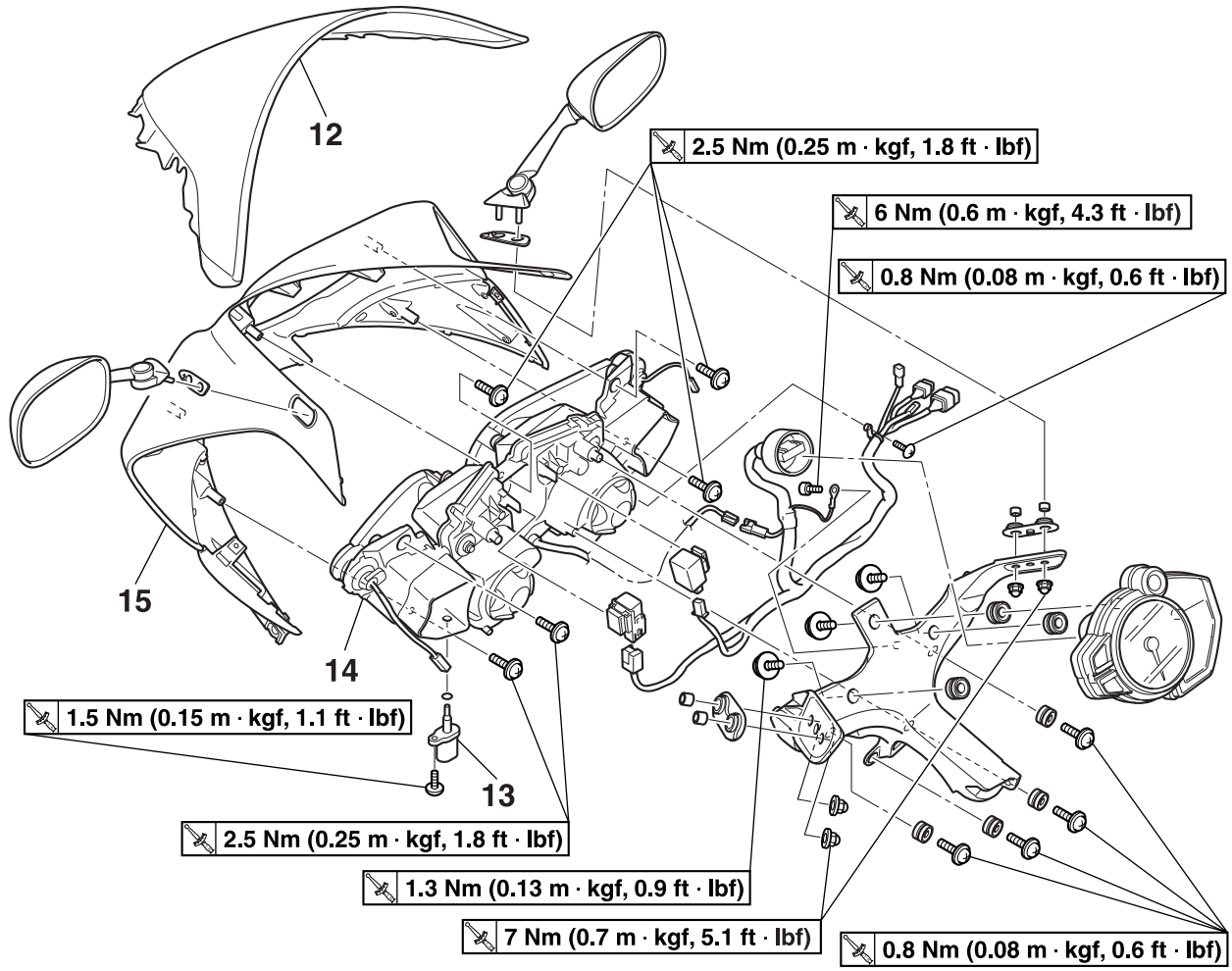

Order	Job/Parts to remove	Q'ty	Remarks
12	Windshield	1	
13	Intake air temperature sensor	1	
14	Headlight assembly	1	
15	Front cowling	1	
			For installation, reverse the removal procedure.

Disassembling the headlight assembly

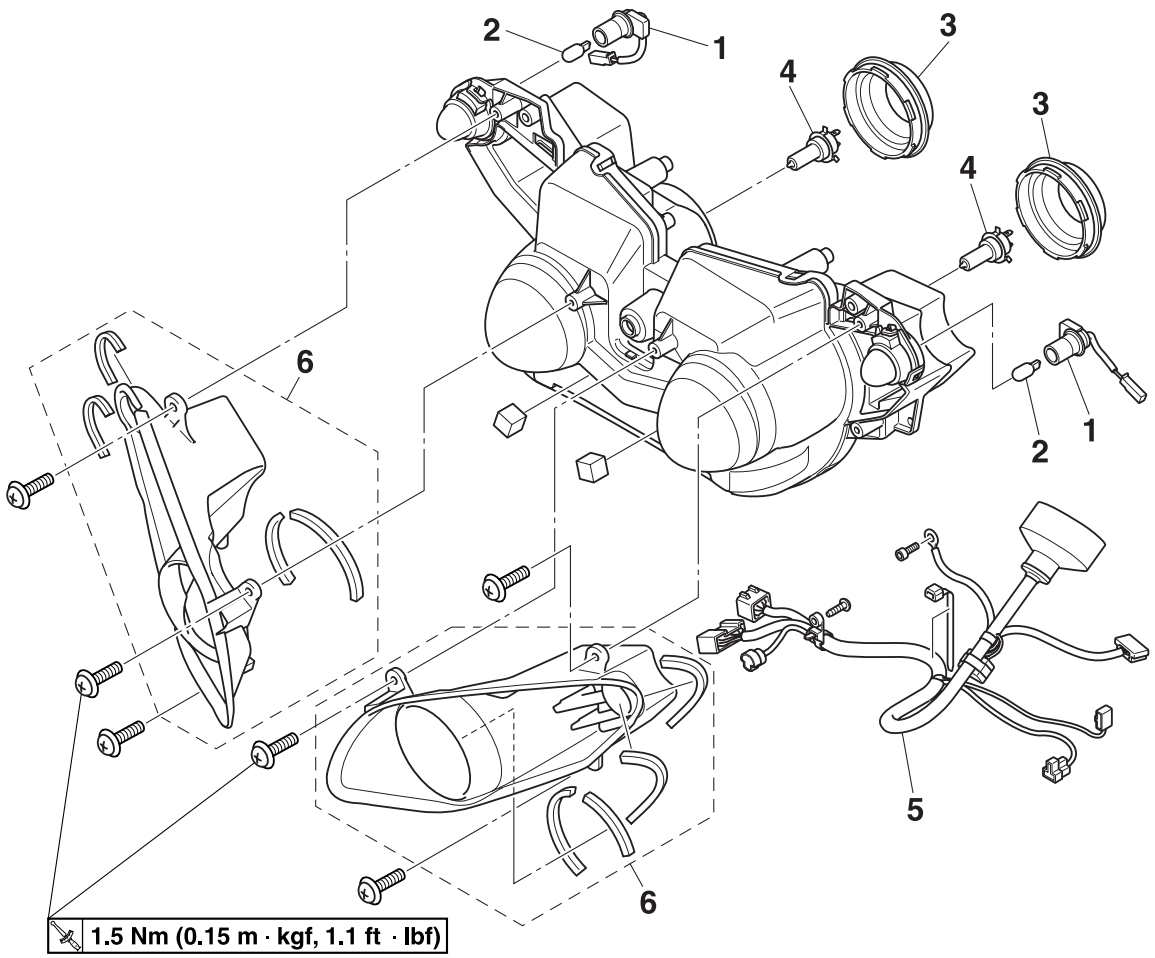

Order	Job/Parts to remove	Q'ty	Remarks
1	Auxiliary light socket	2	
2	Auxiliary light bulb	2	
3	Headlight bulb cover	2	
4	Headlight bulb	2	
5	Headlight harness	1	
6	Headlight grille	2	
			For installation, reverse the removal procedure.

Removing the rear fender

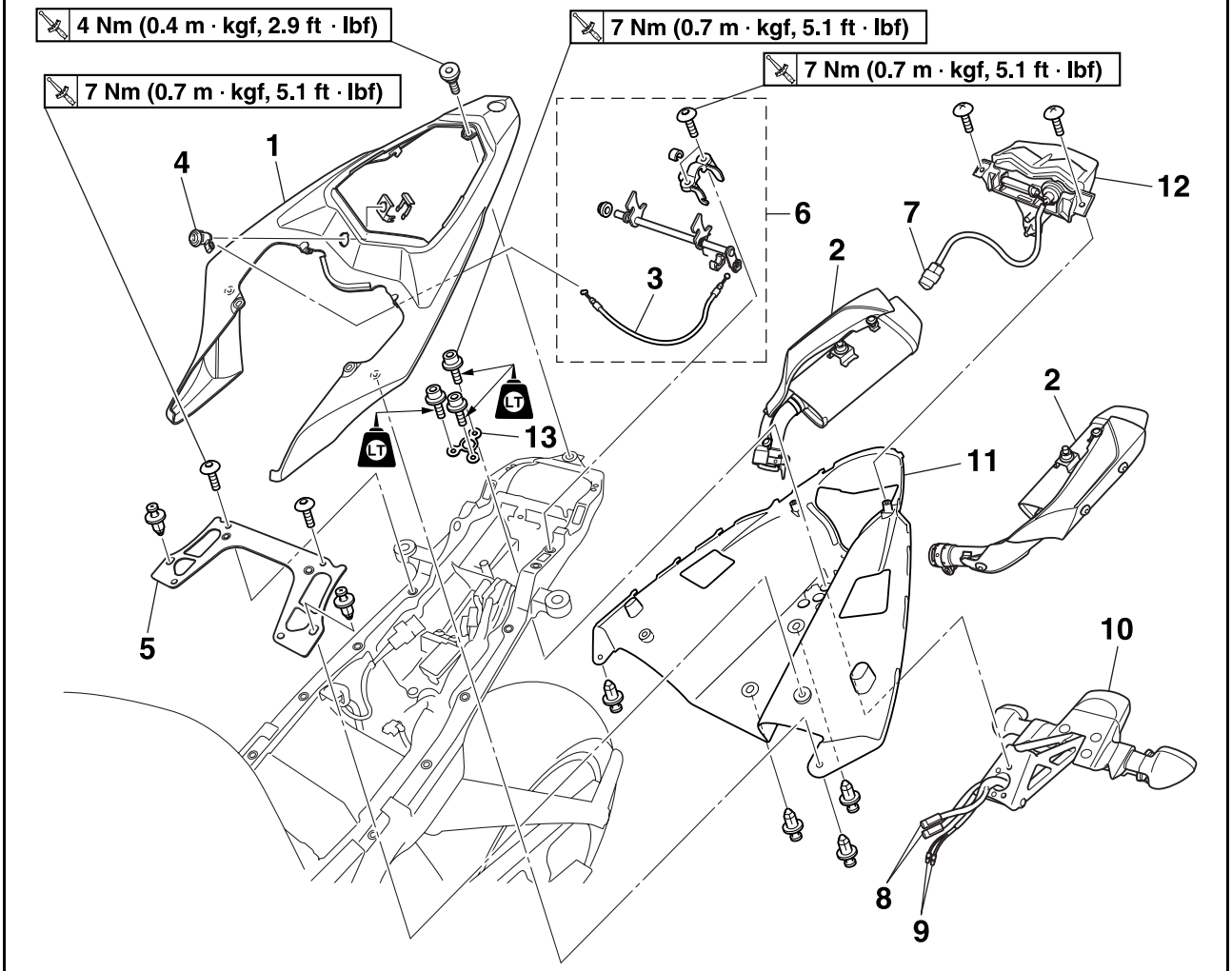

Order	Job/Parts to remove	Q'ty	Remarks
	Rider seat		Refer to "GENERAL CHASSIS" on page 4-1.
	Passenger seat		Refer to "GENERAL CHASSIS" on page 4-1.
	Upper tail cover bracket		Refer to "GENERAL CHASSIS" on page 4-1.
1	Upper tail cover	1	
2	Muffler	2	Refer to "ENGINE REMOVAL" on page 5-3.
3	Passenger seat lock cable	1	
4	Passenger seat lock key cylinder	1	
5	Lower tail cover bracket	1	
6	Passenger seat lock assembly	1	
7	Tail/brake light lead coupler	1	Disconnect.
8	Rear turn signal light lead coupler	2	Disconnect.
9	License plate light lead connector	2	Disconnect.
10	License plate/turn signal light assembly	1	
11	Lower tail cover	1	
12	Tail/brake light	1	
13	Tail/brake light plate	1	
			For installation, reverse the removal procedure.

Disassembling the license plate/turn signal light assembly

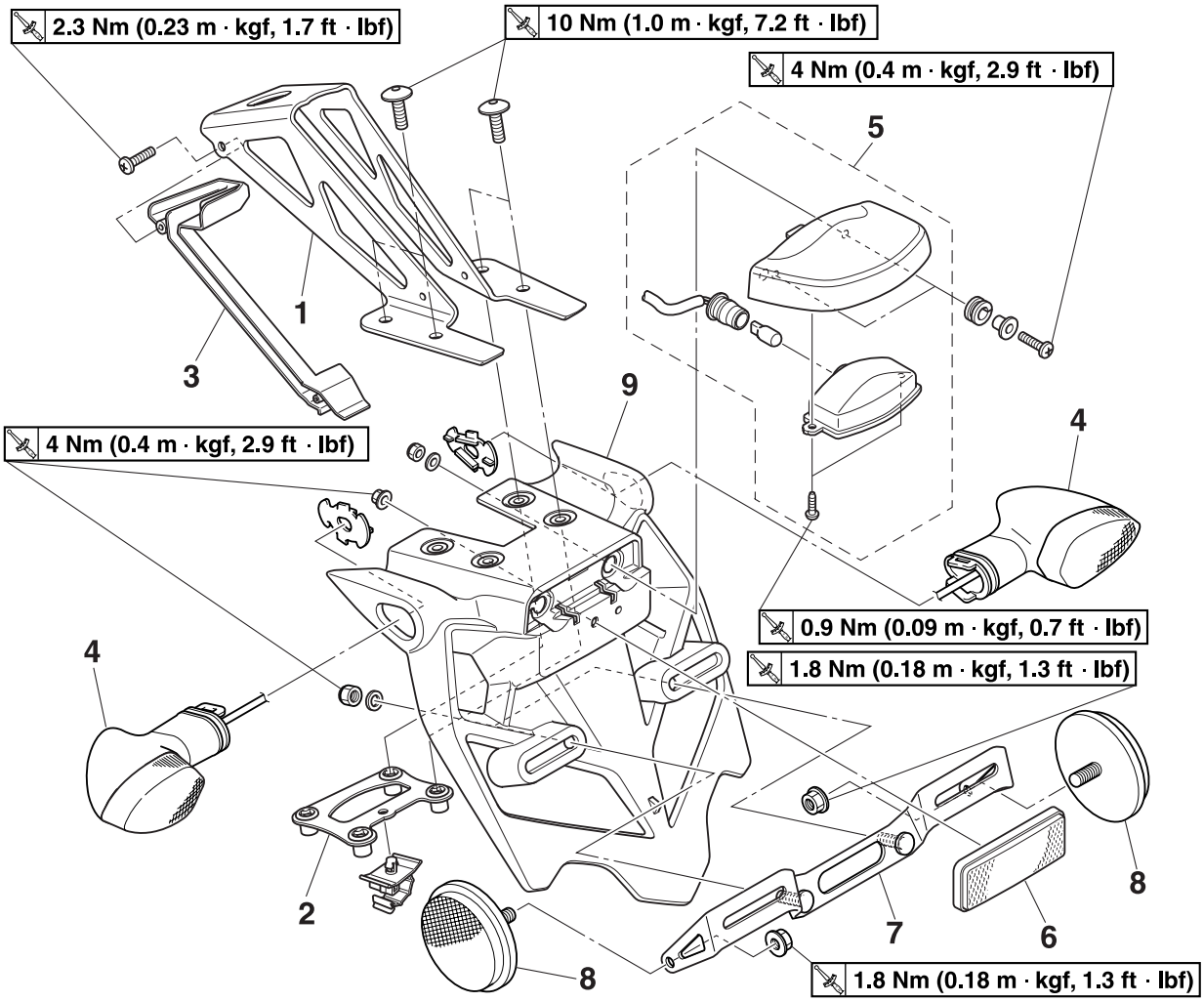

Order	Job/Parts to remove	Q'ty	Remarks
1	License plate/turn signal light stay	1	
2	License plate/turn signal light stay plate	1	
3	Cover	1	
4	Rear turn signal light	2	
5	License plate light	1	
6	Rear reflector	1	
7	Side reflector bracket	1	
8	Side reflector	2	
9	Mudguard	1	
			For installation, reverse the removal procedure.

EAS14B1029
REMOVING THE QUICK FASTENER (SCREW TYPE)

TIP

To remove the quick fastener, turn its center with a screwdriver counterclockwise, then pull the fastener out.

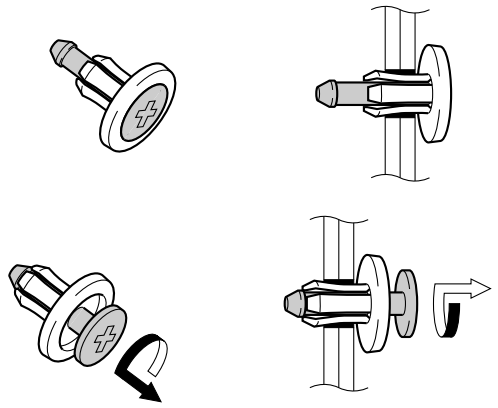

EAS14B1030
INSTALLING THE QUICK FASTENER (SCREW TYPE)

TIP

To install the quick fastener, turn its screw counterclockwise so that it protrudes from the fastener head, then insert the fastener into the cover and turn the screw “a” clockwise in with a screwdriver. Make sure that the screw is flush with the fastener’s head.

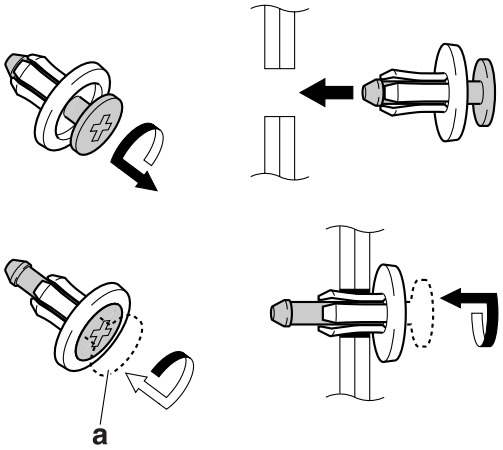

EAS14B1031
REMOVING THE QUICK FASTENER (PUSH TYPE)

TIP

To remove the quick fastener, push its center with a screwdriver, then pull the fastener out.

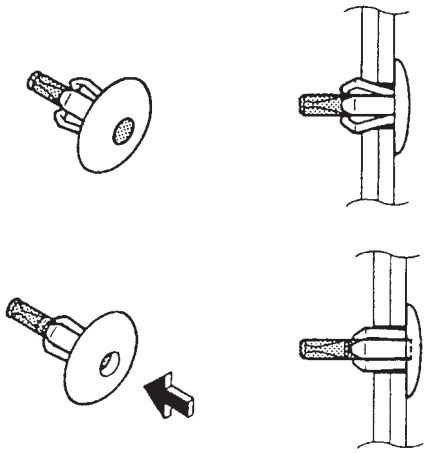

EAS14B1032
INSTALLING THE QUICK FASTENER (PUSH TYPE)

TIP

To install the quick fastener, push its pin so that it protrudes from the fastener head, then insert the fastener into the cover and push the pin “a” in with screwdriver. Make sure that the pin is flush with the fastener’s head.

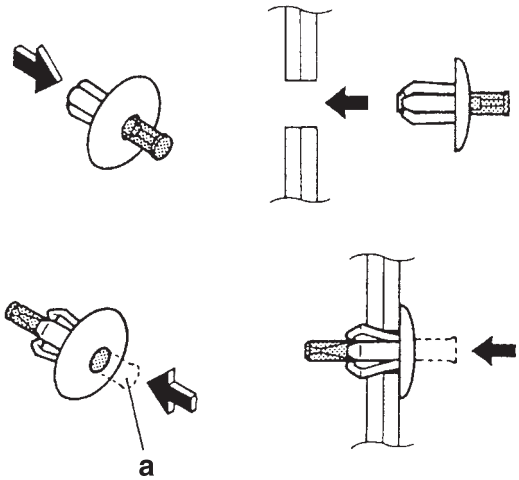

EAS14B1103
REMOVING THE QUICK FASTENER (PULL TYPE)

TIP

To remove the quick fastener, pull the pin “a”, then pull the fastener out.

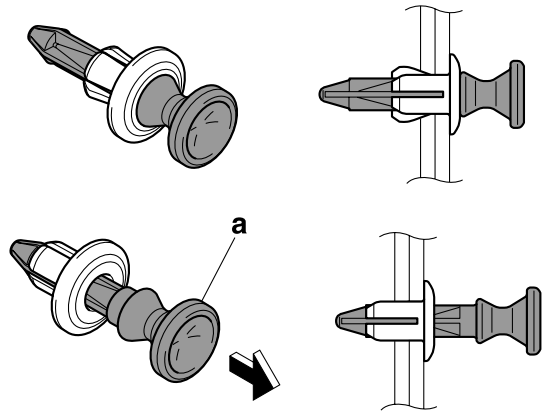

EAS14B1104
INSTALLING THE QUICK FASTENER (PULL TYPE)

TIP

To install the quick fastener, pull the pin, then insert the fastener into the cover and push the pin “a”. Make sure to insert the fastener until it is locked.

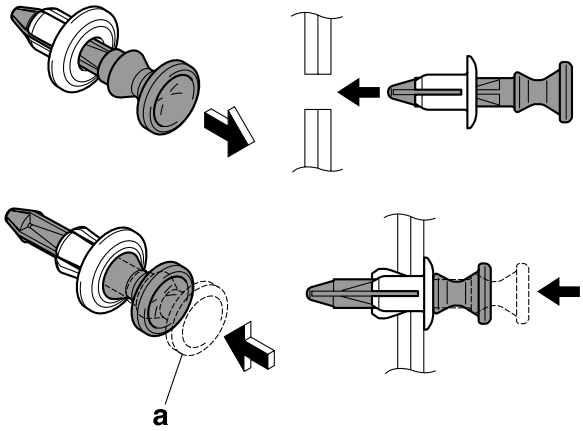

EAS14B1037
INSTALLING THE PASSENGER SEAT LOCK CYLINDER

1. Install:
   - Seat lock key cylinder “1”
   - Lock stay “2”
   - Lock spring “3”

TIP

Align the projection “a” of the passenger seat lock key cylinder “1” to the grooves “b” of the lower tail cover and lock stay “2” and install.

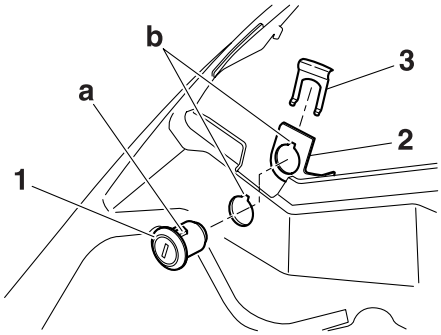

EAS14B1038
REMOVING THE FRONT TURN SIGNAL/ POSITION LIGHTS

1. Remove:
   - Stay “1”
   - Front turn signal/position light “2”

TIP

Remove the stay “1” first and then remove the front turn signal/position light “2” from the side cowling.

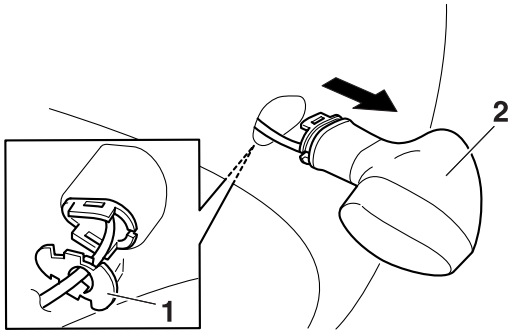

EAS14B1039
INSTALLING THE FRONT TURN SIGNAL/ POSITION LIGHTS

1. Install:
   - Front turn signal/position light “1”
   - Stay “2”

TIP

Insert the flasher stay tabs “a” into the front turn signal/position light grooves “b”.

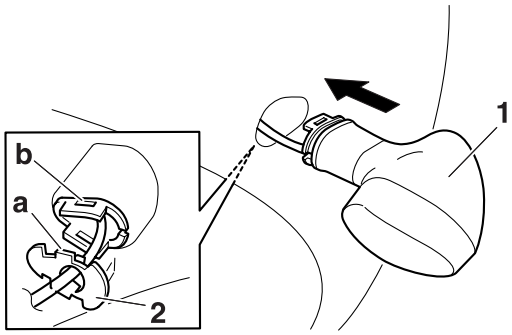

EAS14B1040
REMOVING THE LOWER COWLINGS
1. Remove:
   - Lower cowling “1”

TIP
Slide the lower cowling to the forward and remove.

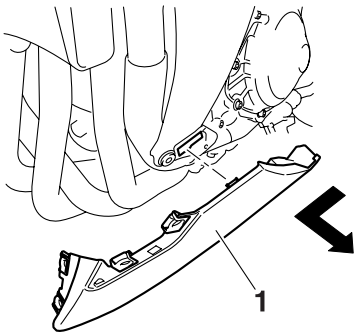

EAS14B1041
INSTALLING THE LOWER COWLINGS
1. Install:
   - Lower cowling “1”

TIP
Insert the lower cowling tab “a” into the inner panel hole “b” and slide back.

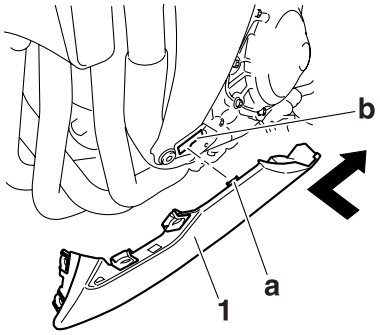

EAS14B1042
REMOVING THE SIDE COWLING INNER PANELS
1. Remove:
   - Side cowling inner panel “1”

TIP
When removing the side cowling inner panel downward, pull out the side cowling inner panel hole from the projection “a” of the air chamber cover “2”.

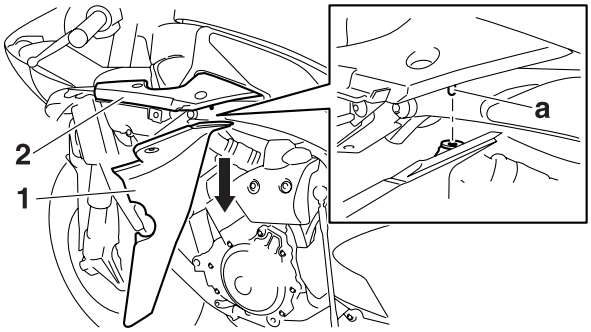

EAS14B1043
INSTALLING THE SIDE COWLING INNER PANELS
1. Install:
   - Side cowling inner panel “1”

TIP
Install the grommet “2” to the side cowling inner panel and insert them into the projection “a” of the air chamber cover “3”.

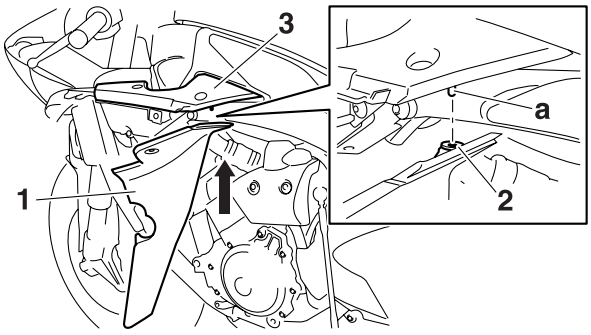

EAS14B1044
REMOVING THE AIR CHAMBER COVERS
1. Remove:
   - Air chamber cover “1”

TIP
Pull out the air chamber cover tab “a” upward from the hole “b” of the air chamber “2”.

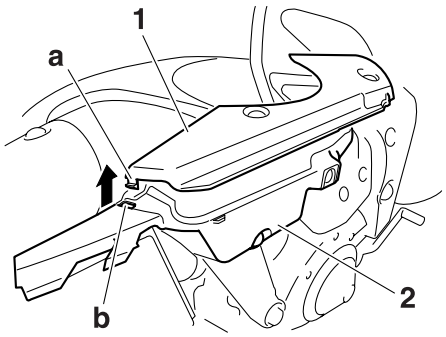

EAS14B1045
INSTALLING THE AIR CHAMBER COVERS
1. Install:
   - Air chamber cover “1”

TIP
Insert the air chamber cover tab “a” downward into the hole “b” of the air chamber “2”.

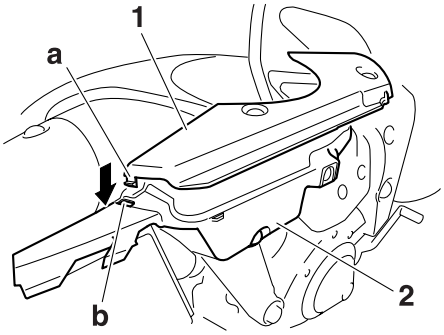

EAS14B1046
REMOVING THE INTAKE AIR DUCT COVERS
1. Remove:
   - Intake air duct cover “1”

TIP
Press the upper surface of the intake air duct cover tab “a” to inside of the vehicle and remove the intake air duct cover upward.

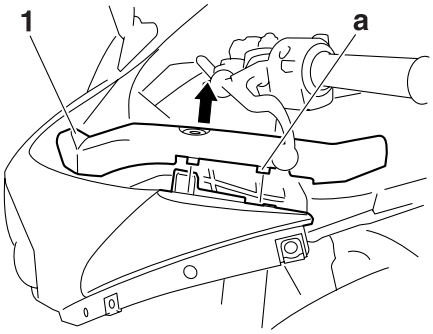

EAS14B1047
INSTALLING THE INTAKE AIR DUCT COVERS
1. Install:
   - Intake air duct cover “1”

TIP
Align the intake air duct cover tabs “a” and the tab “b” of the front cowling “2” as shown in the illustration and install.

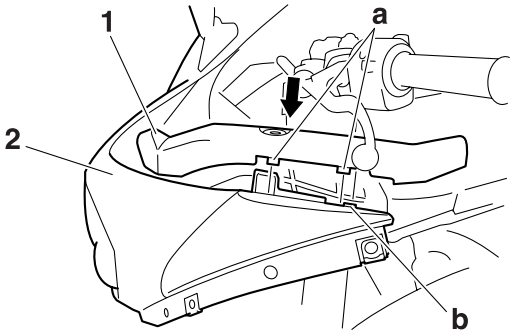

EAS14B1048
INSTALLING THE AIR INTAKE DUCTS
1. Install:
   - Rear air intake duct “1”
     (to front air intake duct “2”)

TIP
Insert the rear air intake duct tabs “a” into the front air intake duct grooves “b”.

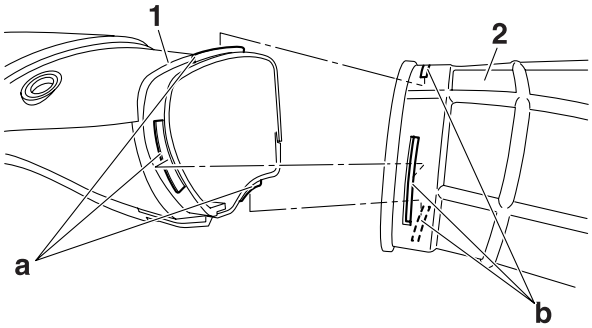

EAS14B1013
INSTALLING THE REAR VIEW MIRRORS
1. Install:
   - Rear view mirror “1”
     (along with the mirror base “2”)

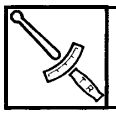

Rear view mirror nut
7 Nm (0.7 m·kgf, 5.1 ft·lbf)

TIP
Install the mirror base to the rear view mirror first, then install the rear view mirror to the front cowling.

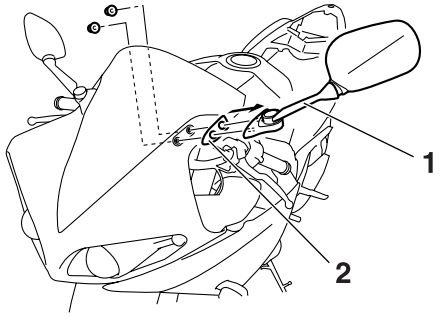

EAS14B1049
REMOVING THE WINDSHIELD
1. Remove:
   - Windshield “1”

TIP
- Slide the windshield to the back and remove from the front cowling.
- Remove the rear view mirror and then remove the windshield.

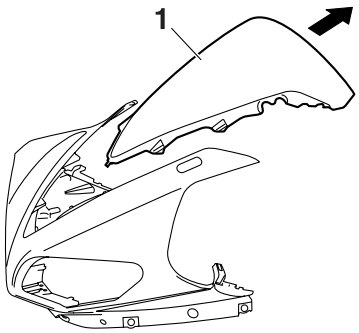

EAS14B1050
INSTALLING THE WINDSHIELD
1. Install:
   - Windshield “1”

TIP
Insert the windshield tabs “a” into the receptors of the front cowling “2”.

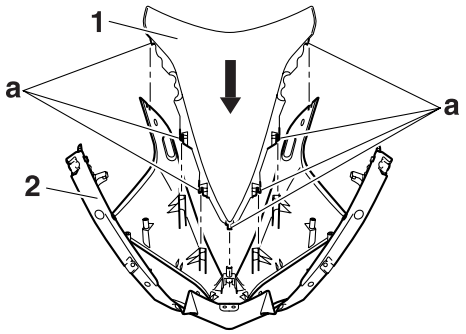

EAS14B1051
INSTALLING THE MIRROR FITTING PLATES
1. Install:
   - Mirror fitting plate “1” (to meter bracket “2”)

TIP
Face the mirror fitting plate concave “a” up and install it to the meter bracket.

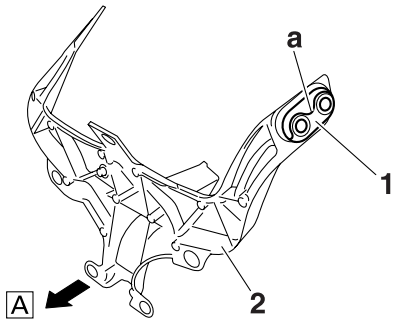

A. Front side

EAS14B1001
REMOVING THE UPPER TAIL COVER
1. Remove:
   - Rider seat
     Refer to “GENERAL CHASSIS” on page 4-1.
   - Passenger seat
     Refer to “GENERAL CHASSIS” on page 4-1.
2. Remove:
   - Upper tail cover “1”

▼▼▼▼▼▼▼▼▼▼▼▼▼▼▼▼▼▼▼▼▼▼▼▼▼▼▼▼▼▼▼▼▼▼

a. Remove the bolt on the upper tail cover.
b. Remove the quick fasteners on the upper tail cover.
c. Slide the upper tail cover to the back, remove the tabs “2” of the upper tail cover from the lower tail cover tabs, and then lift the cover up a little.

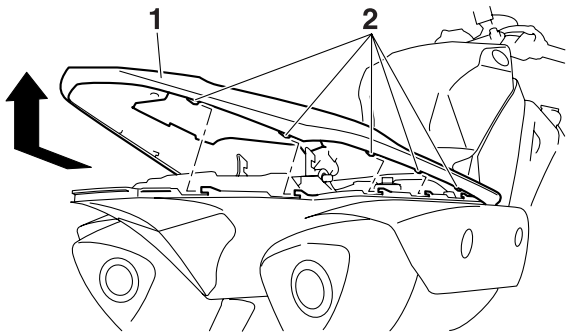

d. Slide the upper tail cover forward and remove.

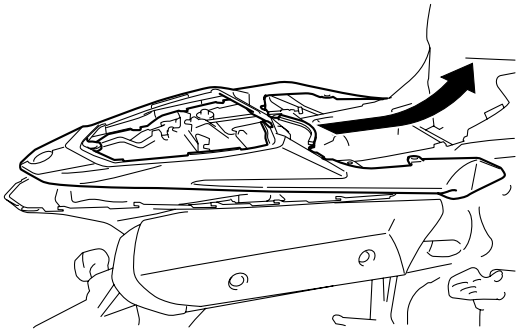

▲▲▲▲▲▲▲▲▲▲▲▲▲▲▲▲▲▲▲▲▲▲▲▲▲▲▲▲▲▲

EAS14B1002
INSTALLING THE UPPER TAIL COVER

1. Install:
   - Upper tail cover “1”

▼▼▼▼▼▼▼▼▼▼▼▼▼▼▼▼▼▼▼▼▼▼▼▼▼▼▼▼▼▼

a. Install the upper tail cover from the front of the lower tail cover “2” and slide to the back.

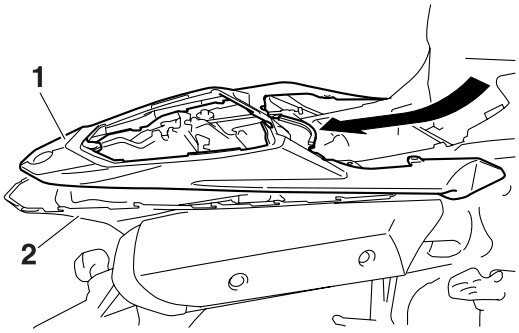

b. Put the upper tail cover down, align the tabs “3” of the upper tail cover to the lower tail cover tabs, and then slide the upper tail cover forward.

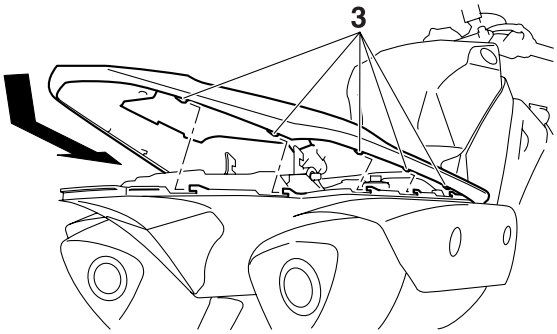

c. Install the quick fasteners on the upper tail cover.
d. Install the bolt on the upper tail cover.

▲▲▲▲▲▲▲▲▲▲▲▲▲▲▲▲▲▲▲▲▲▲▲▲▲▲▲▲▲▲

2. Install:
   - Passenger seat
     Refer to “GENERAL CHASSIS” on page 4-1.
   - Rider seat
     Refer to “GENERAL CHASSIS” on page 4-1.

EAS14B1054
INSTALLING THE TAIL/BRAKE LIGHT

1. Install:
   - Tail/brake light “1”

TIP

Fit the tail/brake light tabs “a” into the holes “b” of the lower tail cover “2”.

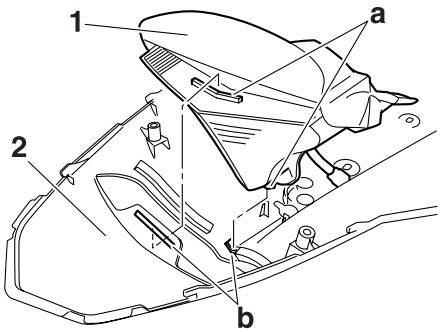

EAS14B1056
ADJUSTING THE RIDER FOOTRESTS

1. Remove:
   - Rider footrest (right and left)

EWA14B1018

⚠ WARNING

When removing the right rider footrest “1”, be careful not to burn with the exhaust chamber “2”.

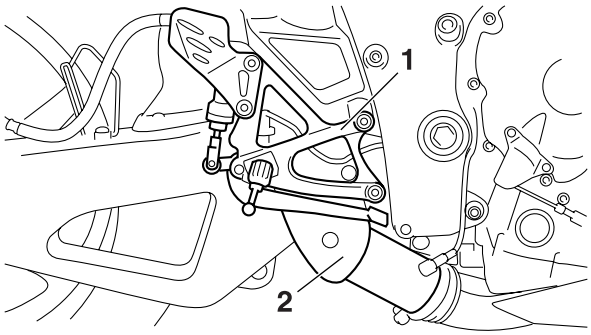

2. Adjust:
   - Rider footrest position (right and left)

▼▼▼▼▼▼▼▼▼▼▼▼▼▼▼▼▼▼▼▼▼▼▼▼▼▼▼▼▼▼

a. Remove the rider footrest bolts.
b. When adjusting the right rider footrest, change the position of the hole “a” of the

exhaust chamber cover “1” and then install it to the right rider footrest “2”.

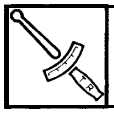	**Exhaust chamber cover bolt** **7 Nm (0.7 m·kgf, 5.1 ft·lbf)**

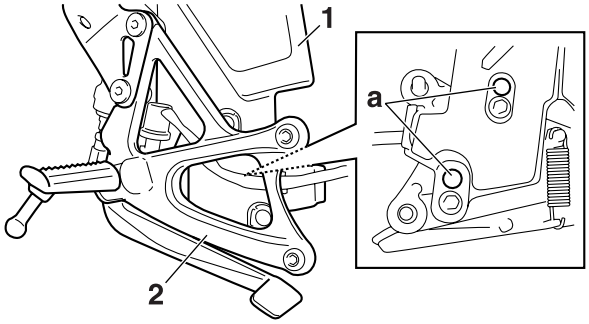

c. Adjusting the right rider footrest “1”.

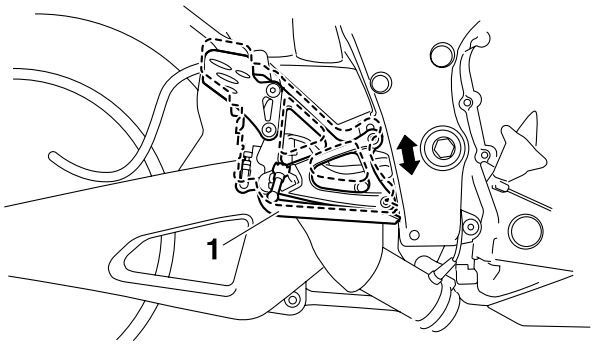

d. Adjusting the left rider footrest “1”.

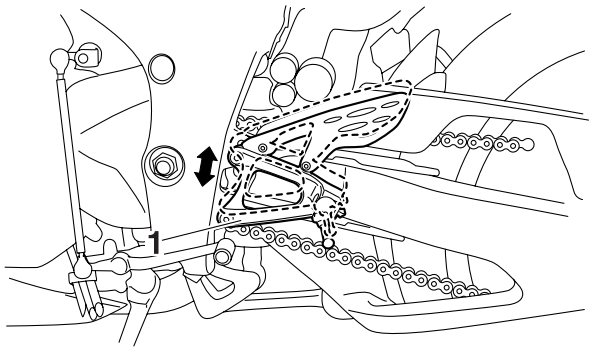

ECA14B1024

NOTICE

Route the rear brake light switch lead through the groove “1” of the right rider footrest and groove “2” of the exhaust chamber cover.

TIP

When adjusting the left and right rider footrest, be sure to set them on the same level.

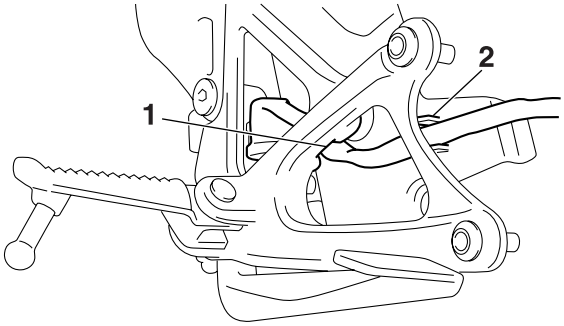

e. Install the rider footrest bolts.

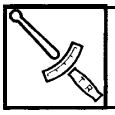	**Rider footrest bolt** **28 Nm (2.8 m·kgf, 20 ft·lbf)**

TIP

- Install the end “a” of the exhaust chamber cover “1” within the range “b” of the exhaust chamber upper cover “2” as shown in the illustration.
- After adjusting the right rider footrest, adjust the rear brake pedal and rear brake light switch.
  Refer to “ADJUSTING THE REAR DISC BRAKE” on page 3-15.
  Refer to “ADJUSTING THE REAR BRAKE LIGHT SWITCH” on page 3-32.

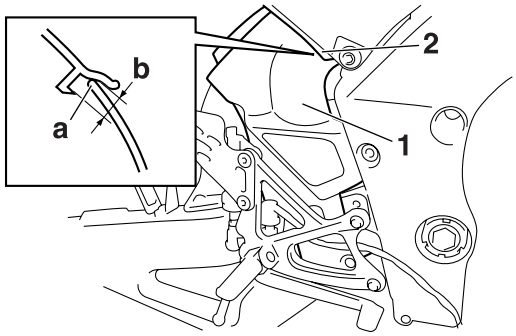

▲▲▲▲▲▲▲▲▲▲▲▲▲▲▲▲▲▲▲▲▲▲▲▲▲▲▲▲▲▲▲▲

EAS21870

FRONT WHEEL

Removing the front wheel and brake discs

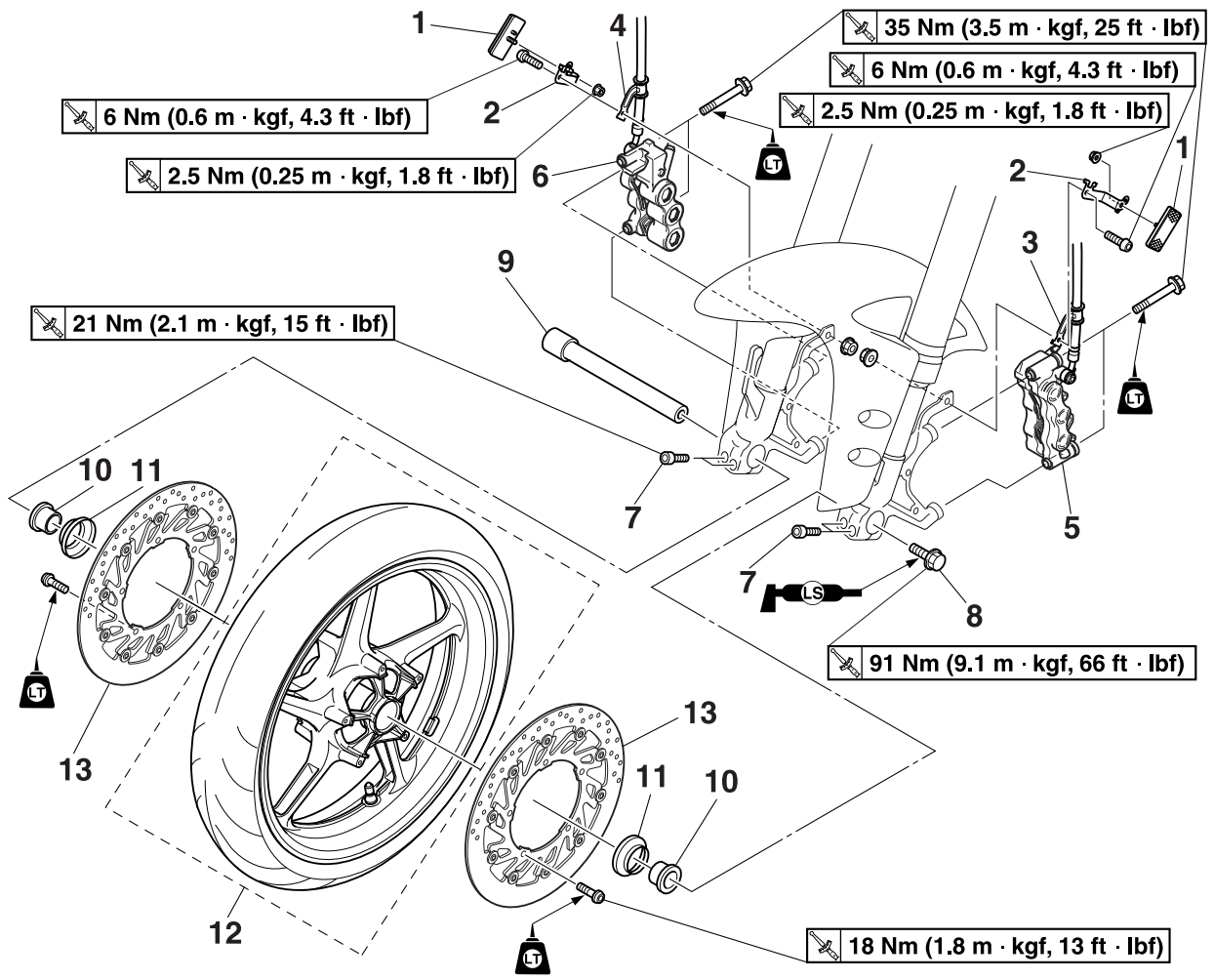

Order	Job/Parts to remove	Q'ty	Remarks
1	Reflector	2	
2	Reflector bracket	2	
3	Left brake hose holder	1	
4	Right brake hose holder	1	
5	Left front brake caliper	1	
6	Right front brake caliper	1	
7	Front wheel axle pinch bolt	4	Loosen.
8	Front wheel axle bolt	1	
9	Front wheel axle	1	
10	Collar (left and right)	2	
11	Dust cover (left and right)	2	
12	Front wheel	1	
13	Front brake disc (left and right)	2	
			For installation, reverse the removal procedure.

Disassembling the front wheel

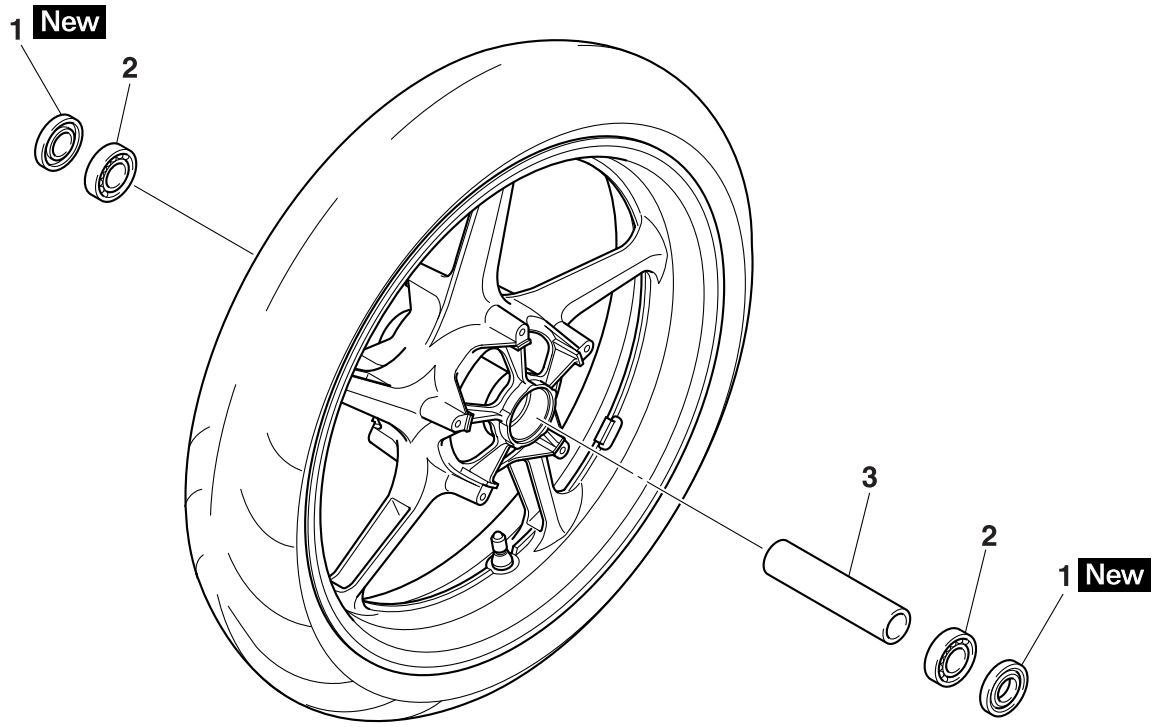

Order	Job/Parts to remove	Q'ty	Remarks
1	Oil seal (left and right)	2	
2	Wheel bearing (left and right)	2	
3	Spacer	1	
			For assembly, reverse the disassembly procedure.

EAS21900
REMOVING THE FRONT WHEEL

1. Stand the vehicle on a level surface.

EWA13120
WARNING

Securely support the vehicle so that there is no danger of it falling over.

TIP
Place the vehicle on a suitable stand so that the front wheel is elevated.

2. Remove:
   - Left brake caliper
   - Right brake caliper

TIP
Do not apply the brake lever when removing the brake calipers.

3. Elevate:
   - Front wheel

TIP
Place the vehicle on a suitable stand so that the front wheel is elevated.

4. Loosen:
   - Front wheel axle pinch bolt
5. Remove:
   - Front wheel axle bolt
   - Front wheel axle
   - Front wheel

EAS21920
CHECKING THE FRONT WHEEL

1. Check:
   - Wheel axle
     Roll the wheel axle on a flat surface.
     Bends → Replace.

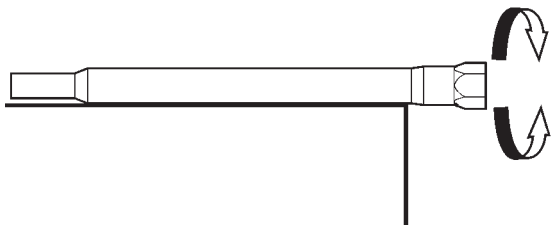

EWA13460
WARNING

Do not attempt to straighten a bent wheel axle.

2. Check:
   - Tire
   - Front wheel
     Damage/wear → Replace.
     Refer to “CHECKING THE TIRES” on page 3-17 and “CHECKING THE WHEELS” on page 3-17.
3. Measure:
   - Radial wheel runout “1”
   - Lateral wheel runout “2”
     Over the specified limits → Replace.

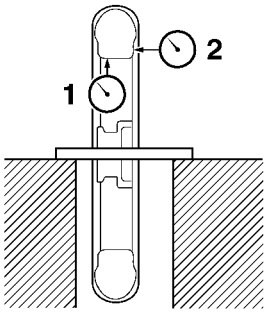

Radial wheel runout limit
1.0 mm (0.04 in)
Lateral wheel runout limit
0.5 mm (0.02 in)

4. Check:
   - Wheel bearings
     Front wheel turns roughly or is loose → Replace the wheel bearings.
   - Oil seals
     Damage/wear → Replace.

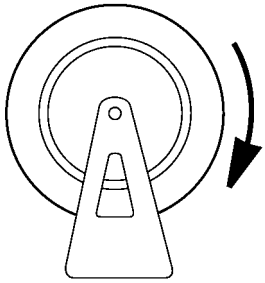

5. Replace:
   - Wheel bearings New
   - Oil seals New

▼▼▼▼▼▼▼▼▼▼▼▼▼▼▼▼▼▼▼▼▼▼▼▼▼▼▼▼▼▼▼▼▼▼

a. Clean the outside of the front wheel hub.
b. Remove the oil seals “1” with a flat-head screwdriver.

TIP

To prevent damaging the wheel, place a rag “2” between the screwdriver and the wheel surface.

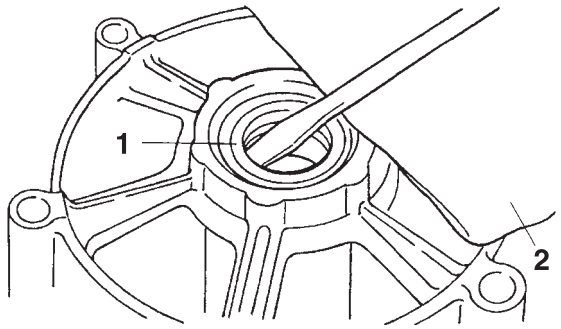

c. Remove the wheel bearings “3” with a general bearing puller.

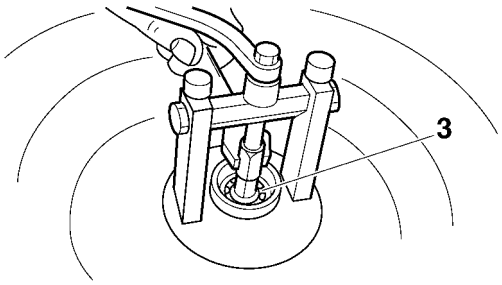

d. Install the new wheel bearings and oil seals in the reverse order of disassembly.

ECA14B1001

NOTICE

Do not contact the wheel bearing inner race “4” or balls “5”. Contact should be made only with the outer race “6”.

TIP

Use a socket “7” that matches the diameter of the wheel bearing outer race and oil seal.

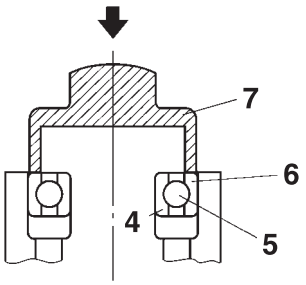

▲▲▲▲▲▲▲▲▲▲▲▲▲▲▲▲▲▲▲▲▲▲▲▲▲▲▲▲▲▲

EAS21970

ADJUSTING THE FRONT WHEEL STATIC BALANCE

TIP

- After replacing the tire, wheel or both, the front wheel static balance should be adjusted.
- Adjust the front wheel static balance with the brake disc installed.

1. Remove:
   - Balancing weight(s)
2. Find:
   - Front wheel’s heavy spot

TIP

Place the front wheel on a suitable balancing stand.

▼▼▼▼▼▼▼▼▼▼▼▼▼▼▼▼▼▼▼▼▼▼▼▼▼▼▼▼▼▼

a. Spin the front wheel.
b. When the front wheel stops, put an “X_1” mark at the bottom of the wheel.

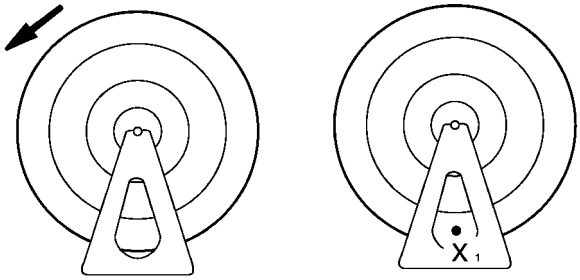

c. Turn the front wheel 90° so that the “X_1” mark is positioned as shown.
d. Release the front wheel.
e. When the wheel stops, put an “X_2” mark at the bottom of the wheel.

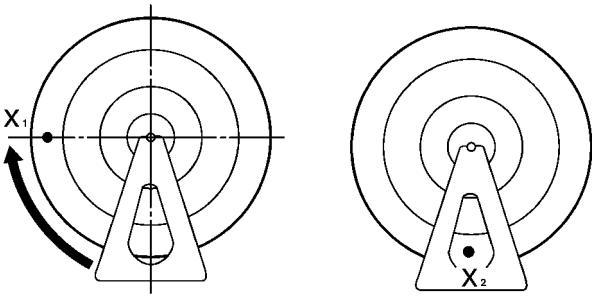

f. Repeat steps (d) through (f) several times until all the marks come to rest at the same spot.
g. The spot where all the marks come to rest is the front wheel’s heavy spot “X”.

▲▲▲▲▲▲▲▲▲▲▲▲▲▲▲▲▲▲▲▲▲▲▲▲▲▲▲▲▲▲

3. Adjust:
   - Front wheel static balance

▼▼▼▼▼▼▼▼▼▼▼▼▼▼▼▼▼▼▼▼▼▼▼▼▼▼▼▼▼▼▼▼

a. Install a balancing weight “1” onto the rim exactly opposite the heavy spot “X”.

TIP

Start with the lightest weight.

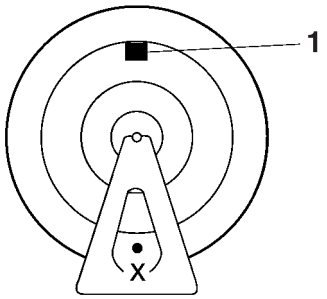

b. Turn the front wheel 90° so that the heavy spot is positioned as shown.

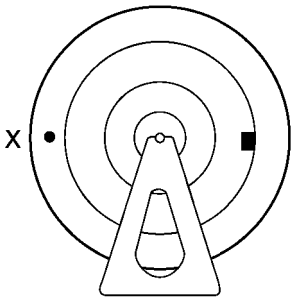

c. If the heavy spot does not stay in that position, install a heavier weight.
d. Repeat steps (b) and (c) until the front wheel is balanced.

▲▲▲▲▲▲▲▲▲▲▲▲▲▲▲▲▲▲▲▲▲▲▲▲▲▲▲▲▲▲▲▲

4. Check:
   - Front wheel static balance

▼▼▼▼▼▼▼▼▼▼▼▼▼▼▼▼▼▼▼▼▼▼▼▼▼▼▼▼▼▼▼▼

a. Turn the front wheel and make sure it stays at each position shown.

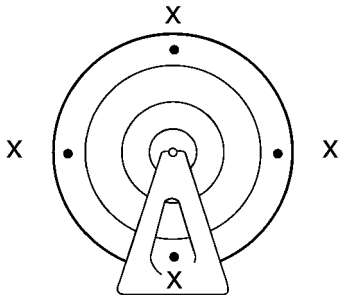

b. If the front wheel does not remain stationary at all of the positions, rebalance it.

▲▲▲▲▲▲▲▲▲▲▲▲▲▲▲▲▲▲▲▲▲▲▲▲▲▲▲▲▲▲▲▲

EAS22000

INSTALLING THE FRONT WHEEL

The following procedure applies to both of the brake discs.

1. Lubricate:
   - Wheel axle
   - Oil seal lips

	Recommended lubricant **Lithium-soap-based grease**

2. Lift the wheel up between the fork legs.
3. Insert the wheel axle.

TIP

Install the tire and wheel with the mark “1” pointing in the direction of wheel rotation.

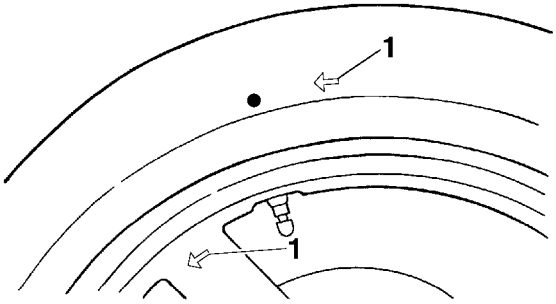

4. Lower the front wheel so that it is on the ground.
5. Tighten:
   - Front wheel axle bolt

	Front wheel axle bolt **91 Nm (9.1 m·kgf, 66 ft·lbf)**

   - Front wheel axle pinch bolt
     Refer to “CHASSIS TIGHTENING TORQUES” on page 2-20.

	Front wheel axle pinch bolt **21 Nm (2.1 m·kgf, 15 ft·lbf)**

ECA14B1002

NOTICE

Before tightening the wheel axle, push down hard on the handlebar(s) several times and check if the front fork rebounds smoothly.

6. Install:
   - Front brake calipers

	Front brake caliper bolt **35 Nm (3.5 m·kgf, 25 ft·lbf)** **LOCTITE®**

EWA13490

WARNING

Make sure the brake cable is routed properly.

TIP

Make sure that there is enough space between the brake pads before installing the brake calipers on to the brake discs.

EAS22020
REAR WHEEL

Removing the rear wheel

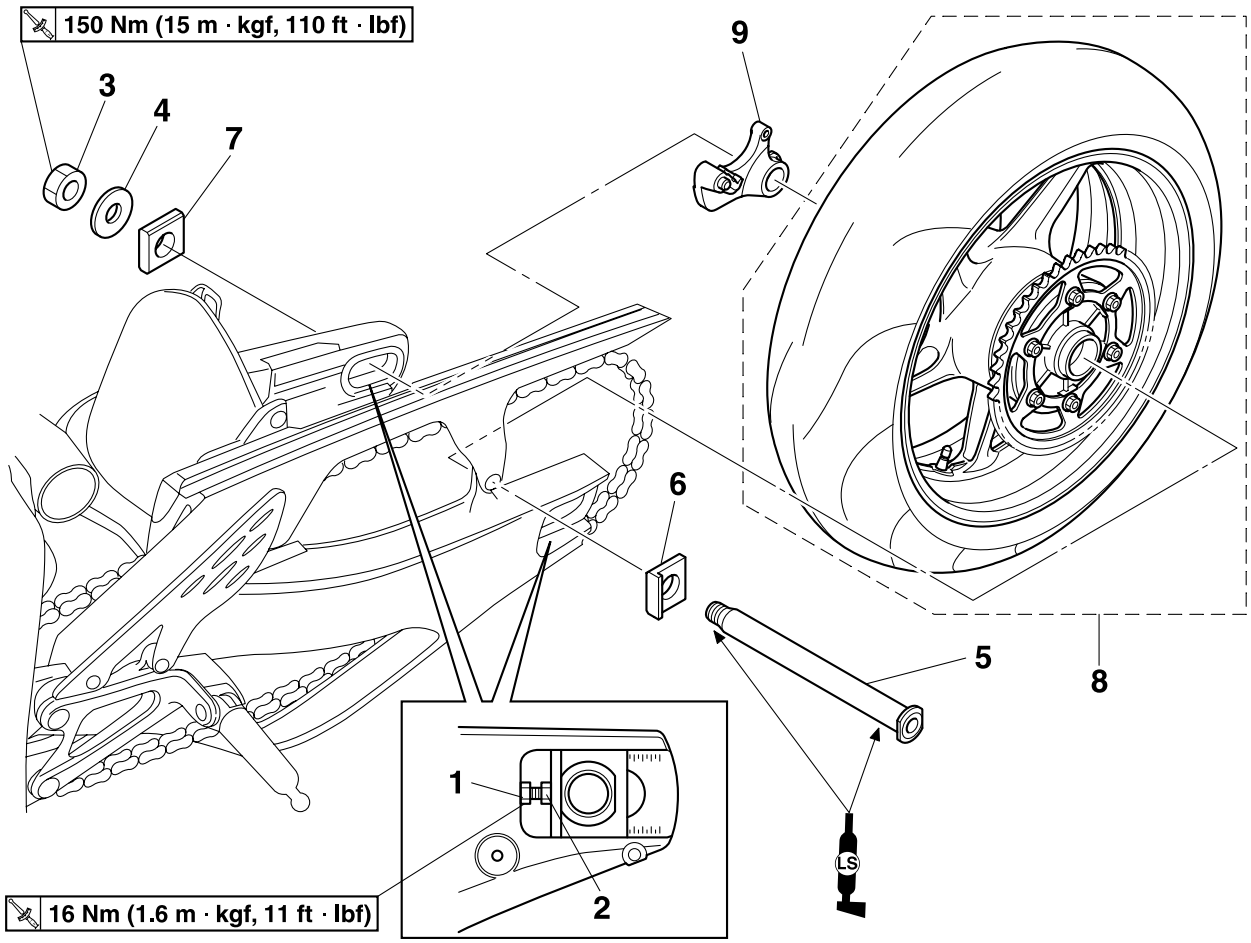

Order	Job/Parts to remove	Q'ty	Remarks
	Rear brake caliper		Refer to "REAR BRAKE" on page 4-43.
1	Locknut (left and right)	2	Loosen.
2	Adjusting bolt (left and right)	2	Loosen.
3	Rear wheel axle nut	1	
4	Washer	1	
5	Rear wheel axle	1	
6	Adjusting block (left)	1	
7	Adjusting block (right)	1	
8	Rear wheel	1	
9	Rear brake caliper bracket	1	
			For installation, reverse the removal procedure.

Removing the brake disc and rear wheel sprocket

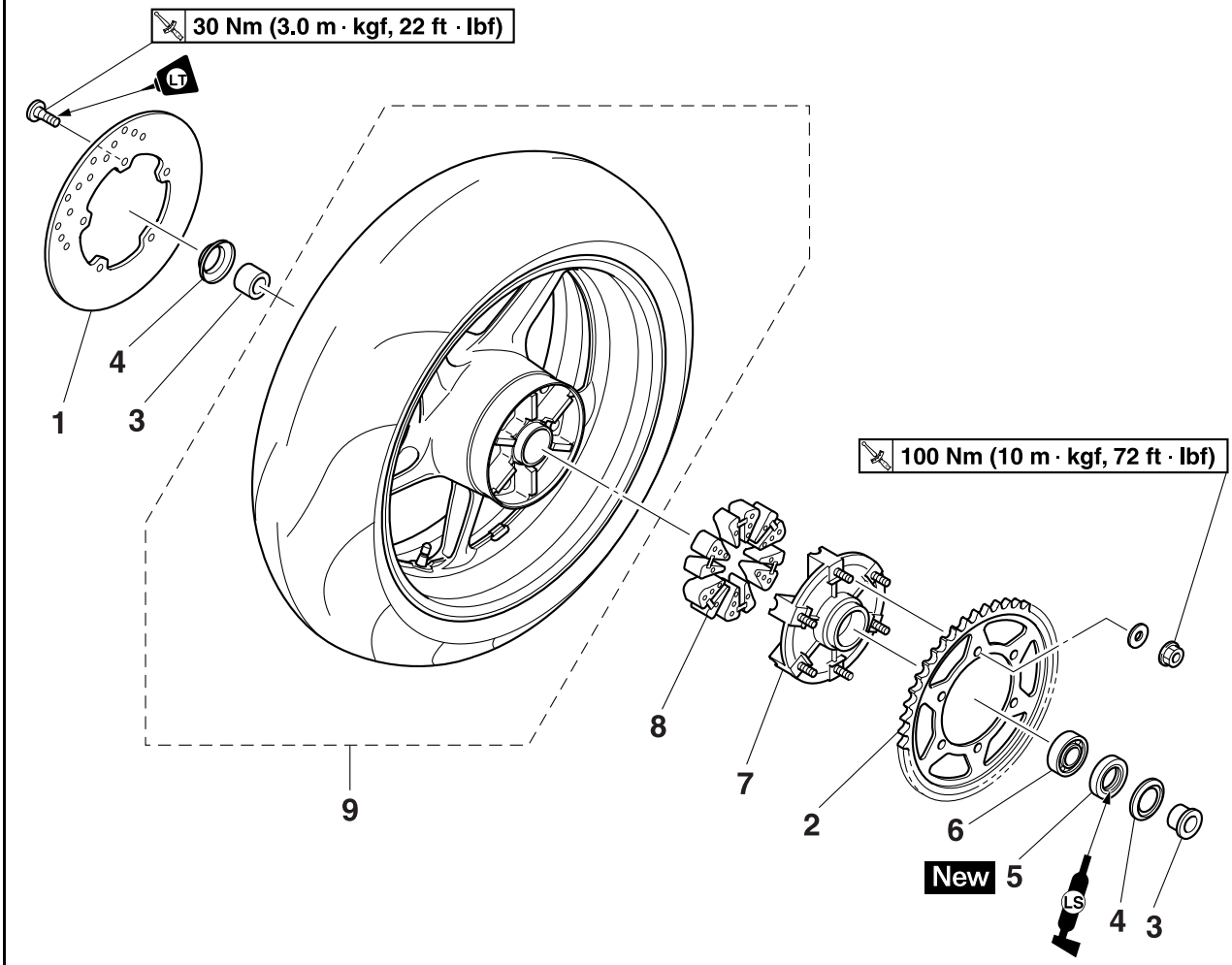

Order	Job/Parts to remove	Q'ty	Remarks
1	Rear brake disc	1	
2	Rear wheel sprocket	1	
3	Collar	2	
4	Dust cover	2	
5	Oil seal	1	
6	Bearing	1	
7	Rear wheel drive hub	1	
8	Rear wheel drive hub damper	6	
9	Rear wheel	1	
			For installation, reverse the removal procedure.

Disassembling the rear wheel

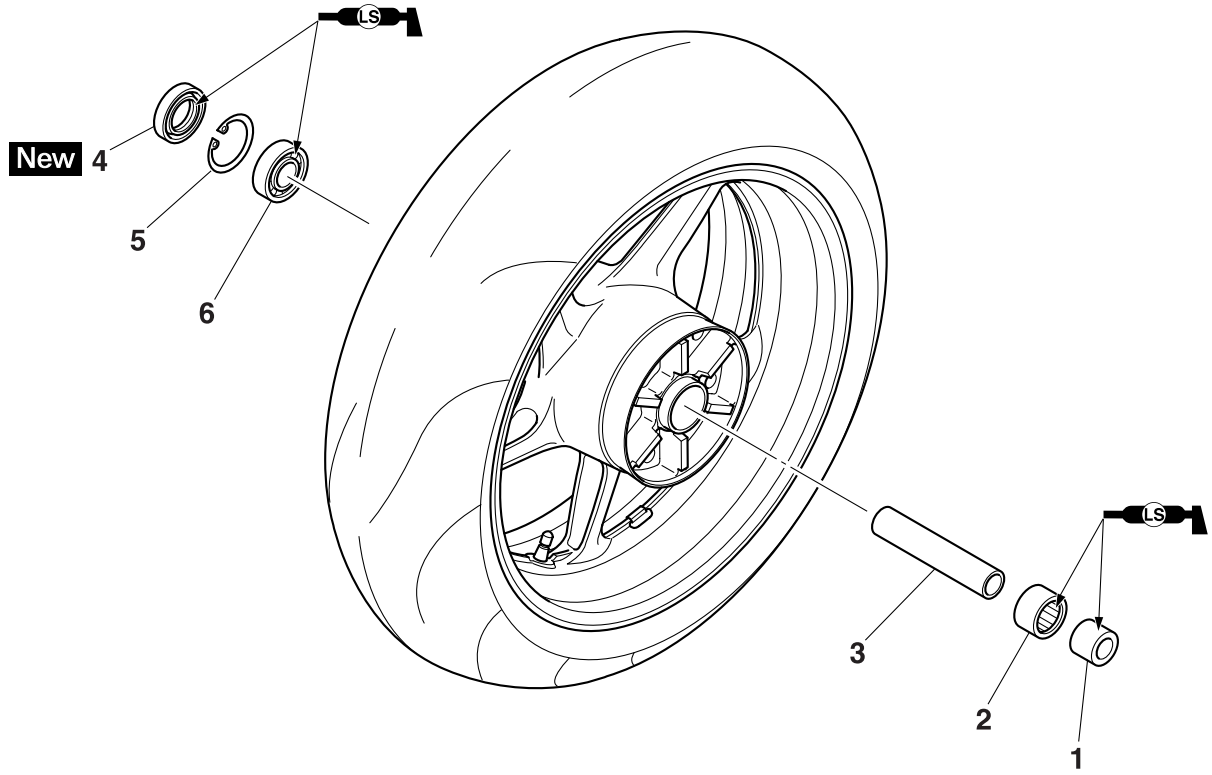

Order	Job/Parts to remove	Q'ty	Remarks
1	Collar	1	
2	Bearing	1	
3	Spacer	1	
4	Oil seal	1	
5	Circlip	1	
6	Bearing	1	
			For assembly, reverse the disassembly procedure.

EAS22040
REMOVING THE REAR WHEEL

1. Stand the vehicle on a level surface.

EWA13120
WARNING

Securely support the vehicle so that there is no danger of it falling over.

TIP
Place the vehicle on a suitable stand so that the rear wheel is elevated.

2. Remove:
   - Brake caliper “1”

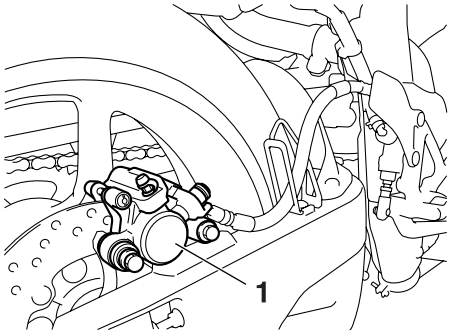

TIP
Do not depress the brake pedal when removing the brake caliper.

3. Loosen:
   - Locknuts “1”
   - Adjusting bolts “2”

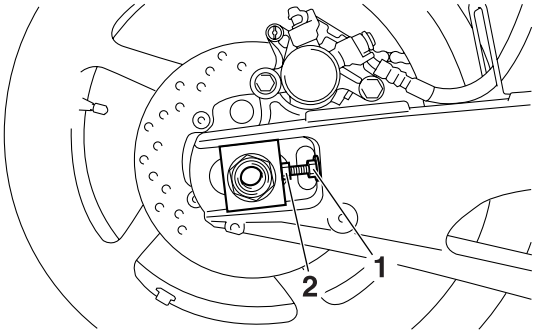

4. Remove:
   - Wheel axle nut “1”
   - Wheel axle
   - Rear wheel

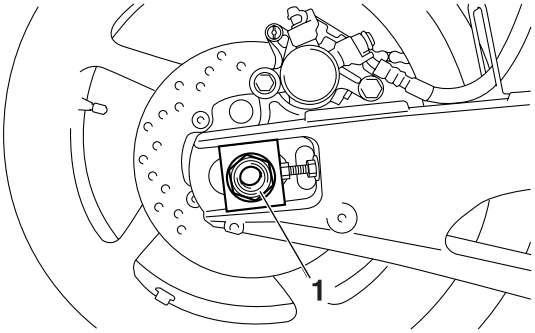

TIP
Push the rear wheel forward and remove the drive chain from the rear wheel sprocket.

5. Remove:
   - Left collar “1”
   - Rear wheel drive hub “2”
   - Rear wheel drive hub damper
   - Right collar

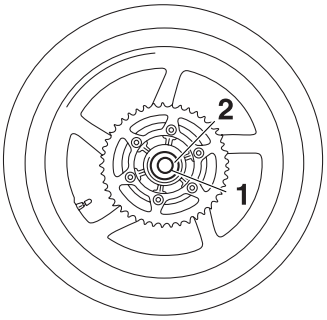

EAS22090
CHECKING THE REAR WHEEL

1. Check:
   - Wheel axle
   - Rear wheel
   - Wheel bearings
   - Oil seals
     Refer to “CHECKING THE FRONT WHEEL” on page 4-20.
2. Check:
   - Tire
   - Rear wheel
     Damage/wear → Replace.
     Refer to “CHECKING THE TIRES” on page 3-17 and “CHECKING THE WHEELS” on page 3-17.
3. Measure:
   - Radial wheel runout
   - Lateral wheel runout
     Refer to “CHECKING THE FRONT WHEEL” on page 4-20.

EAS22110
CHECKING THE REAR WHEEL DRIVE HUB

1. Check:
   - Rear wheel drive hub “1”
     Cracks/damage → Replace.
   - Rear wheel drive hub dampers “2”
     Damage/wear → Replace.

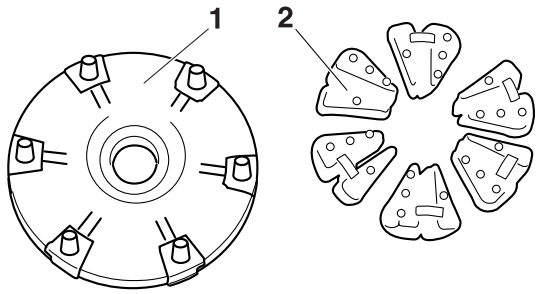

EAS14B1003
CHECKING AND REPLACING THE REAR WHEEL SPROCKET

1. Check:
   - Rear wheel sprocket
     More than 1/4 tooth “a” wear → Replace the drive chain sprockets as a set.
     Bent teeth → Replace the drive chain sprockets as a set.

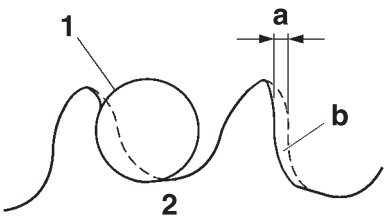

b. Correct

1. Drive chain roller
2. Rear wheel sprocket

2. Replace:
   - Rear wheel sprocket

▼▼▼▼▼▼▼▼▼▼▼▼▼▼▼▼▼▼▼▼▼▼▼▼▼▼▼▼▼▼▼▼

a. Remove the self-locking nuts and the rear wheel sprocket.
b. Clean the rear wheel drive hub with a clean cloth, especially the surfaces that contact the sprocket.
c. Install the new rear wheel sprocket.

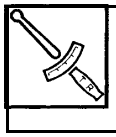

Rear wheel sprocket self-locking nut
100 Nm (10 m·kgf, 72 ft·lbf)

TIP

Tighten the self-locking nuts in stages and in a crisscross pattern.

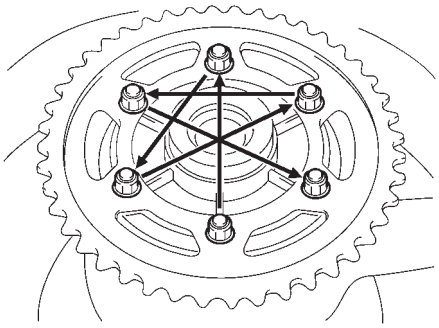

▲▲▲▲▲▲▲▲▲▲▲▲▲▲▲▲▲▲▲▲▲▲▲▲▲▲▲▲▲▲▲▲

EAS22150
ADJUSTING THE REAR WHEEL STATIC BALANCE

TIP

- After replacing the tire, wheel or both, the rear wheel static balance should be adjusted.
- Adjust the rear wheel static balance with the brake disc and rear wheel drive hub installed.

1. Adjust:
   - Rear wheel static balance
     Refer to “ADJUSTING THE FRONT WHEEL STATIC BALANCE” on page 4-21.

EAS22160
INSTALLING THE REAR WHEEL

1. Lubricate:
   - Wheel axle
   - Wheel bearings
   - Oil seal lips

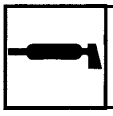

Recommended lubricant
Lithium-soap-based grease

2. Adjust:
   - Drive chain slack
     Refer to “ADJUSTING THE DRIVE CHAIN SLACK” on page 3-19.

Drive chain slack (when adjusting the drive chain)
25.0–35.0 mm (0.98–1.38 in)
Drive chain slack (when replacing the drive chain and sprocket)
20.0–30.0 mm (0.79–1.18 in)

3. Tighten:
   - Rear wheel axle nut
   - Rear brake caliper bolts

Rear wheel axle nut
150 Nm (15 m·kgf, 110 ft·lbf)
Rear brake caliper bolt (front side)
27 Nm (2.7 m·kgf, 19 ft·lbf)
Rear brake caliper bolt (rear side)
22 Nm (2.2 m·kgf, 16 ft·lbf)

EWA13500

WARNING

Make sure the brake hose is routed properly.

EAS22210

FRONT BRAKE

Removing the front brake pads

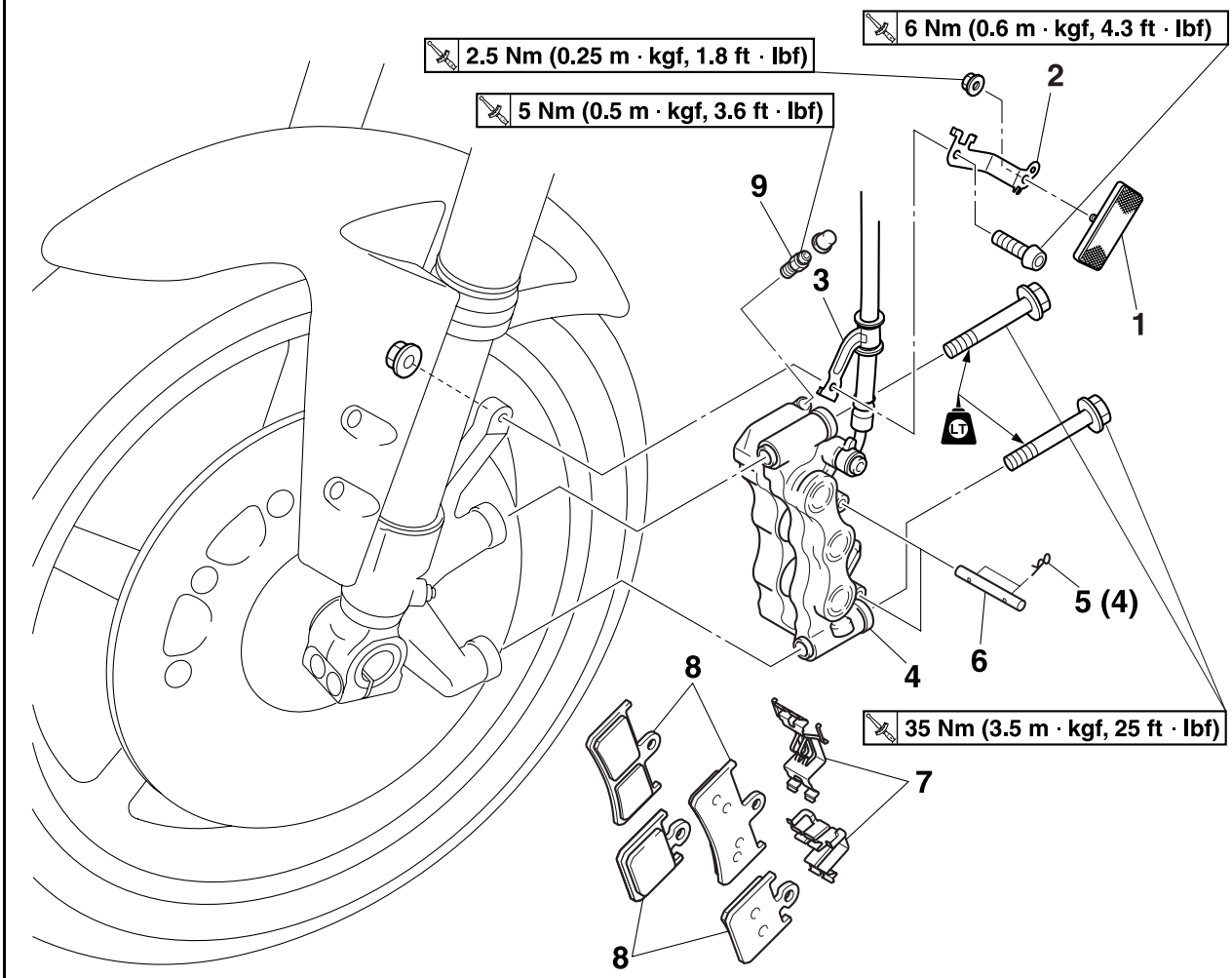

Order	Job/Parts to remove	Q'ty	Remarks
			The following procedure applies to both of the front brake calipers.
1	Reflector	1	
2	Reflector bracket	1	
3	Brake hose holder	1	
4	Front brake caliper	1	
5	Brake pad clip	4	
6	Brake pad pin	2	
7	Brake pad spring	2	
8	Brake pad	4	
9	Bleed screw	1	
			For installation, reverse the removal procedure.

Removing the front brake master cylinder

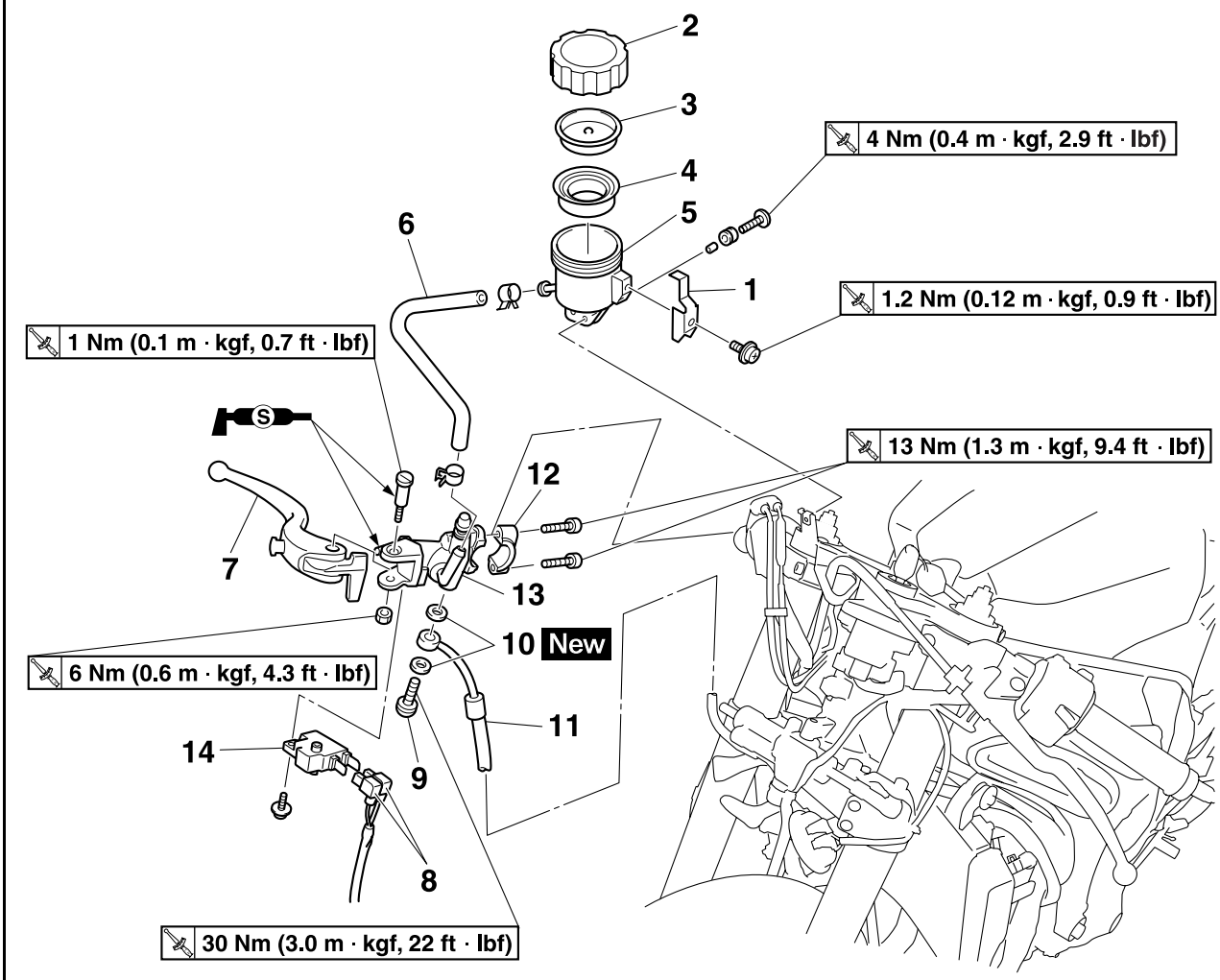

Order	Job/Parts to remove	Q'ty	Remarks
	Brake fluid		Drain. Refer to "BLEEDING THE HYDRAULIC BRAKE SYSTEM" on page 3-16.
1	Stopper	1	
2	Brake fluid reservoir cap	1	
3	Brake fluid reservoir diaphragm holder	1	
4	Brake fluid reservoir diaphragm	1	
5	Brake fluid reservoir tank	1	
6	Brake fluid reservoir hose	1	
7	Brake lever	1	
8	Front brake light switch connector	2	Disconnect.
9	Union bolt	1	
10	Washer	2	
11	Brake hose	1	
12	Brake master cylinder holder	1	
13	Brake master cylinder	1	
14	Front brake light switch	1	
			For installation, reverse the removal procedure.

Disassembling the front brake master cylinder

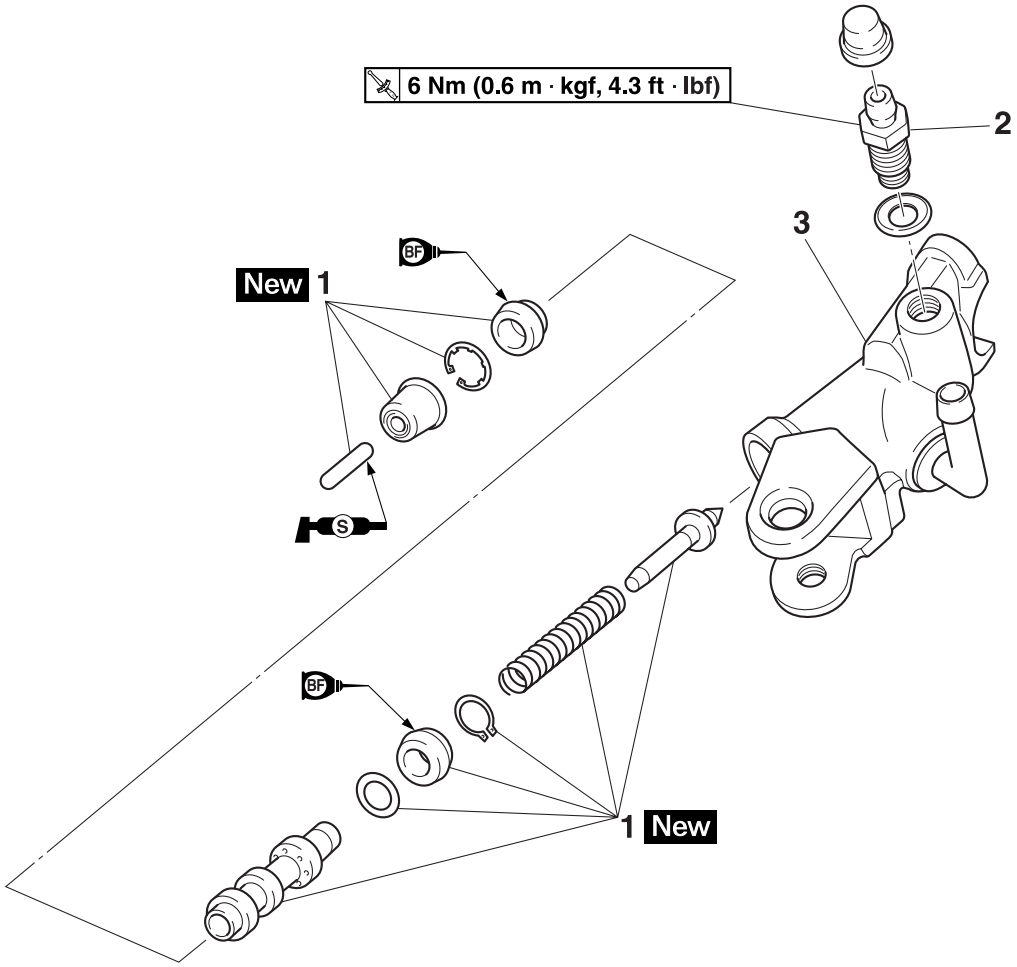

Order	Job/Parts to remove	Q'ty	Remarks
1	Brake master cylinder kit	1	
2	Bleed screw	1	
3	Brake master cylinder body	1	
			For installation, reverse the removal procedure.

Removing the front brake calipers

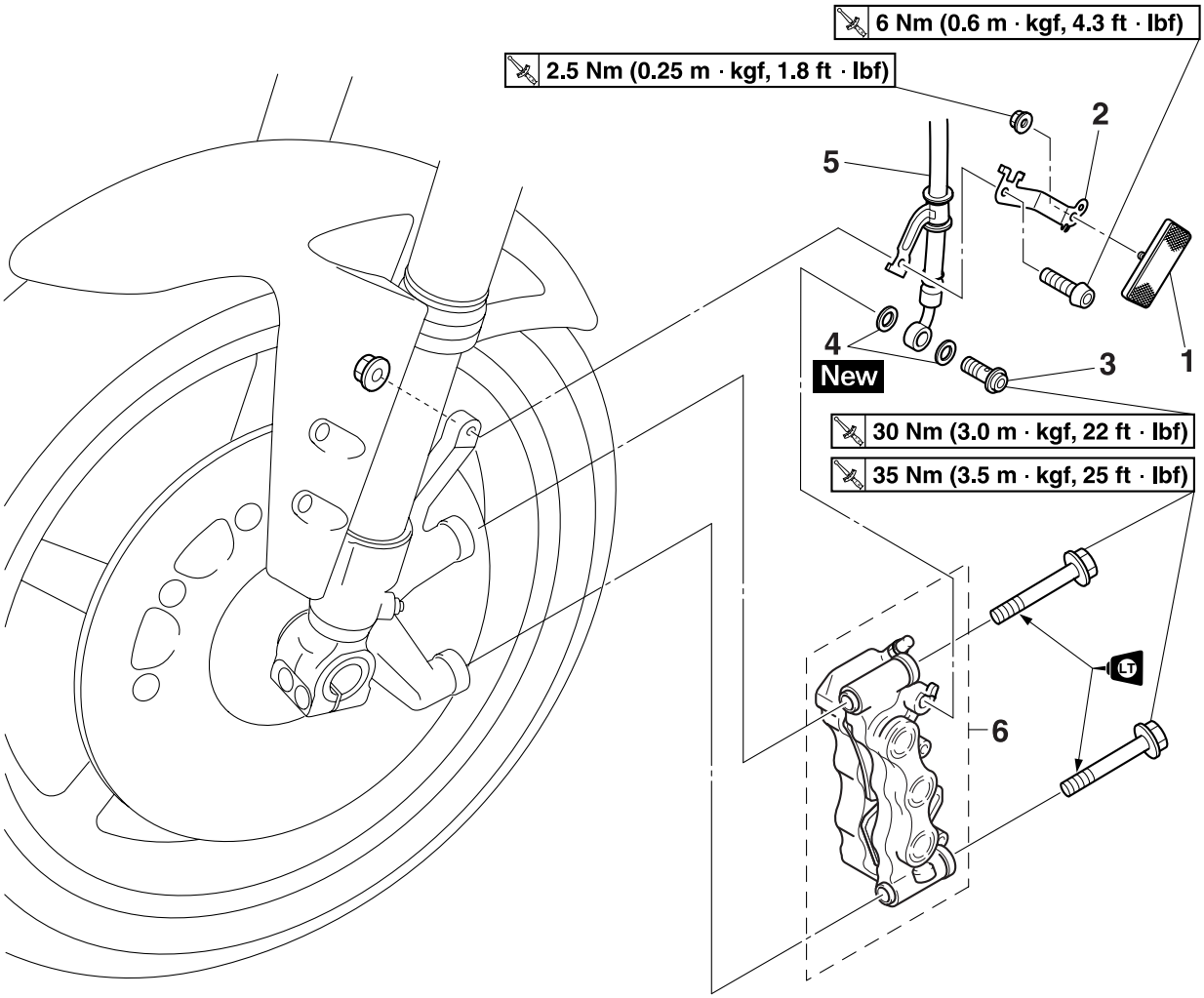

Order	Job/Parts to remove	Q'ty	Remarks
			The following procedure applies to both of the front brake calipers.
	Brake fluid		Drain. Refer to "BLEEDING THE HYDRAULIC BRAKE SYSTEM" on page 3-16.
1	Reflector	1	
2	Reflector bracket	1	
3	Union bolt	1	
4	Washer	2	
5	Brake hose	1	
6	Brake caliper	1	
			For installation, reverse the removal procedure.

Disassembling the front brake calipers

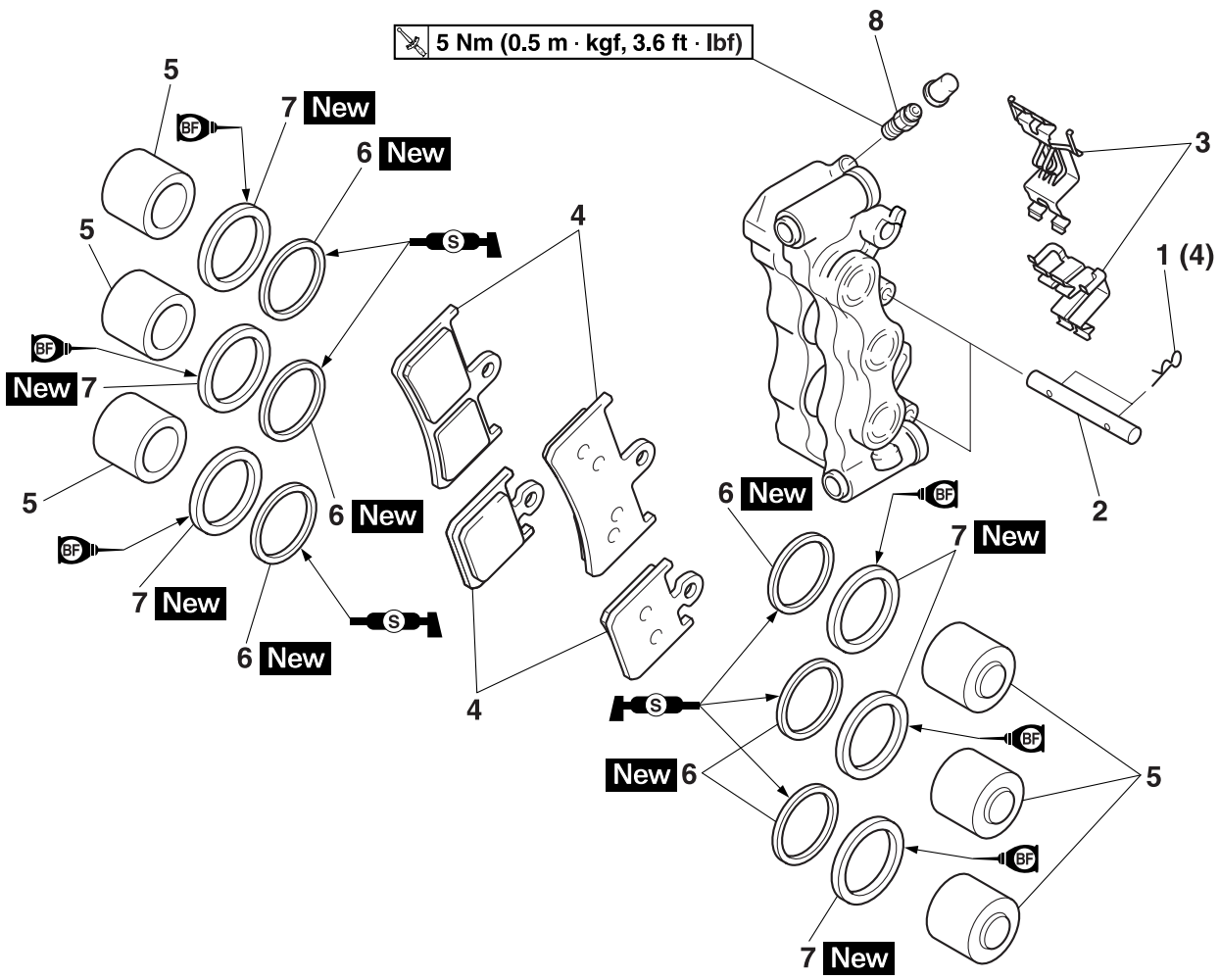

Order	Job/Parts to remove	Q'ty	Remarks
1	Brake pad clip	4	
2	Brake pad pin	2	
3	Brake pad spring	2	
4	Brake pad	4	
5	Brake caliper piston	6	
6	Brake caliper piston dust seal	6	
7	Brake caliper piston seal	6	
8	Bleed screw	1	
			For installation, reverse the removal procedure.

EAS22220

INTRODUCTION

EWA14100

⚠ WARNING

Disc brake components rarely require disassembly. Therefore, always follow these preventive measures:

- **Never disassemble brake components unless absolutely necessary.**
- **If any connection on the hydraulic brake system is disconnected, the entire brake system must be disassembled, drained, cleaned, properly filled, and bled after reassembly.**
- **Never use solvents on internal brake components.**
- **Use only clean or new brake fluid for cleaning brake components.**
- **Brake fluid may damage painted surfaces and plastic parts. Therefore, always clean up any spilt brake fluid immediately.**
- **Avoid brake fluid coming into contact with the eyes as it can cause serious injury.**
- **FIRST AID FOR BRAKE FLUID ENTERING THE EYES:**
- **Flush with water for 15 minutes and get immediate medical attention.**

EAS22240

CHECKING THE FRONT BRAKE DISCS

The following procedure applies to both brake discs.

1. Remove:
   - Front wheel
     Refer to “FRONT WHEEL” on page 4-18.
2. Check:
   - Brake discs
     Damage/galling → Replace.
3. Measure:
   - Brake disc deflection
     Out of specification → Correct the brake disc deflection or replace the brake disc.

Brake disc deflection limit
0.10 mm (0.0039 in)

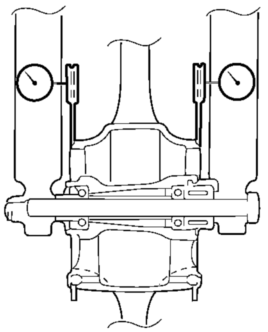

▼▼▼▼▼▼▼▼▼▼▼▼▼▼▼▼▼▼▼▼▼▼▼▼▼▼▼▼▼▼▼▼

a. Place the vehicle on a suitable stand so that the front wheel is elevated.
b. Before measuring the front brake disc deflection, turn the handlebar to the left or right to ensure that the front wheel is stationary.
c. Remove the brake caliper.
d. Hold the dial gauge at a right angle against the brake disc surface.
e. Measure the deflection 1.5 mm (0.06 in) below the edge of the brake disc.

▲▲▲▲▲▲▲▲▲▲▲▲▲▲▲▲▲▲▲▲▲▲▲▲▲▲▲▲▲▲▲▲

4. Measure:
   - Brake disc thickness
     Measure the brake disc thickness at a few different locations.
     Out of specification → Replace.

Brake disc thickness limit
4.5 mm (0.18 in)

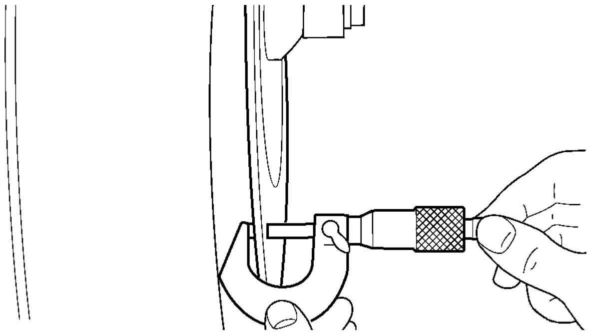

5. Adjust:
   - Brake disc deflection

▼▼▼▼▼▼▼▼▼▼▼▼▼▼▼▼▼▼▼▼▼▼▼▼▼▼▼▼▼▼▼▼

a. Remove the brake disc.
b. Rotate the brake disc by one bolt hole.
c. Install the brake disc.

TIP

- When installing the brake disc, align the arrow “1” on the brake disc and arrow “2” on the wheel in the direction of wheel rotation.
- Tighten the brake disc bolts in stages and in a crisscross pattern.

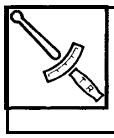

Brake disc bolt
18 Nm (1.8 m·kgf, 13 ft·lbf)
LOCTITE®

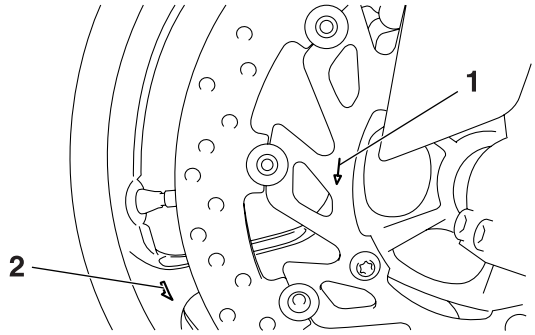

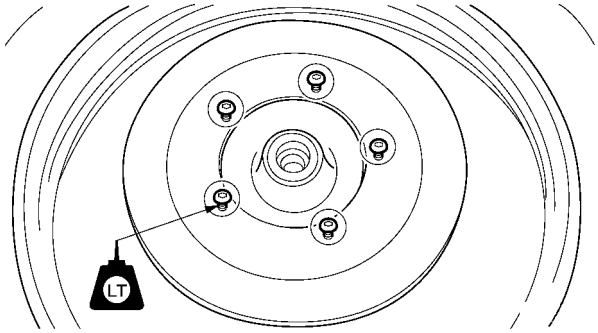

d. Measure the brake disc deflection.
e. If out of specification, repeat the adjustment steps (a) through (d) until the brake disc deflection is within specification.
f. If the brake disc deflection cannot be brought within specification, replace the brake disc.

▲▲▲▲▲▲▲▲▲▲▲▲▲▲▲▲▲▲▲▲▲▲▲▲▲▲▲▲▲▲▲▲

6. Install:
   - Front wheel
     Refer to “FRONT WHEEL” on page 4-18.

EAS14B1004

REPLACING THE FRONT BRAKE PADS

TIP

When replacing the brake pads, it is not necessary to disconnect the brake hose or disassemble the brake caliper.

1. Remove:
   - Brake hose holder “1”
   - Brake caliper “2”

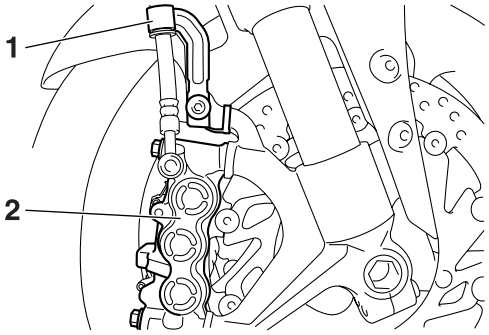

2. Remove:
   - Brake pad clips “1”
   - Brake pad pins “2”
   - Brake pad springs “3”

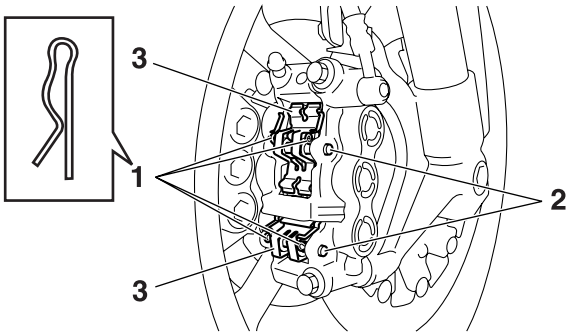

3. Remove:
   - Brake pads “1”

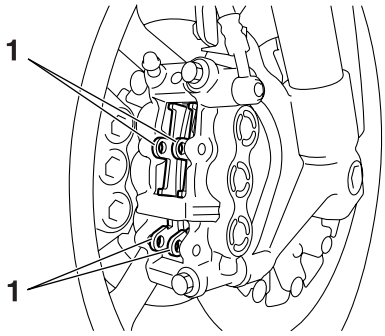

4. Measure:
   - Brake pad wear limit “a”
     Out of specification → Replace the brake pads as a set.

Brake pad lining thickness (inner)
4.5 mm (0.18 in)
Limit
0.8 mm (0.03 in)
Brake pad lining thickness (outer)
4.5 mm (0.18 in)
Limit
0.8 mm (0.03 in)

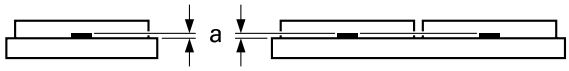

5. Install:
   - Brake pads
   - Brake pad springs

TIP
Always install new brake pads and a new brake pad spring as a set.

▼▼▼▼▼▼▼▼▼▼▼▼▼▼▼▼▼▼▼▼▼▼▼▼▼▼▼▼▼▼▼▼▼▼

a. Connect a clear plastic hose “1” tightly to the bleed screw “2”. Put the other end of the hose into an open container.

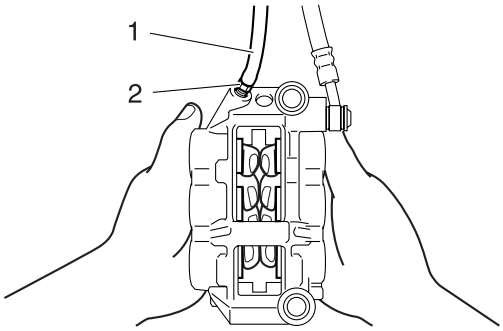

b. Loosen the bleed screw and push the brake caliper pistons into the brake caliper with your finger.
c. Tighten the bleed screw.

Bleed screw
5 Nm (0.5 m·kgf, 3.6 ft·lbf)

d. Install new brake pads and a new brake pad springs.

TIP
The arrow mark “a” on the brake pad springs must point in the direction of disc rotation.

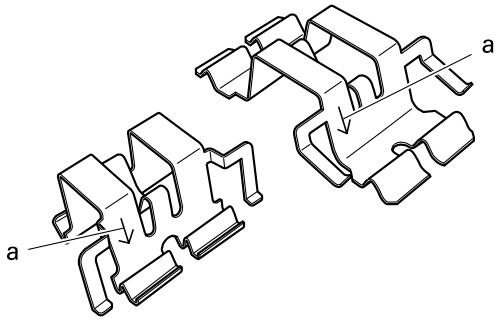

▲▲▲▲▲▲▲▲▲▲▲▲▲▲▲▲▲▲▲▲▲▲▲▲▲▲▲▲▲▲▲▲▲▲

6. Install:
   - Brake pad pins
   - Brake pad clips
   - Brake caliper

Front brake caliper bolt
35 Nm (3.5 m·kgf, 25 ft·lbf)
LOCTITE®

7. Check:
   - Brake fluid level
     Below the minimum level mark “a” → Add the recommended brake fluid to the proper level.
     Refer to “CHECKING THE BRAKE FLUID LEVEL” on page 3-13.

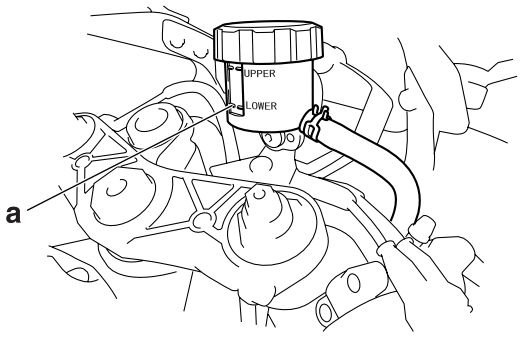

8. Check:
   - Brake lever operation
     Soft or spongy feeling → Bleed the brake system.
     Refer to “BLEEDING THE HYDRAULIC BRAKE SYSTEM” on page 3-16.

EAS22300
REMOVING THE FRONT BRAKE CALIPERS

The following procedure applies to both of the brake calipers.

TIP

Before removing the brake caliper, drain the brake fluid from the entire brake system.

1. Remove:
   - Union bolt “1”
   - Washers “2”
   - Brake hose “3”

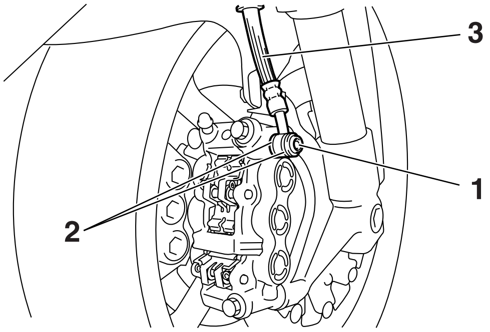

TIP

Put the end of the brake hose into a container and pump out the brake fluid carefully.

EAS22360

DISASSEMBLING THE FRONT BRAKE CALIPERS

The following procedure applies to both of the brake calipers.

1. Remove:
   - Brake caliper pistons “1”
   - Brake caliper piston dust seals “2”
   - Brake caliper piston seals “3”

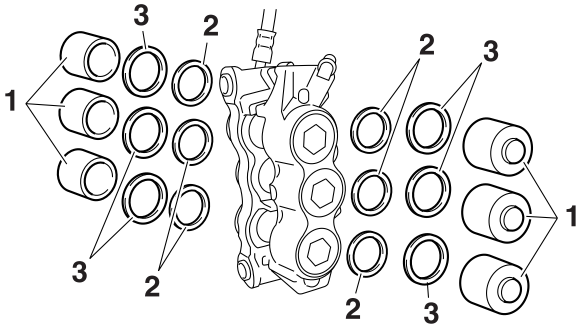

▼▼▼▼▼▼▼▼▼▼▼▼▼▼▼▼▼▼▼▼▼▼▼▼▼▼▼▼▼▼▼▼▼

a. Secure the right side brake caliper pistons with a piece of wood “a”.

b. Blow compressed air into the brake hose joint opening “b” to force out the left side pistons from the brake caliper.

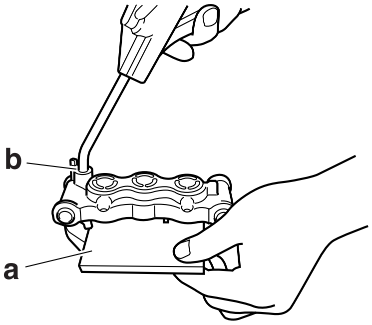

EWA14B1002

⚠ WARNING

- **Never try to pry out the brake caliper pistons.**
- **Do not loosen the bolts “3”.**

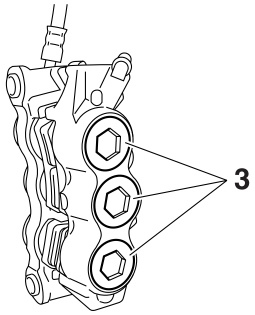

c. Remove the brake caliper piston dust seals and brake caliper piston seals.

d. Repeat the previous steps to force out the right side pistons from the brake caliper.

▲▲▲▲▲▲▲▲▲▲▲▲▲▲▲▲▲▲▲▲▲▲▲▲▲▲▲▲▲▲▲▲▲

EAS22390

CHECKING THE FRONT BRAKE CALIPERS

Recommended brake component replacement schedule	
Brake pads	If necessary
Piston dust seals and piston seals	Every two years
Brake hoses	Every four years
Brake fluid	Every two years and whenever the brake is disassembled

1. Check:
   - Brake caliper pistons “1”
     Rust/scratches/wear → Replace the brake caliper pistons.
   - Brake caliper cylinders “2”
     Scratches/wear → Replace the brake caliper assembly.

- Brake caliper body “3”
  Cracks/damage → Replace the brake caliper assembly.
- Brake fluid delivery passages (brake caliper body)
  Obstruction → Blow out with compressed air.

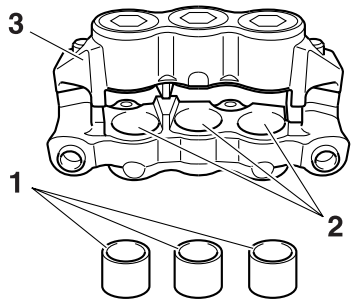

EWA14B1003

WARNING

Whenever a brake caliper is disassembled, replace the brake caliper piston dust seals and piston seals.

EAS22410

ASSEMBLING THE FRONT BRAKE CALIPERS

EWA14B1004

WARNING

- **Before installation, all internal brake components should be cleaned and lubricated with clean or new brake fluid.**
- **Never use solvents on internal brake components as they will cause the piston seals to swell and distort.**
- **Whenever a brake caliper is disassembled, replace the brake caliper piston dust seals and brake caliper piston seals.**

Recommended fluid
DOT 4

EAS22450

INSTALLING THE FRONT BRAKE CALIPERS

The following procedure applies to both of the brake calipers.

1. Install:
   - Brake pads
   - Brake pad springs
   - Brake pad pins
2. Install:
   - Brake caliper “1”
   - Copper washers New
   - Brake hose “2”
   - Union bolt “3”
   - Brake hose holder

Front brake caliper bolt
35 Nm (3.5 m·kgf, 25 ft·lbf)
LOCTITE®
Front brake hose union bolt
30 Nm (3.0 m·kgf, 22 ft·lbf)
Front brake hose holder
6 Nm (0.6 m·kgf, 4.3 ft·lbf)

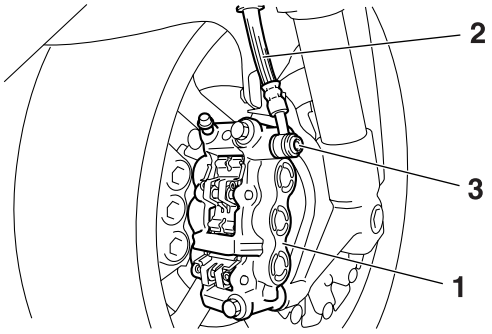

EWA13530

WARNING

Proper brake hose routing is essential to insure safe vehicle operation. Refer to “CABLE ROUTING” on page 2-49.

ECA14170

NOTICE

When installing the brake hose onto the brake caliper “1”, make sure the brake pipe “a” touches the projection “b” on the brake caliper.

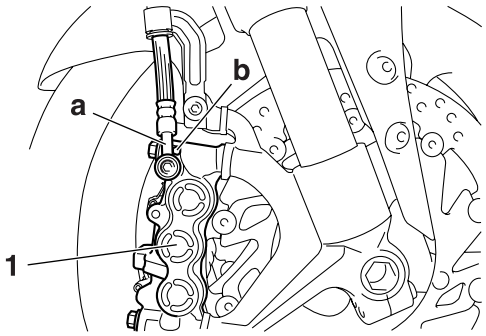

3. Fill:
   - Brake fluid reservoir
     (with the specified amount of the recommended brake fluid)

Recommended fluid
DOT 4

EWA13090

WARNING

- **Use only the designated brake fluid. Other brake fluids may cause the rubber seals to deteriorate, causing leakage and poor brake performance.**
- **Refill with the same type of brake fluid that is already in the system. Mixing brake fluids may result in a harmful chemical reaction, leading to poor brake performance.**
- **When refilling, be careful that water does not enter the brake fluid reservoir. Water will significantly lower the boiling point of the brake fluid and could cause vapor lock.**

ECA13540

NOTICE

Brake fluid may damage painted surfaces and plastic parts. Therefore, always clean up any spilt brake fluid immediately.

4. Bleed:
   - Brake system
     Refer to “BLEEDING THE HYDRAULIC BRAKE SYSTEM” on page 3-16.
5. Check:
   - Brake fluid level
     Below the minimum level mark “a” → Add the recommended brake fluid to the proper level.
     Refer to “CHECKING THE BRAKE FLUID LEVEL” on page 3-13.

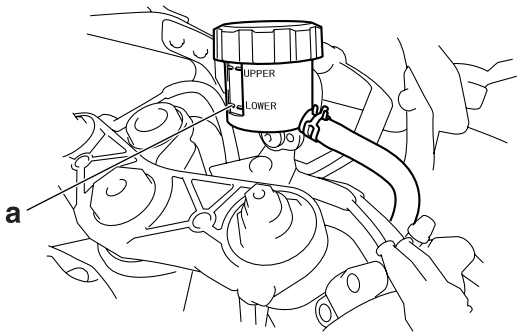

6. Check:
   - Brake lever operation
     Soft or spongy feeling → Bleed the brake system.
     Refer to “BLEEDING THE HYDRAULIC BRAKE SYSTEM” on page 3-16.

EAS22490

REMOVING THE FRONT BRAKE MASTER CYLINDER

TIP

Before removing the front brake master cylinder, drain the brake fluid from the entire brake system.

1. Disconnect:
   - Front brake light switch connectors “1” (from the brake switch)
2. Remove:
   - Union bolt “2”
   - Washers “3”
   - Brake hose “4”

TIP

To collect any remaining brake fluid, place a container under the master cylinder and the end of the brake hose.

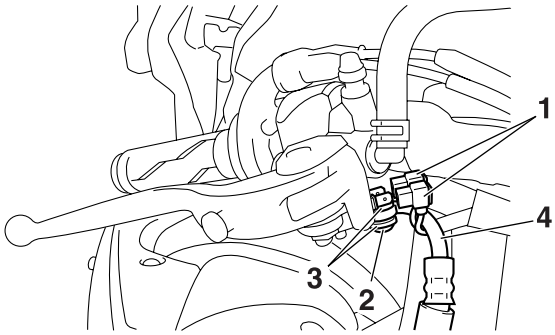

3. Remove:
   - Brake master cylinder holder
   - Brake master cylinder

EAS22510

CHECKING THE FRONT BRAKE MASTER CYLINDER

1. Check:
   - Brake master cylinder
     Damage/scratches/wear → Replace.
   - Brake fluid delivery passages (brake master cylinder body)
     Obstruction → Blow out with compressed air.

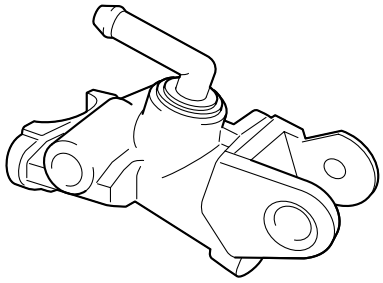

2. Check:
   - Brake fluid reservoir tank “1”
     Cracks/damage → Replace.
   - Brake fluid reservoir diaphragm “2”
     Damage/wear → Replace.
   - Brake fluid reservoir diaphragm holder “3”
     Cracks/damage → Replace.

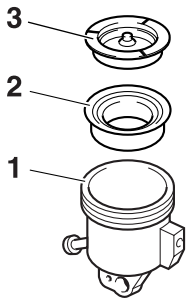

3. Check:
   - Brake hose “4”
     Cracks/damage/wear → Replace.

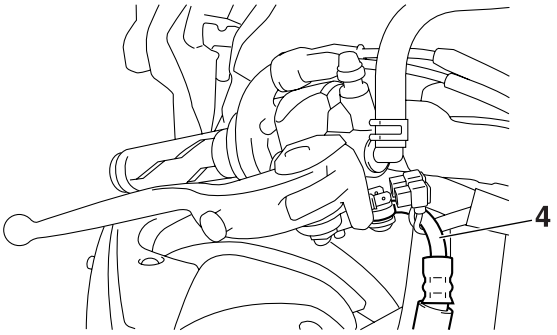

EAS22520
ASSEMBLING THE FRONT BRAKE MASTER CYLINDER

EWA13520
WARNING

- **Before installation, all internal brake components should be cleaned and lubricated with clean or new brake fluid.**
- **Never use solvents on internal brake components.**

Recommended fluid
DOT 4

1. Install:
   - Brake master cylinder kit New

EAS22540
INSTALLING THE FRONT BRAKE MASTER CYLINDER

1. Install:
   - Brake master cylinder “1”
   - Brake master cylinder holder “2”

Front brake master cylinder holder bolt
13 Nm (1.3 m·kgf, 9.4 ft·lbf)

TIP
- Install the brake master cylinder holder with the “UP” mark “a” facing up.
- First, tighten the upper bolt, then the lower bolt.

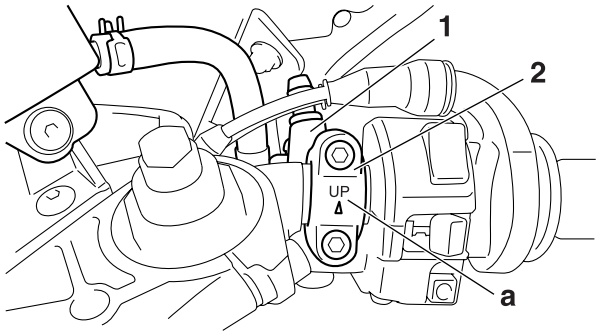

2. Install:
   - Washers New
   - Brake hose
   - Union bolt

Front brake hose union bolt
30 Nm (3.0 m·kgf, 22 ft·lbf)

EWA13530
WARNING

Proper brake hose routing is essential to insure safe vehicle operation. Refer to “CABLE ROUTING” on page 2-49.

TIP
- While holding the brake hose, tighten the union bolt as shown.
- Turn the handlebar to the left and right to make sure the brake hose does not touch other parts (e.g., wire harness, cables, leads). Correct if necessary.

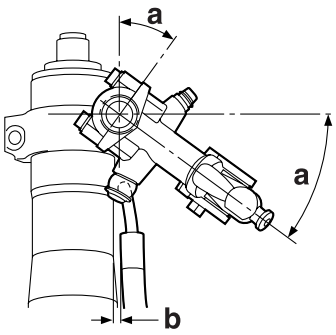

a. 36°
b. 3 mm (0.12 in)

3. Fill:
   - Brake fluid reservoir
     (with the specified amount of the recommended brake fluid)

	Recommended fluid **DOT 4**

EWA13090

WARNING

- **Use only the designated brake fluid. Other brake fluids may cause the rubber seals to deteriorate, causing leakage and poor brake performance.**
- **Refill with the same type of brake fluid that is already in the system. Mixing brake fluids may result in a harmful chemical reaction, leading to poor brake performance.**
- **When refilling, be careful that water does not enter the brake fluid reservoir. Water will significantly lower the boiling point of the brake fluid and could cause vapor lock.**

ECA13540

NOTICE

Brake fluid may damage painted surfaces and plastic parts. Therefore, always clean up any spilt brake fluid immediately.

4. Bleed:
   - Brake system
     Refer to “BLEEDING THE HYDRAULIC BRAKE SYSTEM” on page 3-16.
5. Check:
   - Brake fluid level
     Below the minimum level mark “a” → Add the recommended brake fluid to the proper level.
     Refer to “CHECKING THE BRAKE FLUID LEVEL” on page 3-13.

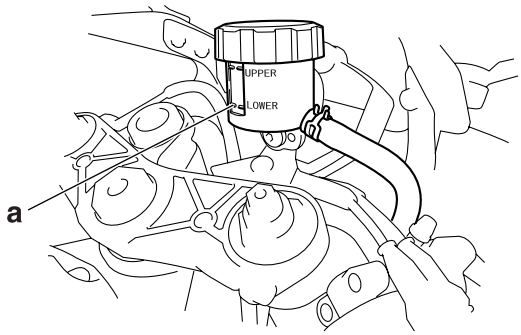

6. Check:
   - Brake lever operation
     Soft or spongy feeling → Bleed the brake system.
     Refer to “BLEEDING THE HYDRAULIC BRAKE SYSTEM” on page 3-16.

EAS22550

REAR BRAKE

Removing the rear brake pads

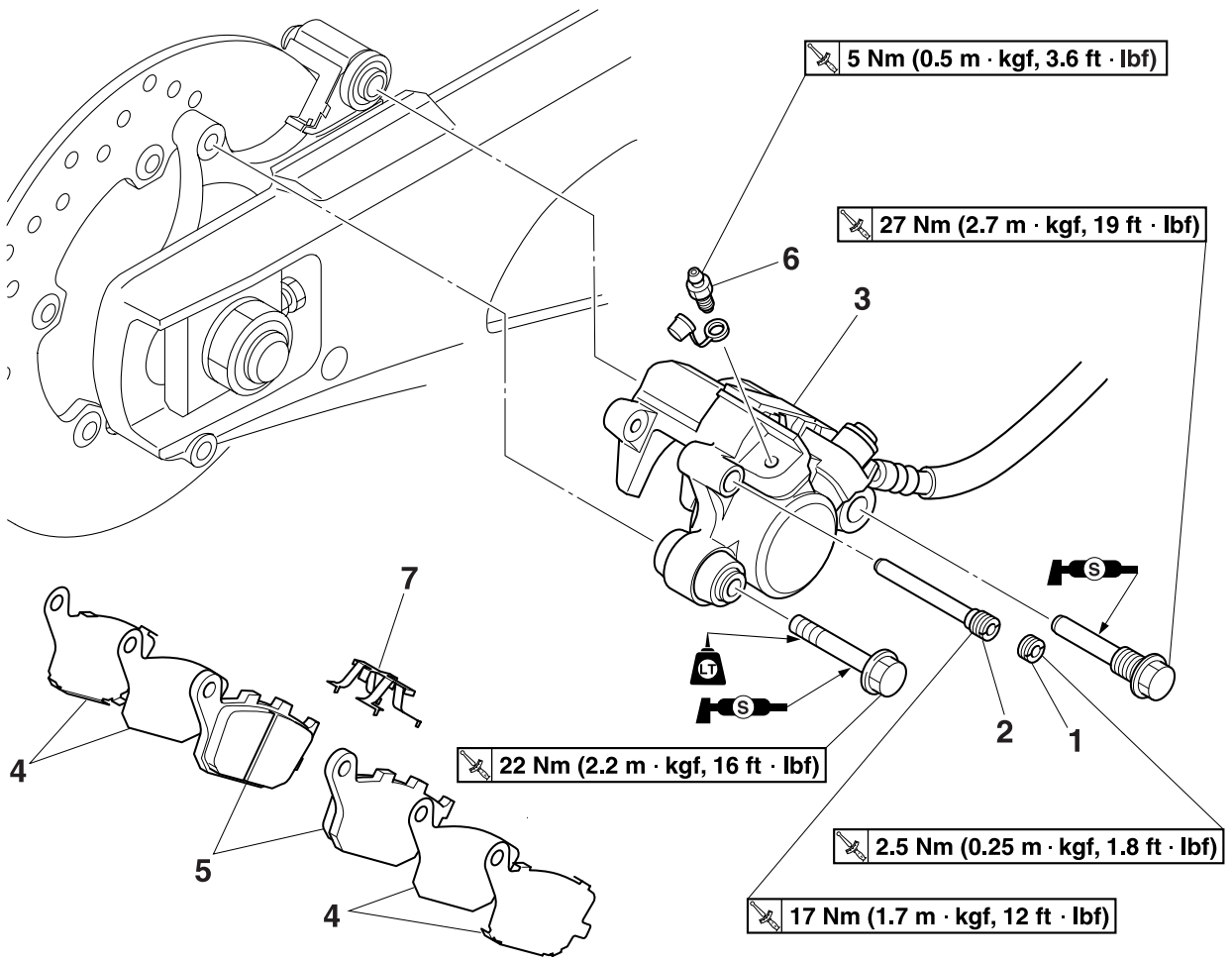

Order	Job/Parts to remove	Q'ty	Remarks
1	Screw plug	1	
2	Brake pad pin	1	
3	Rear brake caliper	1	
4	Brake pad shim	4	
5	Brake pad	2	
6	Bleed screw	1	
7	Brake pad spring	1	
			For installation, reverse the removal procedure.

Removing the rear brake master cylinder

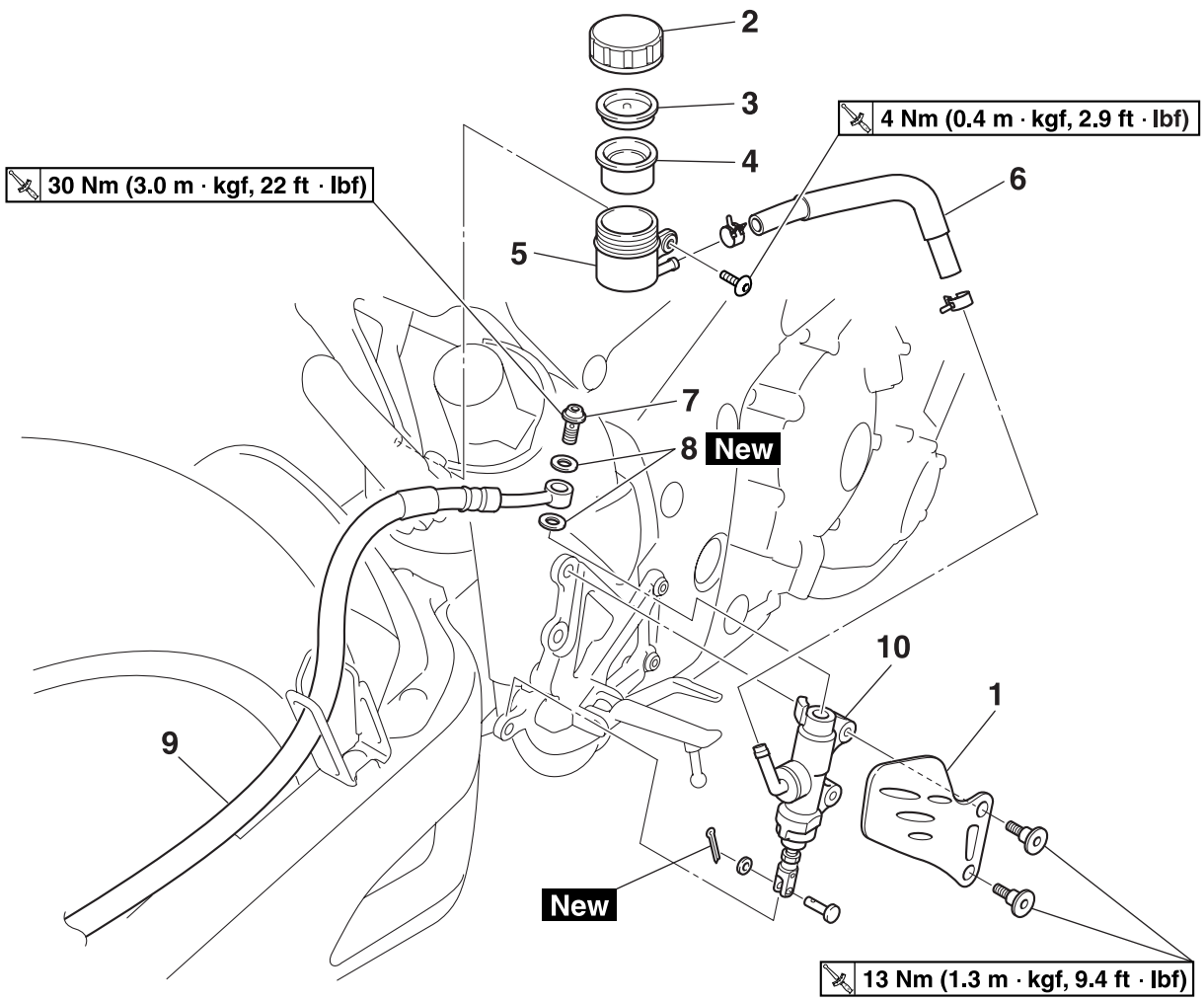

Order	Job/Parts to remove	Q'ty	Remarks
	Brake fluid		Drain. Refer to "BLEEDING THE HYDRAULIC BRAKE SYSTEM" on page 3-16.
1	Footrest plate	1	
2	Brake fluid reservoir cap	1	
3	Rear brake fluid reservoir diaphragm holder	1	
4	Rear brake fluid reservoir diaphragm	1	
5	Brake fluid reservoir tank	1	
6	Brake fluid reservoir hose	1	
7	Union bolt	1	
8	Washer	2	
9	Brake hose	1	
10	Brake master cylinder	1	
			For installation, reverse the removal procedure.

Disassembling the rear brake master cylinder

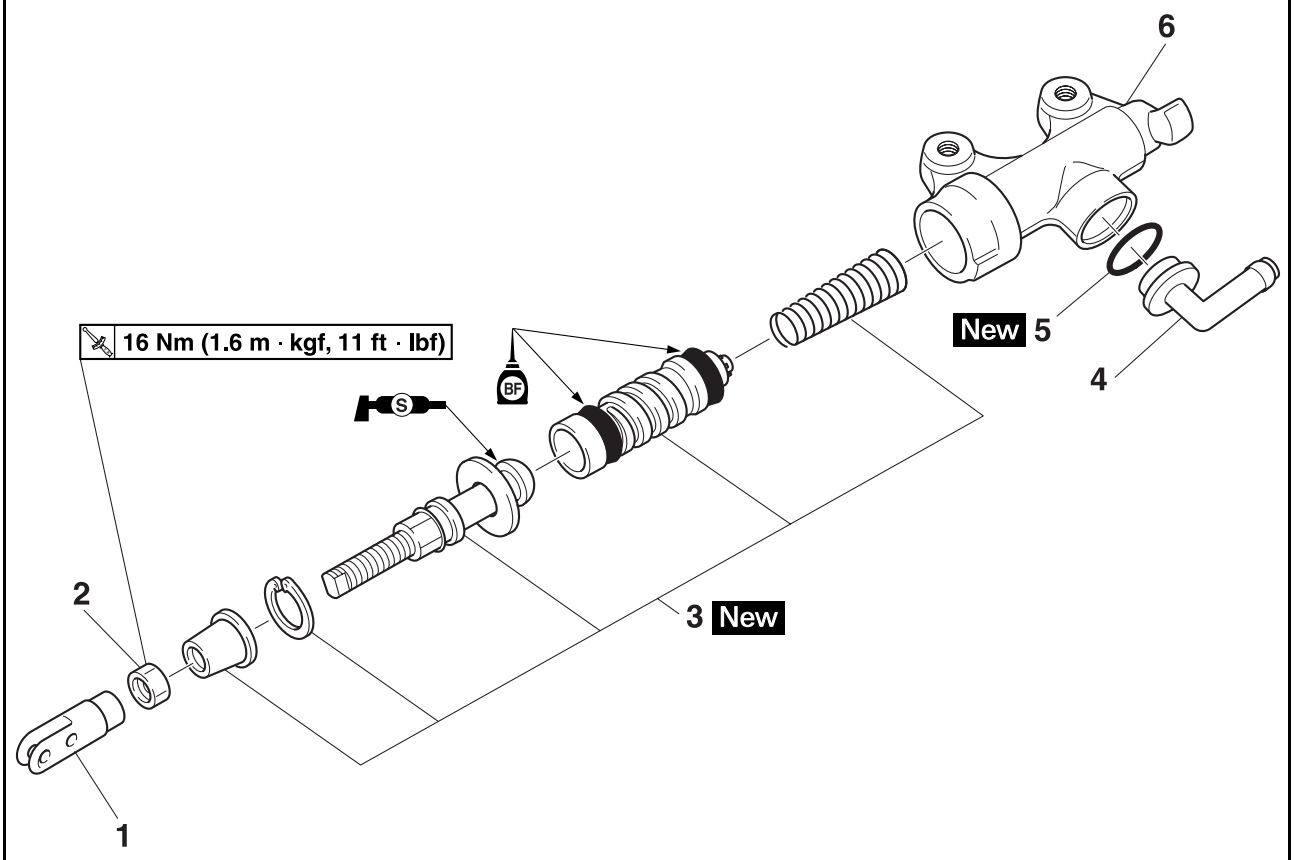

Order	Job/Parts to remove	Q'ty	Remarks
1	Brake master cylinder yoke	1	
2	Adjusting nut	1	
3	Brake master cylinder kit	1	
4	Hose joint	1	
5	O-ring	1	
6	Brake master cylinder body	1	
			For installation, reverse the removal procedure.

Removing the rear brake calipers

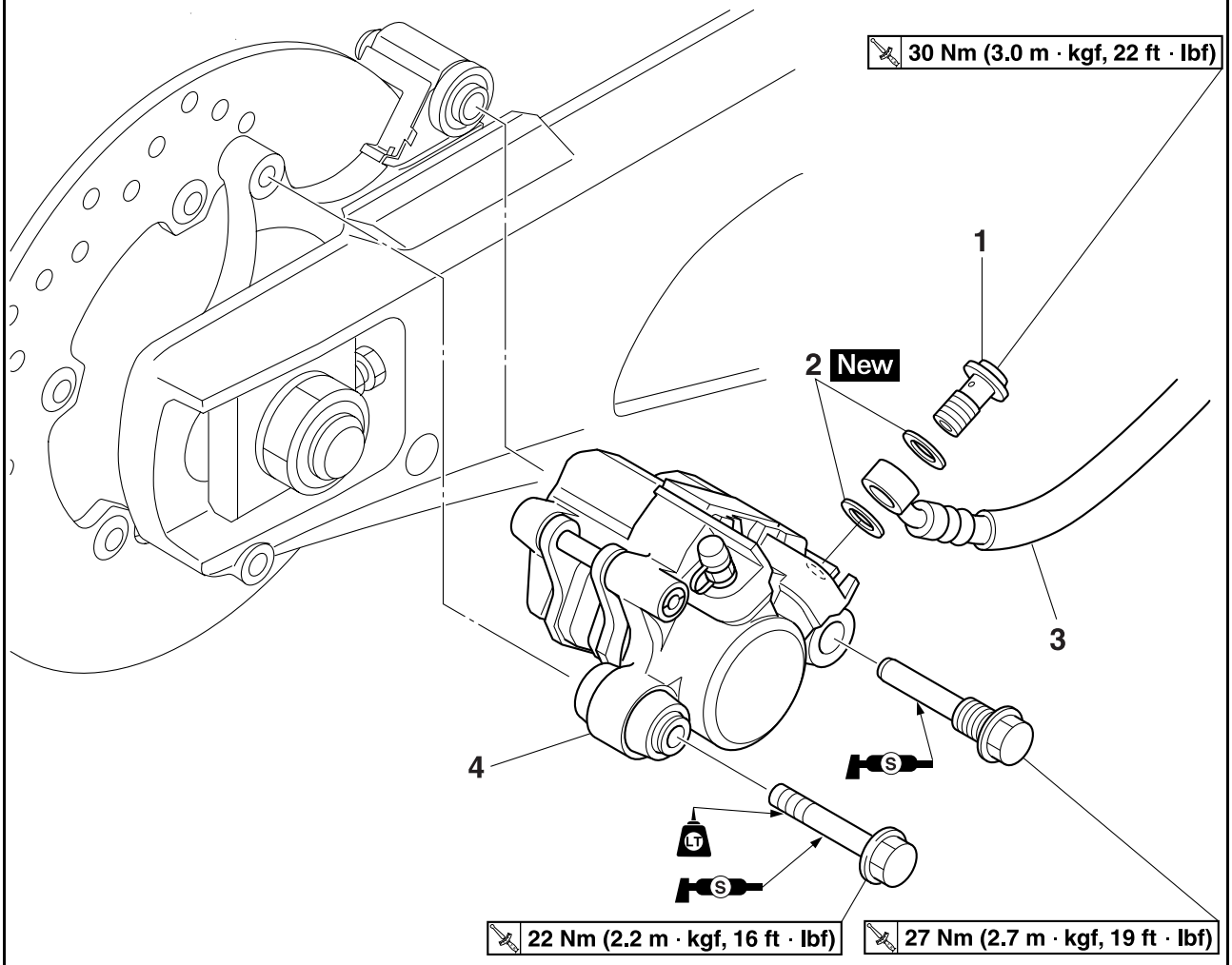

Order	Job/Parts to remove	Q'ty	Remarks
1	Union bolt	1	
2	Washer	2	
3	Brake hose	1	
4	Brake caliper	1	
			For installation, reverse the removal procedure.

Disassembling the rear brake caliper

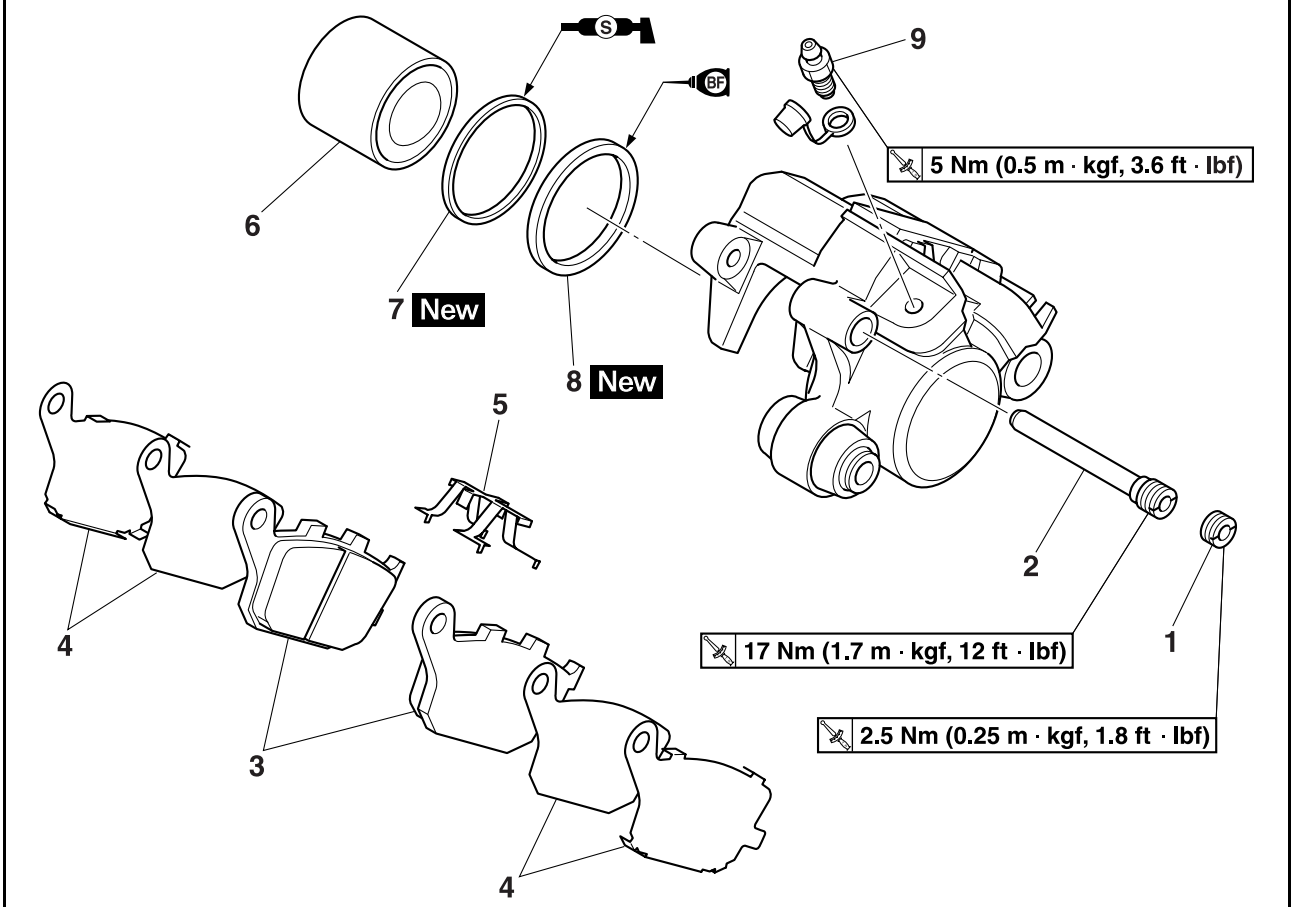

Order	Job/Parts to remove	Q'ty	Remarks
1	Screw plug	1	
2	Brake pad pin	1	
3	Brake pad	2	
4	Brake pad shim	4	
5	Brake pad spring	1	
6	Brake caliper piston	1	
7	Brake caliper piston dust seal	1	
8	Brake caliper piston seal	1	
9	Bleed screw	1	
			For installation, reverse the removal procedure.

EAS22560
INTRODUCTION
EWA14100
WARNING

Disc brake components rarely require disassembly. Therefore, always follow these preventive measures:
- **Never disassemble brake components unless absolutely necessary.**
- **If any connection on the hydraulic brake system is disconnected, the entire brake system must be disassembled, drained, cleaned, properly filled, and bled after reassembly.**
- **Never use solvents on internal brake components.**
- **Use only clean or new brake fluid for cleaning brake components.**
- **Brake fluid may damage painted surfaces and plastic parts. Therefore, always clean up any spilt brake fluid immediately.**
- **Avoid brake fluid coming into contact with the eyes as it can cause serious injury.**
- **FIRST AID FOR BRAKE FLUID ENTERING THE EYES:**
- **Flush with water for 15 minutes and get immediate medical attention.**

EAS22570
CHECKING THE REAR BRAKE DISC
1. Remove:
   - Rear wheel
     Refer to “REAR WHEEL” on page 4-24.
2. Check:
   - Brake disc
     Damage/galling → Replace.
3. Measure:
   - Brake disc deflection
     Out of specification → Correct the brake disc deflection or replace the brake disc.
     Refer to “CHECKING THE FRONT BRAKE DISCS” on page 4-35.

Brake disc deflection limit
0.15 mm (0.0059 in)

4. Measure:
   - Brake disc thickness
     Measure the brake disc thickness at a few different locations.
     Out of specification → Replace.
     Refer to “CHECKING THE FRONT BRAKE DISCS” on page 4-35.

Brake disc thickness limit
4.5 mm (0.18 in)

5. Adjust:
   - Brake disc deflection
     Refer to “CHECKING THE FRONT BRAKE DISCS” on page 4-35.

Rear brake disc bolt
30 Nm (3.0 m·kgf, 22 ft·lbf)
LOCTITE®

6. Install:
   - Rear wheel
     Refer to “REAR WHEEL” on page 4-24.

EAS22580
REPLACING THE REAR BRAKE PADS
TIP
When replacing the brake pads, it is not necessary to disconnect the brake hose or disassemble the brake caliper.

1. Remove:
   - Screw plug “1”
   - Brake pad pin “2”
   - Brake caliper “3”
   - Brake pad spring

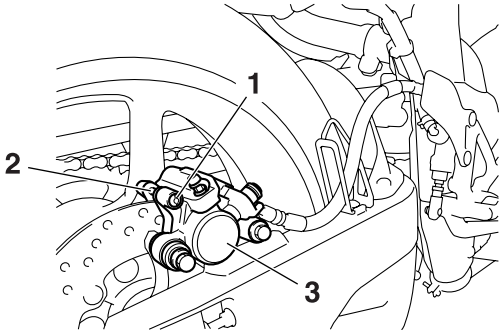

2. Remove:
   - Brake pads “1”
     (along with the brake pad shims “2”)

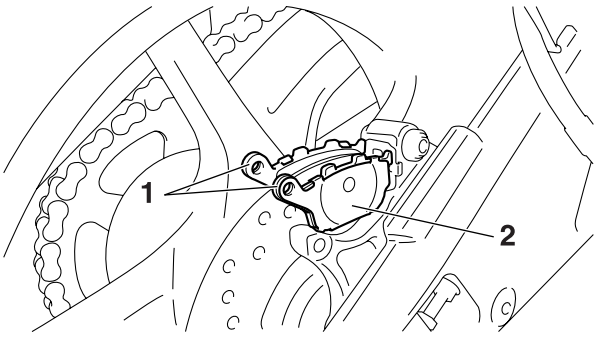

3. Measure:
   - Brake pad wear limit “a”
     Out of specification → Replace the brake pads as a set.

Brake pad lining thickness (inner)
6.0 mm (0.24 in)
Limit
1.0 mm (0.04 in)
Brake pad lining thickness (outer)
6.0 mm (0.24 in)
Limit
1.0 mm (0.04 in)

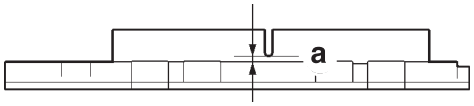

4. Install:
   - Brake pad shims
     (onto the brake pads)
   - Brake pads
   - Brake pad spring

TIP
Always install new brake pads, brake pad shims, and a brake pad spring as a set.

▼▼▼▼▼▼▼▼▼▼▼▼▼▼▼▼▼▼▼▼▼▼▼▼▼▼▼▼▼▼▼▼

a. Connect a clear plastic hose “1” tightly to the bleed screw “2”. Put the other end of the hose into an open container.

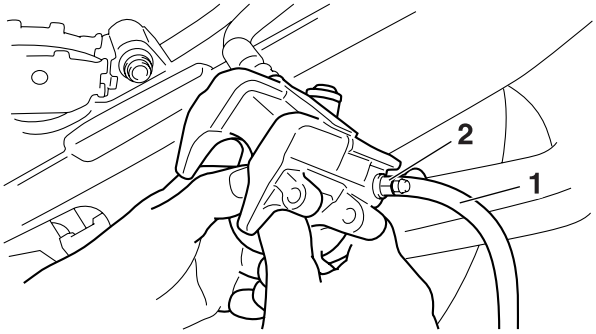

b. Loosen the bleed screw and push the brake caliper pistons into the brake caliper with your finger.

c. Tighten the bleed screw.

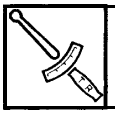

Bleed screw
5 Nm (0.5 m·kgf, 3.6 ft·lbf)

d. Install a new brake pad shim “3” onto each new brake pad “4”.

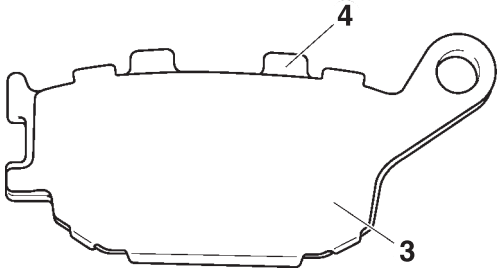

▲▲▲▲▲▲▲▲▲▲▲▲▲▲▲▲▲▲▲▲▲▲▲▲▲▲▲▲▲▲▲▲

5. Install:
   - Brake pad pin
   - Screw plug
   - Brake caliper

Rear brake caliper bolt (front side)
27 Nm (2.7 m·kgf, 19 ft·lbf)
Rear brake caliper bolt (rear side)
22 Nm (2.2 m·kgf, 16 ft·lbf)
LOCTITE®

6. Check:
   - Brake fluid level
     Below the minimum level mark “a” → Add the recommended brake fluid to the proper level.
     Refer to “CHECKING THE BRAKE FLUID LEVEL” on page 3-13.

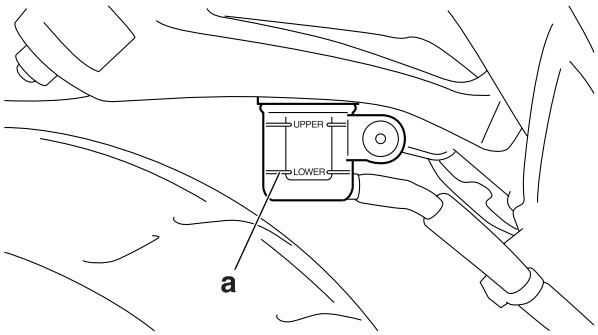

7. Check:
   - Brake pedal operation
     Soft or spongy feeling → Bleed the brake system.
     Refer to “BLEEDING THE HYDRAULIC BRAKE SYSTEM” on page 3-16.

EAS22590
REMOVING THE REAR BRAKE CALIPER

TIP
Before disassembling the brake caliper, drain the brake fluid from the entire brake system.

1. Remove:
   - Union bolt “1”
   - Copper washers “2”
   - Brake hose “3”
   - Brake caliper “4”

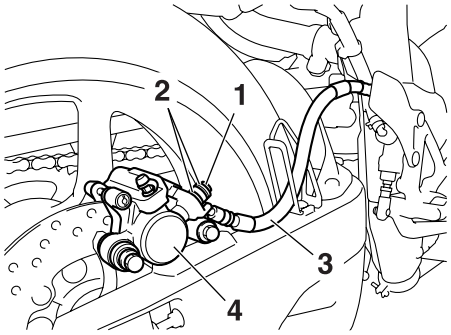

TIP
Put the end of the brake hose into a container and pump out the brake fluid carefully.

EAS22600
DISASSEMBLING THE REAR BRAKE CALIPER

1. Remove:
   - Brake caliper piston “1”
   - Brake caliper piston dust seal “2”
   - Brake caliper piston seal “3”

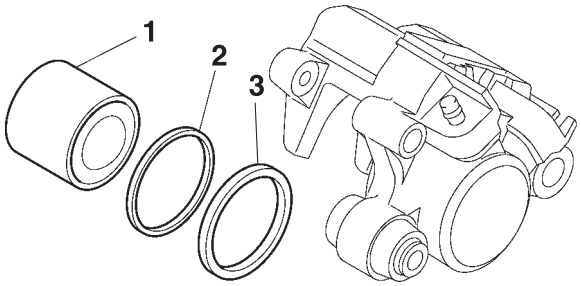

▼▼▼▼▼▼▼▼▼▼▼▼▼▼▼▼▼▼▼▼▼▼▼▼▼▼▼▼▼▼▼▼▼▼

a. Secure the brake caliper position with a piece of wood “a”.
b. Blow compressed air into the brake hose joint opening “b” to force out the piston from the brake caliper.

EWA13550
WARNING

- **Cover the brake caliper piston with a rag. Be careful not to get injured when the piston is expelled from the brake caliper.**
- **Never try to pry out the brake caliper piston.**

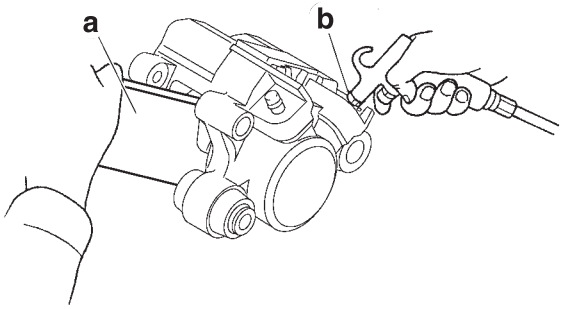

c. Remove the brake caliper piston dust seal and brake caliper piston seal.

▲▲▲▲▲▲▲▲▲▲▲▲▲▲▲▲▲▲▲▲▲▲▲▲▲▲▲▲▲▲▲▲▲▲

EAS22640
CHECKING THE REAR BRAKE CALIPER

Recommended brake component replacement schedule	
Brake pads	If necessary
Piston dust seal and piston seal	Every two years
Brake hoses	Every four years
Brake fluid	Every two years and whenever the brake is disassembled

1. Check:
   - Brake caliper piston “1”
     Rust/scratches/wear → Replace the brake caliper piston.
   - Brake caliper cylinder “2”
     Scratches/wear → Replace the brake caliper assembly.
   - Brake caliper body “3”
     Cracks/damage → Replace the brake caliper assembly.
   - Brake fluid delivery passages (brake caliper body)
     Obstruction → Blow out with compressed air.

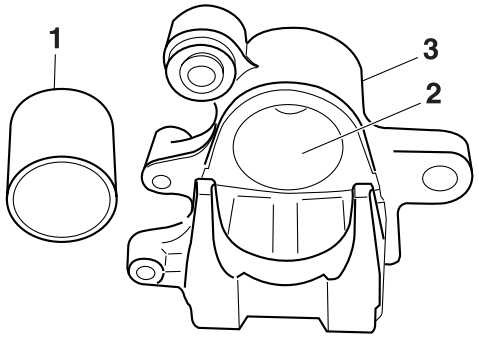

EWA14B1005

WARNING

Whenever a brake caliper is disassembled, replace the brake caliper piston dust seal and brake caliper piston seal.

2. Check:
   - Brake caliper bracket “1”
     Cracks/damage → Replace.

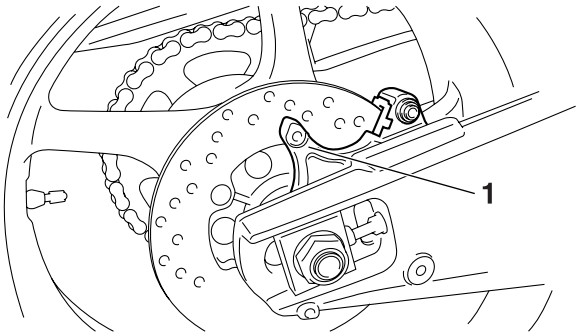

EAS22650

ASSEMBLING THE REAR BRAKE CALIPER

EWA14B1006

WARNING

- **Before installation, all internal brake components should be cleaned and lubricated with clean or new brake fluid.**
- **Never use solvents on internal brake components as they will cause the piston seals to swell and distort.**
- **Whenever a brake caliper is disassembled, replace the brake caliper piston dust seal and brake caliper piston seal.**

Recommended fluid
DOT 4

EAS22670

INSTALLING THE REAR BRAKE CALIPER

1. Install:
   - Brake caliper “1”
     (temporarily)
   - Washers New
   - Brake hose “2”
   - Union bolt “3”

Rear brake hose union bolt
30 Nm (3.0 m·kgf, 22 ft·lbf)

EWA13530

WARNING

Proper brake hose routing is essential to insure safe vehicle operation. Refer to “CABLE ROUTING” on page 2-49.

ECA14170

NOTICE

When installing the brake hose onto the brake caliper “1”, make sure the brake pipe “a” touches the projection “b” on the brake caliper.

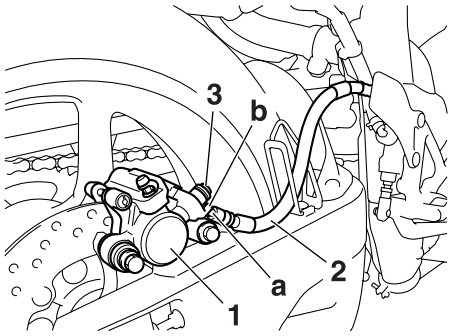

2. Remove:
   - Brake caliper
3. Install:
   - Brake pads
     (along with the brake pad shims)
   - Brake pad spring
   - Brake pad pin
   - Screw plug
   - Brake caliper

Rear brake caliper bolt (front side)
27 Nm (2.7 m·kgf, 19 ft·lbf)
Rear brake caliper bolt (rear side)
22 Nm (2.2 m·kgf, 16 ft·lbf)
LOCTITE®

4. Fill:
   - Brake fluid reservoir
     (with the specified amount of the recommended brake fluid)

Recommended fluid
DOT 4

EWA13090

WARNING

- **Use only the designated brake fluid. Other brake fluids may cause the rubber seals to deteriorate, causing leakage and poor brake performance.**
- **Refill with the same type of brake fluid that is already in the system. Mixing brake fluids may result in a harmful chemical reaction, leading to poor brake performance.**
- **When refilling, be careful that water does not enter the brake fluid reservoir. Water will significantly lower the boiling point of the brake fluid and could cause vapor lock.**

ECA13540

NOTICE

Brake fluid may damage painted surfaces and plastic parts. Therefore, always clean up any spilt brake fluid immediately.

5. Bleed:
   - Brake system
     Refer to “BLEEDING THE HYDRAULIC BRAKE SYSTEM” on page 3-16.
6. Check:
   - Brake fluid level
     Below the minimum level mark “a” → Add the recommended brake fluid to the proper level.
     Refer to “CHECKING THE BRAKE FLUID LEVEL” on page 3-13.

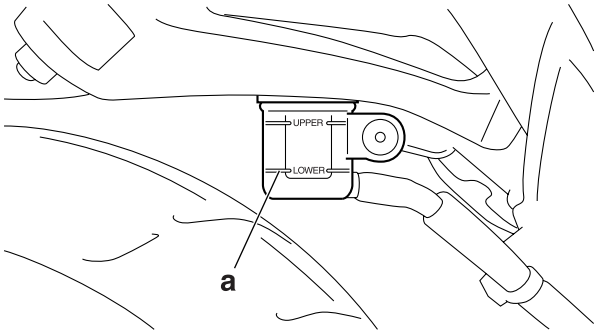

7. Check:
   - Brake pedal operation
     Soft or spongy feeling → Bleed the brake system.
     Refer to “BLEEDING THE HYDRAULIC BRAKE SYSTEM” on page 3-16.

EAS22700

REMOVING THE REAR BRAKE MASTER CYLINDER

1. Remove:
   - Union bolt “1”
   - Washers “2”
   - Brake hose “3”

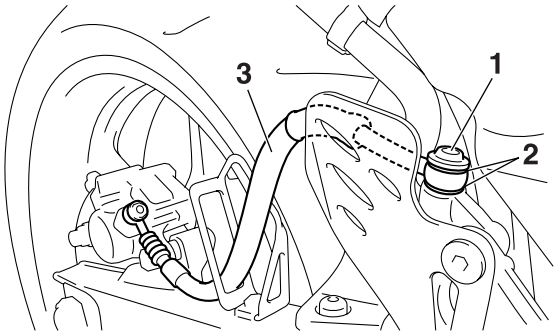

TIP

To collect any remaining brake fluid, place a container under the master cylinder and the end of the brake hose.

2. Remove:
   - Brake master cylinder

EAS22720

CHECKING THE REAR BRAKE MASTER CYLINDER

1. Check:
   - Brake master cylinder
     Damage/scratches/wear → Replace.
   - Brake fluid delivery passages (brake master cylinder body)
     Obstruction → Blow out with compressed air.

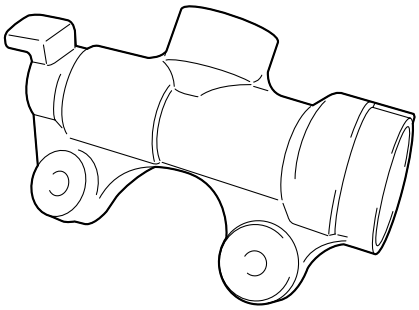

2. Check:
   - Brake fluid reservoir tank “1”
     Cracks/damage → Replace.
   - Brake fluid reservoir diaphragm “2”
     Cracks/damage → Replace.
   - Brake fluid reservoir diaphragm holder “3”
     Cracks/damage → Replace.

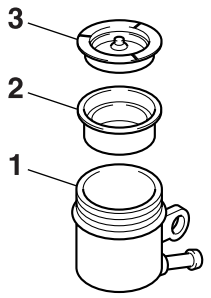

3. Check:
   - Brake hoses “1”
     Cracks/damage/wear → Replace.

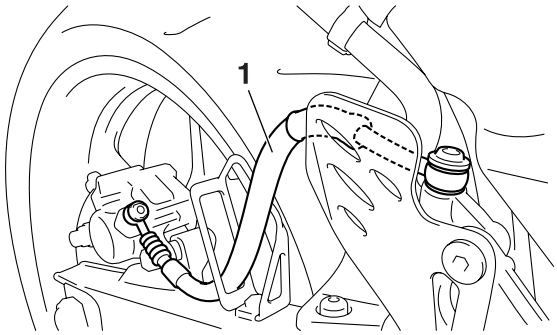

EAS22730
ASSEMBLING THE REAR BRAKE MASTER CYLINDER

EWA13520
WARNING

- **Before installation, all internal brake components should be cleaned and lubricated with clean or new brake fluid.**
- **Never use solvents on internal brake components.**

Recommended fluid
DOT 4

1. Install:
   - Brake master cylinder kit New

EAS22740
INSTALLING THE REAR BRAKE MASTER CYLINDER

1. Install:
   - Washers New
   - Brake hoses
   - Union bolt

Rear brake hose union bolt
30 Nm (3.0 m·kgf, 22 ft·lbf)

EWA13530
WARNING

Proper brake hose routing is essential to insure safe vehicle operation. Refer to “CABLE ROUTING” on page 2-49.

ECA14B1004
NOTICE

- **When installing the brake hose onto the brake master cylinder, make sure the brake pipe touches the projection “a” as shown.**
- **Face the brake hose paint mark “b” to the rear master cylinder and install so that the paint mark is facing up.**

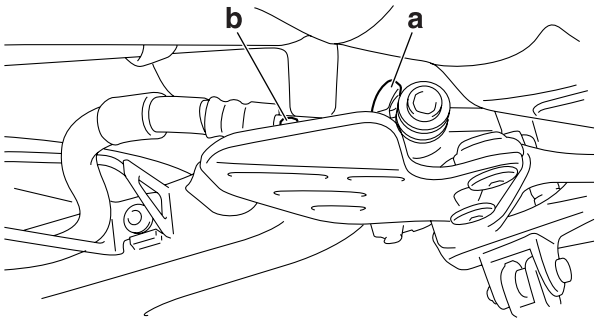

2. Fill:
   - Brake fluid reservoir
     (to the maximum level mark “c”)

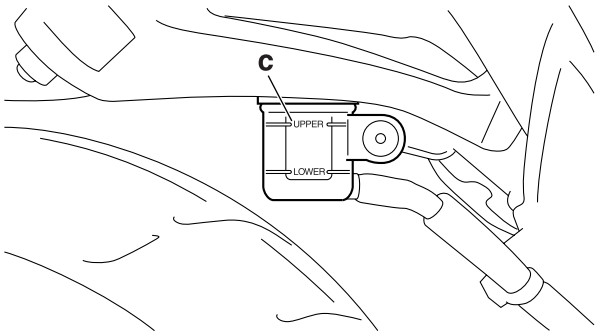

Recommended fluid
DOT 4

EWA13090
WARNING

- **Use only the designated brake fluid. Other brake fluids may cause the rubber seals to deteriorate, causing leakage and poor brake performance.**
- **Refill with the same type of brake fluid that is already in the system. Mixing brake fluids may result in a harmful chemical**

reaction, leading to poor brake performance.
- **When refilling, be careful that water does not enter the brake fluid reservoir. Water will significantly lower the boiling point of the brake fluid and could cause vapor lock.**

ECA13540

NOTICE

Brake fluid may damage painted surfaces and plastic parts. Therefore, always clean up any spilt brake fluid immediately.

3. Bleed:
   - Brake system
     Refer to “BLEEDING THE HYDRAULIC BRAKE SYSTEM” on page 3-16.
4. Check:
   - Brake fluid level
     Below the minimum level mark “a” → Add the recommended brake fluid to the proper level.
     Refer to “CHECKING THE BRAKE FLUID LEVEL” on page 3-13.

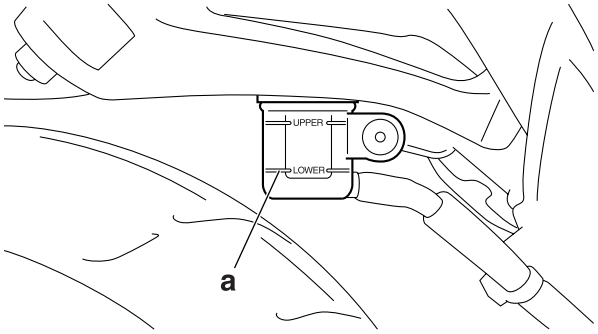

5. Adjust:
   - Brake pedal position
     Refer to “ADJUSTING THE REAR DISC BRAKE” on page 3-15.

Brake pedal position (from the top of the brake pedal to the center of the bolt mount on the rider footrest bracket)
12–21 mm (0.47–0.83 in)

6. Adjust:
   - Rear brake light operation timing
     Refer to “ADJUSTING THE REAR BRAKE LIGHT SWITCH” on page 3-32.

EAS22850
HANDLEBARS

Removing the handlebars

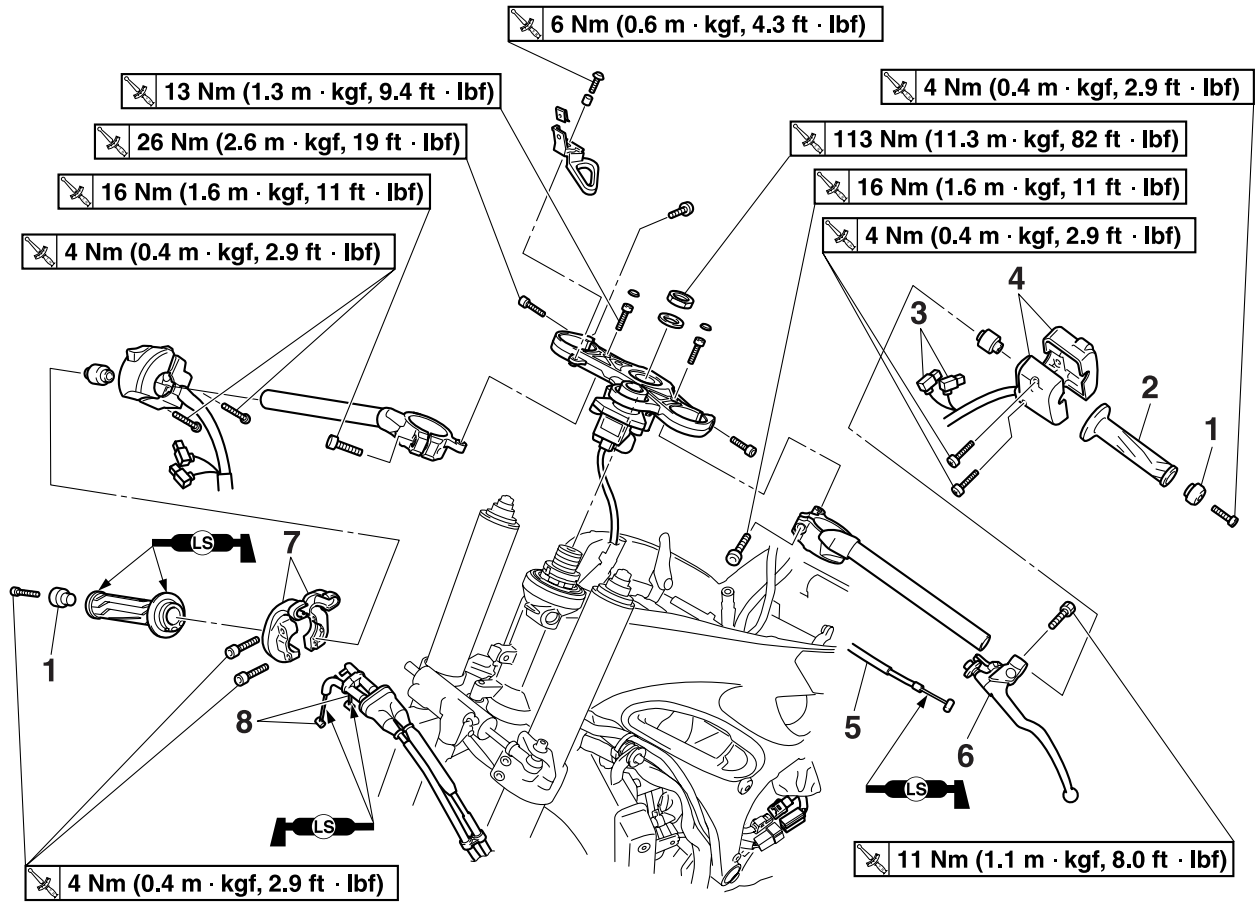

Order	Job/Parts to remove	Q'ty	Remarks
	Side cowling		Refer to "GENERAL CHASSIS" on page 4-1.
	ECU and rectifier/regulator		Refer to "GENERAL CHASSIS" on page 4-1.
	Air duct		Refer to "GENERAL CHASSIS" on page 4-1.
	Front cowling		Refer to "GENERAL CHASSIS" on page 4-1.
	Front brake master cylinder		Refer to "FRONT BRAKE" on page 4-30.
1	Grip end	2	
2	Handlebar grip	1	
3	Clutch switch connector	2	Disconnect.
4	Left handlebar switch	1	
5	Clutch cable	1	
6	Clutch lever assembly	1	
7	Throttle cable housing	1	
8	Throttle cable	2	

Removing the handlebars

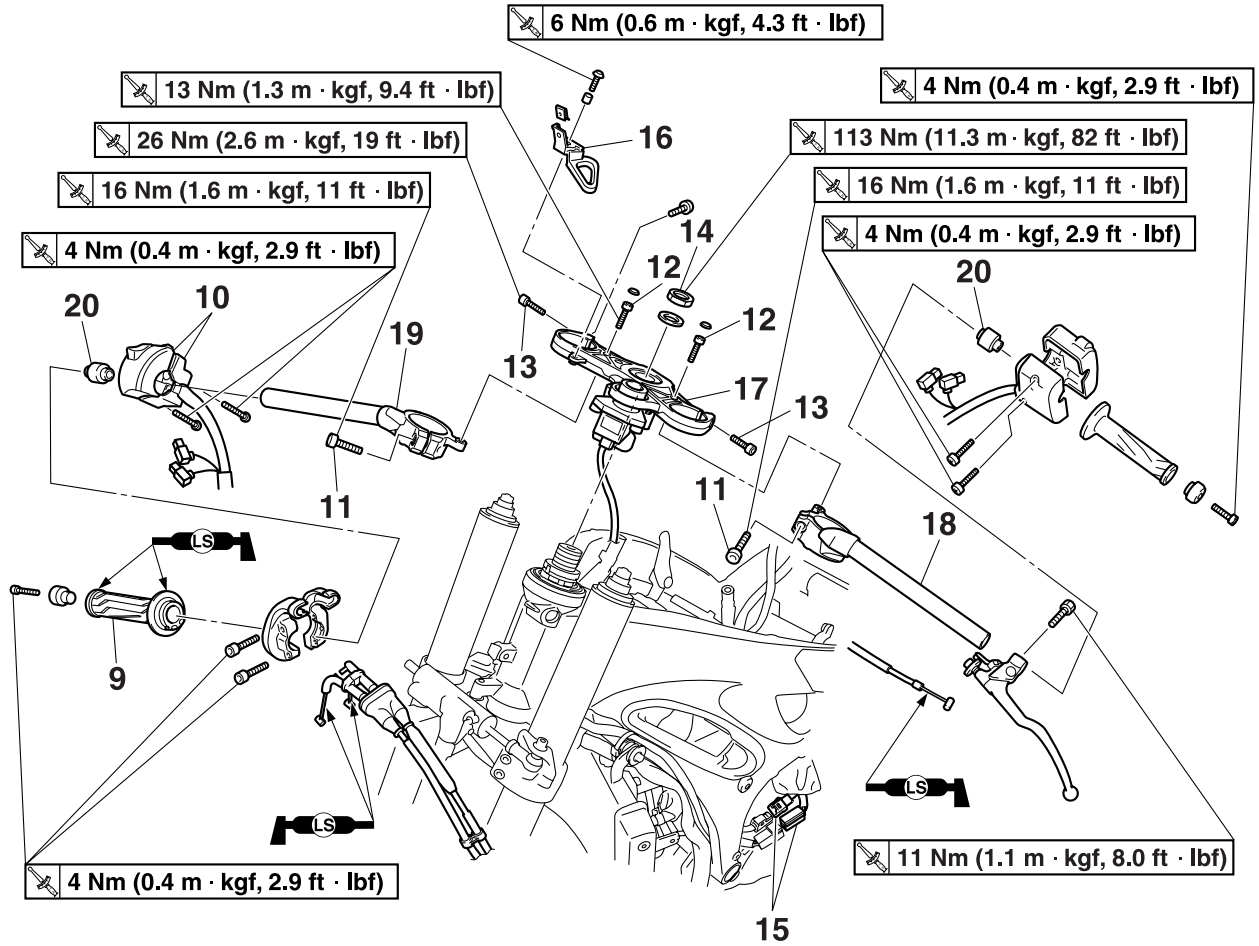

Order	Job/Parts to remove	Q'ty	Remarks
9	Throttle grip	1	
10	Right handlebar switch	1	
11	Handlebar pinch bolt	2	Loosen.
12	Handlebar bolt	2	Loosen.
13	Upper bracket pinch bolt	2	Loosen.
14	Steering stem nut	1	
15	Main switch coupler	2	Disconnect.
16	Clutch cable guide	1	
17	Upper bracket	1	
18	Left handlebar	1	
19	Right handlebar	1	
20	Grip end damper	2	
			For installation, reverse the removal procedure.

EAS22870
REMOVING THE HANDLEBAR
1. Stand the vehicle on a level surface.

EWA13120
WARNING
Securely support the vehicle so that there is no danger of it falling over.

2. Remove:
   - Grip end
   - Handlebar grip “1”

TIP
Blow compressed air between the handlebar and the handlebar grip, and gradually push the grip off the handlebar.

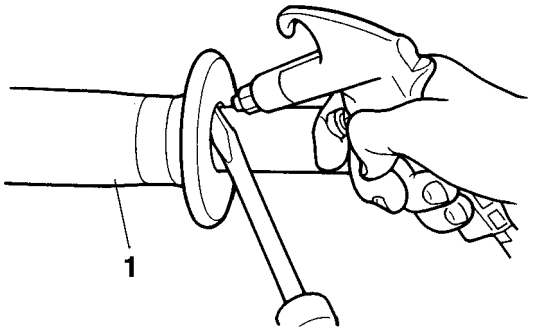

3. Remove:
   - Throttle cable housing “1”
   - Throttle grip “2”

TIP
While removing the throttle cable housing, pull back the rubber cover “3”.

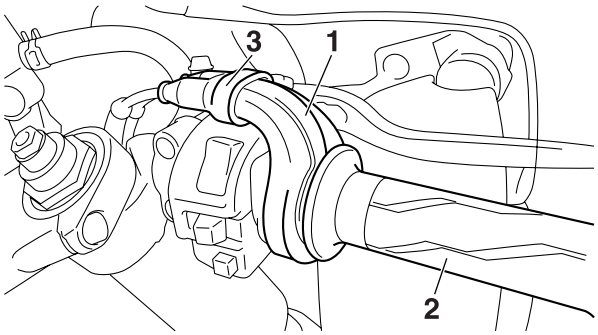

EAS22890
CHECKING THE HANDLEBARS
1. Check:
   - Left handlebar “1”
   - Right handlebar “2”
     Bends/cracks/damage → Replace.

EWA13690
WARNING
Do not attempt to straighten a bent handlebar as this may dangerously weaken it.

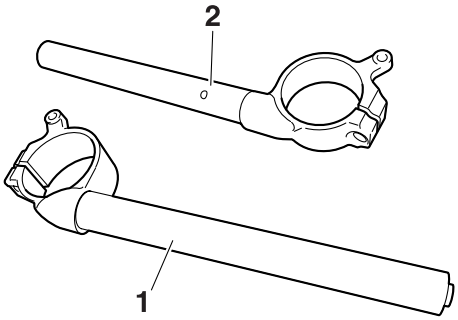

EWA13700
WARNING
Do not touch the handlebar grip until the rubber adhesive has fully dried.

EAS22900
INSTALLING THE HANDLEBARS
1. Stand the vehicle on a level surface.

EWA13120
WARNING
Securely support the vehicle so that there is no danger of it falling over.

2. Install:
   - Right handlebar switch “1”

TIP
Align the projection “a” on the right handlebar switch with the hole “b” on the right handlebar.

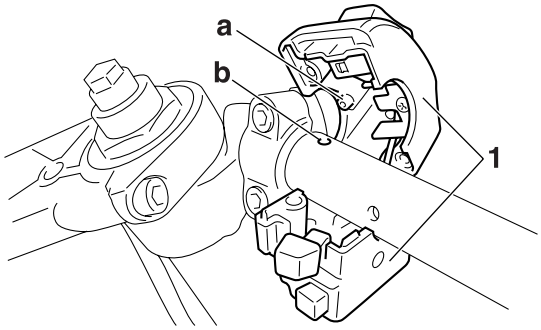

3. Install:
   - Brake master cylinder holder “1”

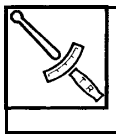

Front brake master cylinder holder bolt
13 Nm (1.3 m·kgf, 9.4 ft·lbf)

ECA14260

NOTICE

- **Install the brake master cylinder holder with the "UP" mark facing up.**
- **First, tighten the upper bolt, and then the lower bolt.**

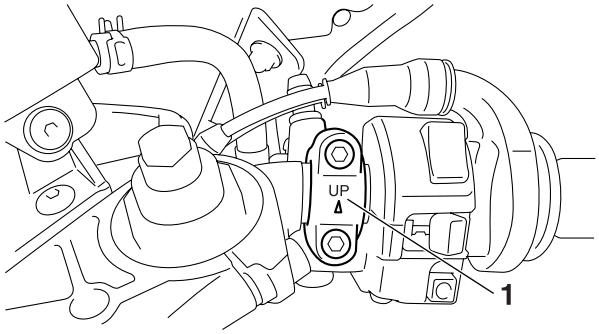

4. Install:
   - Throttle grip
   - Throttle cable housing "1"
   - Throttle cables

TIP

Align the projection "a" on the throttle cable housing with the hole "b" in the right handlebar.

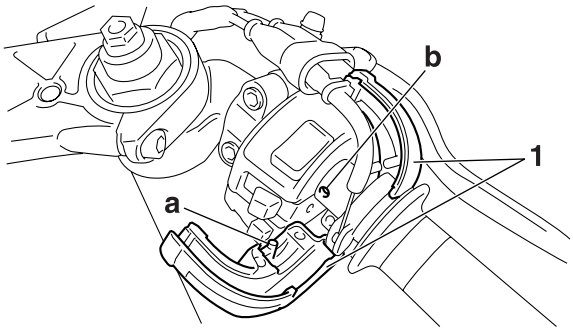

5. Install:
   - Clutch lever holder "1"

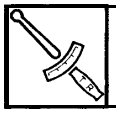	**Clutch lever holder bolt** **11 Nm (1.1 m·kgf, 8.0 ft·lbf)**

TIP

Align the slit on the clutch lever holder with the punch mark "a" on the left handlebar.

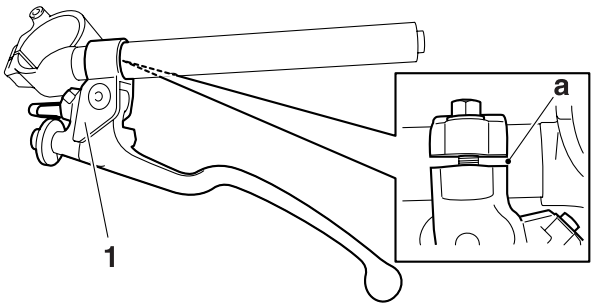

6. Install:
   - Left handlebar switch "1"

TIP

- Align the projection "a" on the left handlebar switch with the hole "b" on the left handlebar.
- There should be 2.0–2.5 mm (0.08–0.10 in) of clearance between left handlebar switch and clutch lever holder.

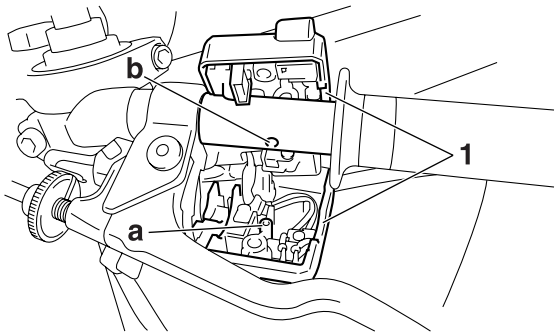

7. Install:
   - Handlebar grip
   - Grip end

▼▼▼▼▼▼▼▼▼▼▼▼▼▼▼▼▼▼▼▼▼▼▼▼▼▼▼▼▼▼▼▼

a. Apply a thin coat of rubber adhesive onto the end of the left handlebar.
b. Slide the handlebar grip over the end of the left handlebar.
c. Wipe off any excess rubber adhesive with a clean rag.

EWA14B1007

WARNING

Do not touch the handlebar grip until the rubber adhesive has fully dried.

TIP

When installing the handlebar grip, keep the clearance of 1.0–3.0 mm (0.04–0.12 in) between the handlebar grip and grip end.

▲▲▲▲▲▲▲▲▲▲▲▲▲▲▲▲▲▲▲▲▲▲▲▲▲▲▲▲▲▲▲▲

8. Adjust:
   - Clutch cable free play
     Refer to "ADJUSTING THE CLUTCH CABLE FREE PLAY" on page 3-13.

	Clutch lever free play **10.0–15.0 mm (0.39–0.59 in)**

9. Adjust:
   - Throttle cable free play
     Refer to “ADJUSTING THE THROTTLE CABLE FREE PLAY” on page 3-32.

	Throttle cable free play **3.0–5.0 mm (0.12–0.20 in)**

EAS22950

FRONT FORK

Removing the front fork legs

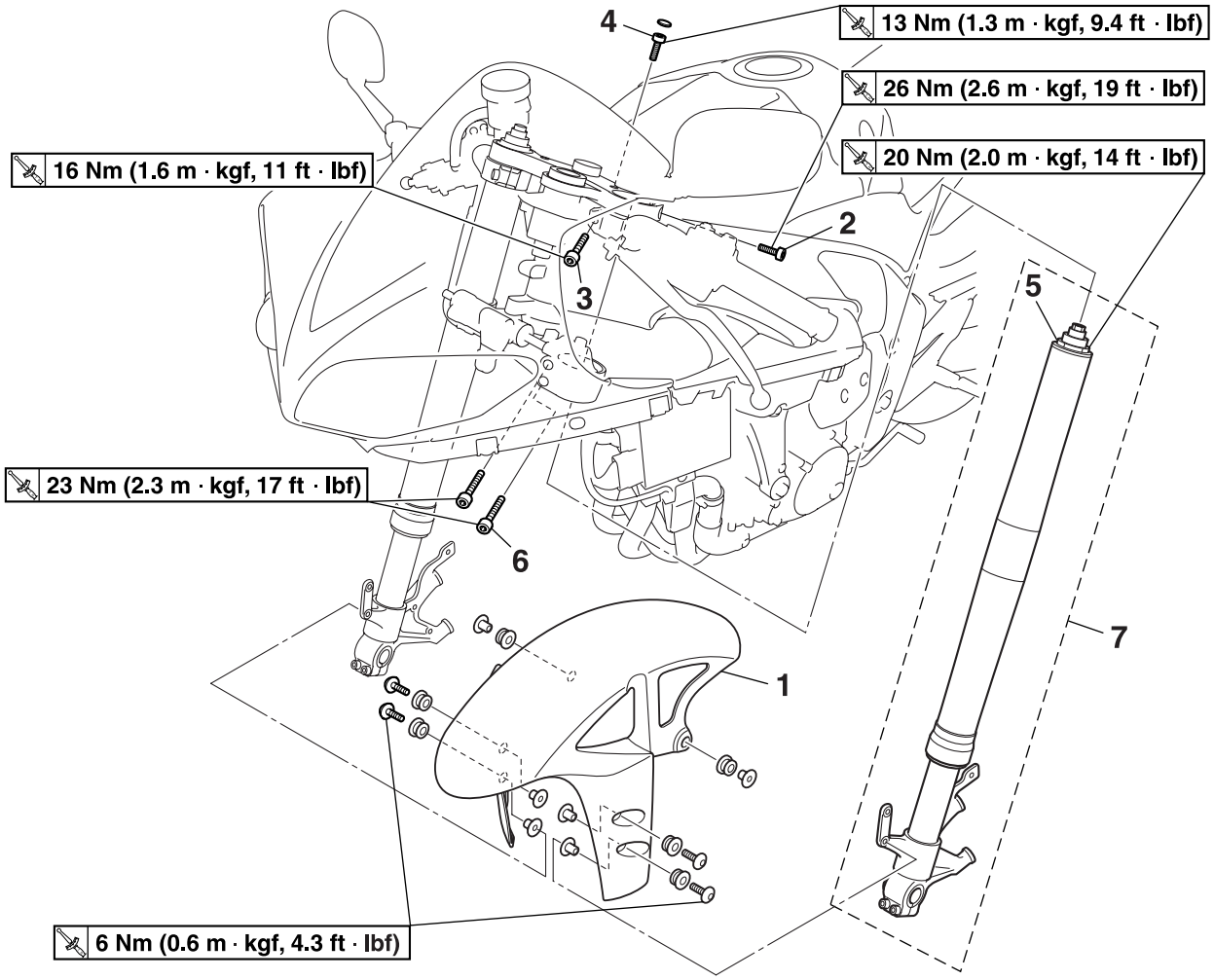

Order	Job/Parts to remove	Q'ty	Remarks
			The following procedure applies both of the front fork legs.
	Side cowling		Refer to "GENERAL CHASSIS" on page 4-1.
	Front wheel		Refer to "FRONT WHEEL" on page 4-18.
1	Front fender	1	
2	Upper bracket pinch bolt	1	Loosen.
3	Handlebar pinch bolt	1	Loosen.
4	Handlebar bolt	1	Loosen.
5	Cap bolt	1	Loosen.
6	Lower bracket pinch bolt	2	Loosen.
7	Front fork leg	1	
			For installation, reverse the removal procedure.

Disassembling the front fork legs

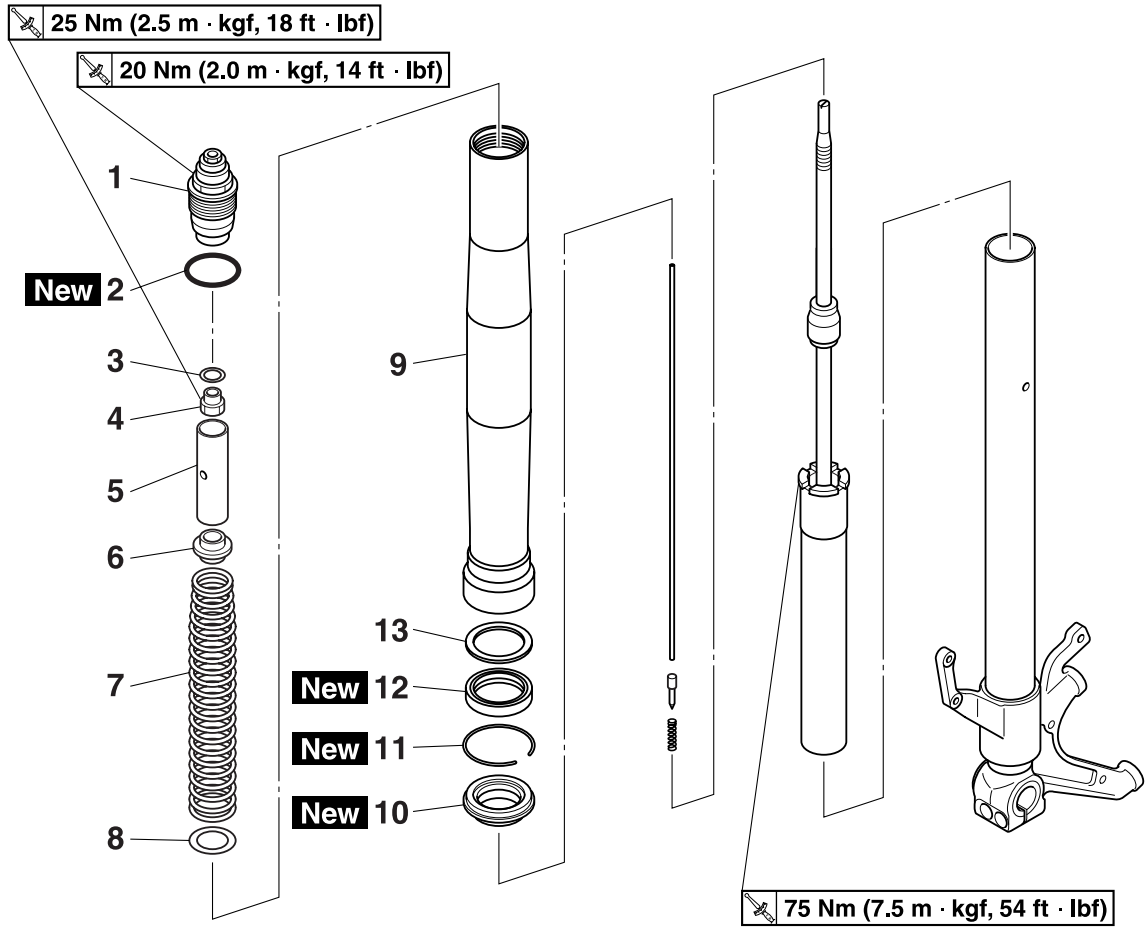

Order	Job/Parts to remove	Q'ty	Remarks
			The following procedure applies to both of the front fork legs.
1	Cap bolt	1	
2	O-ring	1	
3	Washer	1	
4	Nut	1	
5	Spacer	1	
6	Upper spring seat	1	
7	Fork spring	1	
8	Lower spring seat	1	
9	Outer tube	1	
10	Dust seal	1	
11	Oil seal clip	1	
12	Oil seal	1	
13	Washer	1	

Disassembling the front fork legs

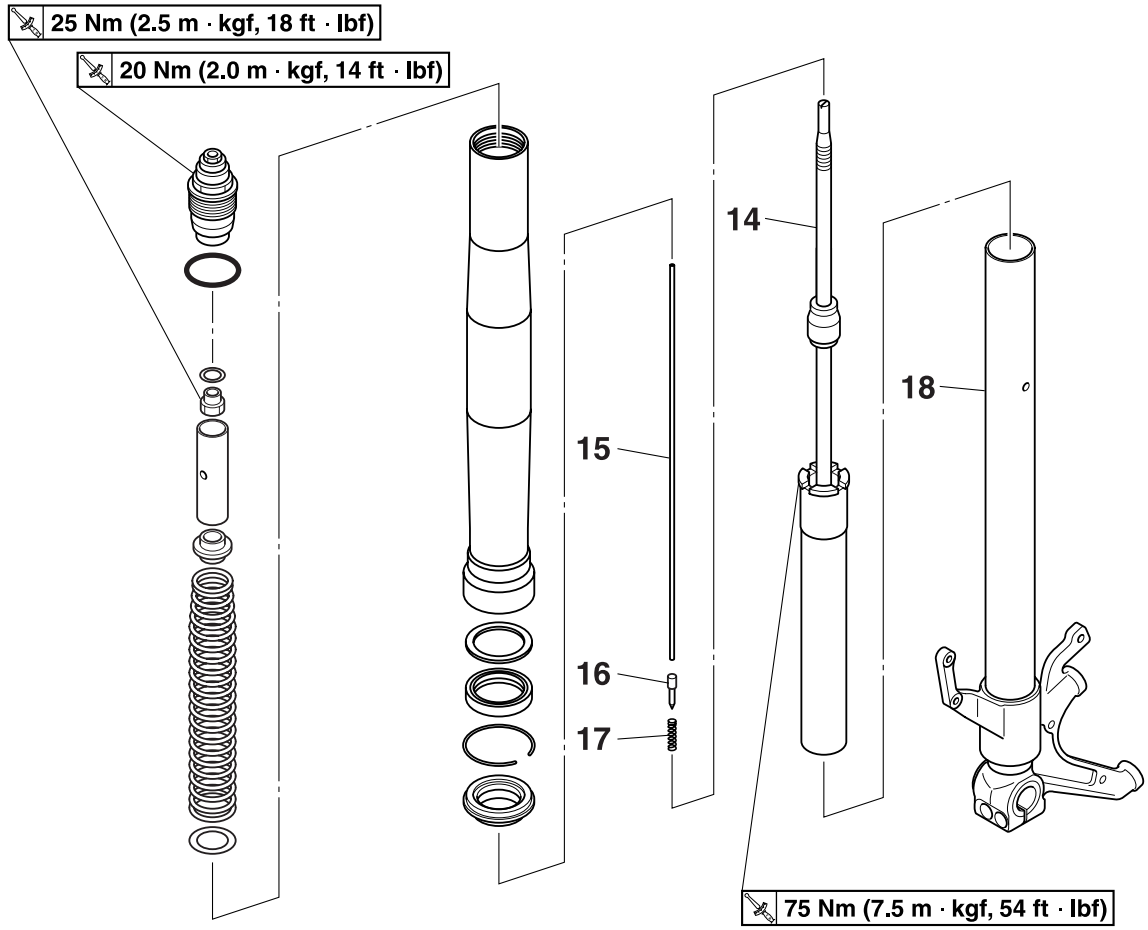

Order	Job/Parts to remove	Q'ty	Remarks
14	Damper rod assembly	1	
15	Damper adjusting rod	1	
16	Damper adjusting valve	1	
17	Damper adjusting valve spring	1	
18	Inner tube	1	
			For installation, reverse the removal procedure.

EAS14B1006
REMOVING THE FRONT FORK LEGS

The following procedure applies to both of the front fork legs.

1. Stand the vehicle on a level surface.

EWA14B1008

WARNING

Securely support the vehicle so that there is no danger of it falling over.

TIP

Place the vehicle on a suitable stand so that the front wheel is elevated.

2. Remove:
   - Front brake caliper
     Refer to “FRONT BRAKE” on page 4-30.
   - Front wheel
     Refer to “FRONT WHEEL” on page 4-18.
   - Side cowlings
     Refer to “GENERAL CHASSIS” on page 4-1.
3. Loosen:
   - Handlebar pinch bolt “1”
   - Upper bracket pinch bolts “2”
   - Handlebar bolt “3”
   - Cap bolt “4”
   - Lower bracket pinch bolts “5”

EWA14B1009

WARNING

Before loosening the upper and lower bracket pinch bolts, support the front fork leg.

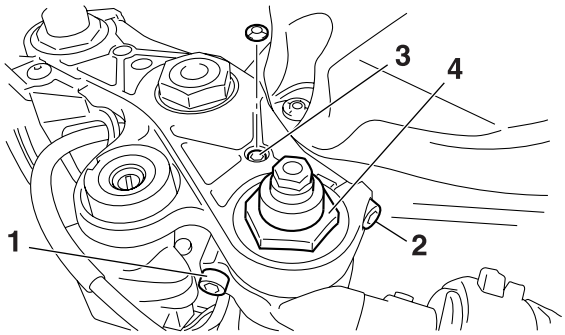

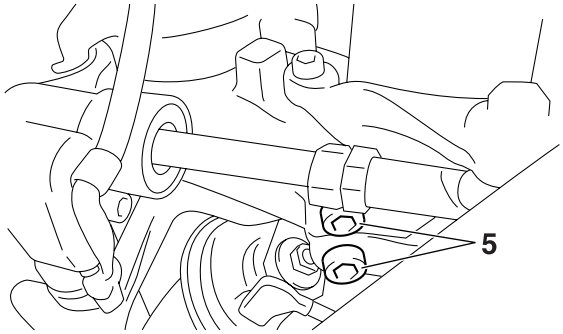

4. Remove:
   - Front fork leg

EAS14B1007
DISASSEMBLING THE FRONT FORK LEGS

The following procedure applies to both of the front fork legs.

1. Position the cap bolt collar “1” as shown in the illustration by turning the spring preload adjusting bolt “2” counterclockwise until it stops.

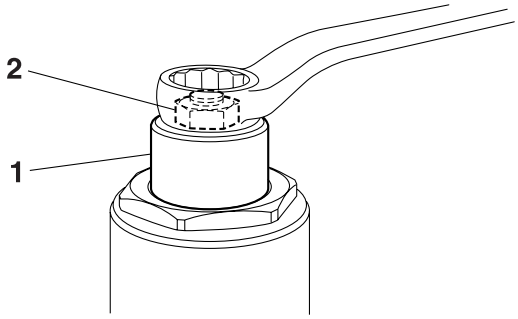

2. Remove:
   - Cap bolt “1”
     (from the damper adjusting rod)
   - Spacer “2”
   - Nut “3”

▼▼▼▼▼▼▼▼▼▼▼▼▼▼▼▼▼▼▼▼▼▼▼▼▼▼▼▼▼▼▼▼▼▼

a. Press down on the spacer with the fork spring compressor “4”.
b. Install the rod holder “5” between the nut “3” and the spacer “2”.

Fork spring compressor
90890-01441
YM-01441
Rod holder
90890-01434
Damper rod holder double ended
YM-01434

TIP
Use the side of the rod holder that is marked "B".

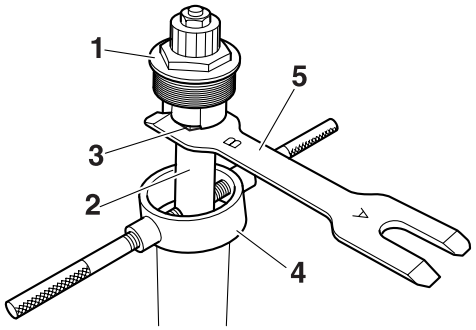

c. Hold the spring preload adjusting bolt "6" and loosen the nut "3".

ECA14B1005

NOTICE

When loosening the nut "3", be sure not to break the projections "a" on the cap bolt collar "7" of the cap bolt "1".

TIP
Loosen the nut using a proper tool that has a thickness "b" of 4.0 mm (0.16 in) or less.

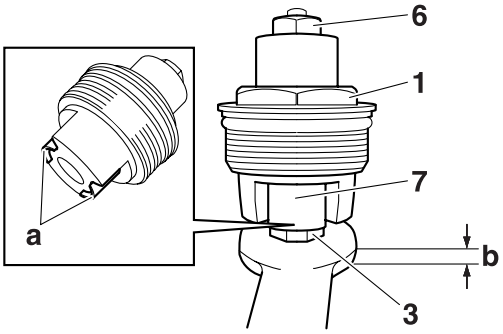

d. Remove the cap bolt.
e. Remove the rod holder and fork spring compressor.
f. Remove the nut and spacer.

▲▲▲▲▲▲▲▲▲▲▲▲▲▲▲▲▲▲▲▲▲▲▲▲▲▲▲▲▲▲▲▲

3. Drain:
   - Fork oil

TIP
Stroke the damper rod "1" several times while draining the fork oil.

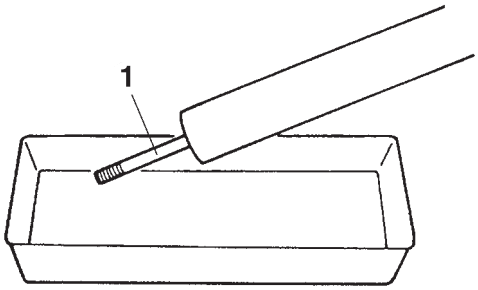

4. Remove:
   - Dust seal
   - Oil seal clip "1" (with a flat-head screwdriver)
   - Oil seal
   - Washer

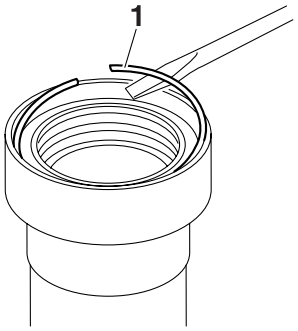

5. Remove:
   - Damper rod assembly

TIP
Remove the damper rod assembly with the damper rod holder "1".

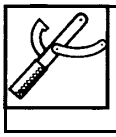

Damper rod holder
90890-01506
YM-01506

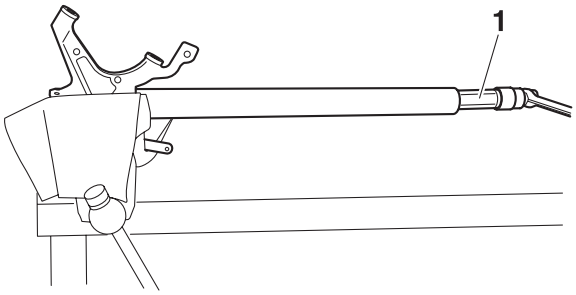

EAS23010

CHECKING THE FRONT FORK LEGS

The following procedure applies to both of the front fork legs.

1. Check:
   - Inner tube "1"
   - Outer tube "2"
     Bends/damage/scratches → Replace.

EWA13650

WARNING

Do not attempt to straighten a bent inner tube as this may dangerously weaken it.

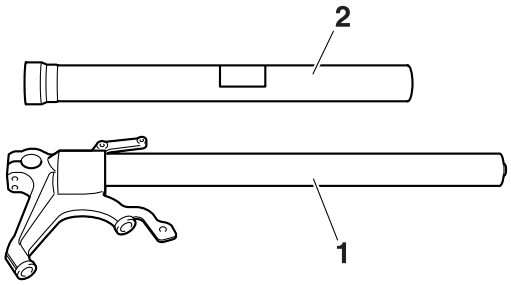

2. Measure:
   - Spring free length “a”
     Out of specification → Replace.

Fork spring free length
271.5 mm (10.69 in)
Limit
266.1 mm (10.48 in)

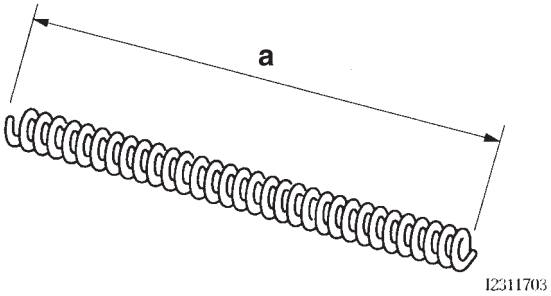

3. Check:
   - Damper rod “1”
     Damage/wear → Replace.
     Obstruction → Blow out all of the oil passages with compressed air.

ECA14200

NOTICE

- **The front fork leg has a built-in damper adjusting rod and a very sophisticated internal construction, which are particularly sensitive to foreign material.**
- **When disassembling and assembling the front fork leg, do not allow any foreign material to enter the front fork.**

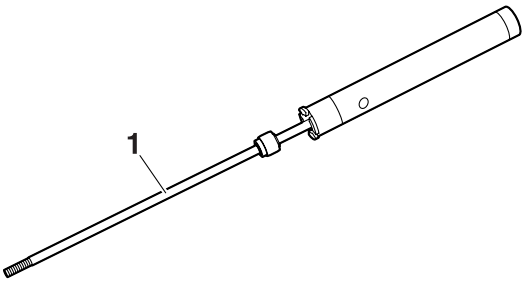

4. Check:
   - Cap bolt O-ring “1”
     Damage/wear → Replace.
   - Cap bolt collar projections “2”
     Cracks/damage → Replace.

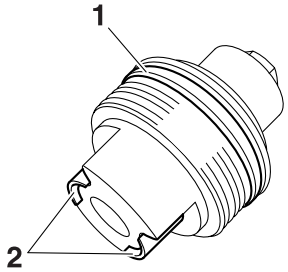

EAS14B1008

ASSEMBLING THE FRONT FORK LEGS

The following procedure applies to both of the front fork legs.

EWA14B1010

WARNING

- **Make sure the oil levels in both front fork legs are equal.**
- **Uneven oil levels can result in poor handling and a loss of stability.**

TIP

- When assembling the front fork leg, be sure to replace the following parts:
  - Oil seal
  - Dust seal
  - O-ring
- Before assembling the front fork leg, make sure all of the components are clean.

1. Install:
   - Damper rod assembly “1”
   - Inner tube “2”

ECA14B1006

NOTICE

Allow the damper rod assembly to slide slowly down the inner tube “2” until it protrudes from the bottom of the inner tube. Be careful not to damage the inner tube.

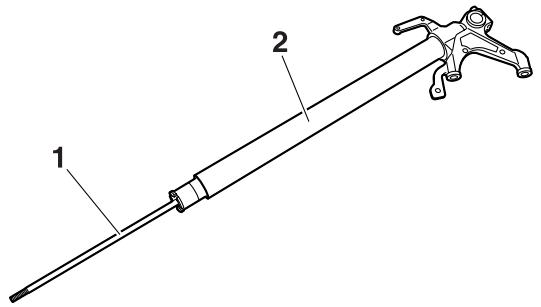

2. Lubricate:
   - Inner tube's outer surface

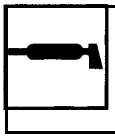

Recommended oil
Suspension oil M1 or equivalent

3. Tighten:
   - Damper rod assembly

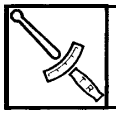

Damper rod assembly
75 Nm (7.5 m·kgf, 54 ft·lbf)

TIP

Tighten the damper rod assembly with the damper rod holder "1".

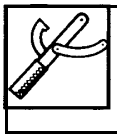

Damper rod holder
90890-01506
YM-01506

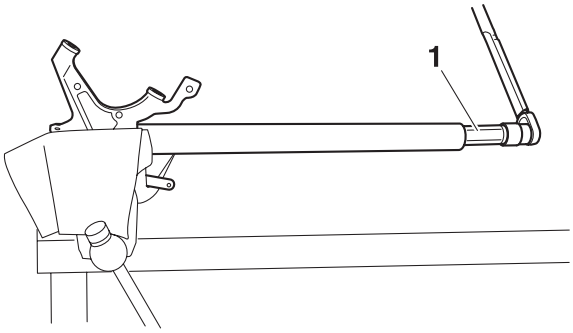

4. Install:
   - Dust seal "1" New
   - Oil seal clip "2" New
   - Oil seal "3" New
   - Washer "4"

ECA14B1007

NOTICE

Make sure the numbered side of the oil seal faces bottom side.

TIP

- Before installing the oil seal, lubricate its lips with lithium-soap-based grease.
- Lubricate the outer surface of the inner tube with fork oil.
- Before installing the oil seal, cover the top of the front fork leg with a plastic bag to protect the oil seal during installation.

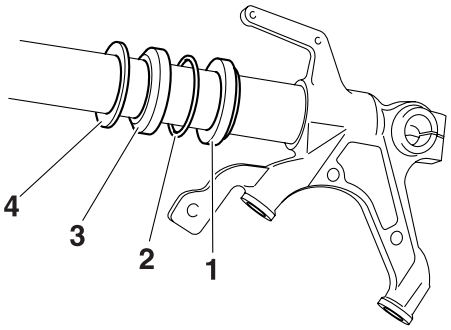

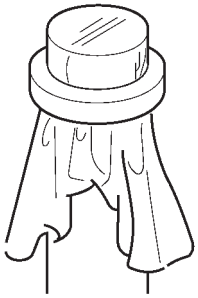

5. Install:
   - Outer tube
     (to the inner tube)
6. Install:
   - Washer
   - Oil seal "1"
     (with the fork seal driver "2")

Fork seal driver
90890-01442
Adjustable fork seal driver (36–46 mm)
YM-01442

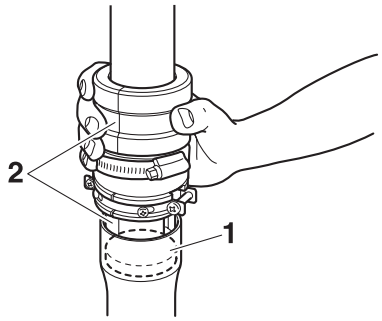

7. Install:
   - Oil seal clip “1”

TIP

Adjust the oil seal clip so that it fits into the outer tube’s groove.

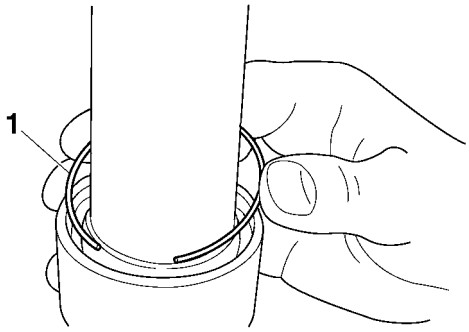

8. Install:
   - Dust seal “1”
     (with the fork seal driver weight “2”)

Fork seal driver
90890-01442
Adjustable fork seal driver (36–46 mm)
YM-01442

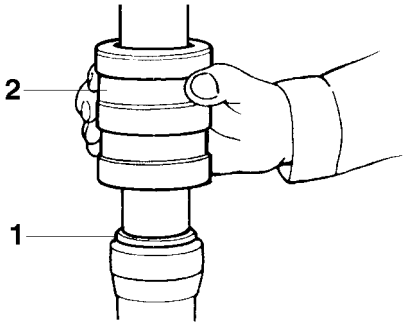

9. Install:
   - Rod puller “1”
   - Rod puller attachment “2”
     (onto the damper rod “3”)

Rod puller
90890-01437
Universal damping rod bleeding tool set
YM-A8703
Rod puller attachment (M10)
90890-01436
Universal damping rod bleeding tool set
YM-A8703

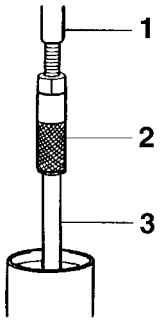

10. Fully compress the front fork leg.
11. Fill:
    - Front fork leg
      (with the specified amount of the recommended fork oil)

Quantity
528.0 cm³ (17.85 US oz, 18.62 Imp.oz)
Recommended oil
Suspension oil M1

ECA14B1008

NOTICE

- **Be sure to use the recommended fork oil. Other oils may have an adverse effect on front fork performance.**
- **When disassembling and assembling the front fork leg, do not allow any foreign material to enter the front fork.**

12. After filling the front fork leg, slowly stroke the damper rod “1” up and down (at least ten times) to distribute the fork oil.

TIP

Be sure to stroke the damper rod slowly because the fork oil may spurt out.

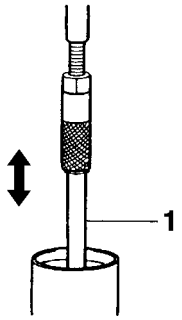

13. Before measuring the fork oil level, wait ten minutes until the oil has settled and the air bubbles have dispersed.

TIP

Be sure to bleed the front fork leg of any residual air.

14. Measure:
    - Front fork leg oil level “a”
      (from the top of the outer tube, with the outer tube fully compressed and without the fork spring)
      Out of specification → Correct.

	Level **117.0 mm (4.61 in)**

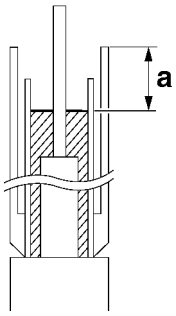

15. Install:
    - Lower spring seat “1”
    - Fork spring “2”
    - Upper spring seat “3”
    - Spacer “4”
    - Nut “5”
    - Damper adjusting valve spring “6”
    - Damper adjusting valve “7”
    - Damper adjusting rod “8”
    - Washer “9”
    - Cap bolt “10”
      (with O-ring)

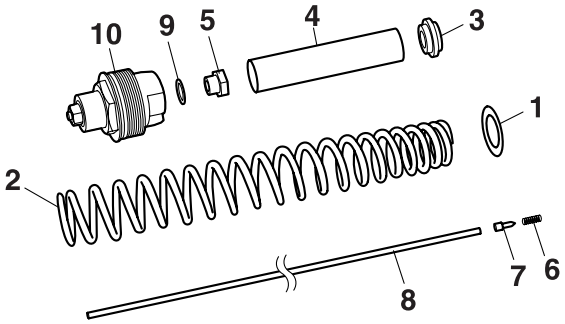

▼▼▼▼▼▼▼▼▼▼▼▼▼▼▼▼▼▼▼▼▼▼▼▼▼▼▼▼▼▼▼▼▼▼

a. Remove the rod puller attachment.
b. Install the under spring seat.
c. Install the fork spring.

TIP

Install the spring with the smaller pitch “a” facing up “A”.

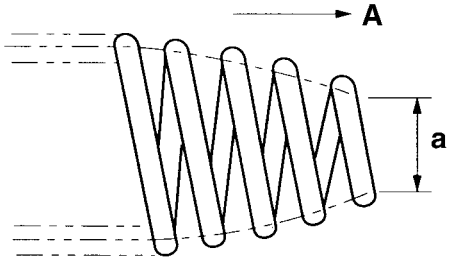

d. Install the upper spring seat.
e. Install the spacer.
f. Install the nut.
g. Reinstall the rod puller attachment.
h. Press down on the spacer with the fork spring compressor “1”.
i. Pull up the rod puller and install the rod holder “2” between the nut “3” and the spacer “4”.

Rod puller
90890-01437
Universal damping rod bleeding tool set
YM-A8703
Rod puller attachment (M10)
90890-01436
Universal damping rod bleeding tool set
YM-A8703
Fork spring compressor
90890-01441
YM-01441
Rod holder
90890-01434
Damper rod holder double ended
YM-01434

TIP
Use the side of the rod holder that is marked "B".

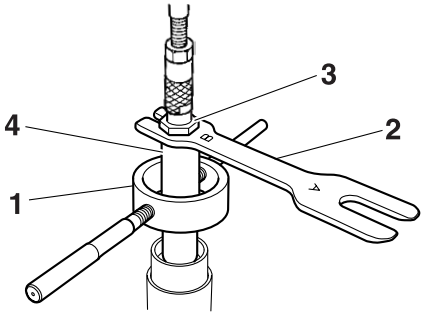

j. Remove the rod puller and rod puller attachment.
k. Install the nut "1" all the way onto the damper rod assembly.

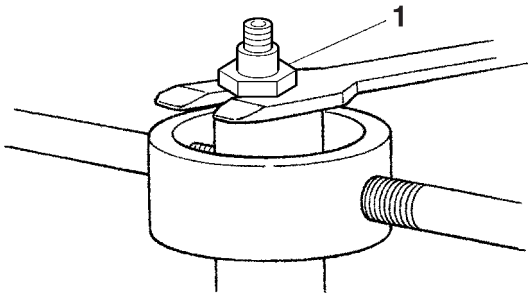

l. Install the damper adjusting valve spring, the damper adjusting valve and the damper adjusting rod.
m. Install the washer and cap bolt, and then finger tighten the cap bolt.
n. Hold the nut and tighten the spring preload adjusting bolt "2" into the cap bolt to specification.

EWA14B1011
WARNING
Always use a new cap bolt O-ring.

ECA14B1009
NOTICE
When tightening the spring preload adjusting bolt "2" into the cap bolt, be sure not to break the projections "a" on the cap bolt collar "3".

TIP
Hold the nut "1" using a proper tool that has a thickness "b" of 4.0 mm (0.16 in) or less.

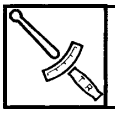

Nut and cap bolt
25 Nm (2.5 m·kgf, 18 ft·lbf)

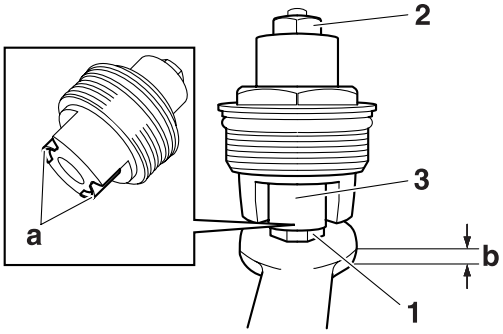

o. Remove the rod holder and fork spring compressor.

▲▲▲▲▲▲▲▲▲▲▲▲▲▲▲▲▲▲▲▲▲▲▲▲▲▲▲▲▲▲▲▲

16. Install:
    - Cap bolt
      (to the outer tube)

TIP
- Temporarily tighten the cap bolt.
- When to tighten the cap bolt to the specified torque is after installing the front fork leg to the vehicle and tightening the lower bracket pinch bolts.

EAS14B1009
INSTALLING THE FRONT FORK LEGS
The following procedure applies to both of the front fork legs.

1. Install:
   - Front fork leg
     Temporarily tighten the upper and lower bracket pinch bolts.

EWA14B1012

WARNING

Make sure the brake hoses are routed properly.

TIP

Make sure the outer tube is flush with the top of the upper bracket.

2. Tighten:
   - Lower bracket pinch bolts “1” and “2”

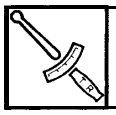	**Lower bracket pinch bolt** **23 Nm (2.3 m·kgf, 17 ft·lbf)**

TIP

Tighten each bolt to 23 Nm (2.3 m·kgf, 17 ft·lbf) in the order pinch bolt “1” → pinch bolt “2” → pinch bolt “1” → pinch bolt “2”.

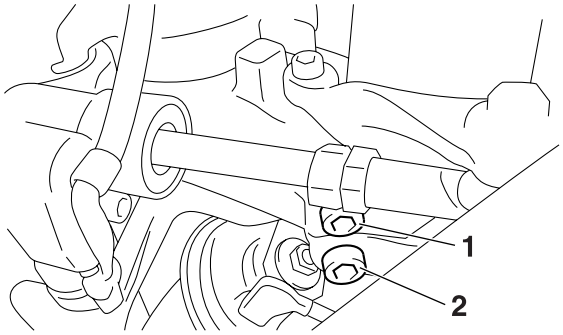

3. Tighten:
   - Cap bolt “1”

	**Cap bolt** **20 Nm (2.0 m·kgf, 14 ft·lbf)**

   - Handlebar bolt “2”

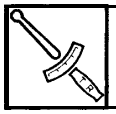	**Handlebar bolt** **13 Nm (1.3 m·kgf, 9.4 ft·lbf)**

   - Handlebar pinch bolt “3”

	**Handlebar pinch bolt** **16 Nm (1.6 m·kgf, 11 ft·lbf)**

   - Upper bracket pinch bolt “4”

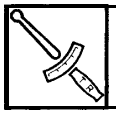	**Upper bracket pinch bolt** **26 Nm (2.6 m·kgf, 19 ft·lbf)**

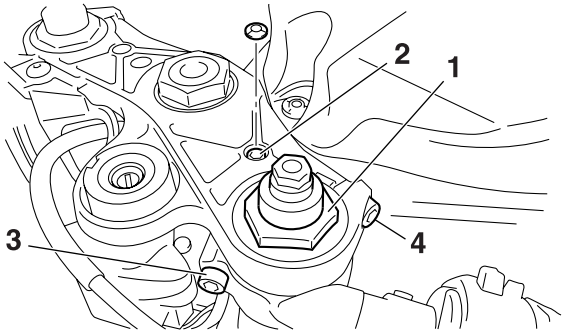

4. Check:
   - Cable routing

TIP

Make sure the brake hose, throttle cables, clutch cable, and handlebar switch leads are routed properly. Refer to “CABLE ROUTING” on page 2-49.

5. Install:
   - Plastic band “1”

TIP

Fasten the front brake hose to the right front fork leg with the plastic locking tie.

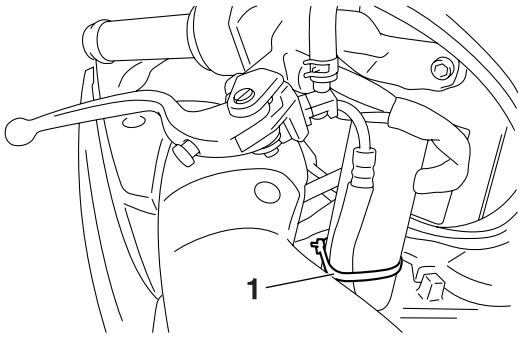

6. Adjust:
   - Spring preload
   - Rebound damping
   - Compression damping
     Refer to “ADJUSTING THE FRONT FORK LEGS” on page 3-23.

EAS23090
STEERING HEAD

Removing the lower bracket

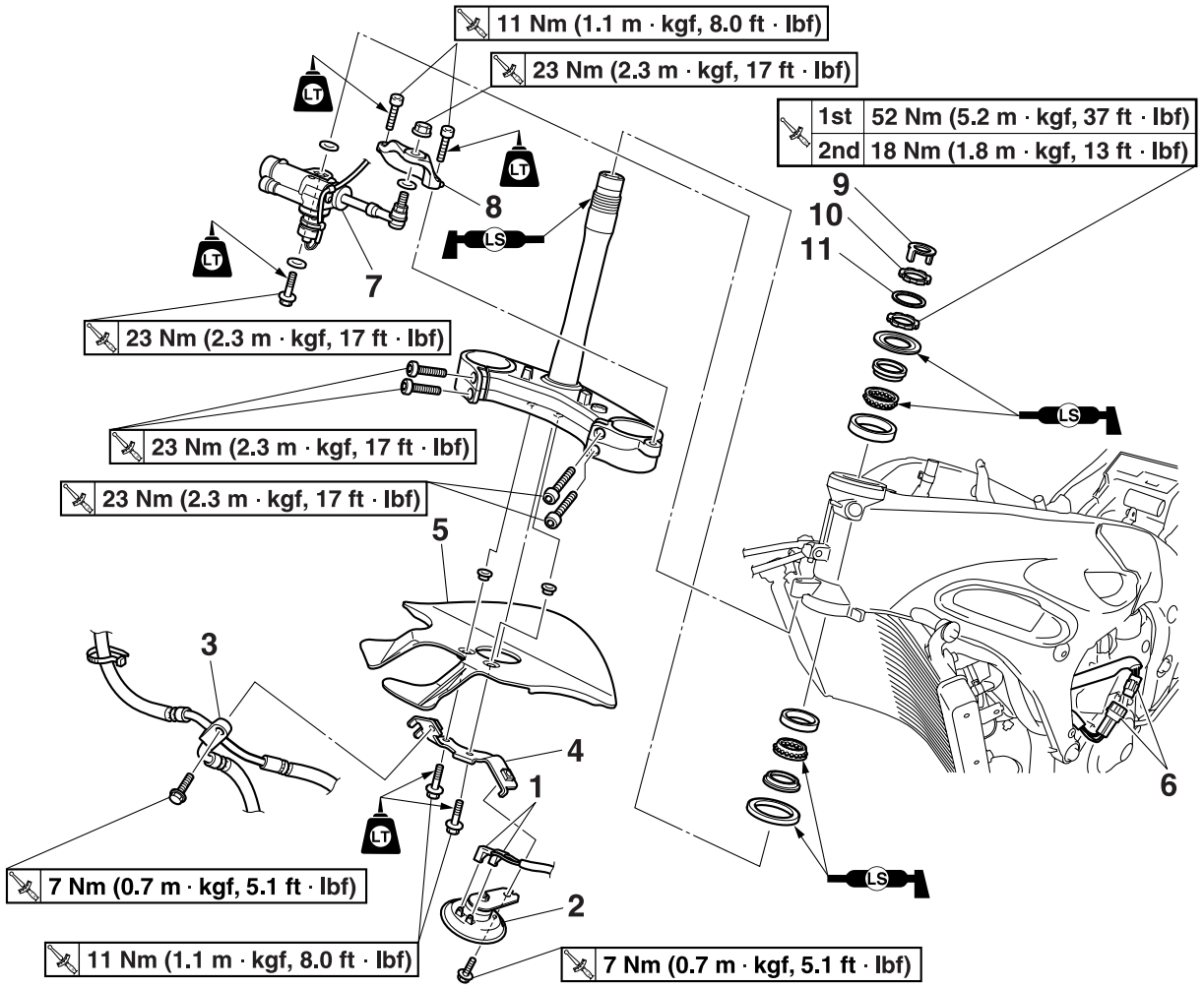

Order	Job/Parts to remove	Q'ty	Remarks
	Side cowling		Refer to "GENERAL CHASSIS" on page 4-1.
	Air duct		Refer to "GENERAL CHASSIS" on page 4-1.
	Front fork legs		Refer to "FRONT FORK" on page 4-60.
	Handlebars		Refer to "HANDLEBARS" on page 4-55.
1	Horn lead connector	2	Disconnect.
2	Horn	1	
3	Front brake hose joint	1	
4	Front brake hose joint bracket	1	
5	Lower bracket cover	1	
6	Steering damper coupler	1	Disconnect.
7	Steering damper	1	
8	Steering damper bracket	1	
9	Lock washer	1	
10	Upper ring nut	1	
11	Rubber washer	1	

Removing the lower bracket

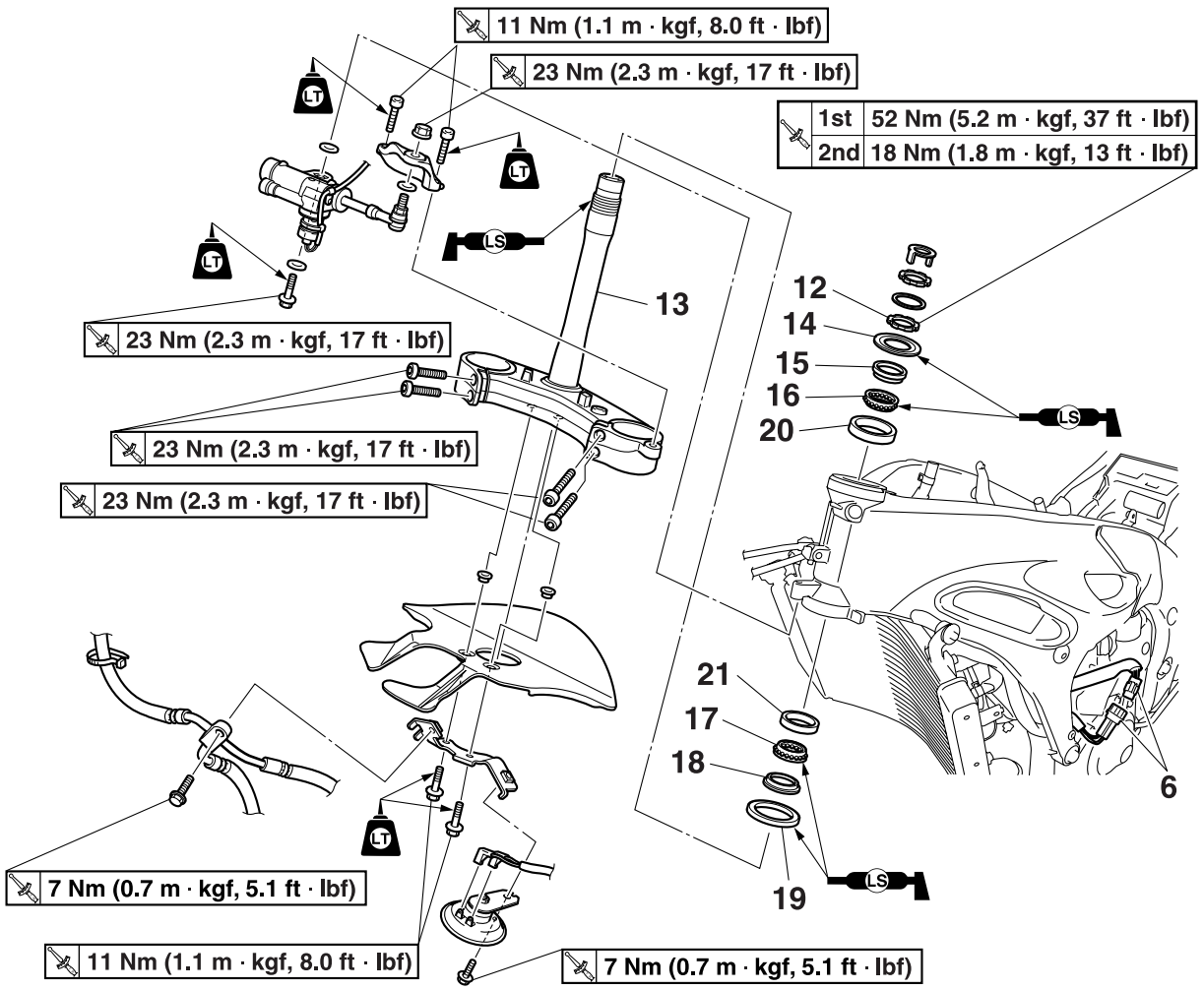

Order	Job/Parts to remove	Q'ty	Remarks
12	Lower ring nut	1	
13	Lower bracket	1	
14	Upper bearing cover	1	
15	Upper bearing inner race	1	
16	Upper bearing	1	
17	Lower bearing	1	
18	Lower bearing inner race	1	
19	Lower bearing dust seal	1	
20	Upper bearing outer race	1	
21	Lower bearing outer race	1	
			For installation, reverse the removal procedure.

EAS23110
REMOVING THE LOWER BRACKET
1. Stand the vehicle on a level surface.

EWA13120
WARNING
Securely support the vehicle so that there is no danger of it falling over.

2. Remove:
   - Upper ring nut “1”
     (with the steering nut wrench “2”)

Steering nut wrench
90890-01403
Exhaust flange nut wrench
YU-A9472

EWA13730
WARNING
Securely support the lower bracket so that there is no danger of it falling.

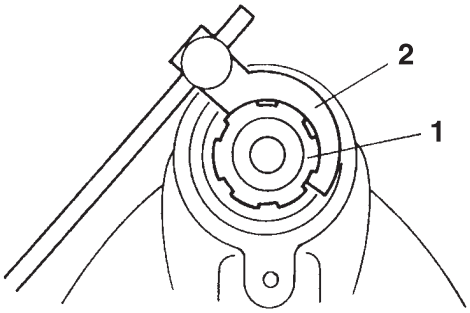

EAS23130
CHECKING THE STEERING HEAD
1. Wash:
   - Bearings
   - Bearing races

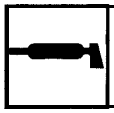

Recommended cleaning solvent
Kerosene

2. Check:
   - Bearings “1”
   - Bearing races “2”
     Damage/pitting → Replace.

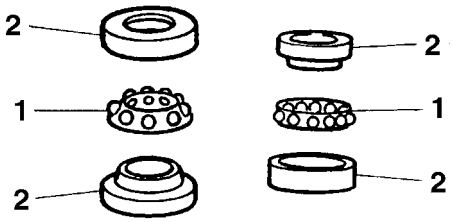

3. Replace:
   - Bearings
   - Bearing races

▼▼▼▼▼▼▼▼▼▼▼▼▼▼▼▼▼▼▼▼▼▼▼▼▼▼▼▼▼▼▼▼

a. Remove the bearing races “1” from the steering head pipe with a long rod “2” and hammer.
b. Remove the bearing race from the lower bracket “3” with a floor chisel “4” and hammer.
c. Install a new dust seal and new bearing races.

ECA14270
NOTICE
If the bearing race is not installed properly, the steering head pipe could be damaged.

TIP
- Always replace the bearings and bearing races as a set.
- Whenever the steering head is disassembled, replace the rubber seal.

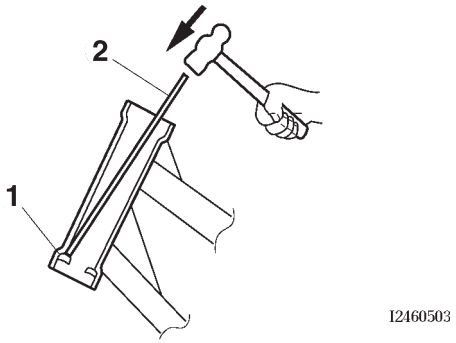

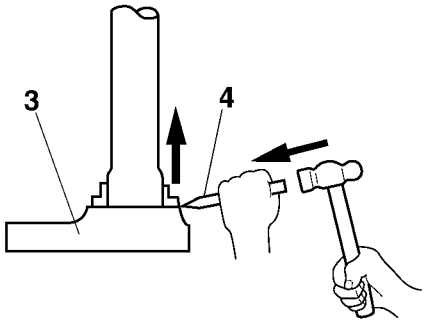

▲▲▲▲▲▲▲▲▲▲▲▲▲▲▲▲▲▲▲▲▲▲▲▲▲▲▲▲▲▲▲▲

4. Check:
   - Upper bracket
     Refer to “HANDLEBARS” on page 4-55.
   - Lower bracket
     (along with the steering stem)
     Bends/cracks/damage → Replace.

EAS23140
INSTALLING THE STEERING HEAD

1. Lubricate:
   - Upper bearing
   - Lower bearing
   - Bearing races

	Recommended lubricant **Lithium-soap-based grease**

2. Install:
   - Lower ring nut “1”
   - Rubber washer “2”
   - Upper ring nut “3”
   - Lock washer “4”
     Refer to “CHECKING AND ADJUSTING THE STEERING HEAD” on page 3-20.

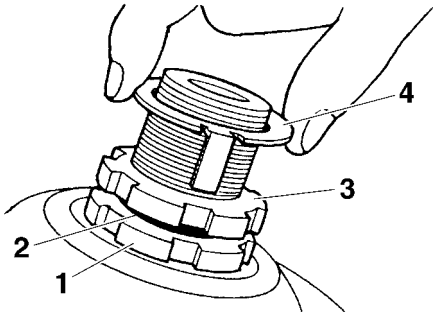

3. Install:
   - Upper bracket
   - Steering stem nut
     Refer to “HANDLEBARS” on page 4-55.

TIP
Temporarily tighten the steering stem nut.

4. Install:
   - Front fork legs
     Refer to “INSTALLING THE FRONT FORK LEGS” on page 4-69.

TIP
Temporarily tighten the upper and lower bracket pinch bolts.

EAS14B1005
CHECKING THE STEERING DAMPER

1. Check:
   - Steering damper body
     Damage/oil leaks → Replace.
     (It replace with the assembly.)
   - Steering damper rod
     Bends/scratch → Replace.
     (It replace with the assembly.)
   - Bearing
     Damage/pitting → Replace.
     (It replace with the assembly.)

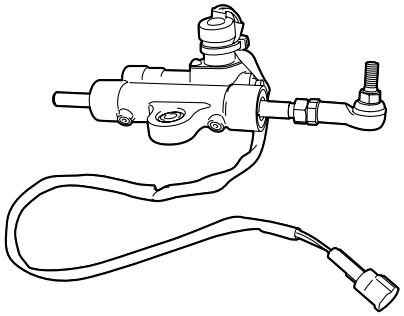

EAS23160

REAR SHOCK ABSORBER ASSEMBLY

Removing the rear shock absorber assembly

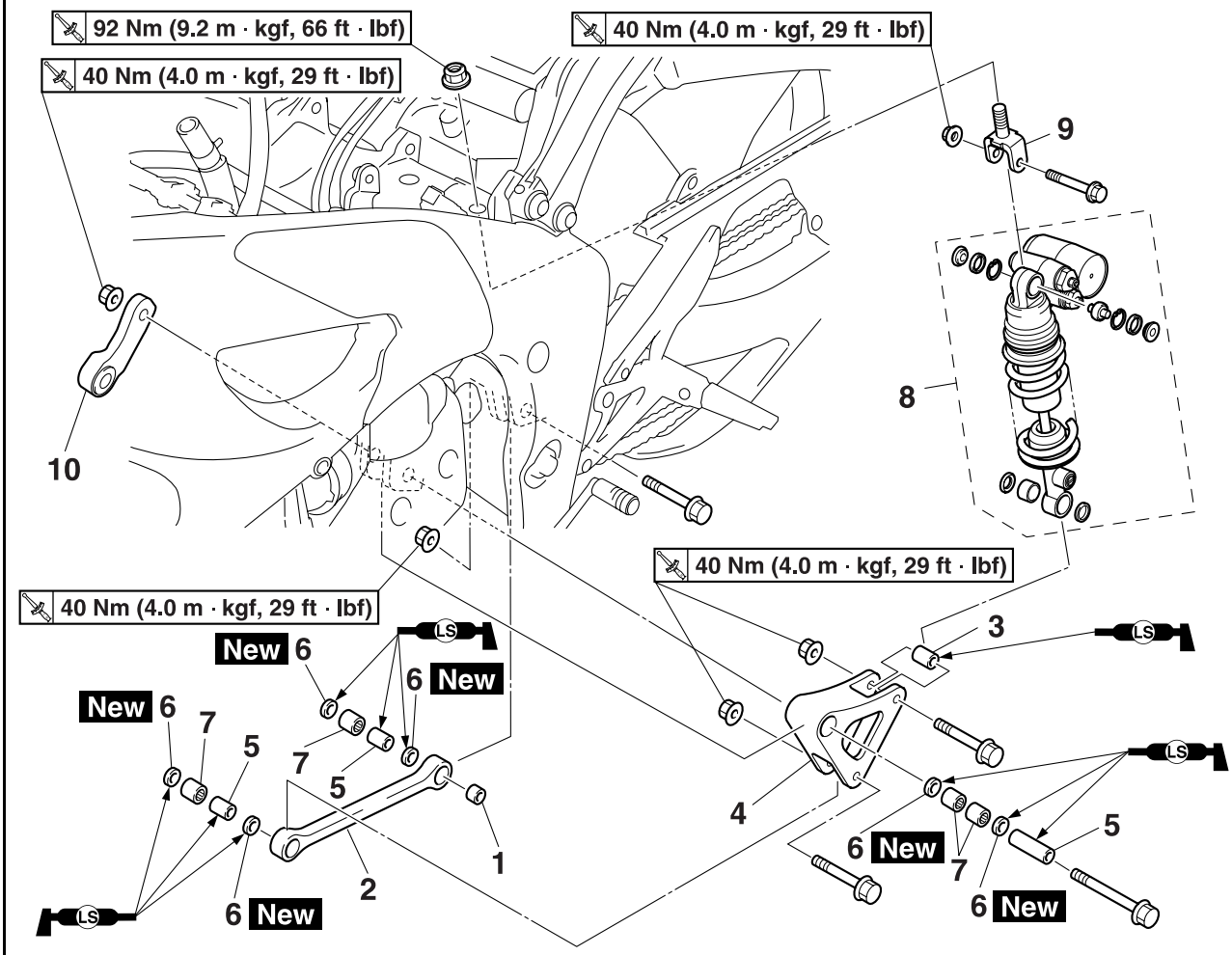

Order	Job/Parts to remove	Q'ty	Remarks
	Rider seat		Refer to "GENERAL CHASSIS" on page 4-1.
	Passenger seat		Refer to "GENERAL CHASSIS" on page 4-1.
	Fuel tank		Refer to "FUEL TANK" on page 7-1.
	Muffler		Refer to "ENGINE REMOVAL" on page 5-3.
1	Connecting arm collar	1	
2	Connecting arm	1	
3	Relay arm collar	1	
4	Relay arm	1	
5	Collar	3	
6	Oil seal	6	
7	Bearing	4	
8	Rear shock absorber assembly	1	
9	Rear shock absorber assembly bracket	1	
10	Exhaust chamber stay	1	
			For installation, reverse the removal procedure.

EAS14B1010
HANDLING THE REAR SHOCK ABSORBER

EWA14B1013
WARNING

This rear shock absorber contains highly compressed nitrogen gas. Before handling the rear shock absorber, read and make sure you understand the following information. The manufacturer cannot be held responsible for property damage or personal injury that may result from improper handling of the rear shock absorber.
- **Do not tamper or attempt to open the rear shock absorber.**
- **Do not subject the rear shock absorber to an open flame or any other source of high heat. High heat can cause an explosion due to excessive gas pressure.**
- **Do not deform or damage the rear shock absorber in any way. Rear shock absorber damage will result in poor damping performance.**

EAS23190
DISPOSING OF A REAR SHOCK ABSORBER

1. Gas pressure must be released before disposing of a rear shock absorber. To release the gas pressure, drill a 2.0–3.0 mm (0.08–0.12 in) hole through the rear shock absorber at a point 40 mm (1.57 in) from its end as shown.

EWA13760
WARNING

Wear eye protection to prevent eye damage from released gas or metal chips.

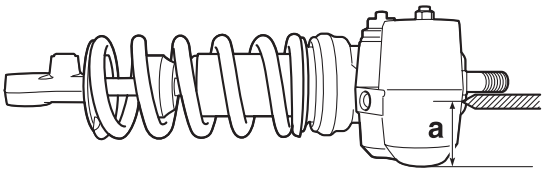

a. 40 mm (1.57 in)

EAS23230
REMOVING THE REAR SHOCK ABSORBER ASSEMBLY

1. Stand the vehicle on a level surface.

EWA13120
WARNING

Securely support the vehicle so that there is no danger of it falling over.

TIP
Place the vehicle on a suitable stand so that the rear wheel is elevated.

2. Remove:
   - Rear shock absorber assembly lower bolt “1”
   - Connecting arm and swingarm bolt “2”

TIP
While removing the rear shock absorber assembly lower bolt, hold the swingarm so that it does not drop down.

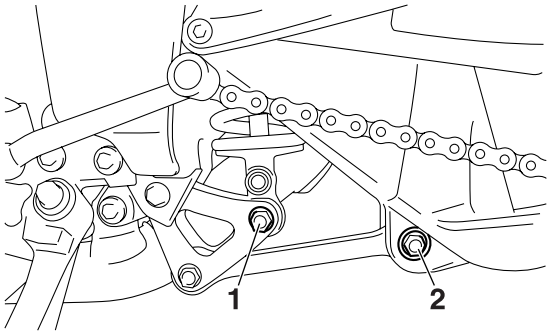

3. Remove:
   - Rear shock absorber assembly bracket nut “1”
   - Rear shock absorber assembly

TIP
Remove the rear shock absorber assembly from between the swingarm and frame.

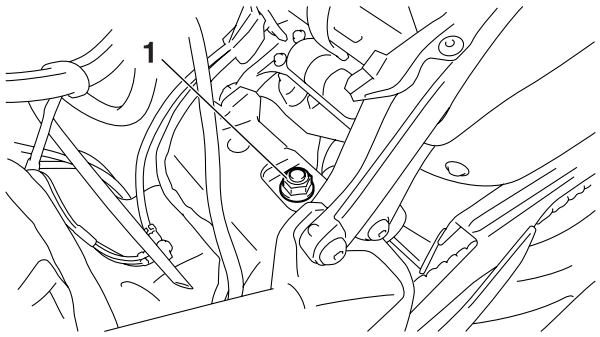

EAS23240
CHECKING THE REAR SHOCK ABSORBER ASSEMBLY

1. Check:
   - Rear shock absorber rod
     Bends/damage → Replace the rear shock absorber assembly.
   - Rear shock absorber
     Gas leaks/oil leaks → Replace the rear shock absorber assembly.

- Spring
  Damage/wear → Replace the rear shock absorber assembly.
- Bearing
  Damage/wear → Replace.
- Bolts
  Bends/damage/wear → Replace.

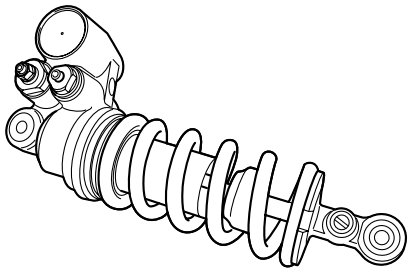

EAS23260
CHECKING THE CONNECTING ARM AND RELAY ARM

1. Check:
   - Connecting arm “1”
   - Relay arm “2”
     Damage/wear → Replace.

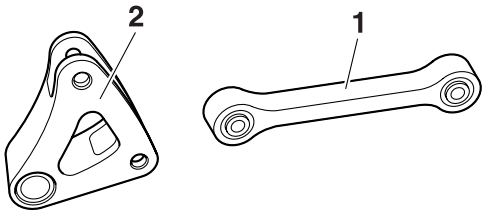

2. Check:
   - Bearings
     Damage/wear → Replace.
3. Check:
   - Collars
     Damage/scratches → Replace.

EAS23270
INSTALLING THE RELAY ARM

1. Lubricate:
   - Collars
   - Bearings

	Recommended lubricant **Lithium soap base grease**

2. Install:
   - Bearing “1”
   - Oil seals “2”
     (to the relay arm)
   - Relay arm “3”
   - Connecting arm “4”

	Installed depth of bearing “a” **4.0 mm (0.16 in)** **Installed depth of oil seal “b”** **1.0 mm (0.04 in)**

TIP
When installing the oil seals to the relay arm or connecting arm, face the character stamp of the oil seals outside.

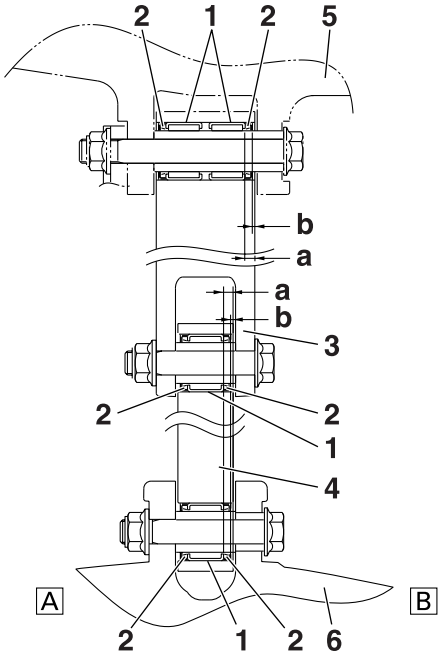

5. Frame
6. Swingarm

A. Right side
B. Left side

EAS23310
INSTALLING THE REAR SHOCK ABSORBER ASSEMBLY

1. Lubricate:
   - Collars
   - Bearings

	Recommended lubricant **Molybdenum disulfide grease**

2. Install:
   - Rear shock absorber assembly

TIP
Install the rear shock absorber assembly lower bolt from the left.

3. Tighten:
   - Rear shock absorber assembly bracket nut

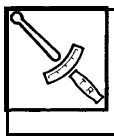

Rear shock absorber assembly bracket nut
92 Nm (9.2 m·kgf, 66 ft·lbf)

   - Rear shock absorber assembly lower nut

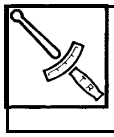

Rear shock absorber assembly lower nut
40 Nm (4.0 m·kgf, 29 ft·lbf)

4. Install:
   - Connecting arm

TIP

When installing the connecting arm, lift up the swingarm.

5. Tighten:
   - Connecting arm and swingarm nut

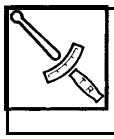

Connecting arm and swingarm nut
40 Nm (4.0 m·kgf, 29 ft·lbf)

EAS23330
SWINGARM

Removing the swingarm

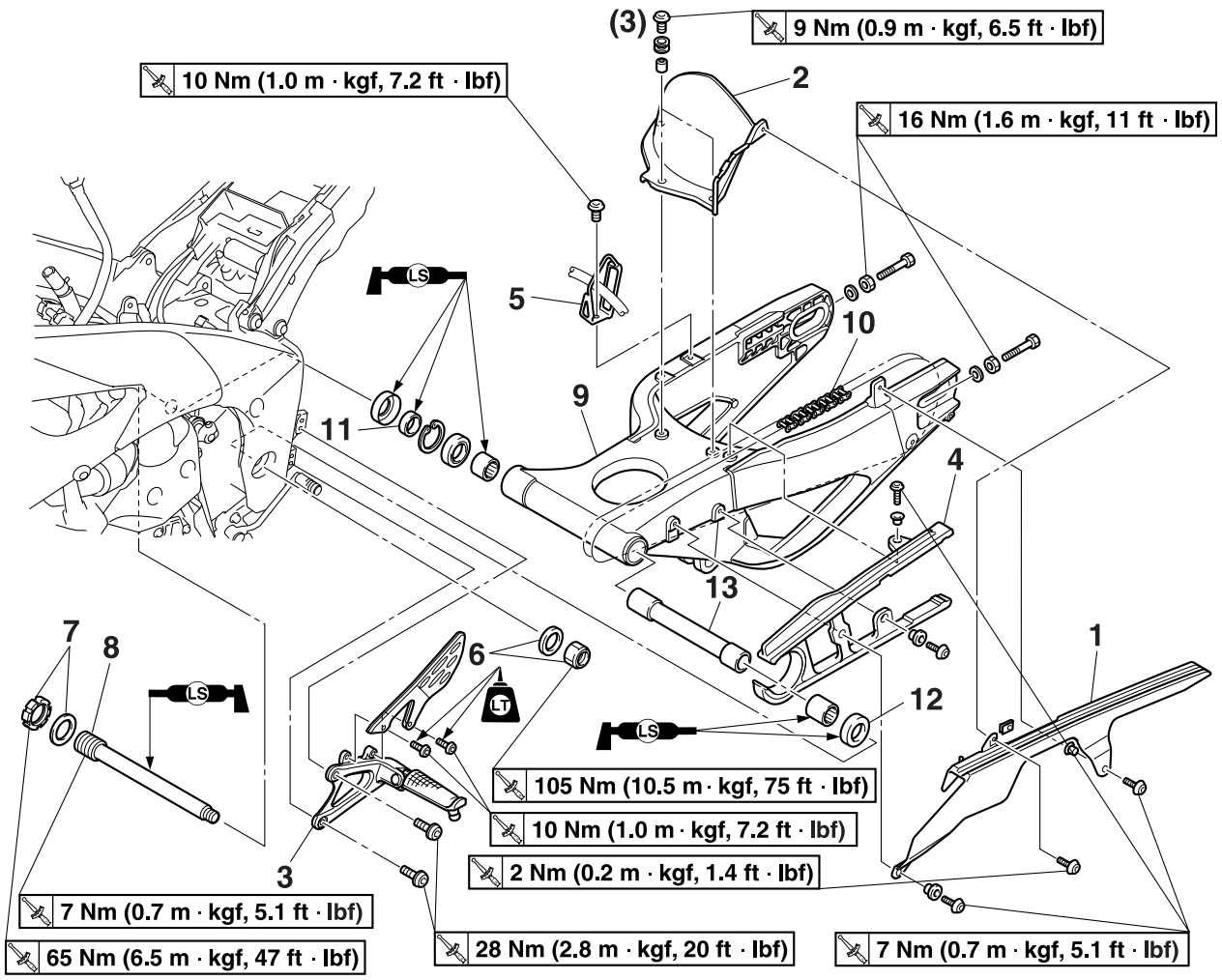

Order	Job/Parts to remove	Q'ty	Remarks
	Rear wheel		Refer to "REAR WHEEL" on page 4-24.
	Rear shock absorber assembly		Refer to "REAR SHOCK ABSORBER ASSEMBLY" on page 4-75.
1	Drive chain guard	1	
2	Rear fender	1	
3	Left footrest	1	
4	Drive chain guide	1	
5	Brake hose holder	1	
6	Pivot shaft nut/washer	1/1	
7	Pivot shaft ring nut/washer	1/1	
8	Pivot shaft	1	
9	Swingarm	1	
10	Drive chain	1	
11	Collar	1	
12	Dust cover	1	
13	Spacer	1	

Removing the swingarm

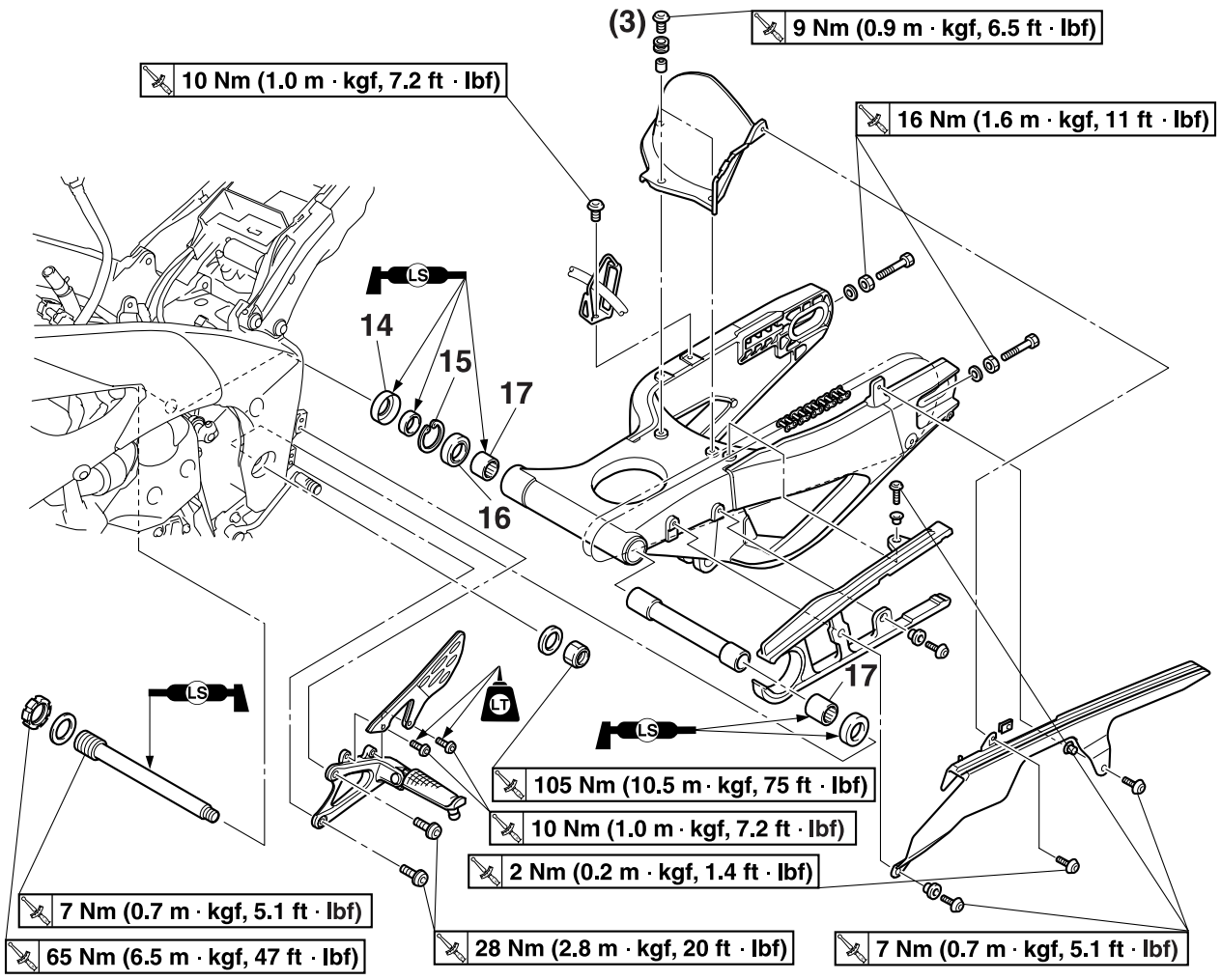

Order	Job/Parts to remove	Q'ty	Remarks
14	Oil seal	1	
15	Circlip	1	
16	Bearing	1	
17	Bearing	2	
			For installation, reverse the removal procedure.

EAS23350
REMOVING THE SWINGARM

1. Stand the vehicle on a level surface.

EWA13120
WARNING

Securely support the vehicle so that there is no danger of it falling over.

TIP
Place the vehicle on a suitable stand so that the rear wheel is elevated.

2. Remove:
   - Connecting arm bolt “1”
   - Relay arm bolt “2”
   - Rear shock absorber assembly lower bolt “3”

TIP
When removing the connecting arm bolt, hold the swingarm so that it does not drop down.

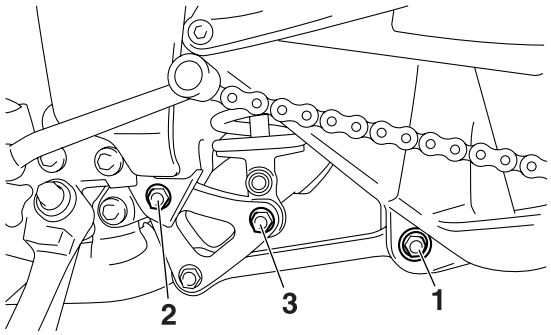

3. Measure:
   - Swingarm side play
   - Swingarm vertical movement

▼▼▼▼▼▼▼▼▼▼▼▼▼▼▼▼▼▼▼▼▼▼▼▼▼▼▼▼▼▼▼▼

a. Measure the tightening torque of the pivot shaft nut, pivot shaft ring nut, and pivot shaft.

Pivot shaft nut
105 Nm (10.5 m·kgf, 75 ft·lbf)
Pivot shaft ring nut
65 Nm (6.5 m·kgf, 47 ft·lbf)
Pivot shaft
7 Nm (0.7 m·kgf, 5.1 ft·lbf)

b. Measure the swingarm side play “A” by moving the swingarm from side to side.
c. If the swingarm side play is out of specification, check the spacer, bearings, collar and dust cover.

Swingarm side play (at the end of the swingarm)
1.0 mm (0.04 in)

d. Check the swingarm vertical movement “B” by moving the swingarm up and down.
If swingarm vertical movement is not smooth or if there is binding, check the spacer, bearings, collar and dust cover.

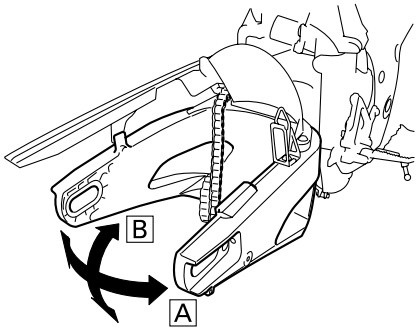

▲▲▲▲▲▲▲▲▲▲▲▲▲▲▲▲▲▲▲▲▲▲▲▲▲▲▲▲▲▲▲▲

4. Remove:
   - Drive chain
     Refer to “REMOVING THE DRIVE CHAIN” on page 4-85.
5. Remove:
   - Pivot shaft nut
   - Swingarm pivot shaft ring nut “1”

TIP
Loosen the swingarm pivot shaft ring nut with the ring nut wrench “2”.

Ring nut wrench
90890-01507
YM-01507

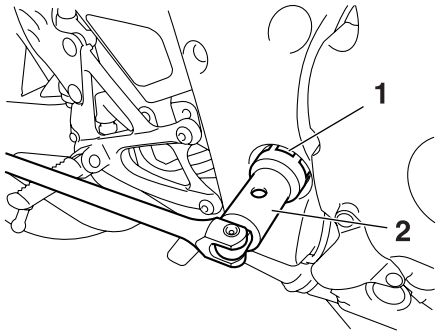

6. Remove:
   - Swingarm pivot shaft “1”

TIP
Loosen the swingarm pivot shaft with the damper rod holder (22 mm) “2”.

Damper rod holder (22 mm)
90890-01365

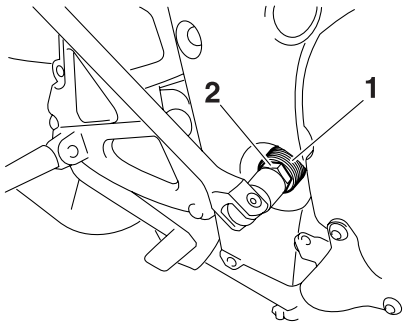

EAS23360
CHECKING THE SWINGARM

1. Check:
   - Swingarm
     Bends/cracks/damage → Replace.

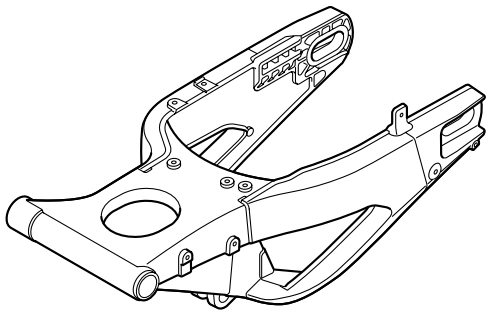

2. Check:
   - Pivot shaft
     Roll the pivot shaft on a flat surface.
     Bends → Replace.

EWA13770
WARNING

Do not attempt to straighten a bent pivot shaft.

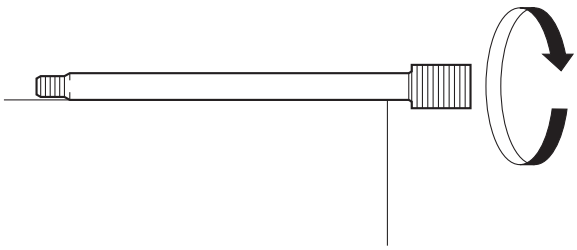

3. Wash:
   - Pivot shaft
   - Dust cover
   - Spacer
   - Washers
   - Bearings

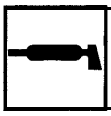

Recommended cleaning solvent
Kerosene

4. Check:
   - Dust cover “1”
   - Spacer “2”
   - Collar “3”
   - Bearings “4”
     Damage/wear → Replace.

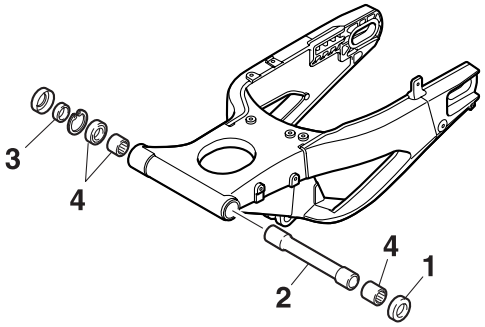

EAS14B1011
INSTALLING THE SWINGARM

1. Lubricate:
   - Bearings
   - Spacer
   - Dust cover
   - Pivot shaft

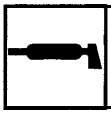

Recommended lubricant
Lithium-soap-based grease

2. Install:
   - Bearings “1”
   - Bearing “2”
   - Circlip “3”
   - Oil seal “4”

Installed depth of bearing “a”
0–1.0 mm (0–0.04 in)

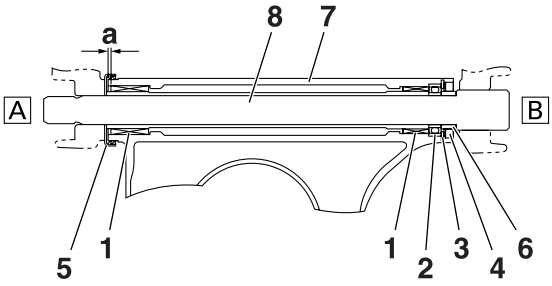

5. Dust cover
6. Collar
7. Swingarm
8. Pivot shaft

A. Left side
B. Right side

3. Install:
   - Pivot shaft "1"

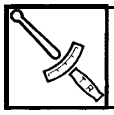

Pivot shaft
7 Nm (0.7 m·kgf, 5.1 ft·lbf)

TIP
Tighten the pivot shaft with the damper rod holder (22 mm) "2".

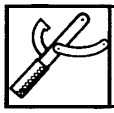

Damper rod holder (22 mm)
90890-01365

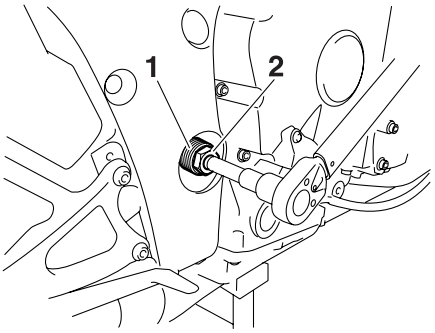

4. Install:
   - Pivot shaft ring nut "1"

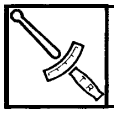

Pivot shaft ring nut
65 Nm (6.5 m·kgf, 47 ft·lbf)

TIP
Tighten the pivot shaft ring nut with the ring nut wrench "2".

Ring nut wrench
90890-01507
YM-01507

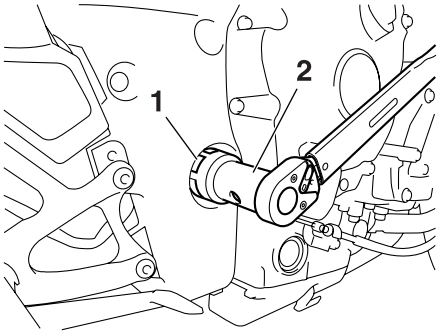

5. Install:
   - Pivot shaft nut "1"

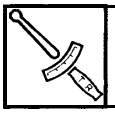

Pivot shaft nut
105 Nm (10.5 m·kgf, 75 ft·lbf)

Lubricant the pivot shaft with lithium-soap-based grease.

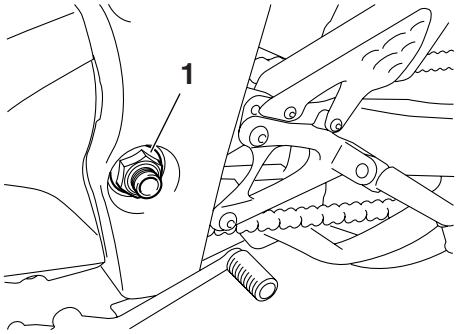

6. Adjust:
   - Drive chain slack
     Refer to "ADJUSTING THE DRIVE CHAIN SLACK" on page 3-19.

Drive chain slack (when adjusting the drive chain)
25.0–35.0 mm (0.98–1.38 in)
Drive chain slack (when replacing the drive chain and sprocket)
20.0–30.0 mm (0.79–1.18 in)

EAS23400
CHAIN DRIVE

Removing the drive sprocket and drive chain

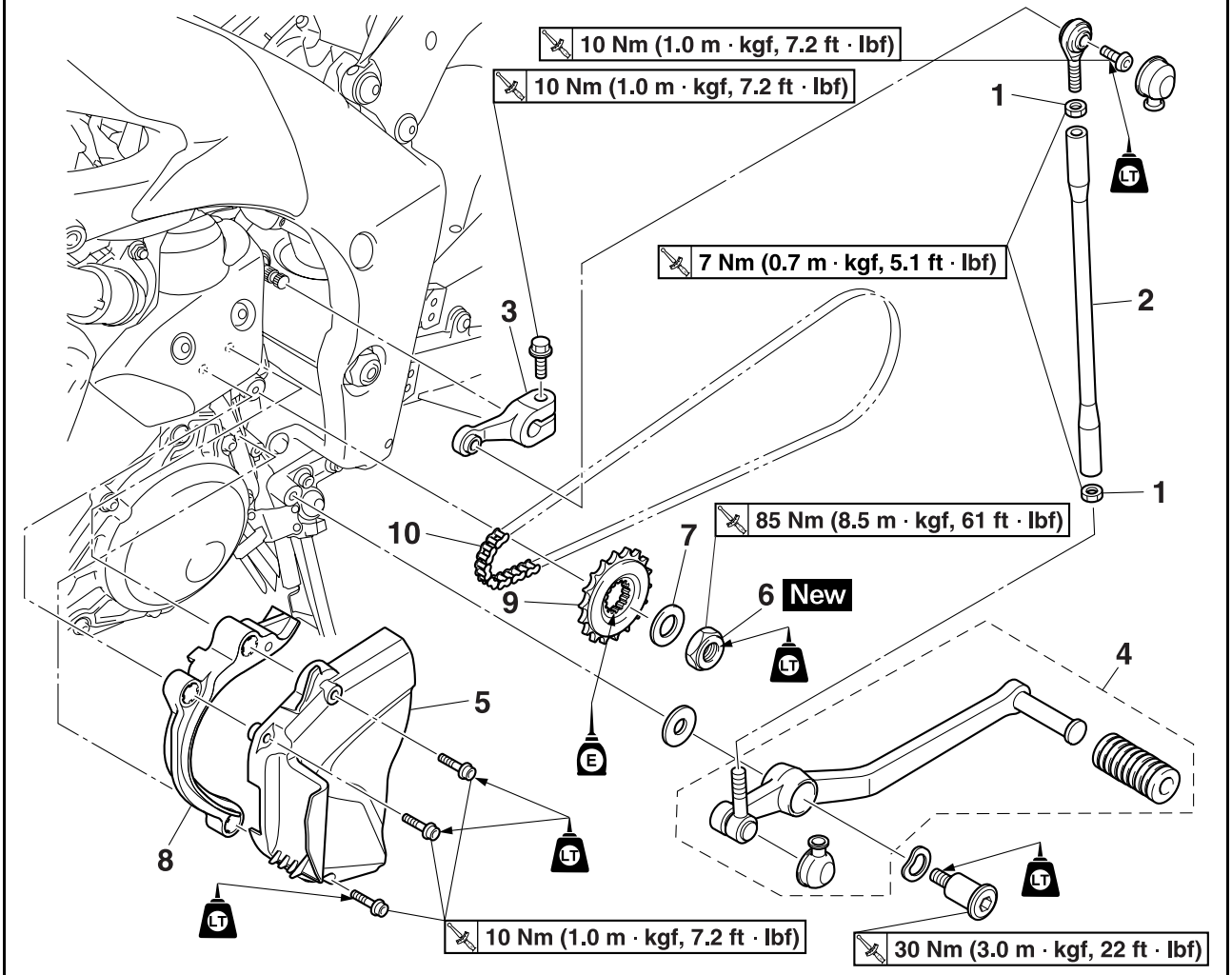

Order	Job/Parts to remove	Q'ty	Remarks
	Drive chain		Refer to "ADJUSTING THE DRIVE CHAIN SLACK" on page 3-19.
1	Locknut	2	
2	Shift rod	1	
3	Shift arm	1	
4	Shift pedal	1	
5	Drive sprocket cover	1	
6	Drive sprocket nut	1	
7	Washer	1	
8	Drive chain guide (drive sprocket side)	1	
9	Drive sprocket	1	
10	Drive chain	1	
			For installation, reverse the removal procedure.

EAS23410
REMOVING THE DRIVE CHAIN
1. Stand the vehicle on a level surface.

EWA13120
WARNING

Securely support the vehicle so that there is no danger of it falling over.

TIP
Place the vehicle on a suitable stand so that the rear wheel is elevated.

2. Remove:
   - Drive chain

TIP
Cut the drive chain with the drive chain cut & rivet tool.

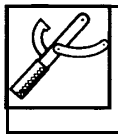

Drive chain cut & rivet tool
90890-01550
YM-01550

EAS14B1012
CHECKING THE DRIVE CHAIN
1. Measure:
   - Measure the dimension between 15-links on the inner side “a” and outer side “b” of the roller and calculate the dimension between pin centers.
   - Dimension “c” between pin centers = (Inner dimension “a” + Outer dimension “b”)/2
   - 15-link section “c” of the drive chain
     Out of specification → Replace the drive chain, front drive sprocket and rear drive sprocket as a set.

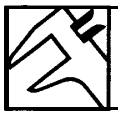

15-link length limit
239.3 mm (9.42 in)

TIP
- While measuring the 15-link section, push down on the drive chain to increase its tension.
- Perform this measurement at two or three different places.

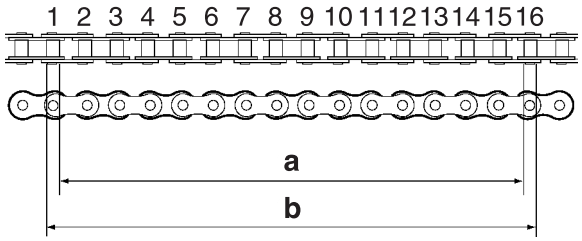

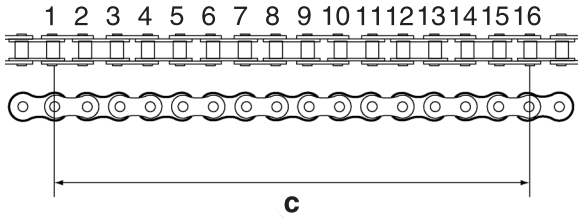

2. Check:
   - Drive chain
     Stiffness → Clean and lubricate or replace.

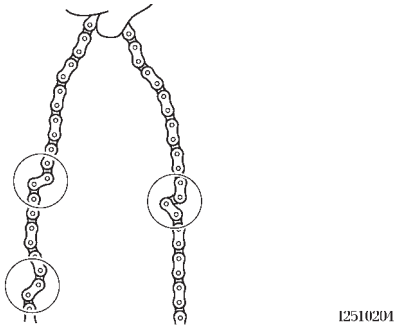

3. Clean:
   - Drive chain

▼▼▼▼▼▼▼▼▼▼▼▼▼▼▼▼▼▼▼▼▼▼▼▼▼▼▼▼▼▼▼▼▼▼

a. Wipe the drive chain with a clean cloth.
b. Put the drive chain in kerosene and remove any remaining dirt.
c. Remove the drive chain from the kerosene and completely dry it.

ECA14B1010
NOTICE

- **This vehicle has a drive chain with small rubber O-rings “1” between the drive chain side plates. Never use high-pressure water or air, steam, gasoline, certain solvents (e.g., benzine), or a coarse brush to clean the drive chain. High-pressure methods could force dirt or water into the drive chain’s internals, and solvents will deteriorate the O-rings. A coarse brush can also damage the O-rings. Therefore,**

use only kerosene to clean the drive chain.
- **Do not soak the drive chain in kerosene for more than ten minutes, otherwise the O-rings can be damaged.**

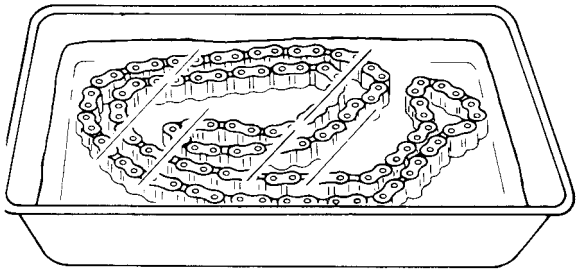

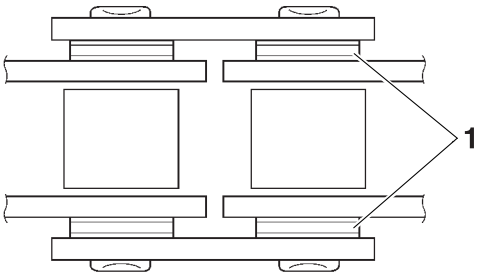

▲▲▲▲▲▲▲▲▲▲▲▲▲▲▲▲▲▲▲▲▲▲▲▲▲▲▲▲▲▲

4. Check:
   - O-rings “1”
     Damage → Replace the drive chain.
   - Drive chain rollers “2”
     Damage/wear → Replace the drive chain.
   - Drive chain side plates “3”
     Damage/wear/cracks → Replace the drive chain.

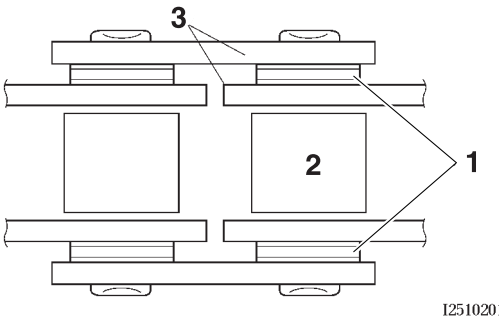

5. Lubricate:
   - Drive chain

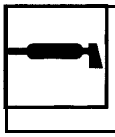

Recommended lubricant
Chain lubricant suitable for O-ring chains

EAS23460
CHECKING THE DRIVE SPROCKET

1. Check:
   - Drive sprocket
     More than 1/4 tooth “a” wear → Replace the drive chain sprockets as a set.
     Bent teeth → Replace the drive chain sprockets as a set.

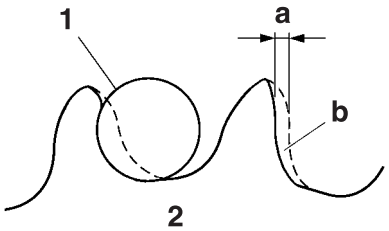

b. Correct

1. Drive chain roller
2. Drive chain sprocket

EAS23470
CHECKING THE REAR WHEEL SPROCKET

Refer to “CHECKING AND REPLACING THE REAR WHEEL SPROCKET” on page 4-28.

EAS23480
CHECKING THE REAR WHEEL DRIVE HUB

Refer to “CHECKING THE REAR WHEEL DRIVE HUB” on page 4-28.

EAS23490
INSTALLING THE DRIVE CHAIN

1. Install:
   - Drive chain

ECA14B1023

NOTICE

Be sure to put on safety goggles when working.

Drive chain cut & rivet tool
90890-01550
YM-01550

▼▼▼▼▼▼▼▼▼▼▼▼▼▼▼▼▼▼▼▼▼▼▼▼▼▼▼▼▼▼

a. When press fitting the connecting plate “1”, make sure the space “a” between the end of the connecting pin “2” and the connecting plate is 1.2–1.4 mm (0.05–0.06 in).

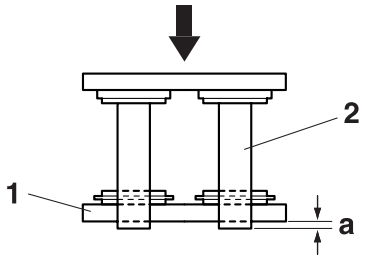

b. After riveting, make sure the length between the edges “b” of the connecting pin “2” is 5.7–6.0 mm (0.22–0.24 in).

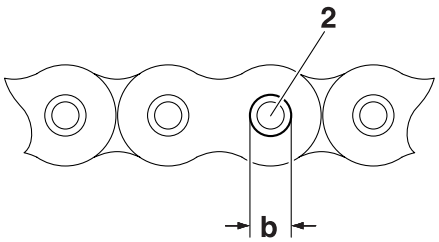

c. After riveting, make sure the space “c”, which is inside of the connecting link “3” and inside of the connecting plate “1”, is 16.3–16.5 mm (0.64–0.65 in).

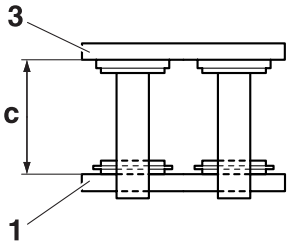

▲▲▲▲▲▲▲▲▲▲▲▲▲▲▲▲▲▲▲▲▲▲▲▲▲▲▲▲▲▲▲▲▲▲

2. Lubricate:
   - Drive chain

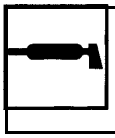

Recommended lubricant
Chain lubricant suitable for O-ring chains

3. Install:
   - Drive sprocket “1”
   - Washer “2”
   - Drive sprocket nut “3”

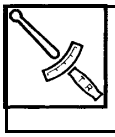

Drive sprocket nut
85 Nm (8.5 m·kgf, 61 ft·lbf)
LOCTITE®

TIP

- While applying the rear brake, tighten the drive sprocket nut.

- Stake the drive sprocket nut at cutouts, “a” in the drive axle.

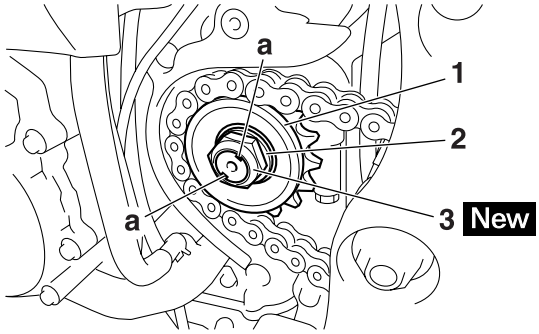

ECA14300

NOTICE

Never install a new drive chain onto worn drive chain sprockets; this will dramatically shorten the drive chain’s life.

4. Adjust:
   - Drive chain slack
     Refer to “ADJUSTING THE DRIVE CHAIN SLACK” on page 3-19.

Drive chain slack (when adjusting the drive chain)
25.0–35.0 mm (0.98–1.38 in)
Drive chain slack (when replacing the drive chain and sprocket)
20.0–30.0 mm (0.79–1.18 in)

ECA13550

NOTICE

A drive chain that is too tight will overload the engine and other vital parts, and one that is too loose can skip and damage the swingarm or cause an accident. Therefore, keep the drive chain slack within the specified limits.

ENGINE

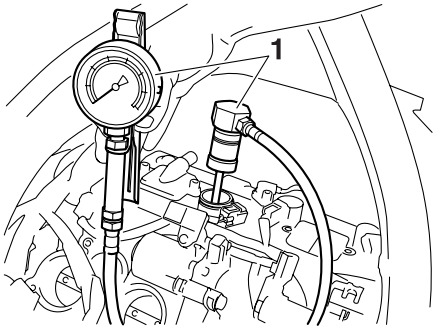

EAS14B1052

ENGINE INSPECTION

EAS14B1053

MEASURING THE COMPRESSION PRESSURE

The following procedure applies to all of the cylinders.

TIP

Insufficient compression pressure will result in a loss of performance.

1. Measure:
   - Valve clearance
     Out of specification → Adjust.
     Refer to "ADJUSTING THE VALVE CLEARANCE" on page 3-5.
2. Start the engine, warm it up for several minutes, and then turn it off.
3. Remove:
   - Fuel tank
     Refer to "FUEL TANK" on page 7-1.
   - Air filter case
     Refer to "AIR FILTER CASE" on page 7-5.
   - Air filter case duct
     Refer to "AIR INDUCTION SYSTEM" on page 7-21.
4. Remove:
   - Ignition coils
   - Spark plugs

ECA13340

NOTICE

Before removing the spark plugs, use compressed air to blow away any dirt accumulated in the spark plug wells to prevent it from falling into the cylinders.

5. Install:
   - Compression gauge "1"

Compression gauge
90890-03081
Engine compression tester
YU-33223

6. Measure:
   - Compression pressure
     Out of specification → Refer to steps (c) and (d).

Standard compression pressure (at sea level)
1480 kPa/350 r/min (14.8 kgf/cm²/350 r/min, 210.5 psi/350 r/min)
Minimum–Maximum
1290–1660 kPa/350 r/min (12.9–16.6 kgf/cm²/350 r/min, 183.5–236.1 psi/350 r/min)

▼▼▼▼▼▼▼▼▼▼▼▼▼▼▼▼▼▼▼▼▼▼▼▼▼▼▼▼▼▼▼▼▼

a. Set the main switch to "ON".
b. With the throttle wide open, crank the engine until the reading on the compression gauge stabilizes.

EWA14B1017

⚠ WARNING

To prevent sparking, ground all speak plug leads before cranking the engine.

TIP

The difference in compression pressure between cylinders should not exceed 100 kPa (1 kgf/cm², 14 psi).

c. If the compression pressure is above the maximum specification, check the cylinder head, valve surfaces and piston crown for carbon deposits.
   Carbon deposits → Eliminate.
d. If the compression pressure is below the minimum specification, pour a teaspoonful of engine oil into the spark plug bore and measure again.
   Refer to the following table.

Compression pressure (with oil applied into the cylinder)	
Reading	Diagnosis
Higher than without oil	Piston ring(s) wear or damage → Replace.
Same as without oil	Piston, valves or cylinder head gasket possibly defective → Replace.

▲▲▲▲▲▲▲▲▲▲▲▲▲▲▲▲▲▲▲▲▲▲▲▲▲▲▲▲▲▲▲▲

7. Install:
   - Spark plugs
   - Ignition coils

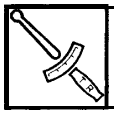

Spark plug
13 Nm (1.3 m·kgf, 9.4 ft·lbf)

8. Install:
   - All removed parts

TIP

For installation, reverse the removal procedure.

EAS23711

ENGINE REMOVAL

Removing the exhaust pipe and muffler

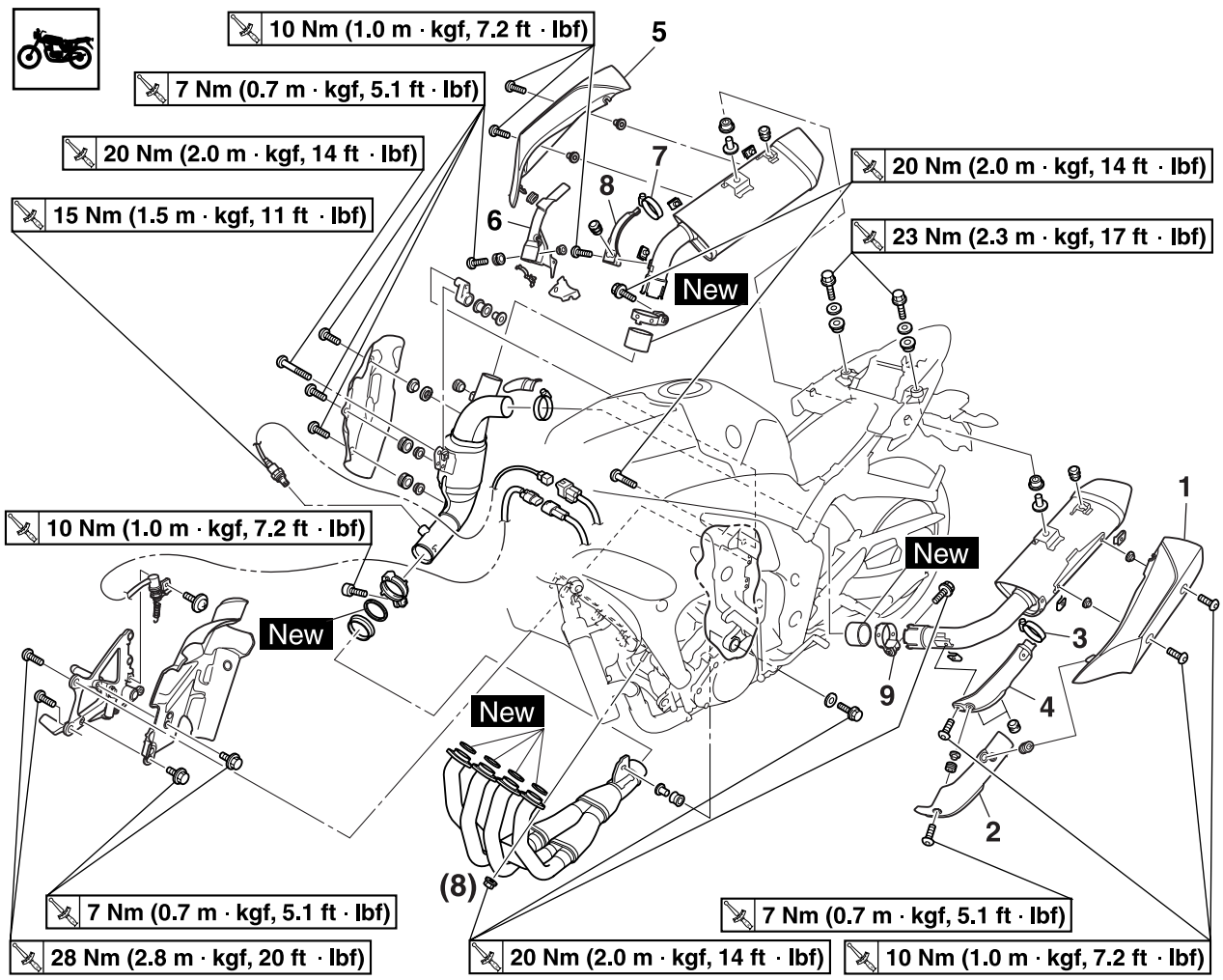

Order	Job/Parts to remove	Q'ty	Remarks
	Rider seat		Refer to "GENERAL CHASSIS" on page 4-1.
	Passenger seat		Refer to "GENERAL CHASSIS" on page 4-1.
	Upper tall cover		Refer to "GENERAL CHASSIS" on page 4-1.
	Side cowling		Refer to "GENERAL CHASSIS" on page 4-1.
	Rear brake master cylinder		Refer to "REAR BRAKE" on page 4-43.
	Radiator lower bracket		Refer to "RADIATOR" on page 6-1.
1	Left muffler cover	1	
2	Left muffler pipe cover	1	
3	Left muffler pipe protector clamp	1	Loosen.
4	Left muffler pipe protector	1	
5	Right muffler cover	1	
6	Right muffler pipe cover	1	
7	Right muffler pipe protector clamp	1	Loosen.
8	Right muffler pipe protector	1	
9	Left muffler clamp	1	Loosen.

Removing the exhaust pipe and muffler

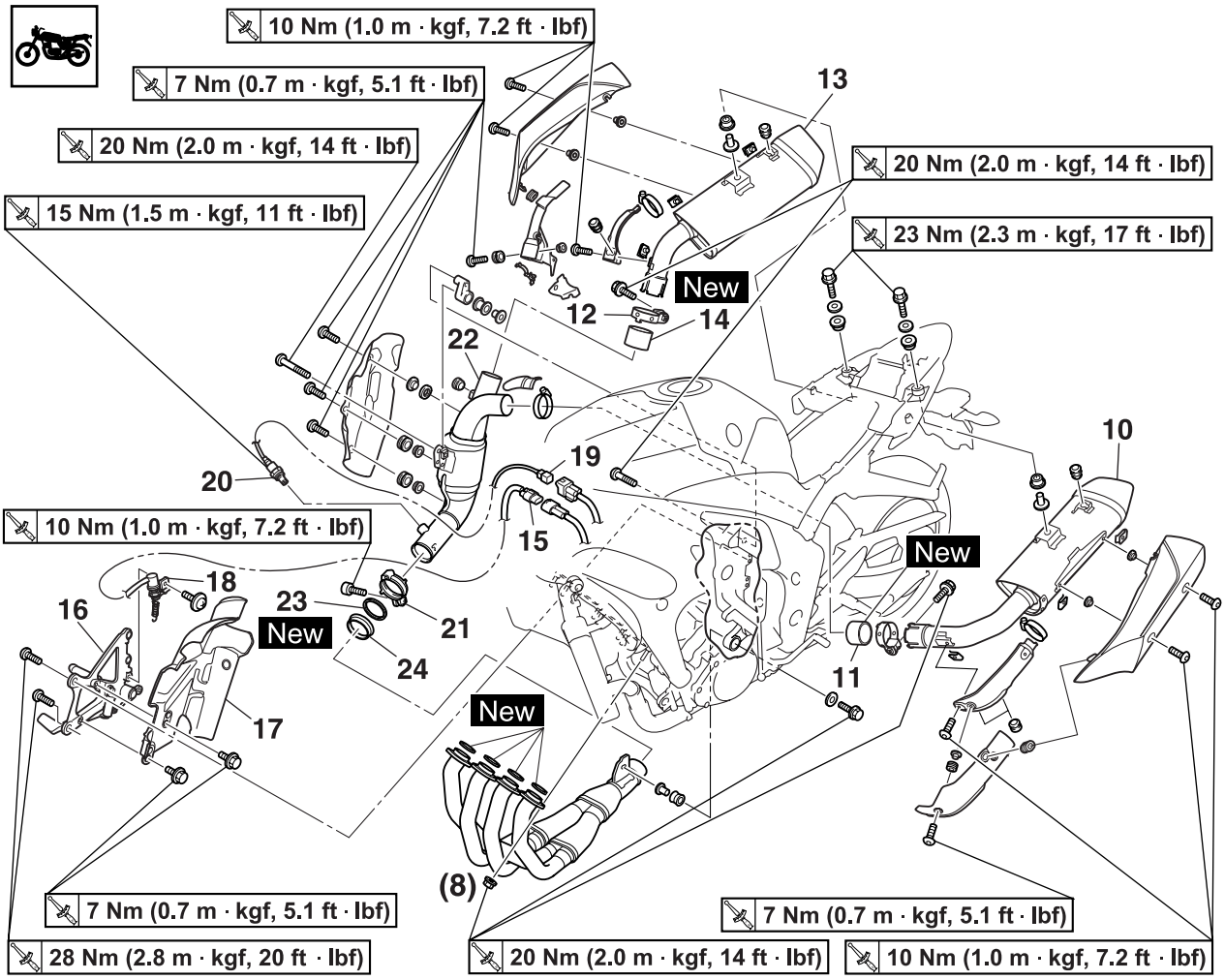

Order	Job/Parts to remove	Q'ty	Remarks
10	Left muffler	1	
11	Left muffler gasket	1	
12	Right muffler clamp	1	Loosen.
13	Right muffler	1	
14	Right muffler gasket	1	
15	Rear brake light switch coupler	1	Disconnect.
16	Right footrest assembly	1	
17	Exhaust chamber cover	1	
18	Rear brake light switch	1	
19	O_2 sensor lead coupler	1	Disconnect.
20	O_2 sensor	1	
21	Exhaust chamber clamp	1	
22	Exhaust chamber	1	
23	Exhaust chamber gasket	1	
24	Collar	1	

Removing the exhaust pipe and muffler

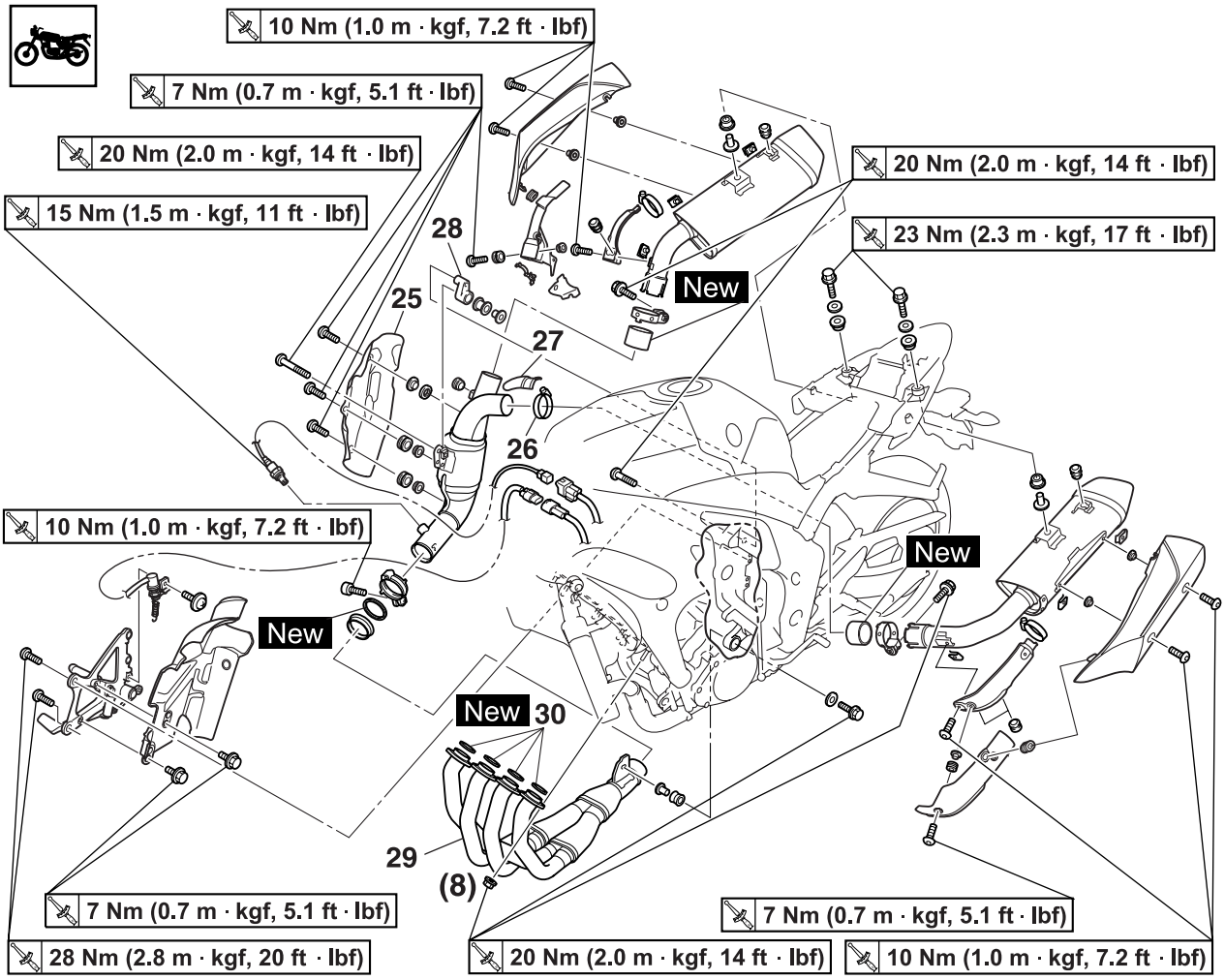

Order	Job/Parts to remove	Q'ty	Remarks
25	Exhaust chamber protector	1	
26	Exhaust chamber pipe protector clamp	1	Loosen.
27	Exhaust chamber pipe protector	1	
28	Exhaust chamber bracket	1	
29	Exhaust pipe	1	
30	Exhaust pipe gasket	4	
			For installation, reverse the removal procedure.

Disconnecting the leads and hoses

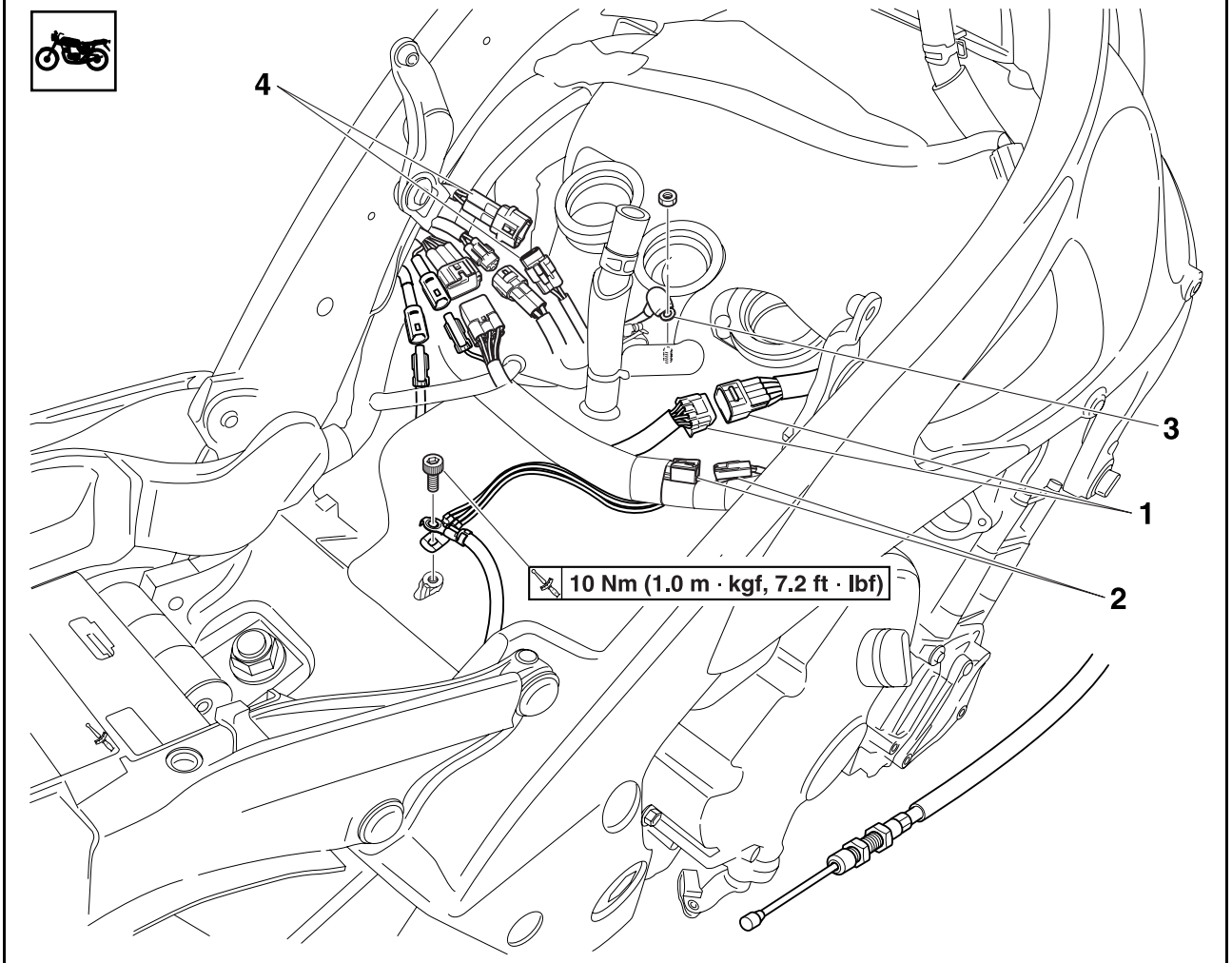

Order	Job/Parts to remove	Q'ty	Remarks
	Battery negative lead		Refer to "GENERAL CHASSIS" on page 4-1.
	Battery positive lead		Refer to "GENERAL CHASSIS" on page 4-1.
	Fuel tank		Refer to "FUEL TANK" on page 7-1.
	Side cowling air duct		Refer to "GENERAL CHASSIS" on page 4-1.
	Lower cowling		Refer to "GENERAL CHASSIS" on page 4-1.
	Air filter case		Refer to "AIR FILTER CASE" on page 7-5.
	Air filter case duct		Refer to "AIR INDUCTION SYSTEM" on page 7-21.
	Radiator		Refer to "RADIATOR" on page 6-1.
	Shift pedal		Refer to "CHAIN DRIVE" on page 4-84.
	Drive sprocket		Refer to "CHAIN DRIVE" on page 4-84.
	Throttle body assembly		Refer to "THROTTLE BODIES" on page 7-11.
1	Sub wire harness coupler	1	Disconnect.
2	Crankshaft position sensor coupler	1	Disconnect.
3	Starter motor lead	1	Disconnect.
4	Sidestand switch lead coupler	1	Disconnect.

Disconnecting the leads and hoses

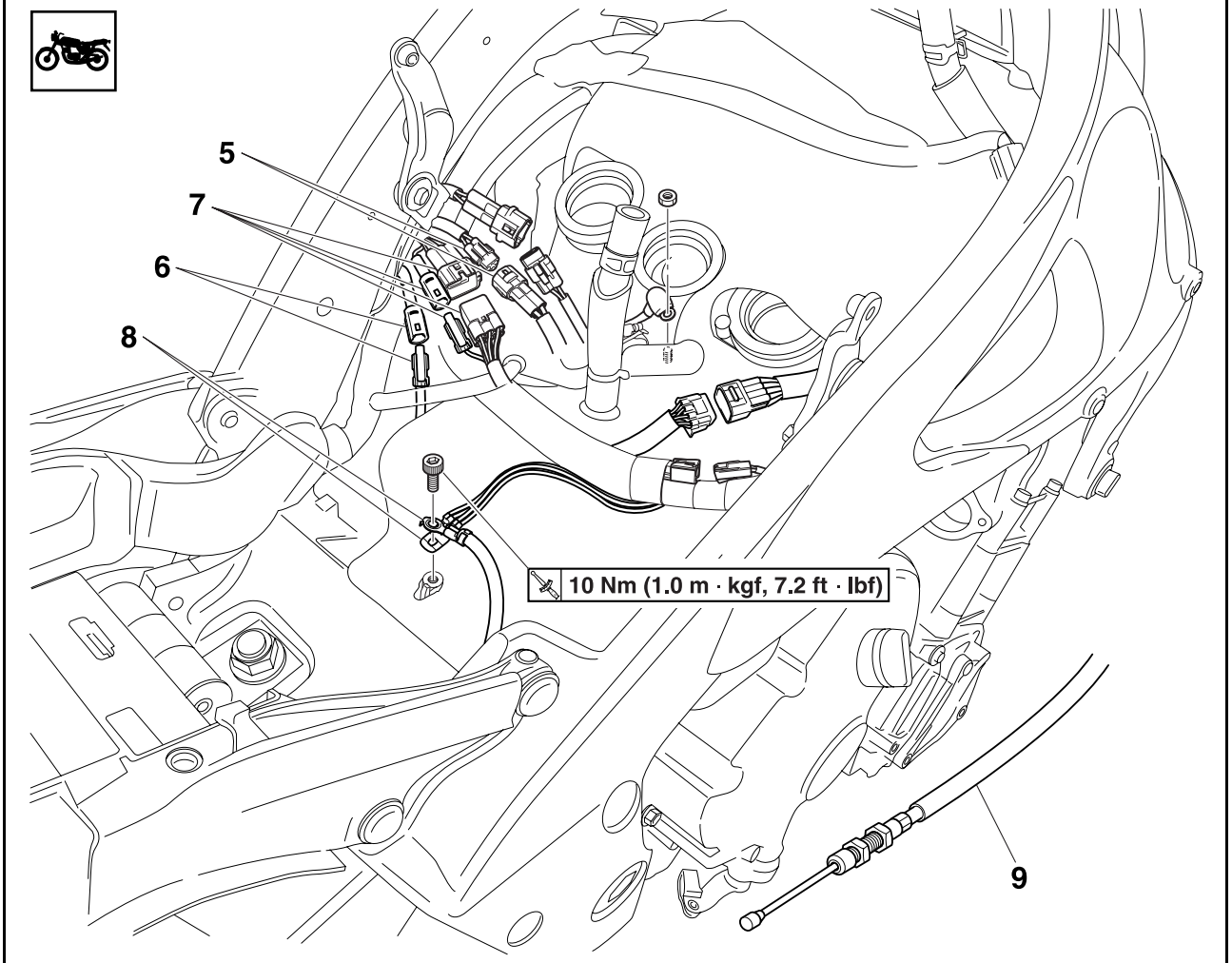

Order	Job/Parts to remove	Q'ty	Remarks
5	Speed sensor lead coupler	1	Disconnect.
6	Oil level switch lead coupler	1	Disconnect.
7	Gear position sensor coupler	2	Disconnect.
8	Engine ground lead	2	Disconnect.
9	Clutch cable	1	Disconnect.
			For installation, reverse the removal procedure.

Removing the engine

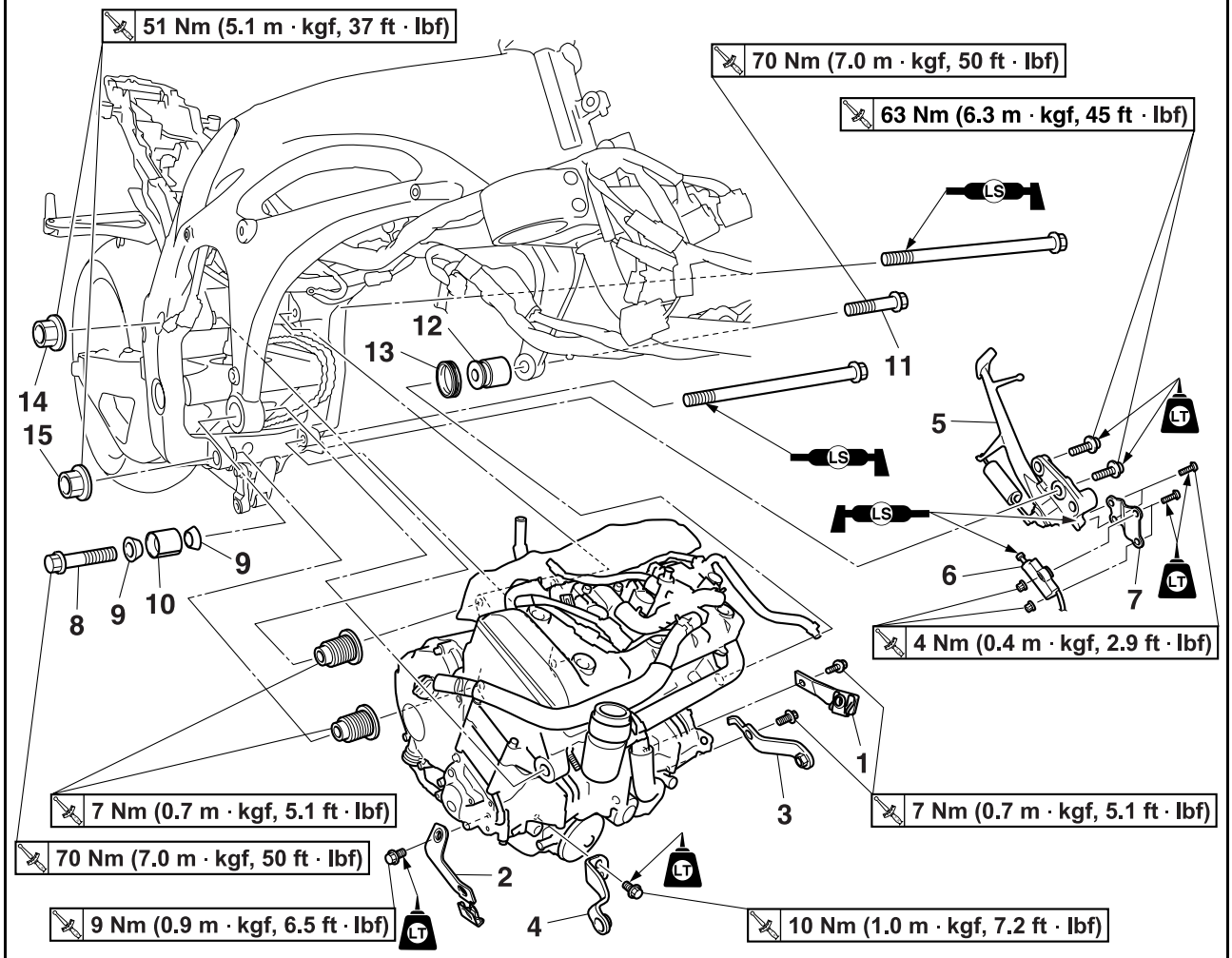

Order	Job/Parts to remove	Q'ty	Remarks
1	Left lower cowling bracket	1	
2	Right lower cowling bracket	1	
3	Left inner panel bracket	1	
4	Right inner panel bracket	1	
5	Sidestand assembly	1	
6	Sidestand switch	1	
7	Sidestand switch bracket	1	
8	Engine mounting bolt (front right side)	1	
9	Engine mount collar (front right side)	2	
10	Engine mount collar (front right side)	1	
11	Engine mounting bolt (front left side)	1	
12	Left engine mount collar	1	
13	Left engine mount damper	1	
14	Engine mount nut (rear upper side)	1	
15	Engine mount nut (rear lower side)	1	

Removing the engine

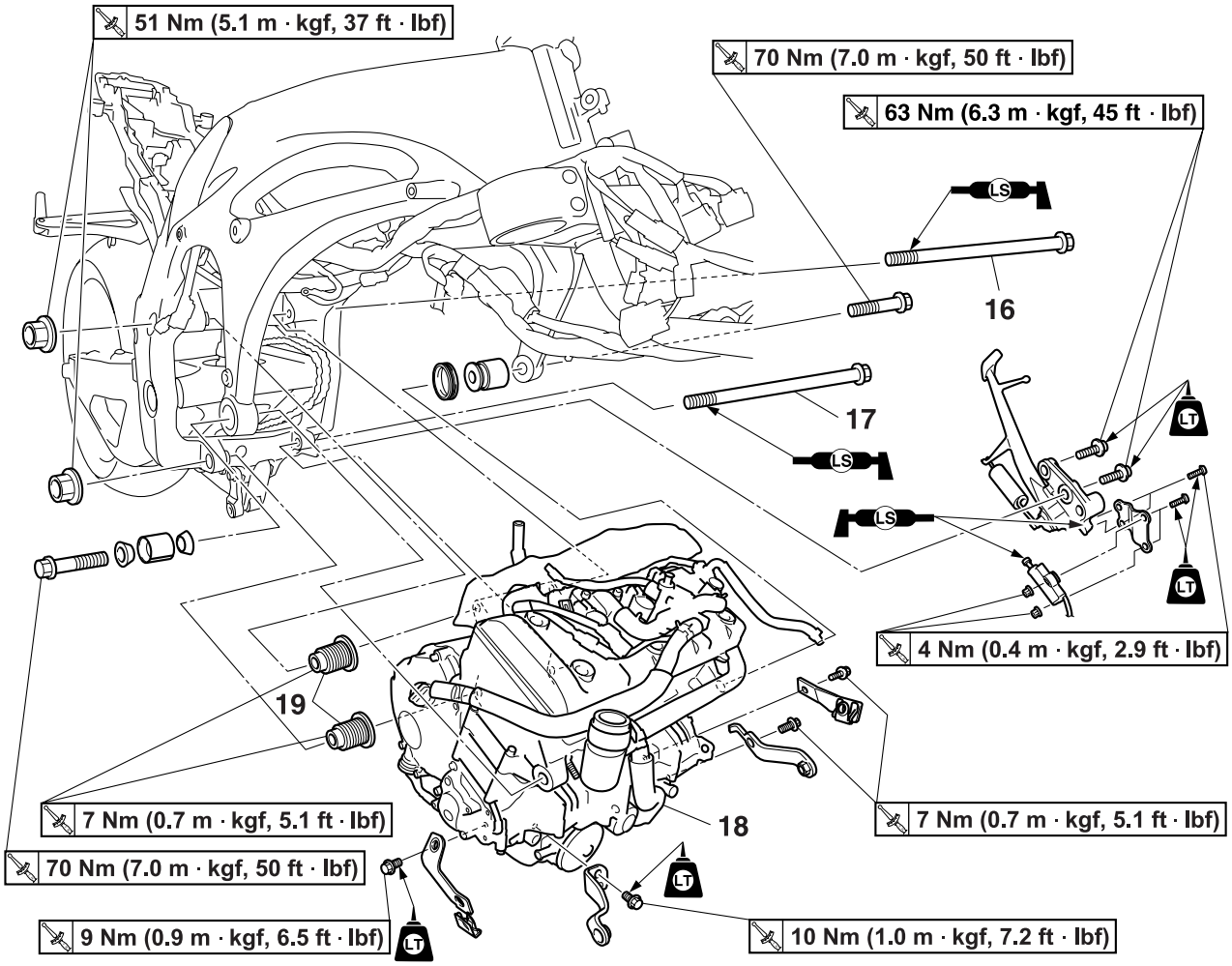

Order	Job/Parts to remove	Q'ty	Remarks
16	Engine mount bolt (rear upper side)	1	
17	Engine mount bolt (rear lower side)	1	
18	Engine	1	
19	Engine mount adjusting bolt	2	
			For installation, reverse the removal procedure.

EAS23720
INSTALLING THE ENGINE
ECA14B1021

NOTICE

Do not hold the radiator inlet hose when removing the engine and moving the engine by itself.

1. Install:
   - Engine mounting adjust bolts (temporary tighten)
2. Install:
   - Engine
3. Install:
   - Engine mounting bolt (rear upper side) “1”
   - Engine mounting bolt (rear lower side) “2”
   - Engine mounting nut (rear upper side)
   - Engine mounting nut (rear lower side)

TIP

Lubricate the upper and lower engine mounting bolts threads with lithium-soap-based grease.

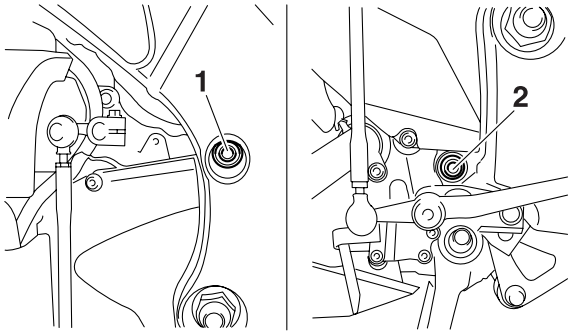

4. Install:
   - Engine mount collar (front left side) “1” (Install together with damper “2”.)
   - Engine mounting bolt (front left side) “3” (temporary tighten)

TIP

When installing the engine mount collar (front left side), set the damper toward the engine.

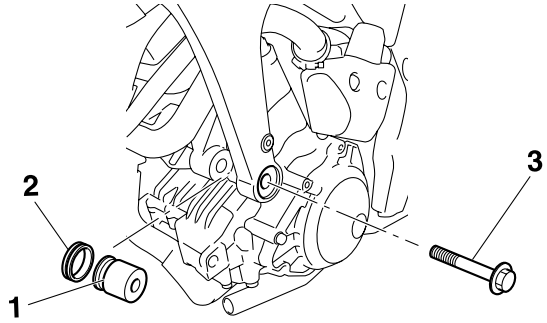

5. Install:
   - Engine mount collars (front right side) “1”
   - Engine mount collar (front right side) “2”
   - Engine mounting bolt (front right side) “3” (temporary tighten)

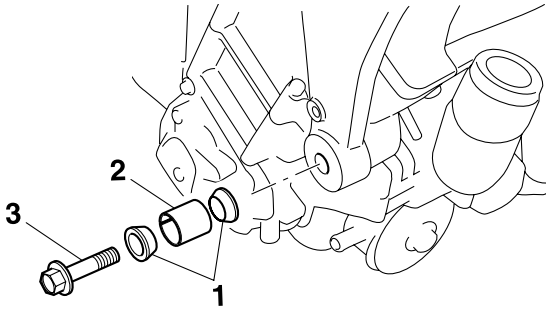

6. Tighten:
   - Engine mount adjusting bolts

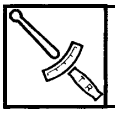	**Engine mount adjusting bolt 7 Nm (0.7 m·kgf, 5.1 ft·lbf)**

TIP

- Use the pivot shaft wrench “1” and pivot shaft wrench adapter “2” to tighten the engine mounting adjust bolts.
- Make sure that surface of the engine and bearing surfaces of the engine mounting adjust bolts are contacting each other.

	**Pivot shaft wrench 90890-01471** **Frame spanner socket YM-01471** **Pivot shaft wrench adapter 90890-01476**

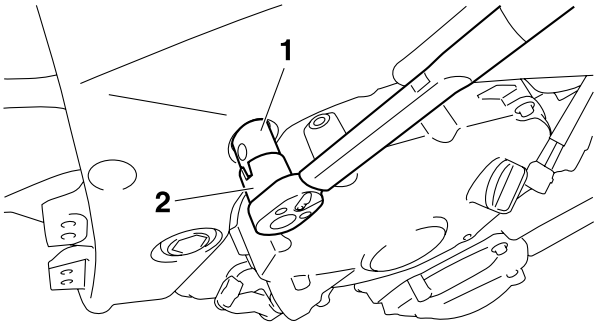

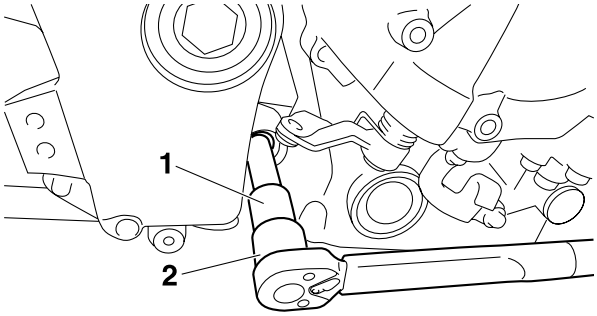

7. Tighten:
   - Engine mounting nut (rear lower side) “1”
   - Engine mounting nut (rear upper side) “2”

Engine mounting nut (rear lower side)
51 Nm (5.1 m·kgf, 37 ft·lbf)
Engine mounting nut (rear upper side)
51 Nm (5.1 m·kgf, 37 ft·lbf)

TIP
First tighten the engine mounting nut (rear lower side), and then tighten the engine mounting nut (rear upper side).

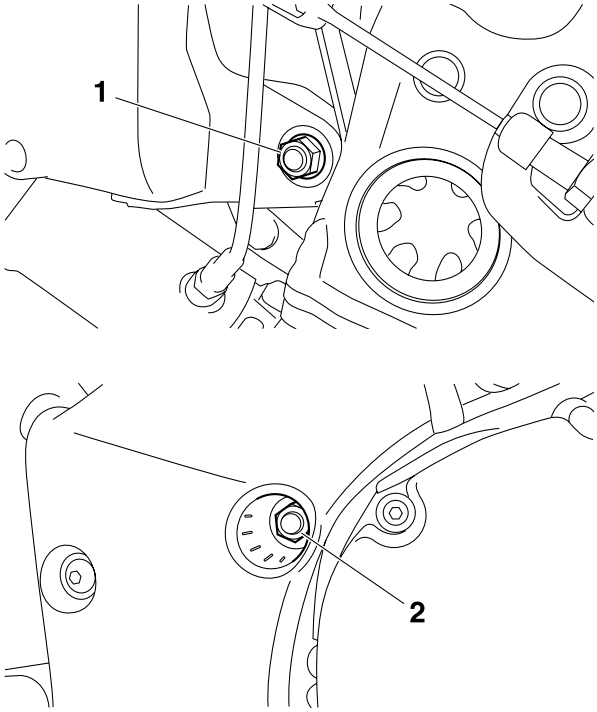

8. Tighten:
   - Engine mounting bolt (front left side) “1”

Engine mounting bolt (front left side)
70 Nm (7.0 m·kgf, 50 ft·lbf)

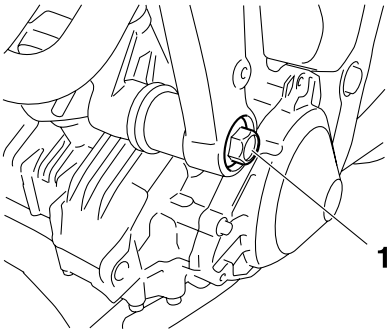

9. Tighten:
   - Engine mounting bolt (front right side) “1”

Engine mounting bolt (front right side)
70 Nm (7.0 m·kgf, 50 ft·lbf)

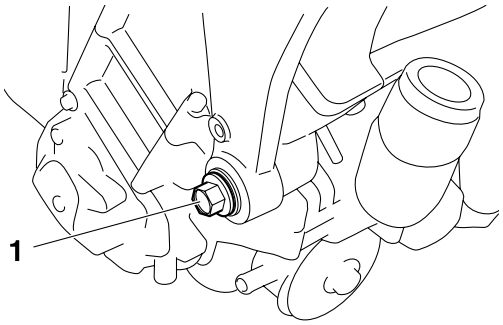

EAS14B1014
INSTALLING THE EXHAUST PIPE AND MUFFLER

1. Install:
   - Right footrest assembly
     Refer to “ADJUSTING THE RIDER FOOTRESTS” on page 4-16.
2. Install:
   - Muffler gasket “1” New
     (to muffler)
   - Muffler

TIP
- When installing the muffler gasket, set the surface “a” with the carbon to the back.
- When installing the catalyst pipe assembly and muffler clamp, tip of the tab “b” should not contact the edge of the muffler gasket.

Installed depth of gasket “c”
3.5 mm (0.14 in)

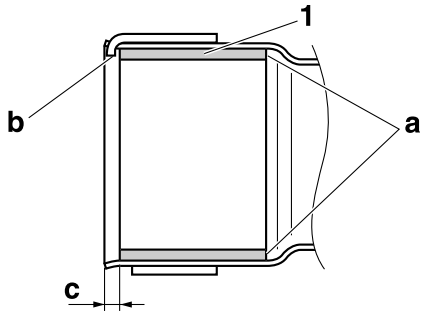

EAS23760
CAMSHAFTS

Removing the cylinder head cover

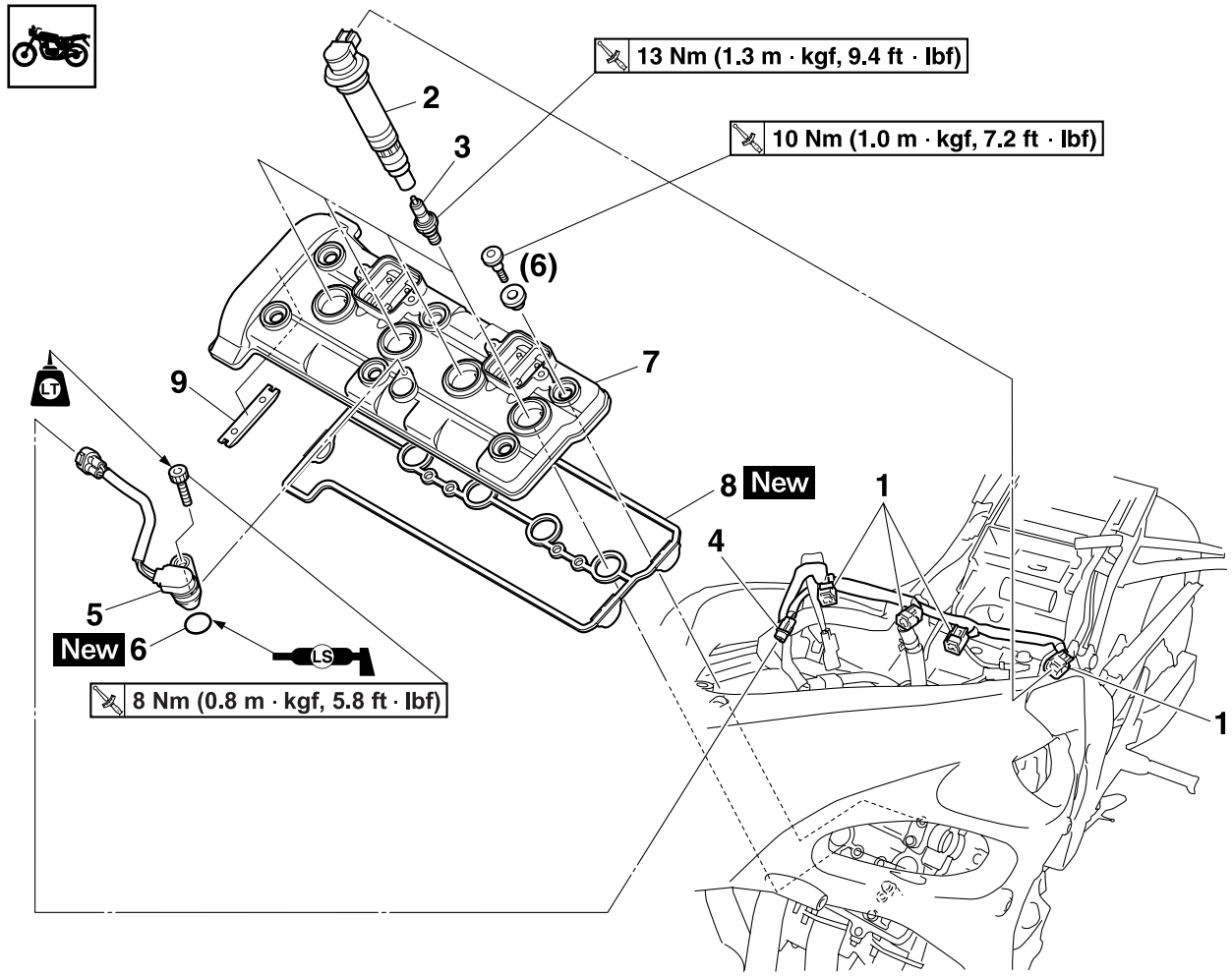

Order	Job/Parts to remove	Q'ty	Remarks
	Fuel tank		Refer to "FUEL TANK" on page 7-1.
	Air filter case		Refer to "AIR FILTER CASE" on page 7-5.
	Side cowling		Refer to "GENERAL CHASSIS" on page 4-1.
	Radiator		Refer to "RADIATOR" on page 6-1.
	Reed valve assembly		Refer to "AIR INDUCTION SYSTEM" on page 7-21.
	Throttle body		Refer to "THROTTLE BODIES" on page 7-11.
	Air filter case duct		Refer to "AIR INDUCTION SYSTEM" on page 7-21.
1	Ignition coil coupler	4	Disconnect.
2	Ignition coil	4	
3	Spark plug	4	
4	Cylinder identification sensor coupler	1	Disconnect.
5	Cylinder identification sensor	1	
6	O-ring	1	
7	Cylinder head cover	1	
8	Cylinder head cover gasket	1	
9	Timing chain guide (Top side)	1	

Removing the cylinder head cover

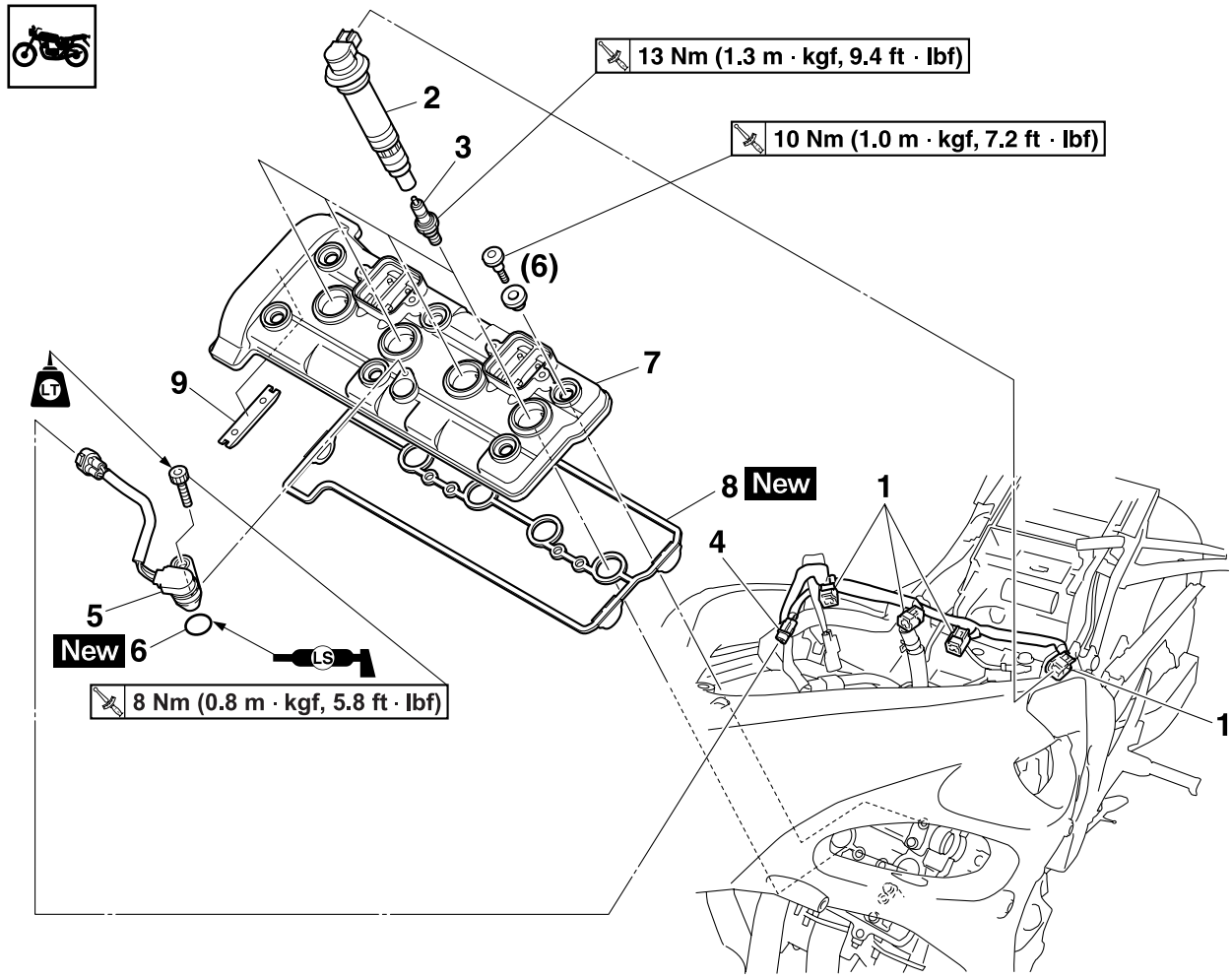

Order	Job/Parts to remove	Q'ty	Remarks
			For installation, reverse the removal procedure.

Removing the camshafts

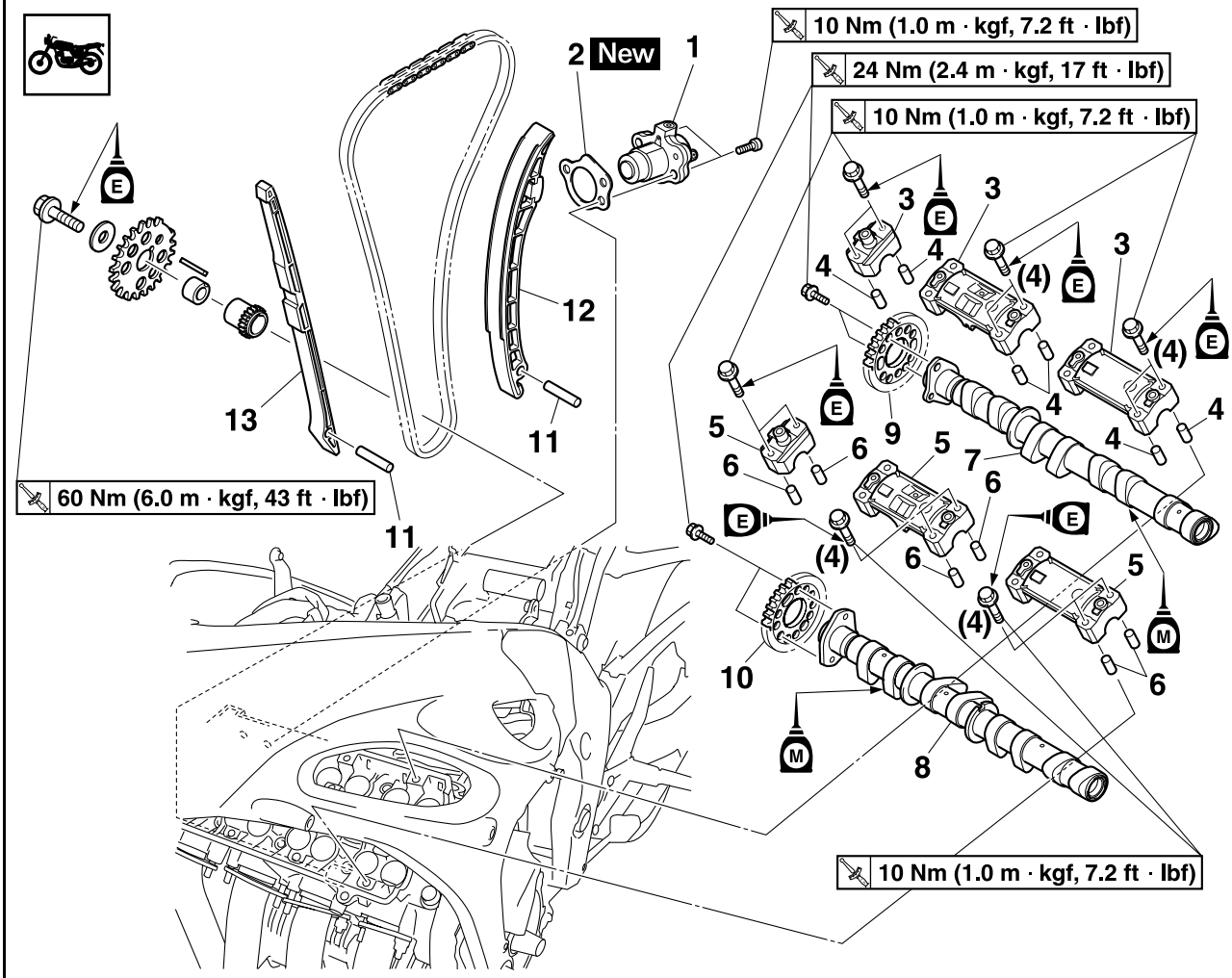

Order	Job/Parts to remove	Q'ty	Remarks
	Pickup coil cover 2		Refer to "PICKUP ROTOR" on page 5-43.
	Generator cover		Refer to "GENERATOR" on page 5-37.
1	Timing chain tensioner	1	
2	Timing chain tensioner gasket	1	
3	Intake camshaft cap	3	
4	Dowel pin	6	
5	Exhaust camshaft cap	3	
6	Dowel pin	6	
7	Intake camshaft	1	
8	Exhaust camshaft	1	
9	Intake camshaft sprocket	1	
10	Exhaust camshaft sprocket	1	
11	Dowel pin	2	
12	Intake side timing chain guide	1	
13	Exhaust side timing chain guide	1	

Removing the camshafts

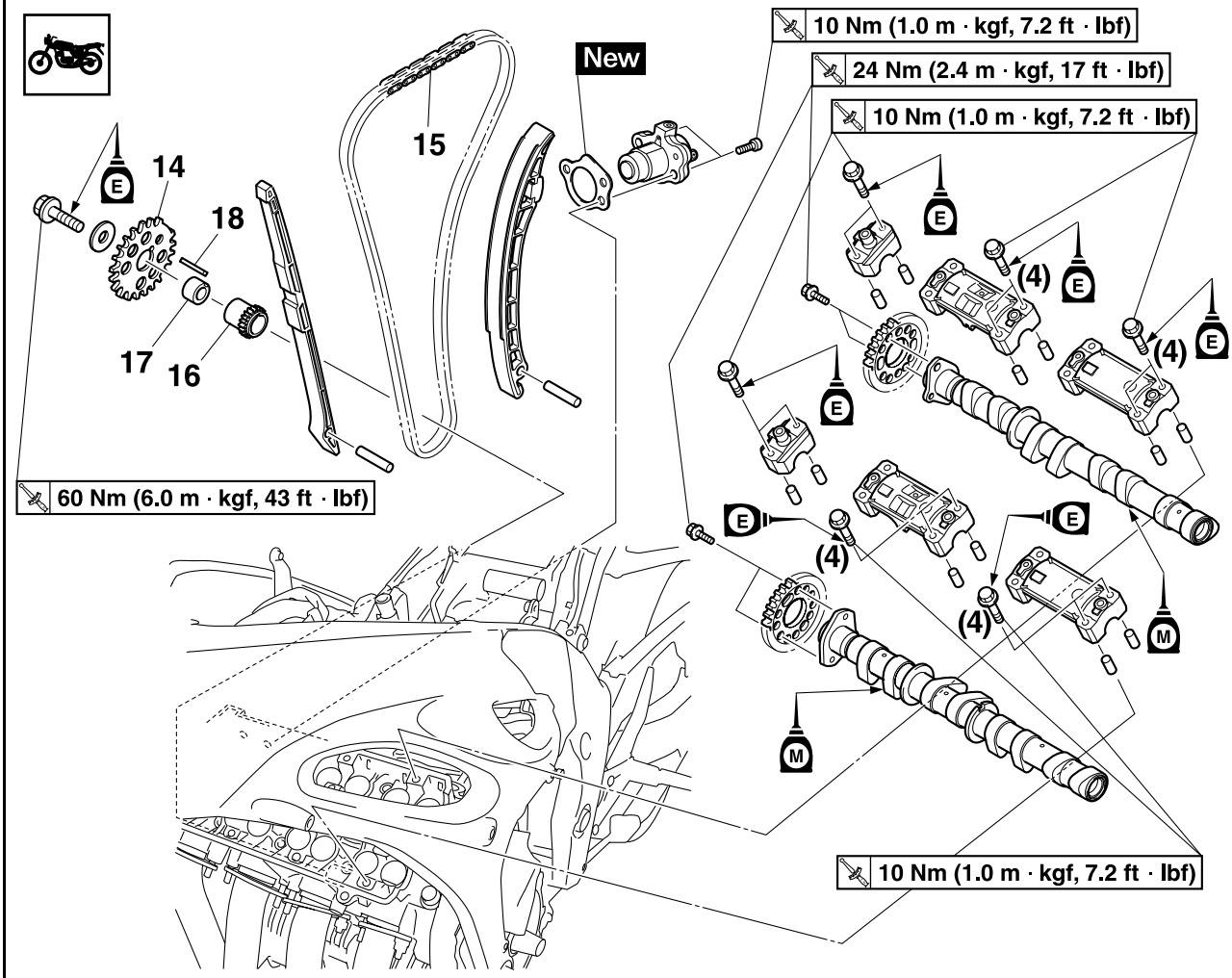

Order	Job/Parts to remove	Q'ty	Remarks
14	Pickup rotor	1	Refer to "PICKUP ROTOR" on page 5-43.
15	Timing chain	1	
16	Crankshaft sprocket	1	
17	Collar	1	
18	Woodruff key	1	
			For installation, reverse the removal procedure.

EAS23810
REMOVING THE CAMSHAFTS

1. Remove:
   - Pickup rotor cover 2
     Refer to “PICKUP ROTOR” on page 5-43.
   - Generator cover
     Refer to “GENERATOR” on page 5-37.
2. Align:
   - “K” mark “a” on the pickup rotor
     (with the crankcase mating surface “b”)

ECA14B1034

NOTICE

When turning the crankshaft with a tool, remove all the spark plugs.

▼▼▼▼▼▼▼▼▼▼▼▼▼▼▼▼▼▼▼▼▼▼▼▼▼▼▼▼▼▼▼▼

a. Turn the crankshaft clockwise.
b. When piston #1 is at BTDC 105° on the compression stroke, align the “K” mark “a” on the pickup rotor with the crankcase mating surface “b”.

TIP

You can check that the #1 piston is at BTDC 105° by checking to see that the intake camshaft sprocket air intake timing mark “c” and exhaust camshaft sprocket air exhaust timing mark “d” are aligned with the cylinder head surface “e”.

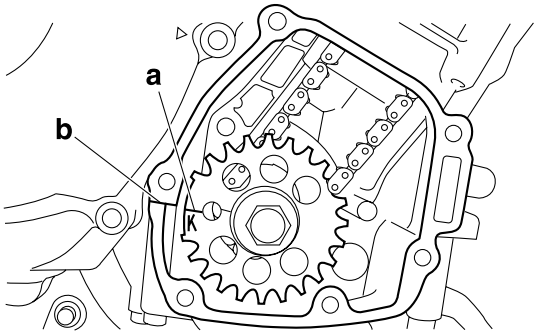

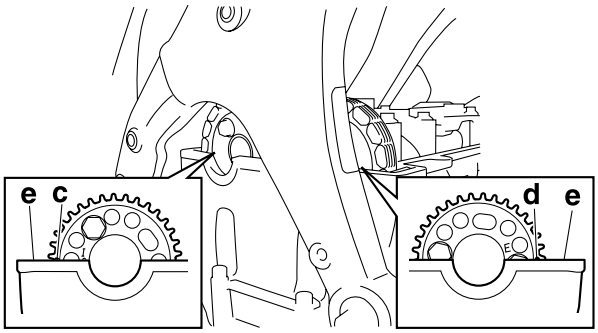

▲▲▲▲▲▲▲▲▲▲▲▲▲▲▲▲▲▲▲▲▲▲▲▲▲▲▲▲▲▲▲▲

3. Remove:
   - Timing chain tensioner “1”
   - Gasket

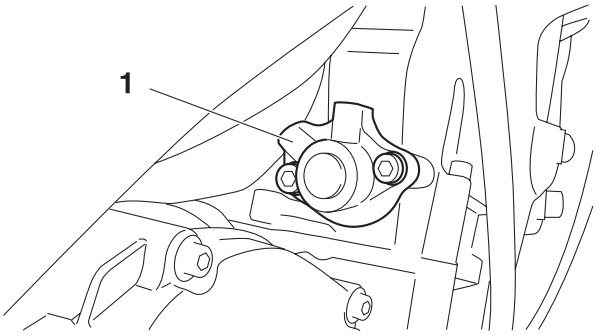

4. Remove:
   - Camshaft caps “1”
   - Dowel pins

ECA13720

NOTICE

To prevent damage to the cylinder head, camshafts or camshaft caps, loosen the camshaft cap bolts in stages and in a criss-cross pattern, working from the outside in.

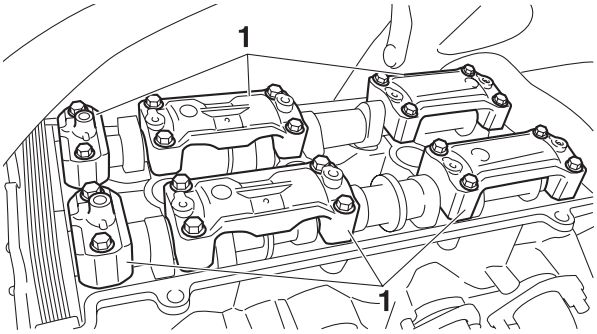

5. Remove:
   - Intake camshaft “1”
   - Exhaust camshaft “2”

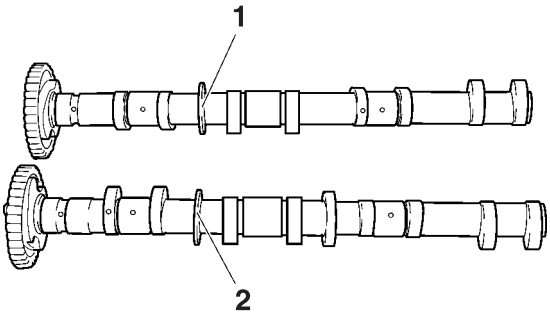

6. Remove:
   - Camshaft sprocket “1”

TIP
Use the camshaft wrench “2” and loosen the camshaft sprocket bolt.

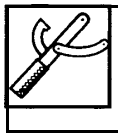

Camshaft wrench
90890-04143
YM-04143

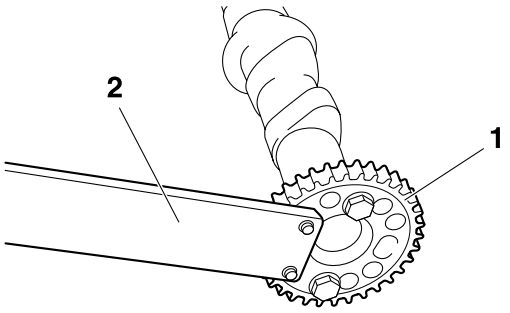

7. Remove:
   - Dowel pins
   - Timing chain guide (intake side)
   - Timing chain guide (exhaust side)
8. Remove:
   - Pickup rotor
   Refer to “PICKUP ROTOR” on page 5-43.
   - Timing chain
   - Crankshaft sprocket “1”
   - Collar “2”
   - Woodruff key “3”

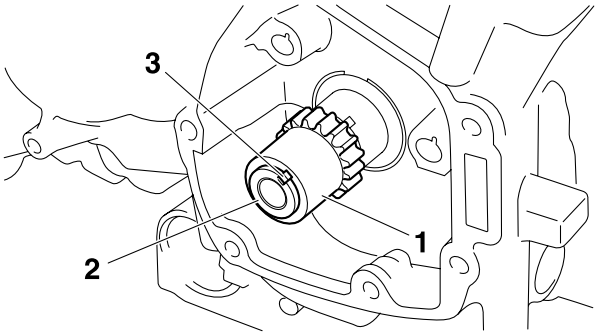

EAS23850
CHECKING THE CAMSHAFTS

1. Check:
   - Camshaft lobes
   Blue discoloration/pitting/scratches → Replace the camshaft.
2. Measure:
   - Camshaft lobe dimensions “a” and “b”
   Out of specification → Replace the camshaft.

Camshaft lobe dimension limit
Intake A
37.350–37.450 mm (1.4705–1.4744 in)
Limit
37.250 mm (1.4665 in)
Intake B
28.034–28.134 mm (1.1037–1.1076 in)
Limit
27.934 mm (1.0998 in)
Exhaust A
36.450–36.550 mm (1.4350–1.4390 in)
Limit
36.350 mm (1.4311 in)
Exhaust B
28.006–28.106 mm (1.1026–1.1065 in)
Limit
27.906 mm (1.0987 in)

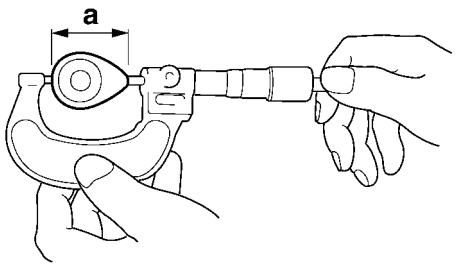

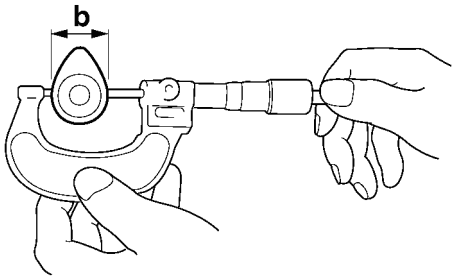

3. Measure:
   - Camshaft runout
   Out of specification → Replace.

Camshaft runout limit
0.030 mm (0.0012 in)

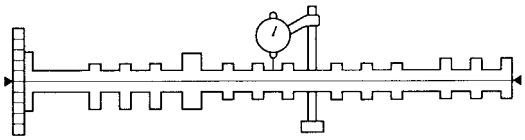

4. Measure:
   - Camshaft-journal-to-camshaft-cap clearance
     Out of specification → Measure the camshaft journal diameter.

Camshaft-journal-to-camshaft-cap clearance
0.028–0.062 mm (0.0011–0.0024 in)

▼▼▼▼▼▼▼▼▼▼▼▼▼▼▼▼▼▼▼▼▼▼▼▼▼▼▼▼▼▼▼▼

a. Install the camshaft into the cylinder head (without the dowel pins and camshaft caps).
b. Position strip of Plastigauge® “1” onto the camshaft journal as shown.

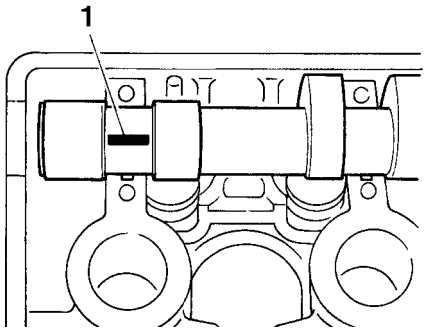

c. Install the dowel pins and camshaft caps.

TIP
- Tighten the camshaft cap bolts in stages and in a crisscross pattern, working from the inner caps out.
- Do not turn the camshaft when measuring the camshaft journal-to-camshaft cap clearance with the Plastigauge®.

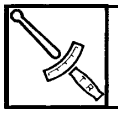

Camshaft cap bolt
10 Nm (1.0 m·kgf, 7.2 ft·lbf)

d. Remove the camshaft caps and then measure the width of the Plastigauge® “2”.

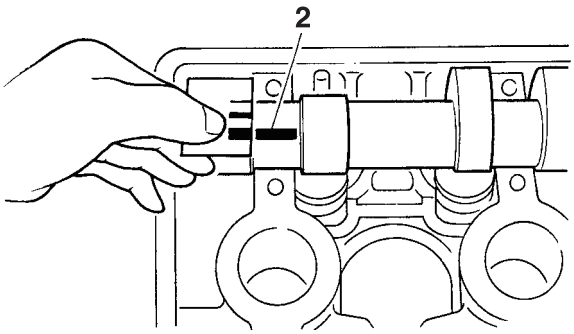

▲▲▲▲▲▲▲▲▲▲▲▲▲▲▲▲▲▲▲▲▲▲▲▲▲▲▲▲▲▲▲▲

5. Measure:
   - Camshaft journal diameter “a”
     Out of specification → Replace the camshaft.
     Within specification → Replace the cylinder head and the camshaft caps as a set.

Camshaft journal diameter
25.459–25.472 mm (1.0023–1.0028 in)

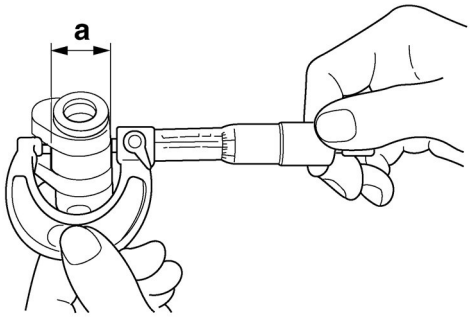

EAS23870
CHECKING THE TIMING CHAIN AND SPROCKET

1. Check:
   - Timing chain
     Damage/stiffness → Replace the timing chain, camshaft sprockets and crankshaft sprocket as a set.
2. Check:
   - Camshaft sprocket
   - Crankshaft sprocket
     More than 1/4 tooth wear “a” → Replace the camshaft sprockets, crankshaft sprocket and timing chain as a set.

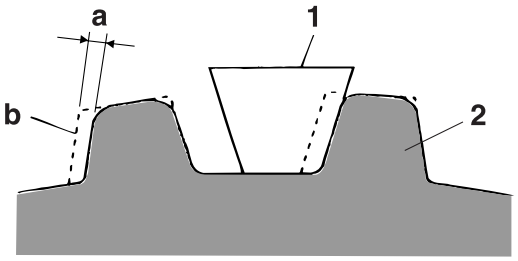

a. 1/4 tooth
b. Correct

1. Timing chain
2. Camshaft sprocket or crankshaft sprocket

EAS23950
CHECKING THE TIMING CHAIN GUIDES

1. Check:
   - Timing chain guide (exhaust side) “1”
   - Timing chain guide (intake side) “2”
   - Timing chain guide (top side) “3”
     Damage/wear → Replace the defective part(s).

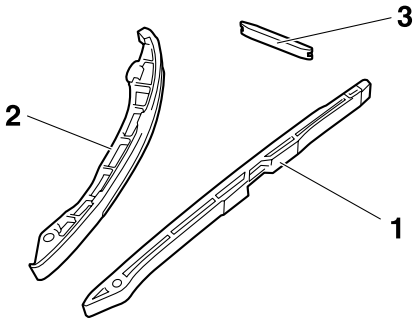

EAS23960
CHECKING THE TIMING CHAIN TENSIONER

1. Check:
   - Timing chain tensioner
     Cracks/damage → Replace.

▼▼▼▼▼▼▼▼▼▼▼▼▼▼▼▼▼▼▼▼▼▼▼▼▼▼▼▼▼▼▼▼▼▼

a. Using a finger, push and insert timing chain tensioner rod “1” into the timing chain tensioner housing.

TIP

Push the timing chain tensioner rod in direction “a”, and turn the timing chain tensioner body “2” in direction “b” until it stops.

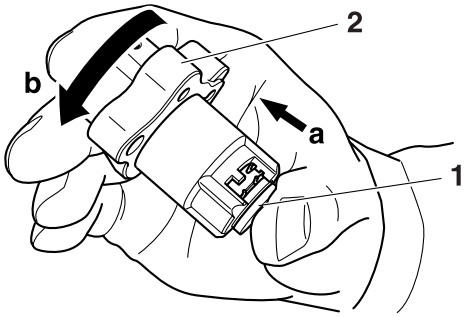

b. Keep pressing the timing chain tensioner rod, mount clip “3” into groove “4”, and lock the timing chain tensioner rod.
c. Push the timing chain tensioner rod in direction “c”.
d. Make sure that the timing chain tensioner rod can smoothly move out from the timing chain tensioner housing in direction “d”. If not smooth, replace the timing chain tensioner assembly.

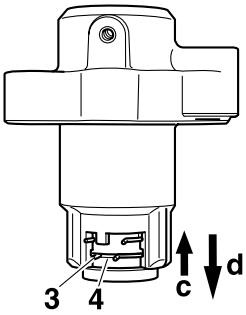

▲▲▲▲▲▲▲▲▲▲▲▲▲▲▲▲▲▲▲▲▲▲▲▲▲▲▲▲▲▲▲▲▲▲

EAS24000
INSTALLING THE CAMSHAFTS

1. Install:
   - Woodruff key “1”
   - Collar “2”
   - Crankshaft sprocket “3”
   - Timing chain

TIP

- Align the woodruff key to the crankshaft groove “a”, collar and crankshaft sprocket groove “b” to the woodruff key and then install.
- To prevent the timing chain from falling into the crankcase, fasten it with a wire “4”.

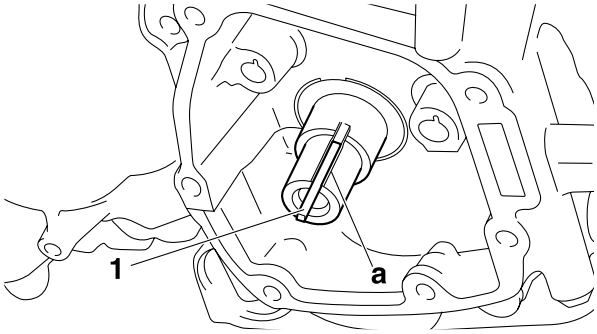

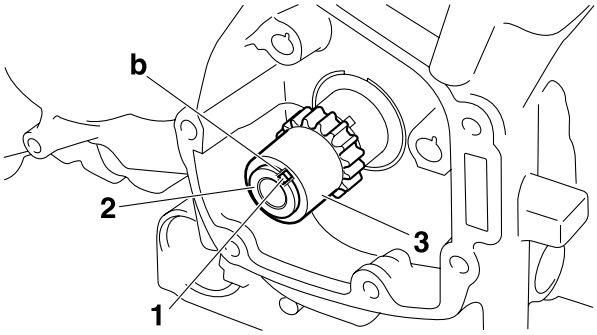

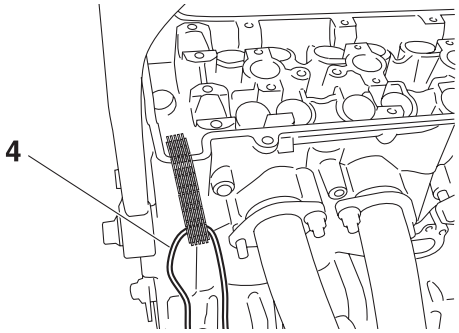

2. Install:
   - Pickup rotor
     Refer to “PICKUP ROTOR” on page 5-43.

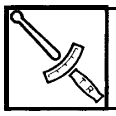	**Pickup rotor bolt** **60 Nm (6.0 m·kgf, 43 ft·lbf)**

3. Install:
   - Timing chain guide (exhaust side)
   - Timing chain guide (intake side)
   - Dowel pins
4. Align:
   - “K” mark “a” on the pickup rotor
     (with the crankcase mating surface “b”)

ECA14B1034

NOTICE

When turning the crankshaft with a tool, remove all the spark plugs.

▼▼▼▼▼▼▼▼▼▼▼▼▼▼▼▼▼▼▼▼▼▼▼▼▼▼▼▼▼▼▼▼

a. Turn the crankshaft clockwise.

b. When position #1 is at BTDC 105°, align the “K” mark “a” with the crankcase mating surface “b”.

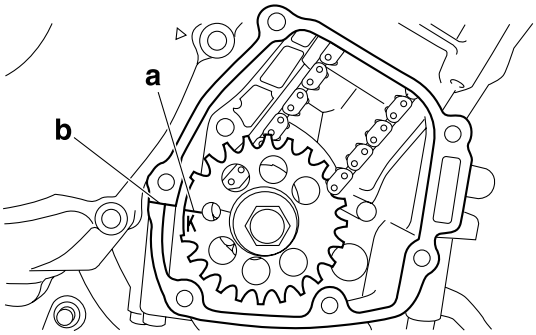

▲▲▲▲▲▲▲▲▲▲▲▲▲▲▲▲▲▲▲▲▲▲▲▲▲▲▲▲▲▲▲▲

5. Install:
   - Intake camshaft sprocket “1”
   - Exhaust camshaft sprocket “2”

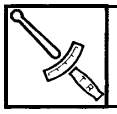	**Camshaft sprocket bolt** **24 Nm (2.4 m·kgf, 17 ft·lbf)**

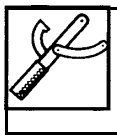	**Camshaft wrench** **90890-04143** **YM-04143**

ECA14B1012

NOTICE

Be sure to tighten the camshaft sprocket bolts to the specified torque to avoid the possibility of the bolts coming loose and damaging the engine.

TIP

- Install the camshaft projection “a” at the position shown in the illustration.
- Tighten the camshaft sprocket bolt with the camshaft wrench “3”.

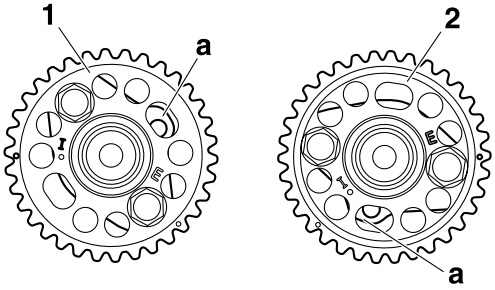

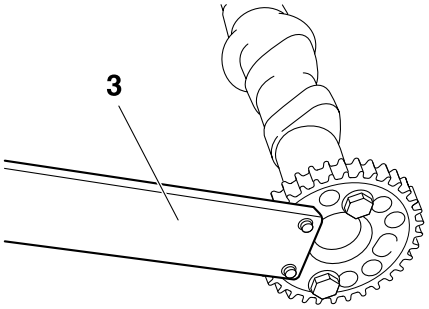

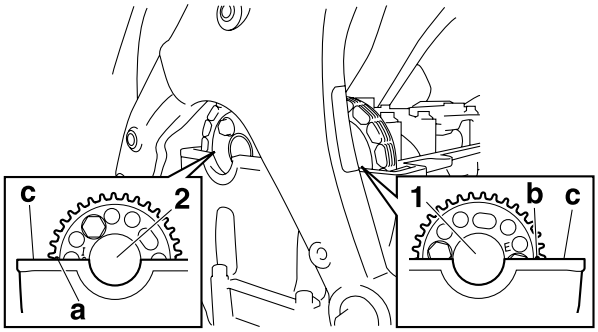

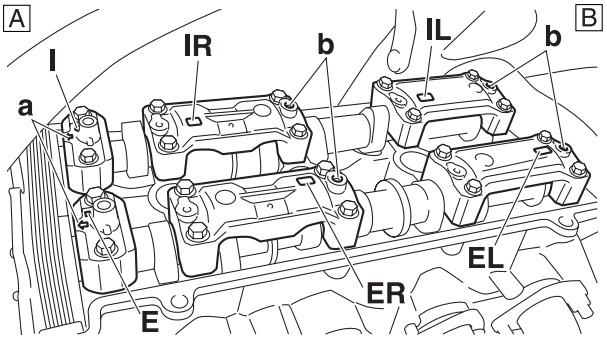

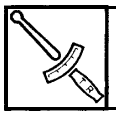

6. Install:
   - Exhaust camshaft “1”
   - Intake camshafts “2”

TIP

- Hang the timing chain on the sprocket from the exhaust camshaft to the intake camshaft, and then put it on the cylinder head.
- The intake camshaft sprocket air intake timing mark “a” and exhaust camshaft sprocket air exhaust timing mark “b” should align with the cylinder head surface “c”.
- The timing chain (exhaust side) should be stretched and the timing chain (intake side) should be sagged.

7. Install:
   - Dowel pins
   - Intake camshaft caps
   - Exhaust camshaft caps

TIP

- Make sure each camshaft cap is installed in its original place. Refer to the identification marks as follows:
  “I”: Intake side camshaft cap mark
  “E”: Exhaust side camshaft cap mark
  “IL”: Intake left side camshaft cap mark
  “IR”: Intake right side camshaft cap mark
  “EL”: Exhaust left side camshaft cap mark
  “ER”: Exhaust right side camshaft cap mark
- Make sure the arrow mark “a” on each camshaft points towards the right side of the engine.
- When installing the camshaft cap, face the hole with the screw thread “b” on the camshaft cap to the left side of the engine.

A. Right side
B. Left side

8. Install:
   - Camshaft cap bolts

Camshaft cap bolt
10 Nm (1.0 m·kgf, 7.2 ft·lbf)

ECA14B1011

NOTICE

- **Lubricate the camshaft cap bolts with the engine oil.**
- **The camshaft cap bolts must be tightened evenly or damage to the cylinder head, camshaft caps, and camshafts will result.**
- **Do not turn the crankshaft when installing the camshaft to avoid damage or improper valve timing.**

TIP

Tighten the camshaft cap bolts in stages and in a crisscross pattern, working from the inner caps out.

9. Install:
   - Timing chain tensioner

▼▼▼▼▼▼▼▼▼▼▼▼▼▼▼▼▼▼▼▼▼▼▼▼▼▼▼▼▼▼▼▼▼

a. Using a hand press, push and insert timing chain tensioner rod “1” into the timing chain tensioner housing.

TIP

Push the timing chain tensioner rod in direction “a”, and turn the timing chain tensioner body “2” in direction “b” until it stops.

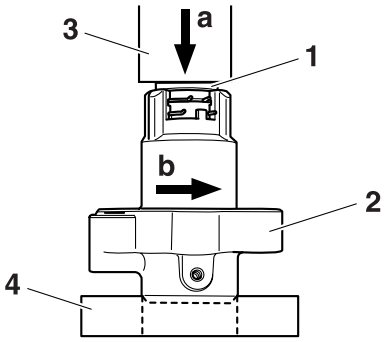

3. Hand press
4. Bearing

b. Keep pressing the timing chain tensioner rod, mount clip “5” into groove “6”, and lock the timing chain tensioner rod.

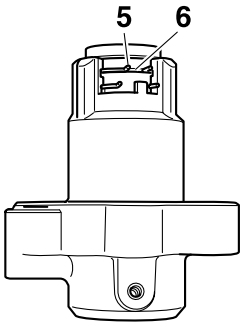

c. In the status of step “b”, install the rod assembly in the cylinder block.

TIP

Always use a new gasket.

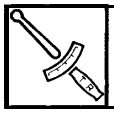	**Timing chain tensioner bolt 10 Nm (1.0 m·kgf, 7.2 ft·lbf)**

d. Unlock the timing chain tensioner by turning the crankshaft counterclockwise, and tension the timing chain.

▲▲▲▲▲▲▲▲▲▲▲▲▲▲▲▲▲▲▲▲▲▲▲▲▲▲▲▲▲▲▲▲

10. Turn:
    - Crankshaft
      (several turns clockwise)

ECA14B1034

NOTICE

When turning the crankshaft with a tool, remove all the spark plugs.

11. Check:
    - “K” mark “a”
      Make sure the “K” mark on the pickup rotor is aligned with the crankcase mating surface “b”.
    - Camshaft sprocket timing mark “c”
      Make sure the punch mark “c” on the camshaft sprocket is aligned with the cylinder head mating surface “d”.
      Out of alignment → Adjust.
      Refer to the installation steps above.

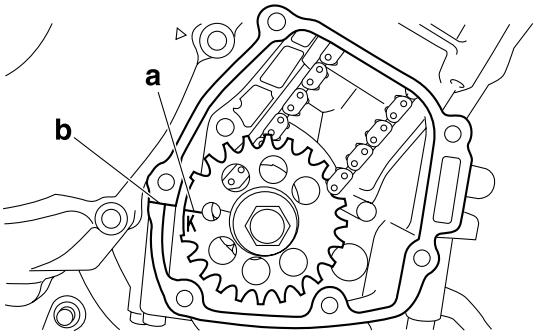

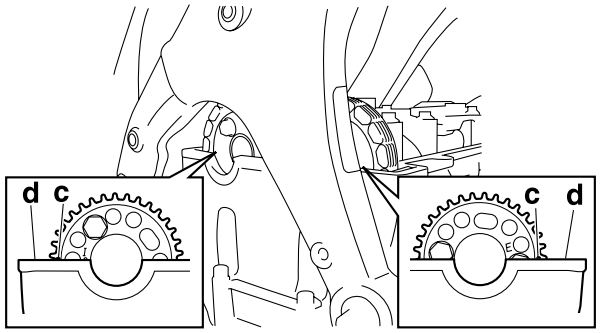

12. Measure:
    - Valve clearance
      Out of specification → Adjust.
      Refer to “ADJUSTING THE VALVE CLEARANCE” on page 3-5.
13. Install:
    - Pickup coil rotor cover 2
      Refer to “PICKUP ROTOR” on page 5-43.
14. Install:
    - Cylinder head cover gasket New
    - Cylinder head cover

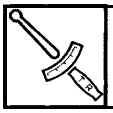	**Cylinder head cover bolt 10 Nm (1.0 m·kgf, 7.2 ft·lbf)**

TIP

- Apply bond TB1541C® “1” onto the mating surfaces of the cylinder head cover and cylinder head cover gasket.
- Apply bond Yamaha bond No.1215 (Three bond No.1215® “2” onto the mating surfaces of the cylinder head cover gasket and cylinder head.

- Tighten the cylinder head cover bolts stages and in a crisscross pattern.

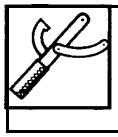

Yamaha bond No.1215
(Three Bond No.1215®)
90890-85505

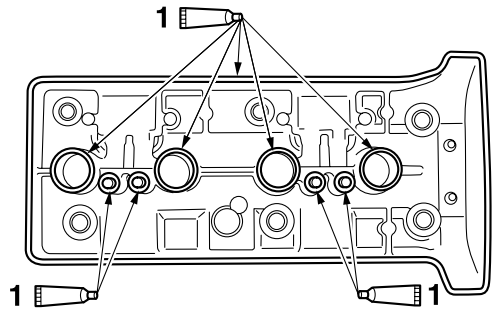

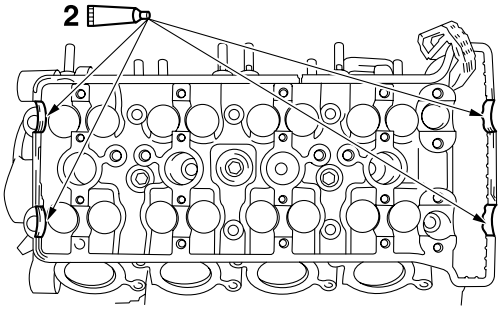

EAS24100

CYLINDER HEAD

Removing the cylinder head

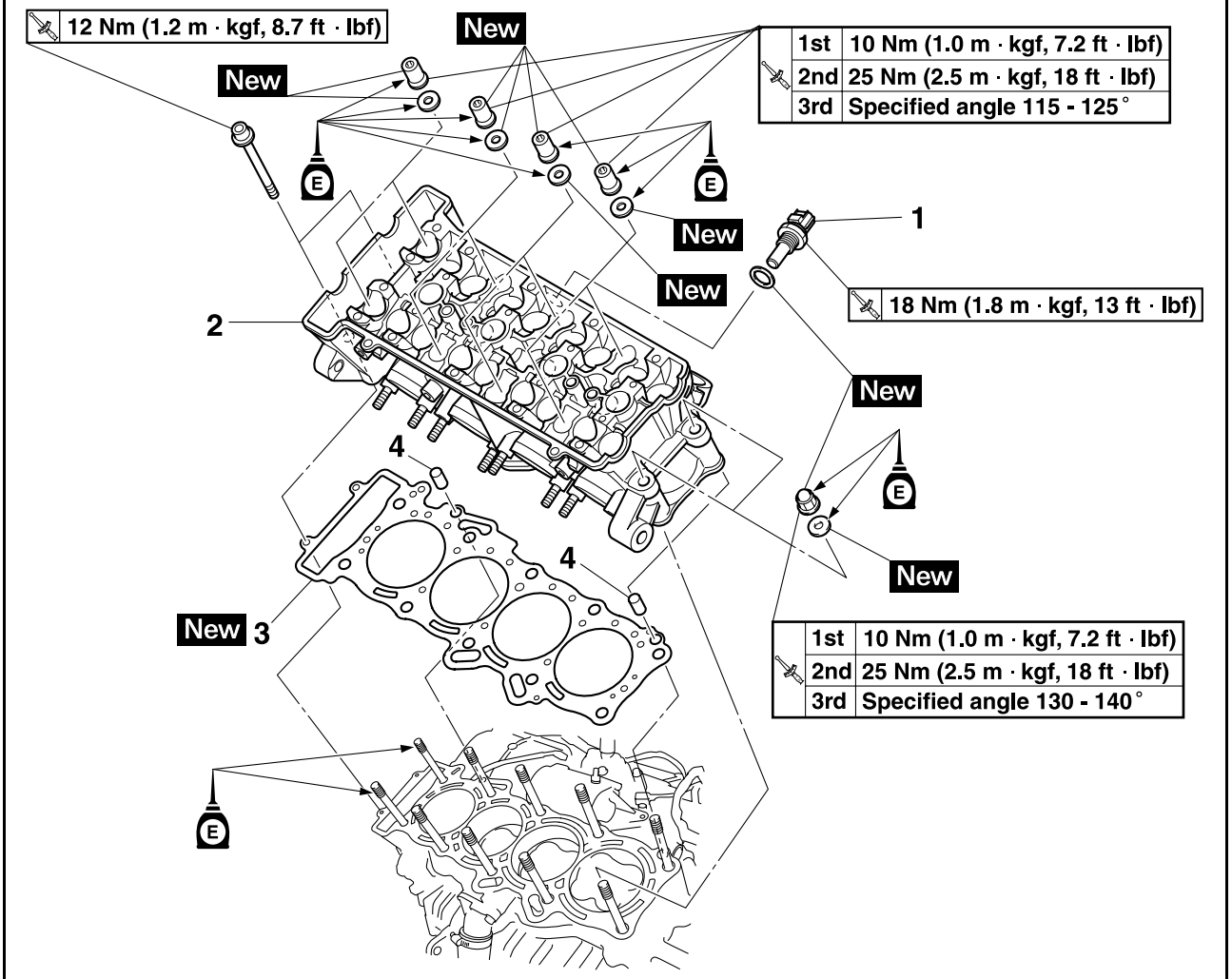

Order	Job/Parts to remove	Q'ty	Remarks
	Engine		Refer to "ENGINE REMOVAL" on page 5-3.
	Intake camshaft		Refer to "CAMSHAFTS" on page 5-13.
	Exhaust camshaft		Refer to "CAMSHAFTS" on page 5-13.
1	Coolant temperature sensor	1	
2	Cylinder head	1	
3	Cylinder head gasket	1	
4	Dowel pin	2	
			For installation, reverse the removal procedure.

EAS24120
REMOVING THE CYLINDER HEAD

1. Remove:
   - Intake camshaft
   - Exhaust camshaft
     Refer to “REMOVING THE CAMSHAFTS” on page 5-17.
2. Remove:
   - Cylinder head nuts
   - Cylinder head bolts

TIP
- Loosen the nuts in the proper sequence as shown.
- Loosen each nut 1/2 of a turn at a time. After all of the nuts are fully loosened, remove them.

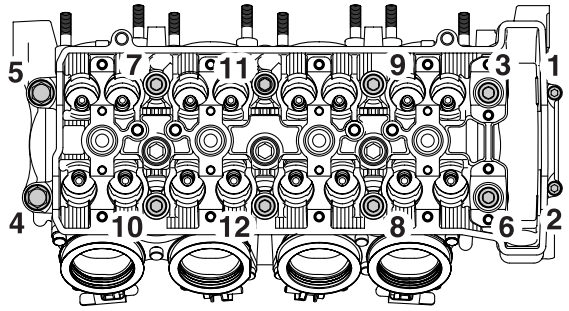

EAS24160
CHECKING THE CYLINDER HEAD

1. Eliminate:
   - Combustion chamber carbon deposits (with a rounded scraper)

TIP
Do not use a sharp instrument to avoid damaging or scratching:
- Spark plug bore threads
- Valve seats

2. Check:
   - Cylinder head
   - Dowel pins
     Damage/scratches → Replace.

TIP
Replace the titanium valves with the cylinder head.

   Refer to “CHECKING THE VALVE SEATS” on page 5-32.
   - Cylinder head water jacket
     Mineral deposits/rust → Eliminate.
3. Measure:
   - Cylinder head warpage
     Out of specification → Resurface the cylinder head.

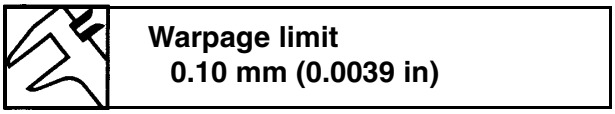

Warpage limit
0.10 mm (0.0039 in)

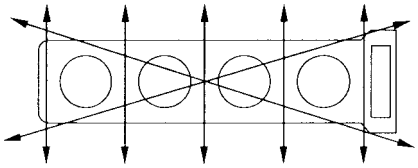

▼▼▼▼▼▼▼▼▼▼▼▼▼▼▼▼▼▼▼▼▼▼▼▼▼▼▼▼▼▼▼▼

a. Place a straightedge “1” and a thickness gauge “2” across the cylinder head.

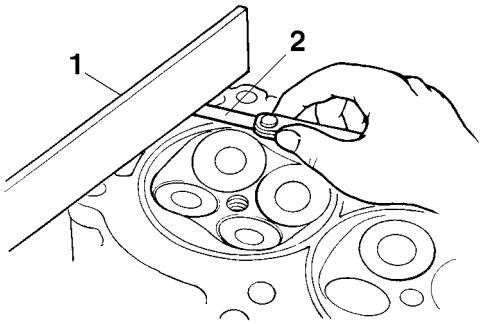

b. Measure the warpage.
c. If the limit is exceeded, resurface the cylinder head as follows.
d. Place a 400–600 grit wet sandpaper on the surface plate and resurface the cylinder head using a figure-eight sanding pattern.

TIP
To ensure an even surface, rotate the cylinder head several times.

▲▲▲▲▲▲▲▲▲▲▲▲▲▲▲▲▲▲▲▲▲▲▲▲▲▲▲▲▲▲▲▲

EAS24240
INSTALLING THE CYLINDER HEAD

1. Check:
   - Cylinder stud bolts “1”

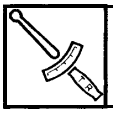

Cylinder stud bolt
8 Nm (0.8 m·kgf, 5.8 ft·lbf)

TIP
Retighten the cylinder stud bolts to specification, before installing the cylinder head.

2. Install:
   - Cylinder head gasket “2” New
   - Dowel pins

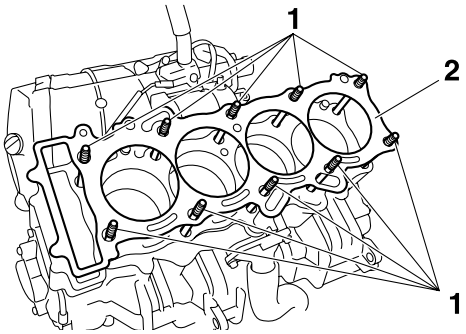

3. Install:
   - Cylinder head
   - Washers New
   - Cylinder head nuts New
   - Cylinder head bolts

TIP
- Pass the timing chain through the timing chain cavity.
- Lubricate the cylinder head nuts and washers with engine oil.

4. Tighten:
   - Cylinder head nuts “1”–“10”
   - Cylinder head bolts “11”, “12”

Cylinder head nut
1st: 10 Nm (1.0 m·kgf, 7.2 ft·lbf)
2nd: 25 Nm (2.5 m·kgf, 18 ft·lbf)
3rd: Bolt “1”–“7”, “10” +115–125° Bolt “8”, “9” +130–140°
Cylinder head bolt
12 Nm (1.2 m·kgf, 8.7 ft·lbf)

TIP
Tighten the cylinder head nuts in the tightening sequence as shown and torque them in 3 stages.

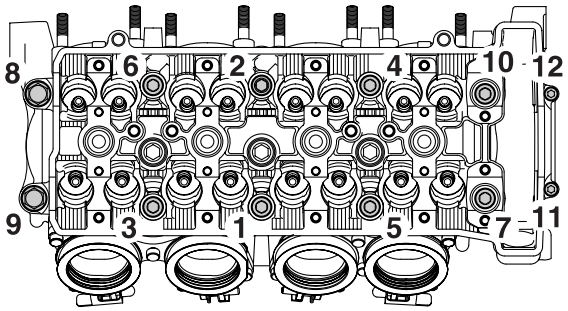

5. Install:
   - Exhaust camshaft
   - Intake camshaft
     Refer to “INSTALLING THE CAMSHAFTS” on page 5-20.

EAS24270

VALVES AND VALVE SPRINGS

Removing the valves and valve springs

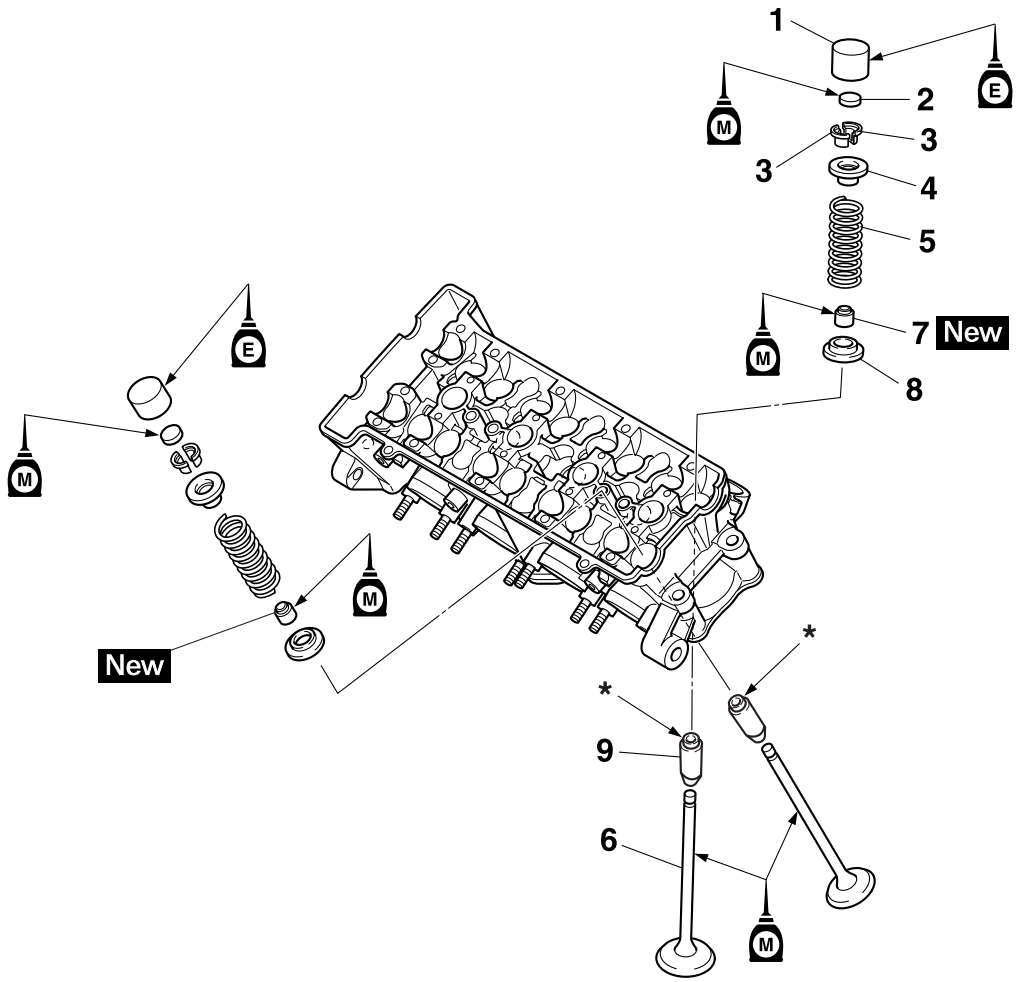

Order	Job/Parts to remove	Q'ty	Remarks
	Cylinder head		Refer to "CYLINDER HEAD" on page 5-25.
1	Intake valve lifter	8	
2	Intake valve pad	8	
3	Intake valve cotter	16	
4	Intake valve upper spring seat	8	
5	Intake valve spring	8	
6	Intake valve	8	
7	Intake valve stem seal	8	
8	Intake valve lower spring seat	8	
9	Intake valve guide	8	

* Silicon fluid

Removing the valves and valve springs

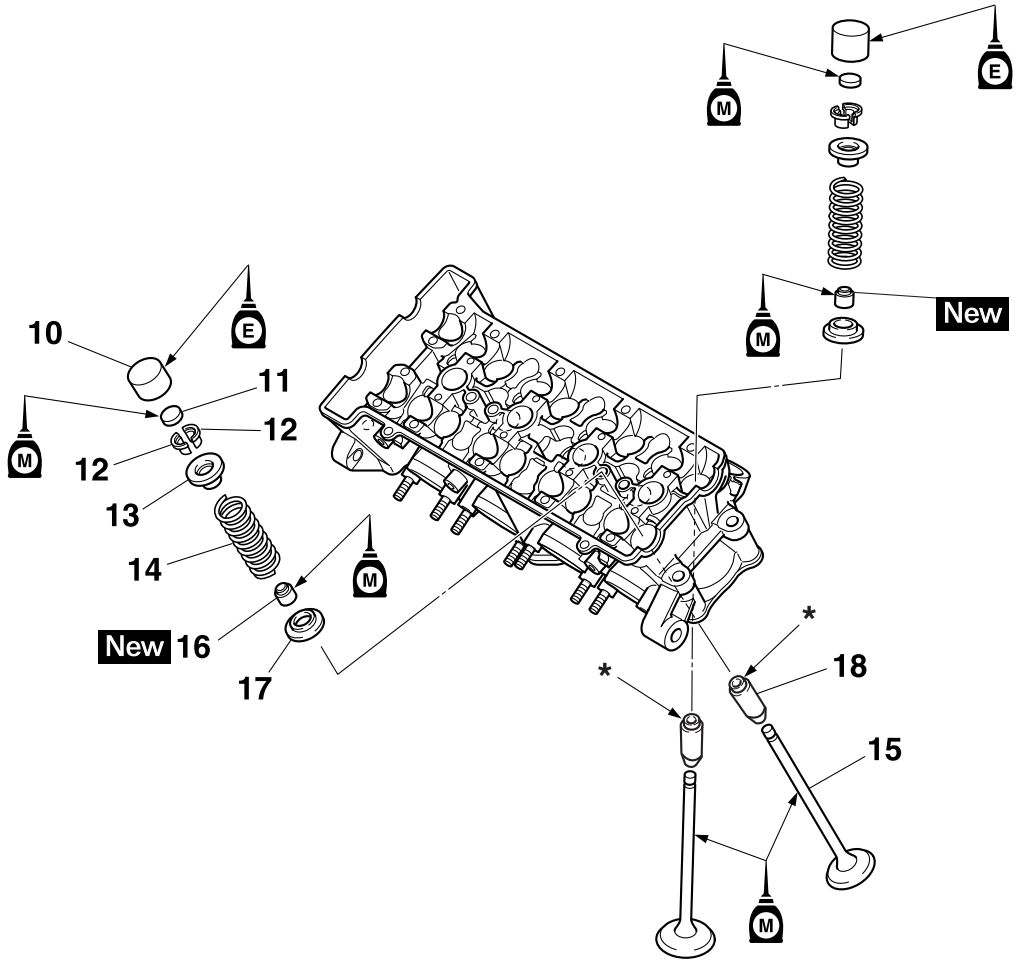

Order	Job/Parts to remove	Q'ty	Remarks
10	Exhaust valve lifter	8	
11	Exhaust valve pad	8	
12	Exhaust valve cotter	16	
13	Exhaust valve upper spring seat	8	
14	Exhaust valve spring	8	
15	Exhaust valve	8	
16	Exhaust valve stem seal	8	
17	Exhaust valve lower spring seat	8	
18	Exhaust valve guide	8	
			For installation, reverse the removal procedure.

* Silicon fluid

EAS24280
REMOVING THE VALVES

The following procedure applies to all of the valves and related components.

TIP

Before removing the internal parts of the cylinder head (e.g., valves, valve springs, valve seats), make sure the valves properly seal.

1. Remove:
   - Valve lifter “1”
   - Valve pad “2”

TIP

Make a note of the position of each valve lifter and valve pad so that they can be reinstalled in their original place.

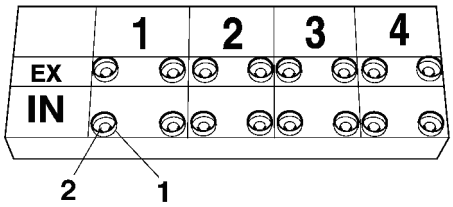

2. Check:
   - Valve sealing
     Leakage at the valve seat → Check the valve face, valve seat, and valve seat width.
     Refer to “CHECKING THE VALVE SEATS” on page 5-32.

▼▼▼▼▼▼▼▼▼▼▼▼▼▼▼▼▼▼▼▼▼▼▼▼▼▼▼▼▼▼▼▼▼▼

a. Pour a clean solvent “a” into the intake and exhaust ports.
b. Check that the valves properly seal.

TIP

There should be no leakage at the valve seat “1”.

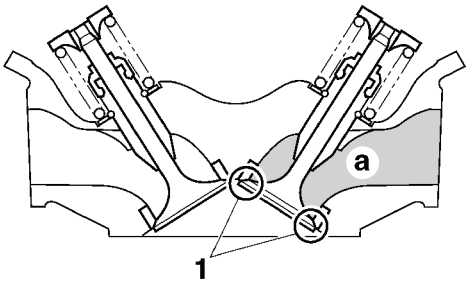

▲▲▲▲▲▲▲▲▲▲▲▲▲▲▲▲▲▲▲▲▲▲▲▲▲▲▲▲▲▲▲▲▲▲

3. Remove:
   - Valve cotters

TIP

Remove the valve cotters by compressing the valve spring with the valve spring compressor “1” and the valve spring compressor attachment “2”.

Valve spring compressor
90890-04019
YM-04019
Valve spring compressor attachment
90890-04108
Valve spring compressor adapter 22 mm
YM-04108

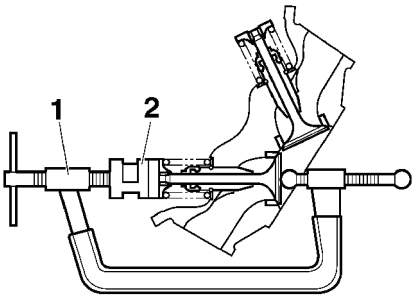

4. Remove:
   - Upper spring seat “1”
   - Valve spring “2”
   - Valve “3”
   - Valve stem seal “4”
   - Lower spring seat “5”

TIP

Identify the position of each part very carefully so that it can be reinstalled in its original place.

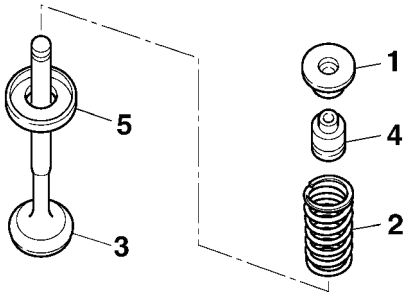

EAS24290

CHECKING THE VALVES AND VALVE GUIDES

The following procedure applies to all of the valves and valve guides.

1. Measure:
   - Valve-stem-to-valve-guide clearance
     Out of specification → Replace the valve guide.

- Valve-stem-to-valve-guide clearance = Valve guide inside diameter “a” - Valve stem diameter “b”

Valve-stem-to-valve-guide clearance

Valve-stem-to-valve-guide clearance (intake)
0.010–0.037 mm (0.0004–0.0015 in)
Limit
0.080 mm (0.0032 in)
Valve-stem-to-valve-guide clearance (exhaust)
0.025–0.052 mm (0.0010–0.0020 in)
Limit
0.100 mm (0.0039 in)

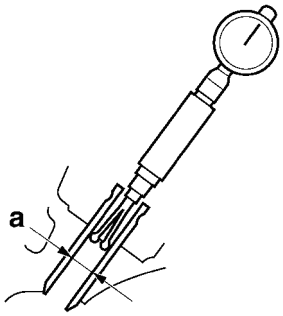

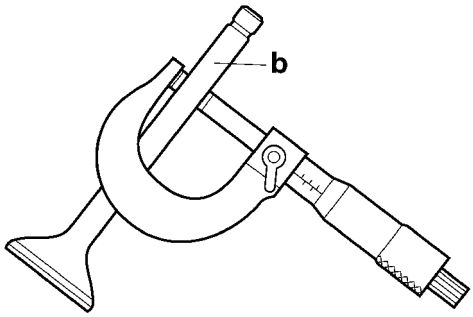

2. Replace:
   - Valve guide

TIP
To ease valve guide removal and installation, and to maintain the correct fit, heat the cylinder head to 100 °C (212 °F) in an oven.

a. Remove the valve guide with the valve guide remover “1”.

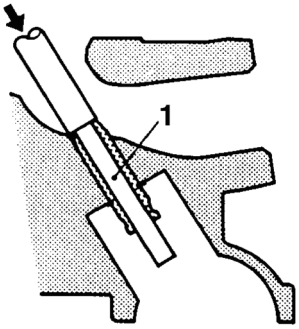

b. Install the new valve guide with the valve guide installer “2” and valve guide remover “1”.

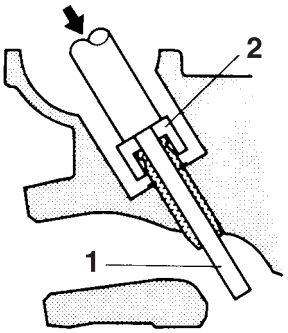

c. After installing the valve guide, bore the valve guide with the valve guide reamer “3” to obtain the proper valve-stem-to-valve-guide clearance.

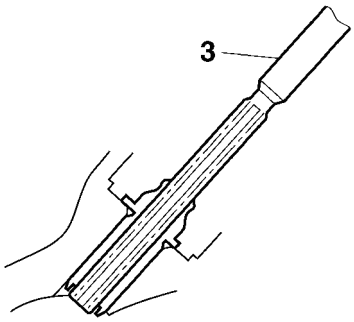

TIP
After replacing the valve guide, reface the valve seat.

Valve guide remover (ø4.5)
90890-04116
Valve guide remover (4.5 mm)
YM-04116
Valve guide remover (ø5)
90890-04097
Valve guide remover (5.0 mm)
YM-04097
Valve guide installer (ø4.5)
90890-04117
Valve guide installer (4.5 mm)
YM-04117
Valve guide installer (ø5)
90890-04098
Valve guide installer (5.0 mm)
YM-04098
Valve guide reamer (ø4.5)
90890-04118
Valve guide reamer (4.5 mm)
YM-04118
Valve guide reamer (ø5)
90890-04099
Valve guide reamer (5.0 mm)
YM-04099

▲▲▲▲▲▲▲▲▲▲▲▲▲▲▲▲▲▲▲▲▲▲▲▲▲▲▲▲▲▲▲▲

3. Eliminate:
   - Carbon deposits
     (from the valve face and valve seat)
4. Check:
   - Valve face
     Pitting/wear → Grind the valve face.
   - Valve stem end
     Mushroom shape or diameter larger than the body of the valve stem → Replace the valve.
5. Measure:
   - Valve margin thickness “a”
     Out of specification → Replace the valve.

Valve margin thickness
Valve margin thickness D (intake)
1.35–1.75 mm (0.0532–0.0689 in)
Valve margin thickness D (exhaust)
0.50–0.90 mm (0.0197–0.0354 in)

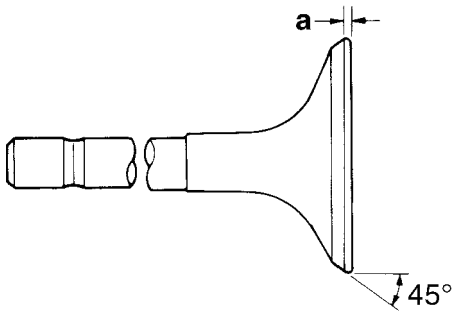

6. Measure:
   - Valve stem runout
     Out of specification → Replace the valve.

TIP
- When installing a new valve, always replace the valve guide.
- If the valve is removed or replaced, always replace the oil seal.

Valve stem runout
0.010 mm (0.0004 in)

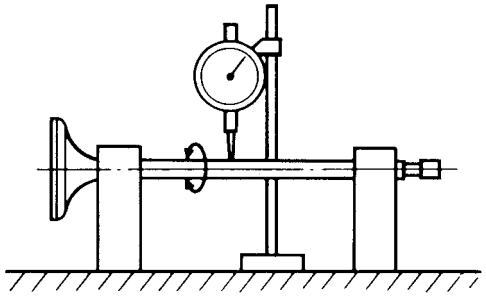

EAS24300
CHECKING THE VALVE SEATS

The following procedure applies to all of the valves and valve seats.

1. Eliminate:
   - Carbon deposits
     (from the valve face and valve seat)
2. Check:
   - Valve seat
     Pitting/wear → Replace the cylinder head.
3. Measure:
   - Valve seat width “a”
     Out of specification → Replace the cylinder head.

Valve seat width
Valve seat width C (intake)
0.90–1.10 mm (0.0354–0.0433 in)
Limit
1.60 mm (0.06 in)
Valve seat width C (exhaust)
1.10–1.30 mm (0.0433–0.0512 in)
Limit
1.80 mm (0.07 in)

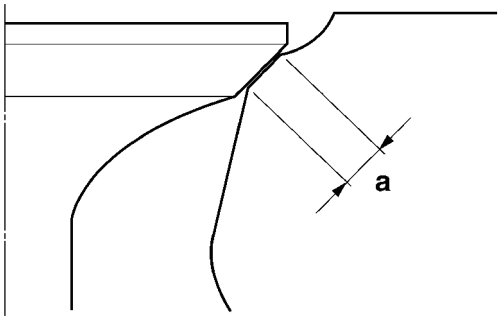

▼▼▼▼▼▼▼▼▼▼▼▼▼▼▼▼▼▼▼▼▼▼▼▼▼▼▼▼▼▼▼▼

a. Apply Mechanic's blueing dye (Dykem) "b" onto the valve face.

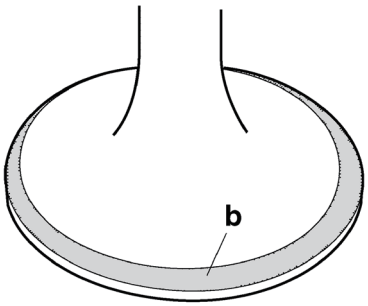

b. Install the valve into the cylinder head.
c. Press the valve through the valve guide and onto the valve seat to make a clear impression.
d. Measure the valve seat width.

TIP
Where the valve seat and valve face contacted one another, the blueing will have been removed.

▲▲▲▲▲▲▲▲▲▲▲▲▲▲▲▲▲▲▲▲▲▲▲▲▲▲▲▲▲▲▲▲

4. Lap:
   - Valve face
   - Valve seat

TIP
After replacing the cylinder head or replacing the valves and valve guides, the valve seat and valve face should be lapped.

ECA14B1031
NOTICE
This model uses titanium intake valves. Titanium valves that have been used to lap the valve seats must not be used. Always replace lapped valves with new valves.

TIP
- When replacing the intake valves, replace the intake valves without lapping the valve seats and valve faces.
- When replacing the cylinder head or intake valve guides, use new valves to lap the valve seats, and then replace them with new intake valves.

▼▼▼▼▼▼▼▼▼▼▼▼▼▼▼▼▼▼▼▼▼▼▼▼▼▼▼▼▼▼▼▼

a. Apply a coarse lapping compound "a" to the valve face.

ECA13790
NOTICE
Do not let the lapping compound enter the gap between the valve stem and the valve guide.

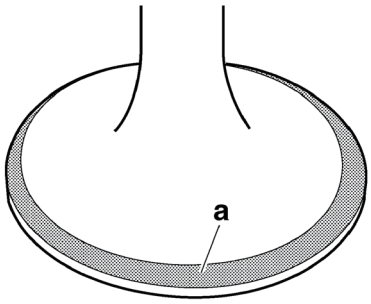

b. Apply molybdenum disulfide oil onto the valve stem.
c. Install the valve into the cylinder head.
d. Turn the valve until the valve face and valve seat are evenly polished, then clean off all of the lapping compound.

TIP
For the best lapping results, lightly tap the valve seat while rotating the valve back and forth between your hands.

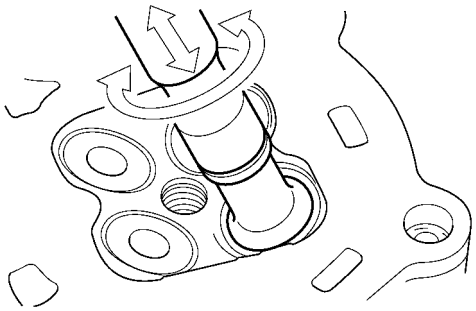

e. Apply a fine lapping compound to the valve face and repeat the above steps.
f. After every lapping procedure, be sure to clean off all of the lapping compound from the valve face and valve seat.
g. Apply Mechanic's blueing dye (Dykem) "b" onto the valve face.

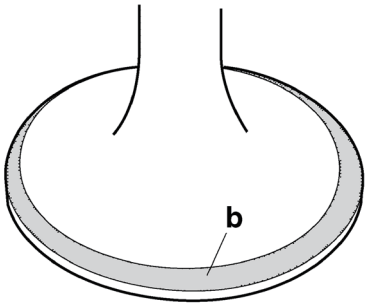

h. Install the valve into the cylinder head.
i. Press the valve through the valve guide and onto the valve seat to make a clear impression.
j. Measure the valve seat width "c" again. If the valve seat width is out of specification, reface and lap the valve seat.

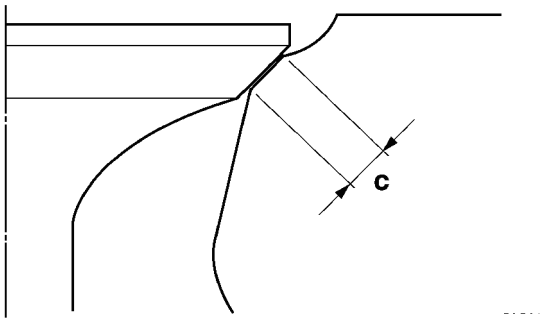

▲▲▲▲▲▲▲▲▲▲▲▲▲▲▲▲▲▲▲▲▲▲▲▲▲▲▲▲▲▲

EAS24310

CHECKING THE VALVE SPRINGS

The following procedure applies to all of the valve springs.

1. Measure:
   - Valve spring free length "a"
     Out of specification → Replace the valve spring.

Valve spring free length
Free length (intake)
39.33 mm (1.55 in)
Limit
37.36 mm (1.47 in)
Free length (exhaust)
37.96 mm (1.49 in)
Limit
36.06 mm (1.42 in)

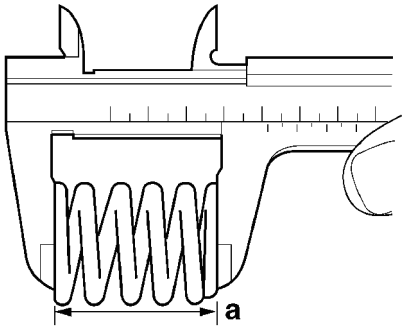

2. Measure:
   - Compressed valve spring force "a"
     Out of specification → Replace the valve spring.

Installed compression spring force (intake)
187.00–215.00 N (19.07–21.92 kgf, 42.04–48.33 lbf)
Installed compression spring force (exhaust)
185.00–213.00 N (18.86–21.72 kgf, 41.59–47.88 lbf)
Installed length (intake)
34.50 mm (1.36 in)
Installed length (exhaust)
33.00 mm (1.30 in)

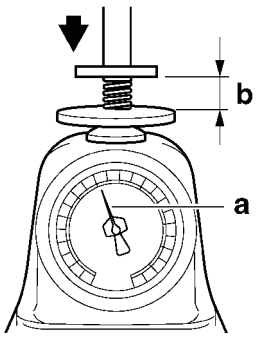

b. Installed length

3. Measure:
   - Valve spring tilt “a”
     Out of specification → Replace the valve spring.

Spring tilt limit
Spring tilt (intake)
2.5°/1.7 mm (0.067 in)
Spring tilt (exhaust)
2.5°/1.7 mm (0.067 in)

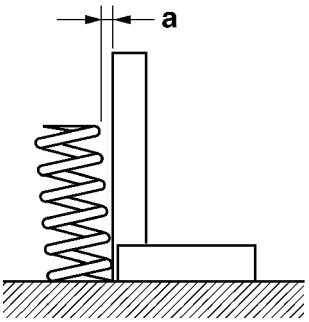

EAS24320
CHECKING THE VALVE LIFTERS

The following procedure applies to all of the valve lifters.

1. Check:
   - Valve lifter
     Damage/scratches → Replace the valve lifters and cylinder head.

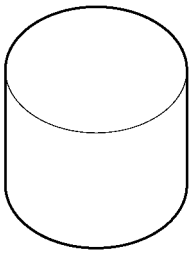

EAS24340
INSTALLING THE VALVES

The following procedure applies to all of the valves and related components.

1. Deburr:
   - Valve stem end
     (with an oil stone)

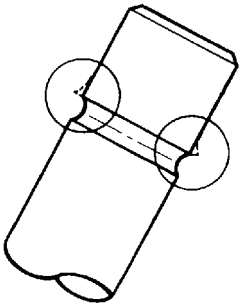

2. Lubricate:
   - Valve stem “1”
   - Valve stem seal “2”
     (with the recommended lubricant)

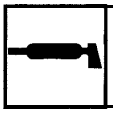

Recommended lubricant
Molybdenum disulfide oil

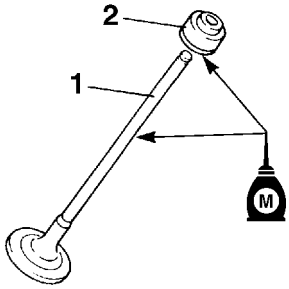

3. Install:
   - Lower spring seat “1”
   - Valve stem seal “2”
   - Valve “3”
   - Valve spring “4”
   - Upper spring seat “5”
     (into the cylinder head)

TIP
- Make sure each valve is installed in its original place. Refer to the following embossed marks.
  Intake valve: Blue paint mark
  Exhaust valve: “14B”
- Install the valve springs with the larger pitch “a” facing up.
- When installing the valve stem seal to the valve guide, apply silicon fluid to the valve stem seal.

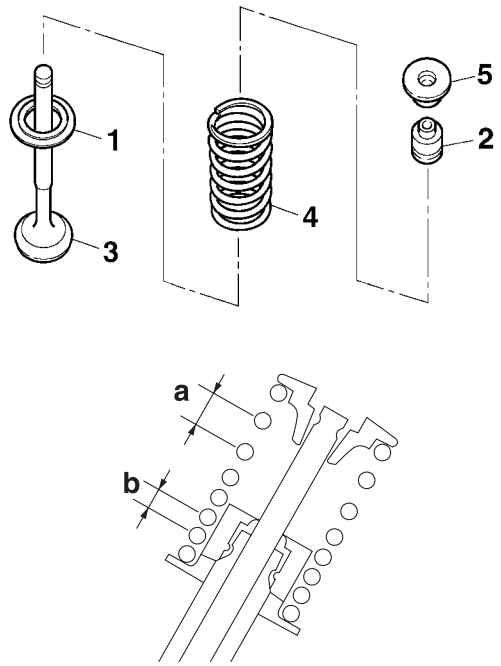

b. Smaller pitch

4. Install:
   - Valve cotters “1”

TIP

Install the valve cotters by compressing the valve spring with the valve spring compressor “2” and the valve spring compressor attachment “3”.

Valve spring compressor
90890-04019
YM-04019
Valve spring compressor attachment
90890-04108
Valve spring compressor adapter 22 mm
YM-04108

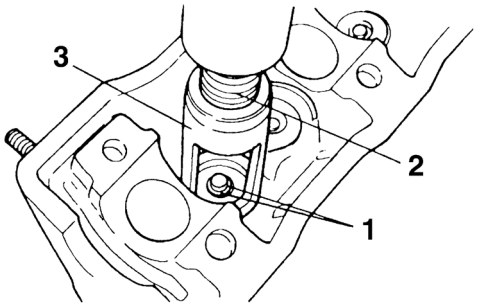

5. To secure the valve cotters onto the valve stem, lightly tap the valve tip with a soft-face hammer.

ECA13800

NOTICE

Hitting the valve tip with excessive force could damage the valve.

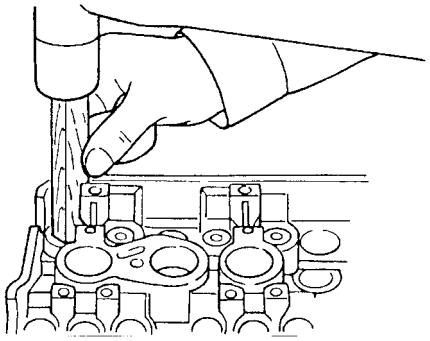

6. Lubricate:
   - Valve pad
   - Valve lifter
   (with the recommended lubricant)

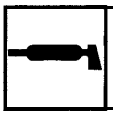

Recommended lubricant
Molybdenum disulfide oil

7. Install:
   - Valve pad
   - Valve lifter

TIP

- The valve lifter must move smoothly when rotated with a finger.
- Each valve lifter and valve pad must be reinstalled in its original position.

EAS24480
GENERATOR

Removing the generator

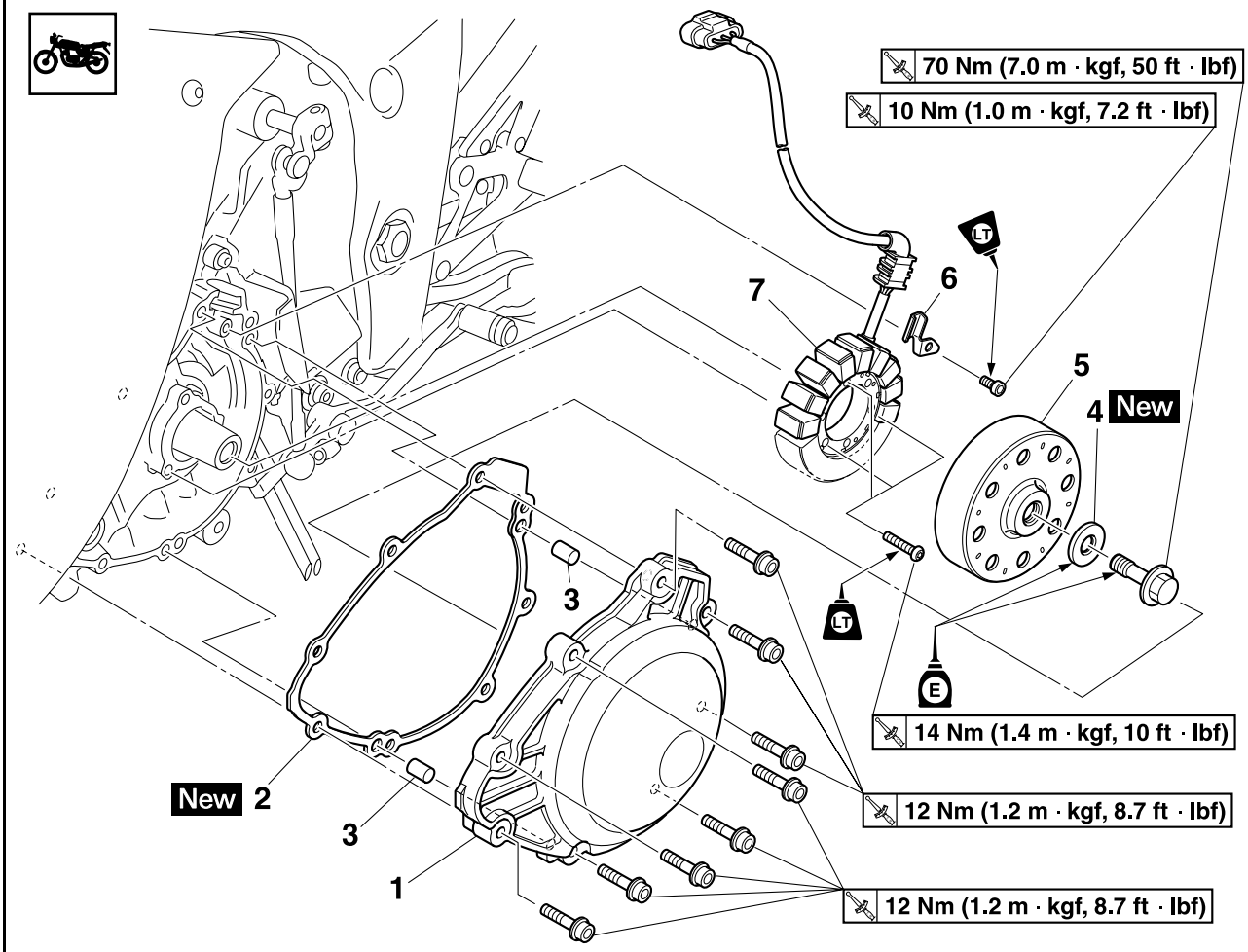

Order	Job/Parts to remove	Q'ty	Remarks
	Fuel tank		Refer to "FUEL TANK" on page 7-1.
	Air filter case		Refer to "AIR FILTER CASE" on page 7-5.
	Side cowling		Refer to "GENERAL CHASSIS" on page 4-1.
	Stator coil lead coupler		Refer to "GENERAL CHASSIS" on page 4-1.
1	Generator cover	1	
2	Generator cover gasket	1	
3	Dowel pin	2	
4	Washer	1	
5	Generator rotor	1	
6	Stator coil lead holder	1	
7	Stator coil assembly	1	
			For installation, reverse the removal procedure.

EAS24490
REMOVING THE GENERATOR

1. Remove:
   - Generator cover
   - Generator cover gasket
   - Dowel pins
2. Remove:
   - Generator rotor bolt “1”
   - Washer

TIP

While holding the generator rotor “2” with the sheave holder “3”, loosen the generator rotor bolt.

Sheave holder
90890-01701
Primary clutch holder
YS-01880-A

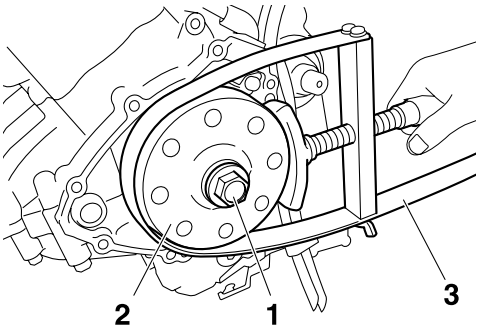

3. Remove:
   - Generator rotor “1”
     (with the rotor puller “2” and sheave holder “3”)

Rotor puller
2K7-85555-00
Sheave holder
90890-01701
Primary clutch holder
YS-01880-A

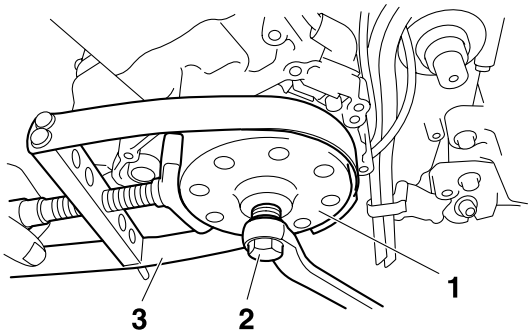

4. Remove:
   - Stator coil lead holder “1”
   - Stator coil assembly “2”

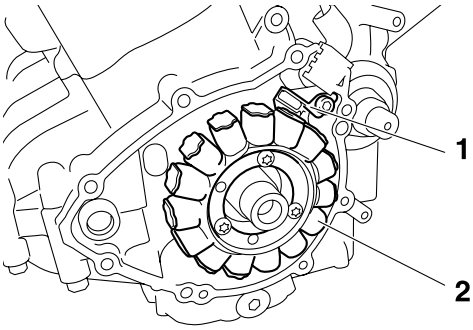

EAS24500
INSTALLING THE GENERATOR

1. Install:
   - Stator coil assembly
   - Stator coil lead holder

Stator coil assembly bolt
14 Nm (1.4 m·kgf, 10 ft·lbf)
LOCTITE®
Stator coil lead holder bolt
10 Nm (1.0 m·kgf, 7.2 ft·lbf)
LOCTITE®

2. Install:
   - Generator rotor
   - Washer New
   - Generator rotor bolt

TIP

- Clean the tapered portion of the crankshaft and the generator rotor hub.
- Lubricate the generator rotor bolt threads and washer mating surfaces with engine oil.

3. Tighten:
   - Generator rotor bolt “1”

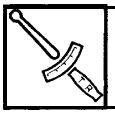

Generator rotor bolt
70 Nm (7.0 m·kgf, 50 ft·lbf)

TIP

While holding the generator rotor “2” with the sheave holder “3”, tighten the generator rotor bolt.

Sheave holder
90890-01701
Primary clutch holder
YS-01880-A

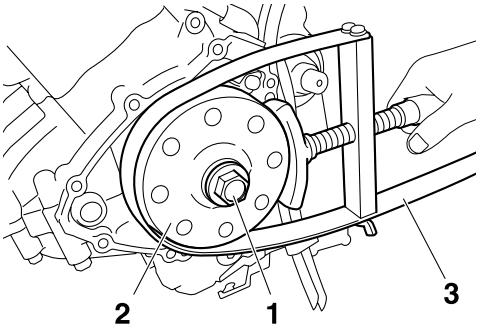

4. Apply:
   - Sealant
     (onto the stator coil lead grommet “1”)

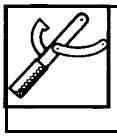

Yamaha bond No.1215
(Three Bond No.1215®)
90890-85505

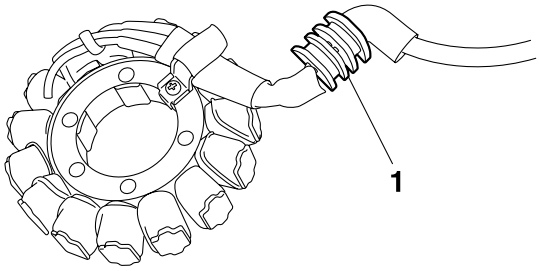

EAS24550

STARTER CLUTCH

Removing the starter clutch

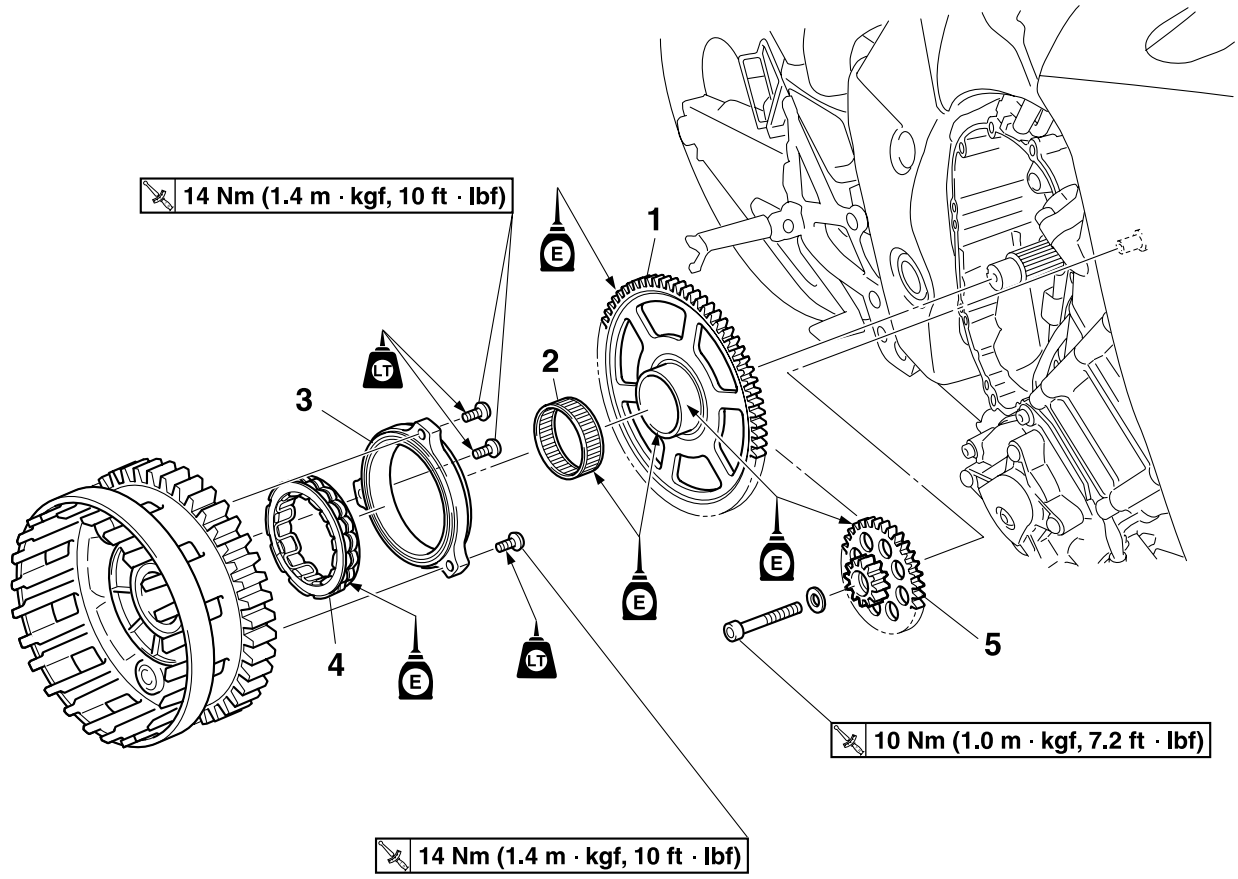

Order	Job/Parts to remove	Q'ty	Remarks
	Clutch housing assembly		Refer to "CLUTCH" on page 5-59.
1	Starter clutch gear	1	
2	Bearing	1	
3	Starter clutch holder	1	
4	Starter clutch	1	
5	Starter idle gear	1	
			For installation, reverse the removal procedure.

EAS24560
REMOVING THE STARTER CLUTCH
1. Remove:
   - Starter clutch bolt “1”

TIP
- While holding the clutch housing assembly “2” with the sheave holder “3”, remove the starter clutch bolt.
- Fix the flat surface of the clutch housing assembly with the sheave holder.

Sheave holder
90890-01701
Primary clutch holder
YS-01880-A

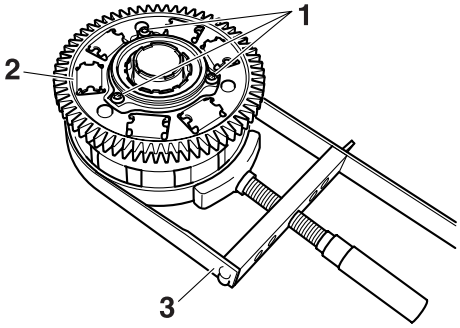

EAS24570
CHECKING THE STARTER CLUTCH
1. Check:
   - Starter clutch rollers “1”
     Damage/wear → Replace.

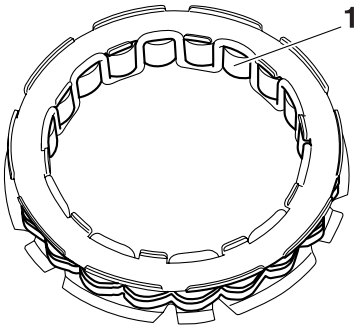

2. Check:
   - Starter clutch gear “1”
   - Starter idle gear “2”
     Burrs/chips/roughness/wear → Replace the defective part(s).

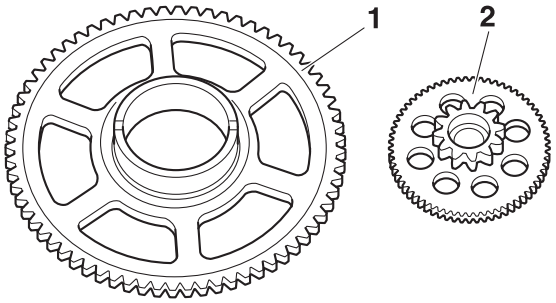

3. Check:
   - Starter clutch gear’s contacting surfaces
     Damage/pitting/wear → Replace the starter clutch gear.
4. Check:
   - Starter clutch operation

▼▼▼▼▼▼▼▼▼▼▼▼▼▼▼▼▼▼▼▼▼▼▼▼▼▼▼▼▼▼▼▼

a. Install the starter clutch gear “1” onto the clutch housing assembly “2” and hold the clutch housing assembly.
b. When turning the starter clutch gear clockwise “A”, the starter clutch and the starter clutch gear should engage, otherwise the starter clutch is faulty and must be replaced.
c. When turning the starter clutch gear counterclockwise “B”, it should turn freely, otherwise the starter clutch is faulty and must be replaced.

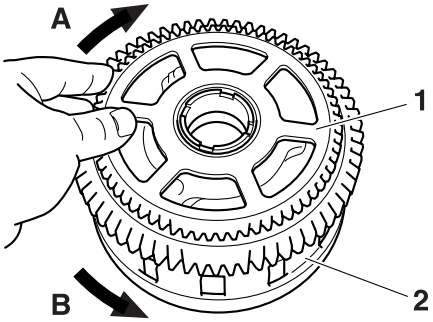

▲▲▲▲▲▲▲▲▲▲▲▲▲▲▲▲▲▲▲▲▲▲▲▲▲▲▲▲▲▲▲▲

EAS24600
INSTALLING THE STARTER CLUTCH
1. Install:
   - Starter clutch

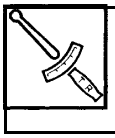

Starter clutch holder bolt
14 Nm (1.4 m·kgf, 10 ft·lbf)
LOCTITE®

TIP
- While holding the clutch housing assembly “1” with the sheave holder “2”, tighten the starter clutch holder bolt “3”.

- Fix the flat surface of the clutch housing assembly with the sheave holder.

Sheave holder
90890-01701
Primary clutch holder
YS-01880-A

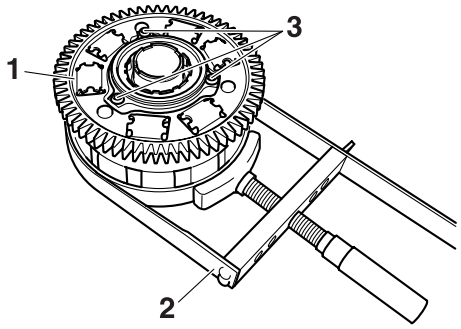

EAS14B1058

PICKUP ROTOR

Removing the pickup rotor

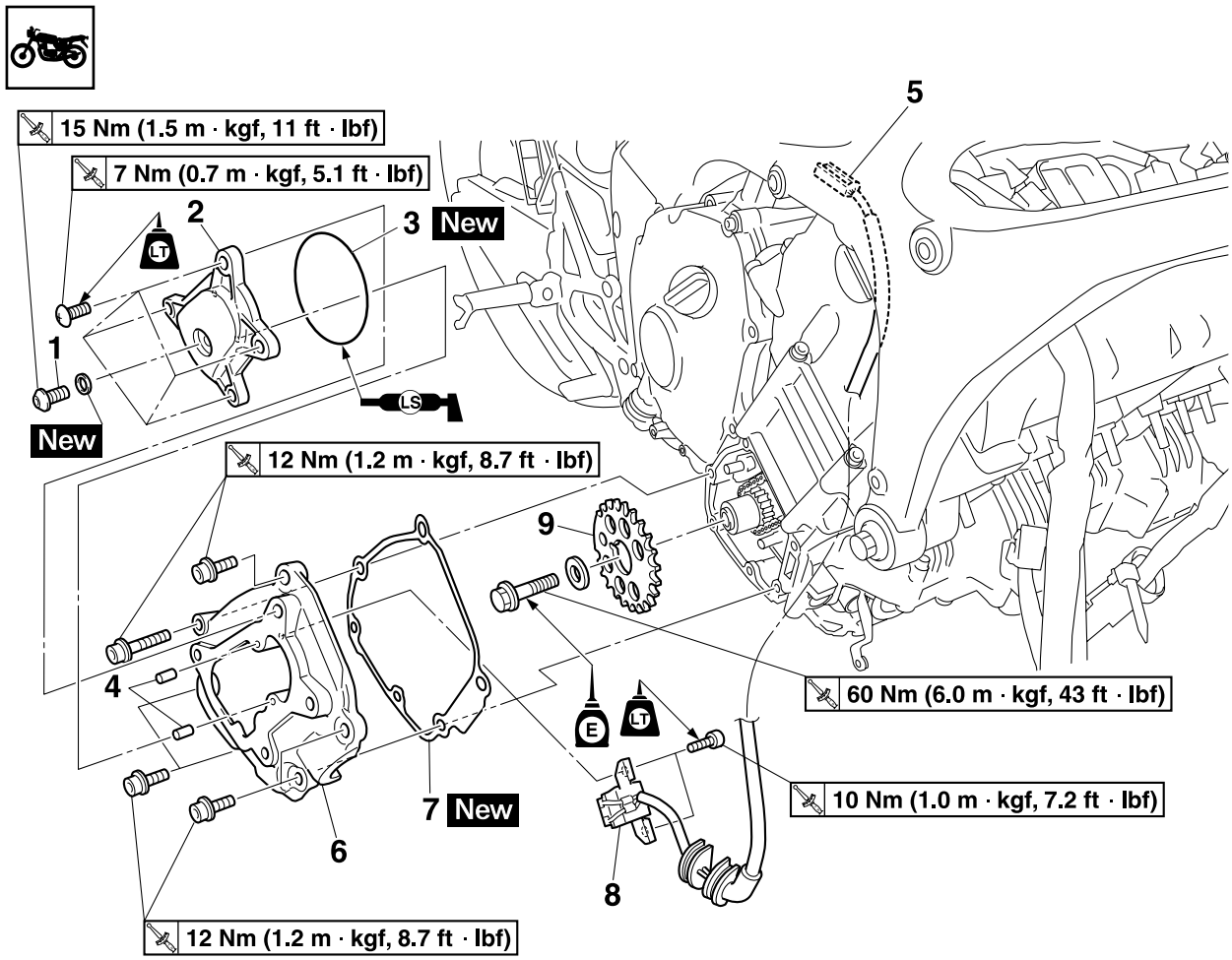

Order	Job/Parts to remove	Q'ty	Remarks
	Fuel tank		Refer to "FUEL TANK" on page 7-1.
	Generator cover		Refer to "GENERATOR" on page 5-37.
	Air filter case		Refer to "AIR FILTER CASE" on page 7-5.
1	Timing check bolt	1	
2	Pickup rotor cover 1	1	
3	O-ring	1	
4	Dowel pin	2	
5	Crankshaft position sensor coupler	1	Disconnect.
6	Pickup rotor cover 2	1	
7	Pickup rotor cover 2 gasket	1	
8	Crankshaft position sensor	1	
9	Pickup rotor	1	
			For installation, reverse the removal procedure.

EAS14B1059
REMOVING THE PICKUP ROTOR

1. Remove:
   - Pickup rotor bolt “1”
   - Washer
   - Pickup rotor

TIP

While holding the generator rotor “2” with the sheave holder “3”, loosen the pickup rotor bolt.

Sheave holder
90890-01701
Primary clutch holder
YS-01880-A

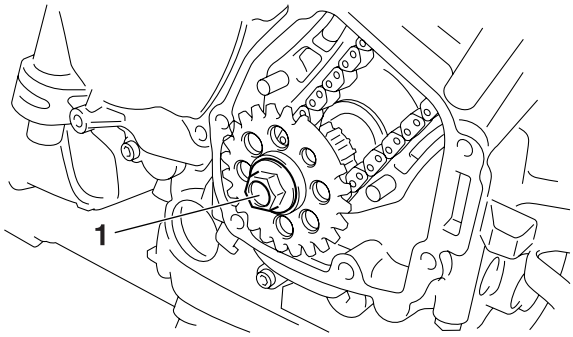

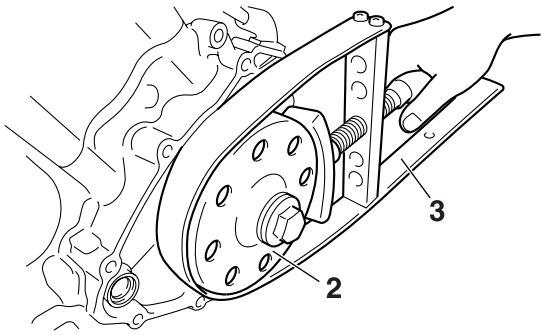

EAS14B1060
INSTALLING THE PICKUP ROTOR

1. Install:
   - Pickup rotor “1”
   - Washer
   - Pickup rotor bolt

TIP

- When installing the pickup rotor, align the woodruff key “a” with the groove “b” on the pickup rotor.
- Face the “K” mark on the pickup rotor outer side of the vehicle and install.

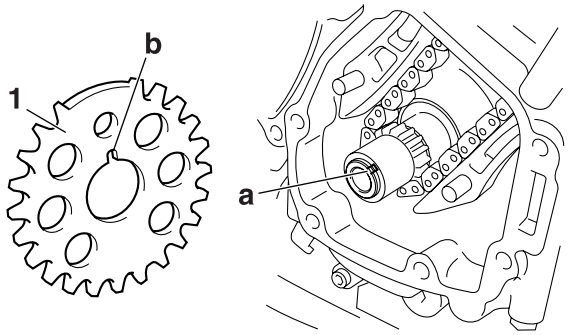

2. Tighten:
   - Pickup rotor bolt “1”

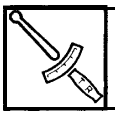

Pickup rotor bolt
60 Nm (6.0 m·kgf, 43 ft·lbf)

TIP

While holding the generator rotor “2” with the sheave holder “3”, tighten the pickup rotor bolt.

Sheave holder
90890-01701
Primary clutch holder
YS-01880-A

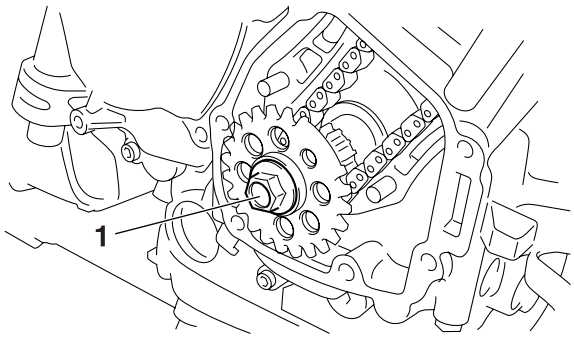

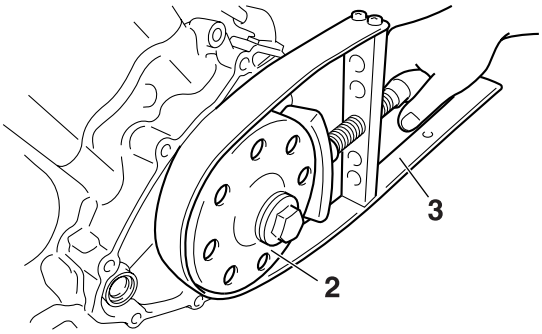

3. Apply:
   - Sealant
     (onto the crankshaft position sensor lead grommet “1”)

Yamaha bond No.1215
(Three Bond No.1215®)
90890-85505

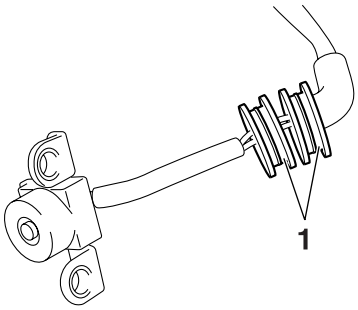

EAS24780
ELECTRIC STARTER

Removing the starter motor

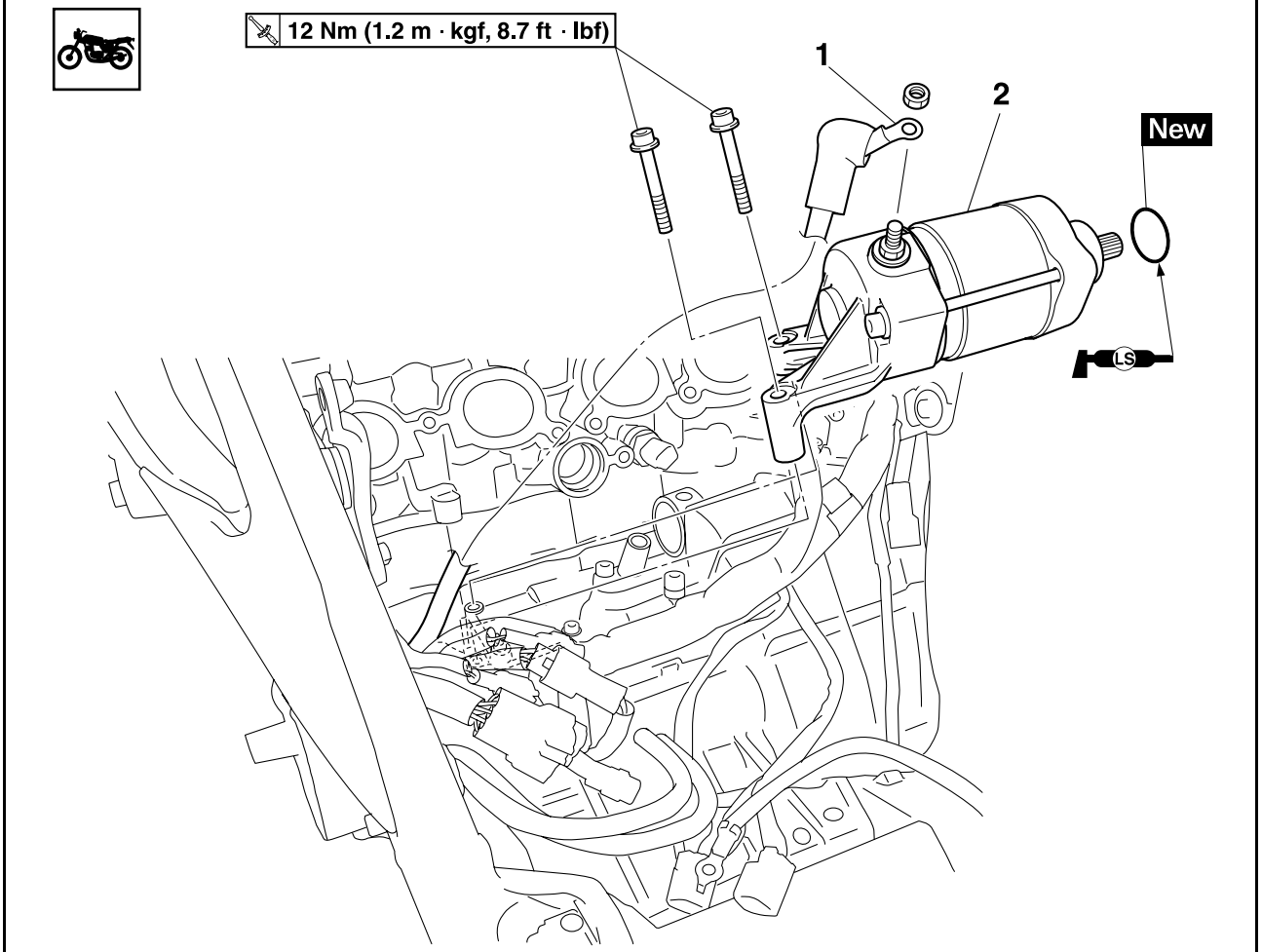

Order	Job/Parts to remove	Q'ty	Remarks
	Battery negative lead		Refer to "GENERAL CHASSIS" on page 4-1.
	Fuel tank		Refer to "FUEL TANK" on page 7-1.
	Air filter case		Refer to "AIR FILTER CASE" on page 7-5.
	Throttle body		Refer to "THROTTLE BODIES" on page 7-11.
	Engine outlet pipe		Refer to "THERMOSTAT" on page 6-8.
1	Starter motor lead	1	Disconnect.
2	Starter motor	1	
			For installation, reverse the removal procedure.

Disassembling the starter motor

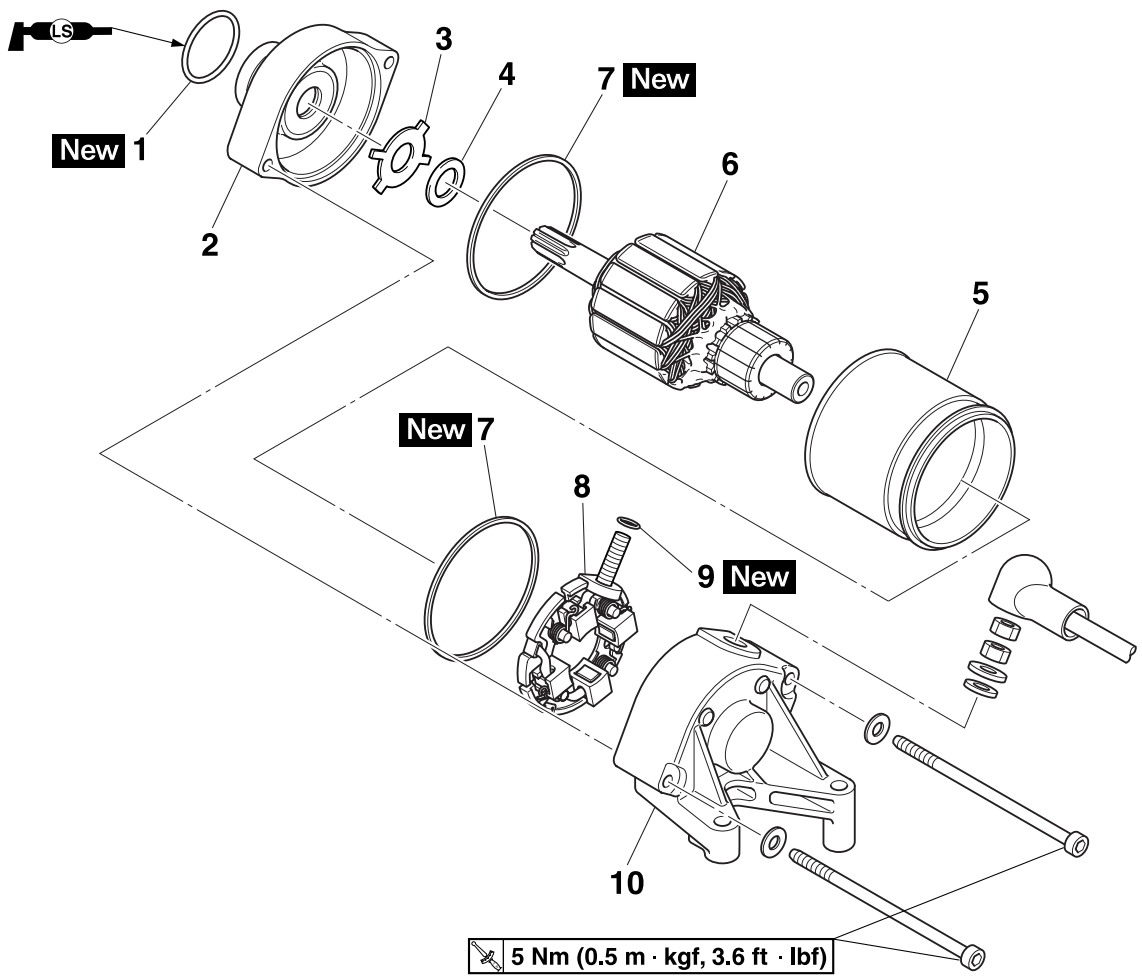

Order	Job/Parts to remove	Q'ty	Remarks
1	O-ring	1	
2	Front cover	1	
3	Lock washer	1	
4	Washer	1	
5	Starter motor yoke	1	
6	Armature assembly	1	
7	Gasket	2	
8	Brush holder	1	
9	O-ring	1	
10	Rear cover	1	
			For installation, reverse the removal procedure.

EAS24790
CHECKING THE STARTER MOTOR

1. Check:
   - Commutator
     Dirt → Clean with 600 grit sandpaper.
2. Measure:
   - Commutator diameter “a”
     Out of specification → Replace the starter motor.

Limit
23.5 mm (0.93 in)

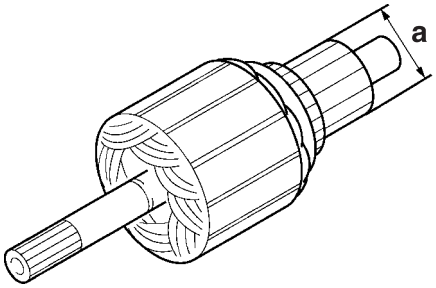

3. Measure:
   - Mica undercut “a”
     Out of specification → Scrape the mica to the proper measurement with a hacksaw blade that has been grounded to fit the commutator.

Mica undercut (depth)
1.50 mm (0.06 in)

TIP
The mica of the commutator must be undercut to ensure proper operation of the commutator.

4. Measure:
   - Armature assembly resistances (commutator and insulation)
     Out of specification → Replace the starter motor.

▼▼▼▼▼▼▼▼▼▼▼▼▼▼▼▼▼▼▼▼▼▼▼▼▼▼▼▼▼▼▼▼

a. Measure the armature assembly resistances with the pocket tester.

Pocket tester
90890-03112
Analog pocket tester
YU-03112-C

Armature coil
Commutator resistance
0.0090–0.0110 Ω at 20 °C (68 °F)
Insulation resistance
Above 1 MΩ at 20 °C (68 °F)

b. If any resistance is out of specification, replace the starter motor.

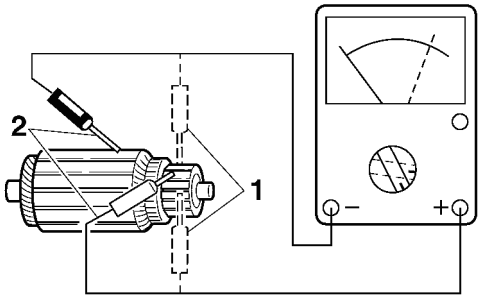

1. Commutator resistance
2. Insulation resistance

▲▲▲▲▲▲▲▲▲▲▲▲▲▲▲▲▲▲▲▲▲▲▲▲▲▲▲▲▲▲▲▲

5. Measure:
   - Brush length “a”
     Out of specification → Replace the brush holder.

Limit
7.19 mm (0.28 in)

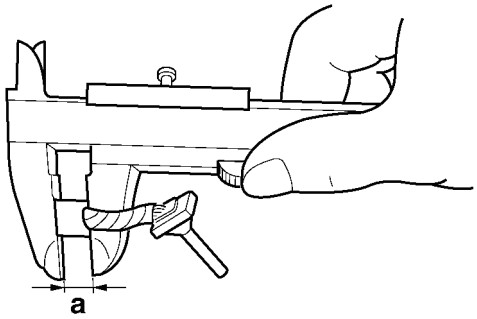

6. Measure:
   - Brush spring force
     Out of specification → Replace the brush holder.

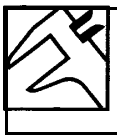

Brush spring force
5.28–7.92 N (538–808 gf, 19.01–28.51 oz)

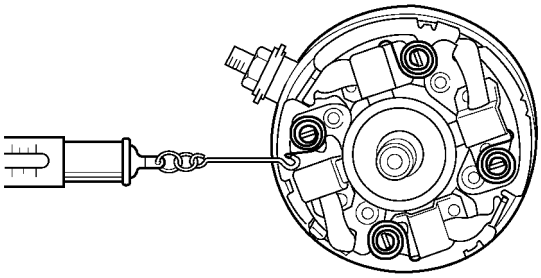

7. Check:
   - Gear teeth
     Damage/wear → Replace the gear.

EAS24800
ASSEMBLING THE STARTER MOTOR

1. Install:
   - Brush holder
   - Armature assembly
   - O-ring New

▼▼▼▼▼▼▼▼▼▼▼▼▼▼▼▼▼▼▼▼▼▼▼▼▼▼▼▼▼▼▼▼▼▼

a. Pull both the brush spring “1” and the brush “2” outside and hook the brush spring to the groove portion at the side of the brush.

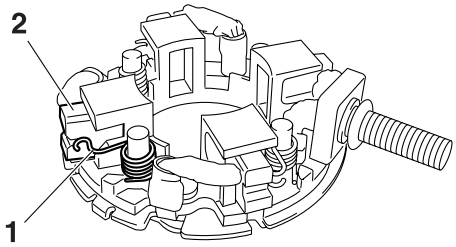

b. Insert the armature assembly “3” into the brush holder “4” and push the brush “5” inside until it touches the armature assembly.

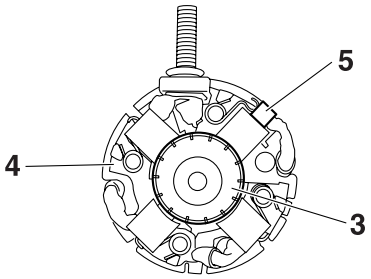

▲▲▲▲▲▲▲▲▲▲▲▲▲▲▲▲▲▲▲▲▲▲▲▲▲▲▲▲▲▲▲▲▲▲

2. Install:
   - Rear cover “1”

TIP
Align the tab “a” on the brush holder “2” with the tab “b” in the rear cover.

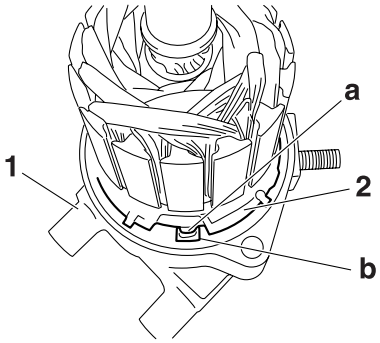

3. Install:
   - Washer
   - Nut “1”

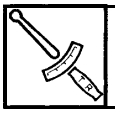

Nut
5 Nm (0.5 m·kgf, 3.6 ft·lbf)

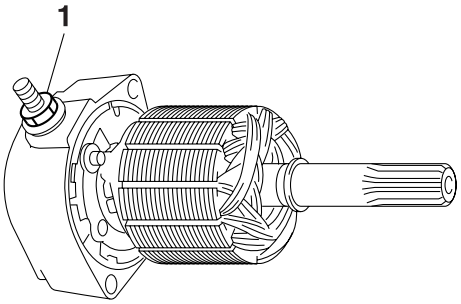

4. Install:
   - Starter motor yoke “1”
   - Gaskets “2” New
   - Front cover “3”
   - Starter motor assembling bolts “4”

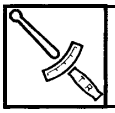

Starter motor assembling bolt
5 Nm (0.5 m·kgf, 3.6 ft·lbf)

TIP
Align the match marks “a” on the starter motor yoke with the match marks “b” on the front and rear covers.

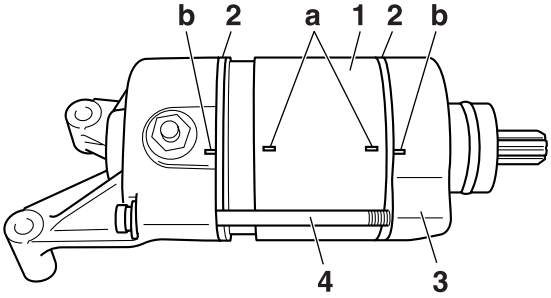
b
2
a
1
2
b
4
3

EAS24921
OIL PUMP

Removing the oil pan and oil/water pump assembly

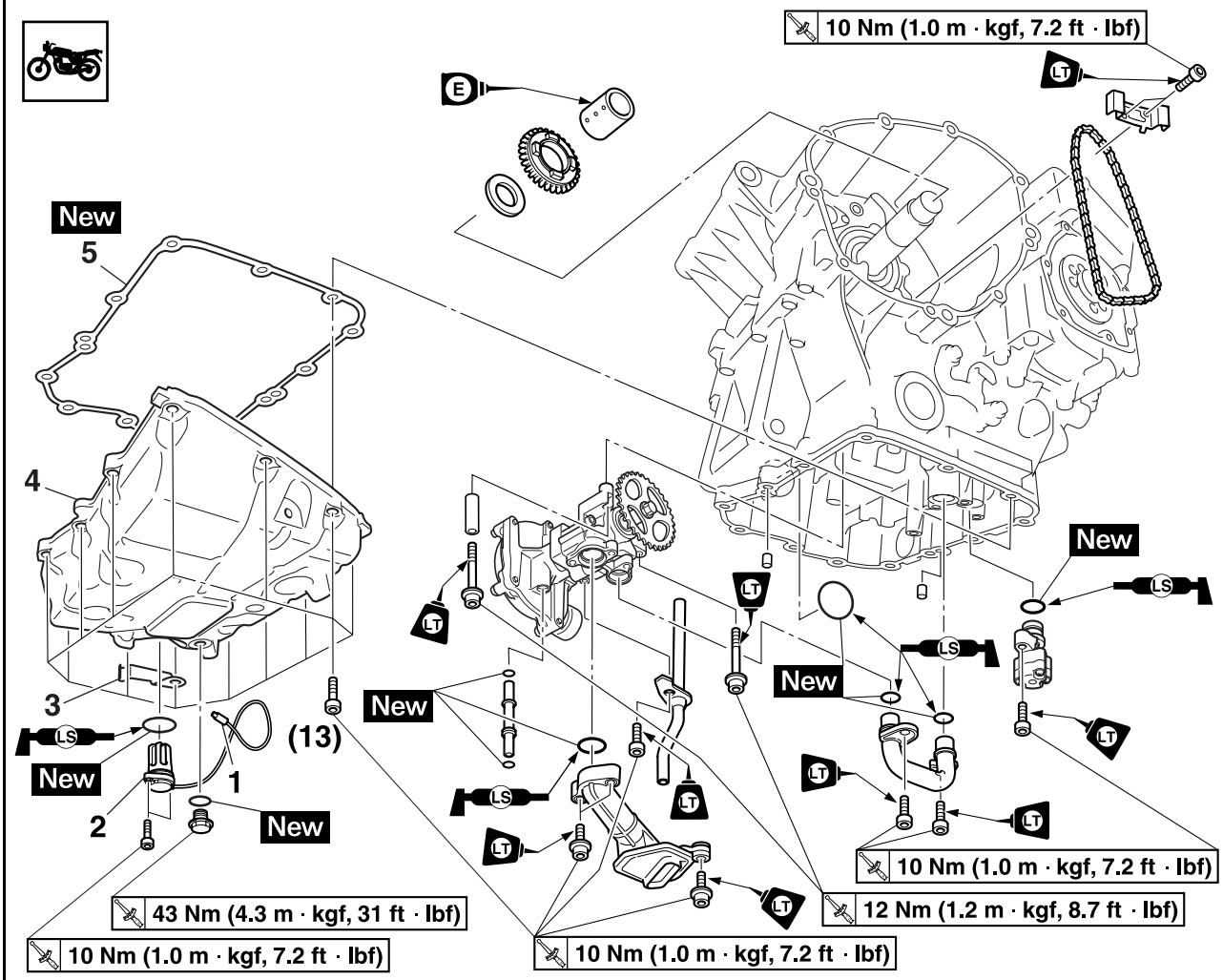

Order	Job/Parts to remove	Q'ty	Remarks
	Side cowling		Refer to "GENERAL CHASSIS" on page 4-1.
	Lower cowling		Refer to "GENERAL CHASSIS" on page 4-1.
	Engine oil		Drain. Refer to "CHANGING THE ENGINE OIL" on page 3-27.
	Fuel tank		Refer to "FUEL TANK" on page 7-1.
	Coolant reservoir		Refer to "RADIATOR" on page 6-1.
	Exhaust pipe		Refer to "ENGINE REMOVAL" on page 5-3.
	Clutch assembly		Refer to "CLUTCH" on page 5-59.
	Water pump inlet pipe		Refer to "RADIATOR" on page 6-1.
	Water pump outlet pipe		Refer to "OIL COOLER" on page 6-5.
1	Oil level switch lead coupler	1	Disconnect.
2	Oil level switch	1	
3	Oil level switch lead holder	1	
4	Oil pan	1	
5	Oil pan gasket	1	

Removing the oil pan and oil/water pump assembly

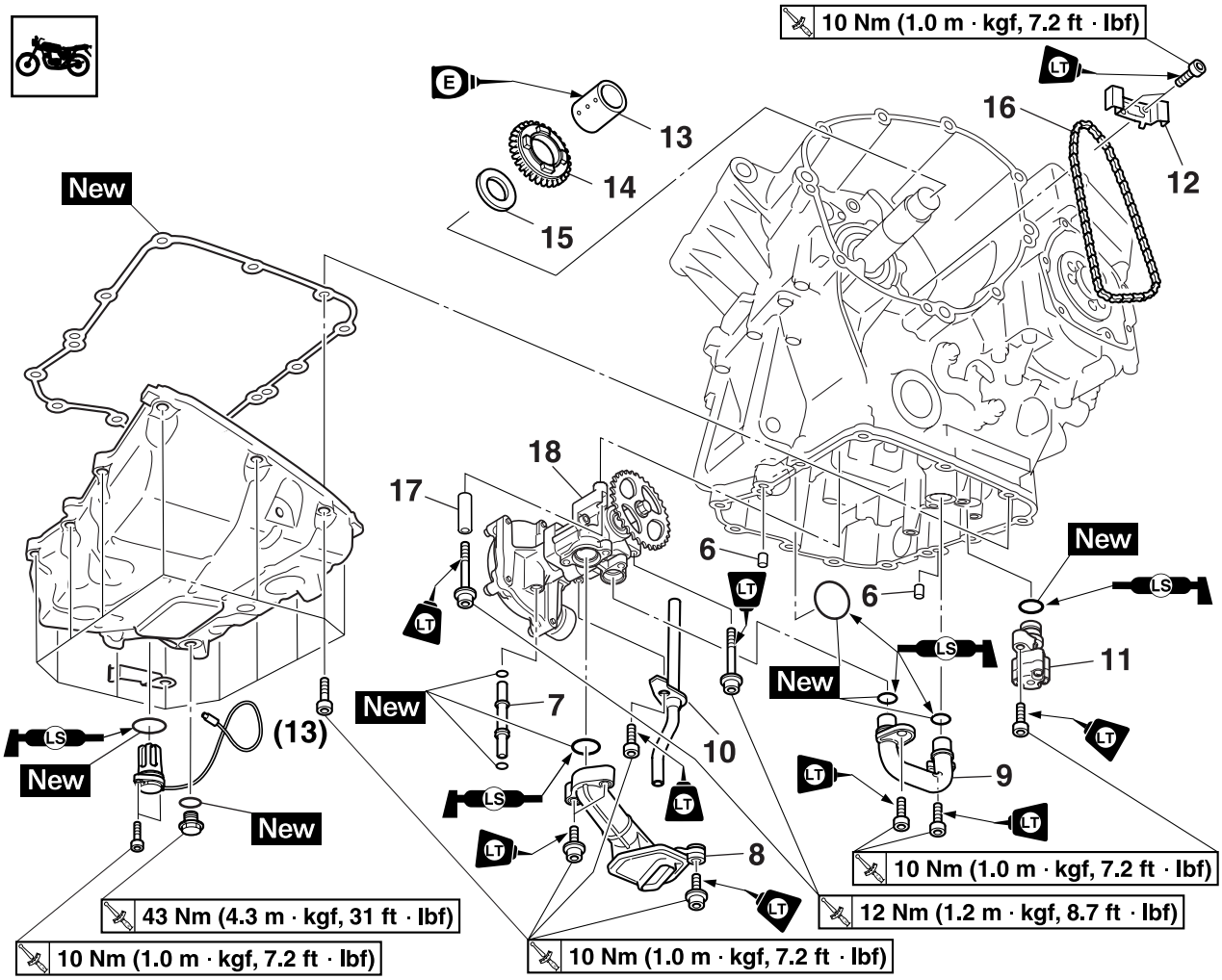

Order	Job/Parts to remove	Q'ty	Remarks
6	Dowel pin	2	
7	Drain pipe	1	
8	Oil strainer	1	
9	Oil pipe	1	
10	Oil delivery pipe 1	1	
11	Relief valve assembly	1	
12	Oil/water pump assembly drive chain guide	1	
13	Collar	1	
14	Oil/water pump assembly drive sprocket	1	
15	Washer	1	
16	Oil/water pump assembly drive chain	1	
17	Dowel pin	1	
18	Oil/water pump assembly	1	
			For installation, reverse the removal procedure

Disassembling the oil pump

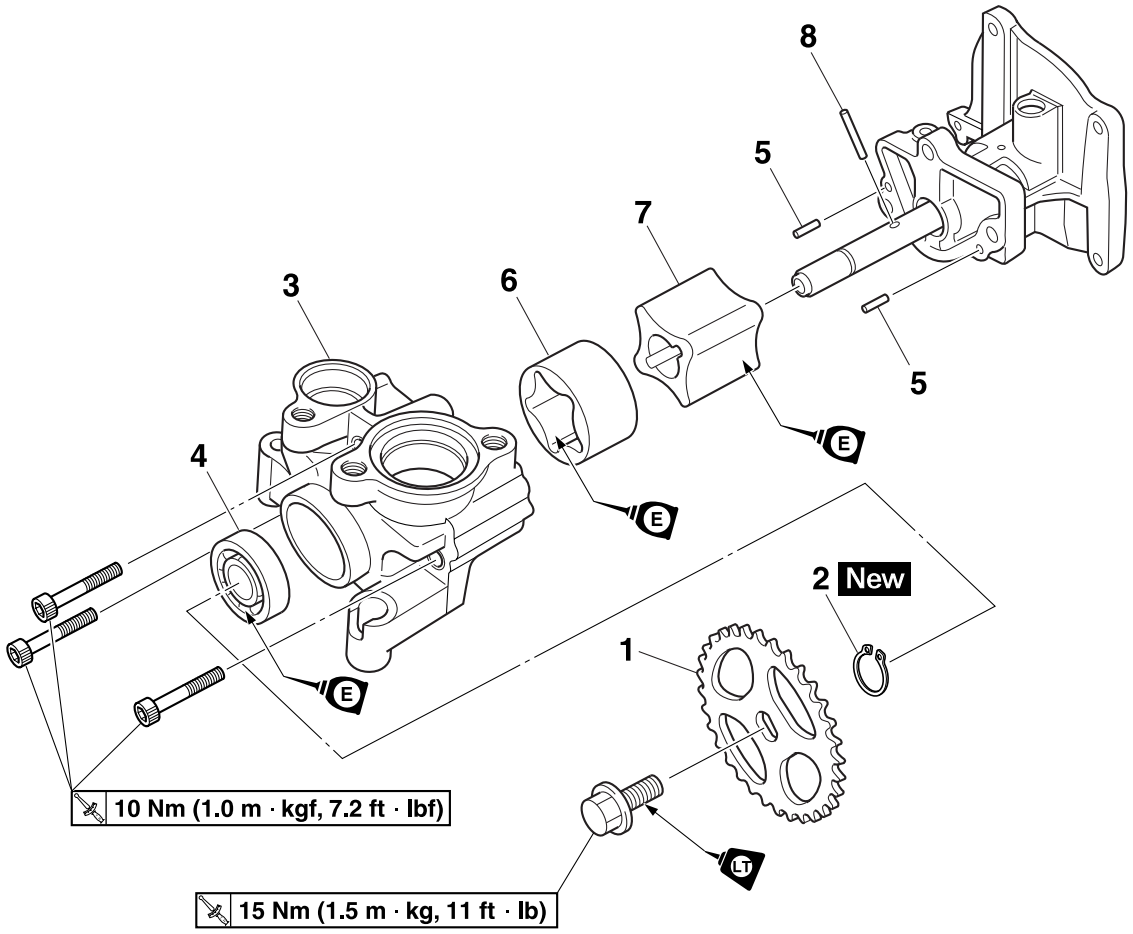

Order	Job/Parts to remove	Q'ty	Remarks
1	Oil/water pump driven sprocket	1	
2	Circlip	1	
3	Oil pump housing	1	
4	Bearing	1	
5	Dowel pin	2	
6	Oil pump outer rotor	1	
7	Oil pump inner rotor	1	
8	Pin	1	
			For installation, reverse the removal procedure.

EAS24930
REMOVING THE OIL PAN

1. Remove:
   - Oil level switch “1”
   - Oil level switch lead holder “2”
   - Oil pan “3”
   - Gasket
   - Dowel pins

TIP

Loosen each bolt 1/4 of a turn at a time, in stages and in a crisscross pattern. After all of the bolts are fully loosened, remove them.

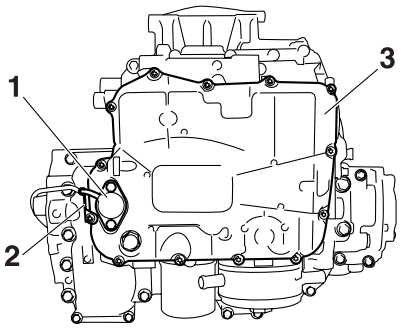

EAS14B1021
CHECKING THE SPROCKET AND CHAIN

1. Check:
   - Oil/water pump assembly drive sprocket
     Cracks/damage/wear → Replace.

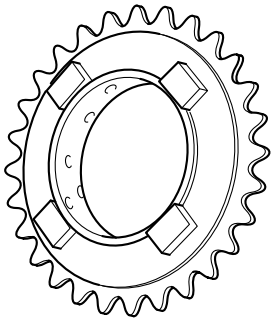

2. Check:
   - Oil/water pump assembly drive chain
     Damage/stiffness → Replace the oil/water pump assembly drive chain and oil/water pump assembly drive sprocket as a set.

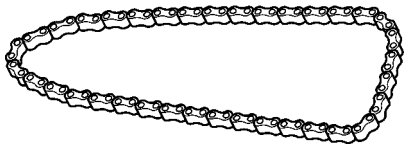

EAS24960
CHECKING THE OIL PUMP

1. Check:
   - Oil pump driven gear “1”
     Cracks/damage/wear → Replace.
   - Oil pump housing “2”
     Cracks/damage/wear → Replace the oil/water pump assembly.

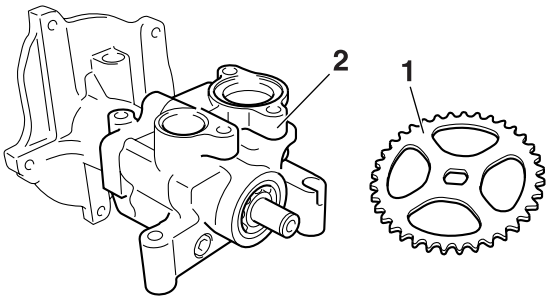

2. Measure:
   - Inner-rotor-to-outer-rotor-tip clearance “a”
   - Outer-rotor-to-oil-pump-housing clearance “b”
   - Oil-pump-housing-to-inner-rotor-and-outer-rotor clearance “c”
     Out of specification → Replace the oil/water pump assembly.

Inner-rotor-to-outer-rotor-tip clearance
Less than 0.12 mm (0.0047 in)
Limit
0.20 mm (0.0079 in)
Outer-rotor-to-oil-pump-housing clearance
0.090–0.190 mm (0.0035–0.0075 in)
Limit
0.260 mm (0.0102 in)
Oil-pump-housing-to-inner-and-outer-rotor clearance
0.06–0.13 mm (0.0024–0.0051 in)
Limit
0.200 mm (0.0079 in)

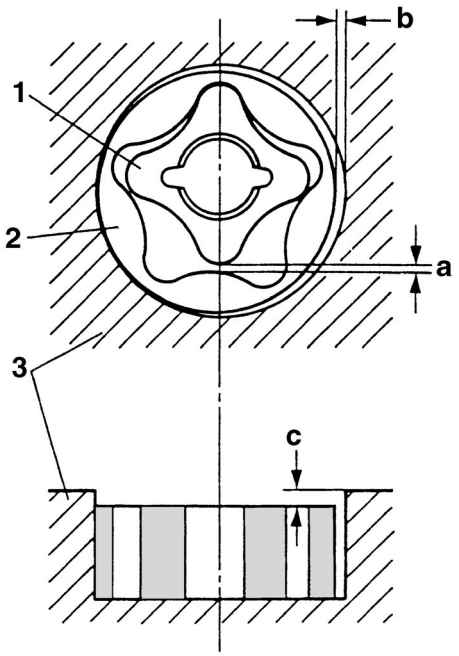

1. Inner rotor
2. Outer rotor
3. Oil pump housing

3. Check:
   - Oil pump operation
     Rough movement → Repeat steps (1) and (2) or replace the defective part(s).

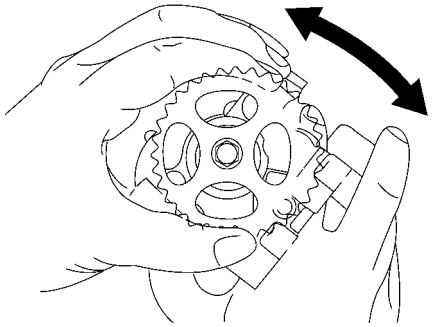

EAS24970
CHECKING THE RELIEF VALVE
1. Check:
   - Relief valve body “1”
   - Relief valve “2”
   - Spring “3”
   - Damage/wear → Replace the defective part(s).

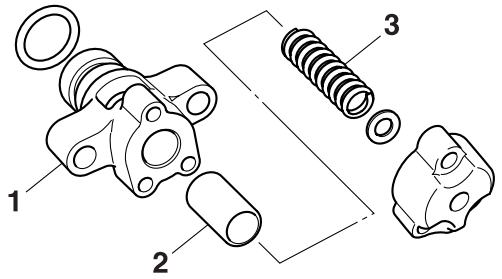

EAS24980
CHECKING THE OIL DELIVERY PIPES
The following procedure applies to all of the oil delivery pipes.
1. Check:
   - Oil delivery pipe 1 “1”
   - Oil pipe “2”
     Damage → Replace.
     Obstruction → Wash and blow out with compressed air.

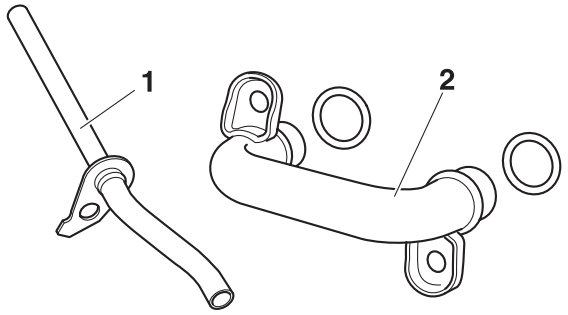

EAS24990
CHECKING THE OIL STRAINER
1. Check:
   - Oil strainer “1”
     Damage → Replace.
     Contaminants → Clean with solvent.

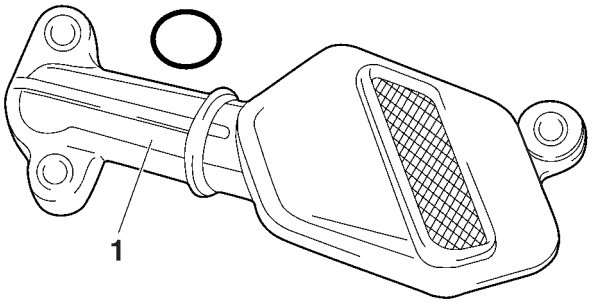

EAS25010
ASSEMBLING THE OIL PUMP
1. Lubricate:
   - Inner rotor
   - Outer rotor
   - Oil pump shaft
     (with the recommended lubricant)

Recommended lubricant
Engine oil

2. Install:
   - Pin “1”
   - Inner rotor “2”
   - Outer rotor “3”
   - Oil pump housing “4”
   - Oil pump housing bolt

Oil pump housing bolt
10 Nm (1.0 m·kgf, 7.2 ft·lbf)

TIP
When installing the inner rotor, align the pin “1” in the oil pump shaft with the groove “a” in the inner rotor “2”.

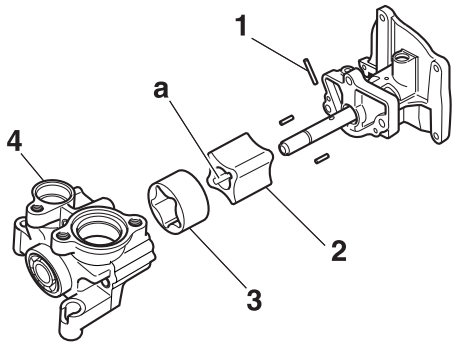

3. Install:
   - Oil/water pump driven sprocket “1”

Oil/water pump driven sprocket bolt
15 Nm (1.5 m·kgf, 11 ft·lbf)
LOCTITE®

TIP
“14B” mark of the oil/water pump driven gear is installed at oil pump side.

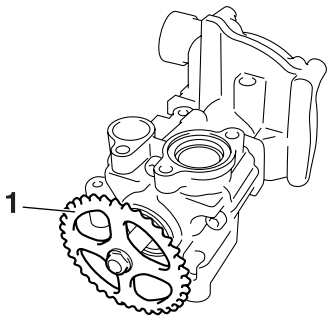

4. Check:
   - Oil pump operation
     Refer to “CHECKING THE OIL PUMP” on page 5-54.

EAS25030
INSTALLING THE OIL/WATER PUMP ASSEMBLY

1. Install:
   - O-ring New
     (onto the lower crankcase)
   - Oil/water pump assembly “1”
   - Dowel pin
   - Bolts “2”

Oil/water pump assembly bolt
12 Nm (1.2 m·kgf, 8.7 ft·lbf)
LOCTITE®

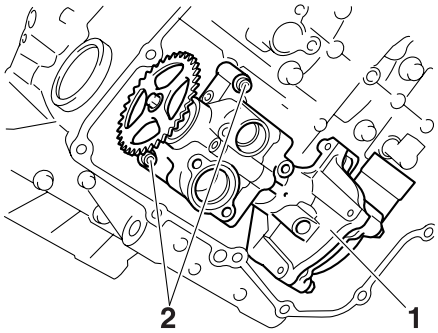

2. Install:
   - Washer
   - Oil/water pump assembly drive chain “1”
   - Oil/water pump assembly drive sprocket “2”
   - Collar

TIP
Install the oil/water pump assembly drive chain “1” onto the oil/water pump assembly drive sprocket “2”.

ECA14B1018
NOTICE
After installing the oil/water pump assembly drive chain and drive sprocket, make sure the oil/water pump turns smoothly.

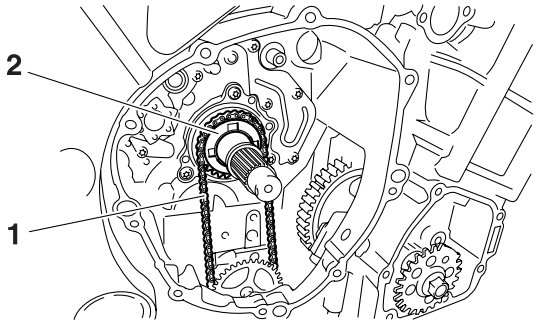

3. Install:
   - Oil/water pump assembly drive chain guide “1”

Oil/water pump assembly drive chain guide bolt
10 Nm (1.0 m·kgf, 7.2 ft·lbf)
LOCTITE®

TIP

“UP” mark of the oil/water pump assembly drive chain guide is upward.

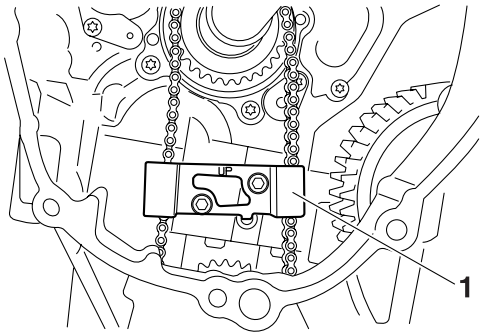

4. Install:
   - Oil delivery pipe 1 “1”

Oil delivery pipe 1 bolt
10 Nm (1.0 m·kgf, 7.2 ft·lbf)
LOCTITE®

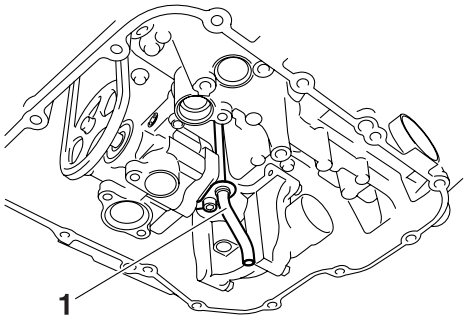

5. Install:
   - Relief valve assembly “1”
   - O-ring New

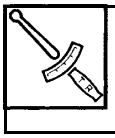

Relief valve assembly bolt
10 Nm (1.0 m·kgf, 7.2 ft·lbf)
LOCTITE®

   - Oil strainer “2”
   - O-ring New

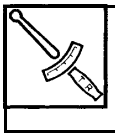

Oil strainer bolt
10 Nm (1.0 m·kgf, 7.2 ft·lbf)
LOCTITE®

   - Oil pipe “3”
   - O-rings New

Oil pipe bolt
10 Nm (1.0 m·kgf, 7.2 ft·lbf)
LOCTITE®

   - Drain pipe “4”
   - O-rings New

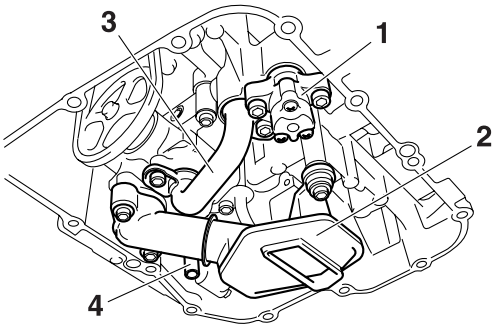

EAS25050

INSTALLING THE OIL PAN

1. Install:
   - Dowel pins
   - Oil pan gasket New
   - Oil pan
   - Oil level switch lead holder
   - Oil level switch
   - O-ring New

Oil pan bolt
10 Nm (1.0 m·kgf, 7.2 ft·lbf)
Oil level switch bolt
10 Nm (1.0 m·kgf, 7.2 ft·lbf)

   - Engine oil drain bolt
   - Gasket New

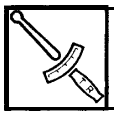	**Engine oil drain bolt** **43 Nm (4.3 m·kgf, 31 ft·lbf)**

TIP

Tighten the oil pan bolts in stages and in a crisscross pattern.

EAS25061
CLUTCH

Removing the clutch cover

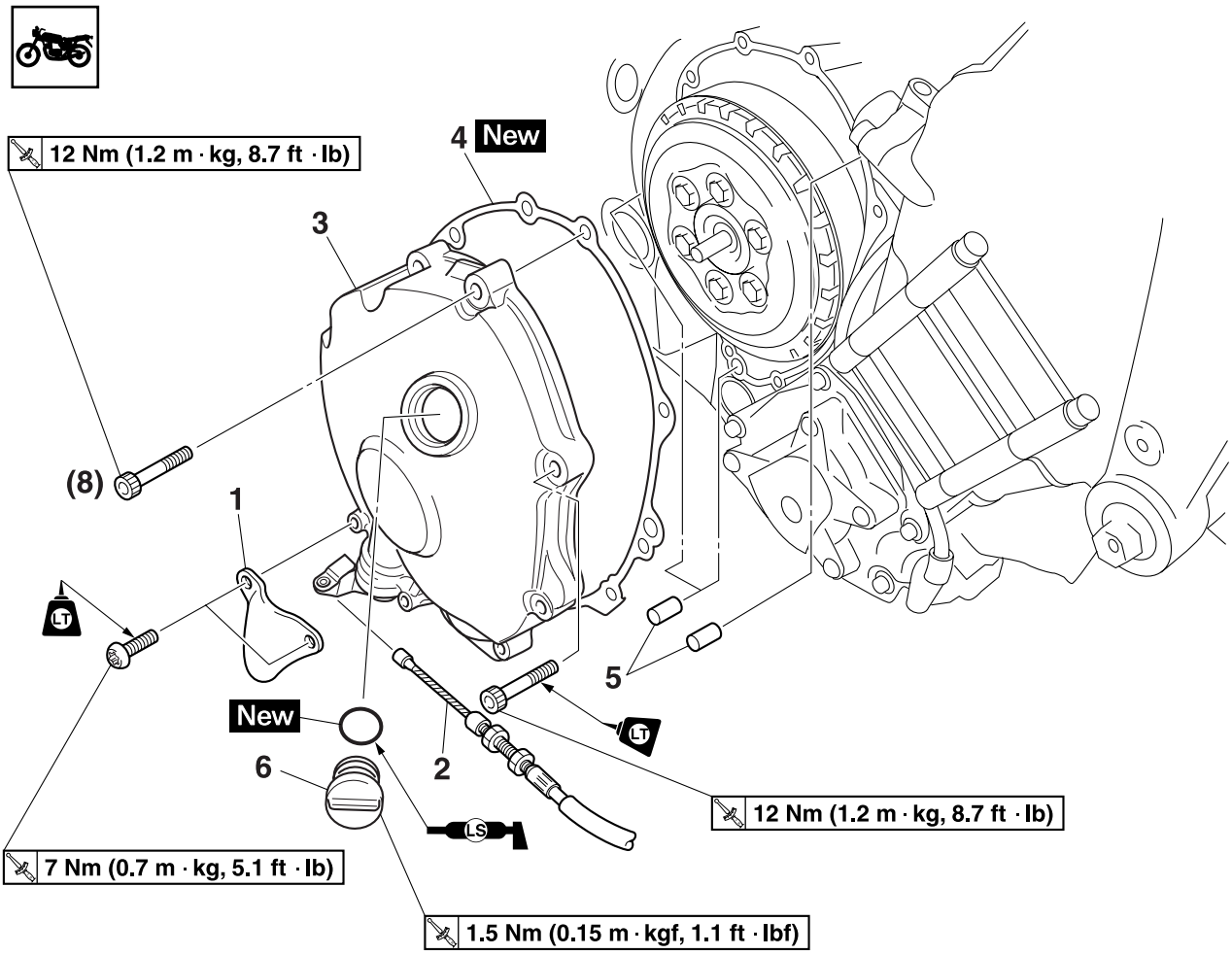

Order	Job/Parts to remove	Q'ty	Remarks
	Engine oil		Drain.
1	Pull lever cover	1	
2	Clutch cable	1	Disconnect.
3	Clutch cover	1	
4	Clutch cover gasket	1	
5	Dowel pin	3	
6	Oil filler cap	1	
			For installation, reverse the removal procedure.

Removing the pull lever shaft

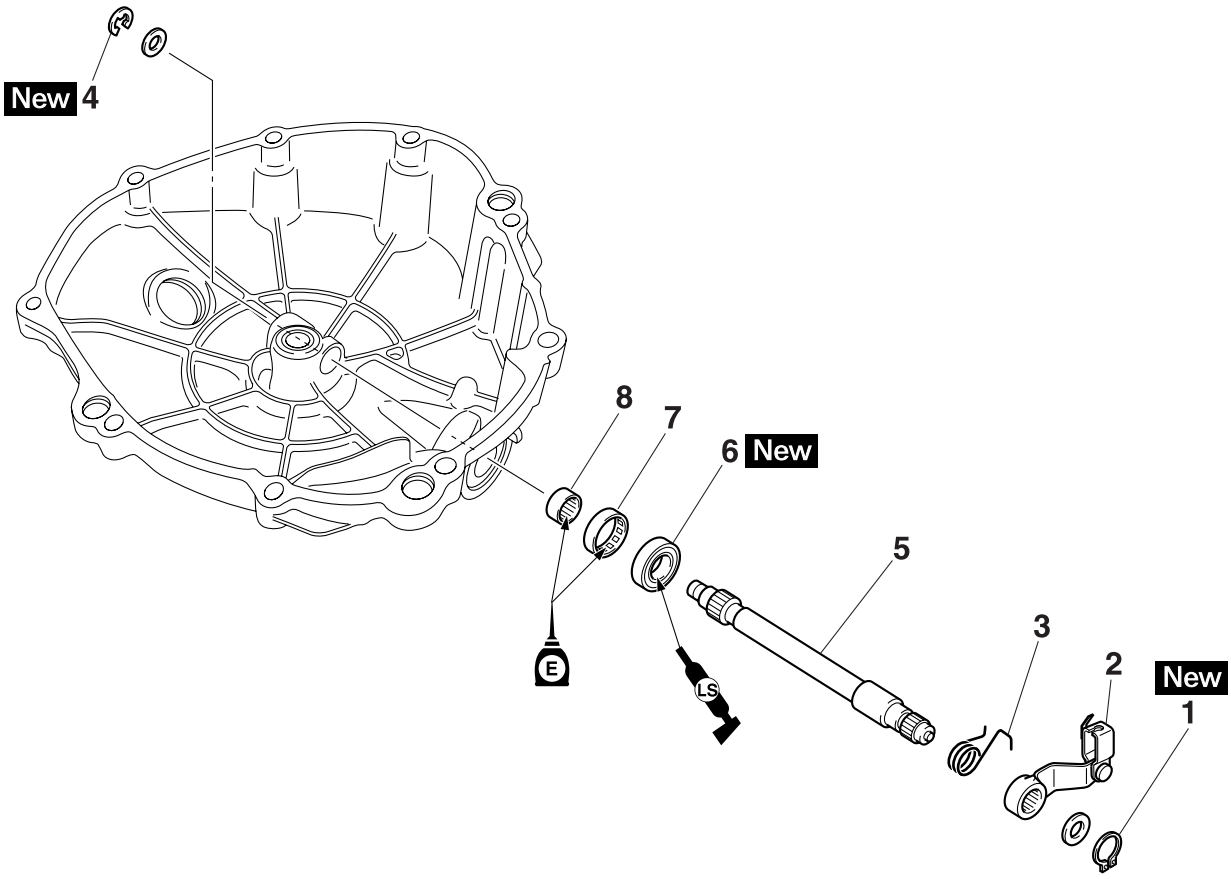

Order	Job/Parts to remove	Q'ty	Remarks
1	Circlip	1	
2	Pull lever	1	
3	Pull lever spring	1	
4	Circlip	1	
5	Pull lever shaft	1	
6	Oil seal	1	
7	Bearing	1	
8	Bearing	1	
			For installation, reverse the removal procedure.

Removing the clutch

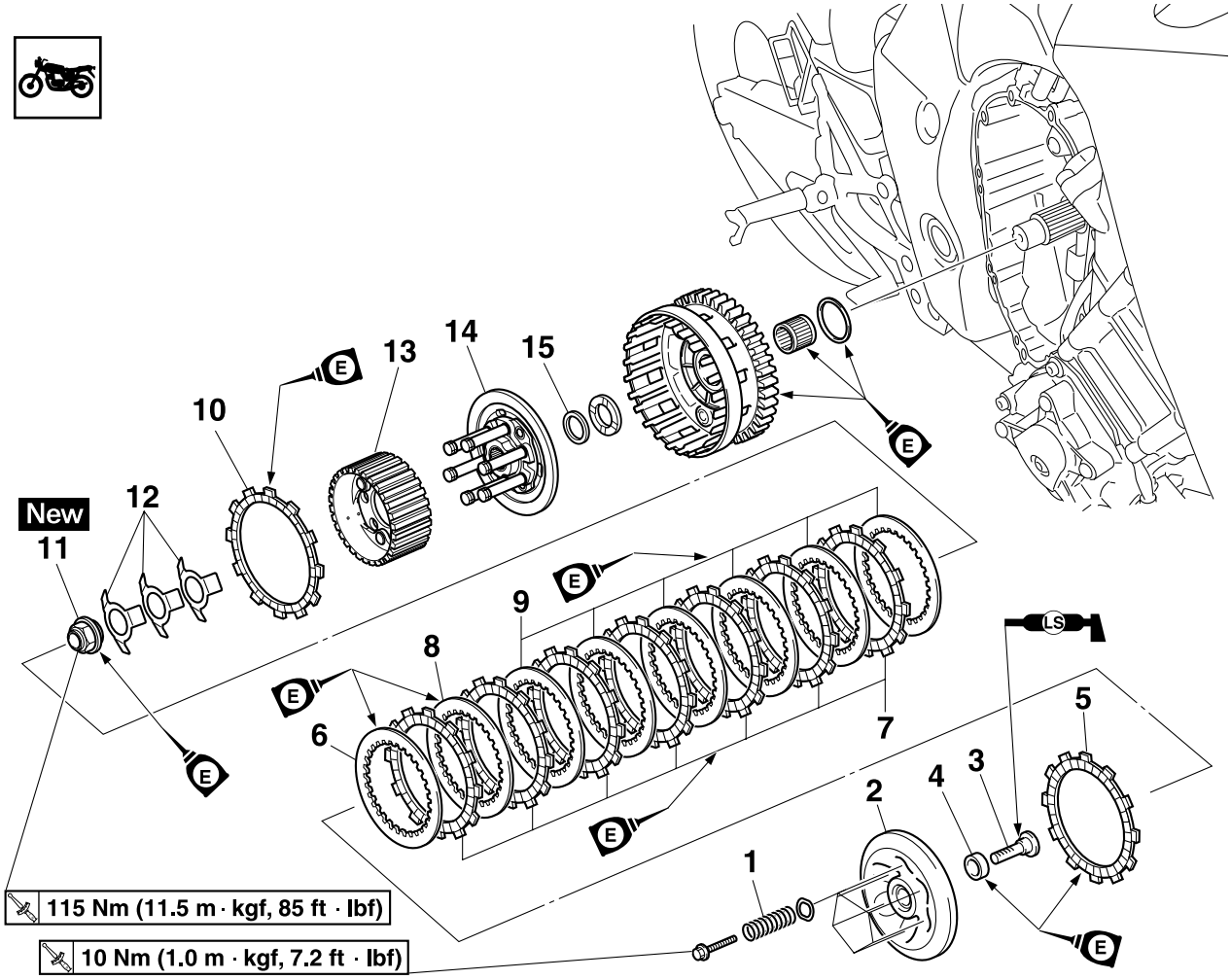

Order	Job/Parts to remove	Q'ty	Remarks
1	Compression spring	6	
2	Pressure plate 1	1	
3	Pull rod	1	
4	Bearing	1	
5	Friction plate 1	1	
6	Clutch plate 1	1	
7	Friction plate 2	7	
8	Clutch plate 2	1	
9	Clutch plate 3	6	
10	Friction plate 1	1	
11	Clutch boss nut	1	
12	Spring	3	
13	Clutch boss	1	
14	Pressure plate 2	1	
15	Conical spring washer	1	

Removing the clutch

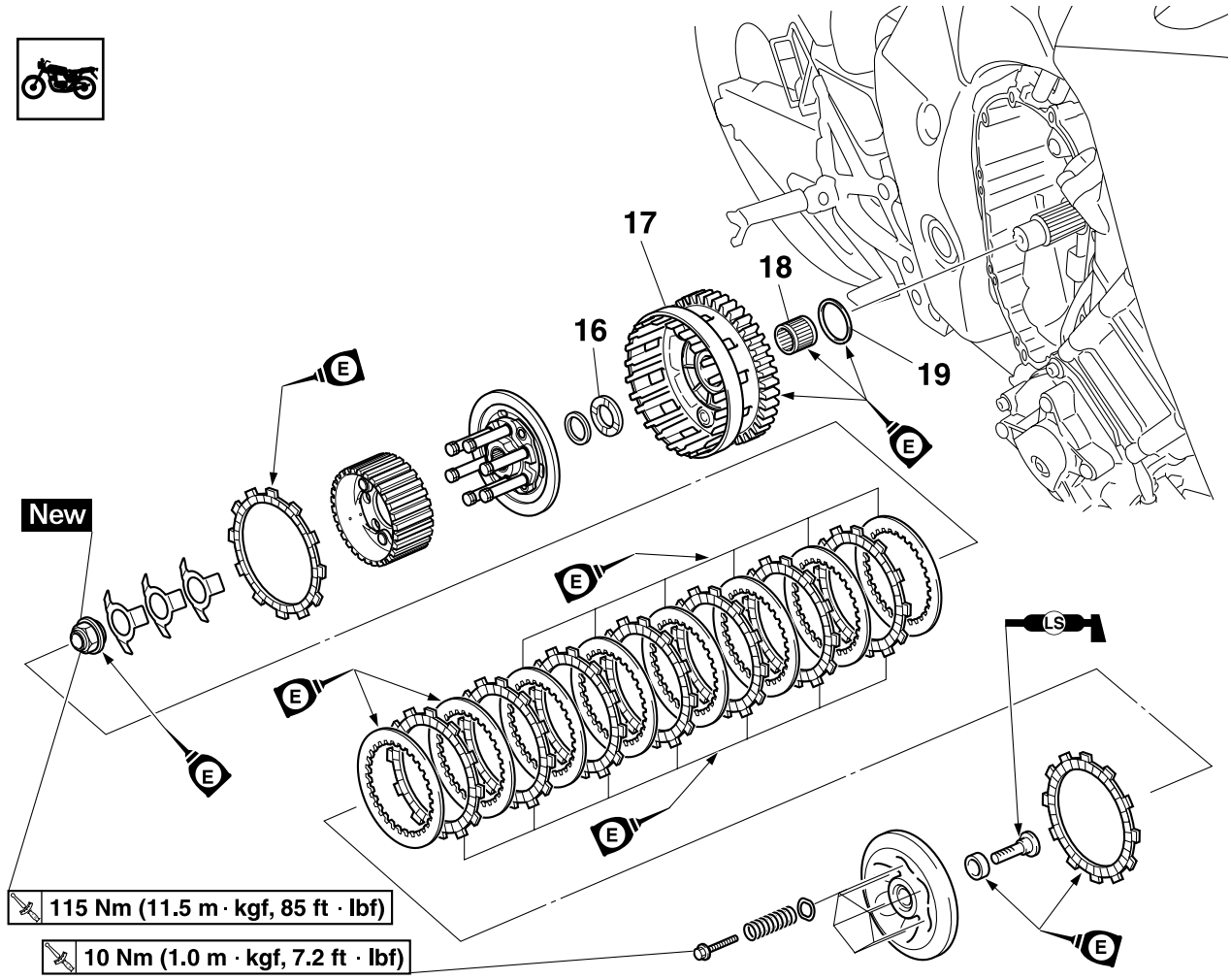

Order	Job/Parts to remove	Q'ty	Remarks
16	Thrust washer	1	
17	Clutch housing assembly	1	
18	Bearing	1	
19	Washer	1	
			For installation, reverse the removal procedure.

EAS25080
REMOVING THE CLUTCH

1. Remove:
   - Pull lever cover “1”
   - Clutch cover “2”
   - Gasket

TIP

Loosen each bolt 1/4 of a turn at a time, in stages and in a crisscross pattern.
After all of the bolts are fully loosened, remove them.

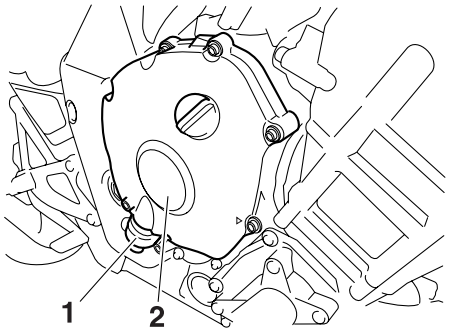

2. Remove:
   - Compression spring bolts “1”
   - Compression springs
   - Pressure plate 1 “2”
   - Pull rod “3”

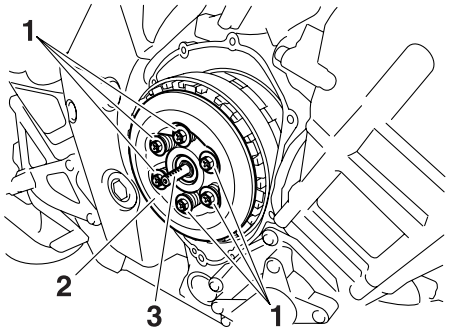

3. Remove:
   - Friction plate 1 “1”

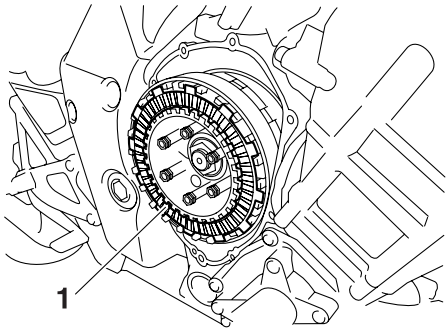

4. Remove:
   - Clutch plate 1 “1”
   - Friction plate 2
   - Clutch plate 2
   - Clutch plate 3

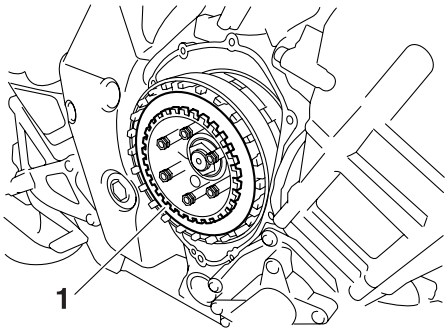

5. Straighten the clutch boss nut rib “a”.

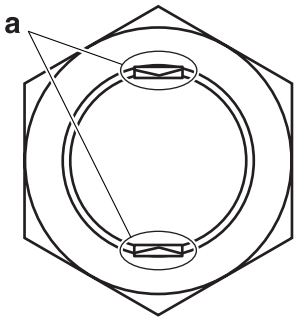

6. Loosen:
   - Clutch boss nut “1”

TIP

While holding the clutch boss “2” with the universal clutch holder “3”, loosen the clutch boss nut.

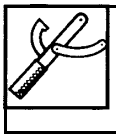

Universal clutch holder
90890-04086
YM-91042

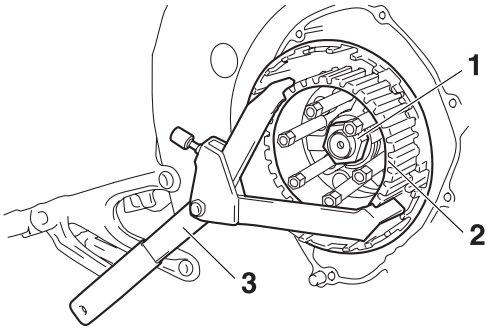

7. Remove:
   - Clutch boss nut
   - Springs
   - Clutch boss

- Pressure plate 2
- Conical spring washer
- Thrust washer
- Clutch housing assembly

EAS25100
CHECKING THE FRICTION PLATES

The following procedure applies to all of the friction plates.

1. Check:
   - Friction plate
     Damage/wear → Replace the friction plates as a set.
2. Measure:
   - Friction plate thickness
     Out of specification → Replace the friction plates as a set.

TIP

Measure the friction plate at four places.

	Friction plate thickness **2.92–3.08 mm (0.115–0.121 in)** **Wear limit** **2.82 mm (0.111 in)**

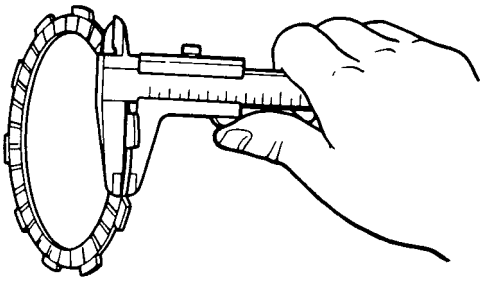

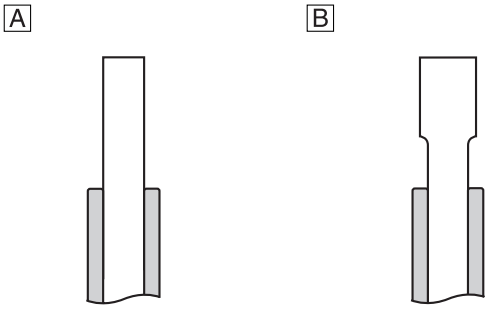

A. Friction plate 1
B. Friction plate 2

EAS25110
CHECKING THE CLUTCH PLATES

The following procedure applies to all of the clutch plates.

1. Check:
   - Clutch plate
     Damage → Replace the clutch plates as a set.
2. Measure:
   - Clutch plate warpage
     (with a surface plate and thickness gauge "1")
     Out of specification → Replace the clutch plates as a set.

	Warpage limit **0.10 mm (0.0039 in)**

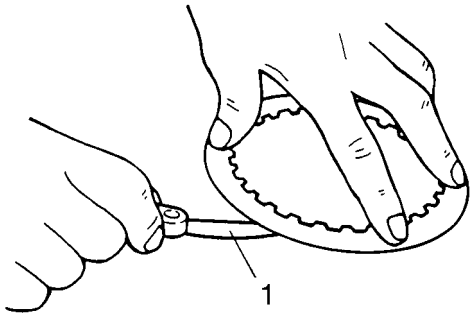

3. Measure:
   - assembly width "a" of the friction plates and clutch plates
     Out of specification → Adjust.

	Assembly width **42.4–43.0 mm (1.67–1.69 in)**

TIP

- Perform the thickness measurement without applying the oil.
- This step should be performed only if the friction plates and clutch plates were replaced.
- To measure the total width of the friction plates and clutch plates, combine 9 friction plates and 8 clutch plates as shown.

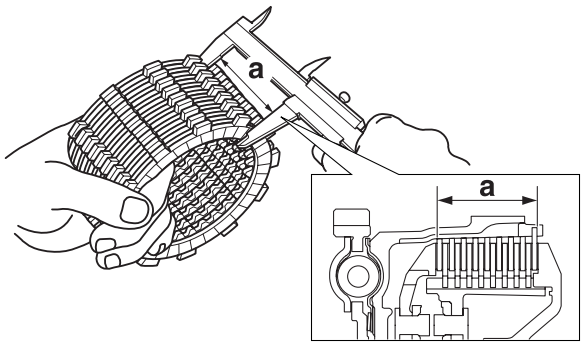

▼▼▼▼▼▼▼▼▼▼▼▼▼▼▼▼▼▼▼▼▼▼▼▼▼▼▼▼▼▼▼▼▼▼

a. Assembly width adjusted by clutch plate “1” and “2”.
b. Select the clutch plate from the following table.

Clutch plate “1”		
Part No.	**Thickness**	
4B1-16324-00	1.6 mm (0.063 in)	
5VY-16325-00	2.0 mm (0.079 in)	STD
4B1-16325-00	2.3 mm (0.091 in)	

Clutch plate “2”		
Part No.	**Thickness**	
5VY-16325-00	2.0 mm (0.079 in)	STD
4B1-16325-00	2.3 mm (0.091 in)	

TIP

When adjusting the clutch assembly width [by replacing the clutch plate(s)], be sure to replace the clutch plate “1” fast.
After replacing the clutch plate “1”, if specifications cannot be met, replace the clutch plate “2”.

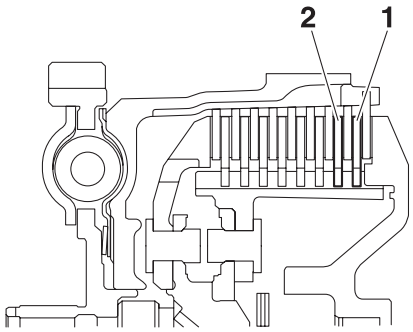

▲▲▲▲▲▲▲▲▲▲▲▲▲▲▲▲▲▲▲▲▲▲▲▲▲▲▲▲▲▲▲▲▲▲

EAS25140

CHECKING THE CLUTCH SPRINGS

The following procedure applies to all of the clutch springs.

1. Check:
   - Clutch spring
     Damage → Replace the clutch springs as a set.
2. Measure:
   - Clutch spring free length “a”
     Out of specification → Replace the clutch springs as a set.

Clutch spring free length
43.80 mm (1.72 in)
Limit
41.61 mm (1.64 in)

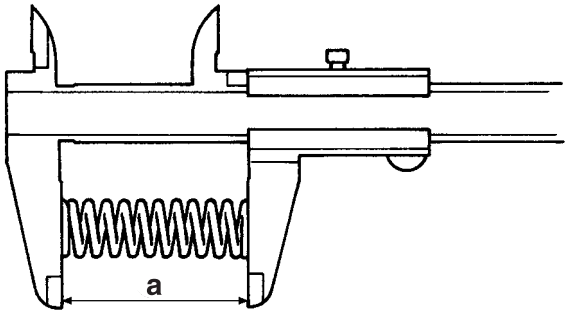

EAS25150

CHECKING THE CLUTCH HOUSING

1. Check:
   - Clutch housing dogs
     Damage/pitting/wear → Deburr the clutch housing dogs or replace the clutch housing.

TIP

Pitting on the clutch housing dogs will cause erratic clutch operation.

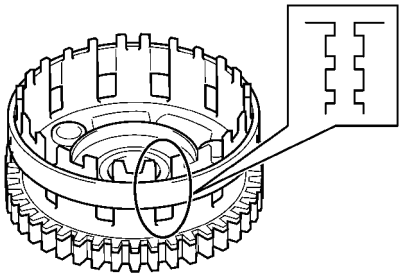

2. Check:
   - Bearing
     Damage/wear → Replace the bearing and clutch housing.

EAS25160

CHECKING THE CLUTCH BOSS

1. Check:
   - Clutch boss splines
     Damage/pitting/wear → Replace the clutch boss.

TIP

Pitting on the clutch boss splines will cause erratic clutch operation.

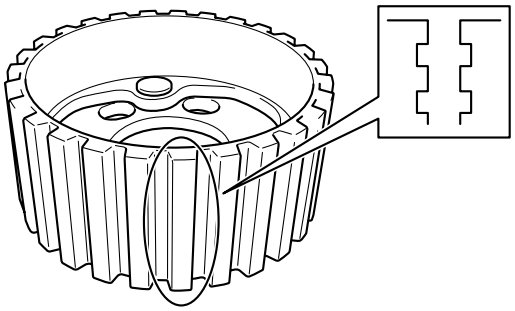

EAS25170
CHECKING THE PRESSURE PLATE
1. Check:
   - Pressure plate 1 “1”
   - Pressure plate 2 “2”
     Cracks/damage → Replace.
   - Bearing “3”
     Damage/wear → Replace.

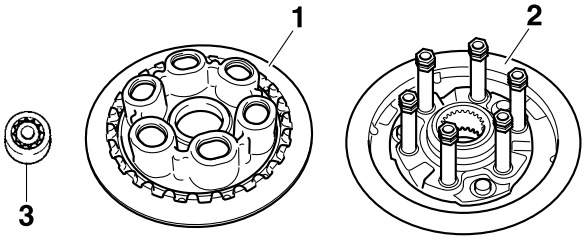

EAS25200
CHECKING THE PRIMARY DRIVE GEAR
1. Check:
   - Primary drive gear
     Damage/wear → Replace the crankshaft and clutch housing as a set.
     Excessive noise during operation → Replace the crankshaft and clutch housing as a set.

EAS25210
CHECKING THE PRIMARY DRIVEN GEAR
1. Check:
   - Primary driven gear “1”
     Damage/wear → Replace the clutch housing and crankshaft as a set.
     Excessive noise during operation → Replace the clutch housing and crankshaft as a set.

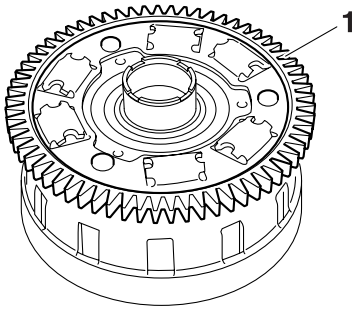

EAS25220
CHECKING THE PULL LEVER SHAFT AND PULL ROD
1. Check:
   - Pull lever shaft pinion gear teeth “1”
   - Pull rod teeth “2”
     Damage/wear → Replace the pull rod and pull lever shaft as a set.

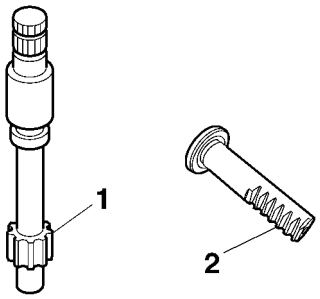

2. Check:
   - Pull rod bearing
     Damage/wear → Replace.

EAS25240
INSTALLING THE CLUTCH
1. Install:
   - Washer
   - Bearing
   - Clutch housing assembly “1”
   - Thrust washer
   - Conical spring washer

ECA14B1019

NOTICE

Make sure to fit the projections “a” of the oil pump drive sprocket to the concave “b” of the clutch housing assembly.

TIP

When installing the clutch housing assembly, turn the crankshaft so that the crankshaft web “c” cannot be seen.

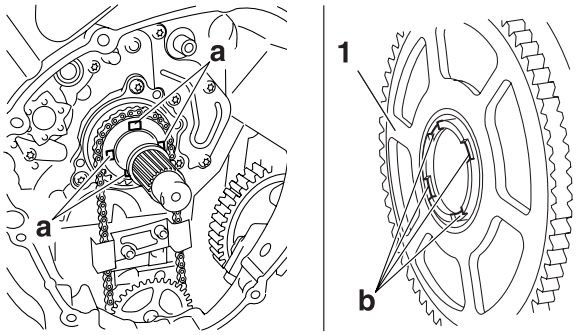

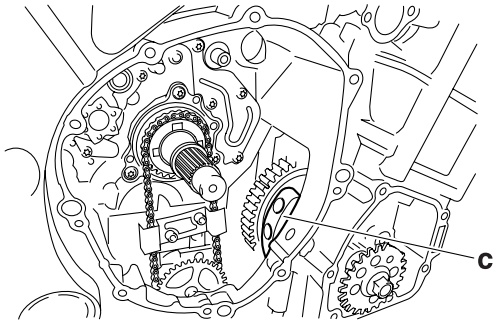

2. Install:
   - Pressure plate 2 “1”
   - Clutch boss “2”

TIP

Fit the groove “a” of the pressure plate 2 to the projection “b” of the clutch boss to assemble.

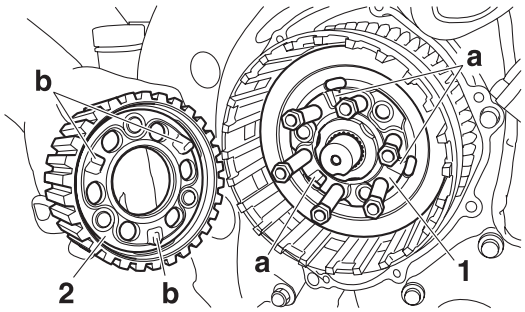

3. Install:
   - Springs “1”
   - Clutch boss nut “2” New

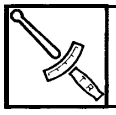	**Clutch boss nut** **115 Nm (11.5 m·kgf, 85 ft·lbf)**

TIP

- Lubricate the clutch boss nut threads with engine oil.
- While holding the clutch boss “3” with the universal clutch holder “4”, tighten the clutch boss nut.
- Stake the clutch boss nut at a cutout “a” in the main axle.

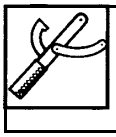	**Universal clutch holder** **90890-04086** **YM-91042**

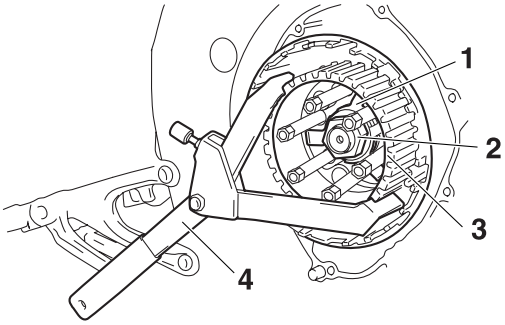

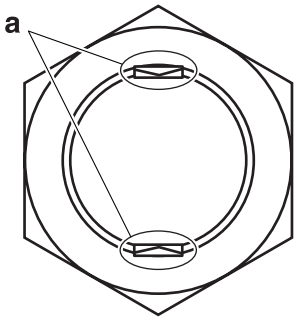

4. Lubricate:
   - Friction plates
   - Clutch plates
   (with the recommended lubricant)

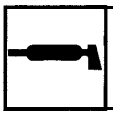	**Recommended lubricant** **Engine oil**

5. Install:
   - Friction plates
   - Clutch plates

TIP

- First, install a friction plate and then alternate between a clutch plate and a friction plate.
- Install the last friction plate “1” offset from the other friction plates “2”, making sure to align a projection on the friction plate with the punch mark “a” on the clutch housing.

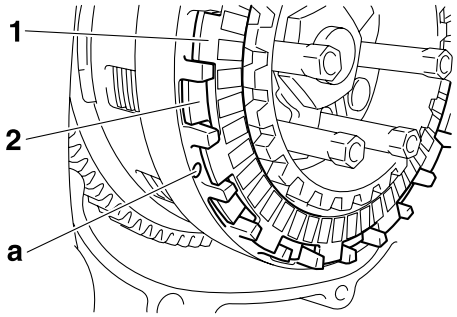

6. Install:
   - Bearing
     (into the pressure plate 1)
   - Pull rod
   - Pressure plate 1
7. Install:
   - Clutch springs
   - Clutch spring bolts “1”

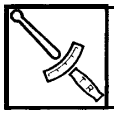	**Clutch spring bolt** **10 Nm (1.0 m·kgf, 7.2 ft·lbf)**

TIP

Tighten the clutch spring bolts in stages and in a crisscross pattern.

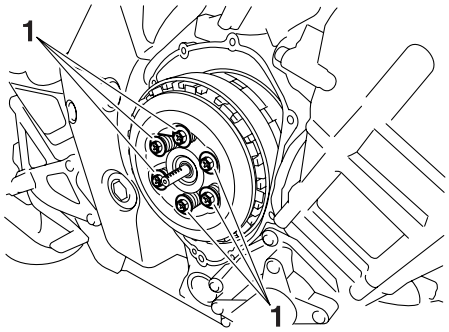

8. Install:
   - Dowel pins
   - Clutch cover gasket New
   - Clutch cover “1”

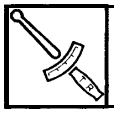	**Clutch cover bolt** **12 Nm (1.2 m·kgf, 8.7 ft·lbf)**

TIP

- Position the pull rod so that the teeth “a” face towards the rear of the vehicle. Then, install the clutch cover.
- Apply locking agent (LOCTITE®) to the threads of only the clutch cover bolts “b” shown in the illustration.
- Tighten the clutch cover bolts in stages and in a crisscross pattern.

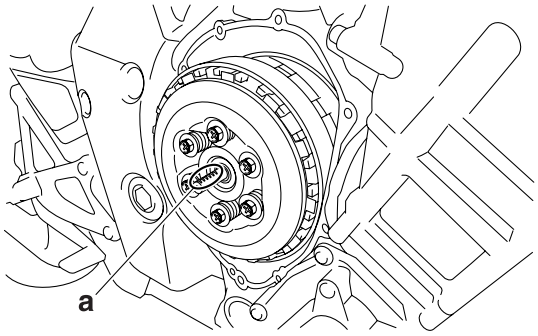

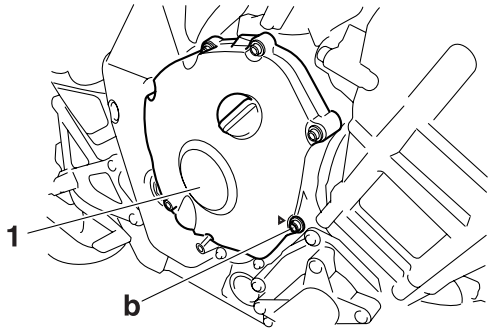

9. Install:
   - Pull lever spring “1”
   - Pull lever “2”
   - Washer
   - Circlip New

TIP

- Make sure that the mark “a” on the pull lever is facing down.
- The end of the pull lever should be closest to the clutch cover match mark “b” when there is no free play of the pull lever.
- Make sure that the pull rod teeth and pull lever shaft pinion gear are engaged.

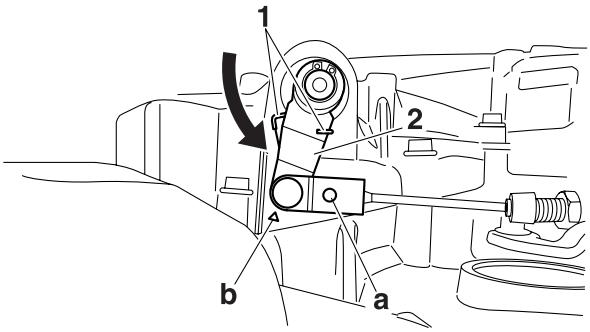

10. Adjust:
    - Clutch cable free play
      Refer to “ADJUSTING THE CLUTCH CABLE FREE PLAY” on page 3-13.

EAS25410

SHIFT SHAFT

Removing the shift shaft and stopper lever

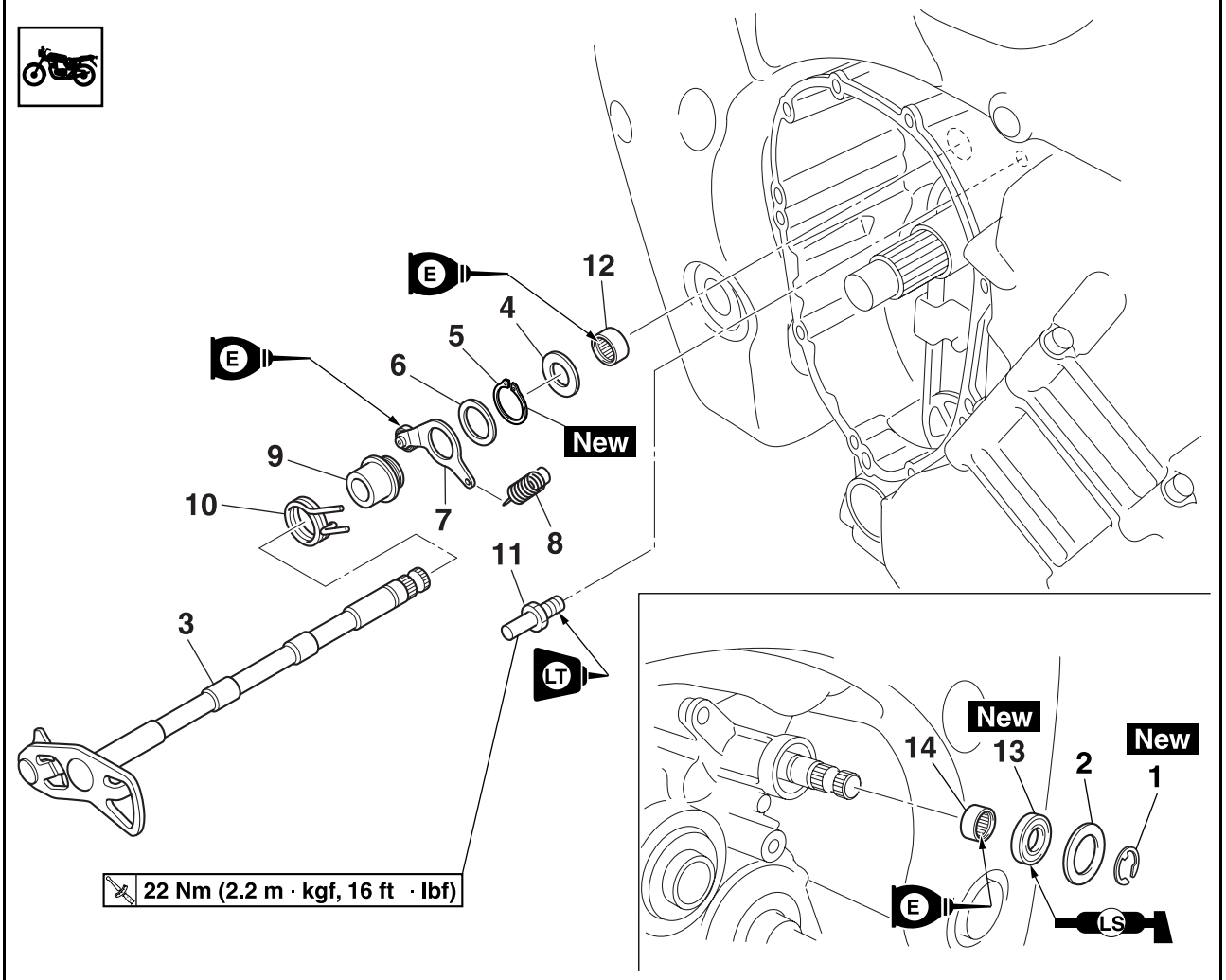

Order	Job/Parts to remove	Q'ty	Remarks
	Shift arm		Refer to "CHAIN DRIVE" on page 4-84.
	Clutch assembly		Refer to "CLUTCH" on page 5-59.
1	Circlip	1	
2	Washer	1	
3	Shift shaft	1	
4	Washer	1	
5	Circlip	1	
6	Washer	1	
7	Stopper lever	1	
8	Stopper lever spring	1	
9	Collar	1	
10	Shift shaft spring	1	
11	Shift shaft spring stopper	1	
12	Bearing	1	
13	Oil seal	1	
14	Bearing	1	
			For installation, reverse the removal procedure.

EAS25420
CHECKING THE SHIFT SHAFT

1. Check:
   - Shift shaft “1”
     Bends/damage/wear → Replace.
   - Shift shaft spring “2”
   - Collar
     Damage/wear → Replace.

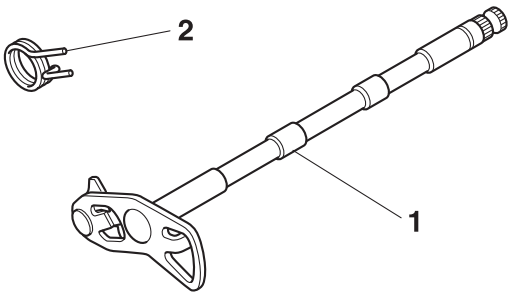

EAS25430
CHECKING THE STOPPER LEVER

1. Check:
   - Stopper lever
     Bends/damage → Replace.
     Roller turns roughly → Replace the stopper lever.

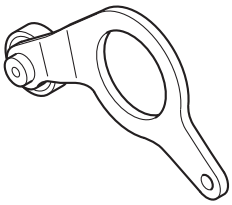

EAS25450
INSTALLING THE SHIFT SHAFT

1. Install:
   - Shift shaft spring stopper “1”
   - Shift shaft assembly
   - Stopper lever spring “2”

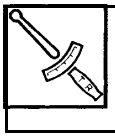

Shift shaft spring stopper
22 Nm (2.2 m·kgf, 16 ft·lbf)
LOCTITE®

TIP
- Lubricate the oil seal lips with lithium-soap-based grease.
- Hook the end of the shift shaft spring “3” onto the shift shaft spring stopper “1”.
- Hook the ends of the stopper lever spring “2” onto the stopper lever “4” and the crankcase boss “5”.
- Mesh the stopper lever with the shift drum segment assembly.

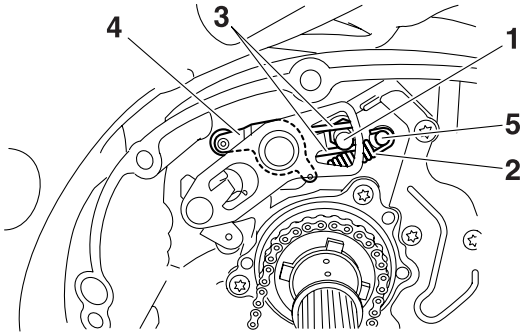

EAS25540
CRANKCASE

Separating the crankcase

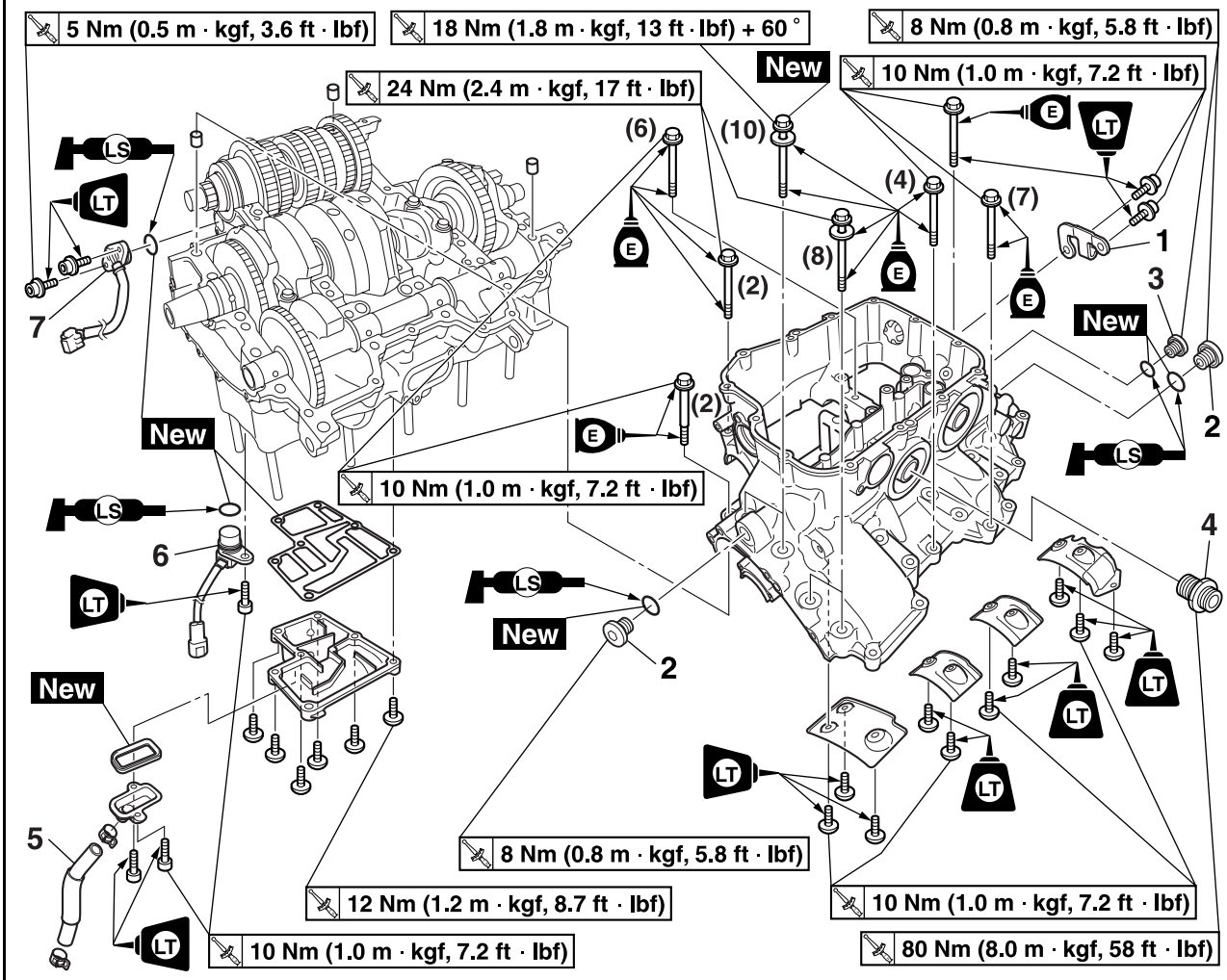

Order	Job/Parts to remove	Q'ty	Remarks
	Engine		Refer to "ENGINE REMOVAL" on page 5-3.
	Cylinder head		Refer to "CYLINDER HEAD" on page 5-25.
	Starter motor		Refer to "ELECTRIC STARTER" on page 5-46.
	Stator coil assembly		Refer to "GENERATOR" on page 5-37.
	Pickup rotor		Refer to "PICKUP ROTOR" on page 5-43.
	Clutch housing assembly		Refer to "CLUTCH" on page 5-59.
	Shift shaft assembly		Refer to "SHIFT SHAFT" on page 5-69.
	Oil/water pump assembly		Refer to "OIL PUMP" on page 5-51.
1	Clutch cable holder	1	
2	Main gallery plug 1	2	
3	Main gallery plug 2	1	
4	Union bolt	1	
5	Crankcase breather hose	1	
6	Speed sensor	1	
7	Gear position sensor	1	

Separating the crankcase

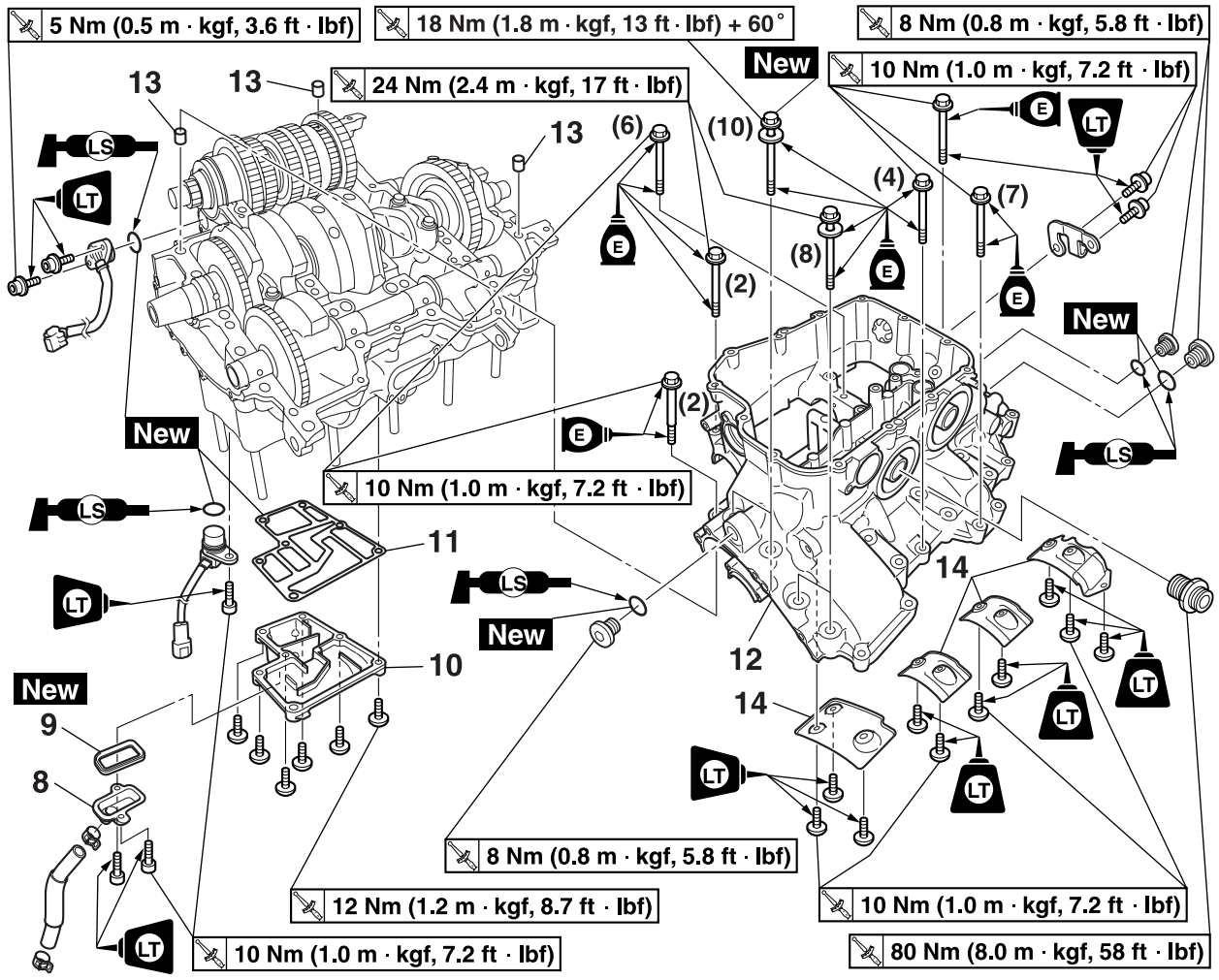

Order	Job/Parts to remove	Q'ty	Remarks
8	Crankcase breather cover	1	
9	Crankcase breather cover gasket	1	
10	Crankcase breather case	1	
11	Crankcase breather case gasket	1	
12	Lower crankcase	1	
13	Dowel pin	3	
14	Crankcase baffle plate	4	
			For installation, reverse the removal procedure.

EAS25550
DISASSEMBLING THE CRANKCASE

1. Place the engine upside down.
2. Remove:
   - Crankcase bolts

TIP
- Loosen each bolt 1/4 of a turn at a time, in stages and in a crisscross pattern. After all of the bolts are fully loosened, remove them.
- Loosen the bolts in decreasing numerical order (refer to the numbers in the illustration).
- The numbers embossed on the crankcase indicate the crankcase tightening sequence.

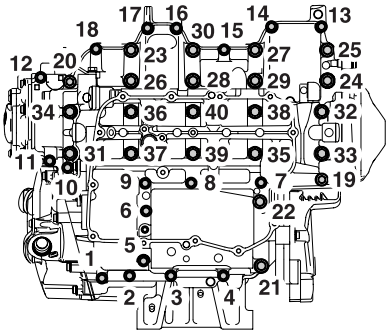

3. Remove:
   - Lower crankcase

ECA13900
NOTICE
Tap on one side of the crankcase with a soft-face hammer. Tap only on reinforced portions of the crankcase, not on the crankcase mating surfaces. Work slowly and carefully and make sure the crankcase halves separate evenly.

4. Remove:
   - Dowel pins

EAS25580
CHECKING THE CRANKCASE

1. Thoroughly wash the crankcase halves in a mild solvent.
2. Thoroughly clean all the gasket surfaces and crankcase mating surfaces.
3. Check:
   - Crankcase
     Cracks/damage → Replace.
   - Oil delivery passages
     Obstruction → Blow out with compressed air.

EAS25650
ASSEMBLING THE CRANKCASE

1. Lubricate:
   - Crankshaft journal bearings
     (with the recommended lubricant)

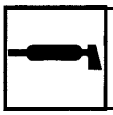

Recommended lubricant
Engine oil

2. Apply:
   - Sealant
     (onto the crankcase mating surfaces)

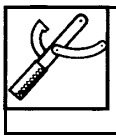

Yamaha bond No.1215
(Three Bond No.1215®)
90890-85505

TIP
Do not allow any sealant to come into contact with the oil gallery or crankshaft journal bearings. Do not apply sealant to within 2–3 mm (0.08–0.12 in) of the crankshaft journal bearings.

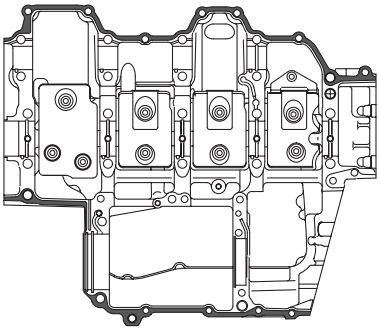

3. Install:
   - Dowel pins
4. Set the shift drum assembly and transmission gears in the neutral position.
5. Install:
   - Lower crankcase “1”
     (onto the upper crankcase “2”)

ECA13980
NOTICE
Before tightening the crankcase bolts, make sure the transmission gears shift correctly when the shift drum assembly is turned by hand.

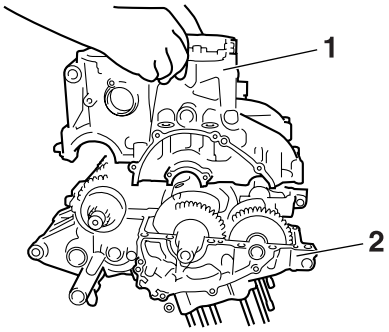

6. Install:
   - Crankcase bolts

TIP

- Lubricate the bolts “1”–“18” thread, mating surfaces and washers with engine oil.
- Lubricate the bolts “19”–“40” thread and mating surfaces with engine oil (except “31”).
- Apply LOCTITE® to the screw of the bolt “31” and engine oil to the bearing surface.

- M9 × 100 mm bolts with washers: “1”–“10”. New
- M8 × 60 mm bolts with washers: “11”–“18”.
- M8 × 60 mm bolts: “19”, “20”.
- M6 × 70 mm bolt: “31”.
- M6 × 65 mm shoulder bolts: “21”, “22”
- M6 × 60 mm bolts: “30”, “32”–“36”.
- M6 × 50 mm bolts: “23”–“25”, “27”–“29”, “40”.
- M6 × 40 mm bolts: “26”, “37”–“39”.

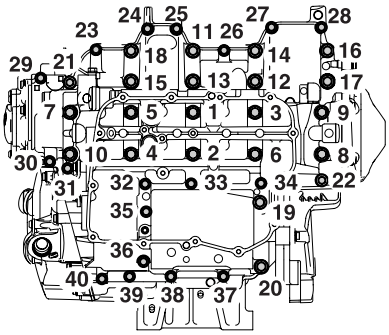

7. Tighten:
   - Crankcase bolts “1”–“10”

Crankcase bolts (M9 × 100 mm)
1st: 30 Nm (3.0 m·kgf, 22 ft·lbf)
***2nd: 18 Nm (1.8 m·kgf, 13 ft·lbf)**
3rd: +60°

* Following the tightening order, loosen the bolt one by one and then retighten it to the specific torque.

TIP

Tighten the bolts in the tightening sequence cast on the crankcase.

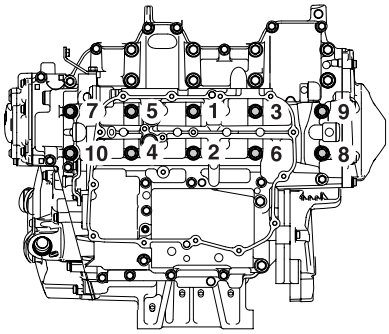

8. Tighten:
   - Crankcase bolts “11”–“40”

Crankcase bolts “11”–“20”
24 Nm (2.4 m·kgf, 17 ft·lbf)
Crankcase bolts “21”–“40”
10 Nm (1.0 m·kgf, 7.2 ft·lbf)

TIP

Tighten the bolts in the tightening sequence cast on the crankcase.

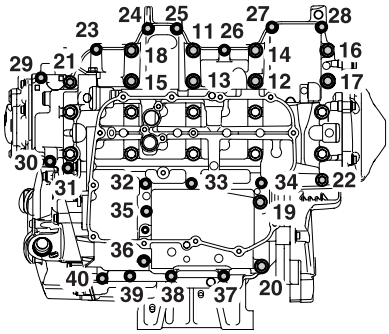

EAS14B1024

CONNECTING RODS AND PISTONS

Removing the connecting rods and pistons

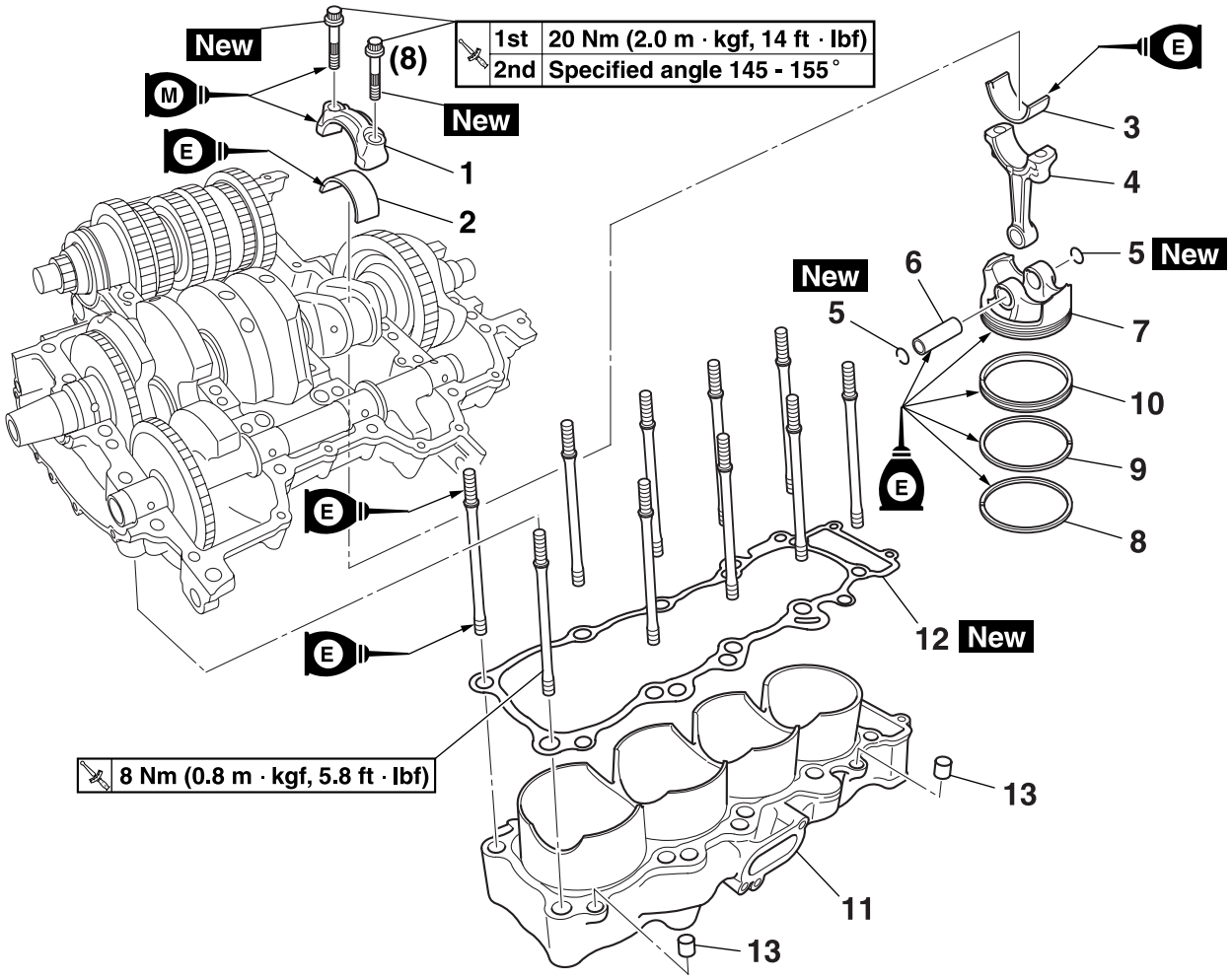

Order	Job/Parts to remove	Q'ty	Remarks
	Lower crankcase		Refer to "CRANKCASE" on page 5-71.
1	Connecting rod cap	4	
2	Big end lower bearing	4	
3	Big end upper bearing	4	
4	Connecting rod	4	
5	Piston pin clip	8	
6	Piston pin	4	
7	Piston	4	
8	Top ring	4	
9	2nd ring	4	
10	Oil ring	4	
11	Cylinder	1	
12	Cylinder gasket	1	
13	Dowel pin	2	
			For installation, reverse the removal procedure.

EAS26030
REMOVING THE CONNECTING RODS AND PISTONS

The following procedure applies to all of the connecting rods and pistons.

1. Remove:
   - Connecting rod cap “1”
   - Connecting rod
   - Big end bearings

TIP
- Identify the position of each big end bearing so that it can be reinstalled in its original place.
- After removing the connecting rods and connecting rod caps, care should be taken not to damage the mating surfaces of the connecting rods and connecting rod caps.

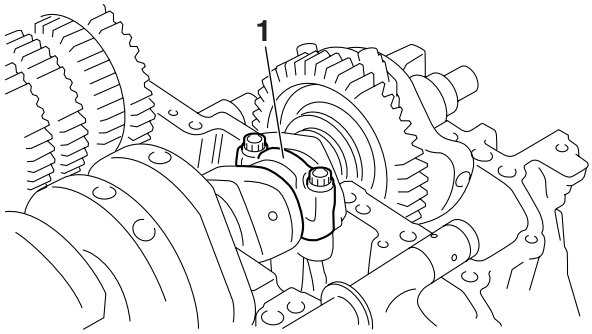

2. Remove:
   - Piston pin clips “1”
   - Piston pin “2”
   - Piston “3”

ECA13810
NOTICE
Do not use a hammer to drive the piston pin out.

TIP
- For reference during installation, put identification marks on the piston crown.
- Before removing the piston pin, deburr the piston pin clip groove and the piston pin bore area. If both areas are debarred and the piston pin is still difficult to remove, remove it with the piston pin puller set “4”.

Piston pin puller set
90890-01304
Piston pin puller
YU-01304

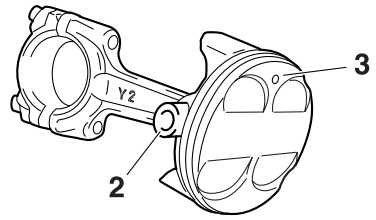

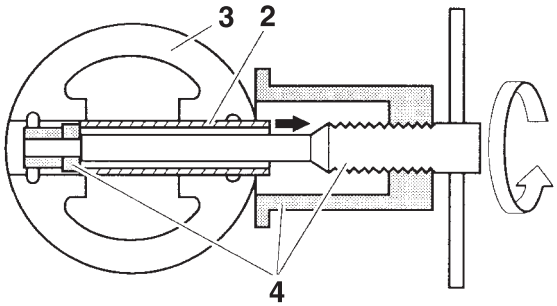

3. Remove:
   - Top ring
   - 2nd ring
   - Oil ring

TIP
When removing a piston ring, open the end gap with your fingers and lift the other side of the ring over the piston crown.

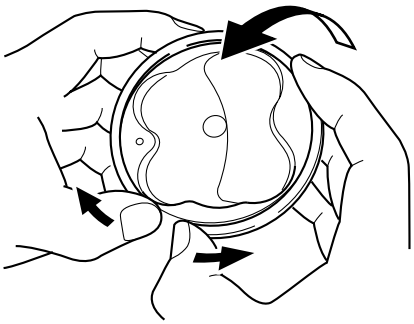

4. Remove:
   - Cylinder
   - Cylinder gasket
   - Cylinder stud bolts

EAS24390
CHECKING THE CYLINDER AND PISTON

1. Check:
   - Piston wall
   - Cylinder wall
     Vertical scratches → Replace the cylinder, and replace the piston and piston rings as a set.

2. Measure:
   - Piston-to-cylinder clearance

▼▼▼▼▼▼▼▼▼▼▼▼▼▼▼▼▼▼▼▼▼▼▼▼▼▼▼▼▼▼▼▼▼▼

a. Measure cylinder bore “C” with the cylinder bore gauge.

TIP

Measure cylinder bore “C” by taking side-to-side and front-to-back measurements of the cylinder. Then, find the average of the measurements.

Bore
78.000–78.010 mm (3.0709–3.0713 in)
Taper limit
0.050 mm (0.0020 in)
Out of round limit
0.050 mm (0.0020 in)

Bore = maximum of D_1–D_2
Taper limit = maximum of D_1 or D_2 - maximum of D_5 or D_6
Out of round limit = maximum of D_1, D_3 or D_5 - minimum of D_2, D_4 or D_6

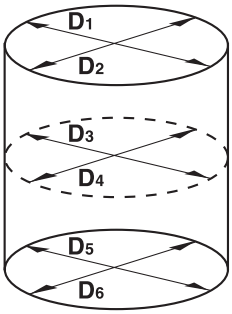

b. If out of specification, replace the cylinder, and replace the piston and piston rings as a set.
c. Measure piston skirt diameter “P” with the micrometer.

Piston diameter
77.975–77.990 mm (3.0699–3.0705 in)

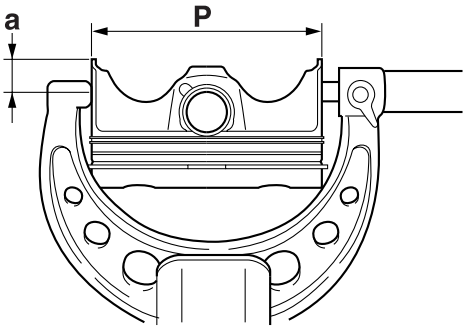

a. 12 mm (0.47 in) from the bottom edge of the piston

d. If out of specification, replace the piston and piston rings as a set.
e. Calculate the piston-to-cylinder clearance with the following formula.

Piston-to-cylinder clearance = Cylinder bore “C” - Piston skirt diameter “P”

Piston-to-cylinder clearance
0.010–0.035 mm (0.0004–0.0014 in)
Limit
0.150 mm (0.0059 in)

f. If out of specification, replace the cylinder, and replace the piston and piston rings as a set.

▲▲▲▲▲▲▲▲▲▲▲▲▲▲▲▲▲▲▲▲▲▲▲▲▲▲▲▲▲▲▲▲▲▲

EAS24430

CHECKING THE PISTON RINGS

1. Measure:
   - Piston ring side clearance
     Out of specification → Replace the piston and piston rings as a set.

TIP

Before measuring the piston ring side clearance, eliminate any carbon deposits from the piston ring grooves and piston rings.

Piston ring side clearance
Top ring
0.030–0.065 mm (0.0012–0.0026 in)
Limit
0.115 mm (0.0045 in)
2nd ring
0.020–0.055 mm (0.0008–0.0022 in)
Limit
0.115 mm (0.0045 in)

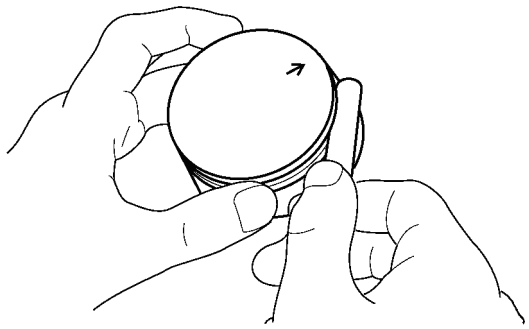

2. Install:
   - Piston ring
     (into the cylinder)

TIP
Level the piston ring into the cylinder with the piston crown.

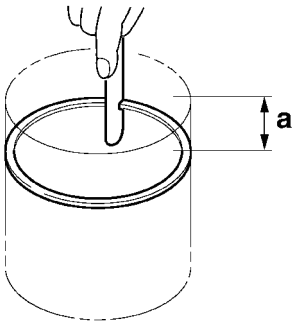

a. 10 mm (0.4 in)

3. Measure:
   - Piston ring end gap
     Out of specification → Replace the piston ring.

TIP
The oil ring expander spacer's end gap cannot be measured. If the oil ring rail's gap is excessive, replace all three piston rings.

Piston ring end gap
Top ring
0.15–0.25 mm (0.0059–0.0098 in)
Limit
0.50 mm (0.0197 in)
2nd ring
0.30–0.45 mm (0.0118–0.0177 in)
Limit
0.80 mm (0.0315 in)
Oil ring
0.10–0.40 mm (0.0039–0.0157 in)

EAS24440
CHECKING THE PISTON PIN

1. Check:
   - Piston pin
     Blue discoloration/grooves → Replace the piston pin and then check the lubrication system.
2. Measure:
   - Piston pin outside diameter "a"
     Out of specification → Replace the piston pin.

Piston pin outside diameter
16.991–17.000 mm (0.6689–0.6693 in)
Limit
16.971 mm (0.6682 in)

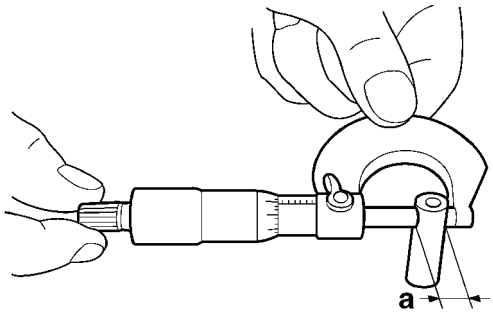

3. Measure:
   - Piston pin bore inside diameter "b"
     Out of specification → Replace the piston.

Piston pin bore inside diameter
17.002–17.013 mm (0.6694–0.6698 in)
Limit
17.043 mm (0.6710 in)

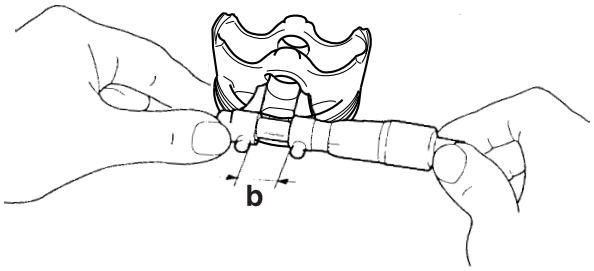

4. Calculate:
   - Piston-pin-to-piston-pin-bore clearance
     Out of specification → Replace the piston pin and piston as a set.

Piston-pin-to-piston-pin-bore clearance = Piston pin bore inside diameter “b” - Piston pin outside diameter “a”

Piston-pin-to-piston-pin-bore clearance
0.002–0.022 mm (0.0001–0.0009 in)
Limit
0.072 mm (0.0028 in)

EAS14B1023
CHECKING THE CONNECTING RODS

1. Measure:
   - Crankshaft-pin-to-big-end-bearing clearance
     Out of specification → Replace the big end bearings.

Crankshaft-pin-to-big-end-bearing clearance
0.034–0.058 mm (0.0013–0.0023 in)
Limit
0.09 mm (0.0035 in)

▼▼▼▼▼▼▼▼▼▼▼▼▼▼▼▼▼▼▼▼▼▼▼▼▼▼▼▼▼▼▼▼▼▼

The following procedure applies to all of the connecting rods.

ECA13930
NOTICE

Do not interchange the big end bearings and connecting rods. To obtain the correct crankshaft-pin-to-big-end-bearing clearance and prevent engine damage, the big end bearings must be installed in their original positions.

a. Clean the big end bearings, crankshaft pins, and the inside of the connecting rods halves.
b. Install the big end upper bearing into the connecting rod and the big end lower bearing into the connecting rod cap.

TIP
Align the projections “a” on the big end bearings with the notches “b” in the connecting rod and connecting rod cap.

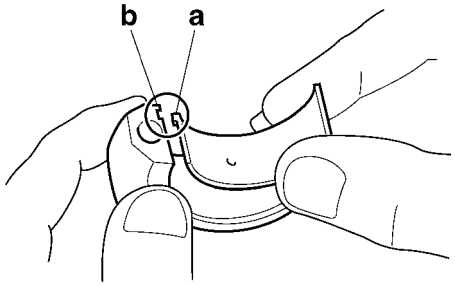

c. Put a piece of Plastigauge® “1” on the crankshaft pin.

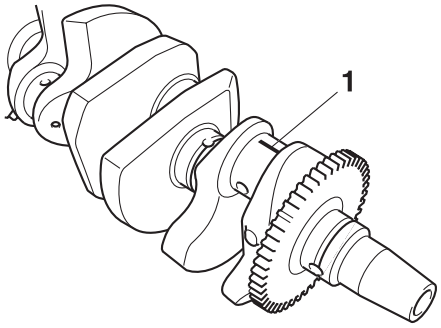

d. Assemble the connecting rod halves.

TIP
- Do not move the connecting rod or crankshaft until the clearance measurement has been completed.
- Lubricate the bolt threads with molybdenum disulfide oil.
- Make sure that the “Y” mark “c” on the connecting rod faces towards the left side of the crankshaft.
- Make sure that the characters “d” on both the connecting rod and connecting rod cap are aligned.

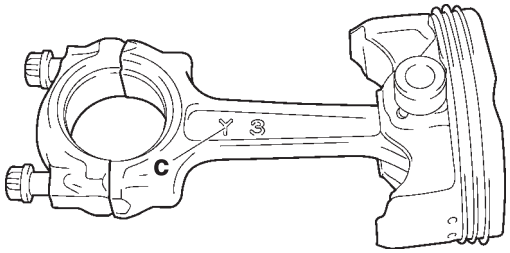

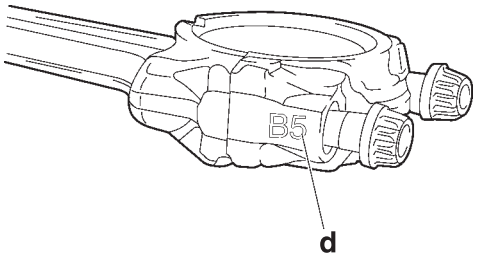

e. Tighten the connecting rod bolts.
   Refer to “INSTALLING THE CONNECTING ROD AND PISTON” on page 5-80.
f. Remove the connecting rod and big end bearings.
g. Measure the compressed Plastigauge® width on the crankshaft pin.
   If the crankshaft-pin-to-big-end-bearing clearance is out of specification, select replacement big end bearings.

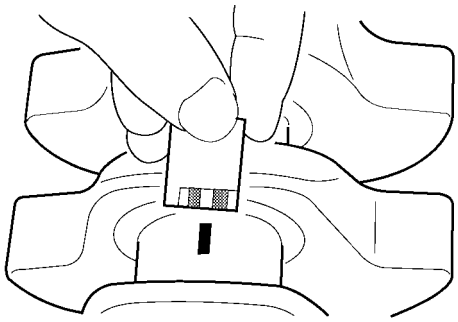

▲▲▲▲▲▲▲▲▲▲▲▲▲▲▲▲▲▲▲▲▲▲▲▲▲▲▲▲▲▲▲▲

2. Select:
   - Big end bearings (P1–P4)

TIP

- The numbers “A” stamped into the crankshaft web and the numbers “1” on the connecting rods are used to determine the replacement big end bearings sizes.
- “P1”–“P4” refer to the bearings shown in the crankshaft illustration.

For example, if the connecting rod “P_1” and the crankshaft web “P_1” numbers are “5” and “2” respectively, then the bearing size for “P_1” is:

“P_1” (connecting rod) - “P_1” (crankshaft) = 5 - 2 = 3 (brown)

Bearing color code
1.Blue 2.Black 3.Brown 4.Green

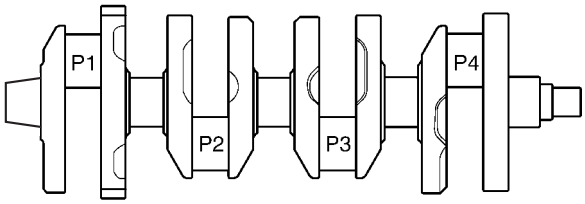

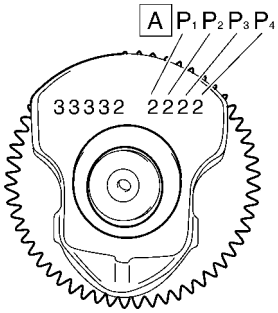

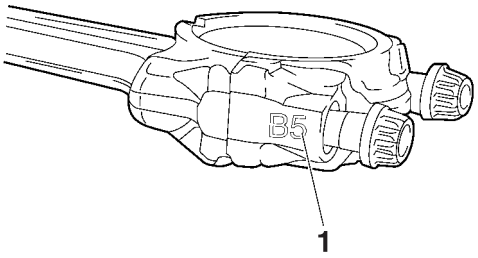

EAS26190

INSTALLING THE CONNECTING ROD AND PISTON

The following procedure applies to all of the connecting rods and pistons.

1. Install:
   - Oil ring expander “1”
   - Lower oil ring rail “2”
   - Upper oil ring rail “3”
   - 2nd ring “4”
   - Top ring “5”
     (into the piston)

TIP

Be sure to install the piston rings so that the manufacturer's marks or numbers "a" face up.

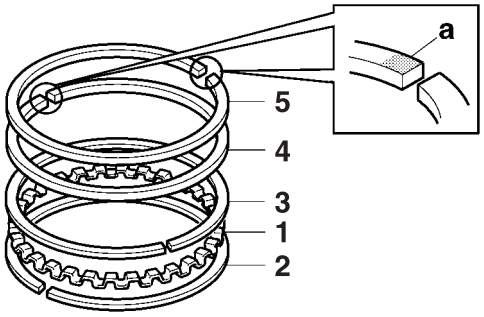

2. Install:
   - Piston "1"
     (onto the respective connecting rod "2")
   - Piston pin "3"
   - Piston pin clip "4" New

TIP

- Apply engine oil onto the piston pin.
- Make sure that the "Y" mark "a" on the connecting rod faces left when the punch mark "b" on the piston is pointing up as shown.
- Install the piston pin clips, so that the clip ends are 3 mm (0.12 in) "c" or more from the cutout in the piston.
- Reinstall each piston into its original cylinder (numbering order starting from the left: #1 to #4).

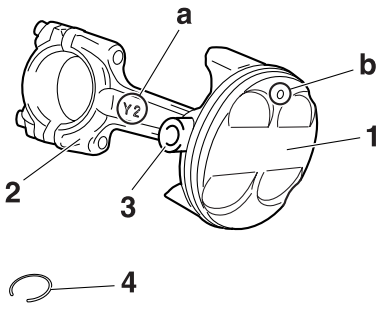

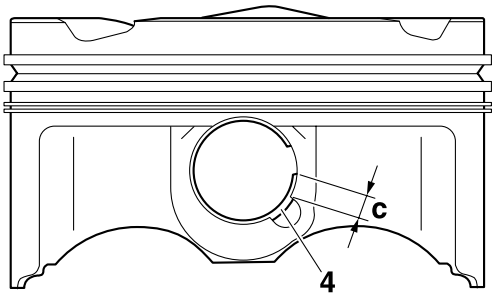

3. Lubricate:
   - Piston
   - Piston rings
   - Cylinder
     (with the recommended lubricant)

	Recommended lubricant **Engine oil**

4. Offset:
   - Piston ring end gaps

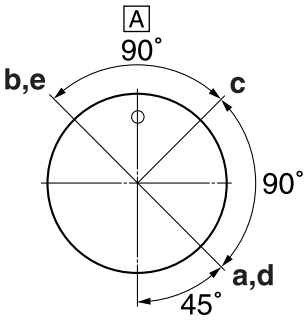

a. Top ring
b. 2nd ring
c. Upper oil ring rail
d. Oil ring expander
e. Lower oil ring rail

A. Exhaust side

5. Lubricate:
   - Crankshaft pins
   - Big end bearings
   - Connecting rod big end inner surface
     (with the recommended lubricant)

	Recommended lubricant **Engine oil**

6. Check:
   - Cylinder stud bolts

	Cylinder stud bolt **8 Nm (0.8 m·kgf, 5.8 ft·lbf)**

7. Install:
   - Piston assemblies "1"
     (into the cylinder "2")

	Piston installing tool **90890-04161** **YM-04161**

ECA14B1040

NOTICE

If the projection "a" of the piston installing tool damages, you cannot use it. Please handle with care.

TIP

Fit the projection "a" of the piston installing tool "3" and blunt-edged part "b" of the cylinder, fix the position of the piston installing tool, and then push the piston down to the cylinder.

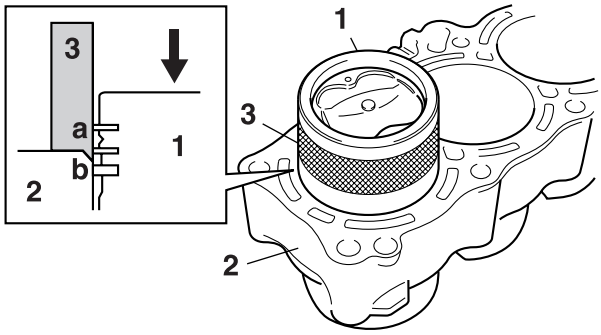

8. Install:
   - Big end bearings
     (onto the connecting rods and connecting rod caps)
   - Cylinder gasket New
   - Dowel pin
   - Cylinder assembly
   - Connecting rod caps
   - Connecting rod bolts New

TIP

- Align the projections "a" on the big end bearings with the notches "b" in the connecting rods and connecting rod caps.
- Be sure to reinstall each big end bearing in its original place.
- Make sure the "Y" marks "c" on the connecting rods face towards the left side of the crankshaft.
- Make sure the characters "d" on both the connecting rod and connecting rod cap are aligned.
- Apply Molybdenum disulfide oil to the bearing surface of the connecting rod bolt and connecting rod cap.

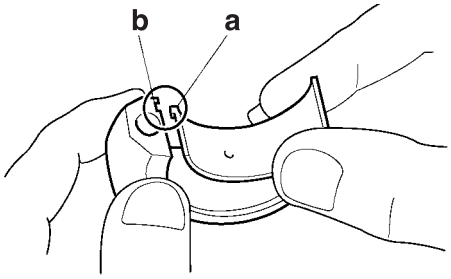

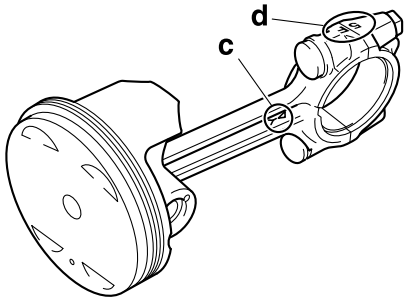

9. Tighten:
   - Connecting rod bolts "1"

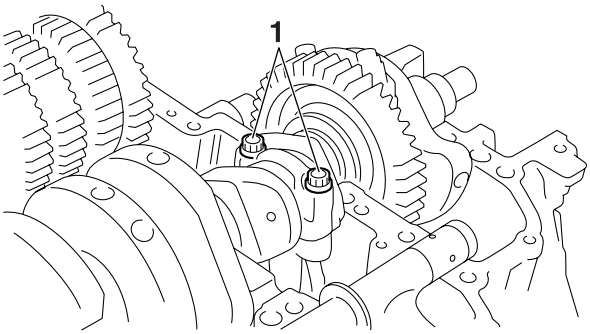

▼▼▼▼▼▼▼▼▼▼▼▼▼▼▼▼▼▼▼▼▼▼▼▼▼▼▼▼▼▼▼▼▼▼

EWA14B1015

WARNING

Replace the connecting rod bolts with new ones.

TIP

Tighten the connecting rod nuts using the following procedure.

a. Tighten the connecting rod bolts with a torque wrench.

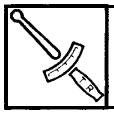	**Connecting rod bolt (1st)** **20 Nm (2.0 m·kgf, 14 ft·lbf)**

b. Put a mark "1" on the corner of the connecting rod bolt "2" and the connecting rod cap "3".

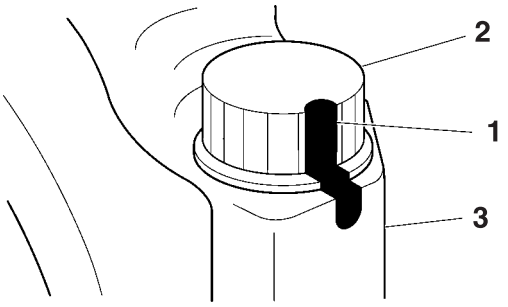

c. Tighten the connecting rod bolts further to reach the specified angle 145°–155°.

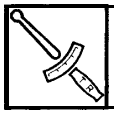	**Connecting rod bolt (final)** **Specified angle 145°–155°**

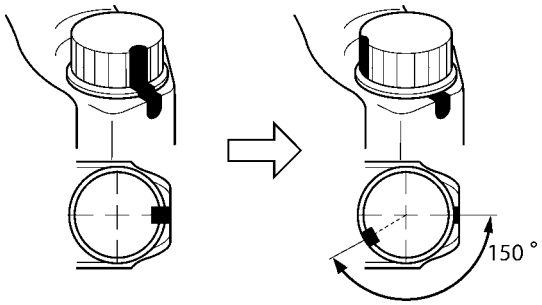

EWA13400

WARNING

If the connecting rod bolt is tightened more than the specified angle, do not loosen the bolt and then retighten it. Instead, replace the connecting rod bolt with a new one and perform the procedure again.

ECA13950

NOTICE

Do not use a torque wrench to tighten the connecting rod bolt to the specified angle.

d. After the installation, check that the section shown “a” is flush with each other by touching the surface.

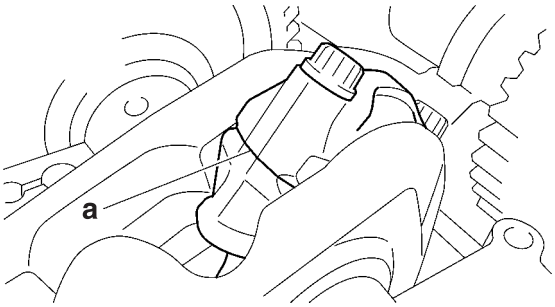

▲▲▲▲▲▲▲▲▲▲▲▲▲▲▲▲▲▲▲▲▲▲▲▲▲▲▲▲▲▲

EAS25960
CRANKSHAFT

Removing the crankshaft

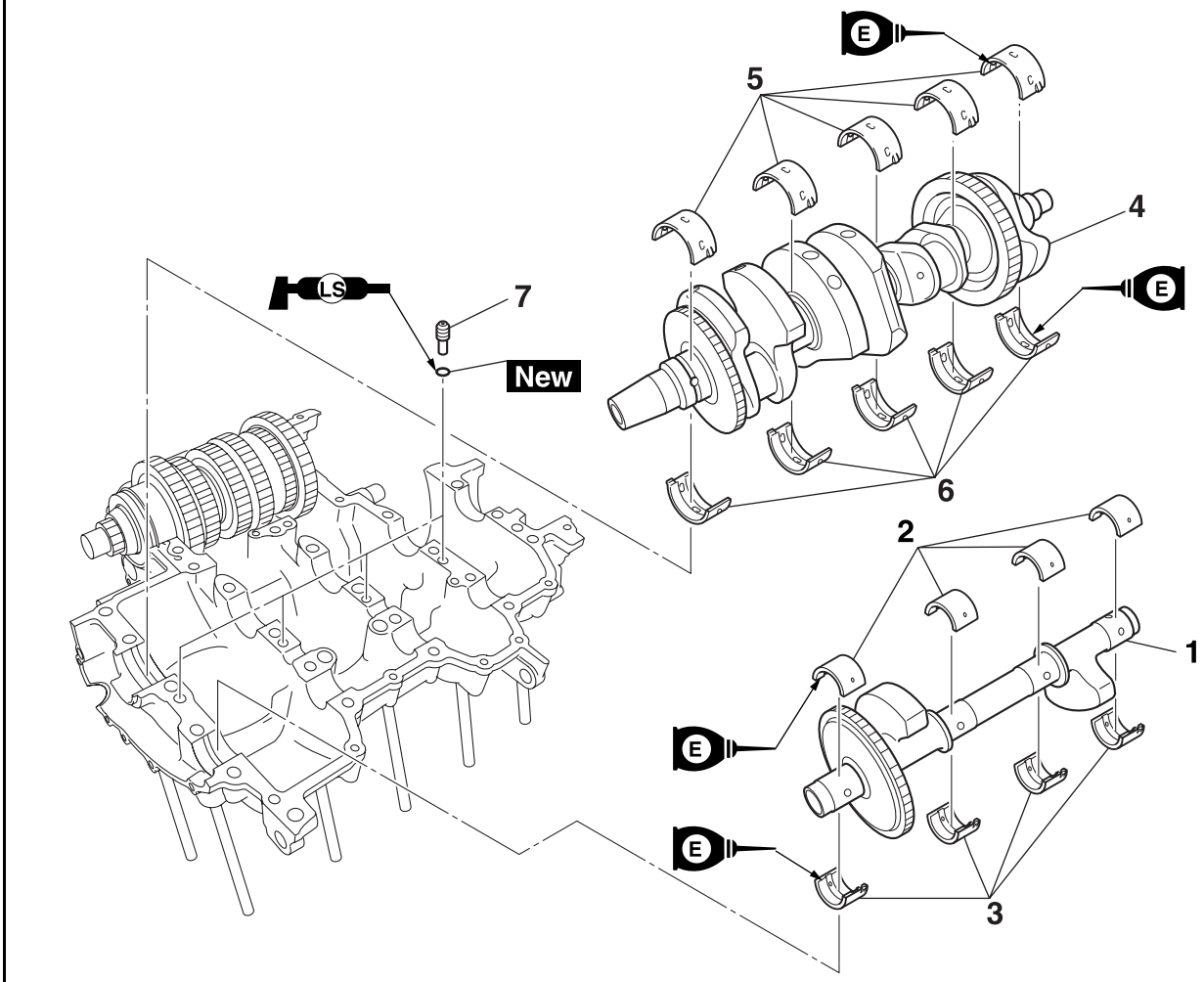

Order	Job/Parts to remove	Q'ty	Remarks
	Lower crankcase		Refer to "CRANKCASE" on page 5-71.
	Connecting rod		Refer to "REMOVING THE CONNECTING RODS AND PISTONS" on page 5-76.
1	Balancer shaft	1	
2	Balancer shaft journal lower bearing	4	
3	Balancer shaft journal upper bearing	4	
4	Crankshaft	1	
5	Crankshaft journal lower bearing	5	
6	Crankshaft journal upper bearing	5	
7	Oil nozzle	4	
			For installation, reverse the removal procedure.

EAS25980
REMOVING THE CRANKSHAFT AND BALANCER SHAFT

1. Remove:
   - Balancer shaft “1”
   - Balancer shaft journal bearings
   - Crankshaft assembly “2”
   - Crankshaft journal bearings

TIP
Identify the position of each balancer shaft journal bearings and crankshaft journal bearings so that it can be reinstalled in its original place.

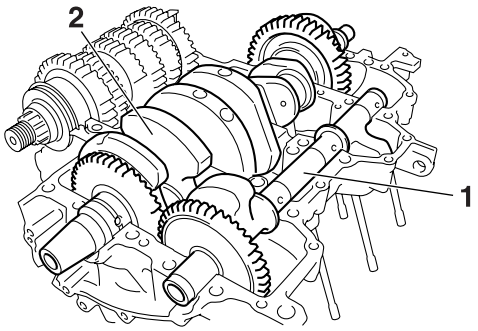

EAS14B1025
CHECKING THE OIL NOZZLES

The following procedure applies to all of the oil nozzles.

1. Check:
   - Oil nozzle “1”
     Damage/wear → Replace the oil nozzle.
   - Oil passage
     Obstruction → Blow out with compressed air.

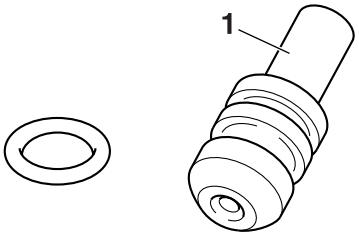

EAS14B1026
CHECKING THE CRANKSHAFT

1. Measure:
   - Crankshaft runout
     Out of specification → Replace the crankshaft.

	Crankshaft runout limit **0.030 mm (0.0012 in)**

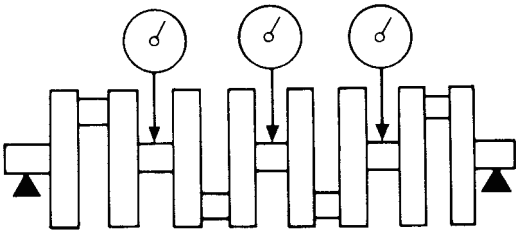

2. Check:
   - Crankshaft journal surfaces
   - Crankshaft pin surfaces
   - Bearing surfaces
     Scratches/wear → Replace the crankshaft.
3. Measure:
   - Crankshaft-journal-to-crankshaft-journal-bearing clearance
     Out of specification → Replace the crankshaft journal bearings.

	Journal oil clearance **0.004–0.039 mm (0.0002–0.0015 in)**

ECA13920
NOTICE

Do not interchange the crankshaft journal bearings. To obtain the correct crankshaft-journal-to-crankshaft-journal-bearing clearance and prevent engine damage, the crankshaft journal bearings must be installed in their original positions.

▼▼▼▼▼▼▼▼▼▼▼▼▼▼▼▼▼▼▼▼▼▼▼▼▼▼▼▼▼▼▼▼▼▼

a. Clean the crankshaft journal bearings, crankshaft journals, and bearing portions of the crankcase.
b. Place the upper crankcase upside down on a bench.
c. Install the crankshaft journal upper bearings “1” and the crankshaft into the upper crankcase.

TIP
Align the projections “a” on the crankshaft journal upper bearings with the notches “b” in the upper crankcase.

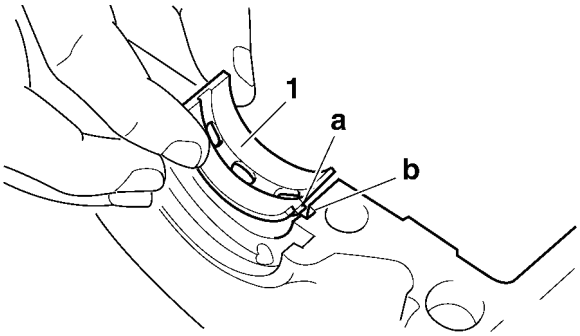

d. Put a piece of Plastigauge® “1” on each crankshaft journal.

TIP

Do not put the Plastigauge® over the oil hole in the crankshaft journal.

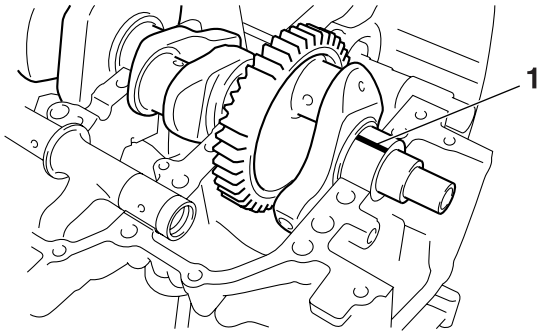

e. Install the crankshaft journal lower bearings “1” into the lower crankcase and assemble the crankcase halves.

TIP

- Align the projections “a” of the crankshaft journal lower bearings with the notches “b” in the lower crankcase.
- Do not move the crankshaft until the clearance measurement has been completed.

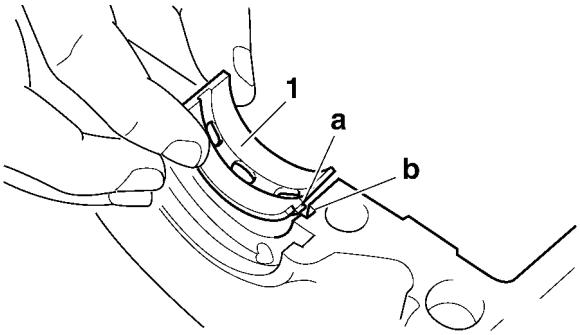

f. Tighten the bolts to specification in the tightening sequence cast on the crankcase. Refer to “CRANKCASE” on page 5-71.

g. Remove the lower crankcase and the crankshaft journal lower bearings.

h. Measure the compressed Plastigauge® width “a” on each crankshaft journal.
If the crankshaft-journal-to-crankshaft-journal-bearing clearance is out of specification, select replacement crankshaft journal bearings.

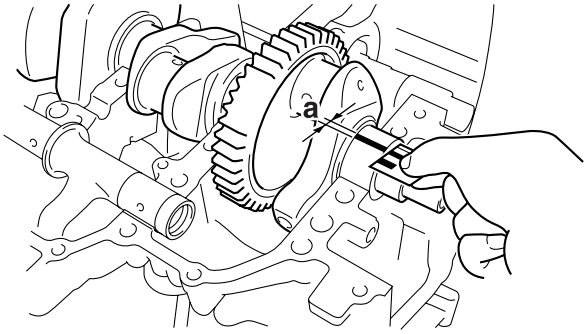

▲▲▲▲▲▲▲▲▲▲▲▲▲▲▲▲▲▲▲▲▲▲▲▲▲▲▲▲▲▲

4. Select:
   - Crankshaft journal bearings (J_1–J_5)

TIP

- The numbers “A” stamped into the crankshaft web and the numbers “B” stamped into the lower crankcase are used to determine the replacement crankshaft journal bearing sizes.
- J_1–J_5 refer to the bearings shown in the crankshaft illustration.
- If J_1–J_5 are the same, use the same size for all of the bearings.

For example, if the crankcase J_1 and crankshaft web J_1 numbers are 5 and 2 respectively, then the bearing size for J_1 is:

J_1 (crankcase) - J_1 (crankshaft web) = 5 - 2 = 3 (brown)

Bearing color code
1.Blue 2.Black 3.Brown
4.Green 5.Yellow

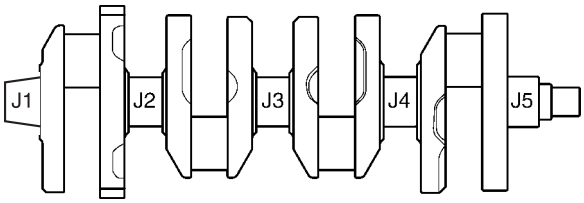

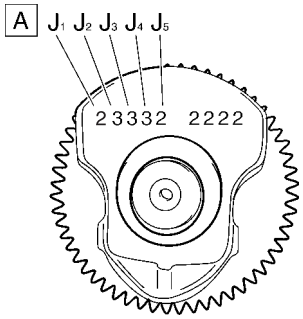

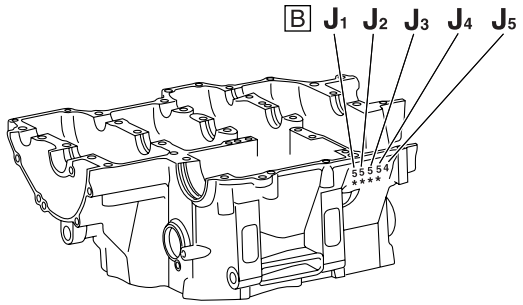

EAS14B1027

CHECKING THE BALANCER SHAFT

1. Measure:
   - Balancer shaft runout
     Out of specification → Replace the balancer shaft.

	Balancer shaft runout limit 0.030 mm (0.0012 in)

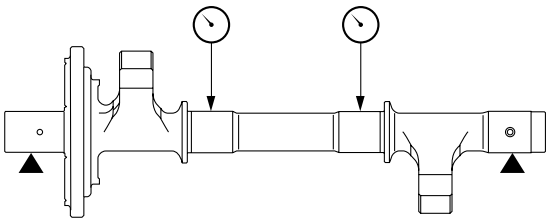

2. Check:
   - Balancer shaft journal surfaces
   - Bearing surfaces
     Scratches/wear → Replace the balancer shaft.
3. Measure:
   - Balancer shaft-journal-to-balancer shaft-journal-bearing clearance
     Out of specification → Replace the balancer shaft journal bearings.

	Journal oil clearance 0.012–0.043 mm (0.0005–0.0017 in)

ECA14B1020

NOTICE

Do not interchange the balancer shaft journal bearings. To obtain the correct balancer shaft-journal-to-balancer shaft-journal-bearing clearance and prevent engine damage, the balancer shaft journal bearings must be installed in their original positions.

▼▼▼▼▼▼▼▼▼▼▼▼▼▼▼▼▼▼▼▼▼▼▼▼▼▼▼▼▼▼▼▼▼▼

a. Clean the balancer shaft journal bearings, balancer shaft journals, and bearing portions of the crankcase.
b. Place the upper crankcase upside down on a bench.
c. Install the balancer shaft journal upper bearings “1” and the balancer shaft into the upper crankcase.

TIP

Align the projections “a” on the balancer shaft journal upper bearings with the notches “b” in the upper crankcase.

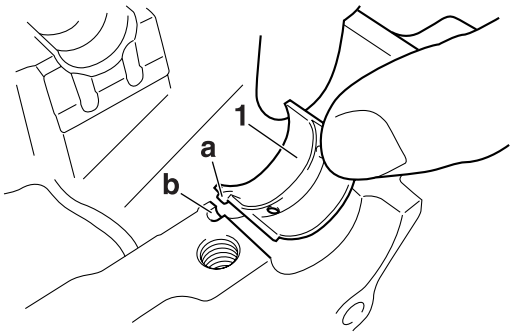

d. Put a piece of Plastigauge® “1” on each balancer shaft journal.

TIP

Do not put the Plastigauge® over the oil hole in the balancer shaft journal.

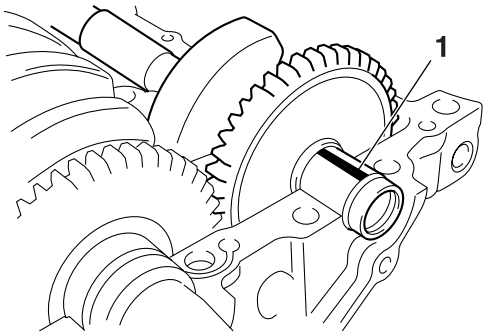

e. Install the balancer shaft journal lower bearings “1” into the lower crankcase and assemble the crankcase halves.

TIP

- Align the projections “a” of the balancer shaft journal lower bearings with the notches “b” in the lower crankcase.
- Do not move the balancer shaft until the clearance measurement has been completed.

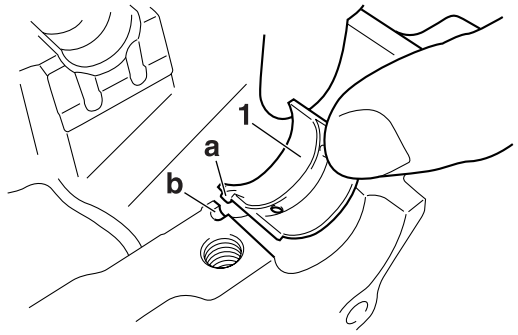

f. Tighten the bolts to specification in the tightening sequence cast on the crankcase. Refer to “CRANKCASE” on page 5-71.
g. Remove the lower crankcase and the balancer shaft journal lower bearings.
h. Measure the compressed Plastigauge® width “a” on each balancer shaft journal. If the balancer shaft-journal-to-balancer shaft-journal-bearing clearance is out of specification, select replacement balancer shaft journal bearings.

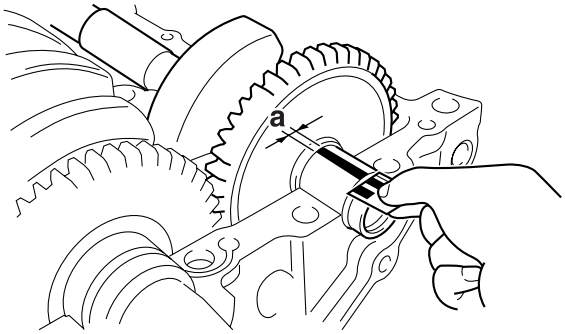

▲▲▲▲▲▲▲▲▲▲▲▲▲▲▲▲▲▲▲▲▲▲▲▲▲▲▲▲▲▲

4. Select:
   - Balancer shaft journal bearings (J_1–J_4)

TIP

- The numbers “A” stamped into the balancer shaft web and the numbers “B” stamped into the lower crankcase are used to determine the replacement balancer shaft journal bearing sizes.
- J_1–J_4 refer to the bearings shown in the balancer shaft illustration.
- If J_1–J_4 are the same, use the same size for all of the bearings.

For example, if the crankcase J_1 and balancer shaft web J_1 numbers are 6 and 2 respectively, then the bearing size for J_1 is:

J_1 (crankcase) - J_1 (balancer shaft web) - 1 = 6 - 2 - 1 = 3 (brown)

Bearing color code

0.White	**1.Blue**	**2.Black**
3.Brown	**4.Green**	**5.Yellow**
6.Pink		

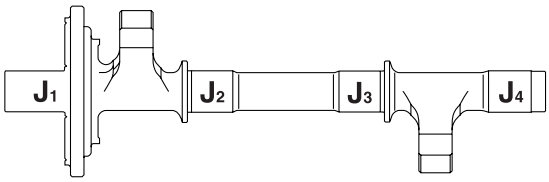

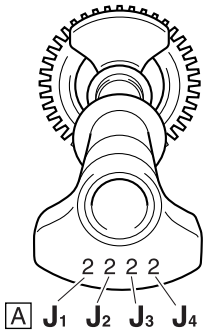

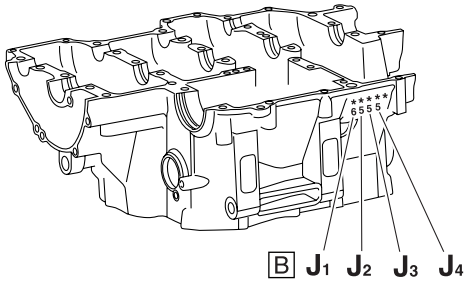

EAS26200

INSTALLING THE CRANKSHAFT

1. Install:
   - Crankshaft journal upper bearings (into the upper crankcase)
   - Crankshaft journal lower bearings (into the lower crankcase)
   - Crankshaft

TIP
- Align the projections “a” on the crankshaft journal bearings “1” with the notches “b” in the crankcases.
- Be sure to install each crankshaft journal bearing in its original place.

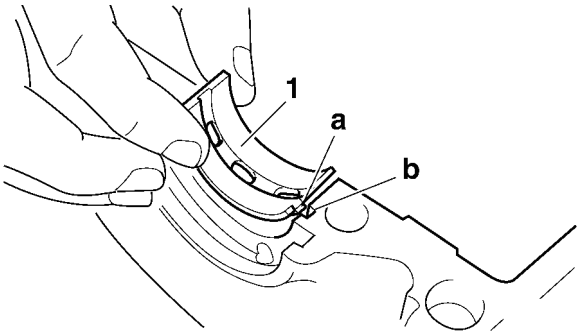

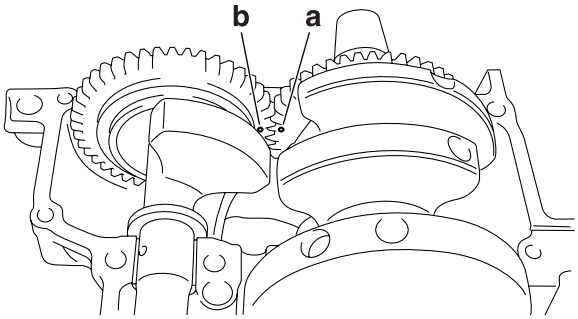

EAS14B1028
INSTALLING THE BALANCER ASSEMBLY

1. Install:
   - Balancer journal upper bearings (into the upper crankcase)
   - Balancer journal lower bearings (into the lower crankcase)

TIP
- Align the projections “a” on the balancer journal bearings “1” with the notches “b” in the crankcases.
- Be sure to install each balancer journal bearing in its original place.

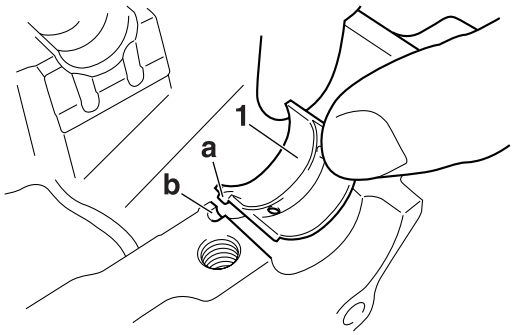

2. Install:
   - Balancer shaft

TIP
Install by aligning the crankshaft match mark “a” and the balancer shaft match mark “b”.

EAS26241
TRANSMISSION

Removing the transmission, shift drum assembly, and shift forks

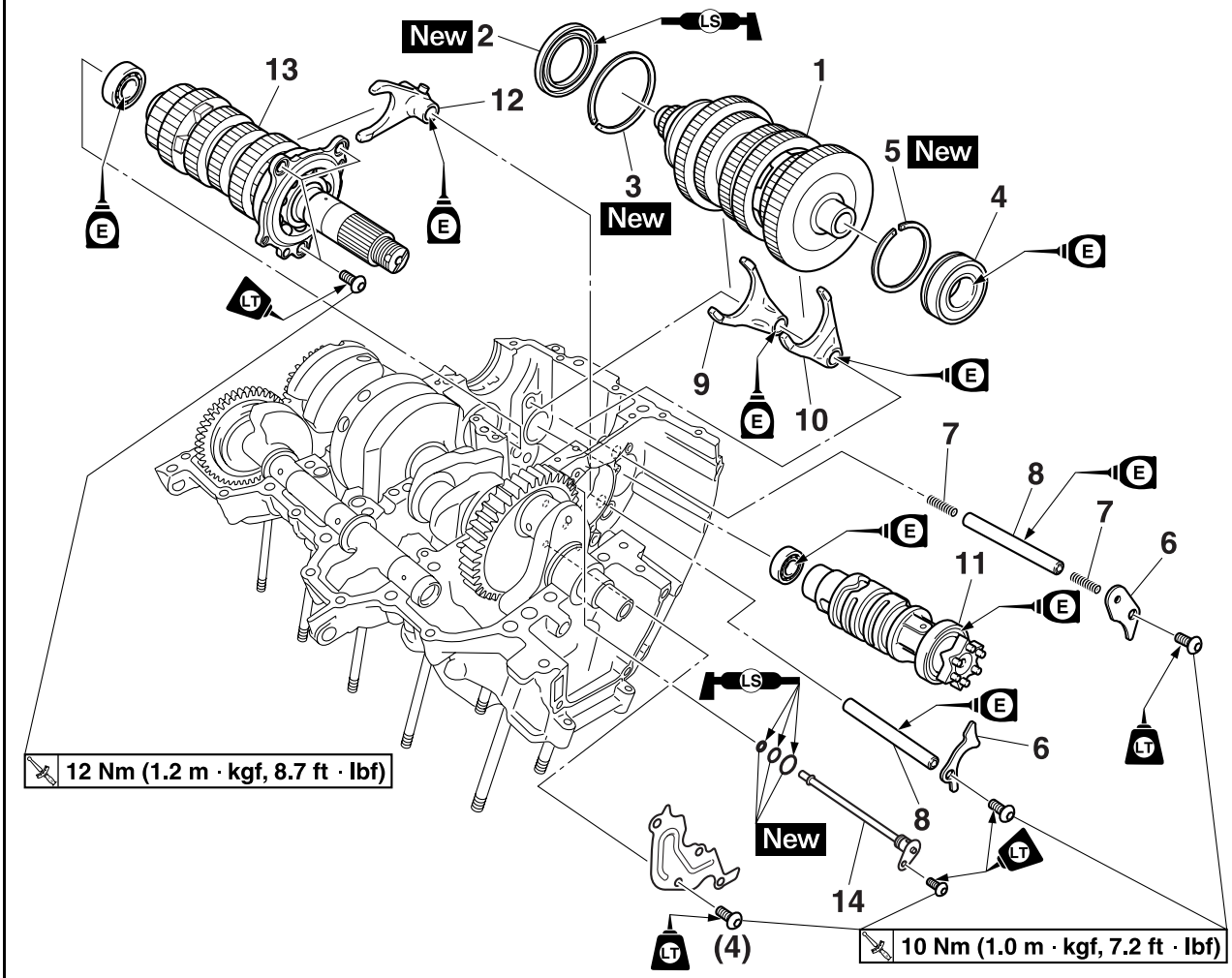

Order	Job/Parts to remove	Q'ty	Remarks
	Lower crankcase		Separate. Refer to "CRANKCASE" on page 5-71.
1	Drive axle assembly	1	
2	Oil seal	1	
3	Circlip	1	
4	Bearing	1	
5	Circlip	1	
6	Shift drum retainer	2	
7	Spring	2	
8	Shift fork guide bar	2	
9	Shift fork-L	1	
10	Shift fork-R	1	
11	Shift drum assembly	1	
12	Shift fork-C	1	
13	Main axle assembly	1	
14	Oil delivery pipe 2	1	

Removing the transmission, shift drum assembly, and shift forks

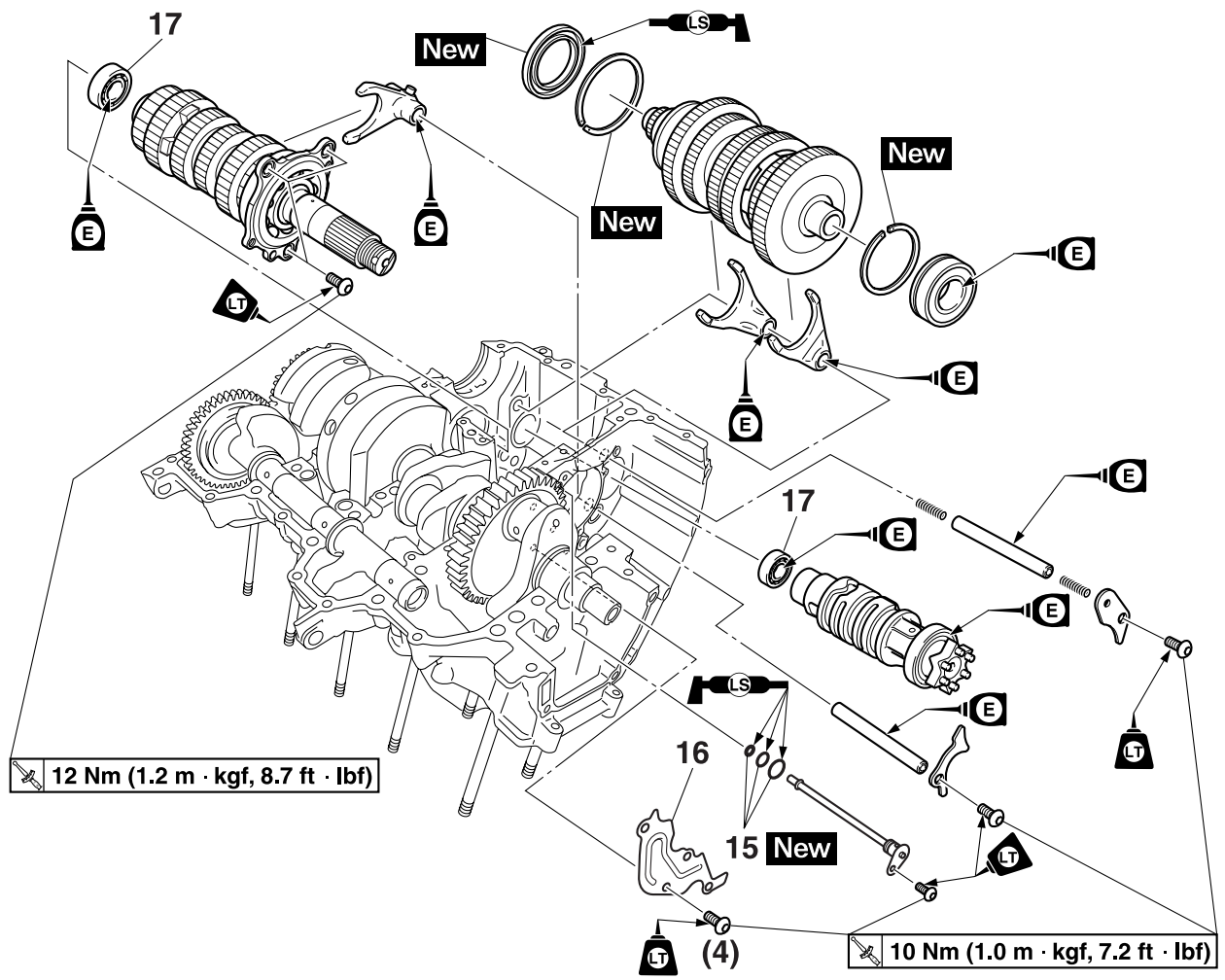

Order	Job/Parts to remove	Q'ty	Remarks
15	O-ring	3	
16	Oil baffle plate	1	
17	Bearing	2	
			For installation, reverse the removal procedure.

Disassembling the main axle assembly

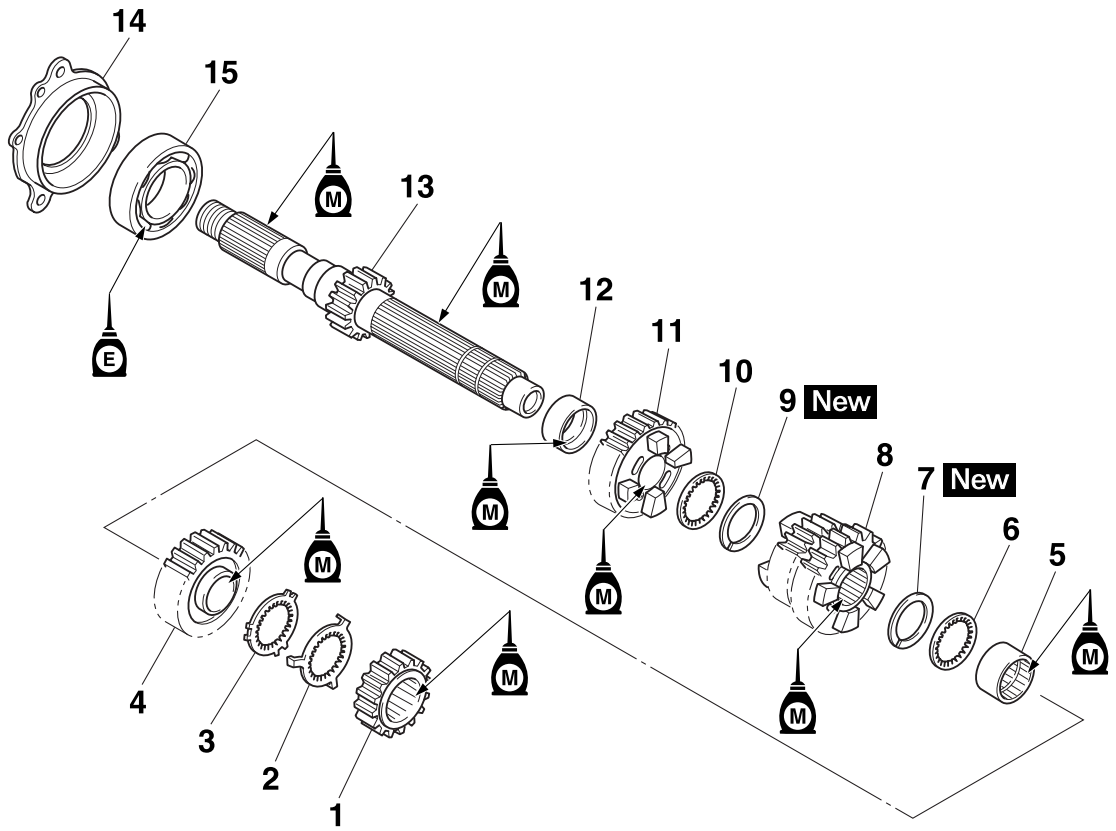

Order	Job/Parts to remove	Q'ty	Remarks
1	2nd pinion gear	1	
2	Toothed lock washer	1	
3	Toothed lock washer retainer	1	
4	6th pinion gear	1	
5	Collar	1	
6	Washer	1	
7	Circlip	1	
8	3rd/4th pinion gear	1	
9	Circlip	1	
10	Washer	1	
11	5th pinion gear	1	
12	Collar	1	
13	Main axle	1	
14	Bearing housing	1	
15	Bearing	1	
			For installation, reverse the removal procedure.

Disassembling the drive axle assembly

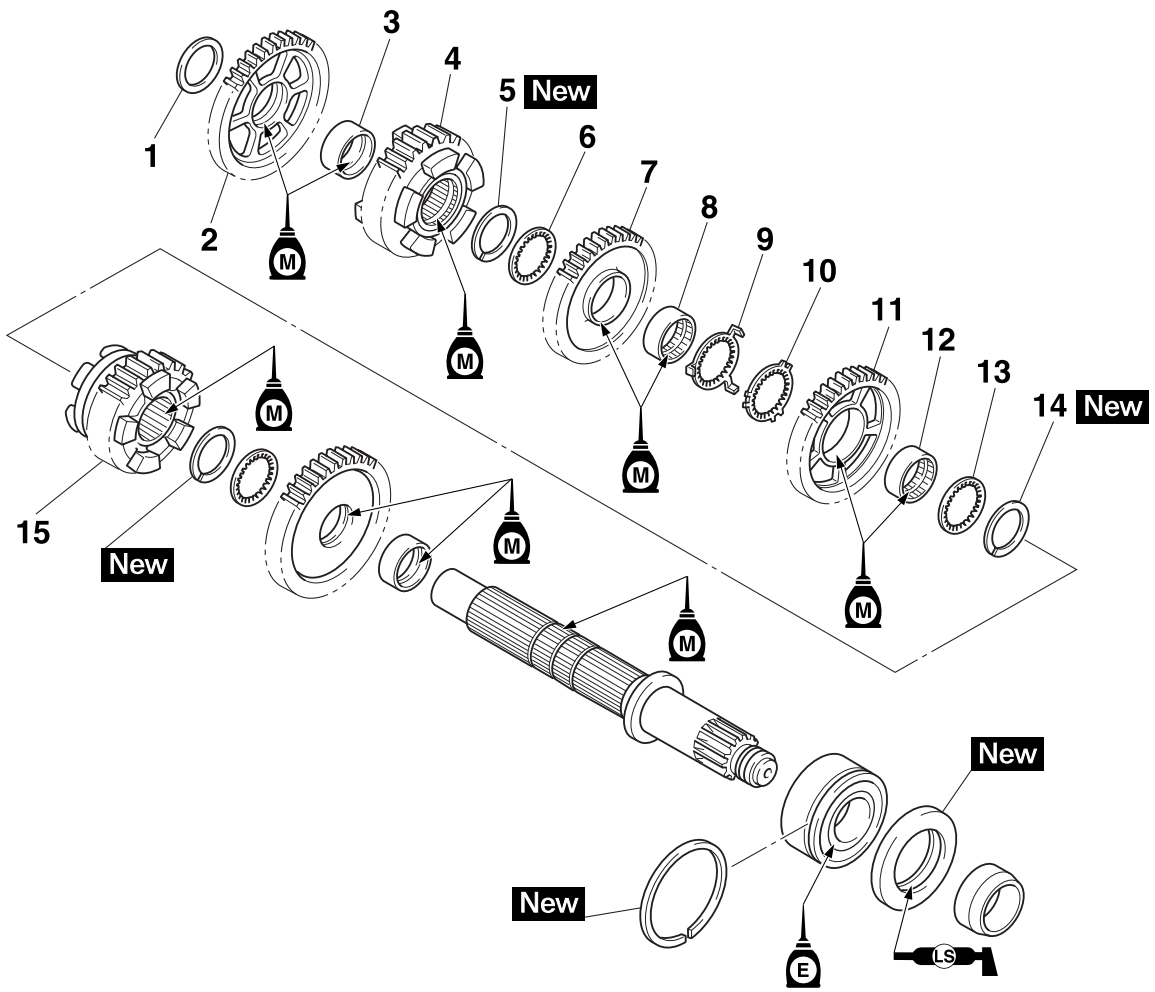

Order	Job/Parts to remove	Q'ty	Remarks
1	Washer	1	
2	1st wheel gear	1	
3	Collar	1	
4	5th wheel gear	1	
5	Circlip	1	
6	Washer	1	
7	3rd wheel gear	1	
8	Collar	1	
9	Toothed lock washer	1	
10	Toothed lock washer retainer	1	
11	4th wheel gear	1	
12	Collar	1	
13	Washer	1	
14	Circlip	1	
15	6th wheel gear	1	

Disassembling the drive axle assembly

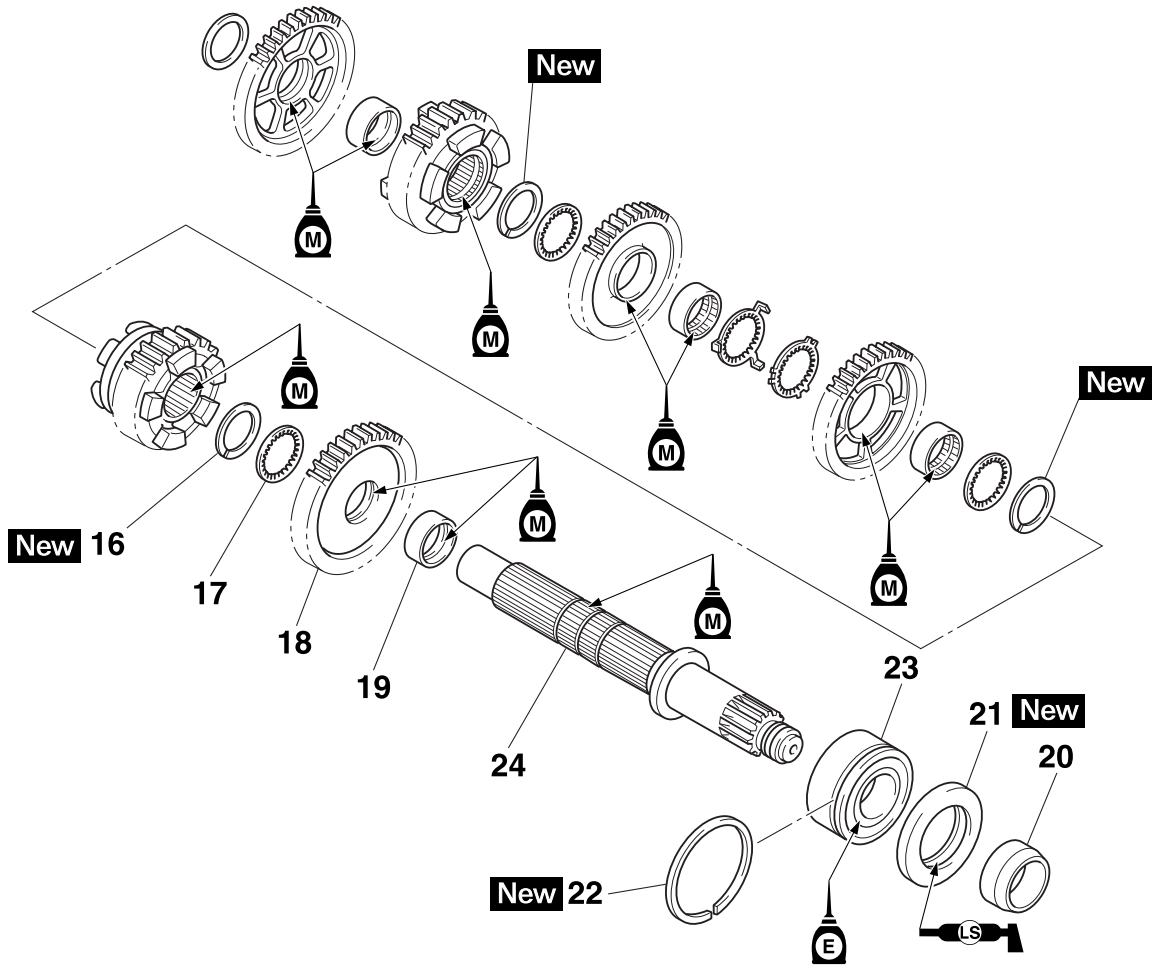

Order	Job/Parts to remove	Q'ty	Remarks
16	Circlip	1	
17	Washer	1	
18	2nd wheel gear	1	
19	Collar	1	
20	Collar	1	
21	Oil seal	1	
22	Circlip	1	
23	Bearing	1	
24	Drive axle	1	
			For installation, reverse the removal procedure.

EAS26250
REMOVING THE TRANSMISSION

1. Remove:
   - Drive axle assembly “1”
   - Shift drum retainers “2”
   - Shift fork guide bars
   - Shift fork “L” and “R”
   - Shift drum assembly
   - Shift fork “C”

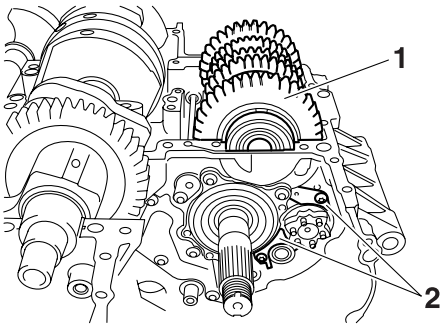

2. Remove:
   - Main axle assembly “1”

▼▼▼▼▼▼▼▼▼▼▼▼▼▼▼▼▼▼▼▼▼▼▼▼▼▼▼▼▼▼▼▼▼▼

a. Insert two bolts “2” of the proper size, as shown in the illustration, into the main axle assembly bearing housing.

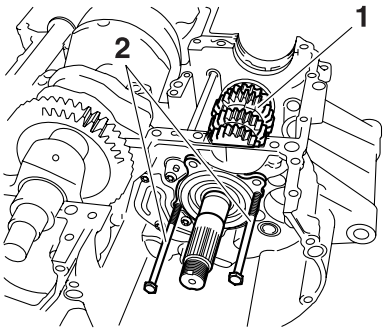

b. Tighten the bolts until they contact the crankcase surface.
c. Continue tightening the bolts until the main axle assembly comes free from the upper crankcase.

▲▲▲▲▲▲▲▲▲▲▲▲▲▲▲▲▲▲▲▲▲▲▲▲▲▲▲▲▲▲▲▲▲▲

3. Remove:
   - Oil delivery pipe 2 “1”
   - Bearings “2”

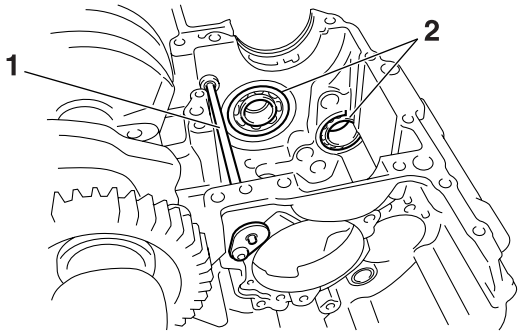

EAS26260
CHECKING THE SHIFT FORKS

The following procedure applies to all of the shift forks.

1. Check:
   - Shift fork cam follower “1”
   - Shift fork pawl “2”
     Bends/damage/scoring/wear → Replace the shift fork.

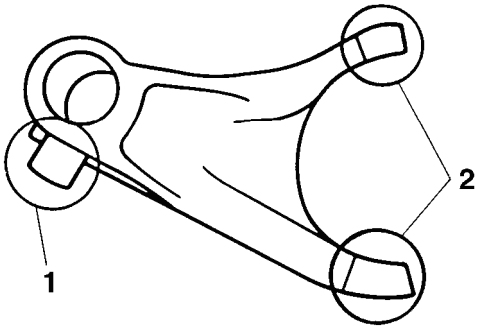

2. Check:
   - Shift fork guide bar
     Roll the shift fork guide bar on a flat surface.
     Bends → Replace.

EWA12840

⚠ WARNING

Do not attempt to straighten a bent shift fork guide bar.

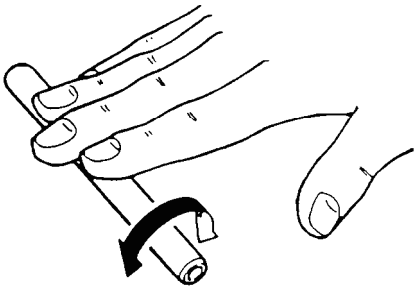

3. Check:
   - Shift fork movement
     (along the shift fork guide bar)
     Rough movement → Replace the shift forks and shift fork guide bar as a set.

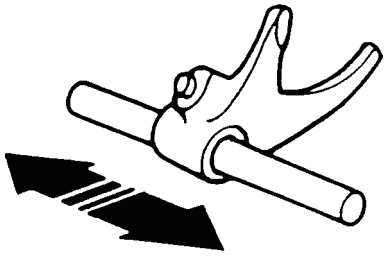

EAS26270
CHECKING THE SHIFT DRUM ASSEMBLY
1. Check:
   - Shift drum groove
     Damage/scratches/wear → Replace the shift drum assembly.
   - Shift drum segment “1”
     Damage/wear → Replace the shift drum assembly.
   - Shift drum bearing “2”
     Damage/pitting → Replace the shift drum assembly.

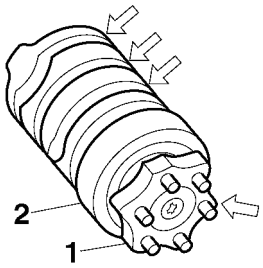

EAS26300
CHECKING THE TRANSMISSION
1. Measure:
   - Main axle runout
     (with a centering device and dial gauge “1”)
     Out of specification → Replace the main axle.

	Main axle runout limit **0.08 mm (0.0032 in)**

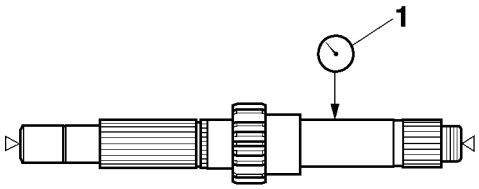

2. Measure:
   - Drive axle runout
     (with a centering device and dial gauge “1”)
     Out of specification → Replace the drive axle.

	Drive axle runout limit **0.08 mm (0.0032 in)**

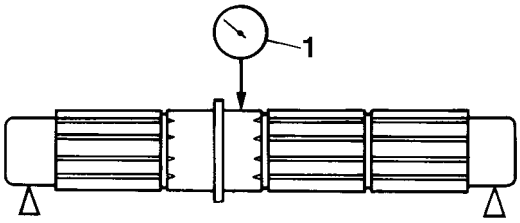

3. Check:
   - Transmission gears
     Blue discoloration/pitting/wear → Replace the defective gear(s).
   - Transmission gear dogs
     Cracks/damage/rounded edges → Replace the defective gear(s).

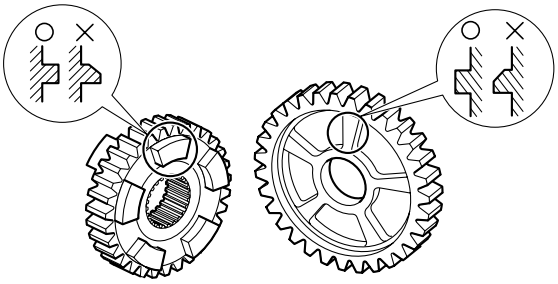

4. Check:
   - Transmission gear engagement
     (each pinion gear to its respective wheel gear)
     Incorrect → Reassemble the transmission axle assemblies.

5. Check:
   - Transmission gear movement
     Rough movement → Replace the defective part(s).
6. Check:
   - Circlips
     Bends/damage/looseness → Replace.

EAS29020
ASSEMBLING THE MAIN AXLE AND DRIVE AXLE

1. Install:
   - Toothed washer “1”
   - Circlip “2” New

TIP
- Be sure the circlip sharp-edged corner “a” is positioned opposite side to the toothed washer and gear.
- Align the opening between the ends “b” of the circlip with a projection “c” of the spline in the axle.

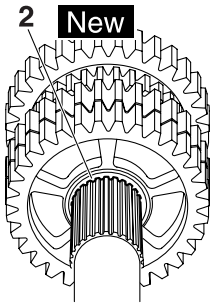

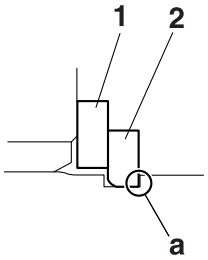

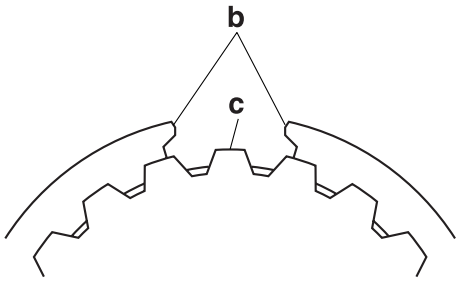

2. Install:
   - Toothed lock washer retainer “1”
   - Toothed lock washer “2”

TIP
- With the toothed lock washer retainer “1” in the groove “a” in the axle, align the projection “c” on the retainer with an axle spline “b”, and then install the toothed lock washer “2”.
- Be sure to align the projection on the toothed lock washer that is between the alignment marks “e” with the alignment mark “d” on the retainer.

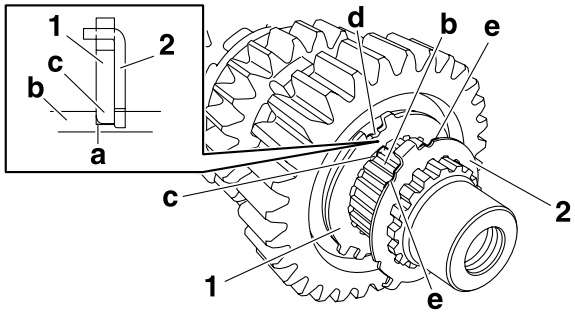

EAS26350
INSTALLING THE TRANSMISSION

1. Install:
   - Bearing “1”
   - Oil delivery pipe 2 “2”
   - O-rings New

Oil delivery pipe 2 bolt
10 Nm (1.0 m·kgf, 7.2 ft·lbf)
LOCTITE®

TIP
Face the seal side of the bearing to the outside and install it close to the right side end of the crankcase.

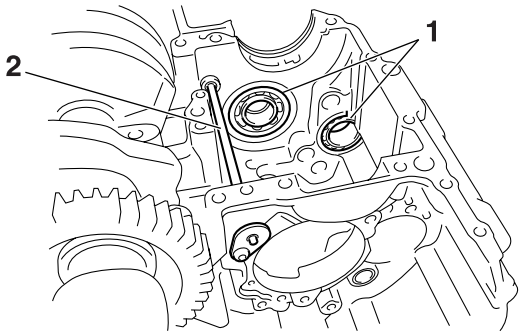

2. Install:
   - Main axle assembly “1”

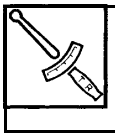

Bearing housing bolt
12 Nm (1.2 m·kgf, 8.7 ft·lbf)
LOCTITE®

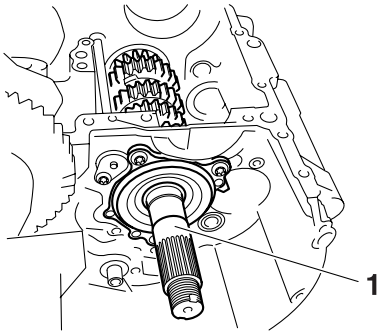

3. Install:
   - Shift fork-C “1”
   - Shift drum assembly “2”
   - Shift fork guide bar “3”

TIP
- The embossed marks on the shift forks should face towards the right side of the engine and be in the following sequence: “R”, “C”, “L”.
- Carefully position the shift forks so that they are installed correctly into the transmission gears.
- Install shift fork-C into the groove “a” in the 3rd and 4th pinion gear on the main axle.

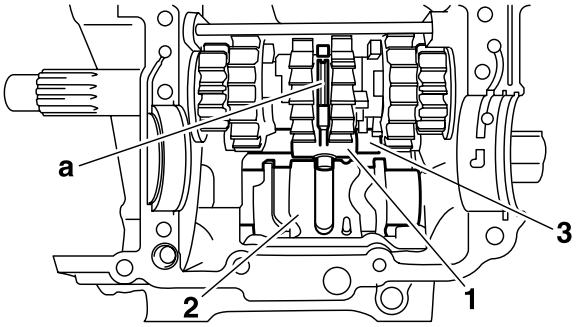

4. Install:
   - Shift fork-R “1”
   - Shift fork-L “2”
   - Shift fork guide bar
   - Springs
   - Shift drum retainers “3”
   - Bearing
   - Oil seal New
   - Circlip “4” New
   - Drive axle assembly “5”

Shift drum retainer bolt
10 Nm (1.0 m·kg, 7.2 ft·lb)
LOCTITE®

TIP
- Install shift fork-R into the groove “a” in the 5th wheel gear and shift fork-L into the groove “b” in the 6th wheel gear on the drive axle.
- Install the shift drum retainer with its “OUT” mark “c” facing outward.
- Make sure that the drive axle bearing circlip “4” is inserted into the grooves “d” in the upper crankcase.

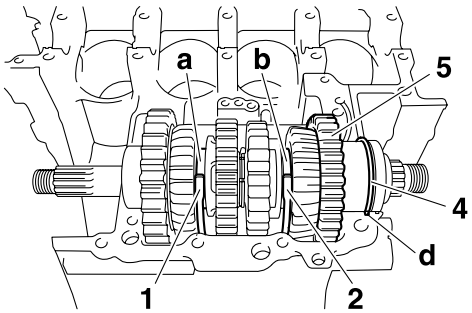

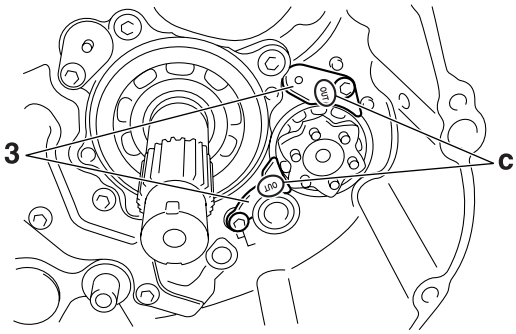

5. Check:
   - Transmission
     Rough movement → Repair.

TIP
Oil each gear, shaft, and bearing thoroughly.

COOLING SYSTEM

EAS26380
RADIATOR

Removing the radiator

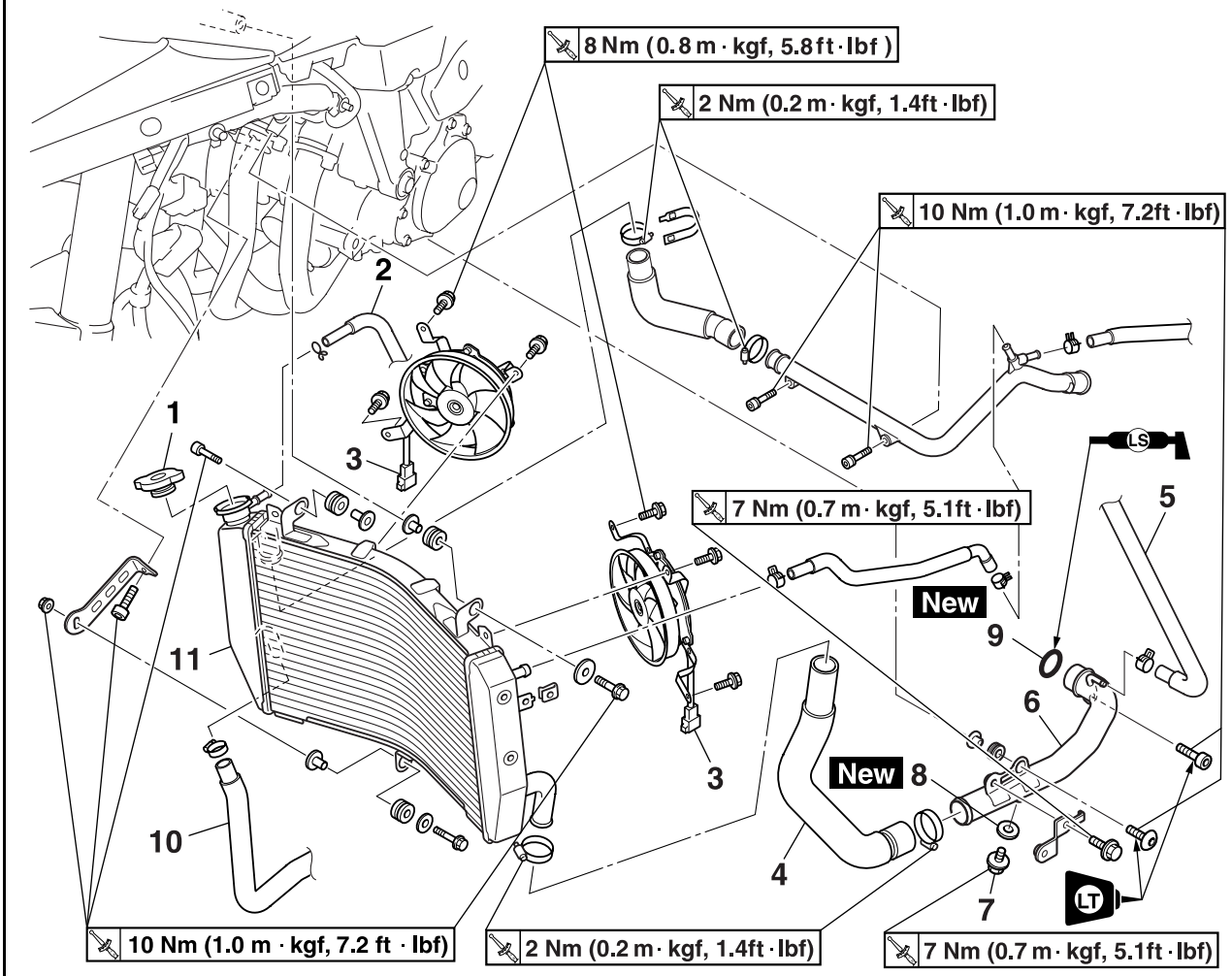

Order	Job/Parts to remove	Q'ty	Remarks
	Coolant		Drain. Refer to "CHANGING THE COOLANT" on page 3-30.
	ECU		Refer to "GENERAL CHASSIS" on page 4-1.
	Side cowling		Refer to "GENERAL CHASSIS" on page 4-1.
	Rectifier/regulator		Refer to "GENERAL CHASSIS" on page 4-1.
1	Radiator cap	1	
2	Coolant reservoir hose	1	Disconnect.
3	Radiator fan motor coupler	2	Disconnect.
4	Radiator outlet hose	1	
5	Water pump bypass hose	1	Disconnect.
6	Water pump inlet pipe	1	
7	Drain bolt	1	
8	Copper washer	1	
9	O-ring	1	
10	Oil cooler outlet hose	1	Disconnect.
11	Radiator	1	

Removing the radiator

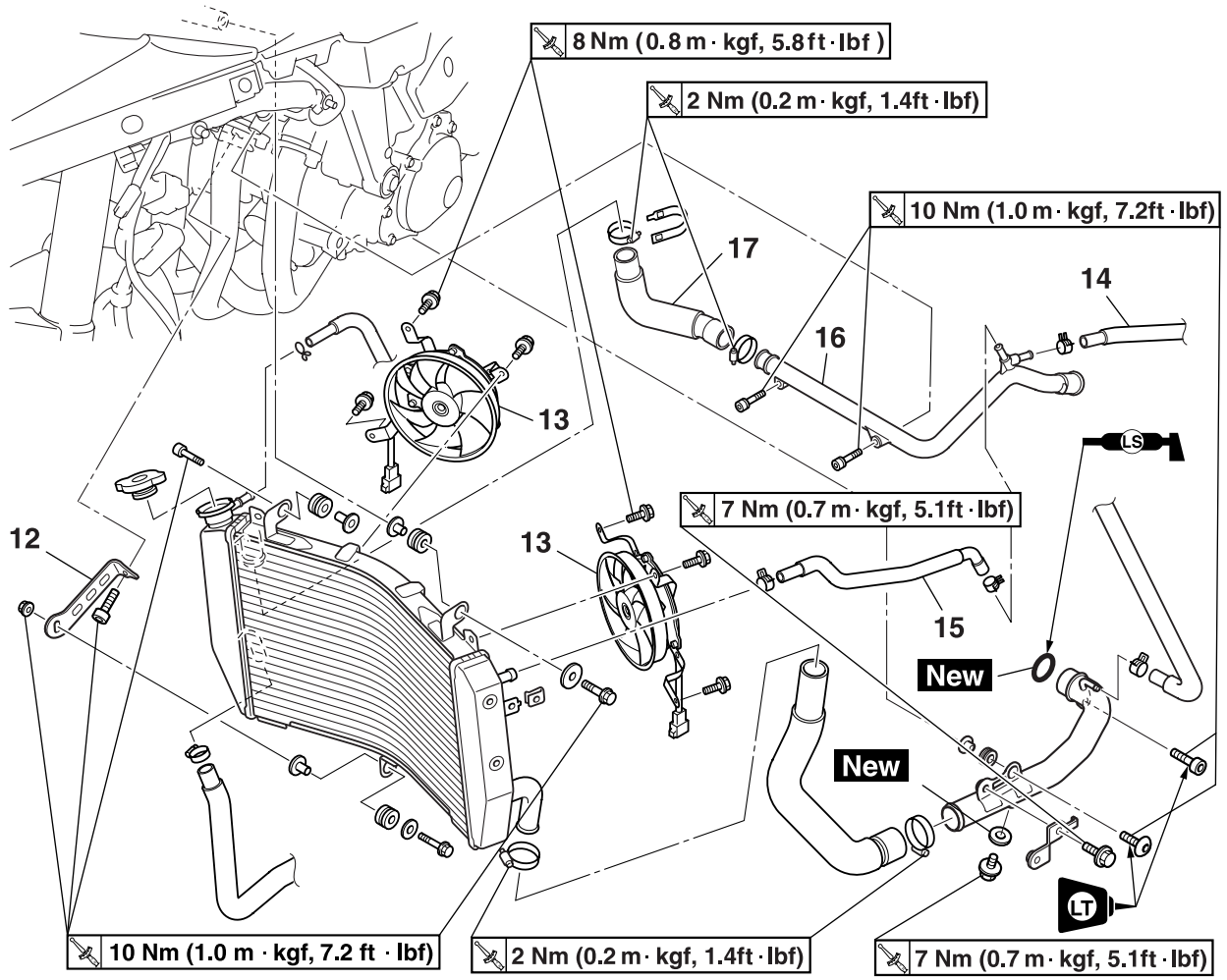

Order	Job/Parts to remove	Q'ty	Remarks
12	Radiator bracket	1	
13	Radiator fan	2	
14	Thermostat bypass hose 2	1	Disconnect.
15	Thermostat bypass hose 3	1	
16	Radiator inlet pipe	1	
17	Radiator inlet hose	1	
			For installation, reverse the removal procedure.

EAS26390
CHECKING THE RADIATOR

1. Check:
   - Radiator fins
     Obstruction → Clean.
     Apply compressed air to the rear of the radiator.
     Damage → Repair or replace.

TIP
Straighten any flattened fins with a thin, flat-head screwdriver.

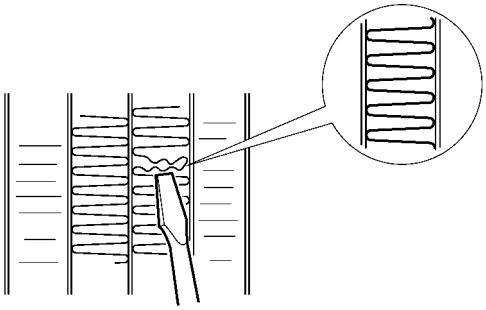

2. Check:
   - Radiator hoses
   - Radiator pipes
     Cracks/damage → Replace.
3. Measure:
   - Radiator cap opening pressure
     Below the specified pressure → Replace the radiator cap.

Radiator cap opening pressure
107.9–137.3 kPa (1.08–1.37 kgf/cm², 15.6–19.9 psi)

▼▼▼▼▼▼▼▼▼▼▼▼▼▼▼▼▼▼▼▼▼▼▼▼▼▼▼▼▼▼▼▼

a. Install the radiator cap tester “1” and radiator cap tester adapter “2” to the radiator cap “3”.

Radiator cap tester
90890-01325
Radiator pressure tester
YU-24460-01
Radiator cap tester adapter
90890-01352
Radiator pressure tester adapter
YU-33984

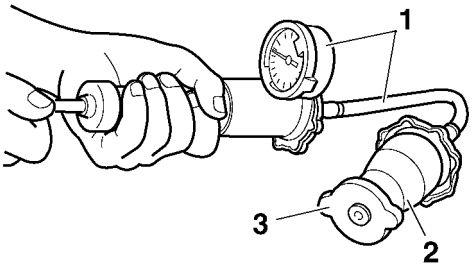

b. Apply the specified pressure for ten seconds and make sure there is no drop in pressure.

▲▲▲▲▲▲▲▲▲▲▲▲▲▲▲▲▲▲▲▲▲▲▲▲▲▲▲▲▲▲▲▲

4. Check:
   - Radiator fan
     Damage → Replace.
     Malfunction → Check and repair.
     Refer to “COOLING SYSTEM” on page 8-29.

EAS26400
INSTALLING THE RADIATOR

1. Fill:
   - Cooling system
     (with the specified amount of the recommended coolant)
     Refer to “CHANGING THE COOLANT” on page 3-30.
2. Check:
   - Cooling system
     Leaks → Repair or replace any faulty part.

▼▼▼▼▼▼▼▼▼▼▼▼▼▼▼▼▼▼▼▼▼▼▼▼▼▼▼▼▼▼▼▼

a. Attach the radiator cap tester “1” and radiator cap tester adapter “2” to the radiator.

Radiator cap tester
90890-03125
Radiator pressure tester
YU-24460-01
Radiator cap tester adapter
90890-01352
Radiator pressure tester adapter
YU-33984

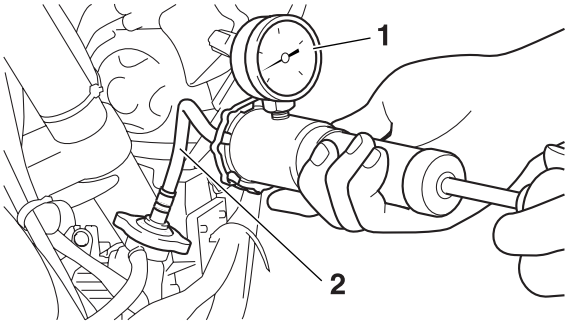

b. Apply 137.3 kPa (1.37 kgf/cm^2, 19.9 psi) of pressure.
c. Measure the indicated pressure with the gauge.

▲▲▲▲▲▲▲▲▲▲▲▲▲▲▲▲▲▲▲▲▲▲▲▲▲▲▲▲▲▲▲▲

3. Measure:
   - Radiator cap opening pressure
     Below the specified pressure → Replace the radiator cap.
     Refer to “CHECKING THE RADIATOR” on page 6-3.

EAS26410
OIL COOLER

Removing the oil cooler

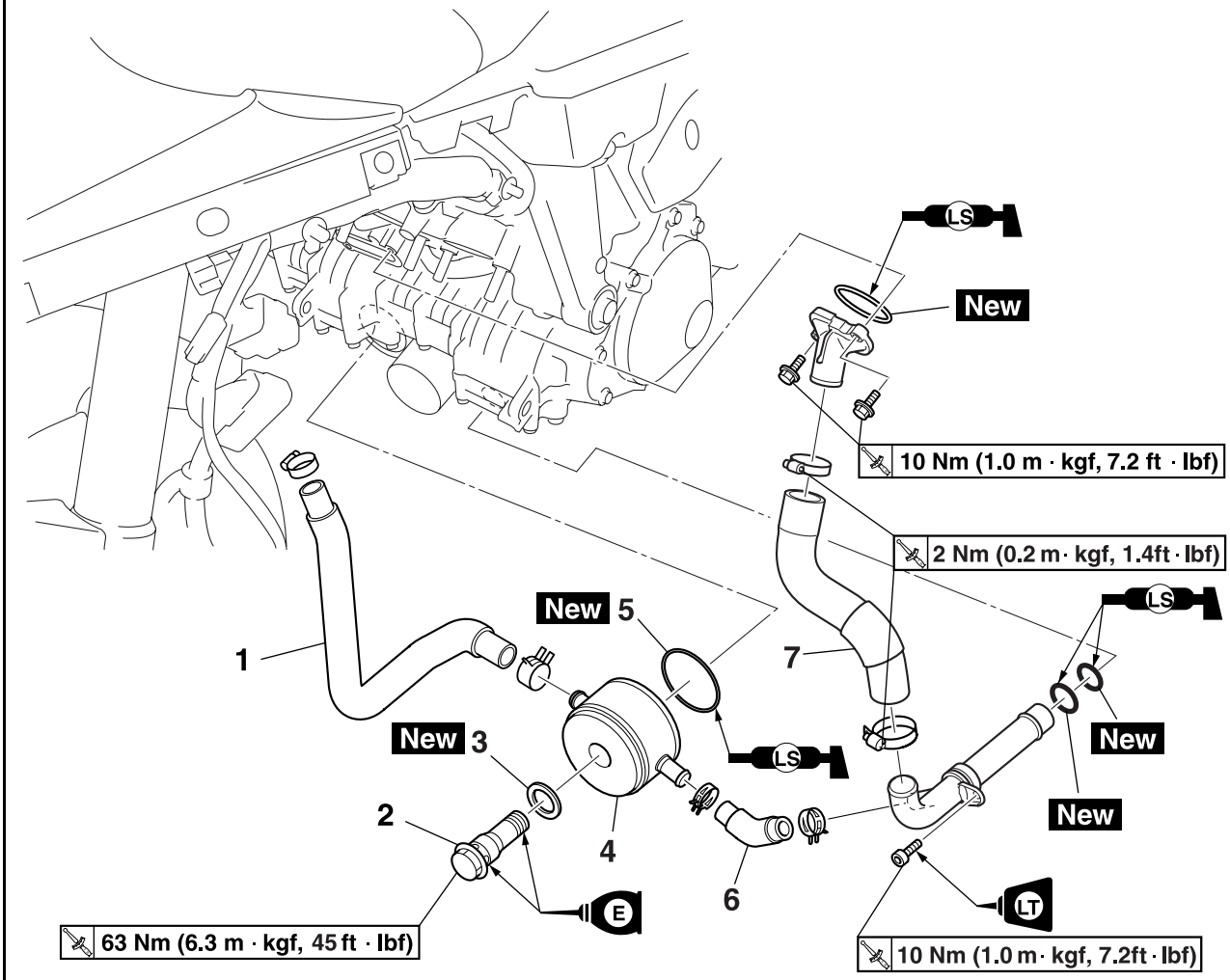

Order	Job/Parts to remove	Q'ty	Remarks
	Coolant		Drain. Refer to "CHANGING THE COOLANT" on page 3-30.
	Engine oil		Drain. Refer to "CHANGING THE ENGINE OIL" on page 3-27.
	Side cowling		Refer to "GENERAL CHASSIS" on page 4-1.
	Lower cowling		Refer to "GENERAL CHASSIS" on page 4-1.
	ECU		Refer to "GENERAL CHASSIS" on page 4-1.
	Rectifier/regulator		Refer to "GENERAL CHASSIS" on page 4-1.
	Radiator		Refer to "RADIATOR" on page 6-1.
	Exhaust pipe		Refer to "ENGINE REMOVAL" on page 5-3.
1	Oil cooler outlet hose	1	
2	Oil cooler union bolt	1	
3	Gasket	1	
4	Oil cooler	1	
5	O-ring	1	
6	Oil cooler inlet hose	1	
7	Water jacket joint inlet hose	1	

Removing the oil cooler

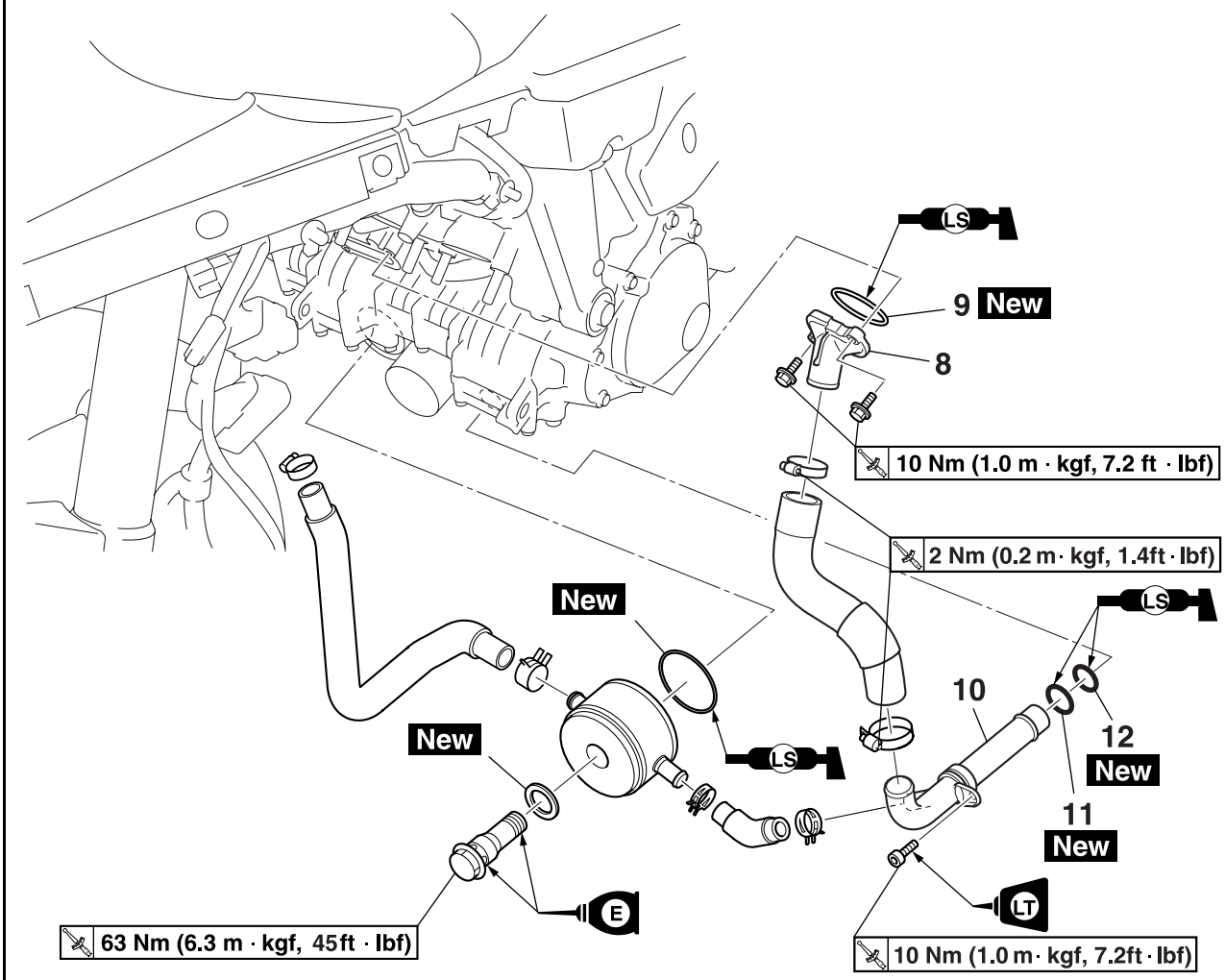

Order	Job/Parts to remove	Q'ty	Remarks
8	Water jacket joint	1	
9	O-ring	1	
10	Water pump outlet pipe	1	
11	O-ring	1	
12	O-ring	1	
			For installation, reverse the removal procedure.

EAS26420
CHECKING THE OIL COOLER

1. Check:
   - Oil cooler
     Cracks/damage → Replace.
2. Check:
   - Oil cooler inlet hose
   - Oil cooler outlet hose
     Cracks/damage/wear → Replace.
3. Check:
   - Water jacket joint inlet hose
   - Water jacket joint
   - Water pump outlet pipe
     Cracks/damage/wear → Replace.

EAS26430
INSTALLING THE OIL COOLER

1. Clean:
   - Mating surfaces of the oil cooler and the crankcase
     (with a cloth dampened with lacquer thinner)
2. Install:
   - O-ring New
   - Oil cooler

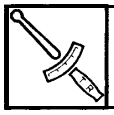	**Oil cooler union bolt** **63 Nm (6.3 m·kgf, 45 ft·lbf)**

TIP
- Before installing the oil cooler, lubricate the oil cooler union bolt and O-ring with a thin coat of engine oil.
- Make sure the O-ring is positioned properly.
- Make sure the projection “a” on the oil cooler touches the projection “b” on the crankcase.

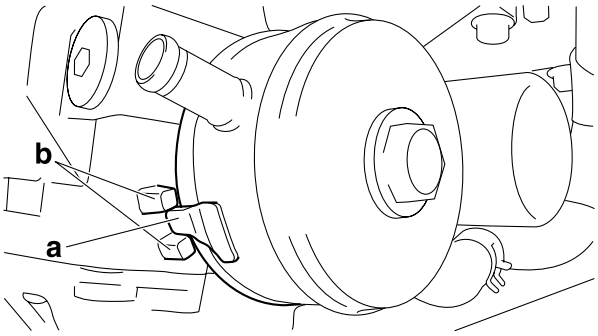

3. Fill:
   - Cooling system
     (with the specified amount of the recommended coolant)
     Refer to “CHANGING THE COOLANT” on page 3-30.
   - Crankcase
     (with the specified amount of the recommended engine oil)
     Refer to “CHANGING THE ENGINE OIL” on page 3-27.
4. Check:
   - Cooling system
     Leaks → Repair or replace any faulty part.
     Refer to “INSTALLING THE RADIATOR” on page 6-3.
5. Measure:
   - Radiator cap opening pressure
     Below the specified pressure → Replace the radiator cap.
     Refer to “CHECKING THE RADIATOR” on page 6-3.

EAS26440
THERMOSTAT

Removing the thermostat

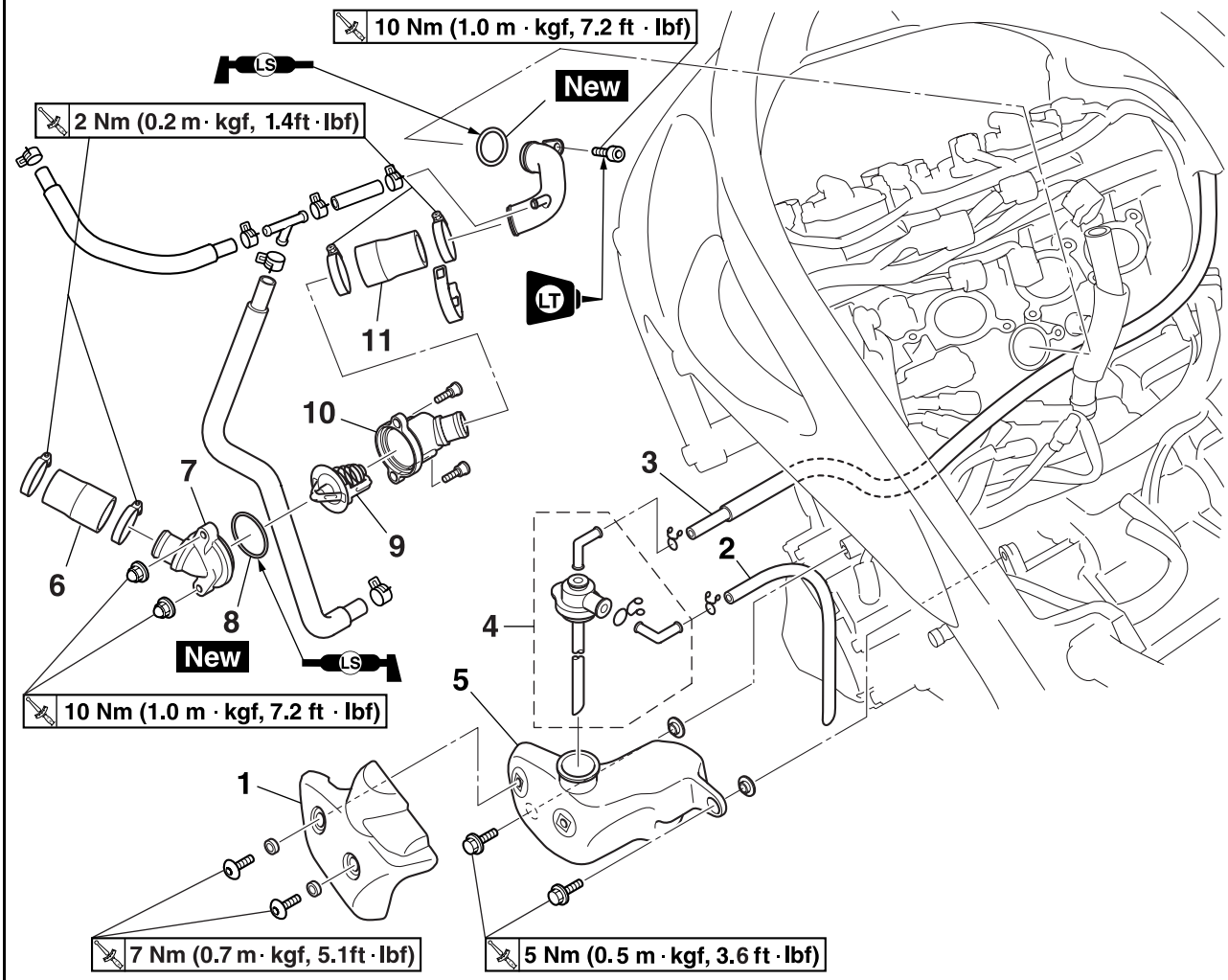

Order	Job/Parts to remove	Q'ty	Remarks
	Coolant		Drain. Refer to "CHANGING THE COOLANT" on page 3-30.
	Fuel tank		Refer to "FUEL TANK" on page 7-1.
	Air filter case		Refer to "AIR FILTER CASE" on page 7-5.
	Throttle body		Refer to "THROTTLE BODIES" on page 7-11.
1	Coolant reservoir cover	1	
2	Coolant reservoir breather hose	1	
3	Coolant reservoir hose	1	
4	Coolant reservoir cap	1	
5	Coolant reservoir tank	1	
6	Thermostat outlet hose	1	
7	Thermostat housing cover	1	
8	O-ring	1	
9	Thermostat	1	
10	Thermostat housing	1	
11	Thermostat inlet hose	1	

Removing the thermostat

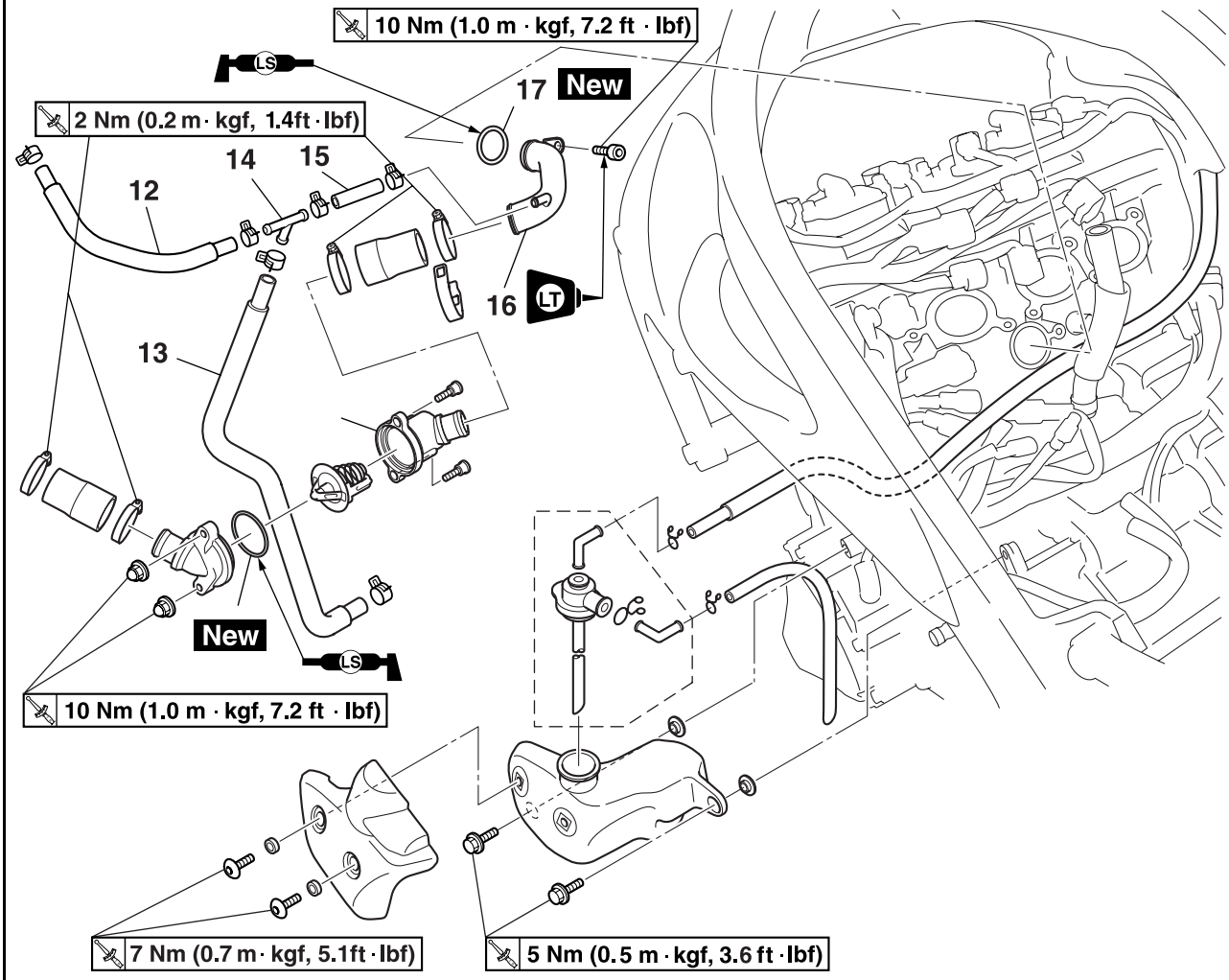

Order	Job/Parts to remove	Q'ty	Remarks
12	Thermostat bypass hose 2	1	
13	Water pump bypass hose	1	
14	Joint	1	
15	Thermostat bypass hose 1	1	
16	Engine outlet pipe	1	
17	O-ring	1	
			For installation, reverse the removal procedure.

EAS26450
CHECKING THE THERMOSTAT

1. Check:
   - Thermostat “1”
     Does not open at 71–85 °C (159.8–185.0 °F) → Replace.

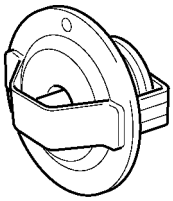

▼▼▼▼▼▼▼▼▼▼▼▼▼▼▼▼▼▼▼▼▼▼▼▼▼▼▼▼▼▼▼▼▼▼

a. Suspend the thermostat “1” in a container “2” filled with water.
b. Slowly heat the water “3”.
c. Place a thermometer “4” in the water.
d. While stirring the water, observe the thermostat and thermometer’s indicated temperature.

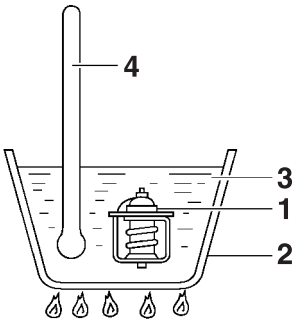

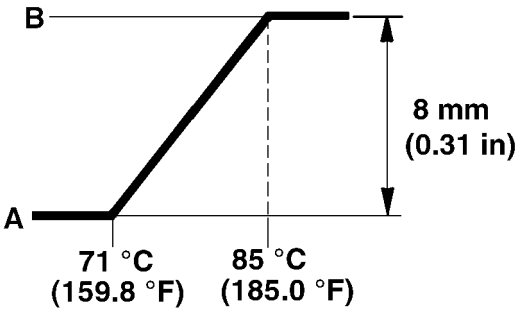

A. Fully closed
B. Fully open

TIP

If the accuracy of the thermostat is in doubt, replace it. A faulty thermostat could cause serious overheating or overcooling.

▲▲▲▲▲▲▲▲▲▲▲▲▲▲▲▲▲▲▲▲▲▲▲▲▲▲▲▲▲▲▲▲▲▲

2. Check:
   - Thermostat housing cover “1”
   - Thermostat housing “2”
     Cracks/damage → Replace.

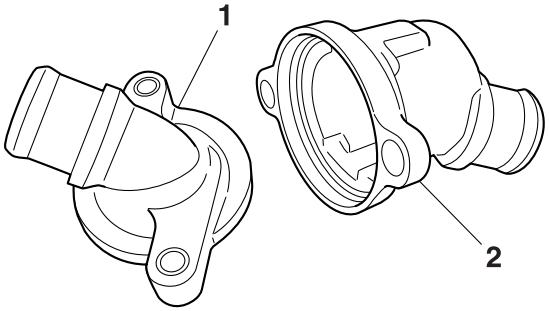

3. Check:
   - Thermostat hoses
   - Thermostat bypass hoses
   - Water pump bypass hose
   - Engine outlet pipe
     Cracks/damage → Replace.

EAS26460
ASSEMBLING THE THERMOSTAT ASSEMBLY

1. Install:
   - Thermostat housing “1”
   - Thermostat “2”
   - O-ring “3” New
   - Thermostat housing cover “4”

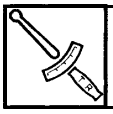	**Thermostat housing cover nut 10 Nm (1.0 m·kgf, 7.2 ft·lbf)**

TIP

Install the thermostat with its breather hole “a” facing up.

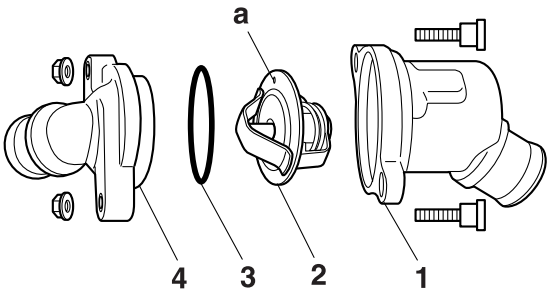

EAS26480

INSTALLING THE THERMOSTAT ASSEMBLY

1. Fill:
   - Cooling system
     (with the specified amount of the recommended coolant)
     Refer to “CHANGING THE COOLANT” on page 3-30.
2. Check:
   - Cooling system
     Leaks → Repair or replace any faulty part.
     Refer to “INSTALLING THE RADIATOR” on page 6-3.
3. Measure:
   - Radiator cap opening pressure
     Below the specified pressure → Replace the radiator cap.
     Refer to “CHECKING THE RADIATOR” on page 6-3.

EAS26500
WATER PUMP

Disassembling the water pump

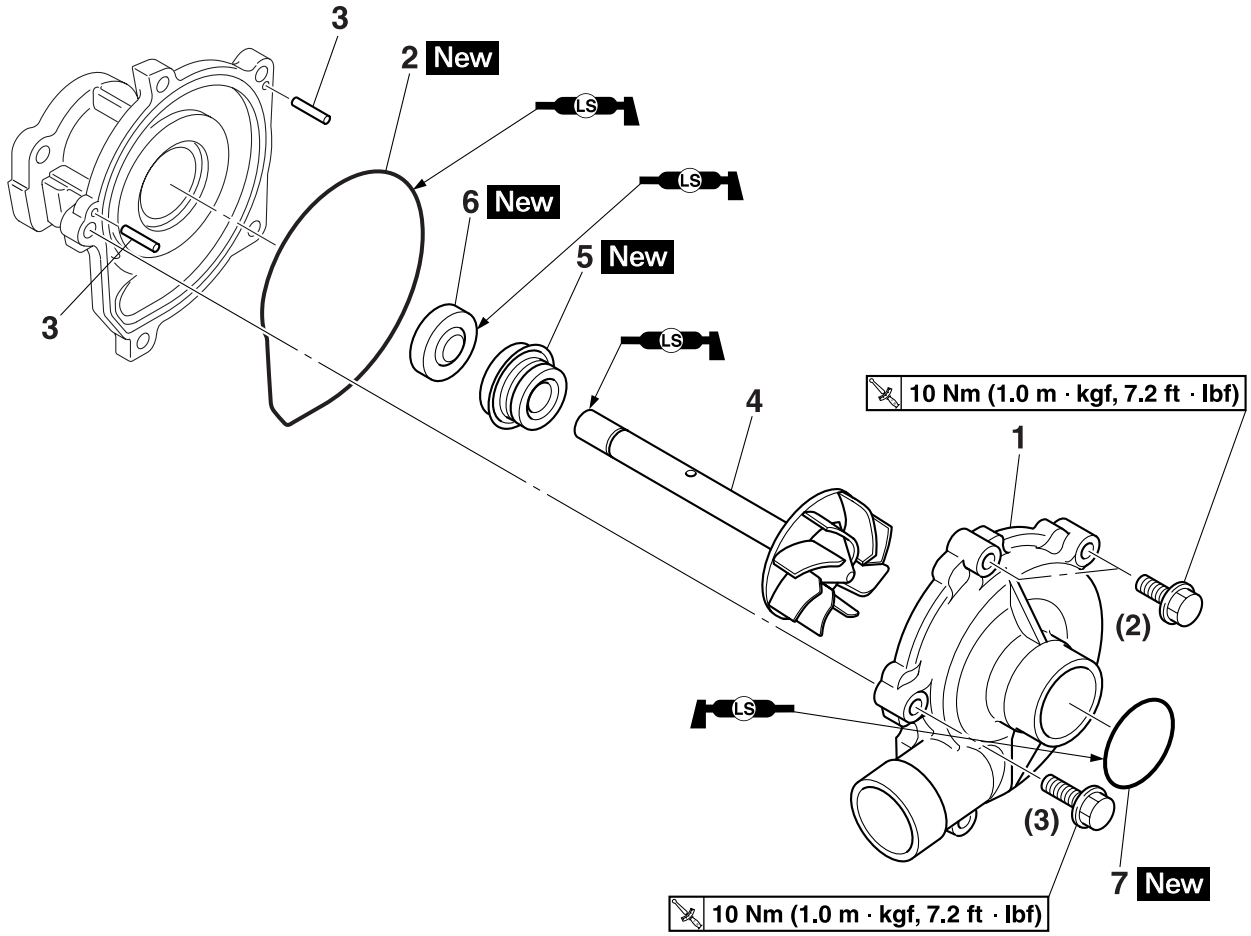

Order	Job/Parts to removes	Q'ty	Remarks
	Oil/water pump assembly		Refer to "OIL PUMP" on page 5-51.
	Oil pump rotor		Refer to "OIL PUMP" on page 5-51.
1	Water pump cover	1	
2	O-ring	1	
3	Pin	2	
4	Impeller shaft (along with the impeller)	1	
5	Water pump seal	1	
6	Oil seal	1	
7	O-ring	1	
			For installation, reverse the removal procedure.

EAS26520
DISASSEMBLING THE WATER PUMP

1. Remove:
   - Water pump seal “1”

TIP
Remove the water pump seal from the inside of the water pump housing “2”.

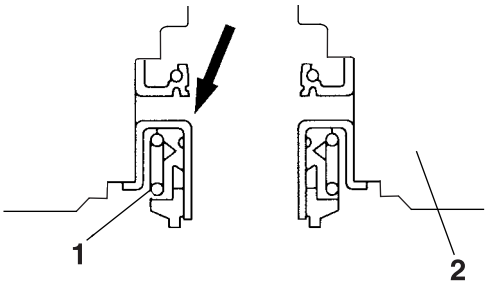

2. Remove:
   - Oil seal “1”
     (with a thin, flat-head screwdriver)

TIP
Remove the oil seal from the inside of the water pump housing “2”.

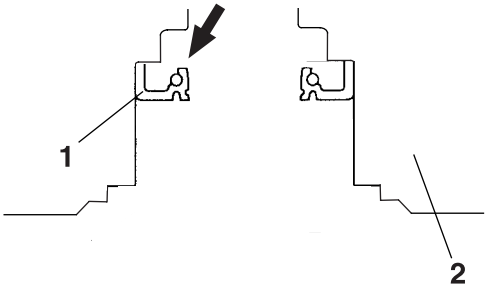

3. Remove:
   - Rubber damper holder “1”
   - Rubber damper “2”
     (with a thin, flat-head screwdriver)

TIP
Do not scratch the impeller shaft.

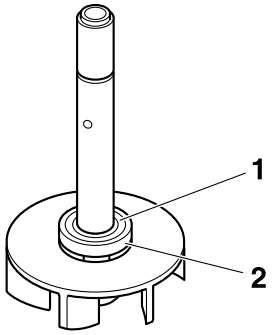

EAS26540
CHECKING THE WATER PUMP

1. Check:
   - Water pump housing cover “1”
   - Impeller “2”
     Cracks/damage/wear → Replace.
   - Water pump housing “3”
     Cracks/damage/wear → Replace the oil/water pump assembly.

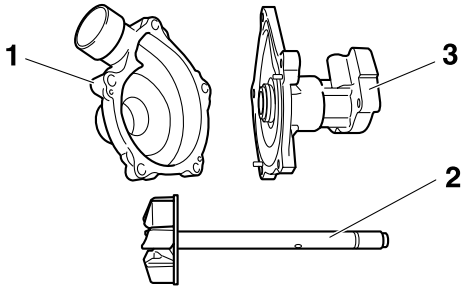

EAS26560
ASSEMBLING THE WATER PUMP

1. Install:
   - Oil seal “1” New
     (into the water pump housing “2”)

Installed depth “a”
17.2 mm (0.68 in)

TIP
- Before installing the oil seal, apply tap water or coolant onto its out surface.
- Install the oil seal with a socket that matches its outside diameter.

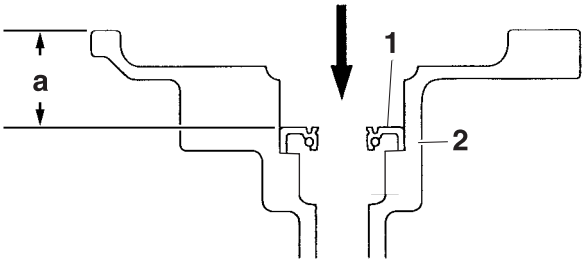

2. Install:
   - Water pump seal “1” New

ECA14080

NOTICE

Never lubricate the water pump seal surface with oil or grease.

TIP

- Install the water pump seal “1” with the special tools.

Mechanical seal installer
90890-04132
Water pump seal installer
YM-33221-A
Middle driven shaft bearing driver
90890-04058
Bearing driver 40 mm
YM-04058

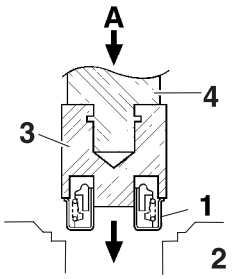

2. Water pump housing
3. Mechanical seal installer
4. Middle driven shaft bearing driver

A. Push down

3. Install:
   - Rubber damper holder “1” New
   - Rubber damper “2” New

TIP

Before installing the rubber damper, apply tap water or coolant onto its outer surface.

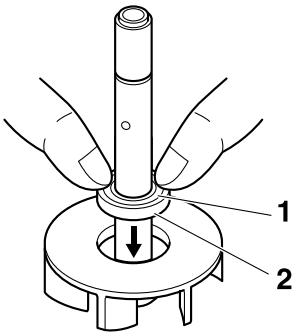

4. Measure:
   - Impeller shaft tilt
     Out of specification → Repeat steps (3) and (4).

ECA14090

NOTICE

Make sure the rubber damper and rubber damper holder are flush with the impeller.

Impeller shaft tilt limit
0.15 mm (0.006 in)

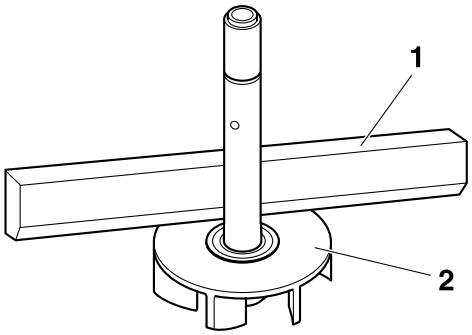

1. Straightedge
2. Impeller

FUEL SYSTEM

EAS26620

FUEL TANK

Removing the fuel tank and fuel pump

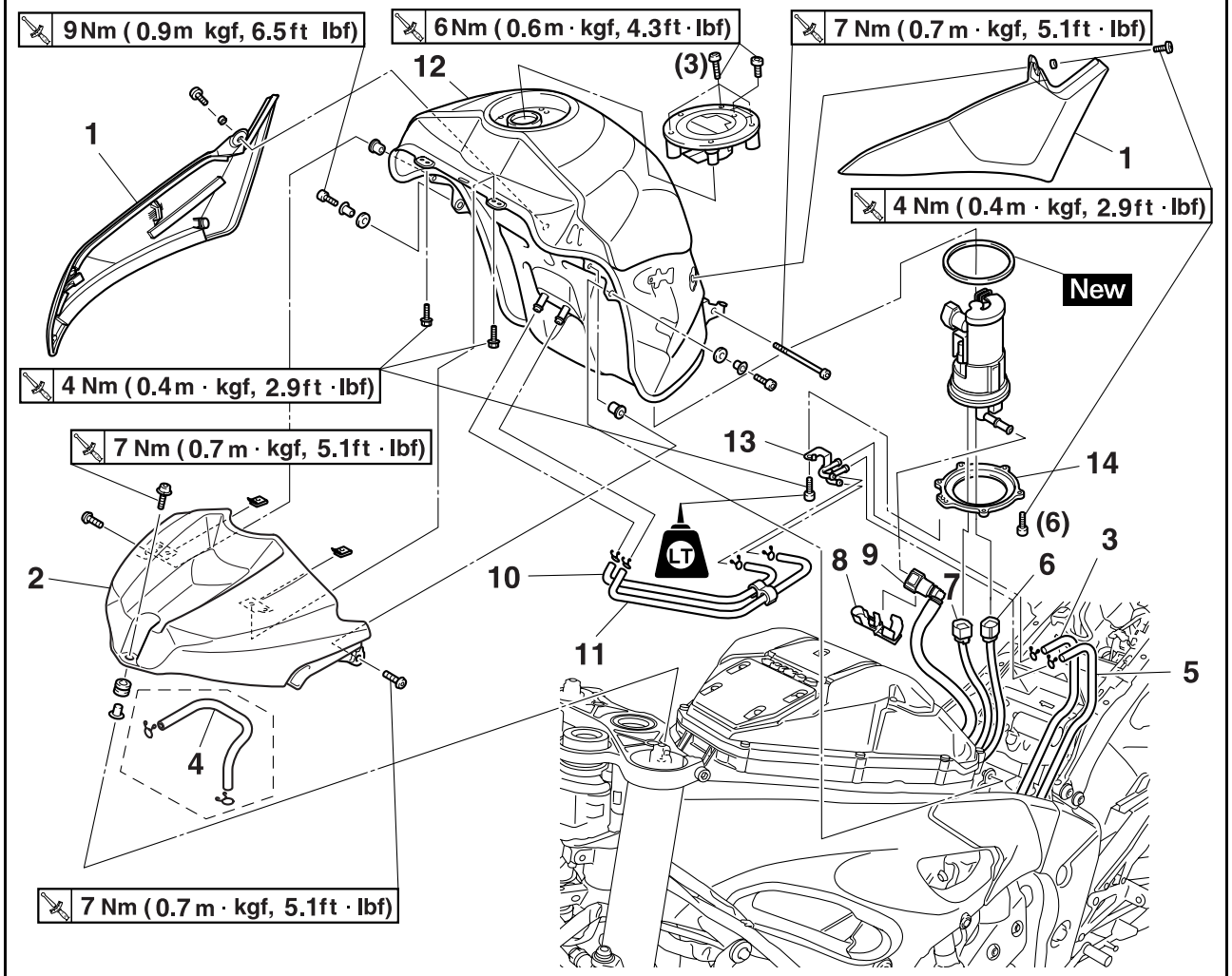

Order	Job/Parts to remove	Q'ty	Remarks
	Rider seat		Refer to "GENERAL CHASSIS" on page 4-1.
1	Fuel tank side cover	2	
2	Fuel tank upper cover	1	
3	Fuel tank breather hose	1	Except for California Disconnect.
4	Fuel tank breather hose (hose joint to rollover valve)	1	For California only
5	Fuel tank overflow hose	1	Disconnect.
6	Fuel pump coupler	1	Disconnect.
7	Fuel sender coupler	1	Disconnect.
8	Fuel hose connector cover	1	
9	Fuel hose (fuel tank side)	1	Disconnect.
10	Fuel tank breather hose (fuel tank to hose joint)	1	
11	Fuel tank overflow hose (fuel tank to hose joint)	1	
12	Fuel tank	1	
13	Hose joint	1	
14	Fuel pump bracket	1	

Removing the fuel tank and fuel pump

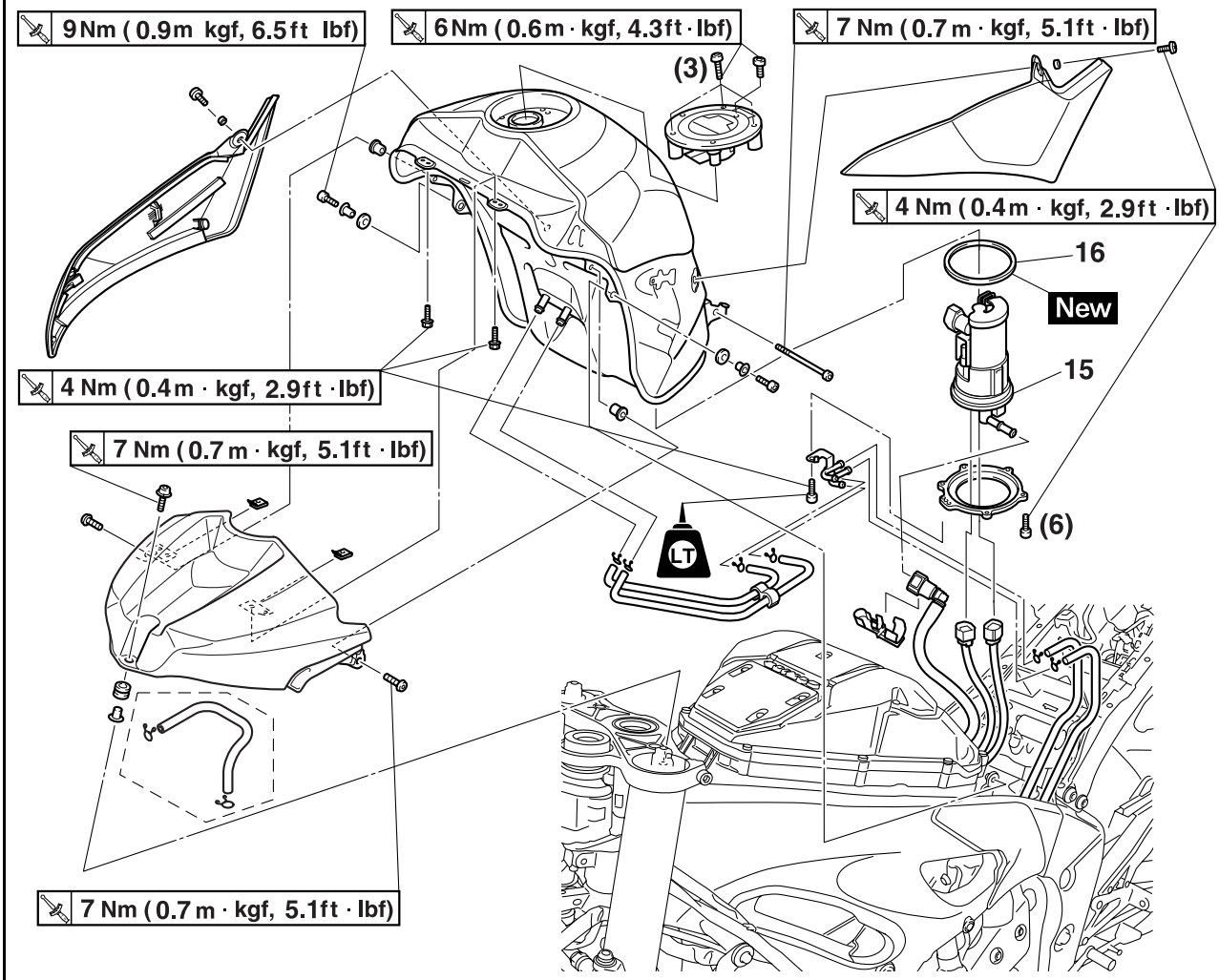

Order	Job/Parts to remove	Q'ty	Remarks
15	Fuel pump	1	
16	Fuel pump gasket	1	
			For installation, reverse the removal procedure.

EAS14B1078
REMOVING THE FUEL TANK SIDE COVERS

The following procedure applies to both of the fuel tank side covers.

1. Remove:
   - Fuel tank side cover “1”

▼▼▼▼▼▼▼▼▼▼▼▼▼▼▼▼▼▼▼▼▼▼▼▼▼▼▼▼▼▼▼▼▼▼

a. Remove the screw on the fuel tank side cover.
b. Slide the fuel tank side cover to the front and then remove the three tabs “a”.

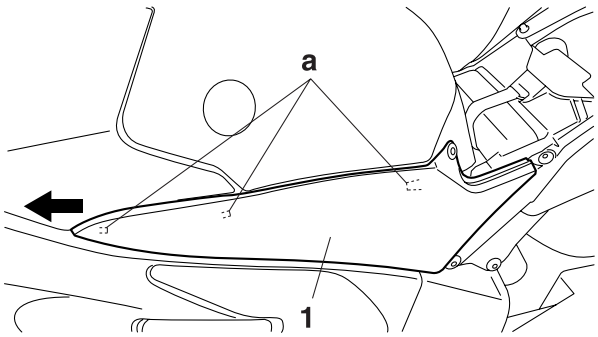

▲▲▲▲▲▲▲▲▲▲▲▲▲▲▲▲▲▲▲▲▲▲▲▲▲▲▲▲▲▲▲▲▲▲

EAS26630
REMOVING THE FUEL TANK

1. Extract the fuel in the fuel tank through the fuel tank cap with a pump.
2. Remove:
   - Fuel tank breather hose
   - Fuel tank overflow hose
   - Fuel pump coupler
   - Fuel sender coupler
   - Fuel hose connector cover
   - Fuel hose

EWA14B1001

WARNING

Cover fuel hose connections with a cloth when disconnecting them. Residual pressure in the fuel lines could cause fuel to spurt out when removing the hoses.

ECA14B1003

NOTICE

Be sure to disconnect the fuel hose by hand. Do not forcefully disconnect the hose with tools.

TIP

- To remove the fuel hose from the fuel pump, press the two buttons “1” on the sides of the connector, and then remove the hose.
- Before removing the hoses, place a few rags in the area under where it will be removed.

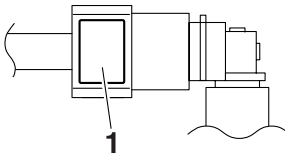

3. Remove:
   - Fuel tank

TIP

Do not set the fuel tank down so that the installation surface of the fuel pump is directly under the tank. Be sure to lean the fuel tank in an upright position.

EAS26640
REMOVING THE FUEL PUMP

1. Remove:
   - Fuel pump

ECA14720

NOTICE

- **Do not drop the fuel pump or give it a strong shock.**
- **Do not touch the base section of the fuel sender.**

EAS26670
CHECKING THE FUEL PUMP BODY

1. Check:
   - Fuel pump body
     Obstruction → Clean.
     Cracks/damage → Replace fuel pump assembly.

EAS26690
CHECKING THE FUEL PUMP OPERATION

1. Check:
   - Fuel pump operation
     Refer to “CHECKING THE FUEL PRESSURE” on page 7-18.

EAS26710
INSTALLING THE FUEL PUMP

1. Install:
   - Fuel pump gasket New
   - Fuel pump
   - Fuel pump bracket

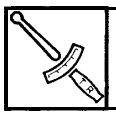

Fuel pump bracket bolt
4 Nm (0.4 m·kgf, 2.9 ft·lbf)

TIP

- Do not damage the installation surfaces of the fuel tank when installing the fuel pump.
- Always use a new fuel pump gasket.
- Install the fuel pump gasket so that the lip side turns to the inside of the fuel tank.
- Install the fuel pump as shown in the illustration.
- Align the projection “a” on the fuel pump with the slot in the fuel pump bracket.
- Tighten the fuel pump bolts in the proper tightening sequence as shown.

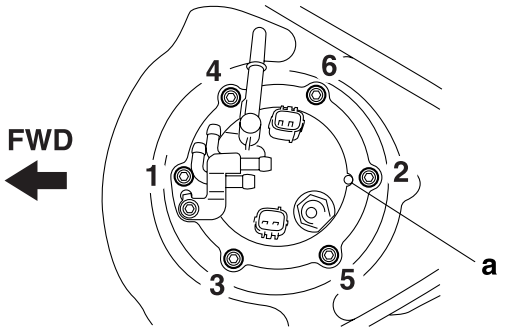

ET2C01010

INSTALLING THE FUEL TANK

1. Connect:
   - Fuel tank breather hose (fuel tank to hose joint) “1”
   - Fuel tank overflow hose (fuel tank to hose joint) “2”
   - Fuel tank breather hose “3”
   - Fuel tank overflow hose “4”

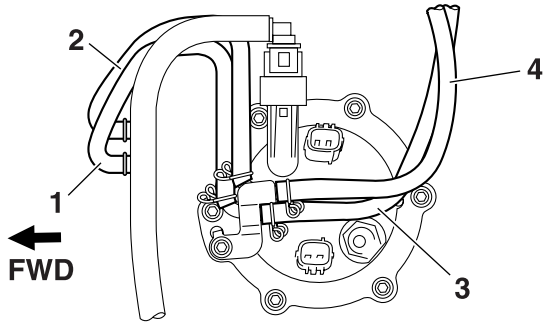

2. Connect:
   - Fuel hose (fuel tank side)

ECA14B1033

NOTICE

When installing the fuel hose, make sure that it is securely connected, and that the fuel hose connector cover on the fuel hose is in the correct position, otherwise the fuel hose will not be properly installed.

TIP

Install the fuel hose securely onto the fuel pump until a distinct “click” is heard.

- Fuel hose connector cover

TIP

Attach the fuel hose connector cover “1” to the fuel hose connector “2” from the bottom. Make sure that parts “a” are firmly attached to the fuel hose connector “2”.

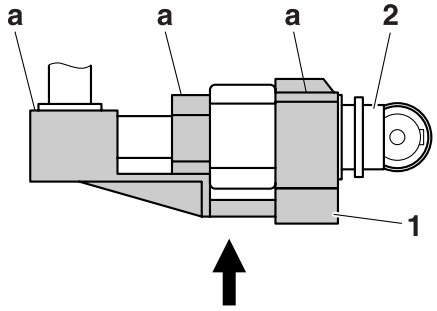

3. Connect:
   - Fuel sender coupler
   - Fuel pump coupler
   - Fuel tank overflow hose
   - Fuel tank breather hose

EAS14B1079

INSTALLING THE FUEL TANK SIDE COVERS

The following procedure applies to both of the fuel tank side covers.

1. Install:
   - Fuel tank side cover “1”

▼▼▼▼▼▼▼▼▼▼▼▼▼▼▼▼▼▼▼▼▼▼▼▼▼▼▼▼▼▼▼▼▼▼

a. Fit the tabs “a” of the fuel tank side cover.
b. Slide the fuel tank side cover to the rear and then fit the tabs.

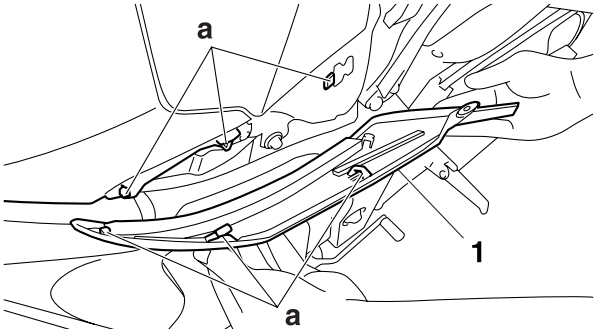

c. Install the screw on the fuel tank side cover.

▲▲▲▲▲▲▲▲▲▲▲▲▲▲▲▲▲▲▲▲▲▲▲▲▲▲▲▲▲▲▲▲▲▲

EAS14B1062

AIR FILTER CASE

Removing the air filter case and secondary injectors

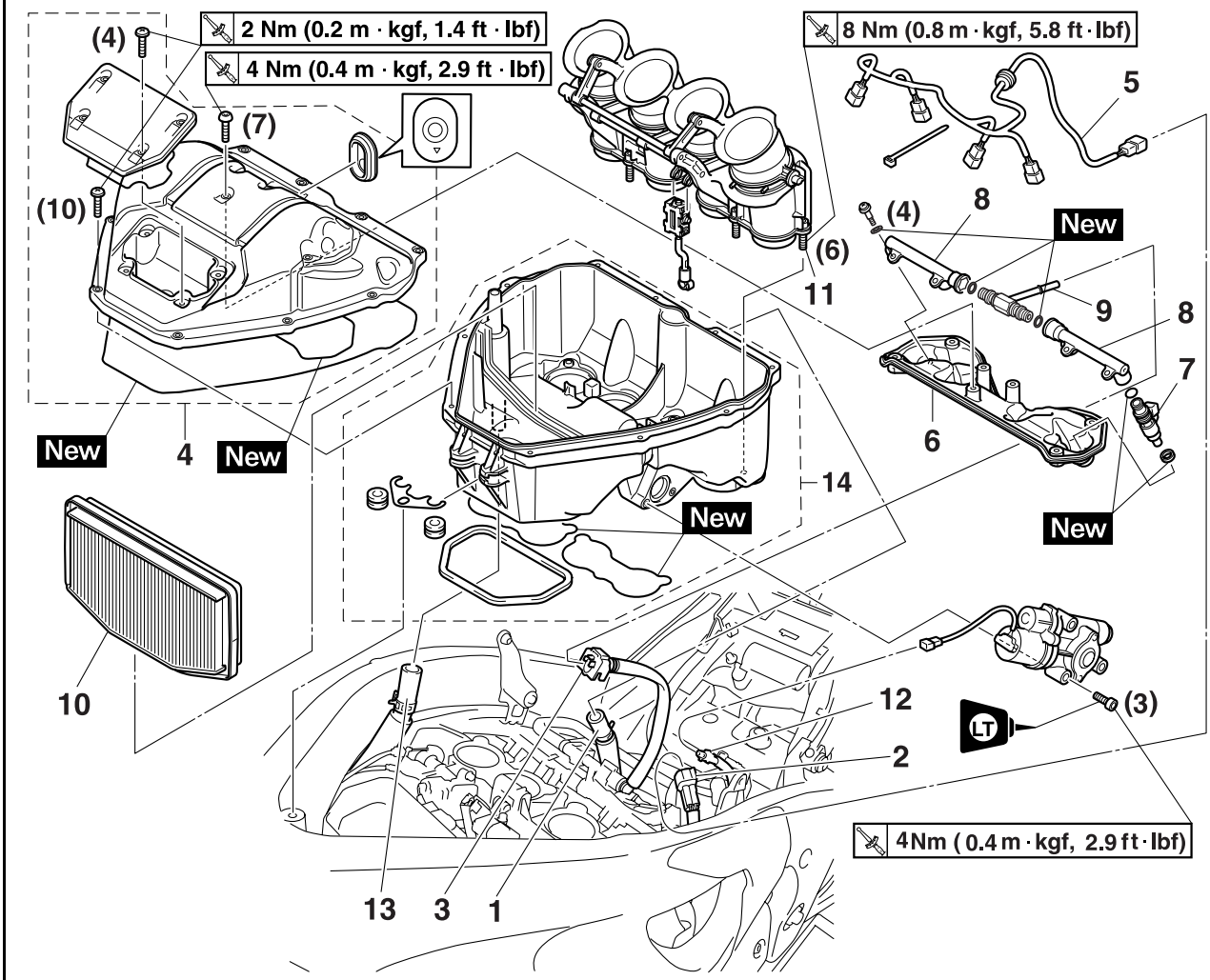

Order	Job/Parts to remove	Q'ty	Remarks
	Fuel tank		Refer to "FUEL TANK" on page 7-1.
1	Crankcase breather hose	1	Disconnect.
2	Sub-wire harness coupler	1	Disconnect.
3	Fuel hose (secondary injector fuel rail side)	1	Disconnect.
4	Upper air filter case	1	
5	Sub-wire harness	1	
6	Secondary injector holder	1	
7	Secondary injector	4	
8	Fuel rail	2	
9	Secondary injector joint	1	
10	Air filter element	1	
11	Intake funnel joint bolt	6	Loosen.
12	Intake funnel servo motor coupler	1	Disconnect.
13	Air induction system hose (air filter case to air cut-off valve)	1	Disconnect.
14	Lower air filter case	1	

Removing the air filter case and secondary injectors

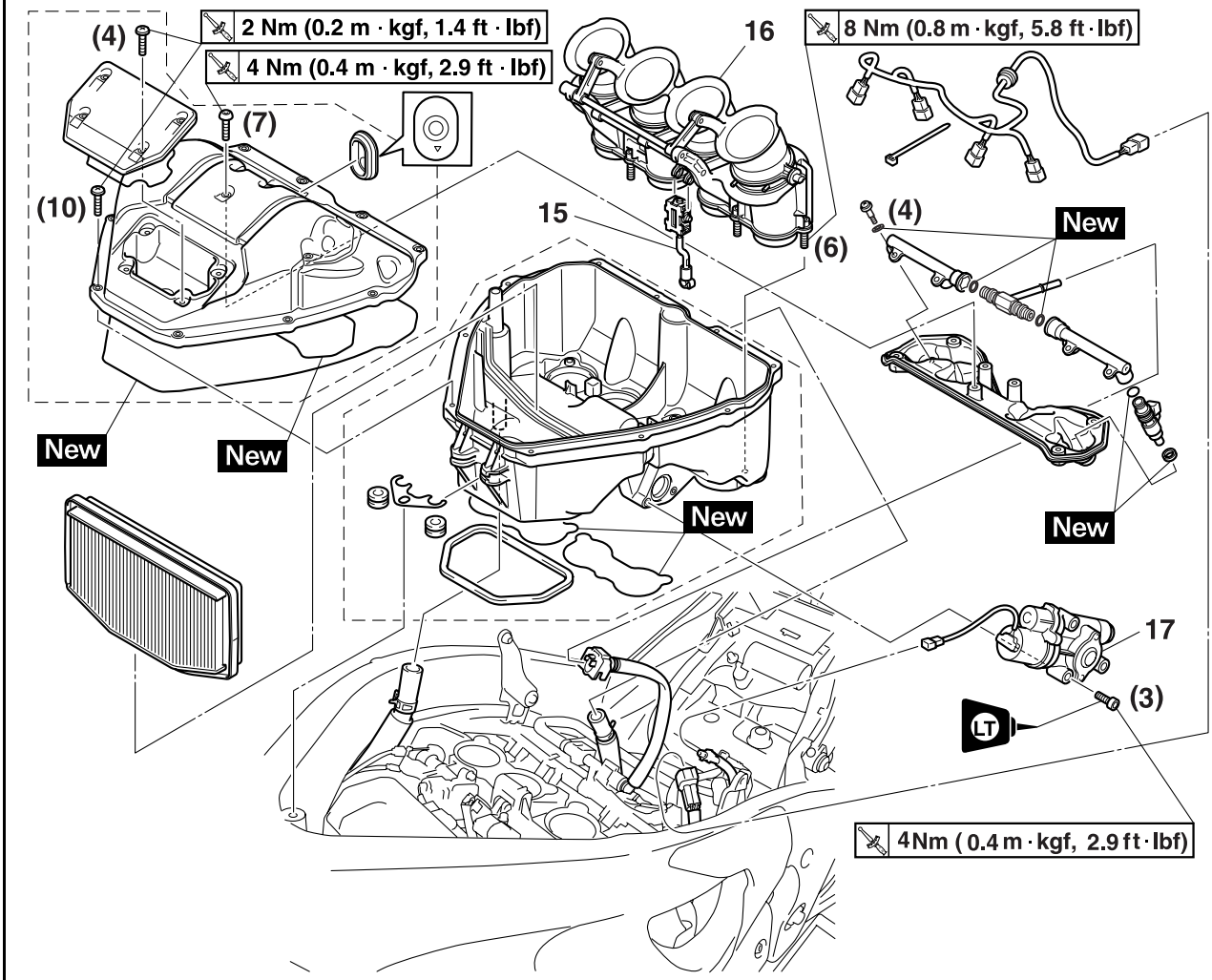

Order	Job/Parts to remove	Q'ty	Remarks
15	Intake funnel servo motor rod assembly	1	
16	Intake funnel assembly	1	
17	Intake funnel servo motor	1	
			For installation, reverse the removal procedure.

EAS14B4003
CHECKING THE SECONDARY INJECTORS (BEFORE REMOVING)

1. Check:
   - Injectors
     Use the diagnostic code number “D:40–D:43”.
     Refer to “DIAGNOSTIC MODE” on page 8-38.

EAS14B1063
REMOVING THE FUEL HOSE (PRIMARY INJECTOR JOINT SIDE AND SECONDARY INJECTOR JOINT SIDE)

1. Remove:
   - Fuel hose (primary injector joint side and secondary injector joint side)

EWA14B1001
WARNING

Cover fuel hose connections with a cloth when disconnecting them. Residual pressure in the fuel lines could cause fuel to spurt out when removing the hoses.

ECA14B1003
NOTICE

Be sure to disconnect the fuel hose by hand. Do not forcefully disconnect the hose with tools.

TIP
- To remove the fuel hose from the secondary injector joint, slide the fuel hose connector cover “1” on the end of the hose in the direction of the arrow shown, press the two buttons “2” on the sides of the connector, and then remove the hose.
- Before removing the hose, place a few rags in the area under where it will be removed.

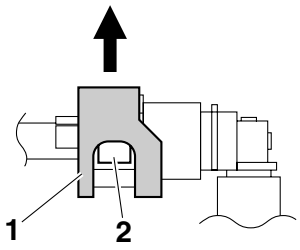

EAS14B4004
REMOVING THE SECONDARY INJECTORS

EWA14B4001
WARNING

- **Check the injectors in a well-ventilated area free of combustible materials. Make sure that there is no smoking or use of electric tools in the vicinity of the injectors.**
- **Be careful when disconnecting the fuel hoses. Any remaining pressure in the fuel hoses may cause the fuel to spray out. Place a container or rag under the hoses to catch any fuel that spills. Always clean up any spilt fuel immediately.**
- **Turn the main switch to “OFF” and disconnect the negative battery lead from the battery terminal before checking the injectors.**

1. Remove:
   - Fuel tank
   - Fuel connector
2. Remove:
   - Upper air filter case

▼▼▼▼▼▼▼▼▼▼▼▼▼▼▼▼▼▼▼▼▼▼▼▼▼▼▼▼▼▼▼▼

a. Remove the upper air filter case bolts “1” as shown.

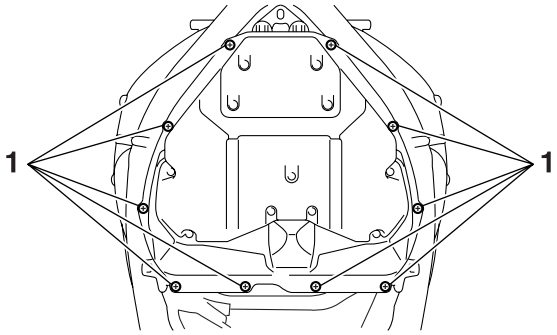

▲▲▲▲▲▲▲▲▲▲▲▲▲▲▲▲▲▲▲▲▲▲▲▲▲▲▲▲▲▲▲▲

3. Remove:
   - Secondary injector assembly

▼▼▼▼▼▼▼▼▼▼▼▼▼▼▼▼▼▼▼▼▼▼▼▼▼▼▼▼▼▼▼▼

a. Remove the secondary injector assembly bolts “1” as shown.

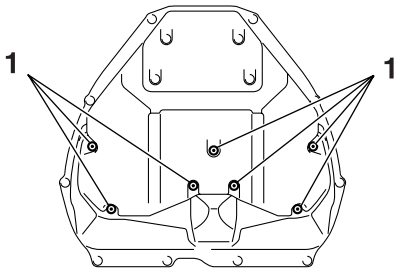

▲▲▲▲▲▲▲▲▲▲▲▲▲▲▲▲▲▲▲▲▲▲▲▲▲▲▲▲▲▲▲▲

4. Remove:
   - Sub-wire harness
   - Secondary injectors

▼▼▼▼▼▼▼▼▼▼▼▼▼▼▼▼▼▼▼▼▼▼▼▼▼▼▼▼▼▼▼▼▼▼

a. Remove the fuel rail screws “1” as shown.

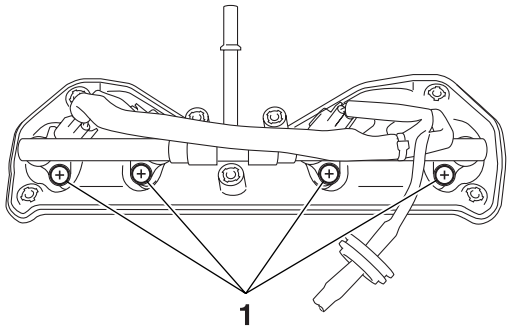

▲▲▲▲▲▲▲▲▲▲▲▲▲▲▲▲▲▲▲▲▲▲▲▲▲▲▲▲▲▲▲▲▲▲

5. Remove:
   - Fuel rails “1”
   - Secondary injector joint “2”

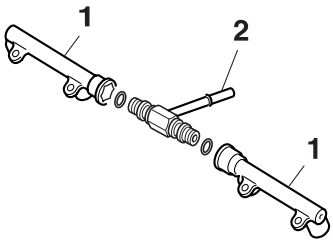

EAS14B1065

REMOVING THE LOWER AIR FILTER CASE

1. Remove:
   - Lower air filter case

▼▼▼▼▼▼▼▼▼▼▼▼▼▼▼▼▼▼▼▼▼▼▼▼▼▼▼▼▼▼▼▼▼▼

a. Push the four tabs “a” in the direction shown in the illustration and separate the lower air filter case from air filter case duct.

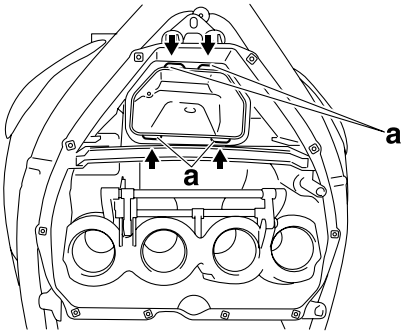

b. Loosen the intake funnel joint bolts.

▲▲▲▲▲▲▲▲▲▲▲▲▲▲▲▲▲▲▲▲▲▲▲▲▲▲▲▲▲▲▲▲▲▲

EAS14B1077

REMOVING THE INTAKE FUNNEL ASSEMBLY

1. Remove:
   - Intake funnel servo motor rod assembly
   - Intake funnel assembly

▼▼▼▼▼▼▼▼▼▼▼▼▼▼▼▼▼▼▼▼▼▼▼▼▼▼▼▼▼▼▼▼▼▼

a. Clamp the two tabs “a” in the direction shown in the illustration and separate the intake funnel assembly from lower air filter case.

ECA14B4004

NOTICE

Do not remove the bolts “1” from the intake funnel joint.

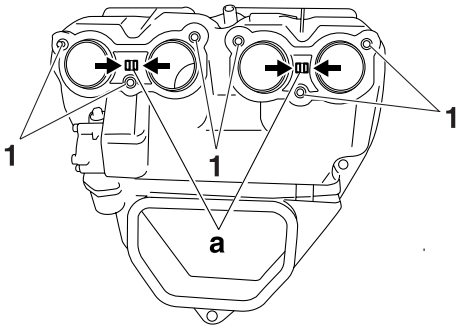

▲▲▲▲▲▲▲▲▲▲▲▲▲▲▲▲▲▲▲▲▲▲▲▲▲▲▲▲▲▲▲▲▲▲

EAS14B1081

CHECKING THE SECONDARY INJECTORS

1. Check:
   - Injectors
     Obstruction → Replace and check the fuel pump/fuel supply system.
     Deposit → Replace.
     Damage → Replace.
2. Check:
   - Injector resistance
     Refer to “CHECKING THE FUEL INJECTORS” on page 8-128.

EAS14B4005

CHECKING THE AIR FILTER CASE SEAL

1. Check:
   - Air filter case seal “1”
     Damage → Replace.

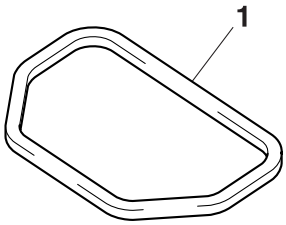

EAS14B1066
CHECKING THE INTAKE FUNNEL

1. Check:
   - Intake funnel servo motor rod assembly
     Damage/scratches → Replace.
   - Intake funnel assembly
     Cracks/damage → Replace.
2. Check:
   - Intake funnel movement
     Sticks → Replace the intake funnel assembly.

ECA14B1026
NOTICE

- **Make sure that the intake funnel smoothly moves to the contacting surface between upper stopper and lower seating position when it is moved by hand.**
- **Make sure that the intake funnel smoothly strokes from the upper position to the seating position by its own weight.**

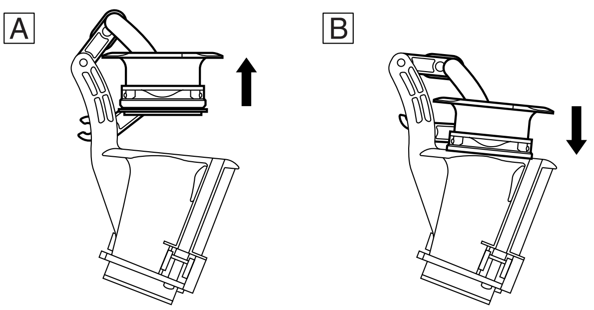

A. Upper
B. Lower

EAS14B1067
INSTALLING THE INTAKE FUNNEL AND LOWER AIR FILTER CASE

1. Install:
   - Lower air filter case
   - Intake funnel servo motor rod assembly
   - Intake funnel assembly
   - Intake funnel joint bolts

Intake funnel joint bolt
8 Nm (0.8 m·kgf, 5.8 ft·lbf)

EAS14B1080
CHECKING THE INTAKE FUNNEL OPERATION

1. Check:
   - Intake funnel servo motor operation

▼▼▼▼▼▼▼▼▼▼▼▼▼▼▼▼▼▼▼▼▼▼▼▼▼▼▼▼▼▼▼▼▼

a. Activate the diagnostic mode and select the diagnostic code number “D:34”.
   Refer to “FUEL INJECTION SYSTEM” on page 8-33.
b. Set the engine stop switch to “○”.
c. Check that the intake funnel operate smoothly strokes from the upper position to the lower seating position.

▲▲▲▲▲▲▲▲▲▲▲▲▲▲▲▲▲▲▲▲▲▲▲▲▲▲▲▲▲▲▲

EAS14B4006
INSTALLING THE SECONDARY INJECTORS

ECA14B4001
NOTICE

- **Always use new O-rings.**
- **When checking the injectors, do not allow any foreign material to enter or adhere to the injectors, fuel rails, or O-rings.**
- **Be careful not to twist or pinch the O-rings when installing the injectors.**
- **If an injector is subject to strong shocks or excessive force, replace it.**
- **If installing the original fuel rails and bolts, remove the white paint marks using a cleaning solvent. Otherwise, paint chips on the bolt seats could prevent the bolts from being tightened to the specified torque.**

1. Install a new seal onto the end of each injector.
2. Install the injectors “1” to the fuel rails “2”.
3. Install the secondary injector joint “3”, making sure to install them in the correct direction.

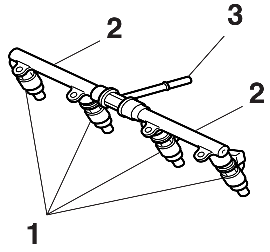

4. Tighten the fuel rail screws “1”.

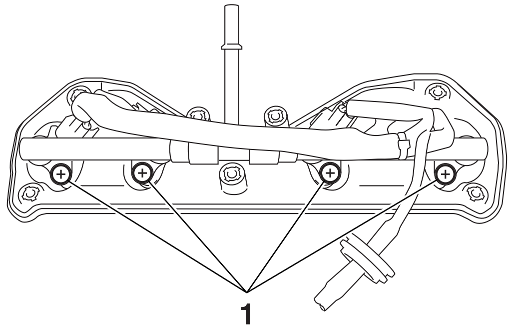

5. Tighten the secondary injector assembly bolts “1”.

Secondary injector assembly bolt
4 Nm (0.4 m·kgf, 2.9 ft·lbf)

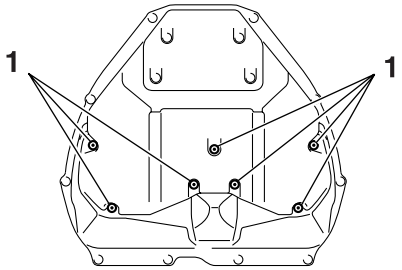

6. Check the injector pressure after the injectors are installed to the upper air filter case. Refer to “CHECKING THE INJECTOR PRESSURE” on page 7-18.

EAS14B1068
INSTALLING THE UPPER AIR FILTER CASE

1. Install:
   - Upper air filter case seal “1” New
   - Secondary injector assembly seal “2” New

TIP
The matching adhesion portion of the seal should be positioned within a range of “a”.

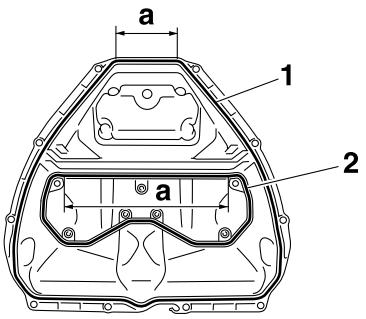

2. Install:
   - Upper air filter case

Upper air filter case screw
2 Nm (0.2 m·kgf, 1.4 ft·lbf)

▼▼▼▼▼▼▼▼▼▼▼▼▼▼▼▼▼▼▼▼▼▼▼▼▼▼▼▼▼▼▼▼▼▼

a. Tighten the upper air filter case bolts “1” as shown.

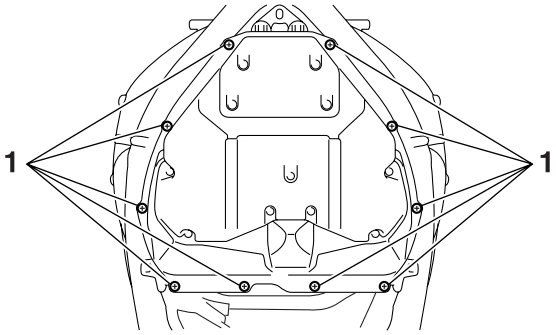

▲▲▲▲▲▲▲▲▲▲▲▲▲▲▲▲▲▲▲▲▲▲▲▲▲▲▲▲▲▲▲▲▲▲

EAS14B1069
INSTALLING THE FUEL HOSE (PRIMARY INJECTOR JOINT SIDE AND SECONDARY INJECTOR JOINT SIDE)

1. Connect:
   - Fuel hose (primary injector joint side and secondary injector joint side)

ECA14B1033
NOTICE
When installing the fuel hose, make sure that it is securely connected, and that the fuel hose connector cover on the fuel hose is in the correct position, otherwise the fuel hose will not be properly installed.

TIP
- Install the fuel hose securely onto the secondary injector joint until a distinct “click” is heard.
- To install the fuel hose onto the secondary injector joint, slide the fuel hose connector cover “1” on the end of the hose in the direction of the arrow shown.

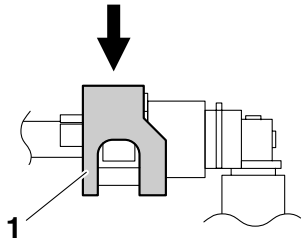

EAS26970

THROTTLE BODIES

Removing the canister

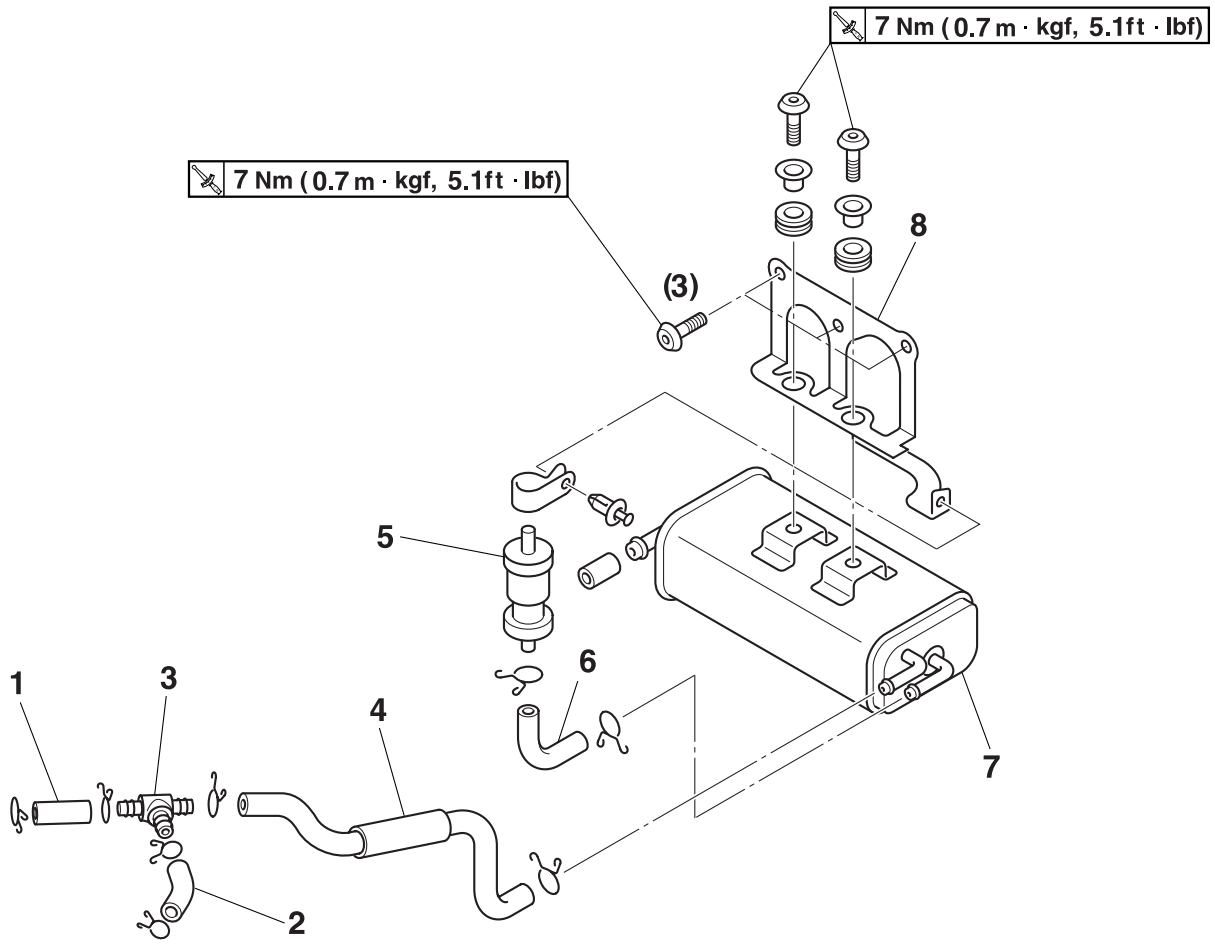

Order	Job/Parts to remove	Q'ty	Remarks
	Fuel tank		Refer to "FUEL TANK" on page 7-1.
	Air filter case		Refer to "AIR FILTER CASE" on page 7-5.
1	Canister purge hose (throttle body-#2 to 3-way joint)	1	
2	Canister purge hose (throttle body-#1 to 3-way joint)	1	
3	3-way joint	1	
4	Canister purge hose (3-way joint to canister)	1	
5	Rollover valve	1	
6	Fuel tank breather hose (rollover valve to canister)	1	
7	Canister	1	
8	Canister bracket	1	
			For installation, reverse the removal procedure.

Removing the throttle body assembly

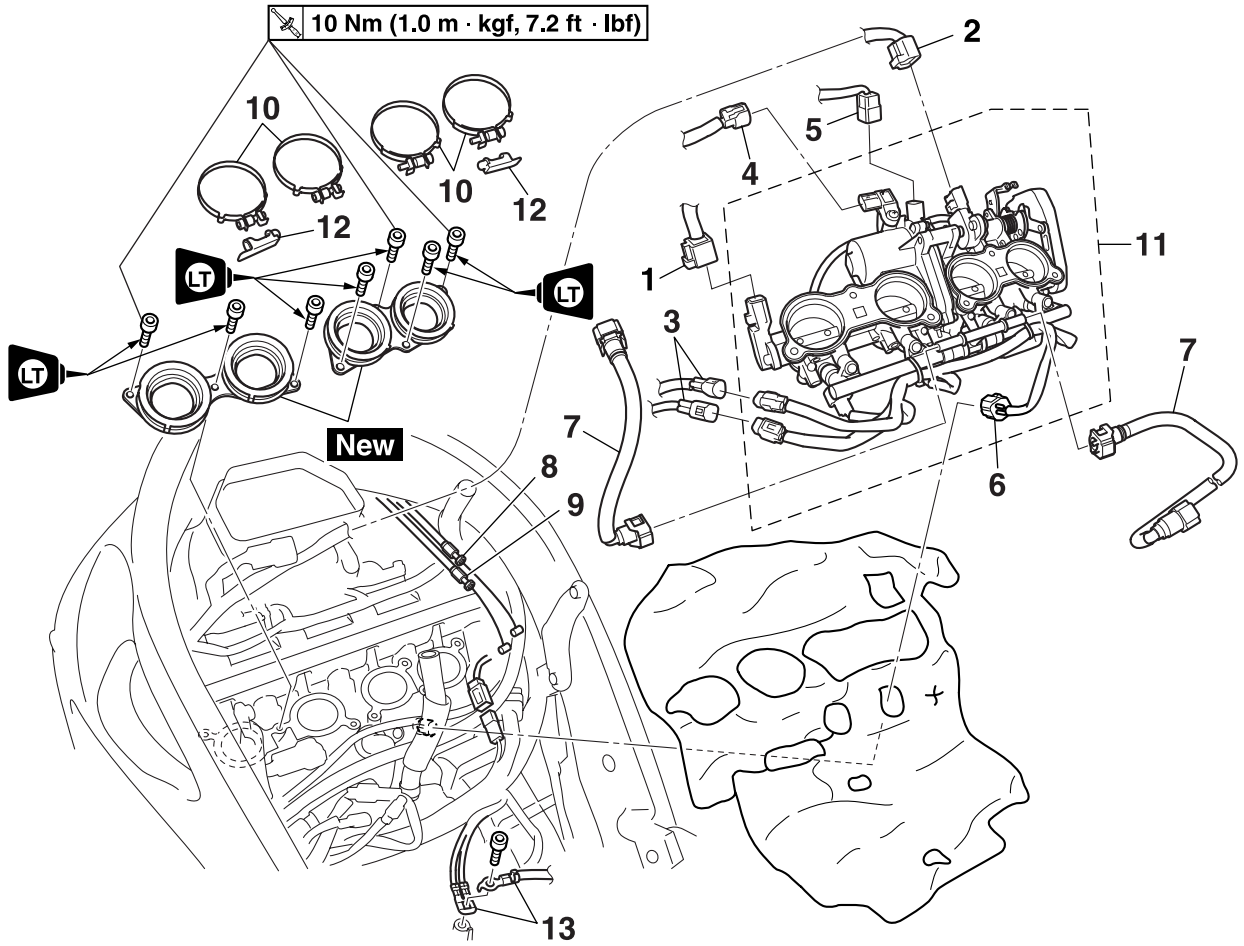

Order	Job/Parts to remove	Q'ty	Remarks
	Fuel tank		Refer to "FUEL TANK" on page 7-1.
	Air filter case		Refer to "AIR FILTER CASE" on page 7-5.
1	Throttle position sensor coupler	1	Disconnect.
2	Accelerator position sensor coupler	1	Disconnect.
3	Sub-wire harness coupler	2	Disconnect.
4	Intake air pressure sensor coupler	1	Disconnect.
5	Throttle servo motor coupler	1	Disconnect.
6	Coolant temperature sensor coupler	1	Disconnect.
7	Fuel hose	2	
8	Throttle cable (accelerator cable)	1	Disconnect.
9	Throttle cable (decelerator cable)	1	Disconnect.
10	Throttle body joint clamp	4	Loosen.
11	Throttle body assembly	1	
12	Throttle body joint clamp cap	2	
13	Engine ground lead	2	Disconnect.

Removing the throttle body assembly

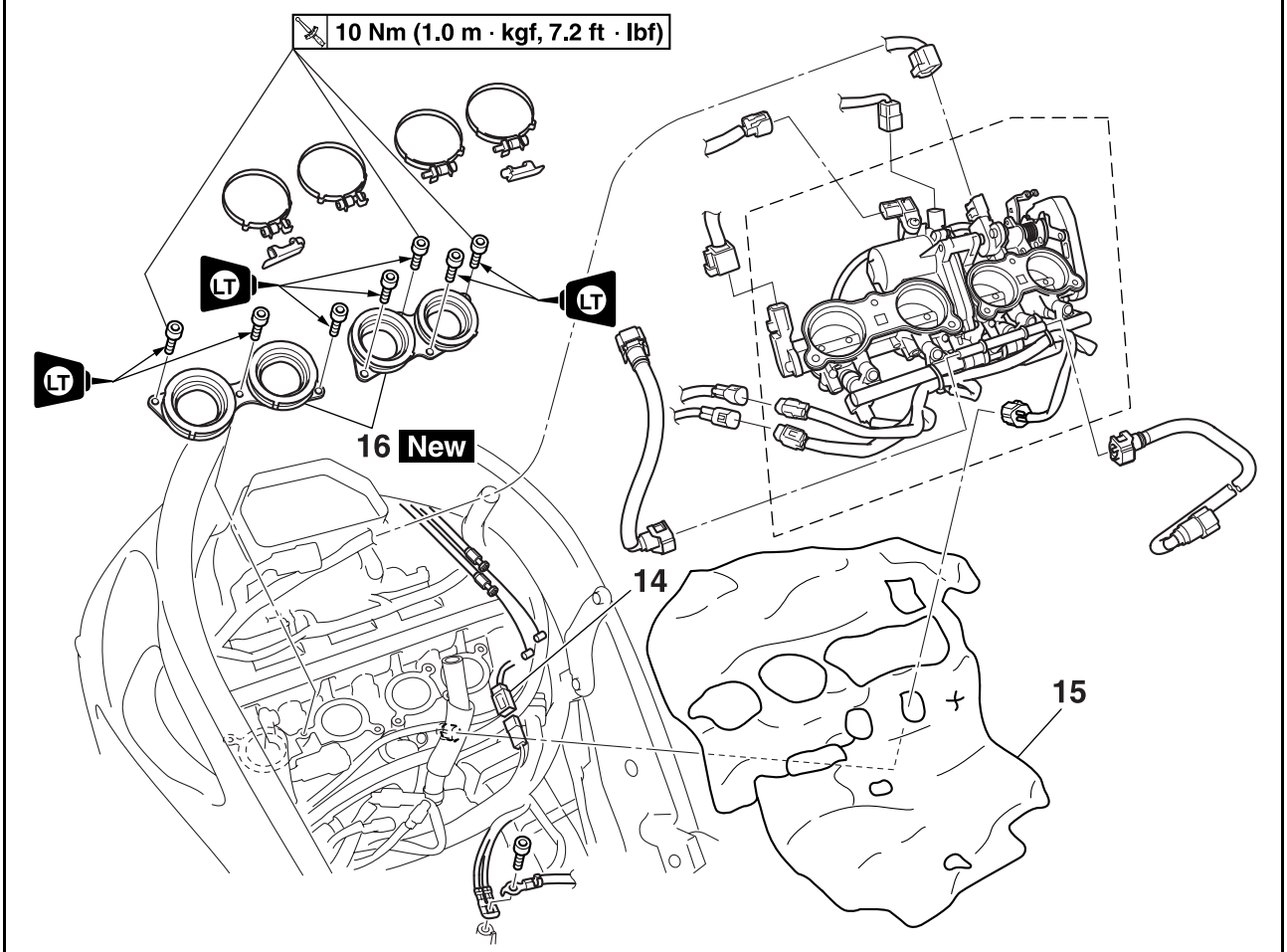

Order	Job/Parts to remove	Q'ty	Remarks
14	Crankshaft position sensor coupler	1	Disconnect.
15	Heat protector	1	
16	Throttle body joint	2	
			For installation, reverse the removal procedure.

Removing the primary injectors

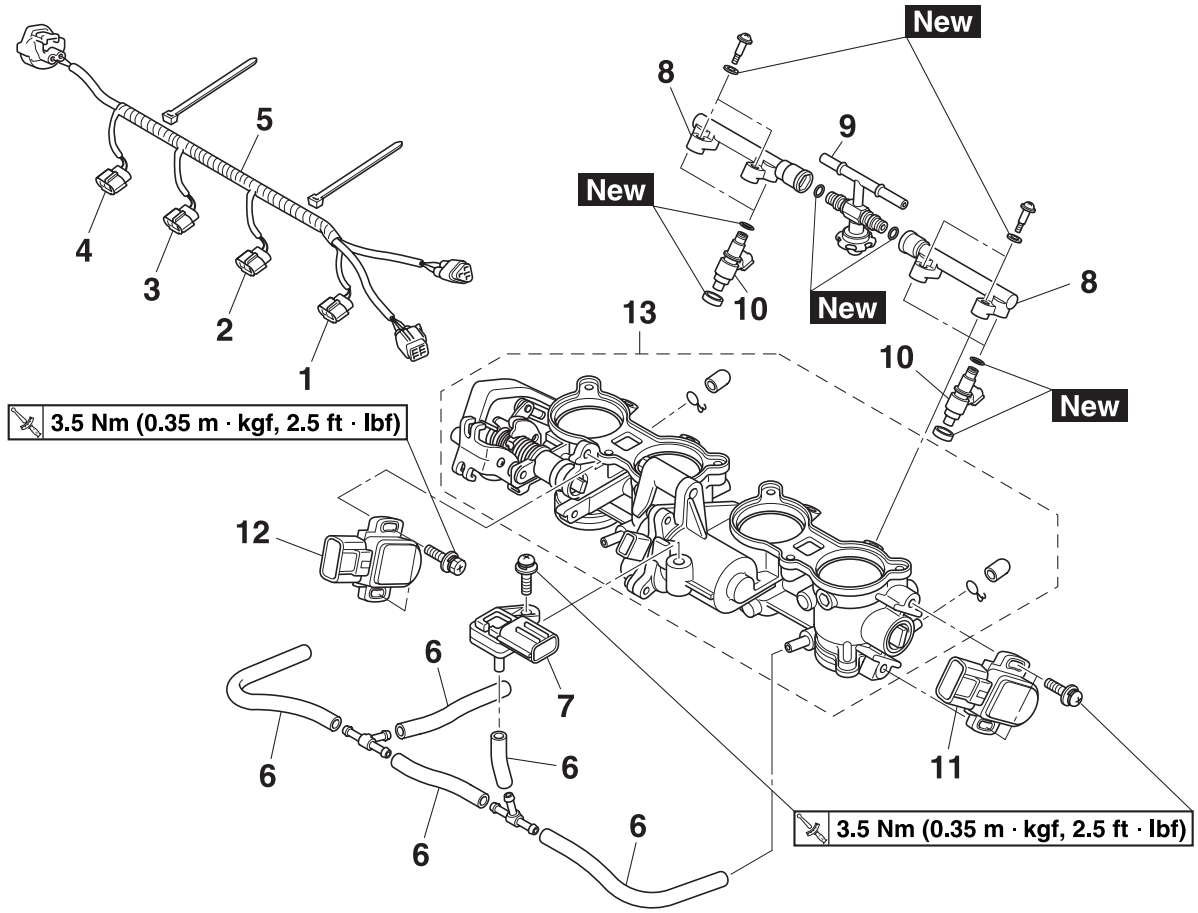

Order	Job/Parts to remove	Q'ty	Remarks
1	Primary injector coupler #1	1	Disconnect.
2	Primary injector coupler #2	1	Disconnect.
3	Primary injector coupler #3	1	Disconnect.
4	Primary injector coupler #4	1	Disconnect.
5	Sub-wire harness	1	
6	Intake air pressure sensor hose	5	
7	Intake air pressure sensor	1	
8	Fuel rail	2	
9	Primary injector joint	1	
10	Primary injector	4	
11	Throttle position sensor	1	
12	Accelerator position sensor	1	
13	Throttle bodies	1	
			For installation, reverse the removal procedure.

EAS14B4007
CHECKING THE PRIMARY INJECTORS (BEFORE REMOVING)

1. Check:
   - Injectors
     Use the diagnostic code number “D:36–D:39”.
     Refer to “DIAGNOSTIC MODE” on page 8-38.

EAS14B4008
REMOVING THE PRIMARY INJECTORS

EWA14B4002
WARNING

- **Check the injectors in a well-ventilated area free of combustible materials. Make sure that there is no smoking or use of electric tools in the vicinity of the injectors.**
- **Be careful when disconnecting the fuel hoses. Any remaining pressure in the fuel hoses may cause the fuel to spray out. Place a container or rag under the hoses to catch any fuel that spills. Always clean up any spilt fuel immediately.**
- **Turn the main switch to “OFF” and disconnect the negative battery lead from the battery terminal before checking the injectors.**

1. Remove:
   - Fuel tank
   - Fuel connector
   - Air filter case
   - Throttle bodies
2. Remove:
   - Sub-wire harness
   - Primary injectors

▼▼▼▼▼▼▼▼▼▼▼▼▼▼▼▼▼▼▼▼▼▼▼▼▼▼▼▼▼▼▼▼▼▼

a. Remove the fuel rail screws “1” as shown.

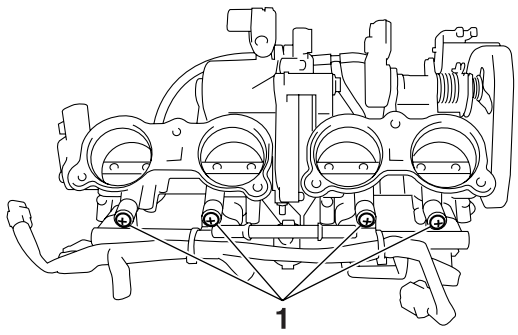

▲▲▲▲▲▲▲▲▲▲▲▲▲▲▲▲▲▲▲▲▲▲▲▲▲▲▲▲▲▲▲▲▲▲

3. Remove:
   - Fuel rails “1”
   - Primary injector joint “2”

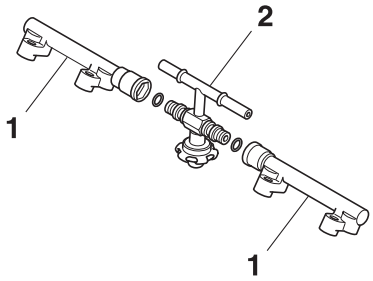

EAS14B4009
CHECKING THE PRIMARY INJECTORS

1. Check:
   - Injectors
     Obstruction → Replace and check the fuel pump/fuel supply system.
     Deposit → Replace.
     Damage → Replace.
2. Check:
   - Injector resistance
     Refer to “CHECKING THE FUEL INJECTORS” on page 8-128.

EAS14B4001
CHECKING THE ROLLOVER VALVE (for California only)

1. Check:
   - Rollover valve “1”
     Damage/faulty → Replace.

TIP

- Check that air flows smoothly only in the direction of the arrow shown in the illustration.
- The rollover valve must be in an upright position when checking the airflow.

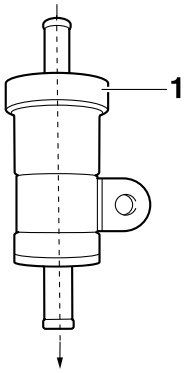

EAS14B1072
CHECKING AND CLEANING THE THROTTLE BODIES

TIP

Clean the throttle bodies only if they cannot be synchronized using the bypass air screws.

Before cleaning the throttle bodies, check the following items:
- Valve clearance
- Spark plugs
- Air filter element
- Throttle body joints
- Fuel hoses
- Air induction system
- Exhaust system
- Breather hoses

EWA14B1021

WARNING

- **If the throttle bodies are subjected to strong shocks or dropped during cleaning, replace them as a set.**
- **Before removing the throttle bodies to clean them, check the operation of the throttle bodies, refer to "FUEL INJECTION SYSTEM" on page 8-33.**

1. Check:
   - Throttle bodies
     Cracks/damage → Replace the throttle bodies as a set.

TIP

If the protector "a" is scratched or damaged, replace the throttle bodies as a set.

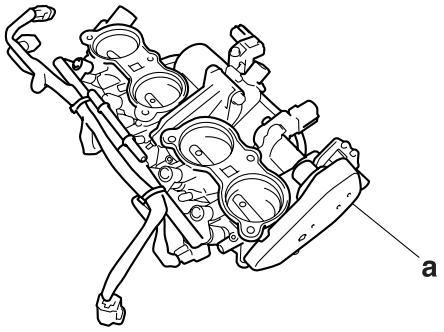

2. Clean:
   - Throttle bodies

ECA14B1027

NOTICE

- **Observe the following precautions; otherwise, the throttle bodies may not operate properly.**
- **Do not open the throttle valves quickly.**
- **Do not subject the throttle bodies to excessive force.**
- **Wash the throttle bodies in a petroleum-based solvent.**
- **Do not use any caustic carburetor cleaning solution.**
- **Do not apply cleaning solvent directly to any plastic parts, sensors, or seals.**
- **Do not directly push the throttle valves to open them.**
- **Do not touch the bypass air screw "a" with a white paint mark; otherwise, the throttle body synchronization will be affected.**

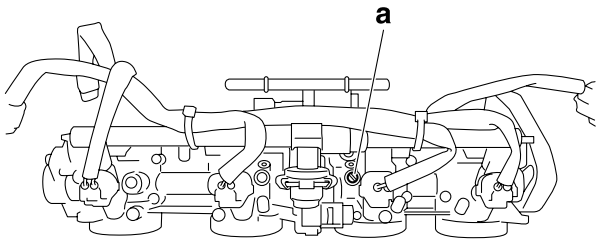

▼▼▼▼▼▼▼▼▼▼▼▼▼▼▼▼▼▼▼▼▼▼▼▼▼▼▼▼▼▼▼▼▼▼

a. Place the throttle bodies on a flat surface with the air filter case side facing up.
b. Install the caps (895-14169-00) onto the hose fittings "a".

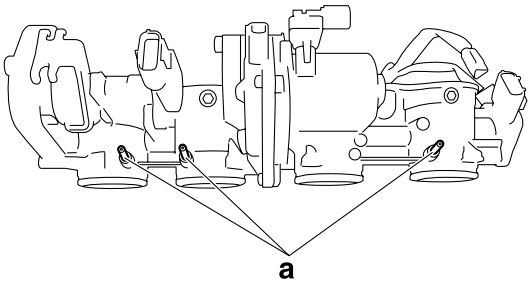

c. Push the lever in the direction shown in the illustration to hold the throttle valves in the open position.

EWA14B1022

WARNING

When cleaning the throttle bodies, be careful not to injure yourself on the throttle valves or other components of the throttle bodies.

ECA14B1028

NOTICE

Do not open the throttle valves by supplying electrical power to the throttle bodies.

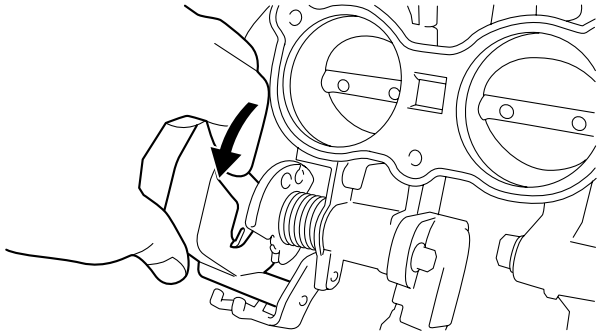

d. Apply a petroleum-based solvent to the throttle valves and the inside of the throttle bodies to remove any carbon deposits.

TIP

- Do not allow any petroleum-based solvent to enter the opening for the injectors.
- Do not apply any petroleum-based solvent to the portions of the throttle valve shafts between the throttle bodies.

e. Remove the carbon deposits from the inside of each throttle body in a downward direction, from the air filter case side of the throttle body to the engine side.

ECA14B1029

NOTICE

- **Do not use a tool, such as a wire brush, to remove the carbon deposits; otherwise, the inside of the throttle bodies may be damaged.**
- **Do not allow carbon deposits or other foreign materials to enter any of the passages in each throttle body or in the space between the throttle valve shaft and the throttle body.**

f. After removing the carbon deposits, clean the inside of the throttle bodies with a petroleum-based solvent, and then dry the throttle bodies using compressed air.

g. Make sure that there are no carbon deposits or other foreign materials in any of the passages “a” in each throttle body or in the space “b” between the throttle valve shaft and the throttle body.

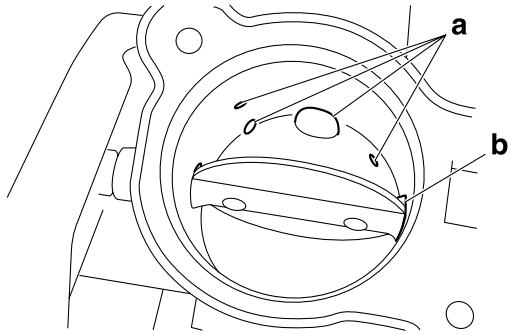

▲▲▲▲▲▲▲▲▲▲▲▲▲▲▲▲▲▲▲▲▲▲▲▲▲▲▲▲▲▲▲▲

3. Adjust:
   - Throttle bodies synchronizing
     Out of specification → Replace the throttle bodies.
     Refer to “SYNCHRONIZING THE THROTTLE BODIES” on page 3-9.

EAS14B4010

INSTALLING THE PRIMARY INJECTORS

ECA14B4002

NOTICE

- **Always use new O-rings.**
- **When checking the injectors, do not allow any foreign material to enter or adhere to the injectors, fuel rails, or O-rings.**
- **Be careful not to twist or pinch the O-rings when installing the injectors.**
- **If an injector is subject to strong shocks or excessive force, replace it.**
- **If installing the original fuel rails and bolts, remove the white paint marks using a cleaning solvent. Otherwise, paint chips on the bolt seats could prevent the bolts from being tightened to the specified torque.**

1. Install a new seal onto the end of each injector.
2. Install the injectors “1” to the fuel rails “2”.
3. Install the primary injector joint “3”, making sure to install them in the correct direction.

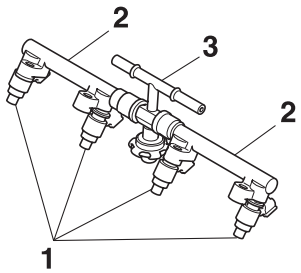

4. Install the injector assemblies to the throttle bodies.

5. Check the injector pressure after the injectors are installed to the throttle bodies. Refer to “CHECKING THE INJECTOR PRESSURE” on page 7-18.

EAS14B4011
CHECKING THE INJECTOR PRESSURE

TIP
- After installing the injectors, perform the following steps to check the injector pressure.
- Do not allow any foreign materials to enter the fuel lines.

1. Check:
   - Injector pressure

▼▼▼▼▼▼▼▼▼▼▼▼▼▼▼▼▼▼▼▼▼▼▼▼▼▼▼▼▼▼▼▼▼▼

a. Connect the injector pressure adapter “1” to the primary injector joint “2”, and then connect an air compressor “3” to the adapter.
b. Connect the pressure gauge “4” to the injector pressure adapter “1”.

Pressure gauge
90890-03153
YU-03153
Fuel injector pressure adapter
90890-03210
YU-03210

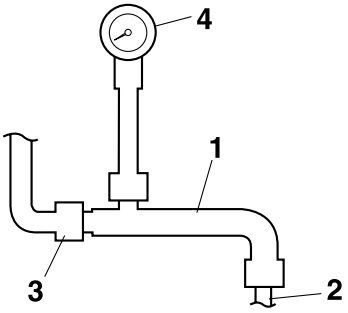

c. Close the valve on the injector pressure adapter.
d. Apply air pressure with the air compressor.
e. Open the valve on the injector pressure adapter until the specified pressure is reached.

Specific air pressure:
490 kPa (5.0 kgf/cm^2, 71.1 psi)

ECA14B4003
NOTICE
Never exceed the specified air pressure or damage could occur.

f. Close the valve on the injector pressure adapter.
g. Check that the specified air pressure is held for about one seconds.
   Pressure drops → Check the pressure gauge and adapter.
   Check the seals and O-rings and then reinstall.
   Replace the fuel injectors.

▲▲▲▲▲▲▲▲▲▲▲▲▲▲▲▲▲▲▲▲▲▲▲▲▲▲▲▲▲▲▲▲▲▲

EAS14B1071
CHECKING THE FUEL PRESSURE

1. Check:
   - Fuel pressure

▼▼▼▼▼▼▼▼▼▼▼▼▼▼▼▼▼▼▼▼▼▼▼▼▼▼▼▼▼▼▼▼▼▼

a. Remove the fuel tank bolt and holdup the fuel tank.
b. Disconnect the fuel hose “1” from the fuel tank.

EWA14B1001
WARNING
Cover fuel hose connections with a cloth when disconnecting them. Residual pressure in the fuel lines could cause fuel to spurt out when removing the hoses.

ECA14B1003
NOTICE
Be sure to disconnect the fuel hose by hand. Do not forcefully disconnect the hose with tools.

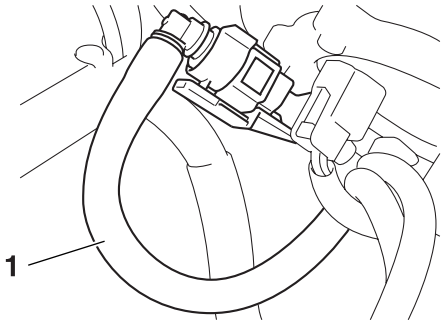

c. Connect the pressure gauge “2” and adapter “3” to the fuel hose “1”.

Pressure gauge
90890-03153
YU-03153
Fuel pressure adapter
90890-03176
YM-03176

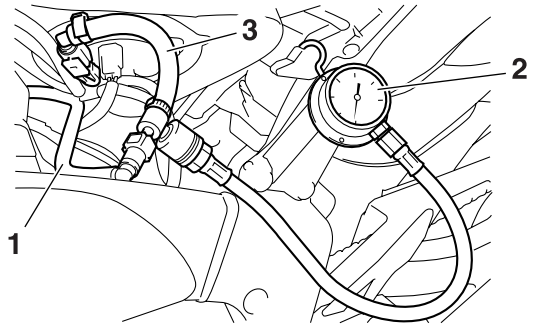

d. Start the engine.
e. Measure the fuel pressure.

Fuel pressure
324.0 kPa (3.24 kgf/cm^2, 47.0 psi)

Faulty → Replace the fuel pump.

▲▲▲▲▲▲▲▲▲▲▲▲▲▲▲▲▲▲▲▲▲▲▲▲▲▲▲▲▲▲

EAS14B1073
ADJUSTING THE THROTTLE POSITION SENSOR

EWA14B1023
WARNING

- **Handle the throttle position sensor with special care.**
- **Never subject the throttle position sensor to strong shocks. If the throttle position sensor is dropped, replace it.**

1. Check:
   - Throttle position sensor
     Refer to “CHECKING THE THROTTLE POSITION SENSOR” on page 8-122.
2. Adjust:
   - Throttle position sensor angle

▼▼▼▼▼▼▼▼▼▼▼▼▼▼▼▼▼▼▼▼▼▼▼▼▼▼▼▼▼▼

a. Temporary tighten the throttle position sensor.
b. Check that the throttle valves are fully closed.
c. Connect the throttle position sensor, accelerator position sensor and throttle servo motor to the wire harness.
d. Turn the main switch to “OFF”.
e. Simultaneously press and hold the “SELECT” and “RESET” buttons, turn the main switch to “ON”, and continue to press the buttons for 8 seconds more.

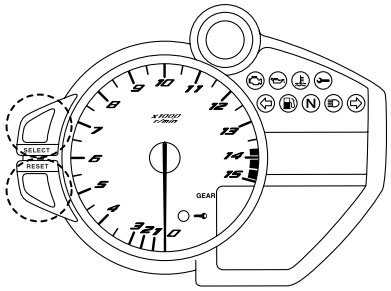

TIP
“dIAG” appears on the odometer LCD.

f. Diagnostic code number “D:01” is selected.
g. Adjust the position of the throttle position sensor angle so that 12–21 can appear in the meter.
h. After adjusting the throttle position sensor angle, tighten the throttle position sensor screws “1”.

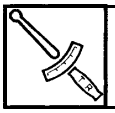

Throttle position sensor screw
3.5 Nm (0.35 m·kgf, 2.5 ft·lbf)

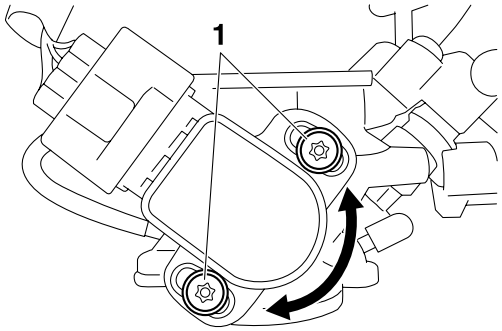

▲▲▲▲▲▲▲▲▲▲▲▲▲▲▲▲▲▲▲▲▲▲▲▲▲▲▲▲▲▲

EAS14B1074
ADJUSTING THE ACCELERATOR POSITION SENSOR

EWA14B1024
WARNING

- **Handle the accelerator position sensor with special care.**
- **Never subject the accelerator position sensor to strong shocks. If the accelerator position sensor is dropped, replace it.**

1. Check:
   - Accelerator position sensor
     Refer to “CHECKING THE ACCELERATOR POSITION SENSOR” on page 8-123.
2. Adjust:
   - Accelerator position sensor angle

▼▼▼▼▼▼▼▼▼▼▼▼▼▼▼▼▼▼▼▼▼▼▼▼▼▼▼▼▼▼▼▼▼▼

a. Temporary tighten the accelerator position sensor.
b. Check that the throttle valves are fully closed.
c. Connect the throttle position sensor, accelerator position sensor and throttle servo motor to the wire harness.
d. Turn the main switch to “OFF”.
e. Simultaneously press and hold the “SELECT” and “RESET” buttons, turn the main switch to “ON”, and continue to press the buttons for 8 seconds more.

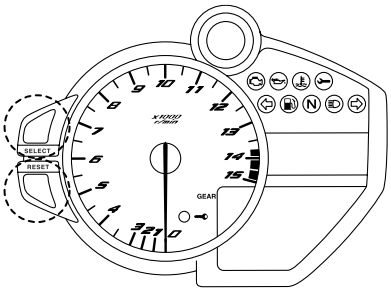

TIP

“dIAG” appears on the odometer LCD.

f. Diagnostic code number “D:14” is selected.
g. Adjust the position of the accelerator position sensor angle so that 12–22 can appear in the meter.
h. After adjusting the accelerator position sensor angle, tighten the accelerator position sensor screws “1”.

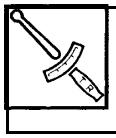

Accelerator position sensor screw
3.5 Nm (0.35 m·kgf, 2.5 ft·lbf)

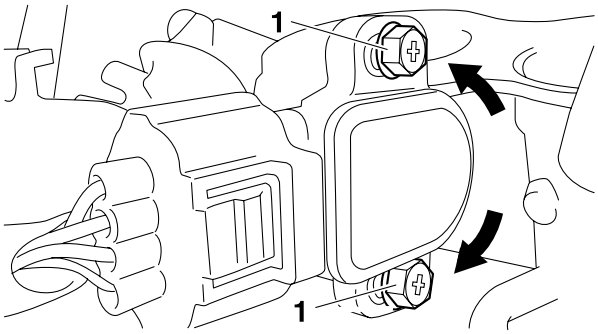

▲▲▲▲▲▲▲▲▲▲▲▲▲▲▲▲▲▲▲▲▲▲▲▲▲▲▲▲▲▲▲▲▲▲

EAS27040

AIR INDUCTION SYSTEM

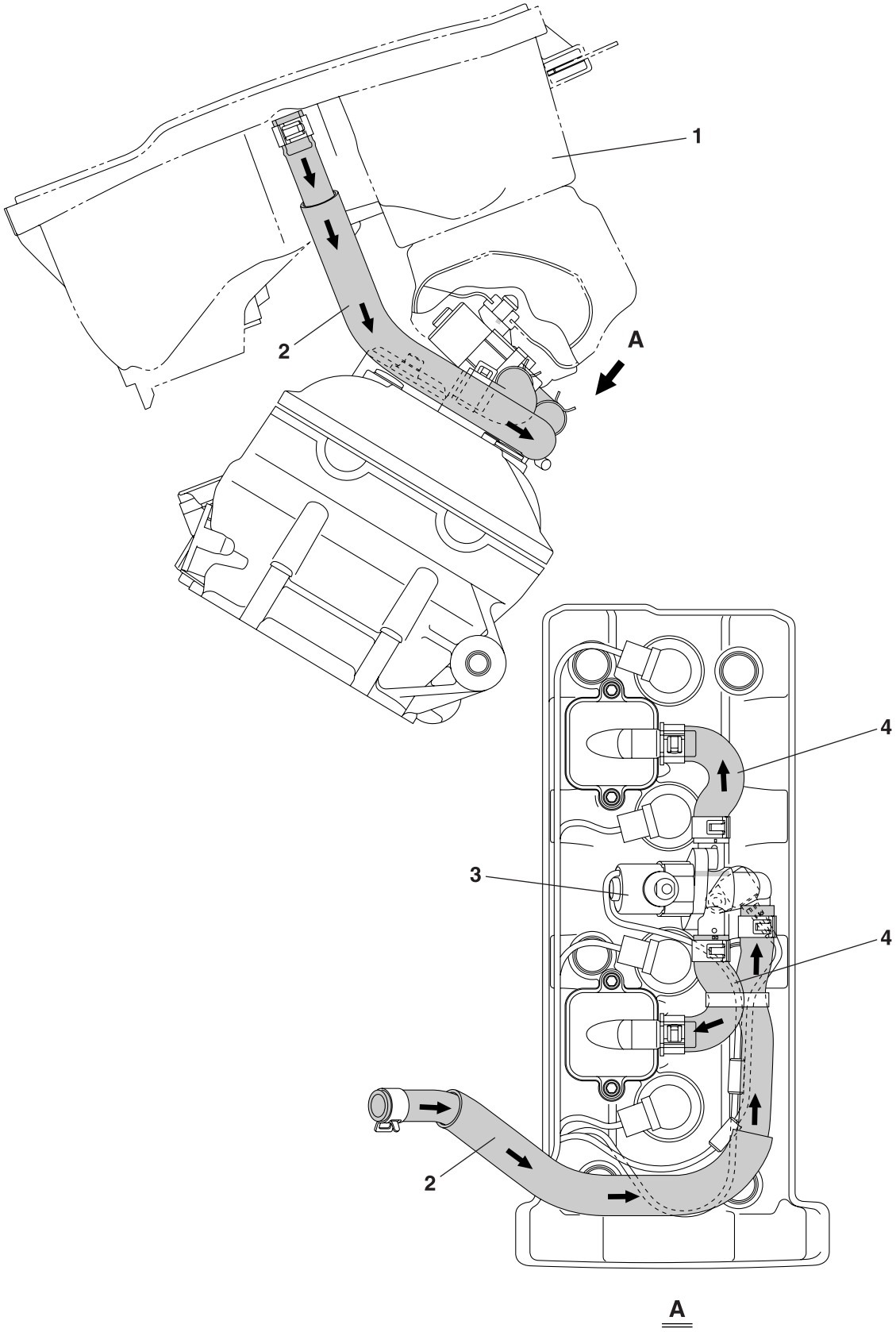

1. Lower air filter case
2. Air induction system hose (air filter case to air cut-off valve)
3. Air cut-off valve
4. Air induction system hose (air cut-off valve to reed valve cover)

Removing the air cut-off valve assembly and hoses

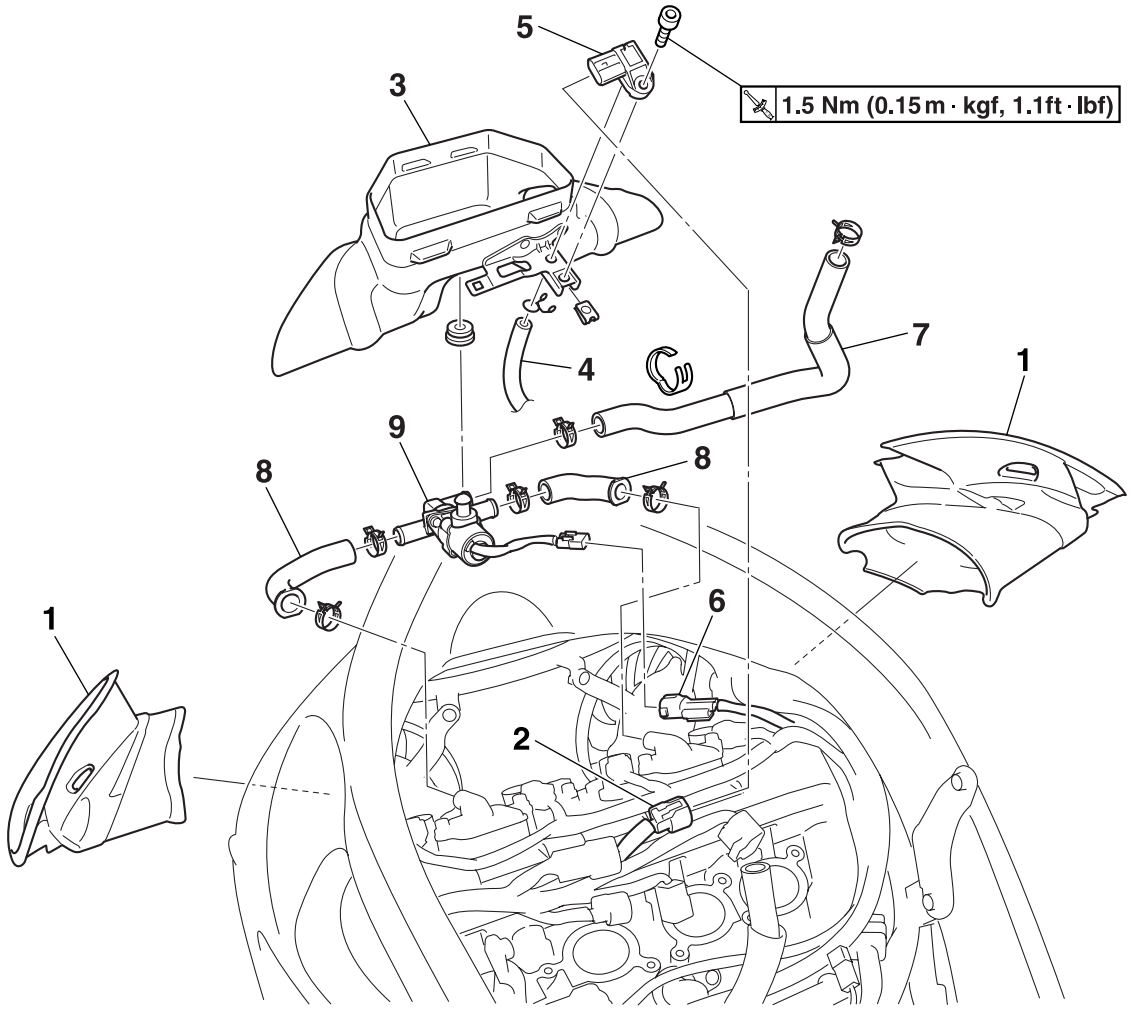

Order	Job/Parts to remove	Q'ty	Remarks
	Fuel tank		Refer to "FUEL TANK" on page 7-1.
	Air filter case		Refer to "AIR FILTER CASE" on page 7-5.
1	Side air filter case duct	2	
2	Atmospheric pressure sensor coupler	1	Disconnect.
3	Air filter case duct	1	
4	Atmospheric pressure sensor hose	1	Disconnect.
5	Atmospheric pressure sensor	1	
6	Air induction system solenoid coupler	1	Disconnect.
7	Air induction system hose (air filter case to air cut-off valve)	1	
8	Air induction system hose (air cut-off valve to reed valve cover)	2	
9	Air cut-off valve	1	
			For installation, reverse the removal procedure.

Removing the reed valves

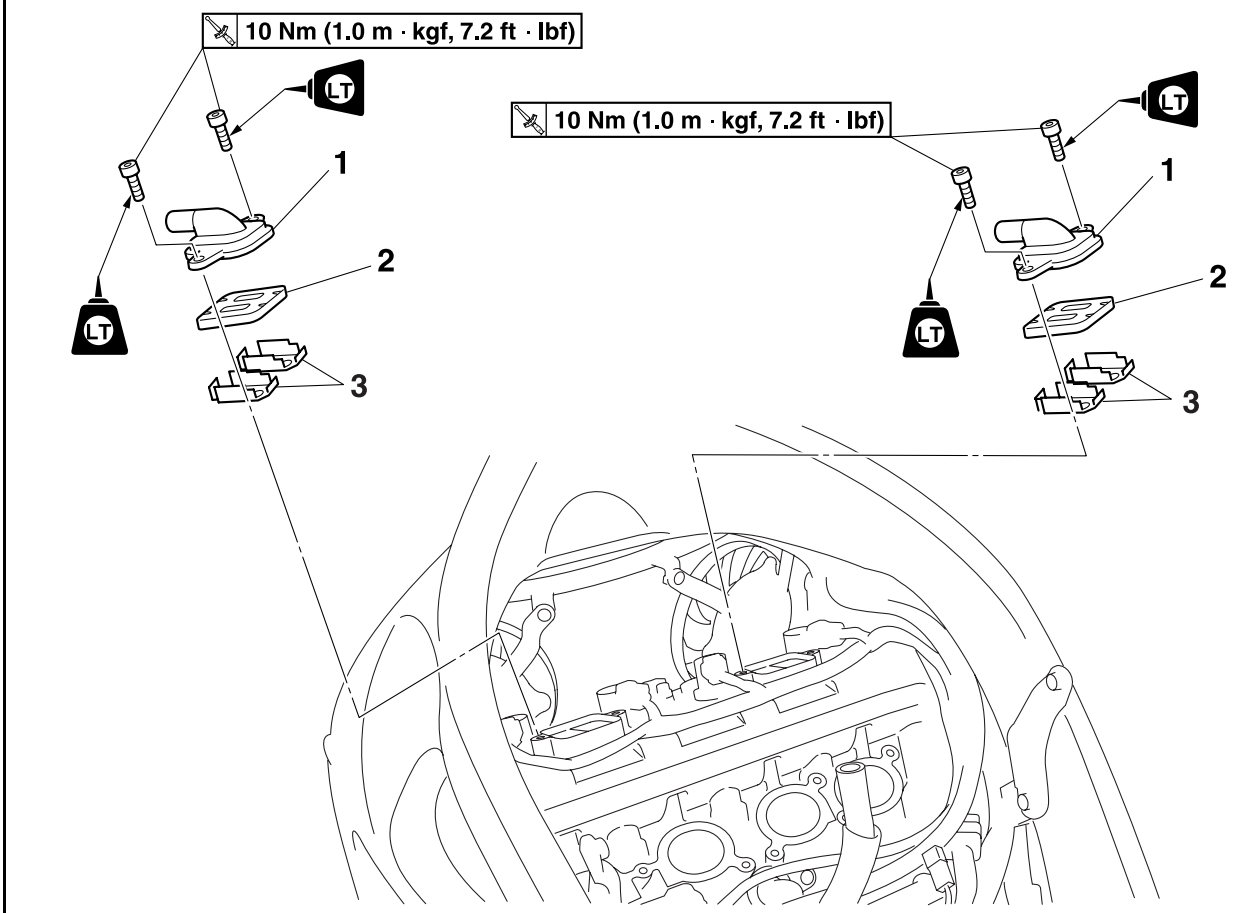

Order	Job/Parts to remove	Q'ty	Remarks
1	Reed valve cover	2	
2	Reed valve assembly	2	
3	Reed valve plate	4	
			For installation, reverse the removal procedure.

EAS27060
CHECKING THE AIR INDUCTION SYSTEM

Air injection
The air induction system burns unburned exhaust gases by injecting fresh air (secondary air) into the exhaust port, reducing the emission of hydrocarbons. When there is negative pressure at the exhaust port, the reed valve opens, allowing secondary air to flow into the exhaust port. The required temperature for burning the unburned exhaust gases is approximately 600 to 700 °C (1112 to 1292 °F).

Air cut-off valve
The air cut-off valve is controlled by the signals from the ECU in accordance with the combustion conditions. Ordinarily, the air cut-off valve opens to allow the air to flow during idle and closes to cut-off the flow when the vehicle is being driven. However, if the coolant temperature is below the specified value, the air cut-off valve remains open and allows the air to flow into the exhaust pipe until the temperature becomes higher than the specified value.

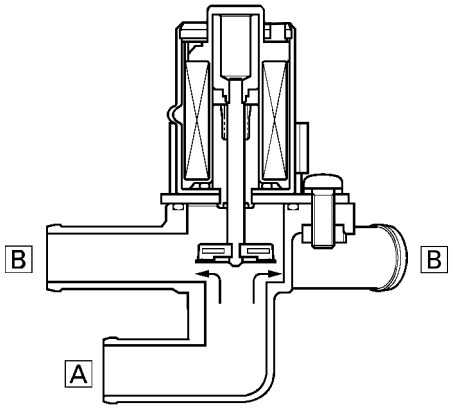

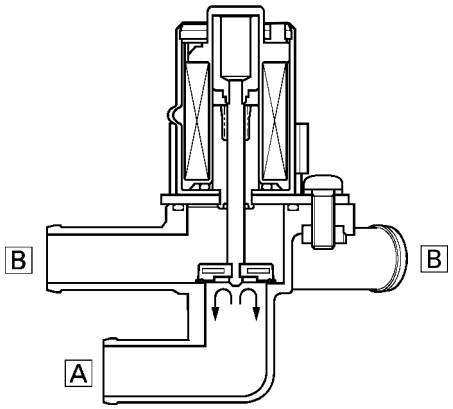

A. From the air filter case
B. To the cylinder head

1. Check:
   - Hoses
     Loose connections → Connect properly.
     Cracks/damage → Replace.
2. Check:
   - Reed valve
   - Reed valve stopper
   - Reed valve base
     Cracks/damage → Replace the reed valve assembly.
3. Measure:
   - Reed valve bending limit “a”
     Out of specification → Replace the reed valve.

	Reed valve bending limit **0.4 mm (0.016 in)**

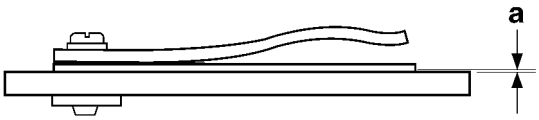

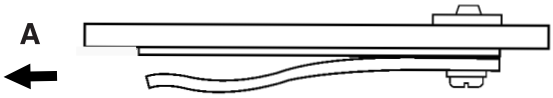

4. Check:
   - Air cut-off valve
     Cracks/damage → Replace.
5. Check:
   - Air induction system solenoid
     Refer to “CHECKING THE AIR INDUCTION SYSTEM SOLENOID” on page 8-124.

EAS27070

INSTALLING THE AIR INDUCTION SYSTEM

1. Install:
   - Reed valves
   - Reed valve stoppers
   - Reed valve base
2. Install:
   - Reed valve plate

TIP

Align the projection “a” on the cylinder head cover “1” with the hole “b” in the reed valve plate.

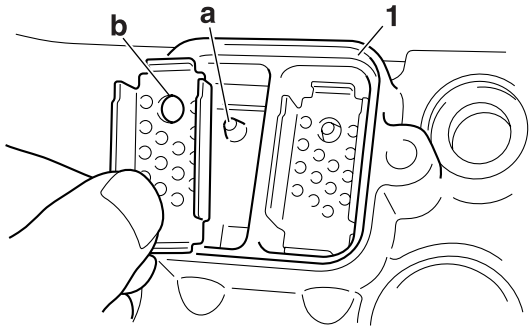

   - Reed valve assembly

TIP

Install the reed valve assembly so that the open side turns to the exhaust side of the engine.

A. Exhaust side

3. Install:
   - Reed valve cover

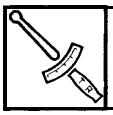

Reed valve cover bolt
10 Nm (1.0 m·kgf, 7.2 ft·lbf)

ELECTRICAL SYSTEM

EAS27090
IGNITION SYSTEM

EAS27110
CIRCUIT DIAGRAM

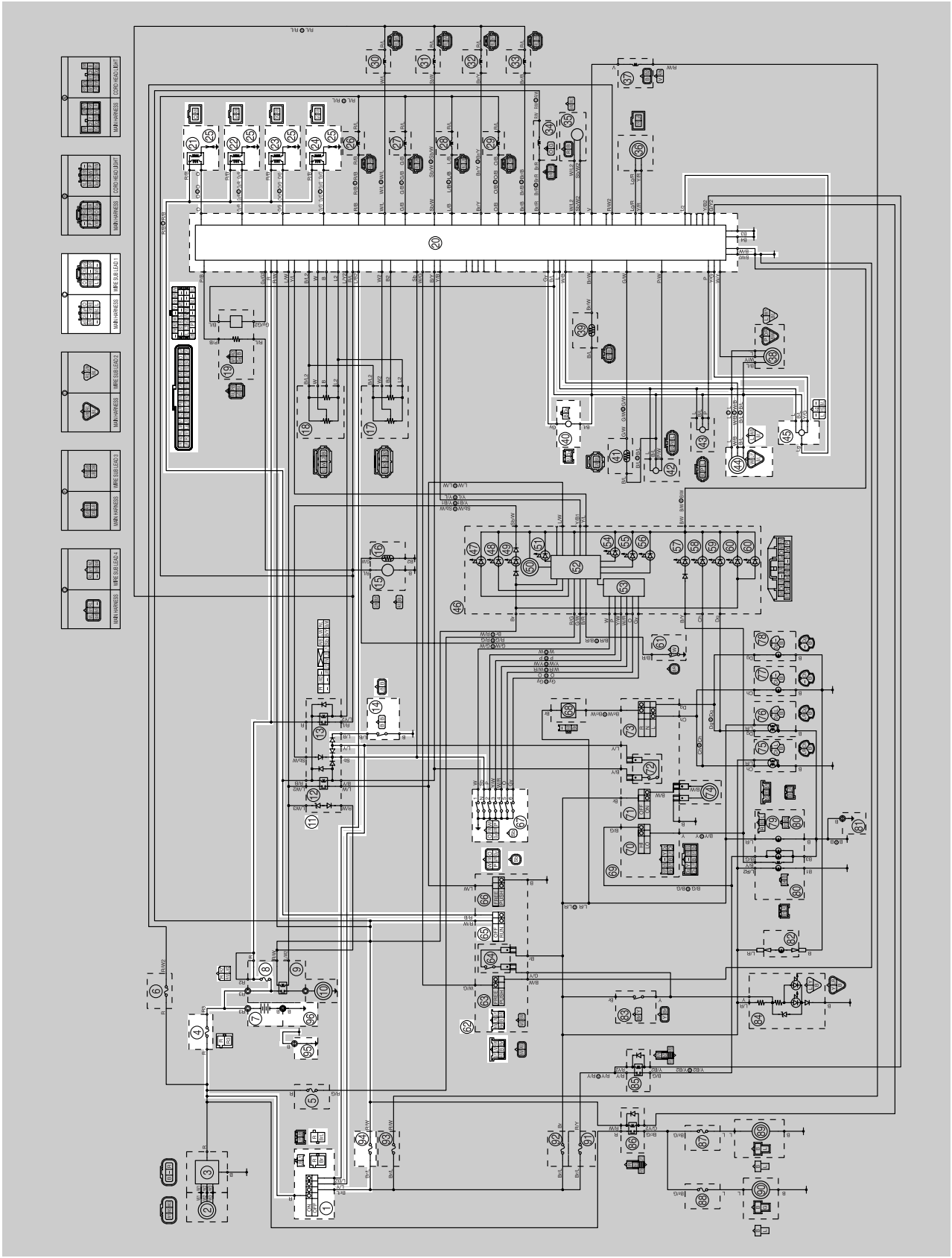

1. Main switch
4. Main fuse
7. Battery
8. Fuel injection system fuse
11. Relay unit
14. Sidestand switch
20. ECU (engine control unit)
21. Ignition coil #1
22. Ignition coil #2
23. Ignition coil #3
24. Ignition coil #4
25. Spark plug
40. Crankshaft position sensor
44. Cylinder identification sensor
45. Lean angle sensor
62. Right handlebar switch
65. Engine stop switch
67. Gear position sensor
94. Ignition fuse
95. Engine ground
96. Battery negative lead

EAS14B1082

ENGINE STOPPING DUE TO SIDESTAND OPERATION

When the engine is running and the transmission is in gear, the engine will stop if the sidestand is moved down. This is because the electric current from the ignition coils does not flow to the ECU when both the neutral switch and sidestand switch are set to “OFF”, thereby preventing the spark plugs from producing a spark. However, the engine continues to run under the following conditions:

- The transmission is in gear (the neutral switch circuit is open) and the sidestand is up (the sidestand switch circuit is closed).
- The transmission is in neutral (the neutral switch circuit is closed) and the sidestand is down (the sidestand switch circuit is open).

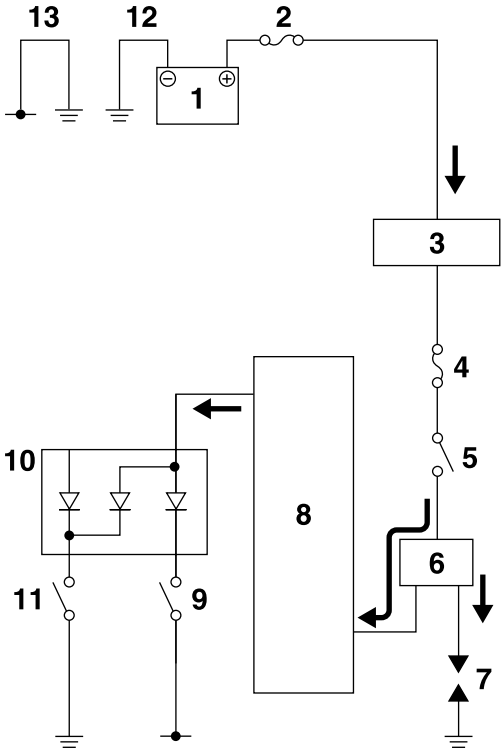

1. Battery
2. Main fuse
3. Main switch
4. Ignition fuse
5. Engine stop switch
6. Ignition coil
7. Spark plug
8. ECU (engine control unit)
9. Sidestand switch
10. Relay unit (diode)
11. Gear position sensor
12. Battery negative lead
13. Engine ground

EAS27150

TROUBLESHOOTING

The ignition system fails to operate (no spark or intermittent spark).

TIP

- Before troubleshooting, remove the following part(s):

1. Rider seat
2. Passenger seat
3. Air filter case duct
4. Side cowlings

1. Check the fuses. (Main, ignition and fuel injection system) Refer to “CHECKING THE FUSES” on page 8-109.	NG→	Replace the fuse(s).
OK↓		
2. Check the battery. Refer to “CHECKING AND CHARGING THE BATTERY” on page 8-109.	NG→	• Clean the battery terminals. • Recharge or replace the battery.
OK↓		
3. Check the spark plugs. Refer to “CHECKING THE SPARK PLUGS” on page 3-4.	NG→	Re-gap or replace the spark plugs.
OK↓		
4. Check the ignition spark gap. Refer to “CHECKING THE IGNITION COILS” on page 8-116.	NG→	Ignition system is OK.
OK↓		
5. Check the ignition coils. Refer to “CHECKING THE IGNITION COILS” on page 8-116.	NG→	Replace the ignition coils.
OK↓		
6. Check the crankshaft position sensor. Refer to “CHECKING THE CRANKSHAFT POSITION SENSOR” on page 8-117.	NG→	Replace the crankshaft position sensor.
OK↓		

7. Check the cylinder identification sensor. Refer to “CHECKING THE CYLINDER IDENTIFICATION SENSOR” on page 8-125.	NG→	Replace the cylinder identification sensor.
OK↓		
8. Check the main switch. Refer to “CHECKING THE SWITCHES” on page 8-105.	NG→	Replace the main switch.
OK↓		
9. Check the engine stop switch. Refer to “CHECKING THE SWITCHES” on page 8-105.	NG→	Replace the right handlebar switch.
OK↓		
10. Check the gear position sensor. Refer to “CHECKING THE GEAR POSITION SENSOR” on page 8-127.	NG→	Replace the gear position sensor.
OK↓		
11. Check the sidestand switch. Refer to “CHECKING THE SWITCHES” on page 8-105.	NG→	Replace the sidestand switch.
OK↓		
12. Check the relay unit (diode). Refer to “CHECKING THE RELAY UNIT (DIODE)” on page 8-115	NG→	Replace the relay unit.
OK↓		
13. Check the lean angle sensor. Refer to “CHECKING THE LEAN ANGLE SENSOR” on page 8-117.	NG→	Replace the lean angle sensor.
OK↓		
14. Check the entire ignition system’s wiring. Refer to “CIRCUIT DIAGRAM” on page 8-1.	NG→	Properly connect or repair the ignition system’s wiring
OK↓		
Replace the ECU.		

EAS27160
ELECTRIC STARTING SYSTEM

EAS27170
CIRCUIT DIAGRAM

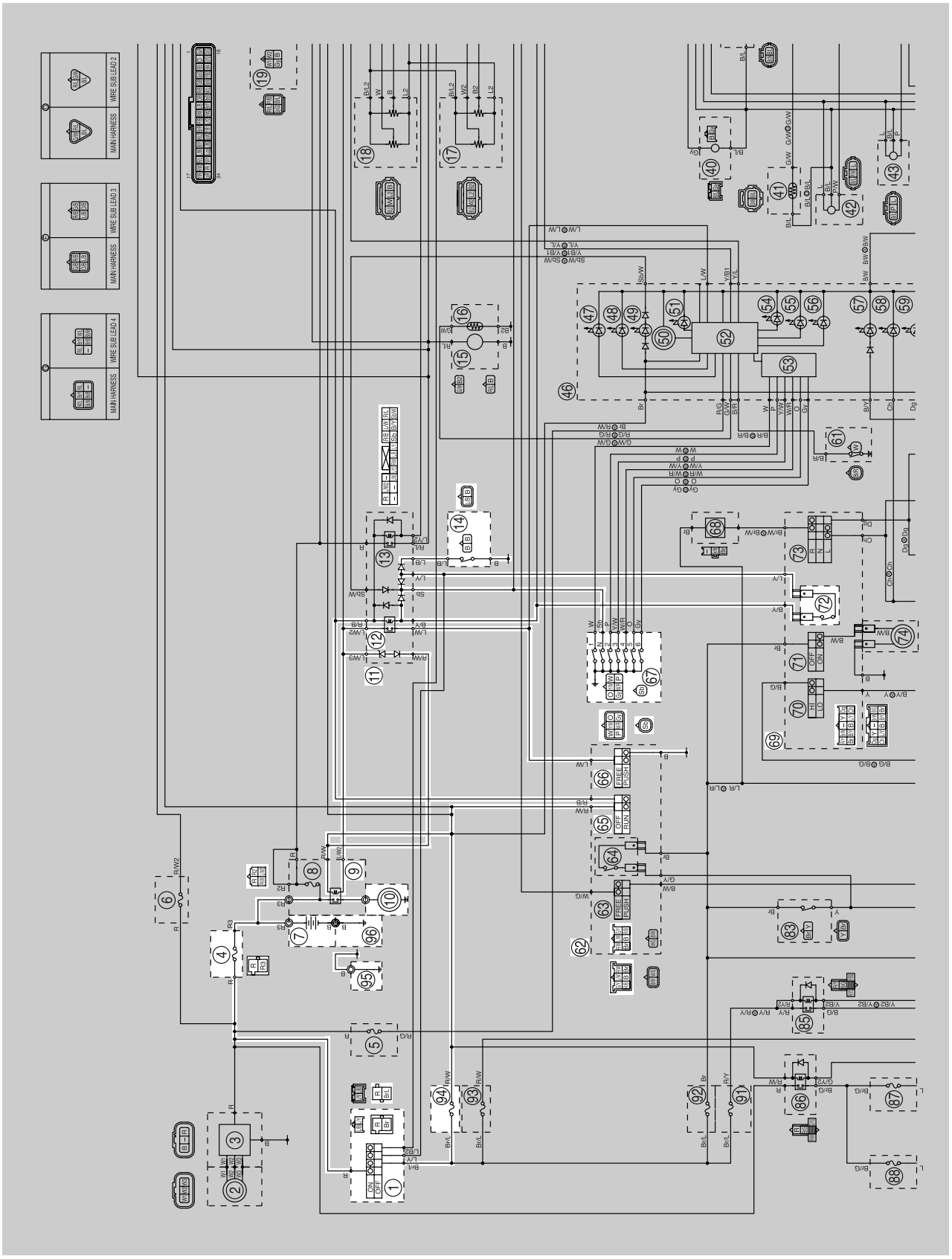

1. Main switch
4. Main fuse
7. Battery
9. Starter relay
10. Starter motor
11. Relay unit
12. Starting circuit cut-off relay
14. Sidestand switch
62. Right handlebar switch
65. Engine stop switch
66. Start switch
67. Gear position sensor
69. Left handlebar switch
72. Clutch switch
94. Ignition fuse
95. Engine ground
96. Battery negative lead

EAS14B1036

STARTING CIRCUIT CUT-OFF SYSTEM OPERATION

If the engine stop switch is set to "◯" and the main switch is set to "ON" (both switches are closed), the starter motor can only operate if at least one of the following conditions is met:

- The transmission is in neutral (the gear position sensor is neutral position).
- The clutch lever is pulled to the handlebar (the clutch switch is closed) and the sidestand is up (the sidestand switch is closed).

The starting circuit cut-off relay prevents the starter motor from operating when neither of these conditions has been met. In this instance, the starting circuit cut-off relay is open so current cannot reach the starter motor. When at least one of the above conditions has been met the starting circuit cut-off relay is closed and the engine can be started by pressing the starter switch.

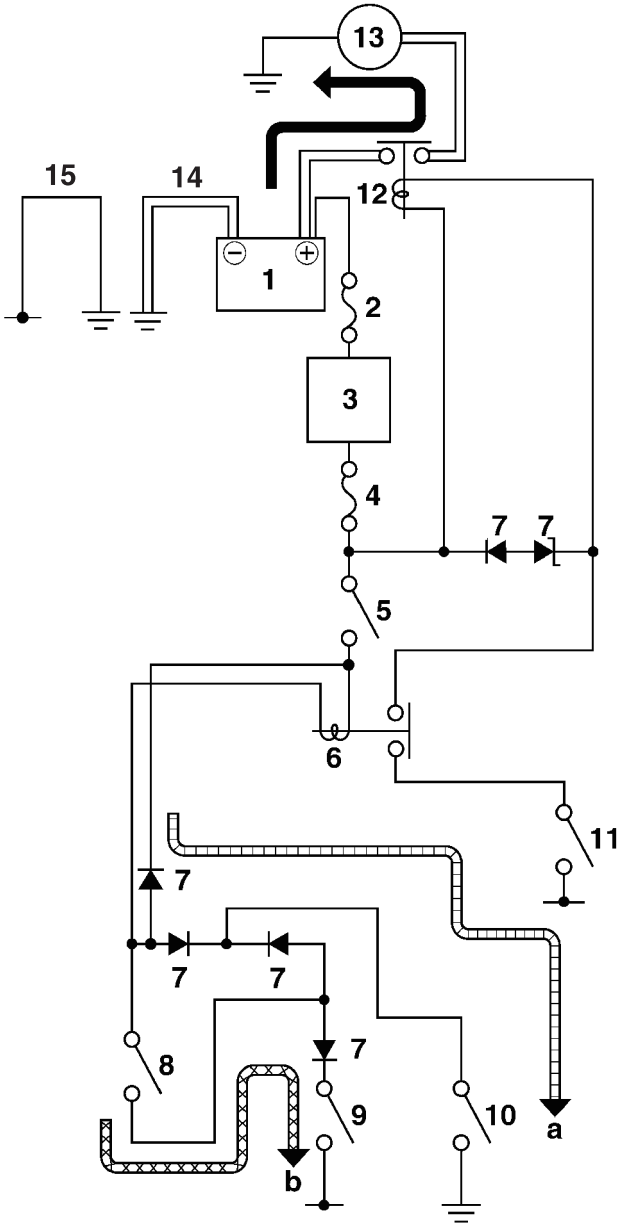

a. WHEN THE TRANSMISSION IS IN NEUTRAL
b. WHEN THE SIDESTAND IS UP AND THE CLUTCH LEVER IS PULLED TO THE HANDLEBAR

1. Battery
2. Main fuse
3. Main switch
4. Ignition fuse
5. Engine stop switch
6. Relay unit (starting circuit cut-off relay)
7. Relay unit (diode)
8. Clutch switch
9. Sidestand switch
10. Gear position sensor
11. Start switch
12. Starter relay
13. Starter motor
14. Battery negative lead
15. Engine ground

EAS27190

TROUBLESHOOTING

The starter motor fails to turn.

TIP

- Before troubleshooting, remove the following part(s):

1. Rider seat
2. Passenger seat
3. Heat protector
4. Side cowlings

1. Check the fuses. (Main and ignition) Refer to “CHECKING THE FUSES” on page 8-109.	NG→	Replace the fuse(s).
OK↓		
2. Check the battery. Refer to “CHECKING AND CHARGING THE BATTERY” on page 8-109.	NG→	• Clean the battery terminals. • Recharge or replace the battery.
OK↓		
3. Check the starter motor operation. Refer to “CHECKING THE STARTER MOTOR OPERATION” on page 8-118.	OK→	Starter motor is OK. Perform the electric starting system troubleshooting, starting with step 5.
NG↓		
4. Check the starter motor. Refer to “CHECKING THE STARTER MOTOR” on page 5-48.	NG→	Repair or replace the starter motor.
OK↓		
5. Check the relay unit (starting circuit cut-off relay). Refer to “CHECKING THE RELAYS” on page 8-113.	NG→	Replace the relay unit.
OK↓		
6. Check the relay unit (diode). Refer to “CHECKING THE RELAY UNIT (DIODE)” on page 8-115.	NG→	Replace the relay unit.
OK↓		
7. Check the starter relay. Refer to “CHECKING THE RELAYS” on page 8-113.	NG→	Replace the starter relay.
OK↓		

8. Check the main switch. Refer to “CHECKING THE SWITCHES” on page 8-105.	NG→	Replace the main switch.
OK↓		
9. Check the engine stop switch. Refer to “CHECKING THE SWITCHES” on page 8-105.	NG→	Replace the right handlebar switch.
OK↓		
10. Check the gear position sensor. Refer to “CHECKING THE GEAR POSITION SENSOR” on page 8-127.	NG→	Replace the gear position sensor.
OK↓		
11. Check the sidestand switch. Refer to “CHECKING THE SWITCHES” on page 8-105.	NG→	Replace the sidestand switch.
OK↓		
12. Check the clutch switch. Refer to “CHECKING THE SWITCHES” on page 8-105.	NG→	Replace the clutch switch.
OK↓		
13. Check the start switch. Refer to “CHECKING THE SWITCHES” on page 8-105.	NG→	Replace the right handlebar switch.
OK↓		
14. Check the entire starting system’s wiring. Refer to “CIRCUIT DIAGRAM” on page 8-7.	NG→	Properly connect or repair the starting system’s wiring
OK↓		
The starting system circuit is OK.		

EAS27200
CHARGING SYSTEM

EAS27210
CIRCUIT DIAGRAM

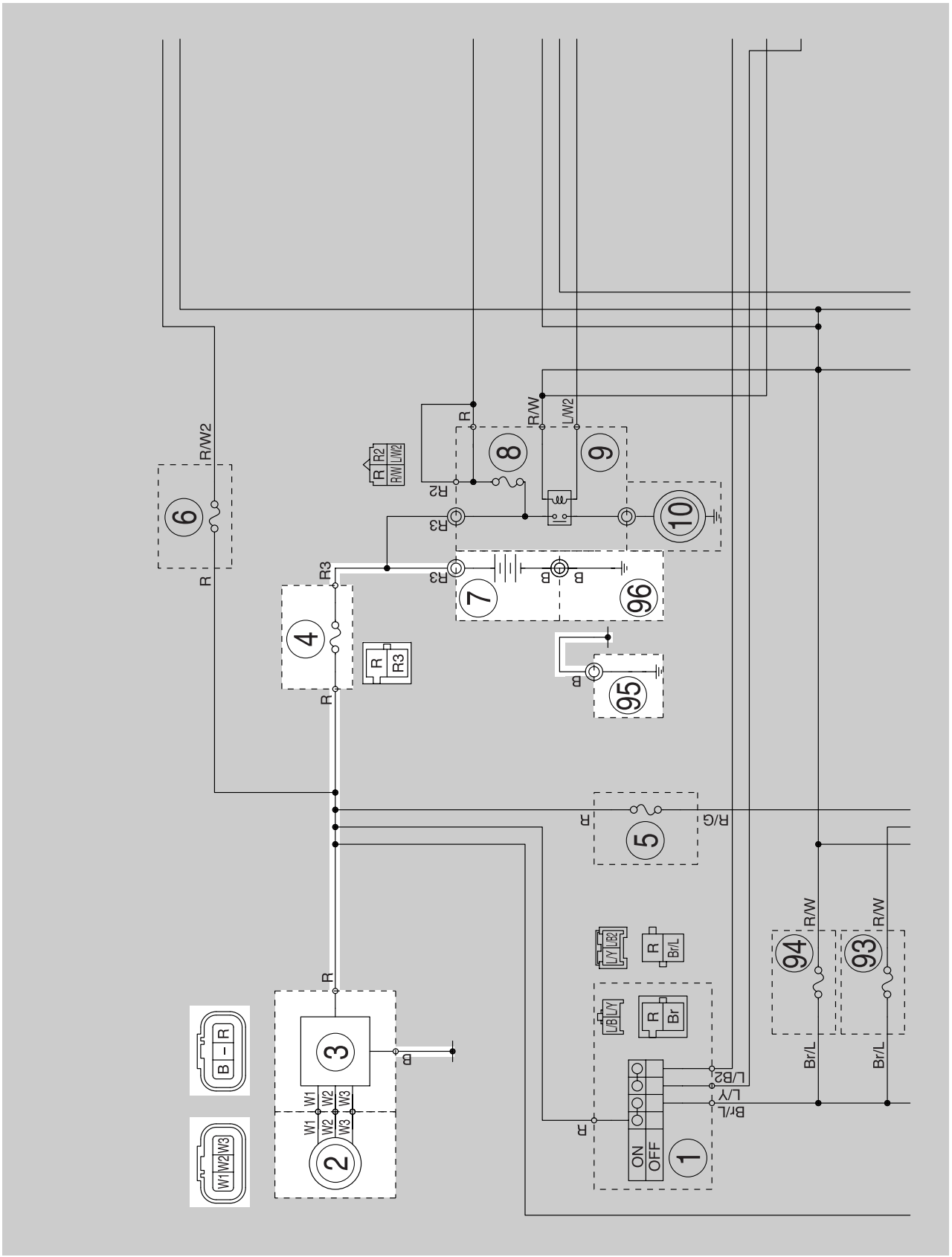

2. AC magneto
3. Rectifier/regulator
4. Main fuse
7. Battery
95. Engine ground
96. Battery negative lead

EAS27230

TROUBLESHOOTING

The battery is not being charged.

TIP

- Before troubleshooting, remove the following part(s):

1. Rider seat
2. Right side cowling

1. Check the fuse. (Main) Refer to "CHECKING THE FUSES" on page 8-109.	NG→	Replace the fuse.
OK↓		
2. Check the battery. Refer to "CHECKING AND CHARGING THE BATTERY" on page 8-109.	NG→	• Clean the battery terminals. • Recharge or replace the battery.
OK↓		
3. Check the stator coil. Refer to "CHECKING THE STATOR COIL" on page 8-118.	NG→	Replace the stator coil assembly.
OK↓		
4. Check the rectifier/regulator. Refer to "CHECKING THE RECTIFIER/REGULATOR" on page 8-119.	NG→	Replace the rectifier/regulator.
OK↓		
5. Check the entire charging system's wiring. Refer to "CIRCUIT DIAGRAM" on page 8-13.	NG→	Properly connect or repair the charging system's wiring.
OK↓		
The charging system circuit is OK.		

EAS27240
LIGHTING SYSTEM

EAS27250
CIRCUIT DIAGRAM

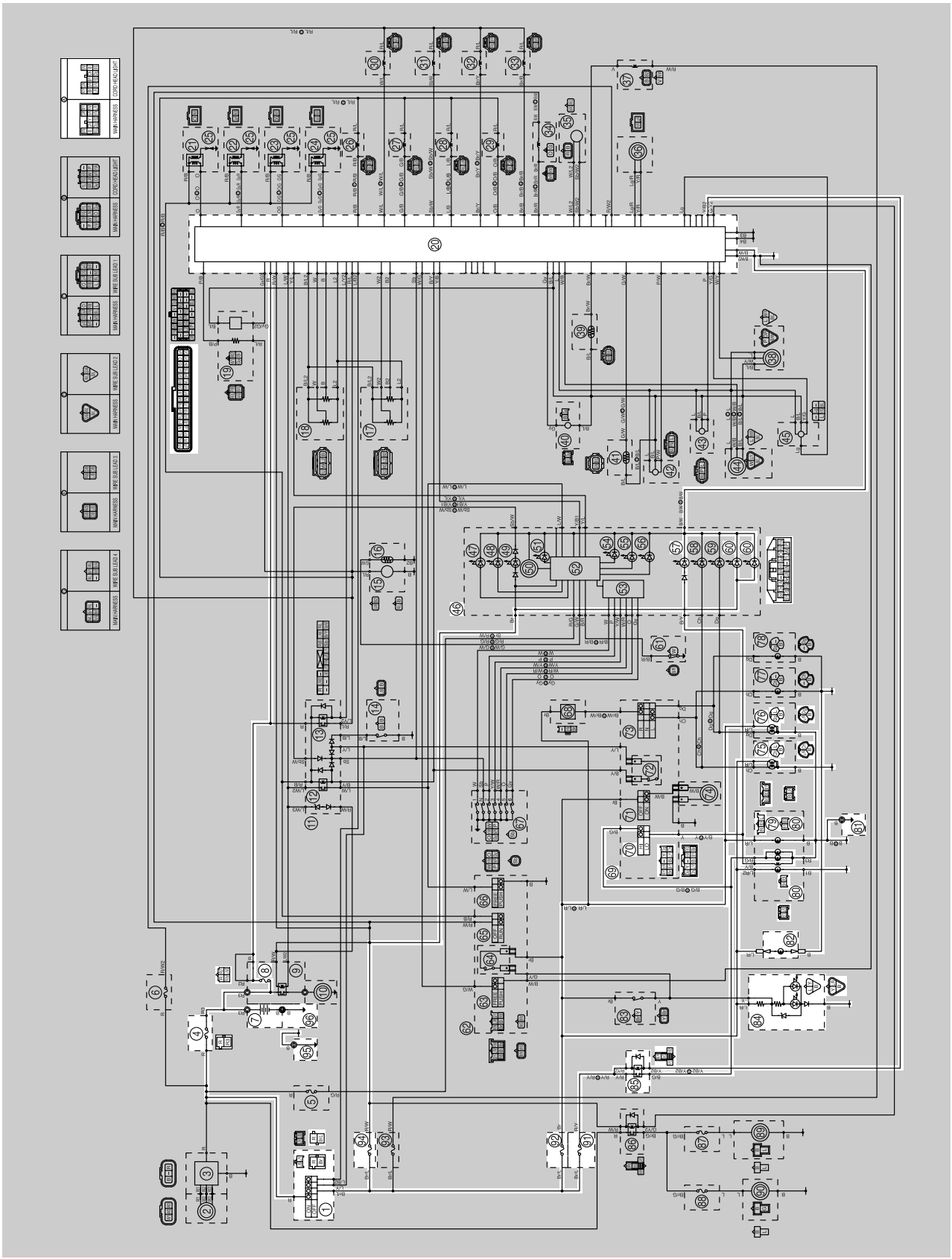

1. Main switch
4. Main fuse
7. Battery
8. Fuel injection system fuse
20. ECU (engine control unit)
46. Meter assembly
57. High beam indicator light
60. Meter light
69. Left handlebar switch
70. Dimmer switch
75. Front left turn signal/position light
76. Front right turn signal/position light
79. Headlight
80. Auxiliary light
81. Ground (cord headlight)
82. License plate light
84. Tail/brake light
85. Headlight relay
91. Headlight fuse
92. Signal fuse
94. Ignition fuse
95. Engine ground
96. Battery negative lead

EAS27260
TROUBLESHOOTING

Any of the following fail to light: headlight, high beam indicator light, taillight or license plate light.

TIP

- Before troubleshooting, remove the following part(s):

1. Rider seat
2. Left side cowling
3. Air intake air duct covers
4. Meter assembly

1. Check the each bulbs and bulb sockets condition. Refer to “CHECKING THE BULBS AND BULB SOCKETS” on page 8-108.	NG→	Replace the bulb(s) and bulb socket(s).
OK↓		
2. Check the fuses. (Main, headlight, ignition, signal and fuel injection system) Refer to “CHECKING THE FUSES” on page 8-109.	NG→	Replace the fuse(s).
OK↓		
3. Check the battery. Refer to “CHECKING AND CHARGING THE BATTERY” on page 8-109.	NG→	• Clean the battery terminals. • Recharge or replace the battery.
OK↓		
4. Check the main switch. Refer to “CHECKING THE SWITCHES” on page 8-105.	NG→	Replace the main switch.
OK↓		
5. Check the dimmer switch. Refer to “CHECKING THE SWITCHES” on page 8-105.	NG→	The dimmer switch is faulty. Replace the left handlebar switch.
OK↓		
6. Check the headlight relay. Refer to “CHECKING THE RELAYS” on page 8-113.	NG→	Replace the headlight relay.
OK↓		

7. Check the entire lighting system's wiring.
   Refer to "CIRCUIT DIAGRAM" on page 8-17.

NG→

Properly connect or repair the lighting system's wiring.

OK↓

Replace the ECU or meter assembly.

EAS27270
SIGNALING SYSTEM

EAS27280
CIRCUIT DIAGRAM

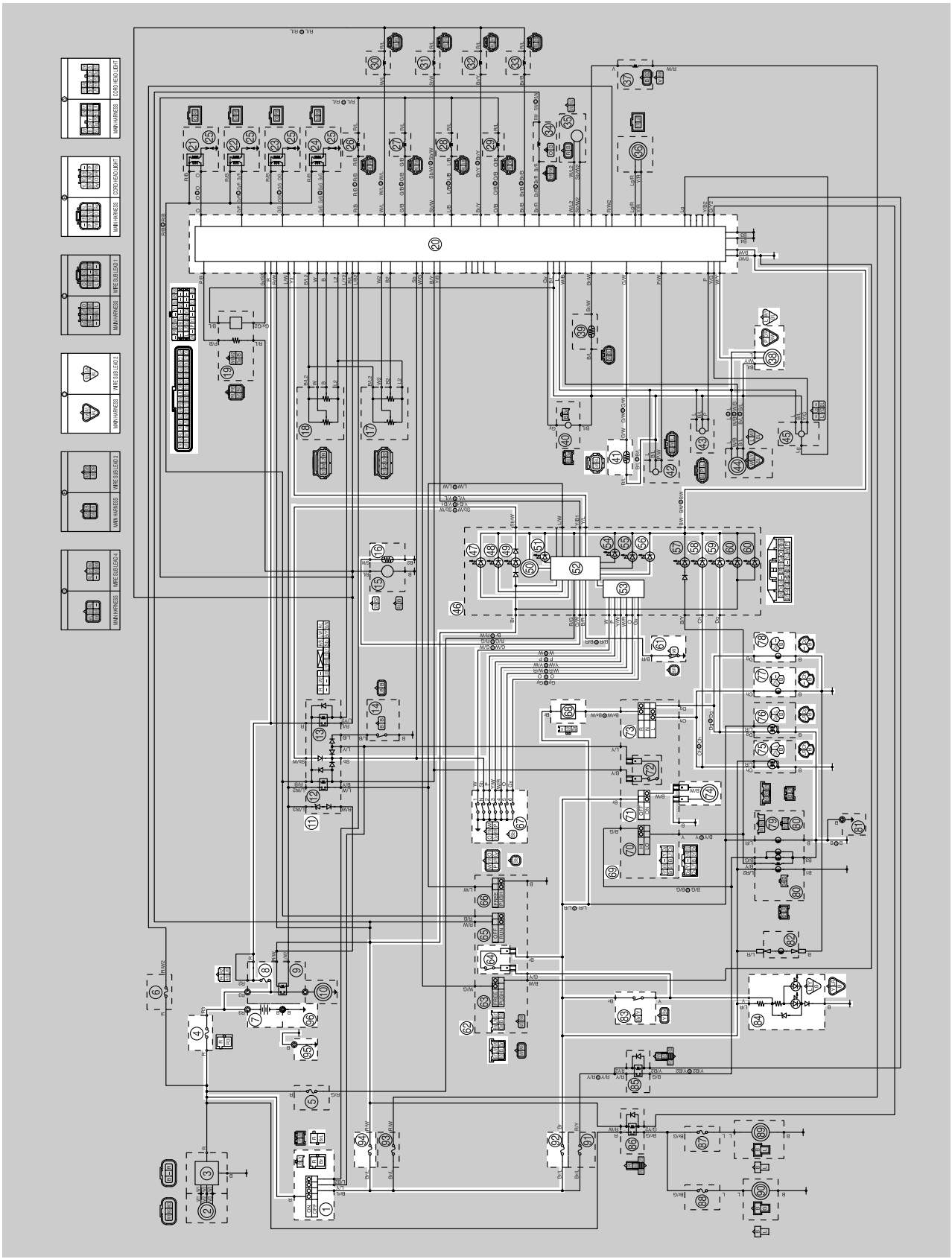

1. Main switch
4. Main fuse
7. Battery
8. Fuel injection system fuse
11. Relay unit
16. Fuel sender
20. ECU (engine control unit)
38. Speed sensor
41. Coolant temperature sensor
46. Meter assembly
47. Fuel level warning light
48. Oil level warning light
49. Neutral indicator light
50. Tachometer
51. Shift timing indicator light
52. Multi-function meter
53. Transmission gear display
56. Coolant temperature warning light
58. Left turn signal indicator light
59. Right turn signal indicator light
61. Oil level switch
62. Right handlebar switch
64. Front brake light switch
67. Gear position sensor
68. Turn signal relay
69. Left handlebar switch
71. Horn switch
73. Turn signal switch
74. Horn
75. Front left turn signal/position light
76. Front right turn signal/position light
77. Rear left turn signal light
78. Rear right turn signal light
83. Rear brake light switch
84. Tail/brake light
92. Signal fuse
94. Ignition fuse
95. Engine ground
96. Battery negative lead

EAS27290

TROUBLESHOOTING

- Any of the following fail to light: turn signal light, brake light or an indicator light.
- The horn fails to sound.

TIP

- Before troubleshooting, remove the following part(s):

1. Rider seat
2. Passenger seat
3. Fuel tank
4. Side cowlings
5. Meter assembly

1. Check the fuses. (Main, ignition, signal and fuel injection system) Refer to “CHECKING THE FUSES” on page 8-109.	NG→	Replace the fuse(s).
OK↓		
2. Check the battery. Refer to “CHECKING AND CHARGING THE BATTERY” on page 8-109.	NG→	• Clean the battery terminals. • Recharge or replace the battery.
OK↓		
3. Check the main switch. Refer to “CHECKING THE SWITCHES” on page 8-105.	NG→	Replace the main switch.
OK↓		
4. Check the entire signaling system’s wiring. Refer to “CIRCUIT DIAGRAM” on page 8-21.	NG→	Properly connect or repair the signaling system’s wiring.
OK↓		
This circuit is OK.		

Check the signaling system

The horn fails to sound.

1. Check the horn switch. Refer to “CHECKING THE SWITCHES” on page 8-105.	NG→	Replace the left handlebar switch.
OK↓		
2. Check the horn. Refer to “CHECKING THE HORN” on page 8-119.	NG→	Replace the horn.
OK↓		

3. Check the entire signaling system's wiring. Refer to "CIRCUIT DIAGRAM" on page 8-21.	NG→	Properly connect or repair the signaling system's wiring.
OK↓		
This circuit is OK.		

The tail/brake light fails to come on.

1. Check the front brake light switch. Refer to "CHECKING THE SWITCHES" on page 8-105.	NG→	Replace the front brake light switch.
OK↓		
2. Check the rear brake light switch. Refer to "CHECKING THE SWITCHES" on page 8-105.	NG→	Replace the rear brake light switch.
OK↓		
3. Check the entire signaling system's wiring. Refer to "CIRCUIT DIAGRAM" on page 8-21.	NG→	Properly connect or repair the signaling system's wiring.
OK↓		
This circuit is OK.		

The turn signal light, turn signal indicator light or both fail to blink.

1. Check the front turn signal/position light bulbs, rear turn signal light bulbs and sockets. Refer to "CHECKING THE BULBS AND BULB SOCKETS" on page 8-108.	NG→	Replace the front turn signal/position light bulb(s), rear turn signal light bulb(s), socket(s) or both.
OK↓		
2. Check the turn signal switch. Refer to "CHECKING THE SWITCHES" on page 8-105.	NG→	Replace the left handlebar switch.
OK↓		
3. Check the turn signal relay. Refer to "CHECKING THE TURN SIGNAL RELAY" on page 8-114.	NG→	Replace the turn signal relay.
OK↓		

4. Check the entire signaling system's wiring. Refer to "CIRCUIT DIAGRAM" on page 8-21.	NG→	Properly connect or repair the signaling system's wiring.

OK↓

Replace the meter assembly.

The neutral indicator light fails to come on.

1. Check the gear position sensor. Refer to "CHECKING THE GEAR POSITION SENSOR" on page 8-127.	NG→	Replace the gear position sensor.

OK↓

2. Check the relay unit (diode). Refer to "CHECKING THE RELAY UNIT (DIODE)" on page 8-115.	NG→	Replace the relay unit.

OK↓

3. Check the entire signaling system's wiring. Refer to "CIRCUIT DIAGRAM" on page 8-21.	NG→	Properly connect or repair the signaling system's wiring.

OK↓

Replace the meter assembly.

The oil level warning light fails to come on.

1. Check the oil level switch. Refer to "CHECKING THE OIL LEVEL SWITCH" on page 8-120.	NG→	Replace the oil level switch.

OK↓

2. Check the entire signaling system's wiring. Refer to "CIRCUIT DIAGRAM" on page 8-21.	NG→	Properly connect or repair the signaling system's wiring.

OK↓

Replace the meter assembly.

The fuel level warning light fails to come on.

1. Check the fuel sender. Refer to "CHECKING THE FUEL SENDER" on page 8-120.	NG→	Replace the fuel pump assembly.

OK↓

2. Check the entire signaling system's wiring. Refer to "CIRCUIT DIAGRAM" on page 8-21.	NG→	Properly connect or repair the signaling system's wiring.

OK↓

Replace the meter assembly.

The coolant temperature warning light fails to come on.

1. Check the coolant temperature sensor. Refer to "CHECKING THE COOLANT TEMPERATURE SENSOR" on page 8-122.	NG→	Replace the coolant temperature sensor.

OK↓

2. Check the entire signaling system's wiring. Refer to "CIRCUIT DIAGRAM" on page 8-21.	NG→	Properly connect or repair the signaling system's wiring.

OK↓

Replace the ECU or meter assembly.

The speedometer fails to operate.

1. Check the speed sensor. Refer to "CHECKING THE SPEED SENSOR" on page 8-121.	NG→	Replace the speed sensor.

OK↓

2. Check the entire signaling system's wiring. Refer to "CIRCUIT DIAGRAM" on page 8-21.	NG→	Properly connect or repair the signaling system's wiring.

OK↓

Replace the ECU or meter assembly.

The shift timing indicator light fails to come on.

1. Check that the shift timing indicator light is set to come on and that the brightness level of the light is adjusted properly. Refer to "FEATURES" on page 1-2.	NG→	Replace the meter assembly.

OK↓

2. Check the entire signaling system's wiring.
   Refer to "CIRCUIT DIAGRAM" on page 8-21.

NG→

Properly connect or repair the signaling system's wiring.

OK↓

Replace the meter assembly.

EAS27300
COOLING SYSTEM

EAS27310
CIRCUIT DIAGRAM

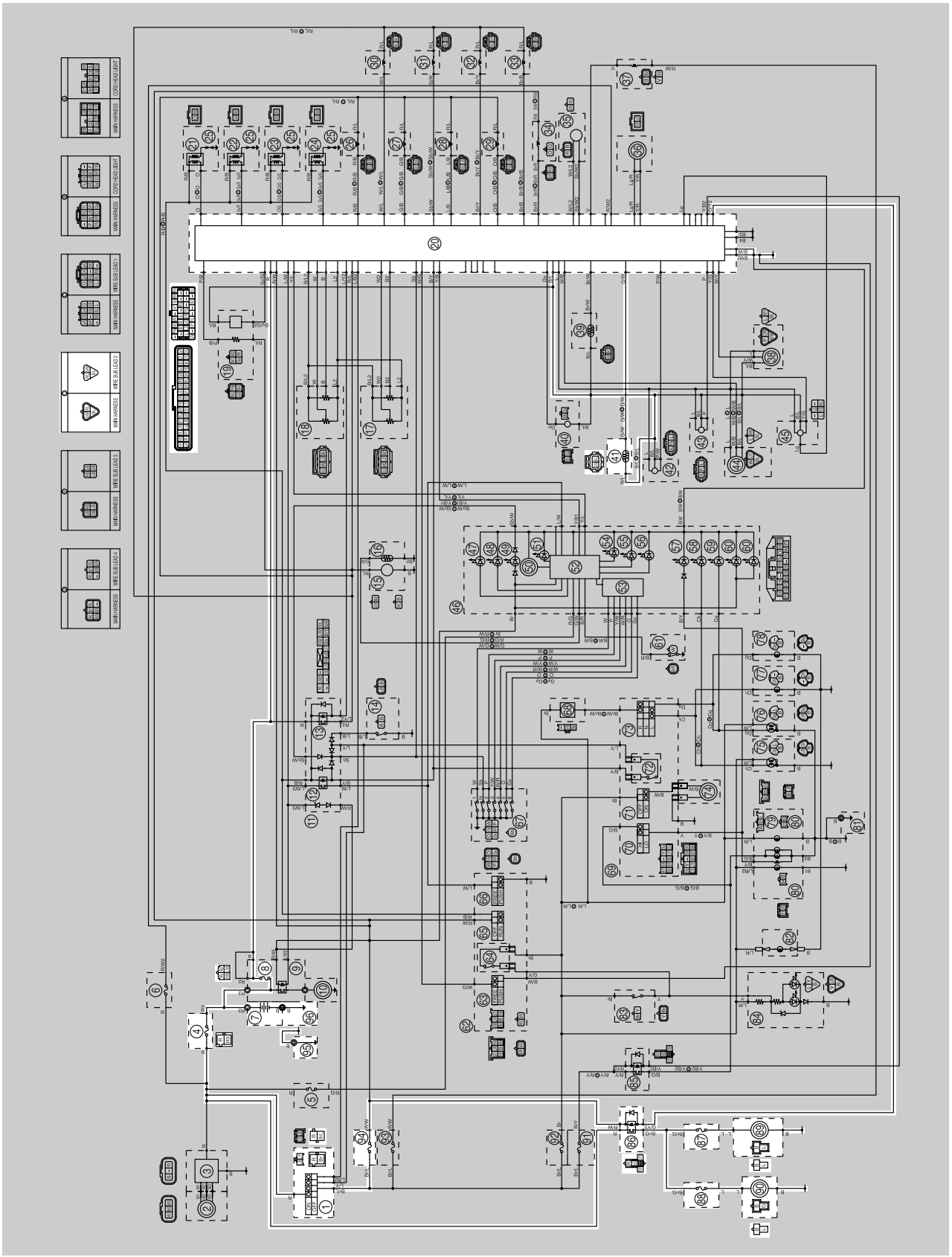

1. Main switch
4. Main fuse
7. Battery
8. Fuel injection system fuse
20. ECU (engine control unit)
41. Coolant temperature sensor
86. Radiator fan motor relay
87. Right radiator fan motor fuse
88. Left radiator fan motor fuse
89. Right radiator fan motor
90. Left radiator fan motor
94. Ignition fuse
95. Engine ground
96. Battery negative lead

EAS27320
TROUBLESHOOTING

TIP
- Before troubleshooting, remove the following part(s):
1. Rider seat
2. Fuel tank
3. Side cowlings

1. Check the fuses. (Main, ignition, radiator fan motor and fuel injection system) Refer to "CHECKING THE FUSES" on page 8-109.	NG→	Replace the fuse(s).
OK↓		
2. Check the battery. Refer to "CHECKING AND CHARGING THE BATTERY" on page 8-109.	NG→	• Clean the battery terminals. • Recharge or replace the battery.
OK↓		
3. Check the main switch. Refer to "CHECKING THE SWITCHES" on page 8-105.	NG→	Replace the main switch.
OK↓		
4. Check the radiator fan motors. Refer to "CHECKING THE RADIATOR FAN MOTOR" on page 8-121.	NG→	Replace the radiator fan motor(s).
OK↓		
5. Check the radiator fan motor relay. Refer to "CHECKING THE RELAYS" on page 8-113.	NG→	Replace the radiator fan motor relay.
OK↓		
6. Check the coolant temperature sensor. Refer to "CHECKING THE COOLANT TEMPERATURE SENSOR" on page 8-122.	NG→	Replace the coolant temperature sensor.
OK↓		
7. Check the entire cooling system's wiring. Refer to "CIRCUIT DIAGRAM" on page 8-29.	NG→	Properly connect or repair the cooling system's wiring.
OK↓		
Replace the ECU.		

EAS27330
FUEL INJECTION SYSTEM

EAS27340
CIRCUIT DIAGRAM

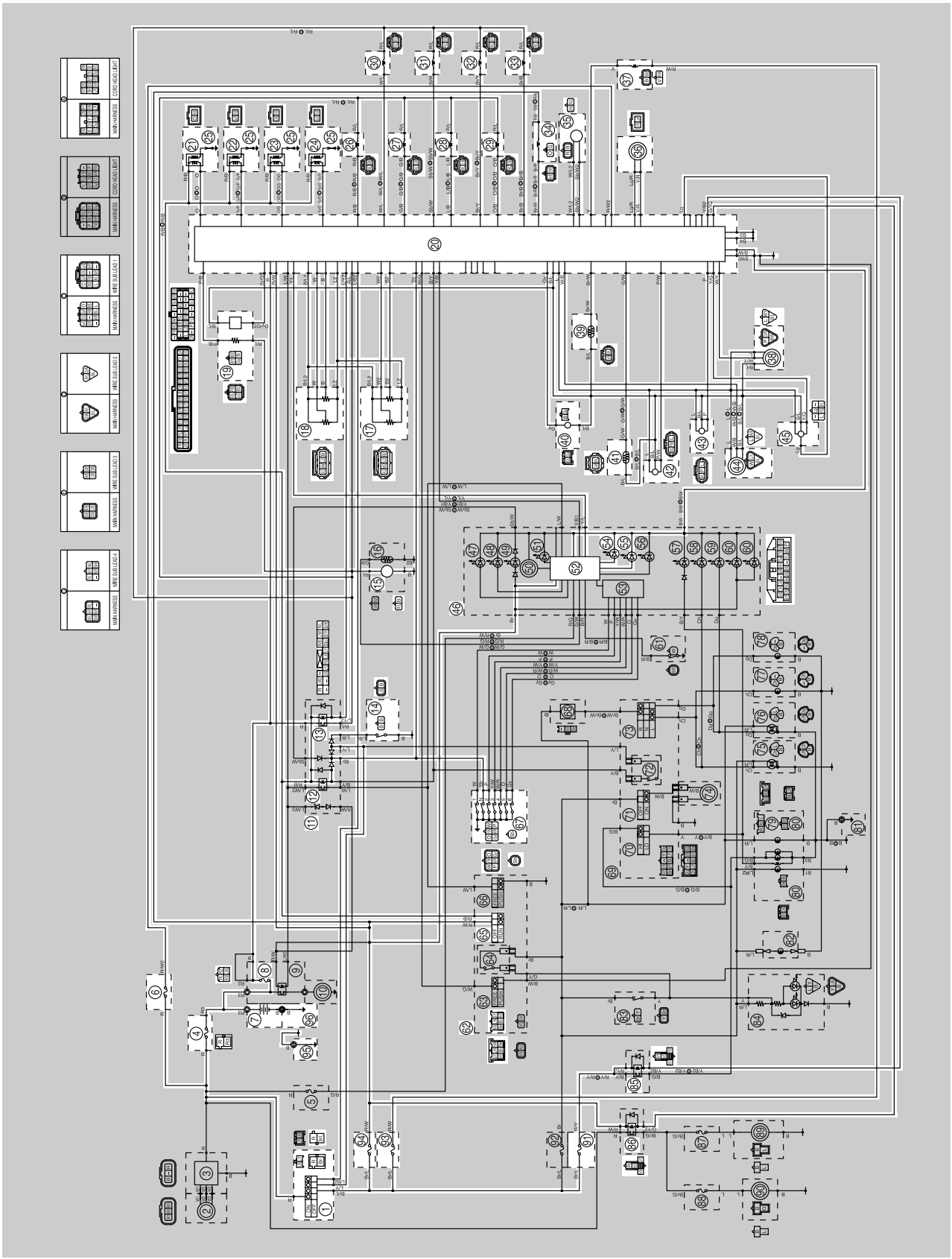

1. Main switch
4. Main fuse
6. ETV (Electronic Throttle Valve) fuse
7. Battery
8. Fuel injection system fuse
11. Relay unit
12. Starting circuit cut-off relay
13. Fuel pump relay
14. Sidestand switch
15. Fuel pump
17. Throttle position sensor
18. Accelerator position sensor
19. O_2 sensor
20. ECU (engine control unit)
21. Ignition coil #1
22. Ignition coil #2
23. Ignition coil #3
24. Ignition coil #4
25. Spark plug
26. Primary injector #1
27. Primary injector #2
28. Primary injector #3
29. Primary injector #4
30. Secondary injector #1
31. Secondary injector #2
32. Secondary injector #3
33. Secondary injector #4
34. Air induction system solenoid
35. Intake funnel servo motor
36. Throttle servo motor
37. Steering damper solenoid
38. Speed sensor
39. Intake air temperature sensor
40. Crankshaft position sensor
41. Coolant temperature sensor
42. Intake air pressure sensor
43. Atmospheric pressure sensor
44. Cylinder identification sensor
45. Lean angle sensor
46. Meter assembly
52. Multi-function meter
54. Steering damper warning light
55. Engine trouble warning light
62. Right handlebar switch
65. Engine stop switch
67. Gear position sensor
85. Headlight relay
86. Radiator fan motor relay
91. Headlight fuse
93. Steering damper fuse
94. Ignition fuse
95. Engine ground
96. Battery negative lead

EAS27350

ECU SELF-DIAGNOSTIC FUNCTION

The ECU is equipped with a self-diagnostic function in order to ensure that the fuel injection system is operating normally. If this function detects a malfunction in the system, it immediately operates the engine under substitute characteristics and illuminates the engine trouble warning light to alert the rider that a malfunction has occurred in the system. Once a malfunction has been detected, a fault code is stored in the memory of the ECU.

- To inform the rider that the fuel injection system is not functioning, the engine trouble warning light flashes when the start switch is being pushed to start the engine.
- If a malfunction is detected in the system by the self-diagnostic function, the ECU provides an appropriate substitute characteristic operation, and alerts the rider of the detected malfunction by illuminating the engine trouble warning light.
- After the engine has been stopped, the lowest fault code number appears on the odometer/tripmeter/fuel reserve tripmeter/instantaneous fuel consumption/average fuel consumption LCD. Once a fault code has been displayed, it remains stored in the memory of the ECU until it is deleted.

Engine trouble warning light indication and FI system operation

Warning light indication	ECU operation	FI operation	Vehicle operation
Flashing*	Warning provided when unable to start engine	Operation stopped	Cannot be operated
Remains on	Malfunction detected	Operated with substitute characteristics in accordance with the description of the malfunction	Can or cannot be operated depending on the fault code

* The warning light flashes when any one of the conditions listed below is present and the start switch is pushed:

11:	Cylinder identification sensor	30:	Lean angle sensor (latch up detected)
12:	Crankshaft position sensor	41:	Lean angle sensor (open or short-circuit)
19:	Sidestand switch (open circuit in the wire to the ECU)	50:	ECU internal malfunction (faulty ECU memory)

Checking the engine trouble warning light

The engine trouble warning light comes on for 1.4 seconds after the main switch has been turned to “ON” and it comes on while the start switch is being pushed. If the warning light does not come on under these conditions, the warning light (LED) may be defective.

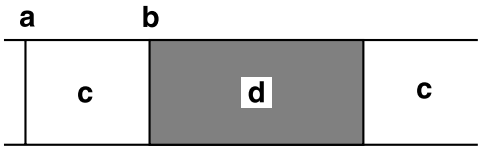

a. Main switch “OFF”
b. Main switch “ON”
c. Engine trouble warning light off
d. Engine trouble warning light on for 1.4 seconds

ECU detects an abnormal signal from a sensor

If the ECU detects an abnormal signal from a sensor while the vehicle is being driven, the ECU illuminates the engine trouble warning light and provides the engine with alternate operating instructions that are appropriate for the type of malfunction.

When an abnormal signal is received from a sensor, the ECU processes the specified values that are programmed for each sensor in order to provide the engine with alternate operating instructions that enable the engine to continue to operate or stop operating, depending on the conditions.

EAS14B1115
TROUBLESHOOTING METHOD

The engine operation is not normal and the engine trouble warning light comes on.

1. Check:
   - Fault code number

▼▼▼▼▼▼▼▼▼▼▼▼▼▼▼▼▼▼▼▼▼▼▼▼▼▼▼▼▼▼▼▼▼▼

a. Check the fault code number displayed on the meter.
b. Identify the faulty system with the fault code.
c. Identify the probable cause of the malfunction.

▲▲▲▲▲▲▲▲▲▲▲▲▲▲▲▲▲▲▲▲▲▲▲▲▲▲▲▲▲▲▲▲▲▲

2. Check and repair the probable cause of malfunction.

Fault code No.	No fault code No.
Check and repair. Refer to “TROUBLESHOOTING DETAILS” on page 8-44. Monitor the operation of the sensors and actuators in the diagnostic mode. Refer to “Sensor operation table” and “Actuator operation table”.	Check and repair.

3. Perform fuel injection system reinstatement action.
   Refer to “Reinstatement method” of table in “TROUBLESHOOTING DETAILS” on page 8-44.
4. Turn the main switch to “OFF” and back to “ON”, then check that no fault code number is displayed.

TIP
If fault codes are displayed, repeat steps (1) to (4) until no fault code number is displayed.

5. Erase the malfunction history in the diagnostic mode. Refer to “Sensor operation table (Diagnostic code No. D:62)”.

TIP
Turning the main switch to “OFF” will not erase the malfunction history.

The engine operation is not normal but the engine trouble warning light does not come on.

1. Check the operation of following sensors and actuators in the Diagnostic mode.
   Refer to “Sensor operation table” and “Actuator operation table”.

D:01: Throttle position sensor signal 1 (throttle angle) D:13: Throttle position sensor signal 2 (throttle angle) D:14: Accelerator position sensor signal 1 (throttle angle) D:15: Accelerator position sensor signal 2 (throttle angle) D:30: Cylinder-#1 ignition coil D:31: Cylinder-#2 ignition coil D:32: Cylinder-#3 ignition coil D:33: Cylinder-#4 ignition coil D:36: Primary injector #1 D:37: Primary injector #2 D:38: Primary injector #3 D:39: Primary injector #4 D:40: Secondary injector #1 D:41: Secondary injector #2 D:42: Secondary injector #3 D:43: Secondary injector #4 D:48: Air induction system solenoid

If a malfunction is detected in the sensors or actuators, repair or replace all faulty parts.
If no malfunction is detected in the sensors and actuators, check and repair inner parts of the engine.

EAS14B1084

DIAGNOSTIC MODE

Setting the diagnostic mode

1. Turn the main switch to “OFF” and set the engine stop switch to “◯”.
2. Disconnect the wire harness coupler from the fuel pump.
3. Simultaneously press and hold the “SELECT” and “RESET” buttons, turn the main switch to “ON”, and continue to press the buttons for 8 seconds or more.

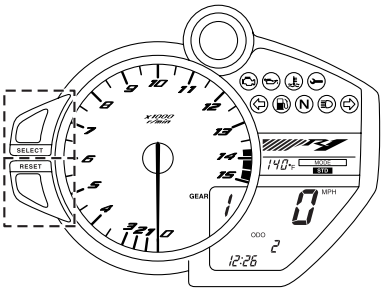

TIP

- All displays on the meter disappear.
- “dIAG” appears on the odometer/trip meter/fuel reserve trip meter/instantaneous fuel consumption/average fuel consumption LCD.

4. Press the “SELECT” switch to select the diagnostic mode “dIAG”.
5. After selecting “dIAG”, simultaneously press the “SELECT” switch and the “RESET” switch for 2 seconds or more to activate the diagnostic mode. The diagnostic code number “d01” appears on the clock/stopwatch LCD.
6. Set the engine stop switch to “⊗”.
7. Select the diagnostic code number corresponding to the fault code number by pressing the “SELECT” and “RESET” switches.

TIP

- To decrease the selected diagnostic code number, press the “RESET” switch “1”. Press the “RESET” switch for 1 second or longer to automatically decrease the diagnostic code numbers.
- To increase the selected diagnostic code number, press the “SELECT” switch “2”. Press the “SELECT” switch for 1 second or longer to automatically increase the diagnostic code numbers.

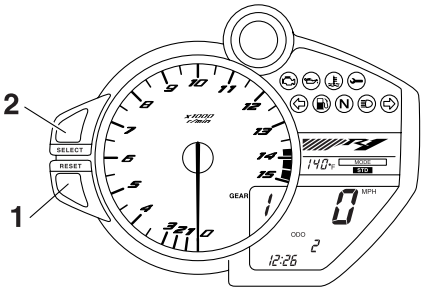

8. Verify the operation of the sensor or actuator.
   - Sensor operation
     The data representing the operating conditions of the sensor appears on the odometer/trip meter/fuel reserve trip meter/instantaneous fuel consumption/average fuel consumption LCD.
   - Actuator operation
     Set the engine stop switch to “◯” to operate the actuator.

TIP

If the engine stop switch is set to “◯”, set it to “⊗”, and then set it to “◯” again.

9. Turn the main switch to “OFF” to cancel the diagnostic mode.

Sensor operation table

Diagnostic code No.	Item	Meter display	Checking method
D:01	Throttle position sensor signal 1 • Fully closed position • Fully opened position	 12–21 96–106	 Check with throttle valves fully closed. Check with throttle valves fully open.
D:02	Atmospheric pressure	Displays the atmospheric pressure.	Compare the actually measured atmospheric pressure with the meter display value.
D:03	Pressure difference (atmospheric pressure and intake air pressure)	Displays the intake air pressure.	Set the engine stop switch to "○", and then push the start switch "⊛". (If the display value changes, the performance is OK.)
D:05	Intake air temperature	Displays the intake air temperature.	Compare the actually measured intake air temperature with the meter display value.
D:06	Coolant temperature	Displays the coolant temperature.	Compare the actually measured coolant temperature with the meter display value.
D:07	Vehicle speed pulse	0–999	Check that the number increases when the rear wheel is rotated. The number is cumulative and does not reset each time the wheel is stopped.
D:08	Lean angle sensor • Upright • Overturned	 0.4–1.4 3.7–4.4	Remove the lean angle sensor and incline it more than 45 degrees.
D:09	Fuel system voltage (battery voltage)	Approximately 12.0	Set the engine stop switch to "○", and then compare with the actually measured battery voltage. (If the battery voltage is lower, perform recharging.)
D:13	Throttle position sensor signal 2 • Fully closed position • Fully opened position	 9–23 94–108	 Check with throttle valves fully closed. Check with throttle valves fully open.

Diagnostic code No.	Item	Meter display	Checking method
D:14	Accelerator position sensor signal 1 • Fully closed position • Fully opened position	 12–22 97–107	 Check with throttle grip fully closed. Check with throttle grip fully open.
D:15	Accelerator position sensor signal 2 • Fully closed position • Fully opened position	 10–24 95–109	 Check with throttle grip fully closed. Check with throttle grip fully open.
D:20	Sidestand switch • Stand retracted • Stand extended	 ON OFF	Set on/off the sidestand switch. (with the transmission in gear)
D:21	Gear position switch • Neutral • In gear	 ON OFF	Shift the transmission.
D:60	EEPROM fault code display • No history • History exists	 00 01–04 (Cylinder fault code) • (If more than one cylinder is defective, the display alternates every two seconds to show all the detected cylinder numbers. When all cylinder numbers are shown, the display repeats the same process.)	—
D:61	Malfunction history code display • No history • History exists	 00 Fault codes 11–70 • (If more than one code number is detected, the display alternates every two seconds to show all the detected code numbers. When all code numbers are shown, the display repeats the same process.)	—

Diagnostic code No.	Item	Meter display	Checking method
D:62	Malfunction history code erasure • No history • History exists	0 • Displays the total number of malfunctions, including the current malfunction, that have occurred since the history was last erased. (For example, if there have been three malfunctions, “03” is displayed.)	— To erase the history, set the engine stop switch from “⊗” to “◯”.
D:63	Malfunction code reinstatement (for fault code No. 24 only) • No malfunction code • Malfunction code exists	00 Fault code 24, 40 • (If more than one code number is detected, the display alternates every two seconds to show all the detected code numbers. When all code numbers are shown, the display repeats the same process.)	— To reinstate, set the engine stop switch from “⊗” to “◯”.
D:70	Control number	0–254 [-]	—

Actuator operation table

Diagnostic code No.	Item	Meter display	Checking method
D:30	Cylinder-#1 ignition coil	Actuates the cylinder-#1 ignition coil five times at one-second intervals. Illuminates the engine trouble warning light.	Check the spark five times. • Connect an ignition checker.
D:31	Cylinder-#2 ignition coil	Actuates the cylinder-#2 ignition coil five times at one-second intervals. Illuminates the engine trouble warning light.	Check the spark five times. • Connect an ignition checker.
D:32	Cylinder-#3 ignition coil	Actuates the cylinder-#3 ignition coil five times at one-second intervals. Illuminates the engine trouble warning light.	Check the spark five times. • Connect an ignition checker.

Diagnostic code No.	Item	Meter display	Checking method
D:33	Cylinder-#4 ignition coil	Actuates the cylinder-#4 ignition coil five times at one-second intervals. Illuminates the engine trouble warning light.	Check the spark five times. • Connect an ignition checker.
D:34	Intake funnel servo motor	Actuates the intake funnels (up position down, position for each 3 seconds). Illuminates the engine trouble warning light.	Check the operating sound of the intake funnel servo motor.
D:36	Primary injector #1	Actuates the primary injector #1 five times at one-second intervals. Illuminates the engine trouble warning light.	Check the operating sound of the injector #1 five times.
D:37	Primary injector #2	Actuates the primary injector #2 five times at one-second intervals. Illuminates the engine trouble warning light.	Check the operating sound of the injector #2 five times.
D:38	Primary injector #3	Actuates the primary injector #3 five times at one-second intervals. Illuminates the engine trouble warning light.	Check the operating sound of the injector #3 five times.
D:39	Primary injector #4	Actuates the primary injector #4 five times at one-second intervals. Illuminates the engine trouble warning light.	Check the operating sound of the injector #4 five times.
D:40	Secondary injector #1	Actuates the secondary injector #1 five times at one-second intervals. Illuminates the engine trouble warning light.	Check the operating sound of the secondary injector #1 five times.
D:41	Secondary injector #2	Actuates the secondary injector #2 five times at one-second intervals. Illuminates the engine trouble warning light.	Check the operating sound of the secondary injector #2 five times.
D:42	Secondary injector #3	Actuates the secondary injector #3 five times at one-second intervals. Illuminates the engine trouble warning light.	Check the operating sound of the secondary injector #3 five times.

Diagnostic code No.	Item	Meter display	Checking method
D:43	Secondary injector #4	Actuates the secondary injector #4 five times at one-second intervals. Illuminates the engine trouble warning light.	Check the operating sound of the secondary injector #4 five times.
D:47	Steering damper solenoid	Set the engine stop switch to ON: Steering damper solenoid is ON. Set the engine stop switch to OFF: Steering damper solenoid is OFF. Illuminates the engine trouble warning light when the engine stop switch is ON.	Check the operating of the steering damper.
D:48	Air induction system solenoid	Actuates the air induction system solenoid five times at one-second intervals. Illuminates the engine trouble warning light.	Check the operating sound of the air induction system solenoid five times.
D:50	Fuel pump relay	Actuates the fuel pump relay five times at one-second intervals. Illuminates the engine trouble warning light. (The engine trouble warning light is OFF when the relay is ON, and the engine trouble warning light is ON when the relay is OFF).	Check the operating sound of the fuel pump relay five times.
D:51	Radiator fan motor relay	Actuates the radiator fan motor relay for five cycles of five seconds. (ON 2 seconds, OFF 3 seconds) Illuminates the engine trouble warning light.	Check the operating sound of the radiator fan motor relay five times.
D:52	Headlight relay	Actuates the headlight relay for five cycles of five seconds. (ON 2 seconds, OFF 3 seconds) Illuminates the engine trouble warning light.	Check the operating sound of the headlight relay five times.

EAS14B1085

TROUBLESHOOTING DETAILS

This section describes the measures per fault code number displayed on the meter. Check and service the items or components that are the probable cause of the malfunction following the order given.

After the check and service of the malfunctioning part has been completed, reset the meter display according to the reinstatement method.

Fault code No.:

Code number displayed on the meter when the engine failed to work normally.

Diagnostic code No.:

Diagnostic code number to be used when the diagnostic mode is operated. Refer to “DIAGNOSTIC MODE” on page 8-38.

Fault code No.	**11**
Symptom	**Normal signals are not received from the cylinder identification sensor.**
Fail-safe action	**Engine startup: Impossible**
	Riding: Possible
Diagnostic monitoring code No.	**—**
Meter display	**—**
Checking method	**—**

	Item/components and probable cause	Check or maintenance job	Sensor inspection procedure
1	Connection of cylinder identification sensor coupler Check the connection of the coupler is secure. Remove the coupler, and check each pin (for bending, wear, or locking).	Poor connection → Connect it securely, or repair/replace the wire harness.	Crank the engine, and check the fault code indication. No fault code indicated. → Recovered. Fault code indicated. → Check the next step.
2	Connection of main harness ECU coupler Check the connection of the coupler is secure. Remove the coupler, and check each pin (for bending, wear, or locking).	Poor connection → Connect it securely, or repair/replace the wire harness.	Crank the engine, and check the fault code indication. No fault code indicated. → Recovered. Fault code indicated. → Check the next step.
3	Continuity of wire harness	Open or short circuit → Replace the wire harness. White/Black–White/Black Black/Blue–Black/Blue Blue–Blue	Crank the engine, and check the fault code indication. No fault code indicated. → Recovered. Fault code indicated. → Check the next step.
4	Sensor installation status - Check the mounting section for loose or pinched mounting.	Incorrect installation → Reinstall or repair the sensor.	Crank the engine, and check the fault code indication. No fault code indicated. → Recovered. Fault code indicated. → Check the next step.

Fault code No.	**11**		
Symptom	**Normal signals are not received from the cylinder identification sensor.**		
Fail-safe action	**Engine startup: Impossible**		
	Riding: Possible		
Diagnostic monitoring code No.	**—**		
Meter display	**—**		
Checking method	**—**		
	Item/components and probable cause	**Check or maintenance job**	**Sensor inspection procedure**
5	Cylinder identification sensor malfunction	Sensor inspection procedure Refer to “CHECKING THE CYLINDER IDENTIFICATION SENSOR” on page 8-125.	Crank the engine, and check the fault code indication. No fault code indicated. → Recovered. Fault code indicated. → Check the next step.
6	ECU malfunction	Replace the ECU.	

Fault code No.	**12**		
Symptom	**Normal signals are not received from the crankshaft position sensor.**		
Fail-safe action	**Engine startup: Impossible**		
	Riding: Impossible		
Diagnostic monitoring code No.	**—**		
Meter display	**—**		
Checking method	**—**		
	Item/components and probable cause	**Check or maintenance job**	**Sensor inspection procedure**
1	Connection of crankshaft position sensor coupler Check the connection of the coupler is secure. Remove the coupler, and check each pin (for bending, wear, or locking).	Poor connection → Connect it securely, or repair/replace the wire harness.	Crank the engine, and check the fault code indication. No fault code indicated. → Recovered. Fault code indicated. → Check the next step.
2	Connection of main harness ECU coupler Check the connection of the coupler is secure. Remove the coupler, and check each pin (for bending, wear, or locking).	Poor connection → Connect it securely, or repair/replace the wire harness.	Crank the engine, and check the fault code indication. No fault code indicated. → Recovered. Fault code indicated. → Check the next step.
3	Continuity of wire harness	Open or short circuit → Replace the wire harness. Gray–Gray Black/Blue–Black/Blue	Crank the engine, and check the fault code indication. No fault code indicated. → Recovered. Fault code indicated. → Check the next step.

Fault code No.	**12**
Symptom	**Normal signals are not received from the crankshaft position sensor.**
Fail-safe action	**Engine startup: Impossible**
	Riding: Impossible
Diagnostic monitoring code No.	**—**
Meter display	**—**
Checking method	**—**

	Item/components and probable cause	Check or maintenance job	Sensor inspection procedure
4	Sensor installation status - Check the mounting section for loose or pinched mounting.	Incorrect installation → Reinstall or repair the sensor.	Crank the engine, and check the fault code indication. No fault code indicated. → Recovered. Fault code indicated. → Check the next step.
5	Crankshaft position sensor malfunction	Sensor inspection procedure Refer to “CHECKING THE CRANKSHAFT POSITION SENSOR” on page 8-117.	Crank the engine, and check the fault code indication. No fault code indicated. → Recovered. Fault code indicated. → Check the next step.
6	ECU malfunction	Replace the ECU.	

If fault codes 13 and 14 are indicated simultaneously, take the actions specified for fault code 13 first.

Fault code No.	**13**
Symptom	**Open or short circuit of intake air pressure sensor lead**
Fail-safe action	**Engine startup: Possible**
	Riding: Possible
Diagnostic monitoring code No.	**D:03**
Meter display	**Displays the intake air pressure.**
Checking method	**Set the engine stop switch to "◯", and then push the start switch "⊛". (If the display value changes, the performance is OK.)**

	Item/components and probable cause	Check or maintenance job	Sensor inspection procedure
1	Connection of intake air pressure sensor coupler Check the connection of the coupler is secure. Remove the coupler, and check each pin (for bending, wear, or locking).	Poor connection → Connect it securely, or repair/replace the wire harness.	Place the main switch to the ON position, and check the fault code indication. No fault code indicated. → Recovered. Fault code indicated. → Check the next step.
2	Connection of main harness ECU coupler Check the connection of the coupler is secure. Remove the coupler and check each pin (for bending, wear, or locking).	Poor connection → Connect it securely, or repair/replace the wire harness.	Place the main switch to the ON position, and check the fault code indication. No fault code indicated. → Recovered. Fault code indicated. → Check the next step.
3	Continuity of wire harness	Open or short circuit → Replace the wire harness. Black/Blue–Black/Blue Pink/White–Pink/White Blue–Blue	Place the main switch to the ON position, and check the fault code indication. No fault code indicated. → Recovered. Fault code indicated. → Check the next step.
4	Sensor installation status - Check the mounting section for loose or pinched mounting.	Incorrect installation → Reinstall or repair the sensor.	Place the main switch to the ON position, and check the fault code indication. No fault code indicated. → Recovered. Fault code indicated. → Check the next step.

Fault code No.	**13**
Symptom	**Open or short circuit of intake air pressure sensor lead**
Fail-safe action	**Engine startup: Possible**
	Riding: Possible
Diagnostic monitoring code No.	**D:03**
Meter display	**Displays the intake air pressure.**
Checking method	**Set the engine stop switch to "◯", and then push the start switch "⊛". (If the display value changes, the performance is OK.)**

	Item/components and probable cause	Check or maintenance job	Sensor inspection procedure
5	Intake air pressure sensor malfunction	Check in the diagnostic mode (Code No. 03). When engine is stopped: Atmospheric pressure at the current altitude and weather conditions is indicated. 0 m above sea level: Approx. 101 kPa 1000 m above sea level: Approx. 90 kPa 2000 m above sea level: Approx. 80 kPa 3000 m above sea level: Approx. 70 kPa When engine is cranking: Make sure that the indication value changes. Incorrect indication → Sensor malfunction → Replace the intake air pressure sensor. Sensor inspection procedure Refer to "CHECKING THE INTAKE AIR PRESSURE SENSOR" on page 8-125.	Place the main switch to the ON position, and check the fault code indication. No fault code indicated. → Recovered. Fault code indicated. → Check the next step.
6	ECU malfunction	Replace the ECU.	

If fault codes 13 and 14 are indicated simultaneously, take the actions specified for fault code 13 first.

Fault code No.	**14**
Symptom	**The intake air pressure sensor has failed (due to clogging of hose or sensor disconnection).**
Fail-safe action	**Engine startup: Possible**
	Riding: Possible
Diagnostic monitoring code No.	**D:03**
Meter display	**Displays the intake air pressure.**
Checking method	**Set the engine stop switch to "◯", and then push the start switch "⊛". (If the display value changes, the performance is OK.)**

	Item/components and probable cause	Check or maintenance job	Sensor inspection procedure
1	The intake air pressure sensor hose is damaged, disconnected, clogged, twisted or bent.	Repair or replace the sensor hose.	Starting the engine and operating it at idle. Fully close the throttle and check the fault recovery.
2	Intake air pressure sensor malfunction	Check in the diagnostic mode (Code No. 03). When engine is stopped: Atmospheric pressure at the current altitude and weather conditions is indicated. 0 m above sea level: Approx. 101 kPa 1000 m above sea level: Approx. 90 kPa 2000 m above sea level: Approx. 80 kPa 3000 m above sea level: Approx. 70 kPa When engine is cranking: Make sure that the indication value changes. The value does not change when engine is cranking. → Replace the intake air pressure sensor. Sensor inspection procedure Refer to "CHECKING THE INTAKE AIR PRESSURE SENSOR" on page 8-125.	
3	ECU malfunction	Replace the ECU.	

Fault code No.		**15**
Symptom		**Open or short circuit of throttle position sensor lead**
Fail-safe action		**Engine startup: Possible under certain conditions**
		Riding: Possible under certain conditions
Diagnostic monitoring code No.		**D:01** **D:13**
D:01	**Meter display**	**Throttle position sensor signal 1** **• 12–21 (fully closed position)** **• 97–106 (fully opened position)**
	Checking method	**• Check with throttle valve fully closed.** **• Check with throttle valve fully opened.**
D:13	**Meter display**	**Throttle position sensor signal 2** **• 9–23 (fully closed position)** **• 94–108 (fully opened position)**
	Checking method	**• Check with throttle valve fully closed.** **• Check with throttle valve fully opened.**

	Item/components and probable cause	**Check or maintenance job**	**Sensor inspection procedure**
1	Connection of throttle position sensor coupler Check the connection of the coupler is secure. Remove the coupler, and check each pin (for bending, wear, or locking).	Poor connection → Connect it securely, or repair/replace the wire harness.	Place the main switch to the ON position, and check the fault code indication. No fault code indicated. → Recovered. Fault code indicated. → Check the next step.
2	Connection of main harness ECU coupler Check the connection of the coupler is secure. Remove the coupler, and check each pin (for bending, wear, or locking).	Poor connection → Connect it securely, or repair/replace the wire harness.	Place the main switch to the ON position, and check the fault code indication. No fault code indicated. → Recovered. Fault code indicated. → Check the next step.
3	Continuity of wire harness	Open or short circuit → Replace the wire harness. Black/Blue–Black/Blue White–White Blue–Blue Black–Black	Place the main switch to the ON position, and check the fault code indication. No fault code indicated. → Recovered. Fault code indicated. → Check the next step.
4	Sensor installation status	Check for loose mounting, pinched mounting, or hard mounting. Make sure that the mounting position is correct. Refer to “ADJUSTING THE THROTTLE POSITION SENSOR” on page 7-19.	Place the main switch to the ON position, and check the fault code indication. No fault code indicated. → Recovered. Fault code indicated. → Check the next step.

Fault code No.		**15**
Symptom		**Open or short circuit of throttle position sensor lead**
Fail-safe action		**Engine startup: Possible under certain conditions**
		Riding: Possible under certain conditions
Diagnostic monitoring code No.		**D:01** **D:13**
D:01	**Meter display**	**Throttle position sensor signal 1** **• 12–21 (fully closed position)** **• 97–106 (fully opened position)**
	Checking method	**• Check with throttle valve fully closed.** **• Check with throttle valve fully opened.**
D:13	**Meter display**	**Throttle position sensor signal 2** **• 9–23 (fully closed position)** **• 94–108 (fully opened position)**
	Checking method	**• Check with throttle valve fully closed.** **• Check with throttle valve fully opened.**

	Item/components and probable cause	**Check or maintenance job**		**Sensor inspection procedure**
5	Supply voltage of throttle position sensor lead	Check the supply voltage. Throttle position sensor signal 1 Black/Blue–White Throttle position sensor signal 2 Black/Blue–Black Refer to “CHECKING THE THROTTLE POSITION SENSOR” on page 8-122.		Place the main switch to the ON position, and check the fault code indication. No fault code indicated. → Recovered. Fault code indicated. → Check the next step.
		Line disconnection points	Output voltage	
		Disconnection of ground lead	5 V	
		Disconnection of output line	0 V	
		Disconnection of power supply line	0 V	

Fault code No.		**15**
Symptom		**Open or short circuit of throttle position sensor lead**
Fail-safe action		**Engine startup: Possible under certain conditions**
		Riding: Possible under certain conditions
Diagnostic monitoring code No.		**D:01** **D:13**
D:01	**Meter display**	**Throttle position sensor signal 1** **• 12–21 (fully closed position)** **• 97–106 (fully opened position)**
	Checking method	**• Check with throttle valve fully closed.** **• Check with throttle valve fully opened.**
D:13	**Meter display**	**Throttle position sensor signal 2** **• 9–23 (fully closed position)** **• 94–108 (fully opened position)**
	Checking method	**• Check with throttle valve fully closed.** **• Check with throttle valve fully opened.**

	Item/components and probable cause	**Check or maintenance job**	**Sensor inspection procedure**
6	Throttle position sensor malfunction	Check the throttle position sensor signal 1 diagnostic mode (Code No. 01). When throttle is fully closed: A value of 12–21 is indicated. When throttle is fully opened: A value of 97–106 is indicated. Check the throttle position sensor signal 2 diagnostic mode (Code No. 13). When throttle is fully closed: A value of 9–23 is indicated. When throttle is fully opened: A value of 94–108 is indicated. If the indication is outside of range: Replace the throttle position sensor.	Place the main switch to the ON position, and check the fault code indication. No fault code indicated. → Recovered. Fault code indicated. → Check the next step.
7	ECU malfunction	Replace the ECU.	

Fault code No.	**19**
Symptom	**Open or short circuit of ECU input line (Blue/Yellow lead)**
Fail-safe action	**Engine startup: Impossible**
	Riding: Impossible
Diagnostic monitoring code No.	**D:20**
Meter display	**Sidestand switch** **• ON (stand retracted)** **• OFF (stand extended)**
Checking method	**Set on/off the sidestand switch. (with the transmission in gear.)**

	Item/components and probable cause	Check or maintenance job	Sensor inspection procedure
1	Connection of sidestand switch coupler Check the connection of the coupler is secure. Remove the coupler, and check each pin (for bending, wear, or locking).	Poor connection → Connect it securely, or repair/replace the wire harness.	Place the main switch to the ON position, and check the fault code indication when the sidestand is retracted and extended. No fault code indicated. → Recovered. Fault code indicated. → Check the next step.
2	Connection of main harness ECU coupler Check the connection of the coupler is secure. Remove the coupler, and check each pin (for bending, wear, or locking).	Poor connection → Connect it securely, or repair/replace the wire harness.	Place the main switch to the ON position, and check the fault code indication when the sidestand is retracted and extended. No fault code indicated. → Recovered. Fault code indicated. → Check the next step.
3	Connection of main switch coupler Check the connection of the coupler is secure. Remove the coupler, and check each pin (for bending, wear, or locking).	Poor connection → Connect it securely, or repair/replace the wire harness.	Place the main switch to the ON position, and check the fault code indication when the sidestand is retracted and extended. No fault code indicated. → Recovered. Fault code indicated. → Check the next step.
4	Continuity of wire harness	Open or short circuit → Replace the wire harness. Blue/Yellow–Blue/Yellow Blue/Black–Blue/Black	Place the main switch to the ON position, and check the fault code indication when the sidestand is retracted and extended. No fault code indicated. → Recovered. Fault code indicated. → Check the next step.

Fault code No.	**19**
Symptom	**Open or short circuit of ECU input line (Blue/Yellow lead)**
Fail-safe action	**Engine startup: Impossible**
	Riding: Impossible
Diagnostic monitoring code No.	**D:20**
Meter display	**Sidestand switch** **• ON (stand retracted)** **• OFF (stand extended)**
Checking method	**Set on/off the sidestand switch. (with the transmission in gear.)**

	Item/components and probable cause	Check or maintenance job	Sensor inspection procedure
5	Sidestand switch malfunction	Diagnostic mode (Code No. 20). Sidestand retracted: ON indication Sidestand extended: OFF indication Indication is incorrect. → Replace the sidestand switch.	Place the main switch to the ON position, and check the fault code indication when the sidestand is retracted and extended. No fault code indicated. → Recovered. Fault code indicated. → Check the next step.
6	ECU malfunction	Replace the ECU.	

Fault code No.		**20**
Symptom		**When the main switch is ON, there is a big difference in voltage value of the intake air pressure sensor and atmospheric pressure sensor**
Fail-safe action		**Engine startup: Possible**
		Riding: Possible
Diagnostic monitoring code No.		**D:03** **D:02**
D:03	**Meter display**	**Displays the intake air pressure.**
	Checking method	**Set the engine stop switch to "◯", and then push the start switch "⊛". (If the display value changes, the performance is OK.)**
D:02	**Meter display**	**Displays the atmospheric pressure.**
	Checking method	**Compare the actually measured atmospheric pressure with the meter display value.**

	Item/components and probable cause	Check or maintenance job	Sensor inspection procedure
1	Intake air pressure sensor malfunction	Check in the diagnostic mode (Code No. 03). When engine is stopped: Atmospheric pressure at the current altitude and weather conditions is indicated. 0 m above sea level: Approx. 101 kPa 3000 m above sea level: Approx. 70 kPa Incorrect indication → Sensor malfunction → Replace the intake air pressure sensor. Sensor inspection procedure Refer to "CHECKING THE INTAKE AIR PRESSURE SENSOR" on page 8-125.	Place the main switch to the ON position, and check the fault code indication. No fault code indicated. → Recovered. Fault code indicated. → Check the next step.

Fault code No.		**20**
Symptom		**When the main switch is ON, there is a big difference in voltage value of the intake air pressure sensor and atmospheric pressure sensor**
Fail-safe action		**Engine startup: Possible**
		Riding: Possible
Diagnostic monitoring code No.		**D:03** **D:02**
D:03	**Meter display**	**Displays the intake air pressure.**
	Checking method	**Set the engine stop switch to "◯", and then push the start switch "⊛". (If the display value changes, the performance is OK.)**
D:02	**Meter display**	**Displays the atmospheric pressure.**
	Checking method	**Compare the actually measured atmospheric pressure with the meter display value.**

	Item/components and probable cause	Check or maintenance job	Sensor inspection procedure
2	Atmospheric pressure sensor malfunction	Check in the diagnostic mode (Code No. 02). When engine is stopped: Atmospheric pressure at the current altitude and weather conditions is indicated. 0 m above sea level: Approx. 101 kPa 3000 m above sea level: Approx. 70 kPa Incorrect indication → Sensor malfunction → Replace the atmospheric pressure sensor. Sensor inspection procedure. Refer to "CHECKING THE ATMOSPHERIC PRESSURE SENSOR" on page 8-124.	Place the main switch to the ON position, and check the fault code indication. No fault code indicated. → Recovered. Fault code indicated. → Check the next step.
3	ECU malfunction	Replace the ECU.	

*Check the sensor only when the engine is cold.

Fault code No.	**21**
Symptom	**Open or short circuit of coolant temperature sensor lead**
Fail-safe action	**Engine startup: Possible**
	Riding: Possible
Diagnostic monitoring code No.	**D:06**
Meter display	**Displays the coolant temperature.**
Checking method	**Compare the actually measured coolant temperature with the meter display value.**

	Item/components and probable cause	Check or maintenance job	Sensor inspection procedure
1	Connection of coolant temperature sensor coupler Check the connection of the coupler is secure. Remove the coupler, and check each pin (for bending, wear, or locking).	Poor connection → Connect it securely, or repair/replace the wire harness.	Place the main switch to the ON position, and check the fault code indication. No fault code indicated. → Recovered. Fault code indicated. → Check the next step.
2	Connection of main harness ECU coupler Check the connection of the coupler is secure. Remove the coupler, and check each pin (for bending, wear, or locking).	Poor connection → Connect it securely, or repair/replace the wire harness.	Place the main switch to the ON position, and check the fault code indication. No fault code indicated. → Recovered. Fault code indicated. → Check the next step.
3	Continuity of wire harness	Open or short circuit → Replace the wire harness Black/Blue–Black/Blue Green/White–Green/White	Place the main switch to the ON position, and check the fault code indication. No fault code indicated. → Recovered. Fault code indicated. → Check the next step.
4	Installation status of coolant temperature sensor	Check the mounting section for a loose or pinched mounting. Make sure that the mounting position is correct.	Place the main switch to the ON position, and check the fault code indication. No fault code indicated. → Recovered. Fault code indicated. → Check the next step.
5	Coolant temperature sensor malfunction	Check in the diagnostic mode (Code No. 06). During cold starting: A temperature close to the ambient temperature is indicated. Indication is incorrect. → Replace the coolant temperature sensor.	Place the main switch to the ON position, and check the fault code indication. No fault code indicated. → Recovered. Fault code indicated. → Check the next step.
6	ECU malfunction	Replace the ECU.	

*Check the sensor only when the engine is cold.

Fault code No.	**22**
Symptom	**Open or short circuit of intake air temperature sensor lead**
Fail-safe action	**Engine startup: Possible**
	Riding: Possible
Diagnostic monitoring code No.	**D:05**
Meter display	**Displays the intake air temperature.**
Checking method	**Compare the actually measured intake air temperature with the meter display value.**

	Item/components and probable cause	Check or maintenance job	Sensor inspection procedure
1	Connection of intake air temperature sensor coupler Check the connection of the coupler is secure. Remove the coupler, and check each pin (for bending, wear, or locking).	Poor connection → Connect it securely, or repair/replace the wire harness.	Place the main switch to the ON position, and check the fault code indication. No fault code indicated. → Recovered. Fault code indicated. → Check the next step.
2	Connection of main harness ECU coupler Check the connection of the coupler is secure. Remove the coupler, and check each pin (for bending, wear, or locking).	Poor connection → Connect it securely, or repair/replace the wire harness.	Place the main switch to the ON position, and check the fault code indication. No fault code indicated. → Recovered. Fault code indicated. → Check the next step.
3	Continuity of wire harness	Open or short circuit → Replace the wire harness. Black/Blue–Black/Blue Brown/White–Brown/White	Place the main switch to the ON position, and check the fault code indication. No fault code indicated. → Recovered. Fault code indicated. → Check the next step.
4	Installation status of intake air temperature sensor	Check the mounting section for a loose or pinched mounting. Make sure that the mounting position is correct.	Place the main switch to the ON position, and check the fault code indication. No fault code indicated. → Recovered. Fault code indicated. → Check the next step.

Fault code No.	**22**		
Symptom	**Open or short circuit of intake air temperature sensor lead**		
Fail-safe action	**Engine startup: Possible**		
	Riding: Possible		
Diagnostic monitoring code No.	**D:05**		
Meter display	**Displays the intake air temperature.**		
Checking method	**Compare the actually measured intake air temperature with the meter display value.**		
	Item/components and probable cause	**Check or maintenance job**	**Sensor inspection procedure**
5	Intake air temperature sensor malfunction	Check in the diagnostic mode (Code No. 05). Sensor inspection procedure Refer to “CHECKING THE INTAKE AIR TEMPERATURE SENSOR” on page 8-126. During cold starting: A temperature close to the ambient temperature is indicated. Indication is incorrect. → Replace the intake air temperature sensor.	Place the main switch to the ON position, and check the fault code indication. No fault code indicated. → Recovered. Fault code indicated. → Check the next step.
6	ECU malfunction	Replace the ECU	

Fault code No.	**23**		
Symptom	**Open or short circuit of atmospheric pressure sensor lead**		
Fail-safe action	**Engine startup: Possible**		
	Riding: Possible		
Diagnostic monitoring code No.	**D:02**		
Meter display	**Displays the atmospheric pressure.**		
Checking method	**Compare the actually measured atmospheric pressure with the meter display value.**		
	Item/components and probable cause	**Check or maintenance job**	**Sensor inspection procedure**
1	Connection of atmospheric pressure sensor coupler Check the connection of the coupler is secure. Remove the coupler, and check each pin (for bending, wear, or locking).	Poor connection → Connect it securely, or replace the wire harness.	Place the main switch to the ON position, and check the fault code indication. No fault code indicated. → Recovered. Fault code indicated. → Check the next step.

Fault code No.	**23**
Symptom	**Open or short circuit of atmospheric pressure sensor lead**
Fail-safe action	**Engine startup: Possible**
	Riding: Possible
Diagnostic monitoring code No.	**D:02**
Meter display	**Displays the atmospheric pressure.**
Checking method	**Compare the actually measured atmospheric pressure with the meter display value.**

	Item/components and probable cause	Check or maintenance job	Sensor inspection procedure
2	Connection of main harness ECU coupler Check the connection of the coupler is secure. Remove the coupler and check each pin (for bending, wear, or locking).	Poor connection → Connect it securely, or replace the wire harness.	Place the main switch to the ON position, and check the fault code indication. No fault code indicated. → Recovered. Fault code indicated. → Check the next step.
3	Continuity of wire harness	Open or short circuit → Replace the wire harness. Black/Blue–Black/Blue Pink–Pink Blue–Blue	Place the main switch to the ON position, and check the fault code indication. No fault code indicated. → Recovered. Fault code indicated. → Check the next step.
4	Atmospheric pressure sensor malfunction	Check in the diagnostic mode (Code No. 02). Atmospheric pressure at the current altitude and weather conditions is indicated. 0 m above sea level: Approx. 101 kPa 1000 m above sea level: Approx. 90 kPa 2000 m above sea level: Approx. 80 kPa 3000 m above sea level: Approx. 70 kPa Incorrect indication → Sensor malfunction → Replace the atmospheric pressure sensor. Sensor inspection procedure Refer to “CHECKING THE ATMOSPHERIC PRESSURE SENSOR” on page 8-124.	Place the main switch to the ON position, and check the fault code indication. No fault code indicated. → Recovered. Fault code indicated. → Check the next step.
5	ECU malfunction	Replace the ECU.	

Fault code No.	**24**
Symptom	**The O_2 sensor does not operate.**
Fail-safe action	**Engine startup: Possible**
	Riding: Possible
Diagnostic monitoring code No.	**—**
Meter display	**—**
Checking method	**—**

	Item/components and probable cause	Check or maintenance job	Sensor inspection procedure
1	O_2 sensor installation status	Check the sensor for a loose mounting or a pinch	Either start and warm up the engine, and then racing it, or reset it with diagnostic code 63. No fault code indicated. → Recovered. Fault code indicated. → Check the next step.
2	Connection of O_2 sensor coupler Check the connection of the coupler is secure. Remove the coupler, and check each pin (for bending, wear, or locking).	Poor connection → Connect it securely, or repair/replace the wire harness.	Either start and warm up the engine, and then racing it, or reset it with diagnostic code 63. No fault code indicated. → Recovered. Fault code indicated. → Check the next step.
3	Connection of main harness ECU coupler Check the connection of the coupler is secure. Remove the coupler, and check each pin (for bending, wear, or locking).	Poor connection → Connect it securely, or repair/replace the wire harness.	Either start and warm up the engine, and then racing it, or reset it with diagnostic code 63. No fault code indicated. → Recovered. Fault code indicated. → Check the next step.
4	Continuity of wire harness	Open or short circuit → Connect it securely, or repair/replace the wire harness. Black/Blue–Black/Blue Pink/Black–Pink/Black Red/Blue–Red/Blue Gray/Green–Gray/Green	Either start and warm up the engine, and then racing it, or reset it with diagnostic code 63. No fault code indicated. → Recovered. Fault code indicated. → Check the next step.
5	Check the fuel pressure.	Refer to “CHECKING THE FUEL PRESSURE” on page 7-18.	Either start and warm up the engine, and then racing it, or reset it with diagnostic code 63. No fault code indicated. → Recovered. Fault code indicated. → Check the next step.

Fault code No.	**24**
Symptom	**The O_2 sensor does not operate.**
Fail-safe action	**Engine startup: Possible**
	Riding: Possible
Diagnostic monitoring code No.	**—**
Meter display	**—**
Checking method	**—**

	Item/components and probable cause	Check or maintenance job	Sensor inspection procedure
6	O_2 sensor malfunction	Check the O_2 sensor for an abnormality. Refer to "ENGINE REMOVAL" on page 5-3. O_2 sensor malfunction → Replace the O_2 sensor	Either start and warm up the engine, and then racing it, or reset it with diagnostic code 63. No fault code indicated. → Recovered. Fault code indicated. → Check the next step.
7	ECU malfunction	Replace the ECU.	

Fault code No.	**30**
Symptom	**Turnover of vehicle**
Fail-safe action	**Engine startup: Impossible**
	Riding: Impossible
Diagnostic monitoring code No.	**D:08**
Meter display	**Lean angle sensor** **• 0.4–1.4 (upright)** **• 3.7–4.4 (overturned)**
Checking method	**Remove the lean angle sensor and incline it more than 45 degrees.**

	Item/components and probable cause	Check or maintenance job	Sensor inspection procedure
1	Turnover of vehicle	Raise the vehicle to the upright position	Place the main switch to the ON position. (however, the engine cannot be restarted unless the main switch is first turned OFF) No fault code indicated. → Recovered. Fault code indicated. → Check the next step.
2	Sensor installation status	Check for a loose mounting, pinched mounting, or sensor mounting direction (up or down). Make sure that the mounting position is correct.	Place the main switch to the ON position. (however, the engine cannot be restarted unless the main switch is first turned OFF) No fault code indicated. → Recovered. Fault code indicated. → Check the next step.

Fault code No.	**30**
Symptom	**Turnover of vehicle**
Fail-safe action	**Engine startup: Impossible**
	Riding: Impossible
Diagnostic monitoring code No.	**D:08**
Meter display	**Lean angle sensor** **• 0.4–1.4 (upright)** **• 3.7–4.4 (overturned)**
Checking method	**Remove the lean angle sensor and incline it more than 45 degrees.**

	Item/components and probable cause	Check or maintenance job	Sensor inspection procedure
3	Lean angle sensor malfunction	Diagnostic mode (Code No. 08). Sensor inspection procedure Refer to “CHECKING THE LEAN ANGLE SENSOR” on page 8-117. In vertical position: 0.4–1.4 V When turned over: 3.7–4.4 V Indication is incorrect. → Replace the lean angle sensor.	Place the main switch to the ON position. (however, the engine cannot be restarted unless the main switch is first turned OFF) No fault code indicated. → Recovered. Fault code indicated. → Check the next step.
4	ECU malfunction	Replace the ECU.	

Fault code No.	**33**
Symptom	**Ignition coil #1 primary lead malfunction**
Fail-safe action	**Engine startup: Possible (depending on the number of failed cylinders)**
	Riding: Possible (depending on the number of failed cylinders)
Diagnostic monitoring code No.	**D:30**
Meter display	**Actuates the cylinder-#1 ignition coil five times at one-second intervals.** **Illuminates the engine trouble warning light.**
Checking method	**Check the spark five times.** **• Connect an ignition checker.**

	Item/components and probable cause	Check or maintenance job	Sensor inspection procedure
1	Connection of ignition coil coupler Check the connection of the coupler is secure. Remove the coupler, and check each pin (for bending, wear, or locking).	Poor connection → Connect it securely or replace the wire harness.	Start and idle the engine for approximately 5 seconds. Then, check the fault code indication. No fault code indicated. → Recovered. Fault code indicated. → Check the next step.

Fault code No.	**33**
Symptom	**Ignition coil #1 primary lead malfunction**
Fail-safe action	**Engine startup: Possible (depending on the number of failed cylinders)**
	Riding: Possible (depending on the number of failed cylinders)
Diagnostic monitoring code No.	**D:30**
Meter display	**Actuates the cylinder-#1 ignition coil five times at one-second intervals.** **Illuminates the engine trouble warning light.**
Checking method	**Check the spark five times.** **• Connect an ignition checker.**

	Item/components and probable cause	Check or maintenance job	Sensor inspection procedure
2	Connection of main harness ECU coupler Check the connection of the coupler is secure. Remove the coupler, and check each pin (for bending, wear, or locking).	Poor connection → Connect it securely or replace the wire harness.	Start and idle the engine for approximately 5 seconds. Then, check the fault code indication. No fault code indicated. → Recovered. Fault code indicated. → Check the next step.
3	Continuity of wire harness	Open or short circuit → Replace the wire harness. Orange–Orange	Start and idle the engine for approximately 5 seconds. Then, check the fault code indication. No fault code indicated. → Recovered. Fault code indicated. → Check the next step.
4	Ignition coil installation status	Check the mounting section for a loose or pinched mounting. Make sure that the mounting position is correct.	Start and idle the engine for approximately 5 seconds. Then, check the fault code indication. No fault code indicated. → Recovered. Fault code indicated. → Check the next step.
5	Ignition coil malfunction (Check the resistance of ignition coil #1.)	Refer to “CHECKING THE IGNITION COILS” on page 8-116. Ignition coil inspection method	Start and idle the engine for approximately 5 seconds. Then, check the fault code indication. No fault code indicated. → Recovered. Fault code indicated. → Check the next step.
6	ECU malfunction	Check in the diagnostic mode (Code No. 30). If not ignited, replace the defective ECU.	

Fault code No.	**34**
Symptom	**Ignition coil #2 primary lead malfunction**
Fail-safe action	**Engine startup: Possible (depending on the number of failed cylinders)**
	Riding: Possible (depending on the number of failed cylinders)
Diagnostic monitoring code No.	**D:31**
Meter display	**Actuates the cylinder-#2 ignition coil five times at one-second intervals.** **Illuminates the engine trouble warning light.**
Checking method	**Check the spark five times.** **• Connect an ignition checker.**

	Item/components and probable cause	Check or maintenance job	Sensor inspection procedure
1	Connection of ignition coil coupler Check the connection of the coupler is secure. Remove the coupler, and check each pin (for bending, wear, or locking).	Poor connection → Connect it securely or repair/replace the wire harness.	Start and idle the engine for approximately 5 seconds. Then, check the fault code indication. No fault code indicated. → Recovered. Fault code indicated. → Check the next step.
2	Connection of main harness ECU coupler Check the connection of the coupler is secure. Remove the coupler, and check each pin (for bending, wear, or locking).	Poor connection → Connect it securely or repair/replace the wire harness.	Start and idle the engine for approximately 5 seconds. Then, check the fault code indication. No fault code indicated. → Recovered. Fault code indicated. → Check the next step.
3	Continuity of wire harness	Open or short circuit → Replace the wire harness. Gray/Red–Gray/Red	Start and idle the engine for approximately 5 seconds. Then, check the fault code indication. No fault code indicated. → Recovered. Fault code indicated. → Check the next step.
4	Ignition coil installation status	Check the connection of the coupler is secure. Make sure that the mounting position is correct.	Start and idle the engine for approximately 5 seconds. Then, check the fault code indication. No fault code indicated. → Recovered. Fault code indicated. → Check the next step.

Fault code No.	**34**
Symptom	**Ignition coil #2 primary lead malfunction**
Fail-safe action	**Engine startup: Possible (depending on the number of failed cylinders)**
	Riding: Possible (depending on the number of failed cylinders)
Diagnostic monitoring code No.	**D:31**
Meter display	**Actuates the cylinder-#2 ignition coil five times at one-second intervals.** **Illuminates the engine trouble warning light.**
Checking method	**Check the spark five times.** **• Connect an ignition checker.**

	Item/components and probable cause	Check or maintenance job	Sensor inspection procedure
5	Ignition coil malfunction (Check the resistance of ignition coil #2.)	Refer to “CHECKING THE IGNITION COILS” on page 8-116. Ignition coil inspection method	Start and idle the engine for approximately 5 seconds. Then, check the fault code indication. No fault code indicated. → Recovered. Fault code indicated. → Check the next step.
6	ECU malfunction	Check in the diagnostic mode (Code No. 31). If not ignited, replace the defective ECU.	

Fault code No.	**35**
Symptom	**Ignition coil #3 primary lead malfunction**
Fail-safe action	**Engine startup: Possible (depending on the number of failed cylinders)**
	Riding: Possible (depending on the number of failed cylinders)
Diagnostic monitoring code No.	**D:32**
Meter display	**Actuates the cylinder-#3 ignition coil five times at one-second intervals.** **Illuminates the engine trouble warning light.**
Checking method	**Check the spark five times.** **• Connect an ignition checker.**

	Item/components and probable cause	Check or maintenance job	Sensor inspection procedure
1	Connection of ignition coil coupler Check the connection of the coupler is secure. Remove the coupler, and check each pin (for bending, wear, or locking).	Poor connection → Connect it securely or replace the wire harness.	Start and idle the engine for approximately 5 seconds. Then, check the fault code indication. No fault code indicated. → Recovered. Fault code indicated. → Check the next step.

Fault code No.	**35**
Symptom	**Ignition coil #3 primary lead malfunction**
Fail-safe action	**Engine startup: Possible (depending on the number of failed cylinders)**
	Riding: Possible (depending on the number of failed cylinders)
Diagnostic monitoring code No.	**D:32**
Meter display	**Actuates the cylinder-#3 ignition coil five times at one-second intervals.** **Illuminates the engine trouble warning light.**
Checking method	**Check the spark five times.** **• Connect an ignition checker.**

	Item/components and probable cause	Check or maintenance job	Sensor inspection procedure
2	Connection of main harness ECU coupler Check the connection of the coupler is secure. Remove the coupler, and check each pin (for bending, wear, or locking).	Poor connection → Connect it securely or replace the wire harness.	Start and idle the engine for approximately 5 seconds. Then, check the fault code indication. No fault code indicated. → Recovered. Fault code indicated. → Check the next step.
3	Continuity of wire harness	Open or short circuit → Replace the wire harness. Orange/Green–Orange/Green	Start and idle the engine for approximately 5 seconds. Then, check the fault code indication. No fault code indicated. → Recovered. Fault code indicated. → Check the next step.
4	Ignition coil installation status	Check the mounting section for a loose or pinched mounting. Make sure that the mounting position is correct.	Start and idle the engine for approximately 5 seconds. Then, check the fault code indication. No fault code indicated. → Recovered. Fault code indicated. → Check the next step.
5	Ignition coil malfunction (Check the resistance of ignition coil #3.)	Refer to “CHECKING THE IGNITION COILS” on page 8-116. Ignition coil inspection method	Start and idle the engine for approximately 5 seconds. Then, check the fault code indication. No fault code indicated. → Recovered. Fault code indicated. → Check the next step.
6	ECU malfunction	Check in the diagnostic mode (Code No. 32). If not ignited, replace the defective ECU.	

Fault code No.	**36**
Symptom	**Ignition coil #4 primary lead malfunction**
Fail-safe action	**Engine startup: Possible (depending on the number of failed cylinders)**
	Riding: Possible (depending on the number of failed cylinders)
Diagnostic monitoring code No.	**D:33**
Meter display	**Actuates the cylinder-#4 ignition coil five times at one-second intervals.** **Illuminates the engine trouble warning light.**
Checking method	**Check the spark five times.** **• Connect an ignition checker.**

	Item/components and probable cause	Check or maintenance job	Sensor inspection procedure
1	Connection of ignition coil coupler Check the connection of the coupler is secure. Remove the coupler, and check each pin (for bending, wear, or locking).	Poor connection → Connect it securely or repair/replace the wire harness.	Start and idle the engine for approximately 5 seconds. Then, check the fault code indication. No fault code indicated. → Recovered. Fault code indicated. → Check the next step.
2	Connection of main harness ECU coupler Check the connection of the coupler is secure. Remove the coupler, and check each pin (for bending, wear, or locking).	Poor connection → Connect it securely or repair/replace the wire harness.	Start and idle the engine for approximately 5 seconds. Then, check the fault code indication. No fault code indicated. → Recovered. Fault code indicated. → Check the next step.
3	Continuity of wire harness	Open or short circuit → Replace the wire harness. Gray/Green–Gray/Green	Start and idle the engine for approximately 5 seconds. Then, check the fault code indication. No fault code indicated. → Recovered. Fault code indicated. → Check the next step.
4	Ignition coil installation status	Check the connection of the coupler is secure. Make sure that the mounting position is correct.	Start and idle the engine for approximately 5 seconds. Then, check the fault code indication. No fault code indicated. → Recovered. Fault code indicated. → Check the next step.

Fault code No.	**36**
Symptom	**Ignition coil #4 primary lead malfunction**
Fail-safe action	**Engine startup: Possible (depending on the number of failed cylinders)**
	Riding: Possible (depending on the number of failed cylinders)
Diagnostic monitoring code No.	**D:33**
Meter display	**Actuates the cylinder-#4 ignition coil five times at one-second intervals.** **Illuminates the engine trouble warning light.**
Checking method	**Check the spark five times.** **• Connect an ignition checker.**

	Item/components and probable cause	Check or maintenance job	Sensor inspection procedure
5	Ignition coil malfunction (Check the resistance of ignition coil #4.)	Refer to “CHECKING THE IGNITION COILS” on page 8-116. Ignition coil inspection method	Start and idle the engine for approximately 5 seconds. Then, check the fault code indication. No fault code indicated. → Recovered. Fault code indicated. → Check the next step.
6	ECU malfunction	Check in the diagnostic mode (Code No. 33). If not ignited, replace the defective ECU.	

Fault code No.		**39**
Symptom		**Open or short circuit of primary injector lead**
Fail-safe action		**Engine startup: Possible (depending on the number of failed cylinders)**
		Riding: Possible (depending on the number of failed cylinders)
Diagnostic monitoring code No.		**D:36** **D:37** **D:38** **D:39**
D:36	**Actuator operation**	**Actuates the primary injector #1 five times at one-second intervals. Illuminates the engine trouble warning light.**
	Checking method	**Check the operating sound of the primary injector #1 five times.**
D:37	**Actuator operation**	**Actuates the primary injector #2 five times at one-second intervals. Illuminates the engine trouble warning light.**
	Checking method	**Check the operating sound of the primary injector #2 five times.**
D:38	**Actuator operation**	**Actuates the primary injector #3 five times at one-second intervals. Illuminates the engine trouble warning light.**
	Checking method	**Check the operating sound of the primary injector #3 five times.**
D:39	**Actuator operation**	**Actuates the primary injector #4 five times at one-second intervals. Illuminates the engine trouble warning light.**
	Checking method	**Check the operating sound of the primary injector #4 five times.**

	Item/components and probable cause	Check or maintenance job	Sensor inspection procedure
1	Locate the malfunction	Check in the diagnostic mode (Code No. 36, 37, 38, 39). Refer to “CHECKING THE FUEL INJECTORS” on page 8-128.	—
2	Connection of primary injector coupler Check the connection of the coupler is secure. Remove the coupler, and check each pin (for bending, wear, or locking).	Poor connection → Connect it securely, or repair/replace the wire harness.	Place the main switch to the ON position, and check the fault code indication. No fault code indicated. → Recovered. Fault code indicated. → Check the next step.
3	Primary injector malfunction	Refer to “CHECKING THE FUEL INJECTORS” on page 8-128. Fuel injection inspection method.	Place the main switch to the ON position, and check the fault code indication. No fault code indicated. → Recovered. Fault code indicated. → Check the next step.

Fault code No.		**39**
Symptom		**Open or short circuit of primary injector lead**
Fail-safe action		**Engine startup: Possible (depending on the number of failed cylinders)**
		Riding: Possible (depending on the number of failed cylinders)
Diagnostic monitoring code No.		**D:36** **D:37** **D:38** **D:39**
D:36	**Actuator operation**	**Actuates the primary injector #1 five times at one-second intervals. Illuminates the engine trouble warning light.**
	Checking method	**Check the operating sound of the primary injector #1 five times.**
D:37	**Actuator operation**	**Actuates the primary injector #2 five times at one-second intervals. Illuminates the engine trouble warning light.**
	Checking method	**Check the operating sound of the primary injector #2 five times.**
D:38	**Actuator operation**	**Actuates the primary injector #3 five times at one-second intervals. Illuminates the engine trouble warning light.**
	Checking method	**Check the operating sound of the primary injector #3 five times.**
D:39	**Actuator operation**	**Actuates the primary injector #4 five times at one-second intervals. Illuminates the engine trouble warning light.**
	Checking method	**Check the operating sound of the primary injector #4 five times.**

	Item/components and probable cause	Check or maintenance job	Sensor inspection procedure
4	Connection of main harness ECU coupler Check the connection of the coupler is secure. Remove the coupler and check each pin (for bending, wear, or locking).	Poor connection → Connect it securely, or repair/replace the wire harness.	Place the main switch to the ON position, and check the fault code indication. No fault code indicated. → Recovered. Fault code indicated. → Check the next step.
5	Connection of sub-wire harness Check the connection of the coupler is secure. Remove the coupler, and check each pin (for bending, wear, or locking)	Poor connection → Connect it securely, or repair/replace the wire harness.	Place the main switch to the ON position, and check the fault code indication. No fault code indicated. → Recovered. Fault code indicated. → Check the next step.

Fault code No.		**39**
Symptom		**Open or short circuit of primary injector lead**
Fail-safe action		**Engine startup: Possible (depending on the number of failed cylinders)**
		Riding: Possible (depending on the number of failed cylinders)
Diagnostic monitoring code No.		**D:36** **D:37** **D:38** **D:39**
D:36	**Actuator operation**	**Actuates the primary injector #1 five times at one-second intervals. Illuminates the engine trouble warning light.**
	Checking method	**Check the operating sound of the primary injector #1 five times.**
D:37	**Actuator operation**	**Actuates the primary injector #2 five times at one-second intervals. Illuminates the engine trouble warning light.**
	Checking method	**Check the operating sound of the primary injector #2 five times.**
D:38	**Actuator operation**	**Actuates the primary injector #3 five times at one-second intervals. Illuminates the engine trouble warning light.**
	Checking method	**Check the operating sound of the primary injector #3 five times.**
D:39	**Actuator operation**	**Actuates the primary injector #4 five times at one-second intervals. Illuminates the engine trouble warning light.**
	Checking method	**Check the operating sound of the primary injector #4 five times.**

	Item/components and probable cause	Check or maintenance job	Sensor inspection procedure
6	Continuity of wire harness	Open or short circuit → Replace the wire harness. Primary injector #1 Red/Blue–Red/Blue Red/Black–Red/Black Primary injector #2 Red/Blue–Red/Blue Green/Black–Green/Black Primary injector #3 Red/Blue–Red/Blue Blue/Black–Blue/Black Primary injector #4 Red/Blue–Red/Blue Orange/Black–Orange/Black	Place the main switch to the ON position, and check the fault code indication. No fault code indicated. → Recovered. Fault code indicated. → Check the next step.
7	ECU malfunction	Replace the ECU.	

Fault code No.		**40**
Symptom		**Open or short circuit of secondary injector lead**
Fail-safe action		**Engine startup: Possible (depending on the number of failed cylinders)**
		Riding: Possible (depending on the number of failed cylinders)
Diagnostic monitoring code No.		**D:40** **D:41** **D:42** **D:43**
D:40	**Actuator operation**	**Actuates the secondary injector #1 five times at one-second intervals.** **Illuminates the engine trouble warning light.**
	Checking method	**Check the operating sound of the secondary injector #1 five times.**
D:41	**Actuator operation**	**Actuates the secondary injector #2 five times at one-second intervals.** **Illuminates the engine trouble warning light.**
	Checking method	**Check the operating sound of the secondary injector #2 five times.**
D:42	**Actuator operation**	**Actuates the secondary injector #3 five times at one-second intervals.** **Illuminates the engine trouble warning light.**
	Checking method	**Check the operating sound of the secondary injector #3 five times.**
D:43	**Actuator operation**	**Actuates the secondary injector #4 five times at one-second intervals.** **Illuminates the engine trouble warning light.**
	Checking method	**Check the operating sound of the secondary injector #4 five times.**

	Item/components and probable cause	**Check or maintenance job**	**Sensor inspection procedure**
1	Locate the malfunction	Check in the diagnostic mode (Code No. 40, 41, 42, 43). Refer to “CHECKING THE FUEL INJECTORS” on page 8-128.	—
2	Connection of secondary injector coupler Check the connection of the coupler is secure. Remove the coupler, and check each pin (for bending, wear, or locking).	Poor connection → Connect it securely, or repair/replace the wire harness.	Check the injector’s operating noise by the diagnostic mode (Code No.40–43). Injector’s operating noise → Reset with the diagnostic code 63. Recovered. No injector’s operating noise → Check the next step.

Fault code No.		**40**
Symptom		**Open or short circuit of secondary injector lead**
Fail-safe action		**Engine startup: Possible (depending on the number of failed cylinders)**
		Riding: Possible (depending on the number of failed cylinders)
Diagnostic monitoring code No.		**D:40** **D:41** **D:42** **D:43**
D:40	**Actuator operation**	**Actuates the secondary injector #1 five times at one-second intervals.** **Illuminates the engine trouble warning light.**
	Checking method	**Check the operating sound of the secondary injector #1 five times.**
D:41	**Actuator operation**	**Actuates the secondary injector #2 five times at one-second intervals.** **Illuminates the engine trouble warning light.**
	Checking method	**Check the operating sound of the secondary injector #2 five times.**
D:42	**Actuator operation**	**Actuates the secondary injector #3 five times at one-second intervals.** **Illuminates the engine trouble warning light.**
	Checking method	**Check the operating sound of the secondary injector #3 five times.**
D:43	**Actuator operation**	**Actuates the secondary injector #4 five times at one-second intervals.** **Illuminates the engine trouble warning light.**
	Checking method	**Check the operating sound of the secondary injector #4 five times.**

	Item/components and probable cause	Check or maintenance job	Sensor inspection procedure
3	Secondary injector malfunction	Refer to “CHECKING THE FUEL INJECTORS” on page 8-128. Fuel injection inspection method.	Check the injector’s operating noise by the diagnostic mode (Code No.40–43). Injector’s operating noise → Reset with the diagnostic code 63. Recovered. No injector’s operating noise → Check the next step.
4	Connection of main harness ECU coupler Check the connection of the coupler is secure. Remove the coupler and check each pin (for bending, wear, or locking).	Poor connection → Connect it securely, or repair/replace the wire harness.	Check the injector’s operating noise by the diagnostic mode (Code No.40–43). Injector’s operating noise → Reset with the diagnostic code 63. Recovered. No injector’s operating noise → Check the next step.

Fault code No.		**40**
Symptom		**Open or short circuit of secondary injector lead**
Fail-safe action		**Engine startup: Possible (depending on the number of failed cylinders)**
		Riding: Possible (depending on the number of failed cylinders)
Diagnostic monitoring code No.		**D:40** **D:41** **D:42** **D:43**
D:40	**Actuator operation**	**Actuates the secondary injector #1 five times at one-second intervals.** **Illuminates the engine trouble warning light.**
	Checking method	**Check the operating sound of the secondary injector #1 five times.**
D:41	**Actuator operation**	**Actuates the secondary injector #2 five times at one-second intervals.** **Illuminates the engine trouble warning light.**
	Checking method	**Check the operating sound of the secondary injector #2 five times.**
D:42	**Actuator operation**	**Actuates the secondary injector #3 five times at one-second intervals.** **Illuminates the engine trouble warning light.**
	Checking method	**Check the operating sound of the secondary injector #3 five times.**
D:43	**Actuator operation**	**Actuates the secondary injector #4 five times at one-second intervals.** **Illuminates the engine trouble warning light.**
	Checking method	**Check the operating sound of the secondary injector #4 five times.**

	Item/components and probable cause	**Check or maintenance job**	**Sensor inspection procedure**
5	Connection of sub-wire harness Check the connection of the coupler is secure. Remove the coupler, and check each pin (for bending, wear, or locking)	Poor connection → Connect it securely, or repair/replace the wire harness.	Check the injector's operating noise by the diagnostic mode (Code No.40–43). Injector's operating noise → Reset with the diagnostic code 63. Recovered. No injector's operating noise → Check the next step.

Fault code No.		**40**
Symptom		**Open or short circuit of secondary injector lead**
Fail-safe action		**Engine startup: Possible (depending on the number of failed cylinders)**
		Riding: Possible (depending on the number of failed cylinders)
Diagnostic monitoring code No.		**D:40** **D:41** **D:42** **D:43**
D:40	**Actuator operation**	**Actuates the secondary injector #1 five times at one-second intervals.** **Illuminates the engine trouble warning light.**
	Checking method	**Check the operating sound of the secondary injector #1 five times.**
D:41	**Actuator operation**	**Actuates the secondary injector #2 five times at one-second intervals.** **Illuminates the engine trouble warning light.**
	Checking method	**Check the operating sound of the secondary injector #2 five times.**
D:42	**Actuator operation**	**Actuates the secondary injector #3 five times at one-second intervals.** **Illuminates the engine trouble warning light.**
	Checking method	**Check the operating sound of the secondary injector #3 five times.**
D:43	**Actuator operation**	**Actuates the secondary injector #4 five times at one-second intervals.** **Illuminates the engine trouble warning light.**
	Checking method	**Check the operating sound of the secondary injector #4 five times.**

	Item/components and probable cause	**Check or maintenance job**	**Sensor inspection procedure**
6	Continuity of wire harness	Open or short circuit → Replace the wire harness. Secondary injector #1 Red/Blue–Red/Blue White/Blue–White/Blue Secondary injector #2 Red/Blue–Red/Blue Sky blue/White–Sky blue/White Secondary injector #3 Red/Blue–Red/Blue Brown/Yellow–Brown/Yellow Secondary injector #4 Red/Blue–Red/Blue Brown/Black–Brown/Black	Check the injector's operating noise by the diagnostic mode (Code No.40–43). Injector's operating noise → Reset with the diagnostic code 63. Recovered. No injector's operating noise → Check the next step.
7	ECU malfunction	Replace the ECU.	

Fault code No.	**41**
Symptom	**Open or short circuit of lean angle sensor lead**
Fail-safe action	**Engine startup: Impossible**
	Riding: Impossible
Diagnostic monitoring code No.	**D:08**
Meter display	**Lean angle sensor** **• 0.4–1.4 (upright)** **• 3.7–4.4 (overturned)**
Checking method	**Remove the lean angle sensor and incline more than 45 degrees.**

	Item/components and probable cause	Check or maintenance job	Sensor inspection procedure
1	Connection of lean angle sensor coupler Check the connection of the coupler is secure. Remove the coupler, and check each pin (for bending, wear, or locking).	Poor connection → Connect it securely, or repair/replace the wire harness.	Rotate the main switch to the OFF position first, and then rotate it to the ON position again. Then, check the fault code indication. No fault code indicated. → Recovered. Fault code indicated. → Check the next step.
2	Connection of main harness ECU coupler Check the connection of the coupler is secure. Remove the coupler, and check each pin (for bending, wear, or locking).	Poor connection → Connect it securely, or repair/replace the harness.	Rotate the main switch to the OFF position first, and then rotate it to the ON position again. Then, check the fault code indication. No fault code indicated. → Recovered. Fault code indicated. → Check the next step.
3	Continuity of wire harness	Open or short circuit → Replace the wire harness. Black/Blue–Black/Blue Yellow/Green–Yellow/Green Blue–Blue	Rotate the main switch to the OFF position first, and then rotate it to the ON position again. Then, check the fault code indication. No fault code indicated. → Recovered. Fault code indicated. → Check the next step.

Fault code No.	**41**
Symptom	**Open or short circuit of lean angle sensor lead**
Fail-safe action	**Engine startup: Impossible**
	Riding: Impossible
Diagnostic monitoring code No.	**D:08**
Meter display	**Lean angle sensor** **• 0.4–1.4 (upright)** **• 3.7–4.4 (overturned)**
Checking method	**Remove the lean angle sensor and incline more than 45 degrees.**

	Item/components and probable cause	Check or maintenance job	Sensor inspection procedure
4	Lean angle sensor malfunction	Refer to “CHECKING THE LEAN ANGLE SENSOR” on page 8-117.	Rotate the main switch to the OFF position first, and then rotate it to the ON position again. Then, check the fault code indication. No fault code indicated. → Recovered. Fault code indicated. → Check the next step.
5	ECU malfunction	Replace the ECU.	

Fault code No.		**42**
Symptom		**A. Normal signals are not received from the speed sensor.**
		B. Open or short circuit of gear position sensor lead
A	**Fail-safe action**	**Engine startup: Possible**
		Riding: Possible
	Diagnostic monitoring code No.	**D:07 (Speed sensor)**
	Meter display	**Vehicle speed pulses: 0–999**
	Checking method	**Make sure that the indication value increases when the rotation speed of the rear wheel increases. This value is cumulative and is not reset each time the wheel is prevented from rotating.**
B	**Fail-safe action**	**Engine startup: Possible**
		Riding: Possible
	Diagnostic monitoring code No.	**D:21 (Gear position sensor)**
	Meter display	**Gear position switch** **• ON (neutral)** **• OFF (in gear)**
	Checking method	**Shift the transmission.**

	Checkpoints	**Inspection method**
	Locate the malfunction.	Check in the diagnostic mode (Code No. 07). Rotate the rear wheel and make sure that the indication value increases. Malfunction → Go to the “Speed sensor system malfunction” section below. Check in the diagnostic mode (Code No. 21). When the gear is in neutral position: ON indication When the gear is not in neutral position: OFF indication Malfunction → Go to the “Gear position sensor system malfunction” section below.

A. Speed sensor system malfunction

	Item/components and probable cause	Check or maintenance job	Sensor inspection procedure
1	Connection of speed sensor (meter) coupler Check the connection of the coupler is secure. Remove the coupler, and check each pin (for bending, wear, or locking).	Poor connection → Connect it securely, or repair/replace the wire harness.	Start the engine, and check the connection of the coupler is secure. Ride on the vehicle at a low speed (approx. 20–30 km/h). Then, check the fault code indication. No fault code indicated. → Recovered. Fault code indicated. → Check the next step.
2	Connection of main harness ECU coupler Check the connection of the coupler is secure. Remove the coupler, and check each pin (for bending, wear, or locking).	Poor connection → Connect it securely, or repair/replace the wire harness.	Start the engine, and check the connection of the coupler is secure. Ride on the vehicle at a low speed (approx. 20–30 km/h). Then, check the fault code indication. No fault code indicated. → Recovered. Fault code indicated. → Check the next step.
3	Continuity of wire harness	Open or short circuit → Replace the wire harness. Black/Blue–Black/Blue Blue–Blue White/Yellow–White/Yellow	Start the engine, and check the connection of the coupler is secure. Ride on the vehicle at a low speed (approx. 20–30 km/h). Then, check the fault code indication. No fault code indicated. → Recovered. Fault code indicated. → Check the next step.
4	Speed sensor malfunction Refer to “CHECKING THE SPEED SENSOR” on page 8-121.	Replace the speed sensor.	Start the engine, and check the connection of the coupler is secure. Ride on the vehicle at a low speed (approx. 20–30 km/h). Then, check the fault code indication. No fault code indicated. → Recovered. Fault code indicated. → Check the next step.
5	ECU malfunction	Replace the ECU.	

B. Gear position sensor system malfunction

	Item/components and probable cause	Check or maintenance job	Sensor inspection procedure
1	Connection of gear position sensor coupler Check the connection of the coupler is secure. Remove the coupler, and check each pin (for bending, wear, or locking).	Poor connection → Reconnect or repair the coupler.	Start the engine, and check the secure connection of the coupler. Ride the vehicle at a low speed (approx. 20–30 km/h). Then, check the fault code indication. No fault code indicated. → Recovered. Fault code indicated. → Check the next step.
2	Connection of wire harness ECU coupler Check the connection of the coupler is secure. Remove the coupler, and check each pin (for bending, wear, or locking).	Poor connection → Reconnect or repair the coupler.	Start the engine, and check the secure connection of the coupler. Ride the vehicle at a low speed (approx. 20–30 km/h). Then, check the fault code indication. No fault code indicated. → Recovered. Fault code indicated. → Check the next step.
3	Continuity of leads between gear position sensor and relay unit coupler	Open short circuit → Replace the wire harness. Sky blue–Sky blue	Start the engine, and check the secure connection of the coupler. Ride the vehicle at a low speed (approx. 20–30 km/h). Then, check the fault code indication. No fault code indicated. → Recovered. Fault code indicated. → Check the next step.
4	Gear position sensor malfunction Refer to “CHECKING THE GEAR POSITION SENSOR” on page 8-127.	Replace the gear position sensor.	Start the engine, and check the secure connection of the coupler. Ride the vehicle at a low speed (approx. 20–30 km/h). Then, check the fault code indication. No fault code indicated. → Recovered. Fault code indicated. → Check the next step.

	Item/components and probable cause	Check or maintenance job	Sensor inspection procedure
5	Shift drum (that detects the neutral position) malfunction	Check the gear shift drum (that detects the neutral position). Refer to "CHECKING THE SHIFT DRUM ASSEMBLY" on page 5-96. Malfunction → Replace the shift drum.	Start the engine, and check the secure connection of the coupler. Ride the vehicle at a low speed (approx. 20–30 km/h). Then, check the fault code indication. No fault code indicated. → Recovered. Fault code indicated. → Check the next step.
6	ECU malfunction	Replace the ECU.	

Fault code No.	**43**		
Symptom	**Incorrect voltage supplied to the fuel injector and fuel pump**		
Fail-safe action	**Engine startup: Possible**		
	Riding: Possible		
Diagnostic monitoring code No.	**D:50**		
Meter display	**Approximately 12.0**		
Checking method	**Set the engine stop switch to "∩", and then compare with the actually measured battery voltage. (If the battery voltage is lower, perform recharging.)**		
	Item/components and probable cause	**Check or maintenance job**	**Sensor inspection procedure**
1	Connection of relay unit coupler Check the connection of the coupler is secure. Remove the coupler, and check each pin (for bending, wear, or locking).	Poor connection → Connect it securely, or repair/replace the wire harness.	Start and idle the engine for approximately 30 seconds. Then, check the fault code indication. No fault indicated. → Recovered. Fault code indicated. → Check the next step.
2	Connection of main harness ECU coupler Check the connection of the coupler is secure. Remove the coupler, and check each pin (for bending, wear, or locking).	Poor connection → Connect it securely, or repair/replace the wire harness.	Start and idle the engine for approximately 30 seconds. Then, check the fault code indication. No fault indicated. → Recovered. Fault code indicated. → Check the next step.
3	Continuity of wire harness between the battery, relay unit, ECU and fuel injectors coupler	Open or short circuit → Replace the wire harness. Red–Red Red/Blue–Red/Blue	Start and idle the engine for approximately 30 seconds. Then, check the fault code indication. No fault code indicated. → Recovered. Fault code indicated. → Check the next step.

Fault code No.	**43**
Symptom	**Incorrect voltage supplied to the fuel injector and fuel pump**
Fail-safe action	**Engine startup: Possible**
	Riding: Possible
Diagnostic monitoring code No.	**D:50**
Meter display	**Approximately 12.0**
Checking method	**Set the engine stop switch to "○", and then compare with the actually measured battery voltage. (If the battery voltage is lower, perform recharging.)**

	Item/components and probable cause	Check or maintenance job	Sensor inspection procedure
4	Fuel injection system relay malfunction	Check in the diagnostic mode (Code No. 50). No operation sound of fuel injection system relay is heard. → Replace the relay unit.	Start and idle the engine for approximately 30 seconds. Then, check the fault code indication. No fault code indicated. → Recovered. Fault code indicated. → Check the next step.
5	ECU malfunction	Replace the ECU.	

Fault code No.	**44**
Symptom	**An error is detected while reading or writing on EEP-ROM**
Fail-safe action	**Engine startup: Under certain conditions**
	Riding: Under certain conditions
Diagnostic monitoring code No.	**D:60**
Meter display	**The in self diagnostic code 44 detected EEP-ROM errors are indicated.** **If there are multiple errors, they are indicated in 2 seconds intervals** **00 indication: Normal status** **01 indication: CO concentration adjusted for cylinder #1** **02 indication: CO concentration adjusted for cylinder #2** **03 indication: CO concentration adjusted for cylinder #3** **04 indication: CO concentration adjusted for cylinder #4**
Checking method	**—**

	Item/components and probable cause	Check or maintenance job	Sensor inspection procedure
1	Locate the malfunction.	Diagnostic mode (Code No. 60) 00 indication Normal status 01 indication: CO concentration adjusted for cylinder #1 02 indication: CO concentration adjusted for cylinder #2 03 indication: CO concentration adjusted for cylinder #3 04 indication: CO concentration adjusted for cylinder #4	—

Fault code No.	**44**
Symptom	**An error is detected while reading or writing on EEP-ROM**
Fail-safe action	**Engine startup: Under certain conditions**
	Riding: Under certain conditions
Diagnostic monitoring code No.	**D:60**
Meter display	**The in self diagnostic code 44 detected EEP-ROM errors are indicated.** **If there are multiple errors, they are indicated in 2 seconds intervals** **00 indication: Normal status** **01 indication: CO concentration adjusted for cylinder #1** **02 indication: CO concentration adjusted for cylinder #2** **03 indication: CO concentration adjusted for cylinder #3** **04 indication: CO concentration adjusted for cylinder #4**
Checking method	**—**

	Item/components and probable cause	Check or maintenance job	Sensor inspection procedure
2	"01" is indicated in Diagnostic mode (Code No. 60) EEP-ROM data error for adjustment of CO concentration of cylinder #1	Change the CO concentration of cylinder #1, and rewrite in EEP-ROM. After this adjustment is made, the memory is not recovered when the main switch is turned OFF and ON again. → Replace the ECU.	Place the main switch to the ON position. Then, check the fault code indication. No fault code indicated. → Recovered. Fault code indicated. → Check the next step.
3	"02" is indicated in Diagnostic mode (Code No. 60) EEP-ROM data error for adjustment of CO concentration of cylinder #2	Change the CO concentration of cylinder #2, and rewrite in EEP-ROM. After this adjustment is made, the memory is not recovered when the main switch is turned OFF and ON again. → Replace the ECU.	Place the main switch to the ON position. Then, check the fault code indication. No fault code indicated. → Recovered. Fault code indicated. → Check the next step.
4	"03" is indicated in Diagnostic mode (Code No. 60) EEP-ROM data error for adjustment of CO concentration of cylinder #3	Change the CO concentration of cylinder #3, and rewrite in EEP-ROM. After this adjustment is made, the memory is not recovered when the main switch is turned OFF and ON again. → Replace the ECU.	Place the main switch to the ON position. Then, check the fault code indication. No fault code indicated. → Recovered. Fault code indicated. → Check the next step.
5	"04" is indicated in Diagnostic mode (Code No. 60) EEP-ROM data error for adjustment of CO concentration of cylinder #4	Change the CO concentration of cylinder #4, and rewrite in EEP-ROM. After this adjustment is made, the memory is not recovered when the main switch is turned OFF and ON again. → Replace the ECU.	Place the main switch to the ON position. Then, check the fault code indication. No fault code indicated. → Recovered. Fault code indicated. → Check the next step.
6	ECU malfunction	Replace the ECU	

Fault code No.	**46**
Symptom	**Incorrect voltage is supplied to the ECU.**
Fail-safe action	**Engine startup: Possible**
	Riding: Possible
Diagnostic monitoring code No.	**—**
Meter display	**—**
Checking method	**—**

	Item/components and probable cause	Check or maintenance job	Sensor inspection procedure
1	Connection of ECU coupler Check the connection of the coupler is secure. Remove the coupler, and check each pin (for bending, wear, or locking).	Poor connection → Connect it securely, or repair/replace the wire harness.	Start and idle the engine for approximately 5 seconds. Then, check the fault code indication. No fault code indicated. → Recovered. Fault code indicated. → Check the next step.
2	Continuity of wire harness	Open or short circuit → Replace the wire harness. Between the battery and main switch Red–Red Between the main switch and ignition fuse Brown/Blue–Brown/Blue Between the ignition fuse and ECU Red/White–Red/White	Start and idle the engine for approximately 5 seconds. Then, check the fault code indication. No fault code indicated. → Recovered. Fault code indicated. → Check the next step.
3	Battery malfunction	Check the battery voltage. Refer to “CHECKING AND CHARGING THE BATTERY” on page 8-109. Battery malfunction → Recharge or replace the battery.	Start and idle the engine for approximately 5 seconds. Then, check the fault code indication. No fault code indicated. → Recovered. Fault code indicated. → Check the next step.
4	Stator coil malfunction	Check the stator coil output. Refer to “CHECKING THE STATOR COIL” on page 8-118. Stator coil malfunction → Replace the stator coil.	Start and idle the engine for approximately 5 seconds. Then, check the fault code indication. No fault code indicated. → Recovered. Fault code indicated. → Check the next step.
5	ECU malfunction	Replace the ECU.	

Fault code No.	**50**		
Symptom	**ECU memory malfunction**		
Fail-safe action	**Engine startup: Under certain conditions**		
	Riding: Under certain conditions		
Diagnostic monitoring code No.	**—**		
Meter display	**—**		
Checking method	**—**		
	Item/components and probable cause	**Check or maintenance job**	**Sensor inspection procedure**
1	ECU malfunction	Replace the ECU.	Place the main switch to the ON position. Then, check that no fault code indicated.

Fault code No.	**59**		
Symptom	**Open or short circuit of accelerator position sensor lead**		
Fail-safe action	**Engine startup: Possible under certain conditions**		
	Riding: Possible under certain conditions		
Diagnostic monitoring code No.	**D:14** **D:15**		
D:14	**Meter display**	**Accelerator position sensor signal 1** **• 12–22 (fully closed position)** **• 97–107 (fully opened position)**	
	Checking method	**• Check with throttle grip fully closed.** **• Check with throttle grip fully open.**	
D:15	**Meter display**	**Accelerator position sensor signal 2** **• 10–24 (fully closed position)** **• 95–109 (fully opened position)**	
	Checking method	**• Check with throttle grip fully closed.** **• Check with throttle grip fully open.**	
	Item/components and probable cause	**Check or maintenance job**	**Sensor inspection procedure**
1	Connection of accelerator position sensor coupler Check the connection of the coupler is secure. Remove the coupler, and check each pin (for bending, wear, or locking).	Poor connection → Connect it securely, or repair/replace the wire harness.	Place the main switch to the ON position, and check the fault code indication. No fault code indicated. → Recovered. Fault code indicated. → Check the next step.
2	Connection of main harness ECU coupler Check the connection of the coupler is secure. Remove the coupler, and check each pin (for bending, wear, or locking).	Poor connection → Connect it securely, or repair/replace the wire harness.	Place the main switch to the ON position, and check the fault code indication. No fault code indicated. → Recovered. Fault code indicated. → Check the next step.

Fault code No.		**59**
Symptom		**Open or short circuit of accelerator position sensor lead**
Fail-safe action		**Engine startup: Possible under certain conditions**
		Riding: Possible under certain conditions
Diagnostic monitoring code No.		**D:14** **D:15**
D:14	**Meter display**	**Accelerator position sensor signal 1** **• 12–22 (fully closed position)** **• 97–107 (fully opened position)**
	Checking method	**• Check with throttle grip fully closed.** **• Check with throttle grip fully open.**
D:15	**Meter display**	**Accelerator position sensor signal 2** **• 10–24 (fully closed position)** **• 95–109 (fully opened position)**
	Checking method	**• Check with throttle grip fully closed.** **• Check with throttle grip fully open.**

	Item/components and probable cause	**Check or maintenance job**	**Sensor inspection procedure**
3	Continuity of wire harness	Open or short circuit → Replace the wire harness. Black/Blue–Black/Blue White–White Blue–Blue Black–Black	Place the main switch to the ON position, and check the fault code indication. No fault code indicated. → Recovered. Fault code indicated. → Check the next step.
4	Sensor installation status	Check for loose mounting, pinched mounting, or hard mounting. Make sure that the mounting position is correct. Refer to “ADJUSTING THE ACCELERATOR POSITION SENSOR” on page 7-19.	Place the main switch to the ON position, and check the fault code indication. No fault code indicated. → Recovered. Fault code indicated. → Check the next step.

Fault code No.		**59**
Symptom		**Open or short circuit of accelerator position sensor lead**
Fail-safe action		**Engine startup: Possible under certain conditions**
		Riding: Possible under certain conditions
Diagnostic monitoring code No.		**D:14** **D:15**
D:14	**Meter display**	**Accelerator position sensor signal 1** **• 12–22 (fully closed position)** **• 97–107 (fully opened position)**
	Checking method	**• Check with throttle grip fully closed.** **• Check with throttle grip fully open.**
D:15	**Meter display**	**Accelerator position sensor signal 2** **• 10–24 (fully closed position)** **• 95–109 (fully opened position)**
	Checking method	**• Check with throttle grip fully closed.** **• Check with throttle grip fully open.**

	Item/components and probable cause	Check or maintenance job		Sensor inspection procedure
5	Supply voltage of accelerator position sensor lead	Check the supply voltage. Accelerator position sensor signal 1 Black/Blue–White Accelerator position sensor signal 2 Black/Blue–Black Refer to “CHECKING THE ACCELERATOR POSITION SENSOR” on page 8-123.		Place the main switch to the ON position, and check the fault code indication. No fault code indicated. → Recovered. Fault code indicated. → Check the next step.
		Line disconnection points	Output voltage	
		Disconnection of ground lead	5 V	
		Disconnection of output line	0 V	
		Disconnection of power supply line	0 V	

Fault code No.		**59**
Symptom		**Open or short circuit of accelerator position sensor lead**
Fail-safe action		**Engine startup: Possible under certain conditions**
		Riding: Possible under certain conditions
Diagnostic monitoring code No.		**D:14** **D:15**
D:14	**Meter display**	**Accelerator position sensor signal 1** **• 12–22 (fully closed position)** **• 97–107 (fully opened position)**
	Checking method	**• Check with throttle grip fully closed.** **• Check with throttle grip fully open.**
D:15	**Meter display**	**Accelerator position sensor signal 2** **• 10–24 (fully closed position)** **• 95–109 (fully opened position)**
	Checking method	**• Check with throttle grip fully closed.** **• Check with throttle grip fully open.**

	Item/components and probable cause	Check or maintenance job	Sensor inspection procedure
6	Accelerator position sensor malfunction	Check the accelerator position sensor signal 1 diagnostic mode (Code No. 14). When throttle is fully closed: A value of 12–22 is indicated. When throttle is fully opened: A value of 97–107 is indicated. Check the accelerator position sensor signal 2 diagnostic mode (Code No. 15). When throttle is fully closed: A value of 10–24 is indicated. When throttle is fully opened: A value of 95–109 is indicated. If the indication is outside of range: Replace the accelerator position sensor.	Place the main switch to the ON position, and check the fault code indication. No fault code indicated. → Recovered. Fault code indicated. → Check the next step.
7	ECU malfunction	Replace the ECU.	

Fault code No.	**60**
Symptom	**Defect Found in YCC-T Drive Type**
Fail-safe action	**Engine startup: Possible under certain conditions**
	Riding: Possible under certain conditions
Diagnostic monitoring code No.	**—**
Meter display	**—**
Checking method	**—**

	Item/components and probable cause	Check or maintenance job	Sensor inspection procedure
1	Connection of throttle servo motor coupler Check the connection of the coupler is secure. Remove the coupler, and check each pin (for bending, wear, or locking).	Poor connection → Connect it securely, or replace the wire harness.	Place the main switch to the ON position, and check the fault code indication. No fault code indicated. → Recovered. Fault code indicated. → Check the next step.
2	Connection of main harness ECU coupler Check the connection of the coupler is secure. Remove the coupler, and check each pin (for bending, wear, or locking).	Poor connection → Connect it securely, or replace the harness.	Place the main switch to the ON position, and check the fault code indication. No fault code indicated. → Recovered. Fault code indicated. → Check the next step.
3	Check the ETV (Electronic Throttle Valve) fuse.	Abnormality → Replace the ETV (Electronic Throttle Valve) fuse.	Place the main switch to the ON position, and check the fault code indication. No fault code indicated. → Recovered. Fault code indicated. → Check the next step.
4	Continuity of wire harness	Open or short circuit → Replace the wire harness. Light green/Red–Light green/Red Yellow/Red–Yellow/Red	Place the main switch to the ON position, and check the fault code indication. No fault code indicated. → Recovered. Fault code indicated. → Check the next step.
5	Throttle servo motor malfunction	Refer to “CHECKING THE THROTTLE SERVO MOTOR” on page 8-123. Throttle servo motor malfunction → Replace the throttle body.	Place the main switch to the ON position, and check the fault code indication. No fault code indicated. → Recovered. Fault code indicated. → Check the next step.

Fault code No.	**60**		
Symptom	**Defect Found in YCC-T Drive Type**		
Fail-safe action	**Engine startup: Possible under certain conditions**		
	Riding: Possible under certain conditions		
Diagnostic monitoring code No.	**—**		
Meter display	**—**		
Checking method	**—**		
	Item/components and probable cause	**Check or maintenance job**	**Sensor inspection procedure**
6	Throttle body malfunction	Refer to “ADJUSTING THE THROTTLE POSITION SENSOR” on page 7-19. Throttle body malfunction → Replace the throttle body.	Place the main switch to the ON position, and check the fault code indication. No fault code indicated. → Recovered. Fault code indicated. → Check the next step.
7	ECU malfunction	Replace the ECU.	

Fault code No.	**66**		
Symptom	**Open or short circuit of steering damper solenoid lead**		
Fail-safe action	**Engine startup: Possible**		
	Riding: Possible		
Diagnostic monitoring code No.	**D:47**		
Meter display	**The steering damper warning light lights up.**		
Checking method	**The engine warning light flashes according to the ON/OFF switching.**		
	Item/components and probable cause	**Check or maintenance job**	**Sensor inspection procedure**
1	Connection of steering damper solenoid coupler Check the connection of the coupler is secure. Remove the coupler, and check each pin (for bending, wear, or locking).	Poor connection → Connect it securely, or replace the wire harness.	Place the main switch to the ON position, and check the fault code indication. No fault code indicated. → Recovered. Fault code indicated. → Check the next step.
2	Connection of main harness ECU coupler Check the connection of the coupler is secure. Remove the coupler, and check each pin (for bending, wear, or locking).	Poor connection → Connect it securely, or replace the harness.	Place the main switch to the ON position, and check the fault code indication. No fault code indicated. → Recovered. Fault code indicated. → Check the next step.

Fault code No.	**66**
Symptom	**Open or short circuit of steering damper solenoid lead**
Fail-safe action	**Engine startup: Possible**
	Riding: Possible
Diagnostic monitoring code No.	**D:47**
Meter display	**The steering damper warning light lights up.**
Checking method	**The engine warning light flashes according to the ON/OFF switching.**

	Item/components and probable cause	Check or maintenance job	Sensor inspection procedure
3	Check the steering damper fuse.	Abnormality → Replace the steering damper fuse.	Place the main switch to the ON position, and check the fault code indication. No fault code indicated. → Recovered. Fault code indicated. → Check the next step.
4	Continuity of wire harness	Open or short circuit → Replace the wire harness. Red/White–Red/White Violet–Violet	Place the main switch to the ON position, and check the fault code indication. No fault code indicated. → Recovered. Fault code indicated. → Check the next step.
5	Steering damper solenoid malfunction	Refer to “CHECKING THE STEERING DAMPER SOLENOID” on page 8-126.	Place the main switch to the ON position, and check the fault code indication. No fault code indicated. → Recovered. Fault code indicated. → Check the next step.
6	ECU malfunction	Replace the ECU.	

Fault code No.	**70**
Symptom	**Engine has been left idling. (The ECU automatically stops the engine after 20 minutes if it is left idling.)**
Fail-safe action	**Engine startup: Possible**
	Riding: Possible
Diagnostic monitoring code No.	**—**
Meter display	**—**
Checking method	**—**

	Item/components and probable cause	Check or maintenance job	Sensor inspection procedure
	Engine idling stop		

Fault code No.	**Er-1**
Symptom	**No signal is received from the ECU.**
Fail-safe action	**Engine startup: Impossible if ECU Failure**
	Riding: Impossible if ECU Failure
Diagnostic monitoring code No.	**—**
Meter display	**—**
Checking method	**—**

	Item/components and probable cause	Check or maintenance job	Sensor inspection procedure
1	Connection of meter coupler Check the connection of the coupler is secure. Remove the coupler, and check each pin (for bending, wear, or locking).	Poor connection → Connect it securely, or repair/replace the wire harness.	Place the main switch to the ON position, and check the fault code indication. No fault code indicated. → Recovered. Fault code indicated. → Check the next step.
2	Connection of main harness ECU coupler Check the connection of the coupler is secure. Remove the coupler, and check each pin (for bending, wear, or locking).	Poor connection → Connect it securely, or repair/replace the wire harness.	Place the main switch to the ON position, and check the fault code indication. No fault code indicated. → Recovered. Fault code indicated. → Check the next step.
3	Continuity of wire harness	Open or short circuit → Connect it securely, or repair/replace the wire harness. Yellow/Blue–Yellow/Blue	Place the main switch to the ON position, and check the fault code indication. No fault code indicated. → Recovered. Fault code indicated. → Check the next step.
4	Abnormal meter unit operation	Replace the meter unit.	Place the main switch to the ON position, and check the fault code indication. No fault code indicated. → Recovered. Fault code indicated. → Check the next step.
5	ECU malfunction	Replace the ECU	

Fault code No.	**Er-2**
Symptom	**No signal is sent from ECU.**
Fail-safe action	**Engine startup: Possible**
	Riding: Possible
Diagnostic monitoring code No.	**—**
Meter display	**—**
Checking method	**—**

	Item/components and probable cause	Check or maintenance job	Sensor inspection procedure
1	Connection of meter coupler Check the connection of the coupler is secure. Remove the coupler, and check each pin (for bending, wear, or locking).	Poor connection → Connect it securely, or repair/replace the wire harness.	Place the main switch to the ON position, and check the fault code indication. No fault code indicated. → Recovered. Fault code indicated. → Check the next step.
2	Connection of main harness ECU coupler Check the connection of the coupler is secure. Remove the coupler, and check each pin (for bending, wear, or locking).	Poor connection → Connect it securely, or repair/replace the wire harness.	Place the main switch to the ON position, and check the fault code indication. No fault code indicated. → Recovered. Fault code indicated. → Check the next step.
3	Continuity of wire harness	Open or short circuit → Connect it securely, or repair/replace the wire harness. Yellow/Blue–Yellow/Blue	Place the main switch to the ON position, and check the fault code indication. No fault code indicated. → Recovered. Fault code indicated. → Check the next step.
4	Abnormal meter unit operation	Replace the meter unit.	Place the main switch to the ON position, and check the fault code indication. No fault code indicated. → Recovered. Fault code indicated. → Check the next step.
5	ECU malfunction	Replace the ECU.	

Fault code No.	**Er-3**
Symptom	**Correct data cannot be received from the ECU.**
Fail-safe action	**Engine startup: Possible**
	Riding: Possible
Diagnostic monitoring code No.	**—**
Meter display	**—**
Checking method	**—**

	Item/components and probable cause	Check or maintenance job	Sensor inspection procedure
1	Connection of meter coupler Check the connection of the coupler is secure. Remove the coupler, and check each pin (for bending, wear, or locking).	Poor connection → Connect it securely, or repair/replace the wire harness.	Place the main switch to the ON position, and check the fault code indication. No fault code indicated. → Recovered. Fault code indicated. → Check the next step.
2	Connection of main harness ECU coupler Check the connection of the coupler is secure. Remove the coupler, and check each pin (for bending, wear, or locking).	Poor connection → Connect it securely, or repair/replace the wire harness.	Place the main switch to the ON position, and check the fault code indication. No fault code indicated. → Recovered. Fault code indicated. → Check the next step.
3	Continuity of wire harness	Open or short circuit → Connect it securely, or repair/replace the wire harness. Yellow/Blue–Yellow/Blue	Place the main switch to the ON position, and check the fault code indication. No fault code indicated. → Recovered. Fault code indicated. → Check the next step.
4	Abnormal meter unit operation	Replace the meter unit.	Place the main switch to the ON position, and check the fault code indication. No fault code indicated. → Recovered. Fault code indicated. → Check the next step.
5	ECU malfunction	Replace the ECU.	

Fault code No.	**Er-4**
Symptom	**No registration data can be received from the meter unit.**
Fail-safe action	**Engine startup: Possible**
	Riding: Possible
Diagnostic monitoring code No.	**—**
Meter display	**—**
Checking method	**—**

	Item/components and probable cause	Check or maintenance job	Sensor inspection procedure
1	Connection of meter coupler Check the connection of the coupler is secure. Remove the coupler, and check each pin (for bending, wear, or locking).	Poor connection → Connect it securely, or repair/replace the wire harness.	Place the main switch to the ON position, and check the fault code indication. No fault code indicated. → Recovered. Fault code indicated. → Check the next step.
2	Connection of main harness ECU coupler Check the connection of the coupler is secure. Remove the coupler, and check each pin (for bending, wear, or locking).	Poor connection → Connect it securely, or repair/replace the wire harness.	Place the main switch to the ON position, and check the fault code indication. No fault code indicated. → Recovered. Fault code indicated. → Check the next step.
3	Continuity of wire harness	Open or short circuit → Connect it securely, or repair/replace the wire harness. Yellow/Blue–Yellow/Blue	Place the main switch to the ON position, and check the fault code indication. No fault code indicated. → Recovered. Fault code indicated. → Check the next step.
4	Abnormal meter unit operation	Replace the meter unit.	Place the main switch to the ON position, and check the fault code indication. No fault code indicated. → Recovered. Fault code indicated. → Check the next step.
5	ECU malfunction	Replace the ECU.	

EAS27550
FUEL PUMP SYSTEM

EAS27560
CIRCUIT DIAGRAM

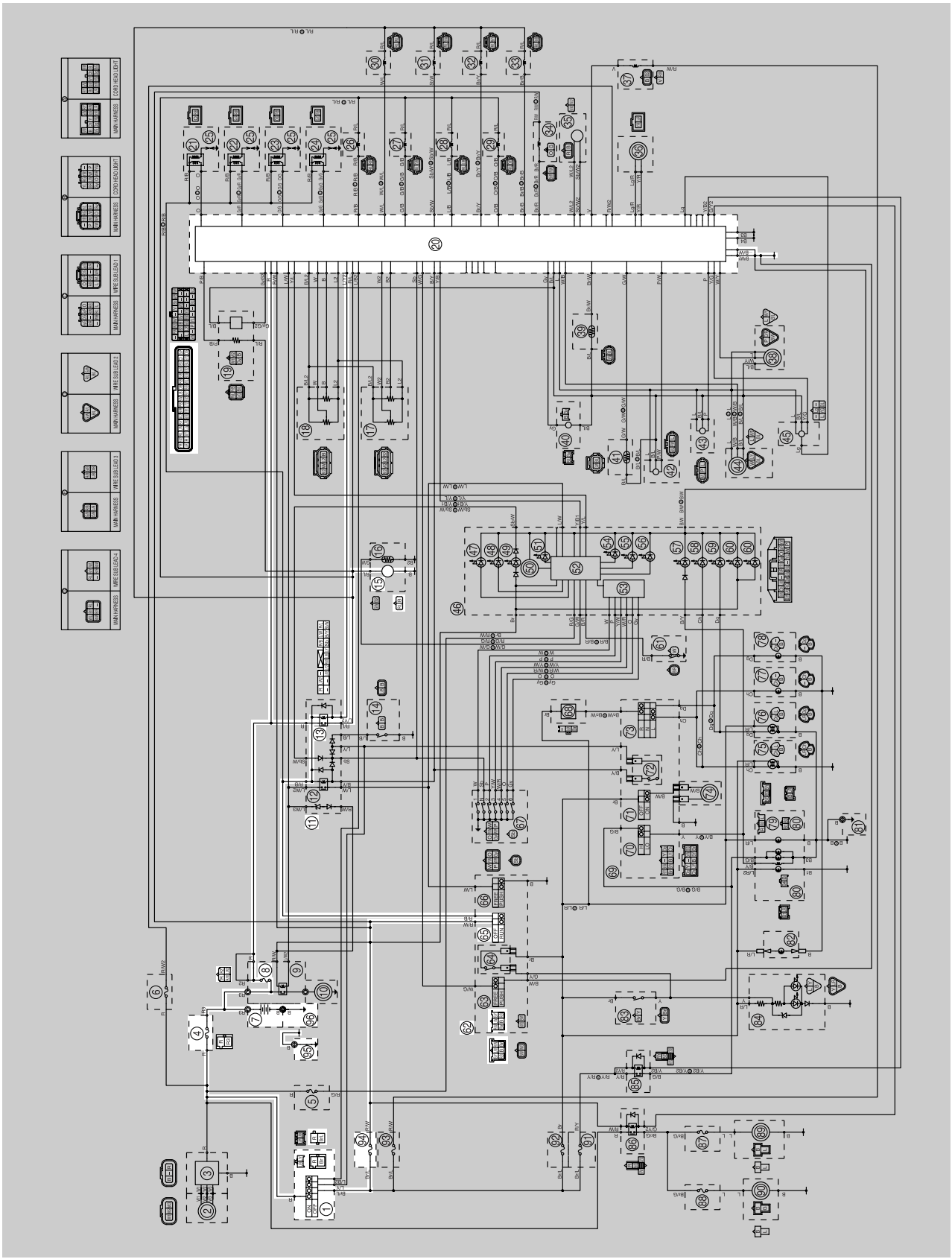

1. Main switch
4. Main fuse
7. Battery
8. Fuel injection system fuse
11. Relay unit
13. Fuel pump relay
15. Fuel pump
20. ECU (engine control unit)
62. Right handlebar switch
65. Engine stop switch
94. Ignition fuse
95. Engine ground
96. Battery negative lead

EAS27570

TROUBLESHOOTING

If the fuel pump fails to operate.

TIP

- Before troubleshooting, remove the following part(s):

1. Rider seat
2. Fuel tank
3. Passenger seat
4. Left side cowling

1. Check the fuses. (Main, ignition and fuel injection system) Refer to “CHECKING THE FUSES” on page 8-109.	NG→	Replace the fuse(s).
OK↓		
2. Check the battery. Refer to “CHECKING AND CHARGING THE BATTERY” on page 8-109.	NG→	• Clean the battery terminals. • Recharge or replace the battery.
OK↓		
3. Check the main switch. Refer to “CHECKING THE SWITCHES” on page 8-105.	NG→	Replace the main switch.
OK↓		
4. Check the engine stop switch. Refer to “CHECKING THE SWITCHES” on page 8-105.	NG→	Replace the right handlebar switch.
OK↓		
5. Check the relay unit (fuel pump relay). Refer to “CHECKING THE RELAYS” on page 8-113.	NG→	Replace the relay unit.
OK↓		
6. Check the fuel pump. Refer to “CHECKING THE FUEL PRESSURE” on page 7-18.	NG→	Replace the fuel pump.
OK↓		

7. Check the entire fuel pump system's wiring. Refer to "CIRCUIT DIAGRAM" on page 8-97.	NG→	Properly connect or repair the fuel pump system's wiring.
OK↓		
Replace the ECU.		

EAS27972
ELECTRICAL COMPONENTS

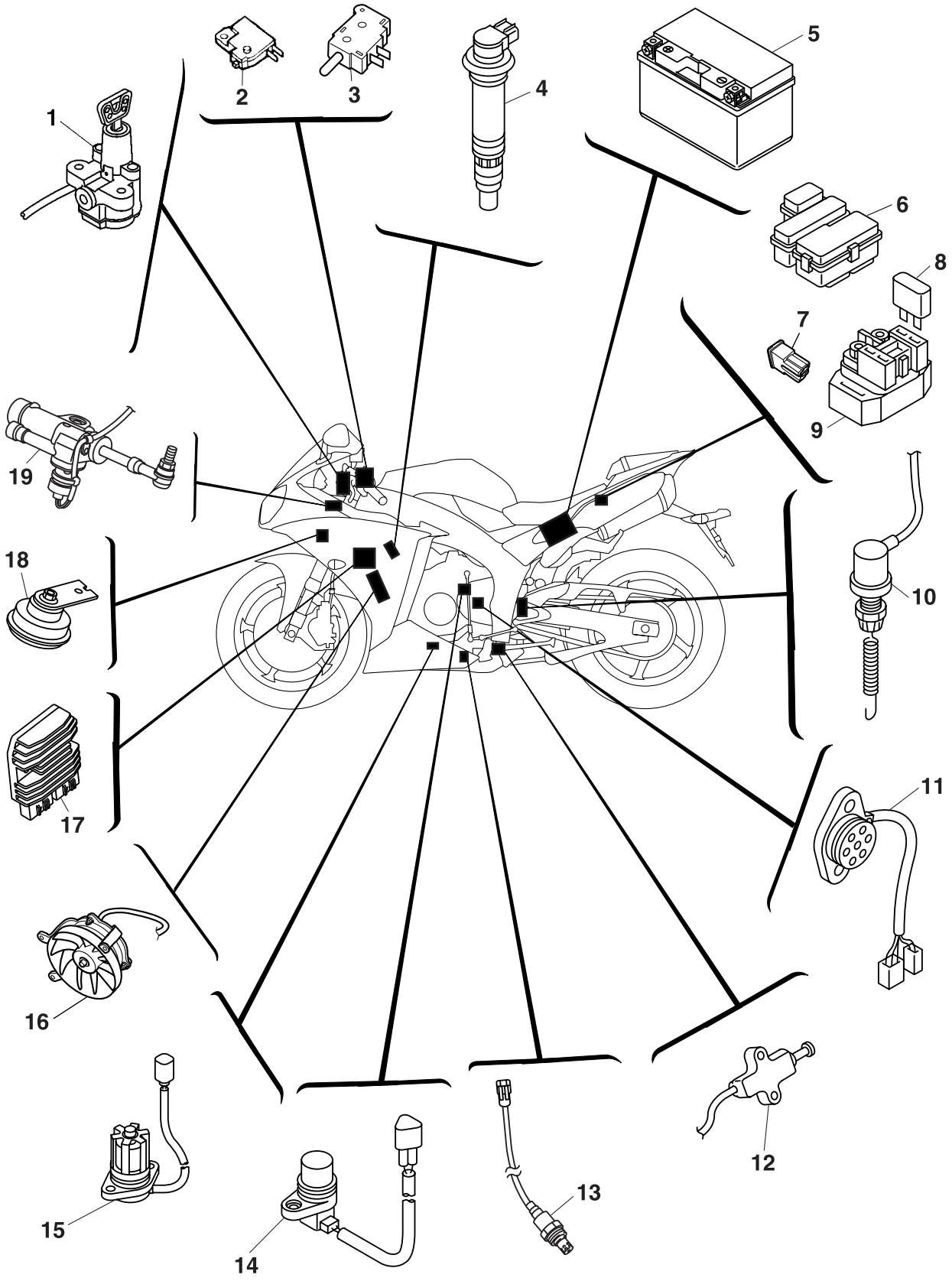

1. Main switch
2. Front brake light switch
3. Clutch switch
4. Ignition coil
5. Battery
6. Fuse box
7. Main fuse
8. Fuel injection system fuse
9. Starter relay
10. Rear brake light switch
11. Gear position sensor
12. Sidestand switch
13. O_2 sensor
14. Speed sensor
15. Oil level switch
16. Radiator fan motor
17. Rectifier/regulator
18. Horn
19. Steering damper

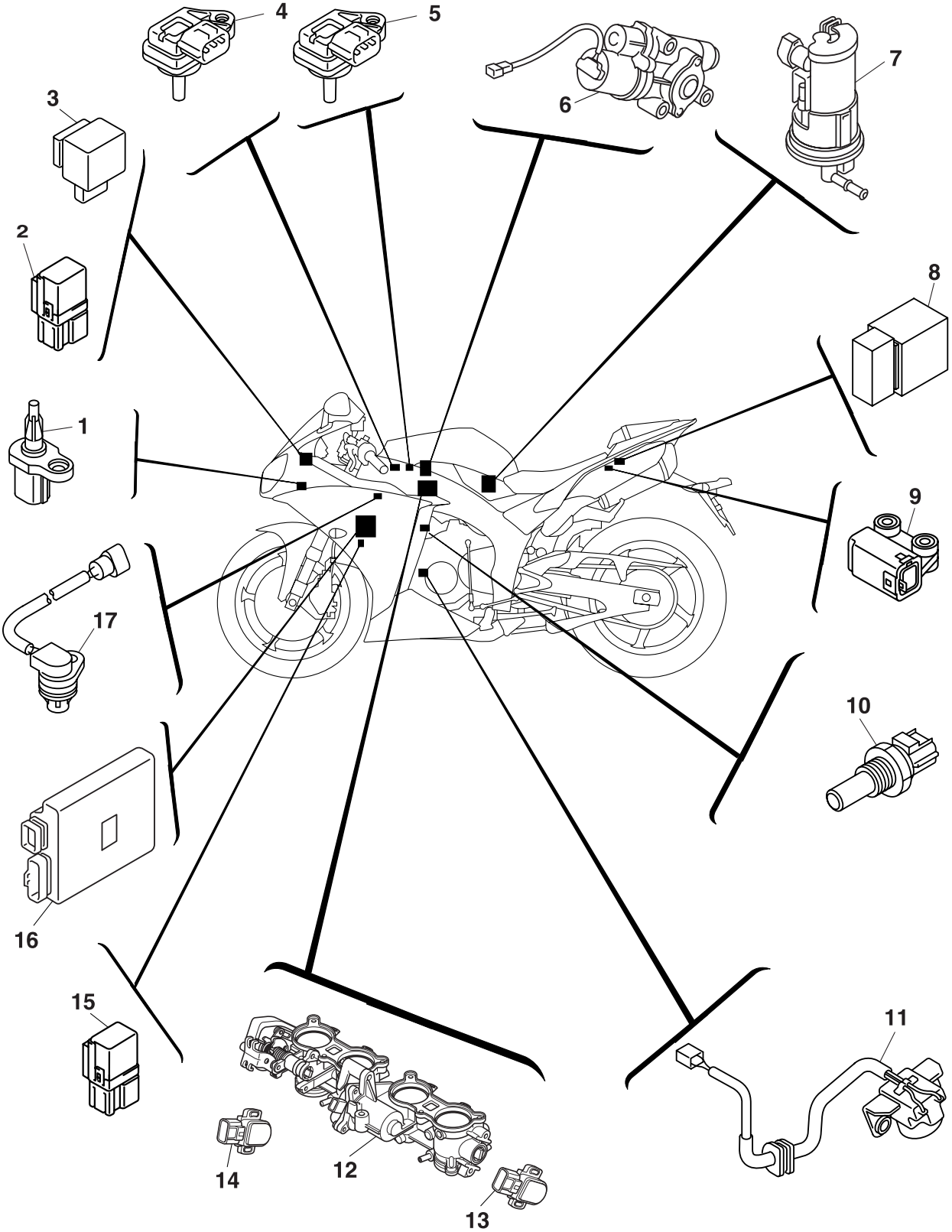
4
5
3
6
7
2
8
1
9
17
10
16
15
11
14
12
13

1. Intake air temperature sensor
2. Headlight relay
3. Turn signal relay
4. Atmospheric pressure sensor
5. Intake air pressure sensor
6. Intake funnel servo motor
7. Fuel pump
8. Relay unit
9. Lean angle sensor
10. Coolant temperature sensor
11. Crankshaft position sensor
12. Throttle servo motor
13. Throttle position sensor
14. Accelerator position sensor
15. Radiator fan motor relay
16. ECU (engine control unit)
17. Cylinder identification sensor

EAS27980
CHECKING THE SWITCHES

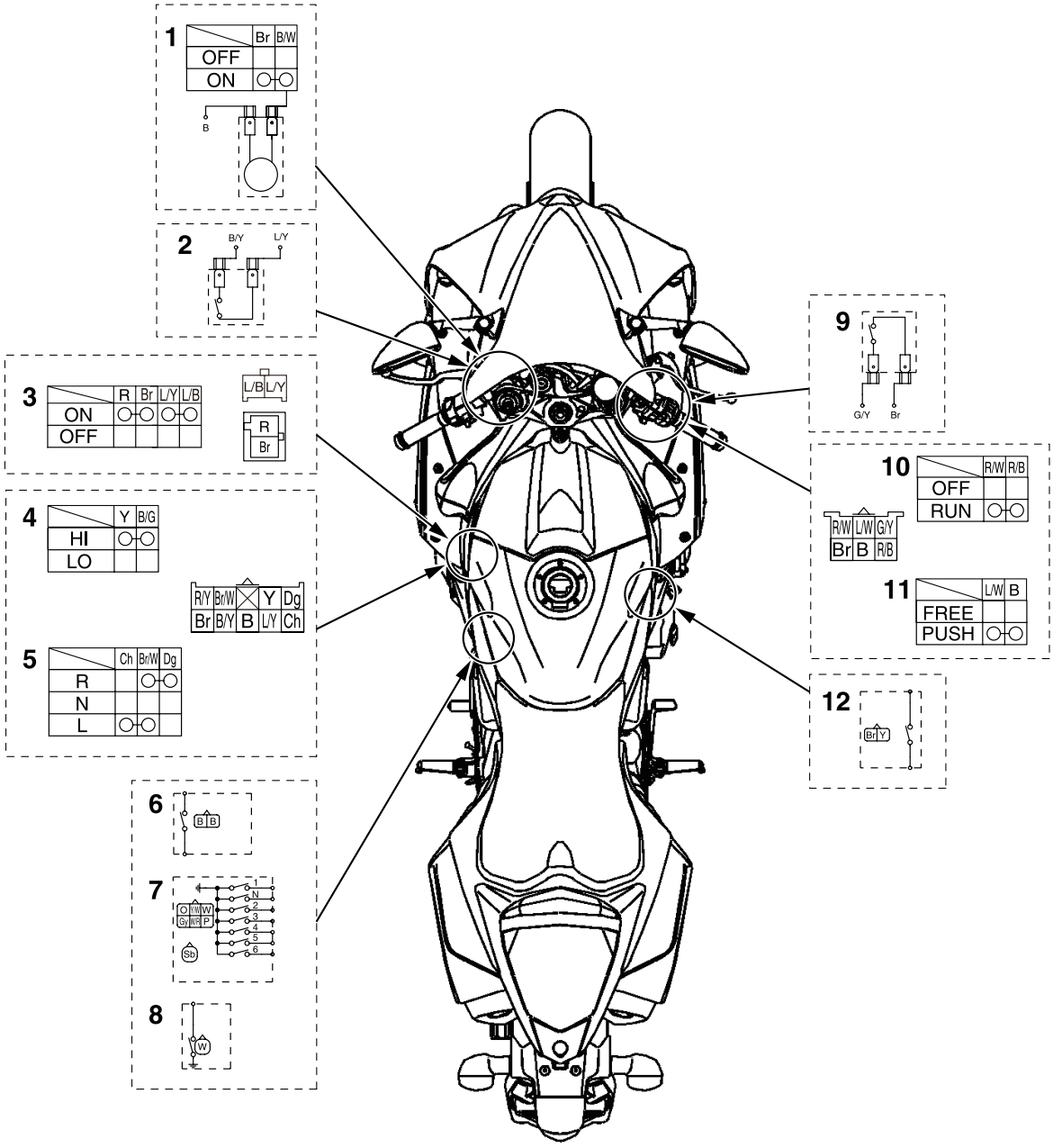

1. Horn switch
2. Clutch switch
3. Main switch
4. Dimmer switch
5. Turn signal switch
6. Sidestand switch
7. Gear position sensor
8. Oil level switch
9. Front brake light switch
10. Engine stop switch
11. Start switch
12. Rear brake light switch

Check each switch for continuity with the pocket tester. If the continuity reading is incorrect, check the wiring connections and if necessary, replace the switch.

ECA14370

NOTICE

Never insert the tester probes into the coupler terminal slots "a". Always insert the probes from the opposite end of the coupler, taking care not to loosen or damage the leads.

Pocket tester
90890-03112
Analog pocket tester
YU-03112-C

TIP

- Before checking for continuity, set the pocket tester to "0" and to the "Ω × 1" range.
- When checking for continuity, switch back and forth between the switch positions a few times.

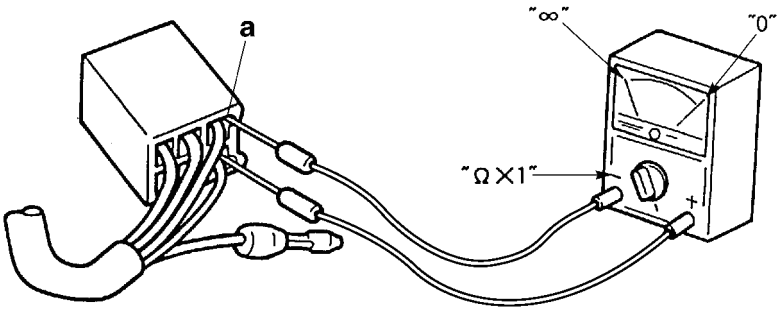

The switches and their terminal connections are illustrated as in the following example of the main switch.
The switch positions "a" are shown in the far left column and the switch lead colors "b" are shown in the top row.
The continuity (i. e., a closed circuit) between switch terminals at a given switch position is indication by " ○——○ ". There is continuity between red and brown/blue, and blue/yellow and blue/black when the switch is set to "ON".

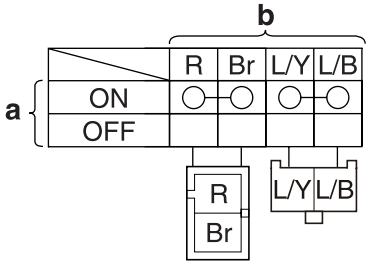

EAS27990

CHECKING THE BULBS AND BULB SOCKETS

TIP

Do not check any of the lights that use LEDs.

Check each bulb and bulb socket for damage or wear, proper connections, and also for continuity between the terminals.

Damage/wear → Repair or replace the bulb, bulb socket or both.

Improperly connected → Properly connect.

No continuity → Repair or replace the bulb, bulb socket or both.

Types of bulbs

The bulbs used on this vehicle are shown in the illustration.

- Bulbs “a” are used for the headlights and usually use a bulb holder that must be detached before removing the bulb.
- Bulbs “b” and “c” are used for front turn signal/position lights and rear turn signal lights. They can be removed from the socket by pushing and turning the bulb counterclockwise.
- Bulbs “d” are used for auxiliary and license plate lights and can be removed from their respective socket by carefully pulling them out.

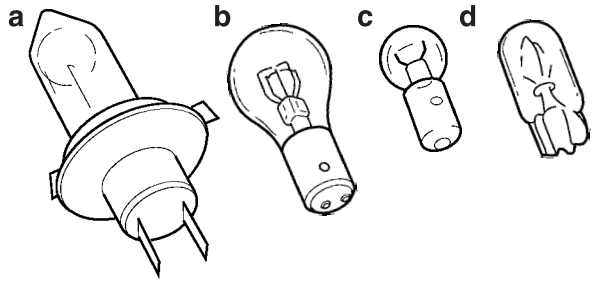

Checking the condition of the bulbs

The following procedure applies to all of the bulbs.

1. Remove:
   - Bulb

EWA13320

WARNING

Since the headlight bulb gets extremely hot, keep flammable products and your hands away from the bulb until it has cooled down.

ECA14380

NOTICE

- **Be sure to hold the socket firmly when removing the bulb. Never pull the lead, otherwise it may be pulled out of the terminal in the coupler.**
- **Avoid touching the glass part of the headlight bulb to keep it free from oil, otherwise the transparency of the glass, the life of the bulb, and the luminous flux will be adversely affected. If the headlight bulb gets soiled, thoroughly it with a cloth moistened with alcohol or lacquer thinner.**

2. Check:
   - Bulb (for continuity)
     (with the pocket tester)
     No continuity → Replace.

Pocket tester
90890-03112
Analog pocket tester
YU-03112-C

TIP

Before checking for continuity, set the pocket tester to “0” and to the “Ω × 1” range.

▼▼▼▼▼▼▼▼▼▼▼▼▼▼▼▼▼▼▼▼▼▼▼▼▼▼▼▼▼▼

a. Connect the positive tester probe to terminal “1” and the negative tester probe to terminal “2”, and check the continuity.

b. If reading indicate no continuity, replace the bulb.

▲▲▲▲▲▲▲▲▲▲▲▲▲▲▲▲▲▲▲▲▲▲▲▲▲▲▲▲▲▲

Checking the condition of the bulb sockets

The following procedure applies to all of the bulb sockets.

1. Check:
   - Bulb socket (for continuity)
     (with the pocket tester)
     No continuity → Replace.

Pocket tester
90890-03112
Analog pocket tester
YU-03112-C

TIP
Check each bulb socket for continuity in the same manner as described in the bulb section; however, note the following.

▼▼▼▼▼▼▼▼▼▼▼▼▼▼▼▼▼▼▼▼▼▼▼▼▼▼▼▼▼▼▼▼▼▼

a. Install a good bulb into the bulb socket.
b. Connect the pocket tester probes to the respective leads of the bulb socket.
c. Check the bulb socket for continuity. If any of the readings indicate no continuity, replace the bulb socket.

▲▲▲▲▲▲▲▲▲▲▲▲▲▲▲▲▲▲▲▲▲▲▲▲▲▲▲▲▲▲▲▲▲▲

EAS28000
CHECKING THE FUSES

The following procedure applies to all of the fuses.

ECA13680
NOTICE
To avoid a short circuit, always set the main switch to "OFF" when checking or replacing a fuse.

1. Remove:
   - Rider sear
     Refer to "GENERAL CHASSIS" on page 4-1.
2. Check:
   - Fuse

▼▼▼▼▼▼▼▼▼▼▼▼▼▼▼▼▼▼▼▼▼▼▼▼▼▼▼▼▼▼▼▼▼▼

a. Connect the pocket tester to the fuse and check the continuity.

TIP
Set the pocket tester selector to "Ω × 1".

Pocket tester
90890-03112
Analog pocket tester
YU-03112-C

b. If the pocket tester indicates "∞", replace the fuse.

▲▲▲▲▲▲▲▲▲▲▲▲▲▲▲▲▲▲▲▲▲▲▲▲▲▲▲▲▲▲▲▲▲▲

3. Replace:
   - Blown fuse

▼▼▼▼▼▼▼▼▼▼▼▼▼▼▼▼▼▼▼▼▼▼▼▼▼▼▼▼▼▼▼▼▼▼

a. Set the main switch to "OFF".
b. Install a new fuse of the correct amperage rating.
c. Set on the switches to verify if the electrical circuit is operational.
d. If the fuse immediately blows again, check the electrical circuit.

Fuses	Amperage rating	Q'ty
Main	50 A	1
Headlight	20 A	1
Signaling system	7.5 A	1
Ignition	15 A	1
Right radiator fan motor	15 A	1
Left radiator fan motor	15 A	1
Fuel injection system	15 A	1
Steering damper	7.5 A	1
Backup	7.5 A	1
ETV (Electronic Throttle Valve)	7.5 A	1
Spare	20 A	1
Spare	15 A	2
Spare	7.5 A	1

EWA13310
WARNING
Never use a fuse with an amperage rating other than that specified. Improvising or using a fuse with the wrong amperage rating may cause extensive damage to the electrical system, cause the lighting and ignition systems to malfunction and could possibly cause a fire.

▲▲▲▲▲▲▲▲▲▲▲▲▲▲▲▲▲▲▲▲▲▲▲▲▲▲▲▲▲▲▲▲▲▲

4. Install:
   - Rider seat
     Refer to "GENERAL CHASSIS" on page 4-1.

EAS28030
CHECKING AND CHARGING THE BATTERY

EWA13290
WARNING
Batteries generate explosive hydrogen gas and contain electrolyte which is made of poisonous and highly caustic sulfuric acid. Therefore, always follow these preventive measures:
- **Wear protective eye gear when handling or working near batteries.**
- **Charge batteries in a well-ventilated area.**

- **Keep batteries away from fire, sparks or open flames (e.g., welding equipment, lighted cigarettes).**
- **DO NOT SMOKE when charging or handling batteries.**
- **KEEP BATTERIES AND ELECTROLYTE OUT OF REACH OF CHILDREN.**
- **Avoid bodily contact with electrolyte as it can cause severe burns or permanent eye injury.**

FIRST AID IN CASE OF BODILY CONTACT:
EXTERNAL
- **Skin — Wash with water.**
- **Eyes — Flush with water for 15 minutes and get immediate medical attention.**

INTERNAL
- **Drink large quantities of water or milk followed with milk of magnesia, beaten egg or vegetable oil. Get immediate medical attention.**

ECA13660
NOTICE

- **This is a sealed battery. Never remove the sealing caps because the balance between cells will not be maintained and battery performance will deteriorate.**
- **Charging time, charging amperage and charging voltage for an VRLA (Valve Regulated Lead Acid) battery are different from those of conventional batteries. The VRLA (Valve Regulated Lead Acid) battery should be charged as explained in the charging method illustrations. If the battery is overcharged, the electrolyte level will drop considerably. Therefore, take special care when charging the battery.**

TIP
Since VRLA (Valve Regulated Lead Acid) batteries are sealed, it is not possible to check the charge state of the battery by measuring the specific gravity of the electrolyte. Therefore, the charge of the battery has to be checked by measuring the voltage at the battery terminals.

1. Remove:
   - Rider seat
   - Battery cover
     Refer to “GENERAL CHASSIS” on page 4-1.
2. Disconnect:
   - Battery leads
     (from the battery terminals)

ECA13640
NOTICE

First, disconnect the battery negative lead “1”, and then battery positive lead “2”.

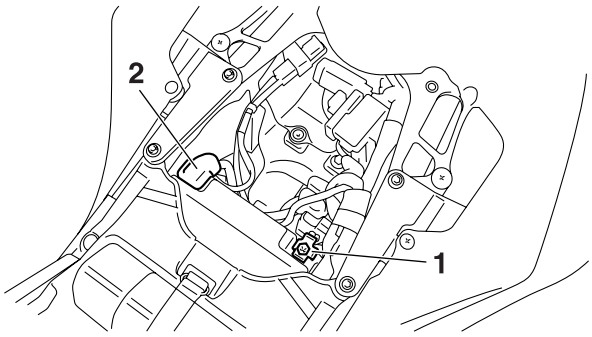

3. Remove:
   - Battery
4. Check:
   - Battery charge

▼▼▼▼▼▼▼▼▼▼▼▼▼▼▼▼▼▼▼▼▼▼▼▼▼▼▼▼▼▼▼▼▼▼

a. Connect a pocket tester to the battery terminals.

• Positive tester probe Positive battery terminal • Negative tester probe Negative battery terminal

TIP
- The charge state of an VRLA (Valve Regulated Lead Acid) battery can be checked by measuring its open-circuit voltage (i.e., the voltage when the positive battery terminal is disconnected).
- No charging is necessary when the open-circuit voltage equals or exceeds 12.4 V.

b. Check the charge of the battery, as shown in the charts and the following example.

Example Open-circuit voltage = 12.0 V Charging time = 6.5 hours Charge of the battery = 20–30%

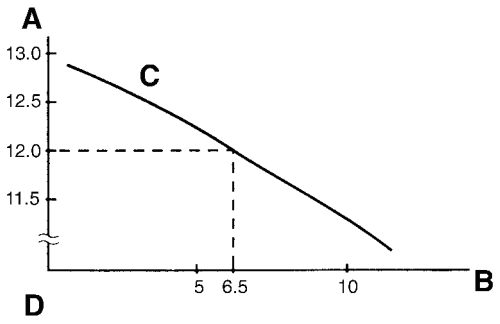

A. Open-circuit voltage (V)
B. Charging time (hours)
C. Relationship between the open-circuit voltage and the charging time at 20 °C (68 °F)
D. These values vary with the temperature, the condition of the battery plates, and the electrolyte level.

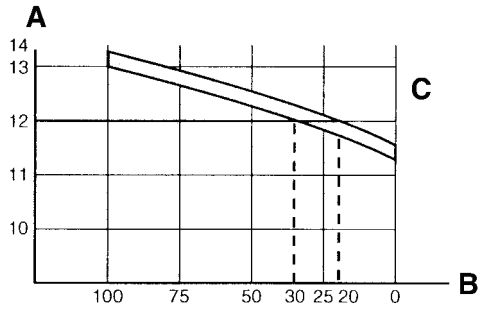

A. Open-circuit voltage (V)
B. Charging condition of the battery (%)
C. Ambient temperature 20 °C (68 °F)

▲▲▲▲▲▲▲▲▲▲▲▲▲▲▲▲▲▲▲▲▲▲▲▲▲▲▲▲▲▲▲▲

5. Charge:
   - Battery
     (refer to the appropriate charging method illustration)

EWA13300

WARNING

Do not quick charge a battery.

ECA13670

NOTICE

- **Never remove the VRLA (Valve Regulated Lead Acid) battery sealing caps.**
- **Do not use a high-rate battery charger since it forces a high-amperage current into the battery quickly and can cause battery overheating and battery plate damage.**
- **If it is impossible to regulate the charging current on the battery charger, be careful not to overcharge the battery.**
- **When charging a battery, be sure to remove it from the vehicle. (If charging has to be done with the battery mounted on the vehicle, disconnect the battery negative lead from the battery terminal.)**
- **To reduce the chance of sparks, do not plug in the battery charger until the battery charger leads are connected to the battery.**
- **Before removing the battery charger lead clips from the battery terminals, be sure to turn off the battery charger.**
- **Make sure the battery charger lead clips are in full contact with the battery terminal and that they are not shorted. A corroded battery charger lead clip may generate heat in the contact area and a weak clip spring may cause sparks.**
- **If the battery becomes hot to the touch at any time during the charging process, disconnect the battery charger and let the battery cool before reconnecting it. Hot batteries can explode!**
- **As shown in the following illustration, the open-circuit voltage of an VRLA (Valve Regulated Lead Acid) battery stabilizes about 30 minutes after charging has been completed. Therefore, wait 30 minutes after charging is completed before measuring the open-circuit voltage.**

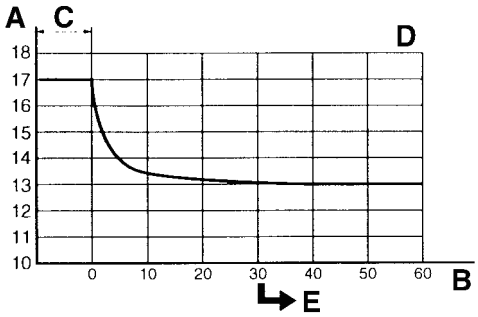

A. Open-circuit voltage (V)
B. Time (minutes)
C. Charging
D. Ambient temperature 20 °C (68 °F)
E. Check the open-circuit voltage.

▼▼▼▼▼▼▼▼▼▼▼▼▼▼▼▼▼▼▼▼▼▼▼▼▼▼▼▼▼▼▼▼

Charging method using a variable-current (voltage) charger

a. Measure the open-circuit voltage prior to charging.

TIP

Voltage should be measured 30 minutes after the engine is stopped.

b. Connect a charged and ammeter to the battery and start charging.

TIP

Set the charging voltage at 16–17 V. If the setting is lower, charging will be insufficient. If too high, the battery will be over-charged.

c. Make sure that the current is higher than the standard charging current written on the battery.

TIP

If the current is lower than the standard charging current written on the battery, set the charging voltage adjust dial at 20–24 V and monitor the amperage for 3–5 minutes to check the battery.

- Reach the standard charging current:
  Battery is good.
- Does not reach the standard charging current:
  Replace the battery.

d. Adjust the voltage so that the current is at the standard charging level.
e. Set the time according to the charging time suitable for the open-circuit voltage.
f. If charging requires more than 5 hours, it is advisable to check the charging current after a lapse of 5 hours. If there is any change in the amperage, readjust the voltage to obtain the standard charging current.
g. Measure the battery open-circuit voltage after leaving the battery unused for more than 30 minutes.

12.4 V or more --- Charging is complete.
12.3 V or less --- Recharging is required.
Under 12.0 V --- Replace the battery.

▲▲▲▲▲▲▲▲▲▲▲▲▲▲▲▲▲▲▲▲▲▲▲▲▲▲▲▲▲▲▲▲▲

▼▼▼▼▼▼▼▼▼▼▼▼▼▼▼▼▼▼▼▼▼▼▼▼▼▼▼▼▼▼▼▼▼

Charging method using a constant voltage charger

a. Measure the open-circuit voltage prior to charging.

TIP

Voltage should be measured 30 minutes after the engine is stopped.

b. Connect a charger and ammeter to the battery and start charging.
c. Make sure that the current is higher than the standard charging current written on the battery.

TIP

If the current is lower than the standard charging current written on the battery, This type of battery charger cannot charge the VRLA (Valve Regulated Lead Acid) battery. A variable voltage charger is recommended.

d. Charge the battery until the battery's charging voltage is 15 V.

TIP

Set the charging time at 20 hours (maximum).

e. Measure the battery open-circuit voltage after leaving the battery unused for more than 30 minutes.

12.4 V or more --- Charging is complete.
12.3 V or less --- Recharging is required.
Under 12.0 V --- Replace the battery.

▲▲▲▲▲▲▲▲▲▲▲▲▲▲▲▲▲▲▲▲▲▲▲▲▲▲▲▲▲▲▲▲▲

6. Install:
   - Battery
7. Connect:
   - Battery leads
     (to the battery terminals)

ECA13630

NOTICE

First, connect the battery positive lead "1", and then the battery negative lead "2".

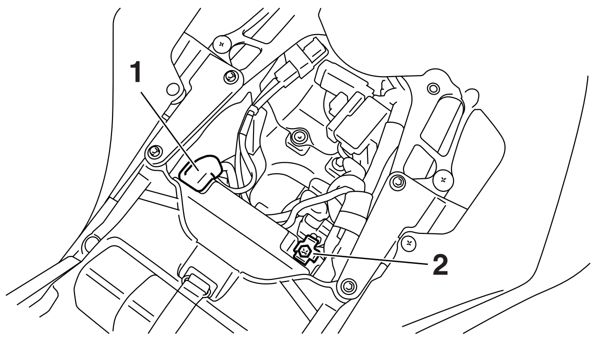

8. Check:
   - Battery terminals
     Dirt → Clean with a wire brush.
     Loose connection → Connect properly.

9. Lubricate:
   - Battery terminals

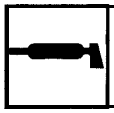

Recommended lubricant
Dielectric grease

10. Install:
    - Battery cover
    - Rider seat
      Refer to “GENERAL CHASSIS” on page 4-1.

EAS28040
CHECKING THE RELAYS

Check each switch for continuity with the pocket tester. If the continuity reading is incorrect, replace the relay.

Pocket tester
90890-03112
Analog pocket tester
YU-03112-C

1. Disconnect the relay from the wire harness.
2. Connect the pocket tester (Ω × 1) and battery (12 V) to the relay terminal as shown. Check the relay operation.
   Out of specification → Replace.

Starter relay

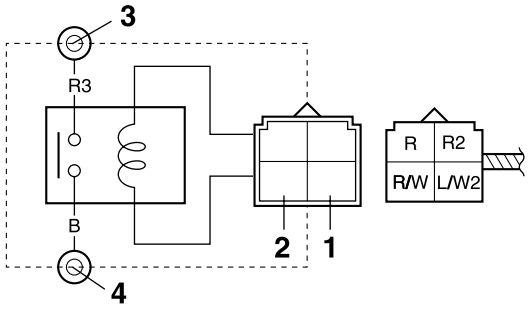

1. Positive battery terminal
2. Negative battery terminal
3. Positive tester probe
4. Negative tester probe

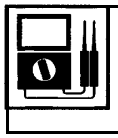

Result
Continuity
(between “3” and “4”)

Relay unit (starting circuit cut-off relay)

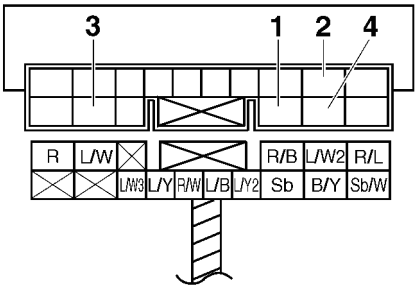

1. Positive battery terminal
2. Negative battery terminal
3. Positive tester probe
4. Negative tester probe

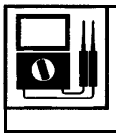

Result
Continuity
(between “3” and “4”)

Relay unit (fuel pump relay)

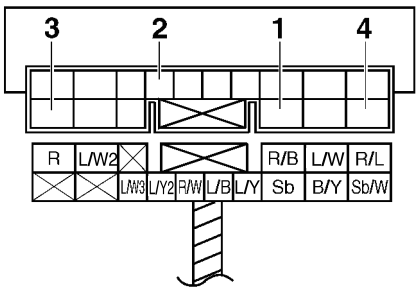

1. Positive battery terminal
2. Negative battery terminal
3. Positive tester probe
4. Negative tester probe

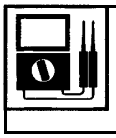

Result
Continuity
(between “3” and “4”)

Headlight relay

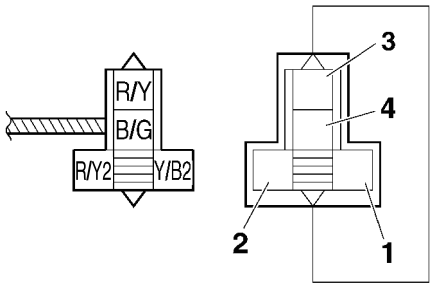

1. Positive battery terminal
2. Negative battery terminal
3. Positive tester probe
4. Negative tester probe

Result
Continuity
(between “3” and “4”)

Radiator fan motor relay

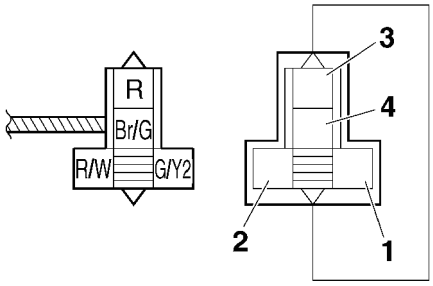

1. Positive battery terminal
2. Negative battery terminal
3. Positive tester probe
4. Negative tester probe

Result
Continuity
(between “3” and “4”)

EAS14B1015
CHECKING THE TURN SIGNAL RELAY

1. Check:
   - Turn signal relay input voltage
     Out of specification → The wiring circuit from the main switch to the turn signal relay coupler is faulty and must be repaired.

Turn signal relay input voltage
DC 12 V

▼▼▼▼▼▼▼▼▼▼▼▼▼▼▼▼▼▼▼▼▼▼▼▼▼▼▼▼▼▼▼▼

a. Connect the pocket tester (DC 20 V) to the turn signal relay terminal as shown.

Pocket tester
90890-03112
Analog pocket tester
YU-03112-C

- Positive tester probe
  Brown “1”
- Negative tester probe
  Ground

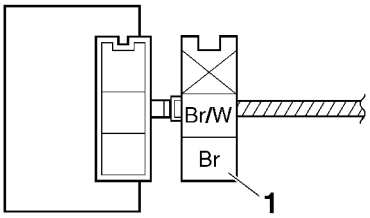

b. Turn the main switch to “ON”.
c. Measure the turn signal relay input voltage.

▲▲▲▲▲▲▲▲▲▲▲▲▲▲▲▲▲▲▲▲▲▲▲▲▲▲▲▲▲▲▲▲

2. Check:
   - Turn signal relay output voltage
     Out of specification → Replace.

Turn signal relay output voltage
DC 12 V

▼▼▼▼▼▼▼▼▼▼▼▼▼▼▼▼▼▼▼▼▼▼▼▼▼▼▼▼▼▼▼▼

a. Connect the pocket tester (DC 20 V) to the turn signal relay terminal as shown.

Pocket tester
90890-03112
Analog pocket tester
YU-03112-C

- Positive tester probe
  Brown/White “1”
- Negative tester probe
  Ground

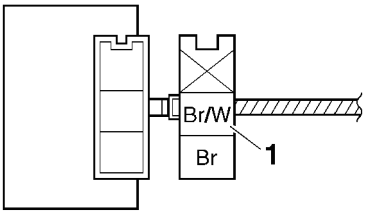

b. Turn the main switch to “ON”.
c. Measure the turn signal relay output voltage.

▲▲▲▲▲▲▲▲▲▲▲▲▲▲▲▲▲▲▲▲▲▲▲▲▲▲▲▲▲▲▲▲

EAS28050
CHECKING THE RELAY UNIT (DIODE)

1. Check:
   - Relay unit (diode)
     Out of specification → Replace.

Pocket tester
90890-03112
Analog pocket tester
YU-03112-C

TIP
The pocket tester or the analog pocket tester readings are shown in the following table.

Continuity
Positive tester probe
Sky blue “1”
Negative tester probe
Black/Yellow “2”
No continuity
Positive tester probe
Black/Yellow “2”
Negative tester probe
Sky blue “1”
Continuity
Positive tester probe
Sky blue “1”
Negative tester probe
Blue/Yellow “3”
No continuity
Positive tester probe
Blue/Yellow “3”
Negative tester probe
Sky blue “1”
Continuity
Positive tester probe
Sky blue “1”
Negative tester probe
Sky blue/White “4”
No continuity
Positive tester probe
Sky blue/White “4”
Negative tester probe
Sky blue “1”
Continuity
Positive tester probe
Blue/Black “5”
Negative tester probe
Blue/Yellow “3”
No continuity
Positive tester probe
Blue/Yellow “3”
Negative tester probe
Blue/Black “5”

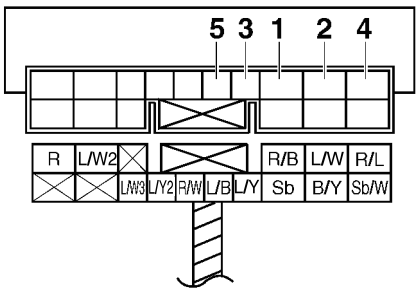

▼▼▼▼▼▼▼▼▼▼▼▼▼▼▼▼▼▼▼▼▼▼▼▼▼▼▼▼▼▼▼▼

a. Disconnect the relay unit coupler from the wire harness.
b. Connect the pocket tester (Ω × 1) to the relay unit terminal as shown.
c. Check the relay unit (diode) for continuity.
d. Check the relay unit (diode) for no continuity.

▲▲▲▲▲▲▲▲▲▲▲▲▲▲▲▲▲▲▲▲▲▲▲▲▲▲▲▲▲▲▲▲

EAS28100

CHECKING THE IGNITION COILS

The following procedure applies to all of the ignition coils.

1. Check:
   - Primary coil resistance
     Out of specification → Replace.

Primary coil resistance
0.85–1.15 Ω

▼▼▼▼▼▼▼▼▼▼▼▼▼▼▼▼▼▼▼▼▼▼▼▼▼▼▼▼▼▼▼▼

a. Remove the ignition coil from the spark plug.
b. Connect the pocket tester (Ω × 1) to the ignition coil as shown.

Pocket tester
90890-03112
Analog pocket tester
YU-03112-C

- Positive tester probe
  Red/Black "1"
- Negative tester probe
  Orange or Gray/Red or Orange/Green or Gray/Green "2"

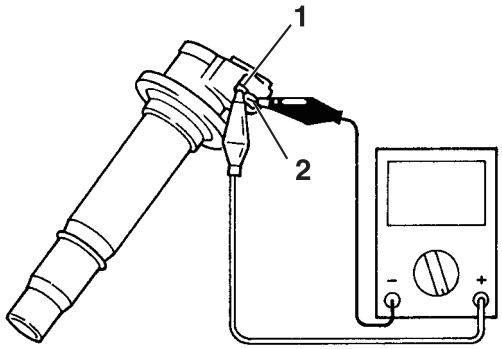

c. Measure the primary coil resistance.

▲▲▲▲▲▲▲▲▲▲▲▲▲▲▲▲▲▲▲▲▲▲▲▲▲▲▲▲▲▲▲▲

2. Check:
   - Secondary coil resistance
     Out of specification → Replace.

Secondary coil resistance
8.50–11.50 kΩ

▼▼▼▼▼▼▼▼▼▼▼▼▼▼▼▼▼▼▼▼▼▼▼▼▼▼▼▼▼▼▼▼

a. Connect the pocket tester (Ω × 1 k) to the ignition coil as shown.

Pocket tester
90890-03112
Analog pocket tester
YU-03112-C

- Negative tester probe
  Red/Black "1"
- Positive tester probe
  Spark plug terminal "2"

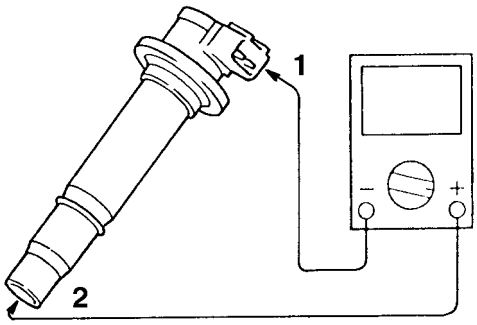

b. Measure the secondary coil resistance.

▲▲▲▲▲▲▲▲▲▲▲▲▲▲▲▲▲▲▲▲▲▲▲▲▲▲▲▲▲▲▲▲

3. Check:
   - Ignition spark gap
     Out of specification → Replace.

Minimum ignition spark gap
6.0 mm (0.24 in)

▼▼▼▼▼▼▼▼▼▼▼▼▼▼▼▼▼▼▼▼▼▼▼▼▼▼▼▼▼▼▼▼

a. Connect the ignition checker "1" as shown.

Ignition checker
90890-06754
Opama pet-4000 spark checker
YM-34487

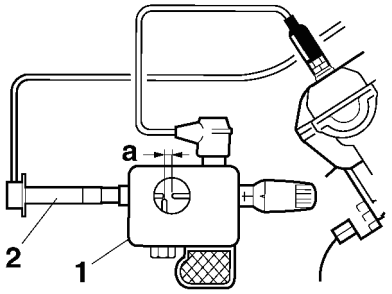

2. Ignition coil

b. Turn the main switch to “ON” and engine stop switch to “◯”.
c. Measure the ignition spark gap “a”.
d. Crank the engine by pushing the start switch “⊛” and gradually increase the spark gap until a misfire occurs.

▲▲▲▲▲▲▲▲▲▲▲▲▲▲▲▲▲▲▲▲▲▲▲▲▲▲▲▲▲▲

EAS28120

CHECKING THE CRANKSHAFT POSITION SENSOR

1. Disconnect:
   - Crankshaft position sensor coupler (from the wire harness)
2. Check:
   - Crankshaft position sensor resistance
     Out of specification → Replace the crankshaft position sensor.

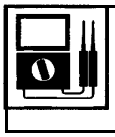

Crankshaft position sensor resistance
248–372 Ω at 20 °C (68 °F)

▼▼▼▼▼▼▼▼▼▼▼▼▼▼▼▼▼▼▼▼▼▼▼▼▼▼▼▼▼▼

a. Connect the pocket tester (Ω × 100) to the crankshaft position sensor coupler as shown.

Pocket tester
90890-03112
Analog pocket tester
YU-03112-C

- Positive tester probe
  Gray “1”
- Negative tester probe
  Black “2”

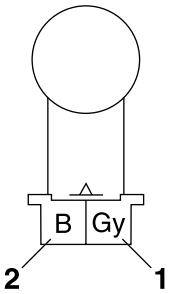

b. Measure the crankshaft position sensor resistance.

▲▲▲▲▲▲▲▲▲▲▲▲▲▲▲▲▲▲▲▲▲▲▲▲▲▲▲▲▲▲

EAS28130

CHECKING THE LEAN ANGLE SENSOR

1. Remove:
   - Lean angle sensor
     (from the battery box 2)
2. Check:
   - Lean angle sensor out put voltage
     Out of specification → Replace.

Lean angle sensor output voltage
Less than 45°: 0.4–1.4 V
More than 45°: 3.7–4.4 V

▼▼▼▼▼▼▼▼▼▼▼▼▼▼▼▼▼▼▼▼▼▼▼▼▼▼▼▼▼▼

a. Connect the test harness-lean angle sensor (6P) “1” to the lean angle sensor and wire harness as shown.
b. Connect the pocket tester (DC 20 V) to the test harness-lean angle sensor (6P).

Pocket tester
90890-03112
Analog pocket tester
YU-03112-C
Test harness-lean angle sensor (6P)
90890-03209
YU-03209

- Positive tester probe
  Yellow/Green (wire harness color)
- Negative tester probe
  Black/Blue (wire harness color)

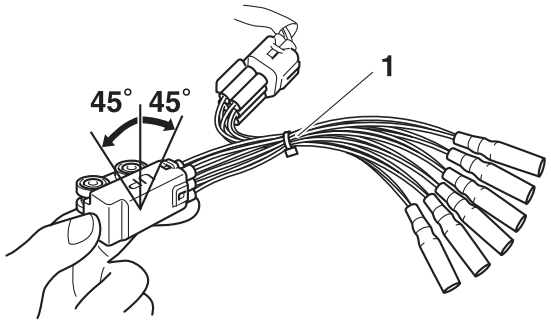

c. Set the main switch to “ON”.
d. Turn the lean angle sensor to 45°.
e. Measure the lean angle sensor output voltage.

▲▲▲▲▲▲▲▲▲▲▲▲▲▲▲▲▲▲▲▲▲▲▲▲▲▲▲▲

EAS28940
CHECKING THE STARTER MOTOR OPERATION

1. Check:
   - Starter motor operation
     Does not operate → Perform the electric starting system troubleshooting, starting with step 4.
     Refer to “TROUBLESHOOTING” on page 8-11.

▼▼▼▼▼▼▼▼▼▼▼▼▼▼▼▼▼▼▼▼▼▼▼▼▼▼▼▼

a. Connect the positive battery terminal “1” and starter motor lead “2” with a jumper lead “3”.

EWA13810
WARNING

- **A wire that is used as a jumper lead must have at least the same capacity of the battery lead, otherwise the jumper lead may burn.**
- **This check is likely to produce sparks, therefore, make sure no flammable gas or fluid is in the vicinity.**

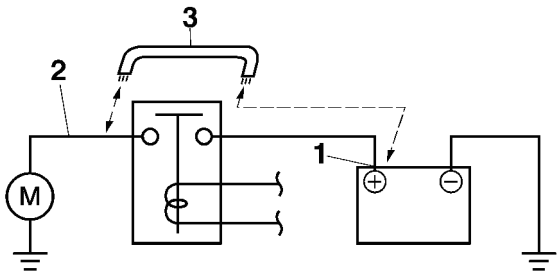

b. Check the starter motor operation.

▲▲▲▲▲▲▲▲▲▲▲▲▲▲▲▲▲▲▲▲▲▲▲▲▲▲▲▲

EAS28150
CHECKING THE STATOR COIL

1. Disconnect:
   - Stator coil coupler
     (from the wire harness)
2. Check:
   - Stator coil resistance
     Out of specification → Replace the stator coil.

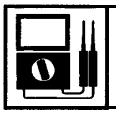

Stator coil resistance
0.112–0.168 Ω at 20 °C (68 °F)

▼▼▼▼▼▼▼▼▼▼▼▼▼▼▼▼▼▼▼▼▼▼▼▼▼▼▼▼

a. Connect the pocket tester (Ω × 1) to the stator coil coupler as shown.

Pocket tester
90890-03112
Analog pocket tester
YU-03112-C

- Positive tester probe
  White “1”
- Negative tester probe
  White “2”

- Positive tester probe
  White “1”
- Negative tester probe
  White “3”

- Positive tester probe
  White “2”
- Negative tester probe
  White “3”

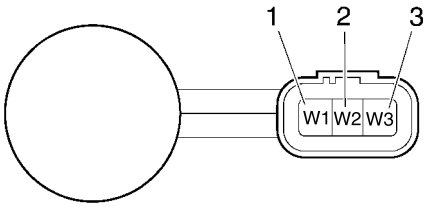

b. Measure the stator coil resistance.

▲▲▲▲▲▲▲▲▲▲▲▲▲▲▲▲▲▲▲▲▲▲▲▲▲▲▲▲

EAS28170
CHECKING THE RECTIFIER/REGULATOR

1. Check:
   - Rectifier/regulator input voltage
     Out of specification → Correct the stator coil condition.
     Refer to "CHECKING THE STATOR COIL" on page 8-118.

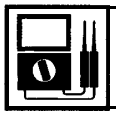

Rectifier/regulator input voltage
above 14 V at 5000 r/min

▼▼▼▼▼▼▼▼▼▼▼▼▼▼▼▼▼▼▼▼▼▼▼▼▼▼▼▼▼▼▼▼

a. Set the engine tachometer to the ignition coil of cylinder #1.
b. Connect the pocket tester (AC 20 V) to the rectifier/regulator coupler as shown.

Pocket tester
90890-03112
Analog pocket tester
YU-03112-C

- Positive tester probe
  White "1"
- Negative tester probe
  White "2"

- Positive tester probe
  White "1"
- Negative tester probe
  White "3"

- Positive tester probe
  White "2"
- Negative tester probe
  White "3"

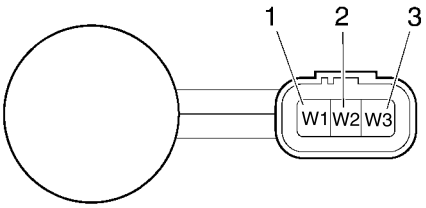

c. Start the engine and let it run at approximately 5000 r/min.
d. Measure the rectifier/regulator input voltage.

▲▲▲▲▲▲▲▲▲▲▲▲▲▲▲▲▲▲▲▲▲▲▲▲▲▲▲▲▲▲▲▲

2. Check:
   - Rectifier/regulator output voltage
     Out of specification → Replace the rectifier/regulator.

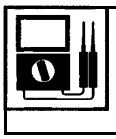

Rectifier/regulator output voltage
14.2–14.8 V

▼▼▼▼▼▼▼▼▼▼▼▼▼▼▼▼▼▼▼▼▼▼▼▼▼▼▼▼▼▼▼▼

a. Set the engine tachometer to the ignition coil of cylinder #1.
b. Connect the pocket tester (DC 20 V) to the rectifier/regulator coupler as shown.

Pocket tester
90890-03112
Analog pocket tester
YU-03112-C

- Positive tester probe
  Red "1"
- Negative tester probe
  Black "2"

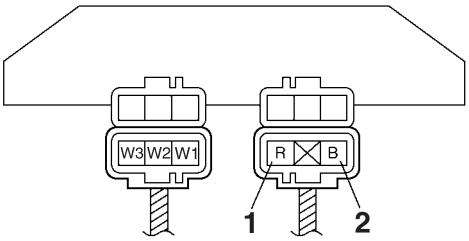

c. Start the engine and let it run at approximately 5000 r/min.
d. Measure the rectifier/regulator output voltage.

▲▲▲▲▲▲▲▲▲▲▲▲▲▲▲▲▲▲▲▲▲▲▲▲▲▲▲▲▲▲▲▲

EAS28180
CHECKING THE HORN

1. Check:
   - Horn resistance
     Out of specification → Replace.

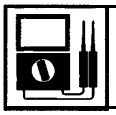

Coil resistance
1.07–1.11 Ω at 20 °C (68 °F)

▼▼▼▼▼▼▼▼▼▼▼▼▼▼▼▼▼▼▼▼▼▼▼▼▼▼▼▼▼▼▼▼

a. Disconnect the horn leads from the horn terminals.

b. Connect the pocket tester (Ω × 1) to the horn terminals.

Pocket tester
90890-03112
Analog pocket tester
YU-03112-C

- Positive tester probe
  Horn terminal "1"
- Negative tester probe
  Horn terminal "2"

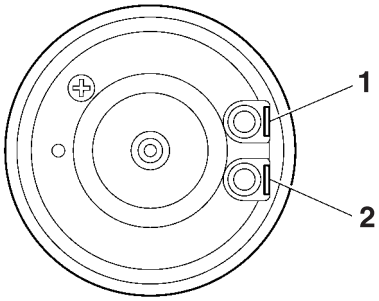

c. Measure the horn resistance.

▲▲▲▲▲▲▲▲▲▲▲▲▲▲▲▲▲▲▲▲▲▲▲▲▲▲▲▲▲▲

2. Check:
   - Horn sound
     Faulty sound → Replace.

EAS28190
CHECKING THE OIL LEVEL SWITCH

1. Drain:
   - Engine oil
2. Remove:
   - Oil level switch
     (from the oil pan)
3. Check:
   - Oil level switch resistance

Oil level switch
Maximum level position resistance
484–536 Ω
Minimum level position resistance
114–126 Ω

▼▼▼▼▼▼▼▼▼▼▼▼▼▼▼▼▼▼▼▼▼▼▼▼▼▼▼▼▼▼

a. Connect the pocket tester (Ω × 100) to the oil level switch terminal as shown.

Pocket tester
90890-03112
Analog pocket tester
YU-03112-C

Minimum level position "A"
- Positive tester probe
  Connector (White) "1"
- Negative tester probe
  Body earth "2"

Maximum level position "B"
- Positive tester probe
  Connector (White) "1"
- Negative tester probe
  Body earth "2"

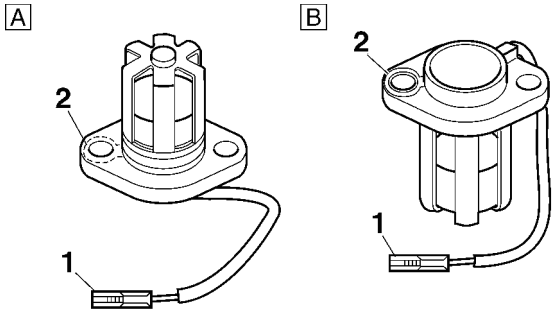

b. Measure the oil level switch resistance.

▲▲▲▲▲▲▲▲▲▲▲▲▲▲▲▲▲▲▲▲▲▲▲▲▲▲▲▲▲▲

EAS14B1035
CHECKING THE FUEL SENDER

1. Disconnect:
   - Fuel pump coupler
   - Fuel sender coupler
     (from the wire harness)
2. Remove:
   - Fuel tank
3. Remove:
   - Fuel pump
     (from the fuel tank)
4. Check:
   - Fuel sender resistance

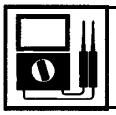

Fuel sender resistance
14–141 Ω at 20 °C (68 °F)

▼▼▼▼▼▼▼▼▼▼▼▼▼▼▼▼▼▼▼▼▼▼▼▼▼▼▼▼▼▼

a. Connect the pocket tester (Ω × 1) to the fuel sender terminal as shown.

Pocket tester
90890-03112
Analog pocket tester
YU-03112-C

- Positive tester probe
  Green/White “1”
- Negative tester probe
  Black “2”

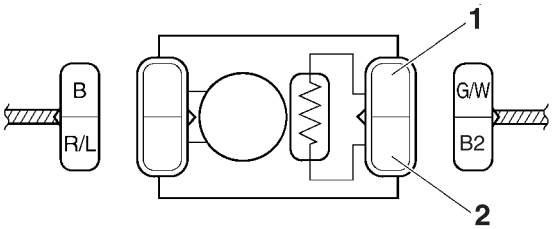

b. Measure the fuel sender resistance.

▲▲▲▲▲▲▲▲▲▲▲▲▲▲▲▲▲▲▲▲▲▲▲▲▲▲▲▲▲▲

EAS28240
CHECKING THE SPEED SENSOR

1. Check:
   - Speed sensor output voltage
     Out of specification → Replace.

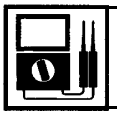

Output voltage reading cycle
0.6 V to 4.8 V to 0.6 V to 4.8 V

▼▼▼▼▼▼▼▼▼▼▼▼▼▼▼▼▼▼▼▼▼▼▼▼▼▼▼▼▼▼

a. Connect the test harness-speed sensor (3P) “1” to the speed sensor coupler and wire harness as shown.
b. Connect the pocket tester (DC 20 V) to the test harness-speed sensor (3P).

Pocket tester
90890-03112
Analog pocket tester
YU-03112-C
Test harness-speed sensor (3P)
90890-03208
YU-03208

- Positive tester probe
  White/Yellow (wire harness color)
- Negative tester probe
  Black/Blue (wire harness color)

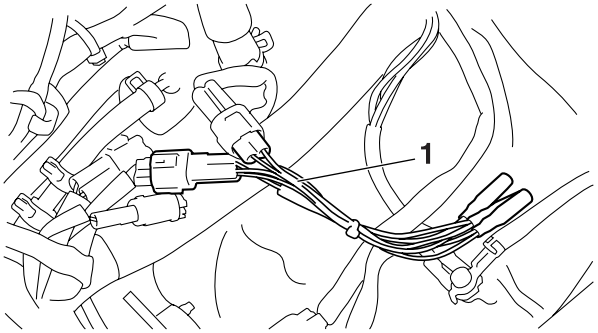

c. Turn the main switch to “ON”.
d. Elevate the rear wheel and slowly rotate it.
e. Measure the voltage. With each full rotation of the rear wheel, the voltage reading should cycle from 0.6 V to 4.8 V to 0.6 V to 4.8 V.

▲▲▲▲▲▲▲▲▲▲▲▲▲▲▲▲▲▲▲▲▲▲▲▲▲▲▲▲▲▲

EAS28250
CHECKING THE RADIATOR FAN MOTOR

1. Check:
   - Radiator fan motor
     Faulty/rough movement → Replace.

▼▼▼▼▼▼▼▼▼▼▼▼▼▼▼▼▼▼▼▼▼▼▼▼▼▼▼▼▼▼

a. Disconnect the radiator fan motor coupler from the wire harness.
b. Connect the battery (DC 12 V) as shown.

- Positive tester probe
  Blue or Green “1”
- Negative tester probe
  Black “2”

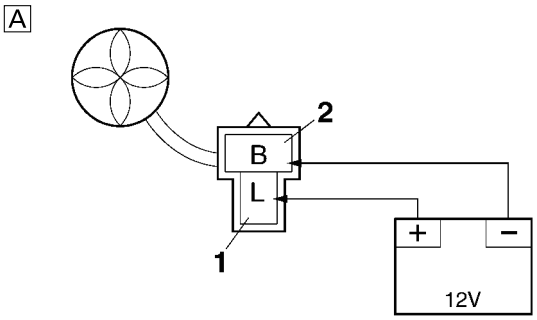

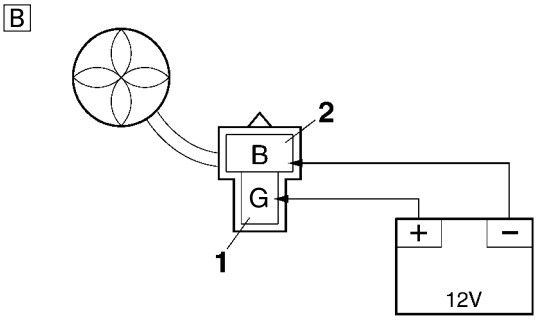

A. Right side
B. Left side

c. Measure the radiator fan motor movement.

▲▲▲▲▲▲▲▲▲▲▲▲▲▲▲▲▲▲▲▲▲▲▲▲▲▲▲▲▲▲

EAS28260

CHECKING THE COOLANT TEMPERATURE SENSOR

1. Remove:
   - Coolant temperature sensor
     Refer to “CYLINDER HEAD” on page 5-25.

EWA14130

WARNING

- **Handle the coolant temperature sensor with special care.**
- **Never subject the coolant temperature sensor to strong shocks. If the coolant temperature sensor is dropped, replace it.**

2. Check:
   - Coolant temperature sensor resistance
     Out of specification → Replace.

Coolant temperature sensor resistance
5.21–6.37 kΩ at 0 °C (32 °F)
2.45 kΩ at 20 °C (68 °F)
290–354 Ω at 80 °C (176 °F)

▼▼▼▼▼▼▼▼▼▼▼▼▼▼▼▼▼▼▼▼▼▼▼▼▼▼▼▼▼▼

a. Connect the pocket tester (Ω × 100) to the coolant temperature sensor as shown.

Pocket tester
90890-03112
Analog pocket tester
YU-03112-C

b. Immerse the coolant temperature sensor “1” in a container filled with coolant “2”.

TIP

Make sure the coolant temperature sensor terminals do not get wet.

c. Place a thermometer “3” in the coolant.
d. Slowly heat the coolant, then let it cool down to the specified temperature.
e. Measure the coolant temperature sensor resistance.

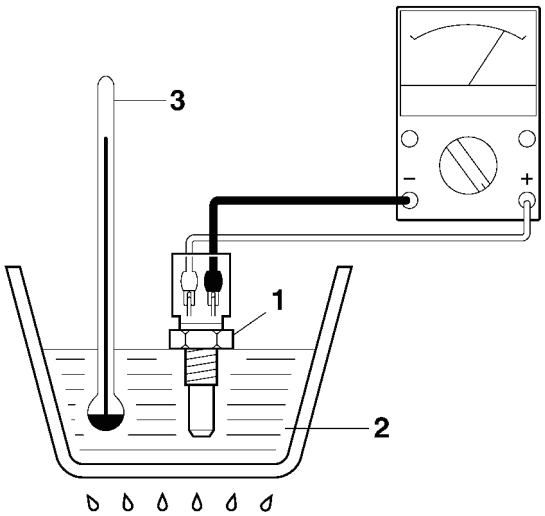

▲▲▲▲▲▲▲▲▲▲▲▲▲▲▲▲▲▲▲▲▲▲▲▲▲▲▲▲▲▲

EAS14B1086

CHECKING THE THROTTLE POSITION SENSOR

1. Remove:
   - Throttle position sensor
     (from the throttle body)
2. Check:
   - Throttle position sensor maximum resistance
     Out of specification → Replace the throttle position sensor.

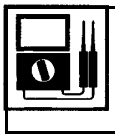

Throttle position sensor resistance
1.2–2.8 kΩ

▼▼▼▼▼▼▼▼▼▼▼▼▼▼▼▼▼▼▼▼▼▼▼▼▼▼▼▼▼▼▼▼

a. Connect the pocket tester (Ω × 1 k) to the throttle position sensor terminal as shown.

Pocket tester
90890-03112
Analog pocket tester
YU-03112-C

- Positive tester probe
  Blue "1"
- Negative tester probe
  Black/Blue "2"

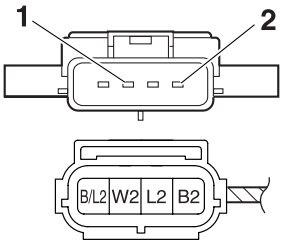

b. Measure the throttle position sensor maximum resistance.

▲▲▲▲▲▲▲▲▲▲▲▲▲▲▲▲▲▲▲▲▲▲▲▲▲▲▲▲▲▲▲▲

3. Install:
   - Throttle position sensor

TIP

When installing the throttle position sensor, adjust its angle properly. Refer to "ADJUSTING THE THROTTLE POSITION SENSOR" on page 7-19.

EAS14B1087

CHECKING THE ACCELERATOR POSITION SENSOR

1. Remove:
   - Accelerator position sensor (from the throttle body)
2. Check:
   - Accelerator position sensor maximum resistance
     Out of specification → Replace the accelerator position sensor.

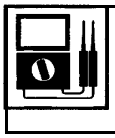

Accelerator position sensor resistance
1.2–2.8 kΩ

▼▼▼▼▼▼▼▼▼▼▼▼▼▼▼▼▼▼▼▼▼▼▼▼▼▼▼▼▼▼▼▼

a. Connect the pocket tester (Ω × 1 k) to the accelerator position sensor terminal as shown.

Pocket tester
90890-03112
Analog pocket tester
YU-03112-C

- Positive tester probe
  Blue "1"
- Negative tester probe
  Black/Blue "2"

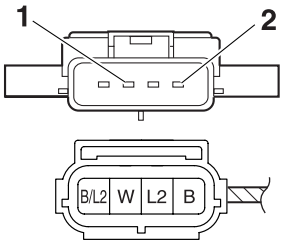

b. Measure the accelerator position sensor maximum resistance.

▲▲▲▲▲▲▲▲▲▲▲▲▲▲▲▲▲▲▲▲▲▲▲▲▲▲▲▲▲▲▲▲

3. Install:
   - Accelerator position sensor

TIP

When installing the accelerator position sensor, adjust its angle properly. Refer to "ADJUSTING THE ACCELERATOR POSITION SENSOR" on page 7-19.

EAS14B1061

CHECKING THE THROTTLE SERVO MOTOR

1. Remove:
   - Air filter case
     Refer to "AIR FILTER CASE" on page 7-5.
2. Check:
   - Throttle servo motor resistance
     Out of specification → Replace the throttle body assembly.

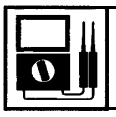

Throttle servo motor resistance
1.23–1.67 Ω

▼▼▼▼▼▼▼▼▼▼▼▼▼▼▼▼▼▼▼▼▼▼▼▼▼▼▼▼▼▼▼▼

a. Disconnect the throttle servo motor coupler from wire harness.

b. Connect the pocket tester (Ω × 1) to the throttle servo motor coupler.

Pocket tester
90890-03112
Analog pocket tester
YU-03112-C

- Positive tester probe
  Yellow/Red "1"
- Negative tester probe
  Light green/Red "2"

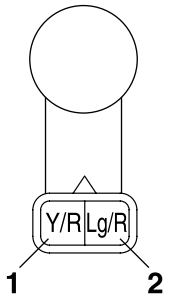

c. Measure the throttle servo motor resistance.

▲▲▲▲▲▲▲▲▲▲▲▲▲▲▲▲▲▲▲▲▲▲▲▲▲▲▲▲▲▲

EAS28370

CHECKING THE AIR INDUCTION SYSTEM SOLENOID

1. Check:
   - Air induction system solenoid resistance
     Out of specification → Replace.

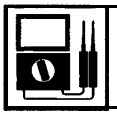

Solenoid resistance
18–22 Ω at 20 °C (68 °F)

▼▼▼▼▼▼▼▼▼▼▼▼▼▼▼▼▼▼▼▼▼▼▼▼▼▼▼▼▼▼

a. Disconnect the air induction system solenoid coupler from the air induction system solenoid.
b. Connect the pocket tester (Ω × 1) to the air induction system solenoid terminal as shown.

Pocket tester
90890-03112
Analog pocket tester
YU-03112-C

- Positive tester probe
  Orange "1"
- Negative tester probe
  Green "2"

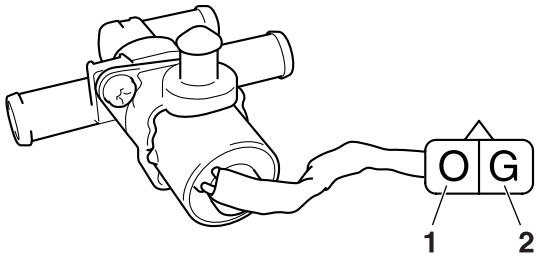

c. Measure the air induction system solenoid resistance.

▲▲▲▲▲▲▲▲▲▲▲▲▲▲▲▲▲▲▲▲▲▲▲▲▲▲▲▲▲▲

EAS28380

CHECKING THE ATMOSPHERIC PRESSURE SENSOR

1. Check:
   - Atmospheric pressure sensor output voltage
     Out of specification → Replace.

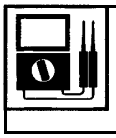

Atmospheric pressure sensor output voltage
3.57–3.71 V at 101.32 kPa

▼▼▼▼▼▼▼▼▼▼▼▼▼▼▼▼▼▼▼▼▼▼▼▼▼▼▼▼▼▼

a. Connect the test harness S-pressure sensor 5S7 (3P) "1" to the atmospheric pressure sensor and wire harness as shown.

ECA14B1035

NOTICE

Pay attention to the installing direction of the test harness S-pressure sensor 5S7 (3P) coupler "a".

b. Connect the digital circuit tester (DCV) to the test harness S-pressure sensor 5S7 (3P).

Digital circuit tester
90890-03174
Model 88 Multimeter with tachometer
YU-A1927
Test harness S-pressure sensor 5S7 (3P)
90890-03211
YU-03211

- Positive tester probe
  Pink (wire harness color)
- Negative tester probe
  Black/blue (wire harness color)

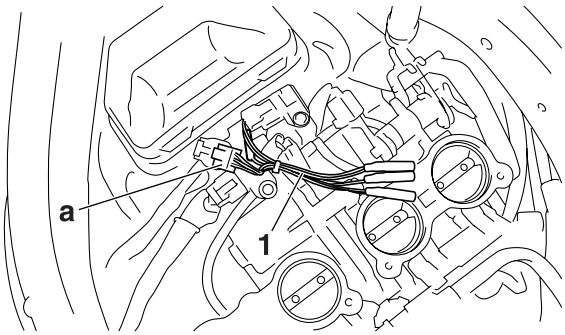

c. Turn the main switch to “ON”.
d. Measure the atmospheric pressure sensor output voltage.

▲▲▲▲▲▲▲▲▲▲▲▲▲▲▲▲▲▲▲▲▲▲▲▲▲▲▲▲▲▲

EAS28390
CHECKING THE CYLINDER IDENTIFICATION SENSOR

1. Remove:
   - Fuel tank
     Refer to “FUEL TANK” on page 7-1.
   - Air filter case
     Refer to “AIR FILTER CASE” on page 7-5.
   - Air filter case duct
     Refer to “AIR INDUCTION SYSTEM” on page 7-21.
2. Check:
   - Cylinder identification sensor output voltage
     Out of specification → Replace.

Cylinder identification sensor output voltage (ON)
Less than 0.8 V
Cylinder identification sensor output voltage (OFF)
More than 4.8 V

▼▼▼▼▼▼▼▼▼▼▼▼▼▼▼▼▼▼▼▼▼▼▼▼▼▼▼▼▼▼

a. Connect the test harness-speed sensor (3P) “1” to the speed sensor coupler and wire harness as shown.
b. Connect the pocket tester (DC 20 V) to the test harness-speed sensor (3P).

Pocket tester
90890-03112
Analog pocket tester
YU-03112-C
Test harness-speed sensor (3P)
90890-03208
YU-03208

- Positive tester probe
  White/Black (wire harness color)
- Negative tester probe
  Black/Blue (wire harness color)

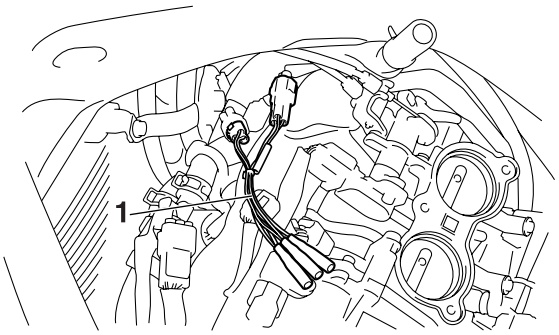

c. Turn the main switch to “ON”.
d. Rotate the crankshaft.
e. Measure the voltage. With each full rotation of the crankshaft, the voltage reading should cycle from 0.8 V to 4.8 V to 0.8 V to 4.8 V.

▲▲▲▲▲▲▲▲▲▲▲▲▲▲▲▲▲▲▲▲▲▲▲▲▲▲▲▲▲▲

EAS28410
CHECKING THE INTAKE AIR PRESSURE SENSOR

1. Check:
   - Intake air pressure sensor output voltage
     Out of specification → Replace.

Intake air pressure sensor output voltage
3.57–3.71 V at 101.32 kPa

▼▼▼▼▼▼▼▼▼▼▼▼▼▼▼▼▼▼▼▼▼▼▼▼▼▼▼▼▼▼

a. Connect the test harness S-pressure sensor 5S7 (3P) “1” to the intake air pressure sensor and wire harness as shown.

ECA14B1035
NOTICE

Pay attention to the installing direction of the test harness S-pressure sensor 5S7 (3P) coupler “a”.

b. Connect the digital circuit tester (DCV) to the test harness S-pressure sensor 5S7 (3P).

Digital circuit tester
90890-03174
Model 88 Multimeter with tachometer
YU-A1927
Test harness S-pressure sensor 5S7 (3P)
90890-03211
YU-03211

- Positive tester probe
  Pink/White (wire harness color)
- Negative tester probe
  Black/Blue (wire harness color)

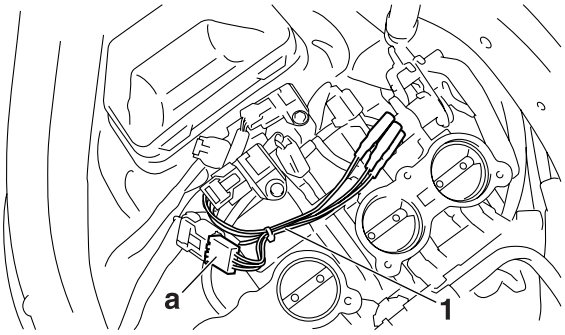

c. Turn the main switch to “ON”.
d. Measure the intake air pressure sensor output voltage.

▲▲▲▲▲▲▲▲▲▲▲▲▲▲▲▲▲▲▲▲▲▲▲▲▲▲▲▲▲▲

EAS28420
CHECKING THE INTAKE AIR TEMPERATURE SENSOR

1. Remove:
   - Intake air temperature sensor
     (from the headlight assembly.)

EWA14110
WARNING

- **Handle the intake air temperature sensor with special care.**
- **Never subject the intake air temperature sensor to strong shocks. If the intake air temperature sensor is dropped, replace it.**

2. Check:
   - Intake air temperature sensor resistance
     Out of specification → Replace.

Intake air temperature sensor resistance
5.4–6.6 kΩ at 0 °C (32 °F)
290–390 Ω at 80 °C (176 °F)

▼▼▼▼▼▼▼▼▼▼▼▼▼▼▼▼▼▼▼▼▼▼▼▼▼▼▼▼▼▼

a. Connect the pocket tester (Ω × 100) to the intake air temperature sensor terminal as shown.

Pocket tester
90890-03112
Analog pocket tester
YU-03112-C

b. Immerse the intake air temperature sensor “1” in a container filled with water “2”.

TIP
Make sure that the intake air temperature sensor terminals do not get wet.

c. Place a thermometer “3” in the water.
d. Slowly heat the water, then let it cool down to the specified temperature.
e. Measure the intake air temperature sensor resistance.

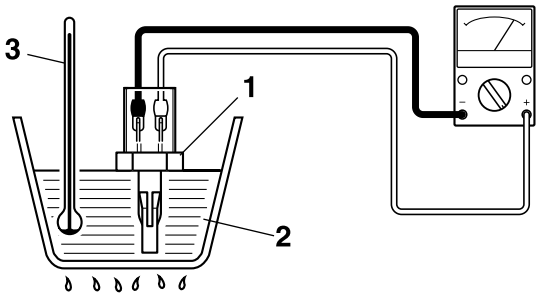

▲▲▲▲▲▲▲▲▲▲▲▲▲▲▲▲▲▲▲▲▲▲▲▲▲▲▲▲▲▲

3. Install:
   - Intake air temperature sensor

Intake air temperature sensor screw
1.5 Nm (0.15 m·kgf, 1.1 ft·lbf)

EAS14B1020
CHECKING THE STEERING DAMPER SOLENOID

1. Remove:
   - Left side cowling
     Refer to “GENERAL CHASSIS” on page 4-1.
2. Check:
   - Steering damper solenoid resistance
     Out of specification → Replace the steering damper assembly.

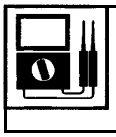

Steering damper solenoid resistance
49.82–56.18 Ω at 20 °C (68 °F)

▼▼▼▼▼▼▼▼▼▼▼▼▼▼▼▼▼▼▼▼▼▼▼▼▼▼▼▼▼▼▼▼▼▼

a. Disconnect the steering damper lead coupler from wire harness.
b. Connect the pocket tester (Ω × 1) to the steering damper lead coupler.

Pocket tester
90890-03112
Analog pocket tester
YU-03112-C

- Positive tester probe
  Black "1"
- Negative tester probe
  Black "2"

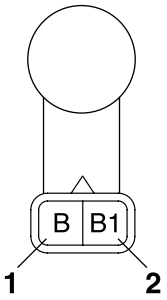

c. Measure the steering damper solenoid resistance.

▲▲▲▲▲▲▲▲▲▲▲▲▲▲▲▲▲▲▲▲▲▲▲▲▲▲▲▲▲▲▲▲▲▲

EAS14B1055

CHECKING THE GEAR POSITION SENSOR

1. Remove:
   - Fuel tank
     Refer to "FUEL TANK" on page 7-1.
   - Gear position sensor
     Refer to "CRANKCASE" on page 5-71.
2. Check:
   - Gear position sensor
     Out of specification → Replace the gear position sensor.

Pocket tester
90890-03112
Analog pocket tester
YU-03112-C

Result
Neutral position
Continuity
Positive tester probe
Sky blue "1"
Negative tester probe
Sensor terminal "a"
1st position
Continuity
Positive tester probe
White "2"
Negative tester probe
Sensor terminal "b"
2nd position
Continuity
Positive tester probe
Pink "3"
Negative tester probe
Sensor terminal "c"
3rd position
Continuity
Positive tester probe
Yellow/White "4"
Negative tester probe
Sensor terminal "d"
4th position
Continuity
Positive tester probe
White/Red "5"
Negative tester probe
Sensor terminal "e"
5th position
Continuity
Positive tester probe
Orange "6"
Negative tester probe
Sensor terminal "f"
6th position
Continuity
Positive tester probe
Gray "7"
Negative tester probe
Sensor terminal "g"

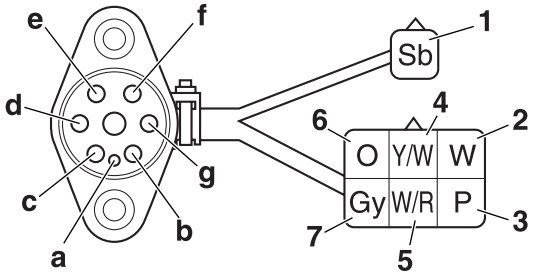

EAS14B1101
CHECKING THE FUEL INJECTORS

1. Remove:
   - Fuel tank
     Refer to “FUEL TANK” on page 7-1.
   - Air filter upper cover (for secondary injector)
     Refer to “AIR FILTER CASE” on page 7-5.
2. Check:
   - Fuel injector resistance
     Out of specification → Replace the fuel injector.

Fuel injector resistance (Primary injector/Secondary injector)
12.0 Ω at 20 °C (68 °F)

▼▼▼▼▼▼▼▼▼▼▼▼▼▼▼▼▼▼▼▼▼▼▼▼▼▼▼▼▼▼▼▼▼▼

a. Disconnect the fuel injector lead coupler from wire harness.
b. Connect the pocket tester (Ω × 1) to the fuel injector coupler.

Pocket tester
90890-03112
Analog pocket tester
YU-03112-C

- Positive tester probe
  Injector terminal “1”
- Negative tester probe
  Injector terminal “2”

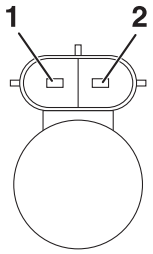

c. Measure the fuel injector resistance.

▲▲▲▲▲▲▲▲▲▲▲▲▲▲▲▲▲▲▲▲▲▲▲▲▲▲▲▲▲▲▲▲▲▲

TROUBLESHOOTING

EAS28451
TROUBLESHOOTING

EAS28460
GENERAL INFORMATION

TIP

The following guide for troubleshooting does not cover all the possible causes of trouble. It should be helpful, however, as a guide to basic troubleshooting. Refer to the relative procedure in this manual for checks, adjustments, and replacement of parts.

EAS28470
STARTING FAILURES

Engine

1. Cylinder(s) and cylinder head
   - Loose spark plug
   - Loose cylinder head or cylinder
   - Damaged cylinder head gasket
   - Damaged cylinder gasket
   - Worn or damaged cylinder
   - Incorrect valve clearance
   - Improperly sealed valve
   - Incorrect valve-to-valve-seat contact
   - Incorrect valve timing
   - Faulty valve spring
   - Seized valve
2. Piston(s) and piston ring(s)
   - Improperly installed piston ring
   - Damaged, worn or fatigued piston ring
   - Seized piston ring
   - Seized or damaged piston
3. Air filter
   - Improperly installed air filter
   - Clogged air filter element
4. Crankcase and crankshaft
   - Improperly assembled crankcase
   - Seized crankshaft

Fuel system

1. Fuel tank
   - Empty fuel tank
   - Clogged fuel filter
   - Clogged fuel strainer
   - Clogged fuel tank overflow hose
   - Clogged rollover valve (for California)
   - Clogged fuel tank breather hose (for California)
   - Deteriorated or contaminated fuel
2. Fuel pump
   - Faulty fuel pump
   - Faulty fuel pump relay
3. Throttle body(-ies)
   - Deteriorated or contaminated fuel
   - Sucked-in air

Electrical system

1. Battery
   - Discharged battery
   - Faulty battery
2. Fuse(s)
   - Blown, damaged or incorrect fuse
   - Improperly installed fuse
3. Spark plug(s)
   - Incorrect spark plug gap
   - Incorrect spark plug heat range
   - Fouled spark plug
   - Worn or damaged electrode
   - Worn or damaged insulator
4. Ignition coil(s)
   - Cracked or broken ignition coil body
   - Broken or shorted primary or secondary coils
5. Ignition system
   - Faulty ECU
   - Faulty crankshaft position sensor
   - Faulty cylinder identification sensor
6. Switches and wiring
   - Faulty main switch
   - Faulty engine stop switch
   - Broken or shorted wiring
   - Faulty gear position sensor
   - Faulty start switch
   - Faulty sidestand switch
   - Faulty clutch switch
   - Improperly grounded circuit
   - Loose connections
7. Starting system
   - Faulty starter motor
   - Faulty starter relay
   - Faulty starting circuit cut-off relay
   - Faulty starter clutch

EAS28490
INCORRECT ENGINE IDLING SPEED

Engine

1. Cylinder(s) and cylinder head
   - Incorrect valve clearance
   - Damaged valve train components
2. Air filter
   - Clogged air filter element

Fuel system
1. Throttle body(-ies)
   - Damaged or loose throttle body joint
   - Improperly synchronized throttle bodies
   - Improper throttle cable free play
   - Flooded throttle body
   - Faulty air induction system

Electrical system
1. Battery
   - Discharged battery
   - Faulty battery
2. Spark plug(s)
   - Incorrect spark plug gap
   - Incorrect spark plug heat range
   - Fouled spark plug
   - Worn or damaged electrode
   - Worn or damaged insulator
3. Ignition coil(s)
   - Broken or shorted primary or secondary coils
   - Cracked or broken ignition coil
4. Ignition system
   - Faulty ECU
   - Faulty crankshaft position sensor
   - Faulty cylinder identification sensor

EAS28520
POOR MEDIUM-AND-HIGH-SPEED PERFORMANCE
Refer to “STARTING FAILURES” on page 9-1.

Engine
1. Air filter
   - Clogged air filter element
   - Faulty YCC-T and YCC-I

Fuel system
1. Fuel pump
   - Faulty fuel pump

EAS28530
FAULTY GEAR SHIFTING

Shifting is difficult
Refer to “Clutch drags”.

EAS28540
SHIFT PEDAL DOES NOT MOVE

Shift shaft
- Improperly adjusted shift rod
- Bent shift shaft

Shift drum and shift forks
- Foreign object in a shift drum groove
- Seized shift fork
- Bent shift fork guide bar

Transmission
- Seized transmission gear
- Foreign object between transmission gears
- Improperly assembled transmission

EAS28550
JUMPS OUT OF GEAR

Shift shaft
- Incorrect shift pedal position
- Improperly returned stopper lever

Shift forks
- Worn shift fork

Shift drum
- Incorrect axial play
- Worn shift drum groove

Transmission
- Worn gear dog

EAS28570
FAULTY CLUTCH

Clutch slips
1. Clutch
   - Improperly assembled clutch
   - Improperly adjusted clutch cable
   - Loose or fatigued clutch spring
   - Worn friction plate
   - Worn clutch plate
2. Engine oil
   - Incorrect oil level
   - Incorrect oil viscosity (low)
   - Deteriorated oil

Clutch drags
1. Clutch
   - Unevenly tensioned clutch springs
   - Warped pressure plate
   - Bent clutch plate
   - Swollen friction plate
   - Bent clutch pull rod
   - Damaged clutch boss
   - Burnt primary driven gear bushing
   - Match marks not aligned
2. Engine oil
   - Incorrect oil level
   - Incorrect oil viscosity (high)
   - Deteriorated oil

EAS28600
OVERHEATING

Engine
1. Clogged coolant passages
   - Cylinder head and piston(s)
   - Heavy carbon buildup
2. Engine oil
   - Incorrect oil level
   - Incorrect oil viscosity
   - Inferior oil quality

Cooling system
1. Coolant
   - Low coolant level
2. Radiator
   - Damaged or leaking radiator
   - Faulty radiator cap
   - Bent or damaged radiator fin
3. Water pump
   - Damaged or faulty water pump
   - Thermostat
   - Thermostat stays closed
4. Oil cooler
   - Clogged or damaged oil cooler
5. Hose(s) and pipe(s)
   - Damaged hose
   - Improperly connected hose
   - Damaged pipe
   - Improperly connected pipe

Fuel system
1. Throttle body(-ies)
   - Faulty throttle body(-ies)
   - Damaged or loose throttle body joint
2. Air filter
   - Clogged air filter element

Chassis
1. Brake(s)
   - Dragging brake

Electrical system
1. Spark plug(s)
   - Incorrect spark plug gap
   - Incorrect spark plug heat range
2. Ignition system
   - Faulty ECU

EAS28610
OVERCOOLING

Cooling system
1. Thermostat
   - Thermostat stays open

EAS28620
POOR BRAKING PERFORMANCE
- Worn brake pad
- Worn brake disc
- Air in hydraulic brake system
- Leaking brake fluid
- Faulty brake caliper kit
- Faulty brake caliper seal
- Loose union bolt
- Damaged brake hose
- Oil or grease on the brake disc
- Oil or grease on the brake pad
- Incorrect brake fluid level

EAS28650
FAULTY FRONT FORK LEGS

Leaking oil
- Bent, damaged or rusty inner tube
- Cracked or damaged outer tube
- Improperly installed oil seal
- Damaged oil seal lip
- Incorrect oil level (high)
- Loose damper rod assembly
- Cracked or damaged cap bolt O-ring

Malfunction
- Bent or damaged inner tube
- Bent or damaged outer tube
- Damaged fork spring
- Worn or damaged outer tube bushing
- Bent or damaged damper rod
- Incorrect oil viscosity
- Incorrect oil level

EAS28680
UNSTABLE HANDLING
1. Handlebars
   - Bent or improperly installed right handlebar
   - Bent or improperly installed left handlebar
2. Steering head components
   - Improperly installed upper bracket
   - Improperly installed lower bracket (improperly tightened ring nut)
   - Bent steering stem
   - Damaged ball bearing or bearing race
3. Front fork leg(s)
   - Uneven oil levels (both front fork legs)
   - Unevenly tensioned fork spring (both front fork legs)
   - Broken fork spring
   - Bent or damaged inner tube
   - Bent or damaged outer tube

4. Swingarm
   - Worn bearing or bushing
   - Bent or damaged swingarm
5. Rear shock absorber assembly(-ies)
   - Faulty rear shock absorber spring
   - Leaking oil or gas
6. Tire(s)
   - Uneven tire pressures (front and rear)
   - Incorrect tire pressure
   - Uneven tire wear
7. Wheel(s)
   - Incorrect wheel balance
   - Deformed cast wheel
   - Damaged wheel bearing
   - Bent or loose wheel axle
   - Excessive wheel runout
8. Frame
   - Bent frame
   - Damaged steering head pipe
   - Improperly installed bearing race

EAS28710

FAULTY LIGHTING OR SIGNALING SYSTEM

Headlight does not come on
- Wrong headlight bulb
- Too many electrical accessories
- Hard charging
- Incorrect connection
- Improperly grounded circuit
- Poor contacts (main or light switch)
- Burnt-out headlight bulb

Headlight bulb burnt out
- Wrong headlight bulb
- Faulty battery
- Faulty rectifier/regulator
- Improperly grounded circuit
- Faulty main switch
- Headlight bulb life expired

Turn signal does not come on
- Faulty turn signal switch
- Faulty turn signal relay
- Burnt-out turn signal bulb
- Incorrect connection
- Damaged or faulty wire harness
- Improperly grounded circuit
- Faulty battery
- Blown, damaged or incorrect fuse

Turn signal blinks slowly
- Faulty turn signal relay
- Faulty main switch
- Faulty turn signal switch
- Incorrect turn signal bulb

Turn signal remains lit
- Faulty turn signal relay
- Burnt-out turn signal bulb

Turn signal blinks quickly
- Incorrect turn signal bulb
- Faulty turn signal relay
- Burnt-out turn signal bulb

Horn does not sound
- Improperly adjusted horn
- Damaged or faulty horn
- Faulty main switch
- Faulty horn switch
- Faulty battery
- Blown, damaged or incorrect fuse
- Faulty wire harness

EAS28740

WIRING DIAGRAM YZFR1Y(C)

1. Main switch
2. AC magneto
3. Rectifier/regulator
4. Main fuse
5. Backup fuse
6. ETV (Electronic Throttle Valve) fuse
7. Battery
8. Fuel injection system fuse
9. Starter relay
10. Starter motor
11. Relay unit
12. Starting circuit cut-off relay
13. Fuel pump relay
14. Sidestand switch
15. Fuel pump
16. Fuel sender
17. Throttle position sensor
18. Accelerator position sensor
19. O_2 sensor
20. ECU (engine control unit)
21. Ignition coil #1
22. Ignition coil #2
23. Ignition coil #3
24. Ignition coil #4
25. Spark plug
26. Primary injector #1
27. Primary injector #2
28. Primary injector #3
29. Primary injector #4
30. Secondary injector #1
31. Secondary injector #2
32. Secondary injector #3
33. Secondary injector #4
34. Air induction system solenoid
35. Intake funnel servo motor
36. Throttle servo motor
37. Steering damper solenoid
38. Speed sensor
39. Intake air temperature sensor
40. Crankshaft position sensor
41. Coolant temperature sensor
42. Intake air pressure sensor
43. Atmospheric pressure sensor
44. Cylinder identification sensor
45. Lean angle sensor
46. Meter assembly
47. Fuel level warning light
48. Oil level warning light
49. Neutral indicator light
50. Tachometer
51. Shift timing indicator light
52. Multi-function meter
53. Transmission gear display
54. Steering damper warning light
55. Engine trouble warning light
56. Coolant temperature warning light
57. High beam indicator light
58. Left turn signal indicator light
59. Right turn signal indicator light
60. Meter light
61. Oil level switch
62. Right handlebar switch
63. D-Mode switch
64. Front brake light switch
65. Engine stop switch
66. Start switch
67. Gear position sensor
68. Turn signal relay
69. Left handlebar switch
70. Dimmer switch
71. Horn switch
72. Clutch switch
73. Turn signal switch
74. Horn
75. Front left turn signal/position light
76. Front right turn signal/position light
77. Rear left turn signal light
78. Rear right turn signal light
79. Headlight
80. Auxiliary light
81. Ground (cord headlight)
82. License plate light
83. Rear brake light switch
84. Tail/brake light
85. Headlight relay
86. Radiator fan motor relay
87. Right radiator fan motor fuse
88. Left radiator fan motor fuse
89. Right radiator fan motor
90. Left radiator fan motor
91. Headlight fuse
92. Signal fuse
93. Steering damper fuse
94. Ignition fuse
95. Engine ground
96. Battery negative lead

EAS28750

COLOR CODE

B	Black
Br	Brown
Ch	Chocolate
Dg	Dark green
G	Green
Gy	Gray
L	Blue
Lg	Light green
O	Orange
P	Pink
R	Red
Sb	Sky blue
V	Violet
W	White
Y	Yellow
B/G	Black/Green
B/L	Black/Blue
B/R	Black/Red
B/W	Black/White
B/Y	Black/Yellow
Br/B	Brown/Black
Br/G	Brown/Green
Br/L	Brown/Blue
Br/R	Brown/Red
Br/W	Brown/White
Br/Y	Brown/Yellow
G/B	Green/Black
G/W	Green/White
G/Y	Green/Yellow
Gy/G	Gray/Green
Gy/R	Gray/Red
L/B	Blue/Black
L/R	Blue/Red
L/W	Blue/White
L/Y	Blue/Yellow
Lg/R	Light green/Red
O/B	Orange/Black
O/G	Orange/Green
P/B	Pink/Black
P/W	Pink/White
R/B	Red/Black
R/G	Red/Green
R/L	Red/Blue
R/W	Red/White
R/Y	Red/Yellow
Sb/W	Sky blue/White
W/B	White/Black
W/G	White/Green
W/L	White/Blue
W/R	White/Red
W/Y	White/Yellow
Y/R	Yellow/Red
Y/B	Yellow/Black
Y/G	Yellow/Green
Y/L	Yellow/Blue
Y/W	Yellow/White

YAMAHA MOTOR CO., LTD.
2500 SHINGAI IWATA SHIZUOKA JAPAN

WIRING DIAGRAM
YZFR1Y(C)

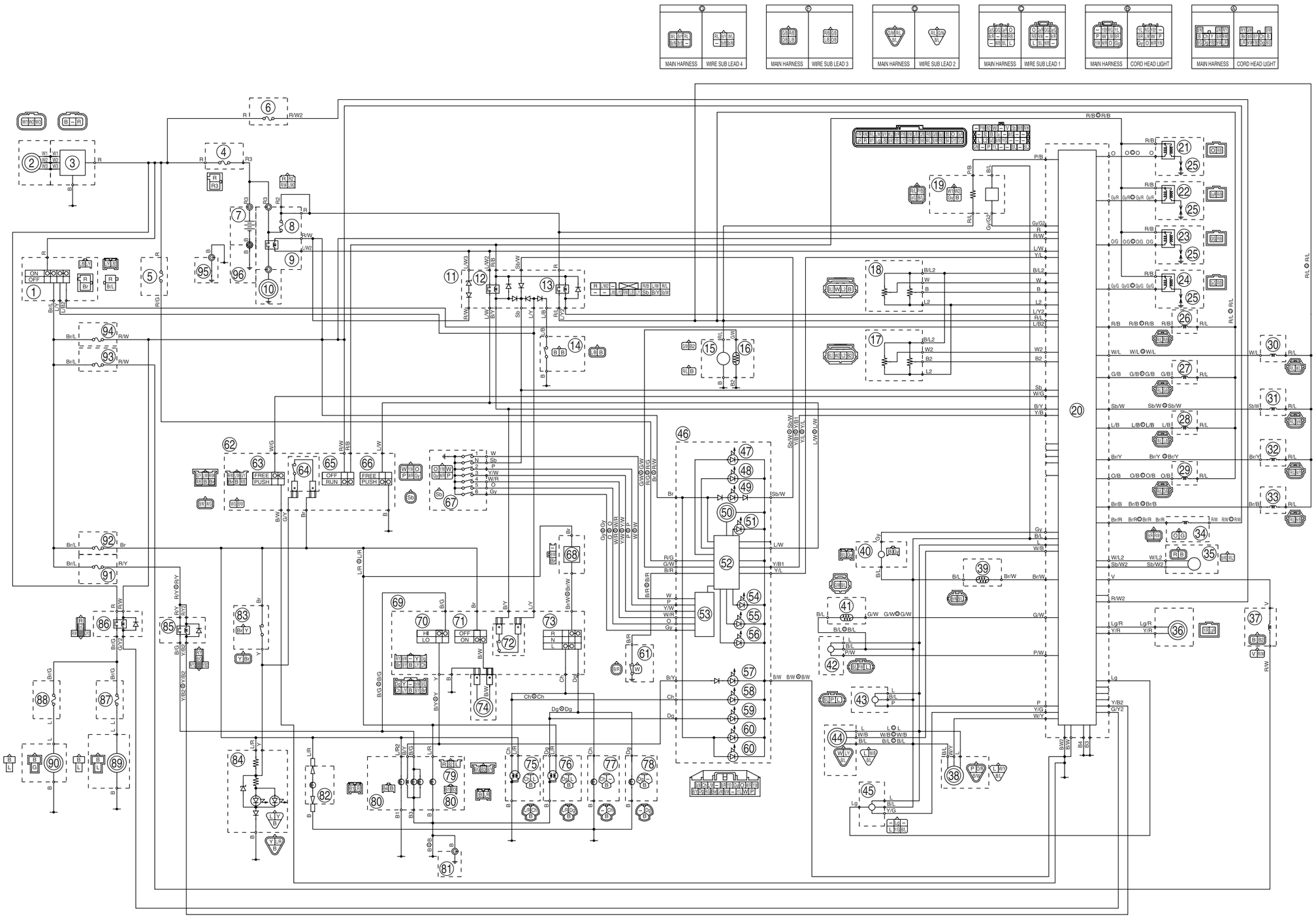

WIRING DIAGRAM
YZFR1Y(C)