NISSAN TRUCK

MODEL D21 SERIES

QUICK REFERENCE INDEX

GENERAL INFORMATION	GI
MAINTENANCE	MA
ENGINE MECHANICAL	EM
ENGINE LUBRICATION & COOLING SYSTEMS	LC
ENGINE CONTROL SYSTEM	EC
ACCELERATOR CONTROL, FUEL & EXHAUST SYSTEMS	FE
CLUTCH	CL
MANUAL TRANSMISSION	MT
AUTOMATIC TRANSMISSION	AT
TRANSFER	TF
PROPELLER SHAFT & DIFFERENTIAL CARRIER	PD
FRONT AXLE & FRONT SUSPENSION	FA
REAR AXLE & REAR SUSPENSION	RA
BRAKE SYSTEM	BR
STEERING SYSTEM	ST
RESTRAINT SYSTEM	RS
BODY & TRIM	BT
HEATER & AIR CONDITIONER	HA
ELECTRICAL SYSTEM	EL
ALPHABETICAL INDEX	IDX

© 1996 NISSAN NORTH AMERICA, INC. Printed in U.S.A.
All rights reserved. No part of this Service Manual may be reproduced or stored in a retrieval system, or transmitted in any form, or by any means, electronic, mechanical, photocopying, recording or otherwise, without the prior written permission of Nissan North America, Inc., Torrance, California.

FOREWORD

This manual contains maintenance and repair procedures for the 1997 Nissan TRUCK.

In order to assure your safety and the efficient functioning of the vehicle, this manual should be read thoroughly. It is especially important that the PRECAUTIONS in the GI section be completely understood before starting any repair task.

All information in this manual is based on the latest product information at the time of publication. The right is reserved to make changes in specifications and methods at any time without notice.

IMPORTANT SAFETY NOTICE

The proper performance of service is essential for both the safety of the technician and the efficient functioning of the vehicle.
The service methods in this Service Manual are described in such a manner that the service may be performed safely and accurately.
Service varies with the procedures used, the skills of the technician and the tools and parts available. Accordingly, anyone using service procedures, tools or parts which are not specifically recommended by NISSAN must first be completely satisfied that neither personal safety nor the vehicle's safety will be jeopardized by the service method selected.

NISSAN NORTH AMERICA, INC.
Technical Service Information Department
Torrance, California

PLEASE HELP MAKE THIS SERVICE MANUAL BETTER!

Your comments are important to NISSAN and will help us to improve our Service Manuals.
Use this form to report any issues or comments you may have regarding our Service Manuals.
Please photocopy this form and type or print your comments below. Mail or fax to:

Nissan North America, Inc.
Technical Service Information
39001 Sunrise Drive, P.O. Box 9200
Farmington Hills, MI USA 48331
FAX: (810) 488-3910

SERVICE MANUAL: Model:_____ **Year:**_____

PUBLICATION NO. (Please photocopy back cover):_____

VEHICLE INFORMATION VIN:_____ **Production Date:**_____

Please describe any issues or problems in detail:

Page number(s)_____ *Note: Please include a copy of each page, marked with your comments.*

_____

_____

_____

_____

_____

_____

Are the trouble diagnosis procedures logical and easy to use? (circle your answer) YES NO

If no, what page number(s)?_____*Note: Please include a copy of each page, marked with your comments.*

Please describe the issue or problem in detail:_____

_____

_____

_____

Is the organization of the manual clear and easy to follow? (circle your answer) YES NO

Please comment:_____

_____

_____

_____

_____

What information should be included in NISSAN Service Manuals to better support you in servicing or repairing customer vehicles?

_____

_____

_____

_____

DATE:_____ YOUR NAME:_____ POSITION:_____

DEALER:_____ DEALER NO.:_____ ADDRESS:_____

CITY:_____ STATE/PROV./COUNTRY:_____ ZIP/POSTAL CODE:_____

QUICK REFERENCE CHART: TRUCK [ ] 1997

ENGINE TUNE-UP DATA

Engine model		KA24E		
Firing order		1-3-4-2		
Idle speed rpm				
M/T		800 ± 50		
A/T (in "N" position)		800 ± 50		
Ignition timing (degree B.T.D.C. at idle speed)		10° ± 2°		
CO% at idle		Idle mixture screw is preset and sealed at factory		
Spark plug				
Type	Standard	ZFR5E-11		
	Cold	ZFR6E-11		
	Hot	ZFR4E-11		
Gap mm (in)		1.0 - 1.1 (0.039 - 0.043)		
Drive belt deflection (Cold) mm (in)		Used belt		
		Limit	Deflection after adjustment	Deflection of new belt
Generator		17 (0.67)	10 - 12 (0.39 - 0.47)	8 - 10 (0.31 - 0.39)
Air conditioner compressor		16 (0.63)	10 - 12 (0.39 - 0.47)	8 - 10 (0.31 - 0.39)
Power steering oil pump		15 (0.59)	9 - 11 (0.35 - 0.43)	7 - 9 (0.28 - 0.35)
Applied pressed force N (kg, lb)		98 (10, 22)		
Radiator cap relief pressure kPa (kg/cm^2, psi)		78 - 98 (0.8 - 1.0, 11 - 14)		
Cooling system leakage testing pressure kPa (kg/cm^2, psi)		157 (1.6, 23)		
Compression pressure kPa (kg/cm2, psi)/rpm	Standard	1,324 (13.5, 192)/300		
	Minimum	981 (10, 142)/300		
Tightening torque		N·m	kg·m	ft-lb
Spark plug		20 - 29	2.0 - 3.0	14 - 22
Oil pan drain plug		29 - 39	3.0 - 4.0	22 - 29

FRONT WHEEL ALIGNMENT (Unladen*1)

	ALLOWABLE LIMIT		ADJUSTING RANGE	
Applied model	2WD	4WD	2WD	4WD
Camber degree (Decimal degree)	−0°20' - 1°10' (−0.33° - 1.17°)	−0°05' - 1°25' (−0.08° - 1.42°)	−0°05' - 0°55' (−0.08° - 0.92°)	0°10' - 1°10' (0.17° - 1.17°)
Caster degree (Decimal degree)	−0°23' - 1°07' (−0.38° - 1.12°)	0°33' - 2°03' (0.55° - 2.05°)	−0°08' - 0°52' (−0.13° - 0.87°)	0°48' - 1°48' (0.80° - 1.80°)
Kingpin inclination degree (Decimal degree)	8°20' - 9°50' (8.33° - 9.83°)	7°21' - 8°51' (7.35° - 8.85°)	8°35' - 9°35' (8.58° - 9.58°)	7°36' - 8°36' (7.60° - 8.60°)
Toe-in				
Radial tire				
A – B mm (in)	1 - 5 (0.04 - 0.20)	2 - 6 (0.08 - 0.24)	2 - 4 (0.08 - 0.16)	3 - 5 (0.12 - 0.20)
Total angle 2β degree (Decimal degree)	5' - 25' (0.08° - 0.42°)	9' - 29' (0.15° - 0.48°)	10' - 20' (0.17° - 0.33°)	14' - 24' (0.23° - 0.40°)
Wheel turning angle				
Inside				
Degree minute (Decimal degree)	34°00' - 38°00' (34.00° - 38.00°)	31°00' - 35°00' (31.00° - 35.00°)	36°00' - 38°00' (36.00° - 38.00°)	33°00' - 35°00' (33.00° - 35.00°)
Outside				
Degree minute (Decimal degree)	31°00' - 35°00' (31.00° - 35.00°)	29°00' - 33°00' (29.00° - 33.00°)	33°00' - 35°00' (33.00° - 35.00°)	31°00' - 33°00' (31.00° - 33.00°)

*1: Fuel, radiator coolant and engine oil full.
Spare tire, jack, hand tools and mats in designated positions.

CLUTCH PEDAL

Unit: mm (in)

Pedal height	236 - 246 (9.29 - 9.69)
Pedal free play	9 - 16 (0.35 - 0.63)

BRAKE

Unit: mm (in)

Disc brake	
Pad minimum thickness	2.0 (0.079)
Rotor repair limit	
Runout	0.07 (0.0028) or less
Minimum thickness	20.0 (0.787), CL28VA 24.0 (0.945), CL28VD
Drum brake	
Lining minimum thickness	1.5 (0.059)
Drum repair limit	
Maximum inner diameter	261.5 (10.30), LT26B 296.5 (11.67), LT30B
Parking brake	
Number of notches*1	10 - 12

*1: At pulling force: 196 N (20 kg, 44 lb)

FRONT WHEEL BEARING

Item	Model			
	2WD		4WD	
Tightening torque N·m (kg·m, ft-lb)	34 - 39 (3.5 - 4.0, 25 - 29)		–	
Return angle degree	45° - 60°		–	
Preload (At hub bolt) N (kg, lb)	New seal	9.8 - 28.4 (1.0 - 2.9, 2.2 - 6.4)	Wheel bearing lock nut Tightening torque N·m (kg·m, ft-lb)	78 - 98 (8 - 10, 58 - 72)
			Retightening torque after loosening wheel bearing lock nut N·m (kg·m, ft-lb)	0.5 - 1.5 (0.05 - 0.15, 0.4 - 1.1)
			Axial end play mm (in)	0 (0)
	Used seal	9.8 - 23.5 (1.0 - 2.4, 2.2 - 5.3)	Start force at wheel hub bolt N (kg, lb)	A
			Turning angle degree	15° - 30°
			Starting force at wheel hub bolt N (kg, lb)	B
			Wheel bearing preload at wheel hub bolt B – A N (kg, lb)	7.06 - 20.99 (0.72 - 2.14, 1.59 - 4.72)

REFILL CAPACITIES

Unit			Liter	US measure
Fuel tank			60	15.9 gal
Coolant (with reservoir)		2WD	8.1	8-5/8 qt
		4WD	9.0	9-1/2 qt
Engine	2WD	With oil filter	3.9	4-1/8 qt
		Without oil filter	3.5	3-3/4 qt
	4WD	With oil filter	4.1	4-3/8 qt
		Without oil filter	3.8	4 qt
Transaxle	M/T	2WD	2.0	4-1/4 pt
		4WD	4.9	10-3/8 pt
	A/T	–	7.9	8-3/8 qt
Transfer		4WD	2.2	2-3/8 qt
Final drive	2WD	H190A	1.5	3-1/8 pt
		C200	1.3	2-3/4 pt
	4WD	R180A	1.3	2-3/4 pt
		H233B	2.8	5-7/8 pt
Manual steering system			0.62	1-3/8 pt
Power steering system		PB48S	0.9	1 qt
		PB59K	1.0	1-1/8 qt
Air conditioner system		Lubricant	0.2	6.8 fl oz
		Refrigerant*	0.75 - 0.85	1.65 - 1.87 lb

*R-134a

TEST VALUE AND TEST LIMIT (GST ONLY — NOT APPLICABLE TO CONSULT-II)

The following is the information specified in Mode 6 of SAE J1979.
The test value is a parameter used to determine whether a system/circuit diagnostic test is “OK” or “NG” while being monitored by the ECM during self-diagnosis. The test limit is a reference value which is specified as the maximum or minimum value and is compared with the test value being monitored.
Items for which these data (test value and test limit) are displayed are the same as SRT code items.
These data (test value and test limit) are specified by Test ID (TID) and Component ID (CID) and can be displayed on the GST screen.

: Applicable ·: Not applicable

SRT item	Self-diagnostic test item	DTC	Test value (GST display)		Te s t limit	Application	Unit
			TID	CID			
CATALYST	Three way catalyst function	P0420	01H	01H	Max.	X	–
		P0420*1	02H	81H	Min.	X	–
EVAP SYSTEM	EVAP control system (Small leak)	P0440	05H	03H	Max.	X	–
	EVAP control system purge flow monitoring	P1447	06H	83H	Min.	X	mV
HO2S	Heated oxygen sensor 1	P0130	09H	04H	Max.	X	ms
		P0130	0AH	84H	Min.	X	mV
		P0130	0BH	04H	Max.	X	mV
		P0130	0CH	04H	Max.	X	mV
		P0130	0DH	04H	Max.	X	s
	Heated oxygen sensor 2	P0136	19H	86H	Min.	X	mV/500ms
		P0136	1AH	86H	Min.	X	mV
		P0136	1BH	06H	Max.	X	mV
		P0136	1CH	06H	Max.	X	mV
HO2S HTR	Heated oxygen sensor 1 heater	P0135	29H	08H	Max.	X	mV
		P0135	2AH	88H	Min.	X	mV
	Heated oxygen sensor 2 heater	P0141	2DH	0AH	Max.	X	mV
		P0141	2EH	8AH	Min.	X	mV
EGR SYSTEM	EGR function	P0400	31H	8CH	Min.	X	℃
		P0400	32H	8CH	Min.	X	℃
		P0400	33H	8CH	Min.	X	℃
		P0400	34H	8CH	Min.	X	℃
		P0400	35H	0CH	Max.	X	℃
	EGRC-BPT valve function	P0402	36H	0CH	Max.	X	–
		P0402	37H	8CH	Min.	X	–

*1 : Models B15 GA16DE engine 1997MY only.

SECTION MA

CONTENTS

PRECAUTIONS AND PREPARATION 2
Supplemental Restraint System (SRS) "AIR BAG" 2
Special Service Tool 2
GENERAL MAINTENANCE 3
PERIODIC MAINTENANCE 5
Schedule 1 6
Schedule 2 7
RECOMMENDED FLUIDS AND LUBRICANTS 8
Fluids and Lubricants 8
SAE Viscosity Number 9
Antifreeze Coolant Mixture Ratio 9
ENGINE MAINTENANCE 10
Checking Drive Belts 10
Changing Engine Coolant 11
Checking Fuel Lines 12
Changing Fuel Filter 12
Changing Air Cleaner Filter 12
Changing Engine Oil 13
Changing Oil Filter 13
Changing Spark Plugs 14
Checking EVAP Vapor Purge Lines 15
Changing Positive Crankcase Ventilation (PCV) Filter 15
CHASSIS AND BODY MAINTENANCE 16
Checking Exhaust System 16
Checking Clutch Fluid Level and Leaks 16
Checking M/T Oil 16
Changing M/T Oil 16
Checking Water Entry — For 4WD models 16
Checking A/T Fluid 16
Changing A/T Fluid 17
Checking Transfer Fluid 17
Changing Transfer Fluid 18
Checking Propeller Shaft 18
Checking Differential Gear Oil 18
Changing Differential Gear Oil 19
Balancing Wheels 19
Tire Rotation 19
Checking Brake Fluid Level and Leaks 20
Checking Brake System 20
Checking Disc Brake 20
Checking Drum Brake 20
Checking Steering Gear and Linkage 21
Checking Power Steering Fluid and Lines 21
Checking Steering Gear Oil Level and Leaks 21
Lubricating Hood Latches, Locks and Hinges 22
Checking Seat Belts, Buckles, Retractors, Anchors and Adjusters 23
SERVICE DATA AND SPECIFICATIONS (SDS) 24
Engine Maintenance 24
Chassis and Body Maintenance 24

Supplemental Restraint System (SRS) "AIR BAG"

The Supplemental Restraint System "Air Bag", used along with a seat belt, helps to reduce the risk or severity of injury to the driver in a frontal collision. The Supplemental Restraint System consists of an air bag module (located in the center of the steering wheel), a diagnosis sensor unit, warning lamp, wiring harness, a crash zone sensor (4WD models) and spiral cable. Information necessary to service the system safely is included in the **RS section** of this Service Manual.

WARNING:

- **To avoid rendering the SRS inoperative, which could increase the risk of personal injury or death in the event of a collision which would result in air bag inflation, all maintenance must be performed by an authorized NISSAN dealer.**
- **Improper maintenance, including incorrect removal and installation of the SRS, can lead to personal injury caused by unintentional activation of the system.**
- **Do not use electrical test equipment on any circuit related to the SRS unless instructed to in this Service Manual. SRS wiring harnesses are covered with yellow insulation either just before the harness connectors or for the complete harness, for easy identification.**

Special Service Tool

The actual shapes of Kent-Moore tools may differ from those of special service tools illustrated here.

Tool number (Kent-Moore No.) Tool name	Description
KV10105900 (J34274) Oil filter cap wrench	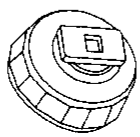 NT005 Removing oil filter

General maintenance includes those items which should be checked during the normal day-to-day operation of the vehicle. They are essential if the vehicle is to continue operating properly. The owners can perform checks and inspections themselves or they can have their NISSAN dealers do them.

Item	Reference page
OUTSIDE THE VEHICLE The maintenance items listed here should be performed from time to time, unless otherwise specified.	
Tires Check the pressure, including the spare, with a gauge periodically when at a service station, and adjust to the specified pressure if necessary. Check carefully for damage, cuts and excessive wear.	—
Wheel nuts When checking the tires, make sure no nuts are missing, and check for any loose nuts. Tighten if necessary.	—
Tire rotation Tires should be rotated every 12,000 km (7,500 miles) for 2WD models and every 6,000 km (3,750 miles) for 4WD models.	MA-19
Wheel alignment and balance If the vehicle pulls to either side while driving on a straight and level road, or if you detect uneven or abnormal tire wear, there may be a need for wheel alignment. If the steering wheel or seat vibrates at normal highway speeds, wheel balancing may be needed.	MA-19, FA-8
Windshield wiper blades Check for cracks and wear if they do not wipe properly.	—
Doors and engine hood Check that all doors, engine hood and tailgate operate smoothly. Also make sure that all latches lock securely. Lubricate if necessary. Make sure that the secondary latch keeps the hood from opening when the primary latch is released. When driving in areas using road salt or other corrosive materials, check lubrication frequently.	MA-22
Lamps Make sure that the headlamps, stop lamps, tail lamps, turn signal lamps, and other lamps are all operating properly and installed securely. Also check headlamp aim.	—
INSIDE THE VEHICLE The maintenance items listed here should be checked on a regular basis, such as when performing periodic maintenance, cleaning the vehicle, etc.	
Warning lamps and buzzers/chimes Make sure that all warning lamps and buzzers/chimes are operating properly.	—
Windshield wiper and washer Check that the wipers and washer operate properly and that the wipers do not streak.	—
Windshield defroster Check that the air comes out of the defroster outlets properly and in sufficient quantity when operating the heater or air conditioner.	—
Steering wheel Check that it has the specified play. Be sure to check for changes in the steering condition, such as excessive play, hard steering or strange noises. **Free play: Less than 35 mm (1.38 in)**	ST-7
Seats Check seat position controls such as seat adjusters, seatback recliner, etc. to make sure they operate smoothly and that all latches lock securely in every position. Check that the head restraints move up and down smoothly and that the locks (if equipped) hold securely in all latched positions. Check jump seats for smooth operation.	—
Seat belts Check that all parts of the seat belt system (e.g., buckles, anchors, adjusters and retractors) operate properly and smoothly and are installed securely. Check the belt webbing for cuts, fraying, wear and damage.	MA-23
Clutch pedal Make sure the pedal operates smoothly and check that it has the proper free play.	CL-5
Brakes Check that the brakes do not pull the vehicle to one side when applied.	—
Brake pedal and booster Check the pedal for smooth operation and make sure that it has the proper distance under it when depressed fully. Check the brake booster function. Be sure to keep floor mats away from the pedal.	BR-11, 16
Parking brake Check that the lever has the proper travel and make sure that the vehicle is held securely on a fairly steep hill when only the parking brake is applied.	BR-27

Item	Reference page
Automatic transmission "Park" mechanism Check that the lock release button on the selector lever operates properly and smoothly. On a fairly steep hill check that the vehicle is held securely with the selector lever in the "P" position without applying any brakes.	—
UNDER THE HOOD AND VEHICLE The maintenance items listed here should be checked periodically (e.g., each time you check the engine oil or refuel).	
Windshield washer fluid Check that there is adequate fluid in the tank.	—
Engine coolant level Check the coolant level when the engine is cold.	MA-11
Radiator and hoses Check the front of the radiator and clean off any dirt, insects, leaves, etc., that may have accumulated. Make sure that the hoses have no cracks, deformation, deterioration or loose connections.	—
Brake and clutch fluid levels Make sure that the brake and clutch fluid levels are between the "MAX" and "MIN" lines on the reservoirs.	MA-16, 20
Battery Check the fluid level in each cell. It should be between the "MAX" and "MIN" lines.	—
Engine drive belts Make sure that no belt is frayed, worn, cracked or oily.	MA-10
Engine oil level Check the level on the dipstick after parking the vehicle on a level spot and turning off the engine.	MA-13
Power steering fluid level and lines Check the level on the dipstick with the engine off. Check the lines for improper attachment, leaks, cracks, etc.	MA-21
Automatic transmission fluid level Check the level on the dipstick after putting the selector lever in "P" with the engine idling.	MA-16
Exhaust system Make sure that there are no loose supports, cracks or holes. If the sound of the exhaust seems unusual or there is a smell of exhaust fumes, immediately locate the trouble and correct it.	MA-16
Underbody The underbody is frequently exposed to corrosive substances such as those used on icy roads or to control dust. It is very important to remove these substances, otherwise rust will form on the floor pan, frame, fuel lines and around the exhaust system. At the end of winter, the underbody should be thoroughly flushed with plain water, being careful to clean those areas where mud and dirt can easily accumulate.	—
Fluid leaks Check under the vehicle for fuel, oil, water and other fluid leaks after the vehicle has been parked for a while. Water dripping from the air conditioner after use is normal. If any leaks or gasoline fumes are evident, check for the cause and correct it immediately.	—

Two different maintenance schedules are provided, and should be used, depending upon the conditions under which the vehicle is mainly operated. **After 60,000 miles (96,000 km) or 48 months, continue the periodic maintenance at the same mileage/time intervals.**

SCHEDULE 1

Follow Periodic Maintenance Schedule 1 if your driving habits frequently include one or more of the following driving conditions:

- Repeated short trips of less than 5 miles (8 km).
- Repeated short trips of less than 10 miles (16 km) with outside temperatures remaining below freezing.
- Operating in hot weather in stop-and-go "rush hour" traffic.
- Extensive idling and/or low speed driving for long distances, such as police, taxi or door-to-door delivery use.
- Driving in dusty conditions.
- Driving on rough, muddy, or salt spread roads.
- Towing a trailer, using a camper or a car-top carrier.

SCHEDULE 2

Follow Periodic Maintenance Schedule 2 if none of the driving conditions shown in Schedule 1 apply to your driving habits.

Maintenance for off-road driving (4x4 only)

Whenever you drive off-road through sand, mud or water, more frequent maintenance may be required of the following items:

▲ Brake pads and discs
▲ Brake lining and drums
▲ Brake lines and hoses
▲ Wheel bearing grease and free-running hub grease
▲ Differential gear oil, transmission and transfer fluid
▲ Steering linkage
▲ Propeller shaft and drive shafts
▲ Air cleaner filter
▲ Clutch housing (Check water entry. Refer to MA-16.)

Schedule 1

Abbreviations: R = Replace I = Inspect. Correct or replace if necessary.

[ ]: At the mileage intervals only

MAINTENANCE OPERATION		MAINTENANCE INTERVAL																
Perform at number of miles, kilometers or months, whichever comes first.	Miles x 1,000	3.75	7.5	11.25	15	18.75	22.5	26.25	30	33.75	37.5	41.25	45	48.75	52.5	56.25	60	Reference page
	(km x 1,000)	(6)	(12)	(18)	(24)	(30)	(36)	(42)	(48)	(54)	(60)	(66)	(72)	(78)	(84)	(90)	(96)	
	Months	3	6	9	12	15	18	21	24	27	30	33	36	39	42	45	48	
Emission control system maintenance																		
Drive belts									I*								I*	MA-10
Air cleaner filter	See NOTE (1)								[R]								[R]	MA-12
Positive crankcase ventilation (PCV) filter	See NOTE (2)								[R]								[R]	MA-15
Vapor lines									I*								I*	MA-15
Fuel lines									I*								I*	MA-12
Fuel filter	See NOTE (2)*																	MA-12
Engine coolant	See NOTE (3)																R*	MA-11
Engine oil		R	R	R	R	R	R	R	R	R	R	R	R	R	R	R	R	MA-13
Engine oil filter		R	R	R	R	R	R	R	R	R	R	R	R	R	R	R	R	MA-13
Spark plugs									[R]								[R]	MA-14
Chassis and body maintenance																		
Brake lines & cables					I				I				I				I	MA-20
Brake pads, rotors, drums & linings			I		I		I		I		I		I		I		I	MA-20
Automatic transmission, transfer fluid & manual transmission, differential gear oil (exc. LSD)	See NOTE (4)				I				I				I				I	MA-16, 17, 18, 19
Limited-slip differential (LSD) gear oil	See NOTE (4)				I				R				I				R	MA-19
Steering gear (box) & linkage, (steering damper 4x4), axle & suspension parts			I		I		I		I		I		I		I		I	MA-21, FA-5, RA-4
Drive shaft boots & propeller shaft (4x4)			I		I		I		I		I		I		I		I	MA-18, FA-14. PD-9
Steering linkage ball joints & front suspension ball joints			I		I		I		I		I		I		I		I	MA-21, FA-5
Front wheel bearing grease (4x2)									I								I	FA-6
Front wheel bearing grease & free-running hub grease (4x4)	See NOTE (5)				I				R				I				R	FA-7, 17, 18
Exhaust system			I		I		I		I		I		I		I		I	MA-16
Air bag system	See NOTE (6)																	

NOTE: (1) If operating mainly in dusty conditions, more frequent maintenance may be required.
(2) If vehicle is operated under extremely adverse weather conditions or in areas where ambient temperatures are either extremely low or extremely high, the filters might become clogged. In such an event, replace them immediately.
(3) After 60,000 miles (96,000 km) or 48 months, replace every 30,000 miles (48,000 km) or 24 months.
(4) If towing a trailer, using a camper or a car-top carrier, or driving on rough or muddy roads, change (not just inspect) oil at every 30,000 miles (48,000 km) or 24 months except for LSD. Change LSD gear oil every 15,000 miles (24,000 km) or 12 months.
(5) If operating frequently in water, replace grease every 3,750 miles (6,000 km) or 3 months.
(6) Inspect the air bag system 10 years after the date of manufacture noted on the FMVSS certification label.
★ Maintenance items and intervals with "*" are recommended by NISSAN for reliable vehicle operation. The owner need not perform such maintenance in order to maintain the emission warranty or manufacturer recall liability. Other maintenance items and intervals are required.

Schedule 2

Abbreviations: R = Replace I = Inspect. Correct or replace if necessary.

[ ]: At the mileage intervals only

MAINTENANCE OPERATION		MAINTENANCE INTERVAL								
Perform at number of miles, kilometers or months, whichever comes first.	Miles x 1,000	7.5	15	22.5	30	37.5	45	52.5	60	Reference page
	(km x 1,000)	(12)	(24)	(36)	(48)	(60)	(72)	(84)	(96)	
	Months	6	12	18	24	30	36	42	48	
Emission control system maintenance										
Drive belts					I*				I*	MA-10
Air cleaner filter					[R]				[R]	MA-12
Positive crankcase ventilation (PCV) filter	See NOTE (1)				[R]				[R]	MA-15
Vapor lines					I*				I*	MA-15
Fuel lines					I*				I*	MA-12
Fuel filter	See NOTE (1)*									MA-12
Engine coolant	See NOTE (2)								R*	MA-11
Engine oil		R	R	R	R	R	R	R	R	MA-13
Engine oil filter		R	R	R	R	R	R	R	R	MA-13
Spark plugs					[R]				[R]	MA-14
Chassis and body maintenance										
Brake lines & cables			I		I		I		I	MA-20
Brake pads, rotors, drums & linings			I		I		I		I	MA-20
Automatic transmission, transfer fluid & manual transmission, differential gear oil (exc. LSD)			I		I		I		I	MA-16, 17, 18, 19
Limited-slip differential (LSD) gear oil			I		R		I		R	MA-19
Steering gear (box) & linkage, (steering damper 4x4), axle & suspension parts					I				I	MA-21, FA-5, RA-4
Drive shaft boots & propeller shaft (4x4)			I		I		I		I	MA-18, FA-14, PD-9
Steering linkage ball joints & front suspension ball joints									I	MA-21, FA-5
Front wheel bearing grease (4x2)					I				I	FA-6
Front wheel bearing grease & free-running hub grease (4x4)			I		R		I		R	FA-7, 17, 18
Exhaust system					I				I	MA-16
Air bag system	See NOTE (3)									

NOTE: (1) If vehicle is operated under extremely adverse weather conditions or in areas where ambient temperatures are either extremely low or extremely high, the filters might become clogged. In such an event, replace them immediately.
(2) After 60,000 miles (96,000 km) or 48 months, replace every 30,000 miles (48,000 km) or 24 months.
(3) Inspect the air bag system 10 years after the date of manufacture noted on the FMVSS certification label.
★ Maintenance items and intervals with "*" are recommended by NISSAN for reliable vehicle operation. The owner need not perform such maintenance in order to maintain the emission warranty or manufacturer recall liability. Other maintenance items and intervals are required.

Fluids and Lubricants

			Capacity (Approximate)			Recommended Fluids and Lubricants
			US measure	Imp measure	Liter	
Engine oil (Refill)						
2WD	With oil filter		4-1/8 qt	3-3/8 qt	3.9	● API SG or SH and Energy Conserving II*1 ● API Certification Mark*1
	Without oil filter		3-3/4 qt	3-1/8 qt	3.5	
4WD	With oil filter		4-3/8 qt	3-5/8 qt	4.1	
	Without oil filter		4 qt	3-3/8 qt	3.8	
Cooling system (With reservoir)						
		2WD	8-5/8 qt	7-1/8 qt	8.1	Antifreeze coolant (Ethylene glycol base) 50/50 mixture
		4WD	9-1/2 qt	7-7/8 qt	9.0	
Manual transmission gear oil	FS5W71C	2WD	4-1/4 pt	3-1/2 pt	2.0	API GL-4*1
		4WD	10-3/8 pt	8-5/8 pt	4.9	
Transfer fluid			2-3/8 qt	2 qt	2.2	Type DEXRON™
Manual steering fluid			1-3/8 pt	1-1/8 pt	0.62	API GL-4*1
Differential carrier gear oil						
Rear:	H190A		3-1/8 pt	2-5/8 pt	1.5	Standard differential gear: API GL-5*1 Limited-slip differential (LSD) gear: Use only LSD gear oil API GL-5 or SAE 80W-90*4 approved for Nissan LSD*5.
	C200		2-3/4 pt	2-1/4 pt	1.3	
	H233B		5-7/8 pt	4-7/8 pt	2.8	
Front (4WD):	R180A		2-3/4 pt	2-1/4 pt	1.3	
Automatic transmission fluid			8-3/8 qt	7 qt	7.9	Nissan Matic "D" (Continental U.S. and Alaska) or Genuine Nissan Automatic Transmission Fluid (Canada)*2
Power steering fluid	PB48S		30.4-33.8 fl oz	31.7-35.2 fl oz	0.9-1.0	Type DEXRON™ IIE, DEXRON™ III or equivalent
	PB59K		33.8-37.2 fl oz	35.2-38.7 fl oz	1.0-1.1	
Brake and clutch fluid			—	—	—	Genuine Nissan Brake Fluid*3 or equivalent DOT 3 (US FMVSS No. 116)
Multi-purpose grease			—	—	—	NLGI No. 2 (Lithium soap base)
Free-running hub grease (Auto-lock)			—	—	—	Genuine Nissan grease or equivalent

*1: For further details, see "SAE Viscosity Number".
*2: Dexron® III/Mercon® or equivalent may also be used. Outside the continental United States and Alaska contact a NISSAN dealership for more information regarding suitable fluids, including recommended brand(s) of Dexron® III/Mercon® or Dexron® IIE/Mercon® Automatic Transmission Fluid.
*3: Available in mainland U.S.A. through your Nissan dealer.
*4: SAE 90 is acceptable in ambient temperatures above −18°C (0°F).
*5: Contact a Nissan dealer for a list of approved oils.

SAE Viscosity Number

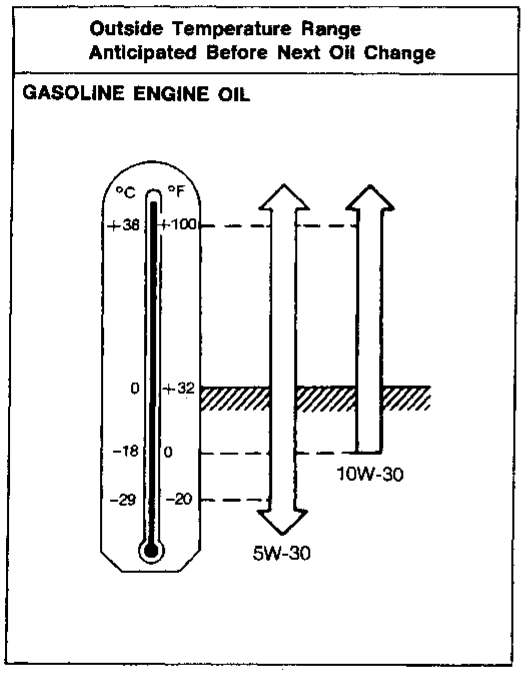

SMA796CB

SAE 5W-30 viscosity oil is preferred for all temperatures. SAE 10W-30 viscosity oil may be used if the ambient temperature is above –18°C (0°F).

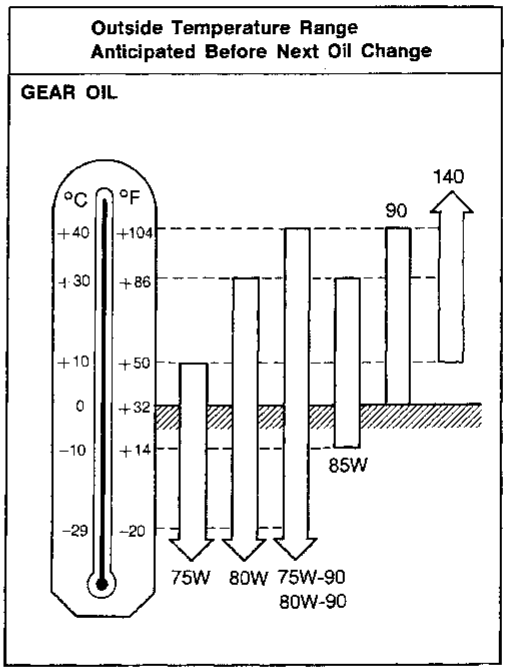

TI0003

75W-90 for transmission, and 80W-90 for differential are preferable if the ambient temperature is below 40°C (104°F).

Antifreeze Coolant Mixture Ratio

The engine cooling system is filled at the factory with a high-quality, year-round, antifreeze coolant solution. The antifreeze solution contains rust and corrosion inhibitors. Additional cooling system additives are not necessary.

CAUTION:
When adding or replacing coolant, be sure to use only an ethylene glycol antifreeze with the proper mixture ratio of 50% antifreeze 50% soft water.

Outside temperature down to		Anti-freeze	Soft water
°C	°F		
–35	–30	50%	50%

Other types of coolant solutions may damage the cooling system.

Checking Drive Belts

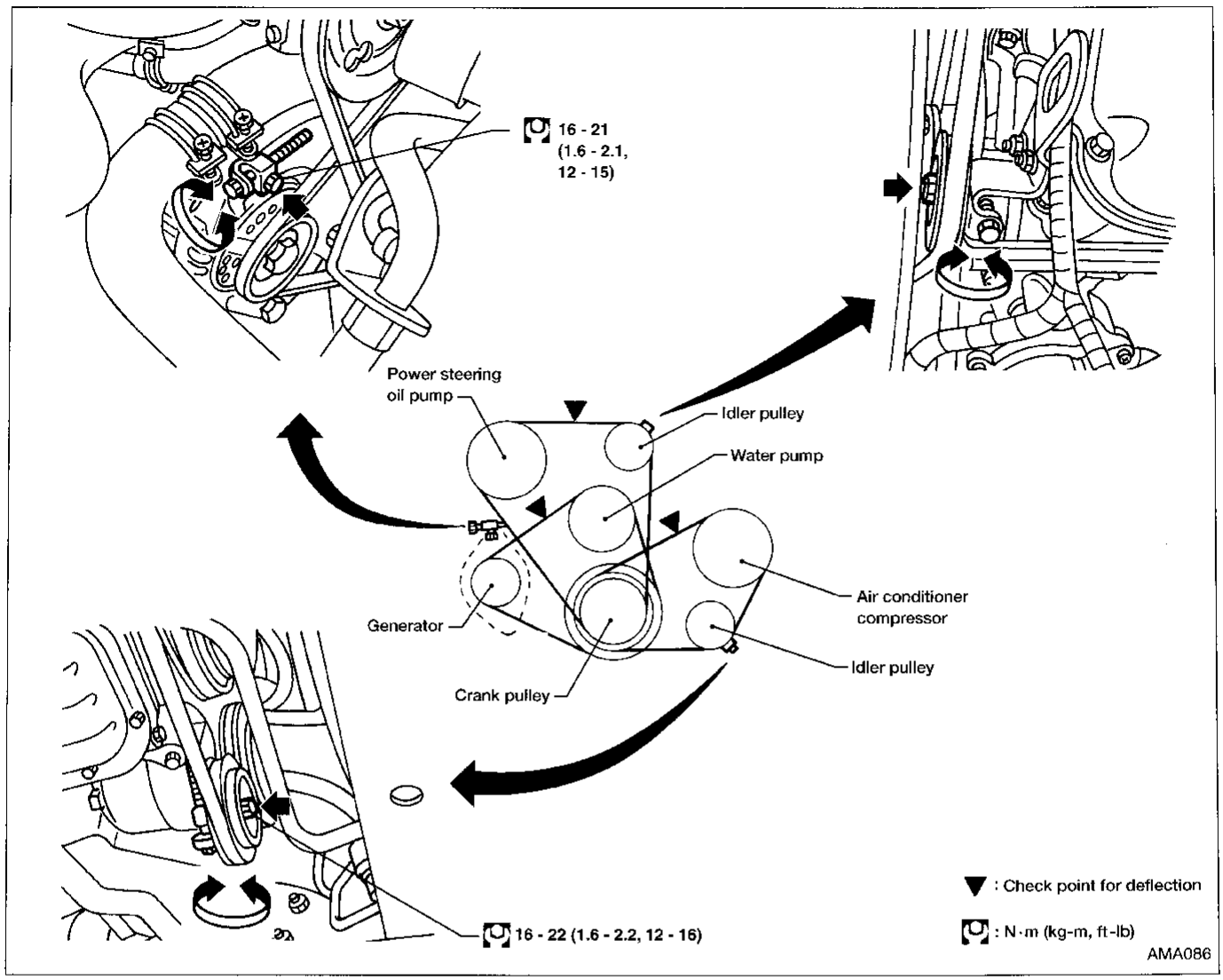

1. Inspect for cracks, fraying, wear and oil. If necessary, replace with a new one.
2. Inspect drive belt deflections by pushing midway between pulleys.

Inspect drive belt deflections when engine is cold.

Adjust if belt deflections exceed the limit.

Belt deflection:

Unit: mm (in)

	Used belt deflection		Deflection of new belt
	Limit	Deflection after adjustment	
Generator	17 (0.67)	10 - 12 (0.39 - 0.47)	8 - 10 (0.31 - 0.39)
Air conditioner compressor	16 (0.63)	10 - 12 (0.39 - 0.47)	8 - 10 (0.31 - 0.39)
Power steering oil pump	15 (0.59)	9 - 11 (0.35 - 0.43)	7 - 9 (0.28 - 0.35)
Applied pushing force	98 N (10 kg, 22 lb)		

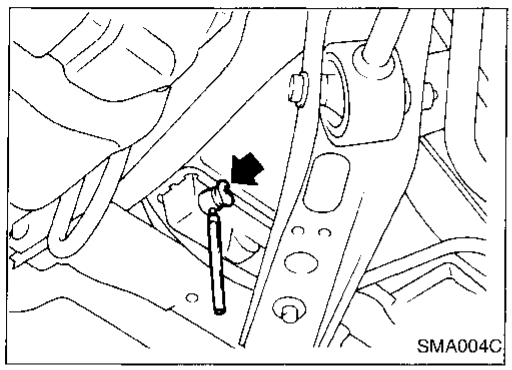

Changing Engine Coolant

WARNING:
To avoid being scalded, never change the coolant when the engine is hot.

1. Move heater temperature control lever all the way to "HOT" position or the highest temperature position.
2. Open drain cock at the bottom of radiator, and remove radiator cap.

Be careful not to allow coolant to contact drive belts.

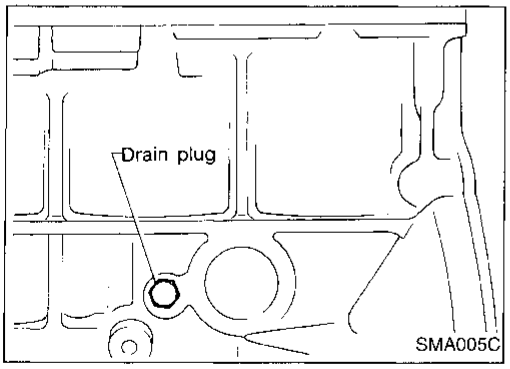

3. Remove cylinder block drain plug.
4. Close drain cock and tighten drain plug securely.

- **Apply sealant to the thread of drain plug.**
  [O]: 34 - 44 N·m (3.5 - 4.5 kg-m, 25 - 33 ft-lb)

5. Open air relief plug.
6. Fill radiator with water and close air relief plug and radiator cap.
7. Run engine and warm it up sufficiently.
8. Rev engine 2 or 3 times under no-load.
9. Stop engine and wait until it cools down.
10. Repeat step 2 through step 9 until clear water begins to drain from radiator.
11. Drain water.

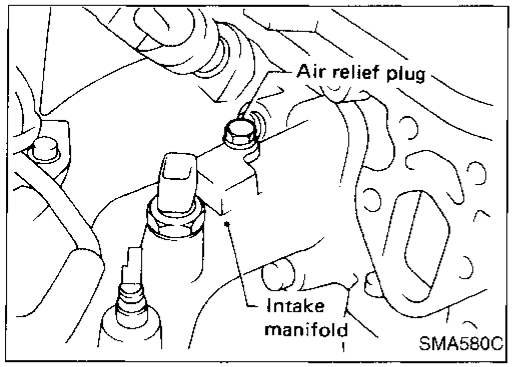

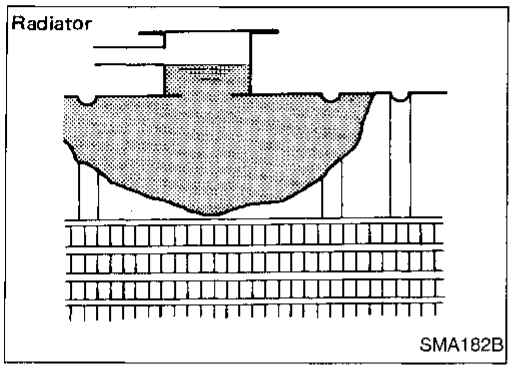

12. Open radiator cap and air relief plug.
13. Fill radiator with coolant up to specified level.

For coolant mixture ratio, refer to MA-9.

Unit: ℓ (US qt, Imp qt)

	Coolant capacity	
	2WD	4WD
Without reservoir tank	7.3 (7-3/4, 6-3/8)	8.2 (8-5/8, 7-1/4)
Reservoir tank	0.8 (7/8, 3/4)	

Pour coolant through coolant filler neck slowly to allow air in system to escape.

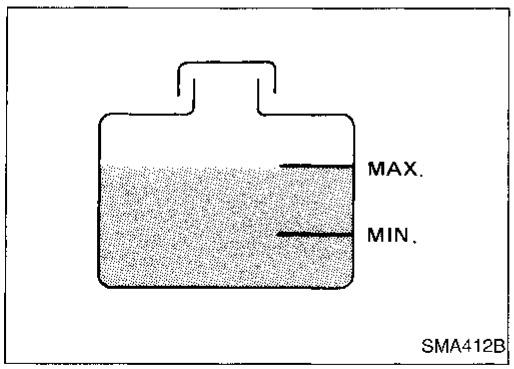

14. Close air relief plug.
15. Remove reservoir tank, drain coolant, then clean reservoir tank.
16. Install reservoir tank and fill it with coolant up to "MAX" level and then install radiator cap.
17. Run engine and warm it up sufficiently.
18. Rev engine 2 or 3 times under no-load.
19. Stop engine and cool it down, then add coolant as necessary.

- **Clean excess coolant from engine.**

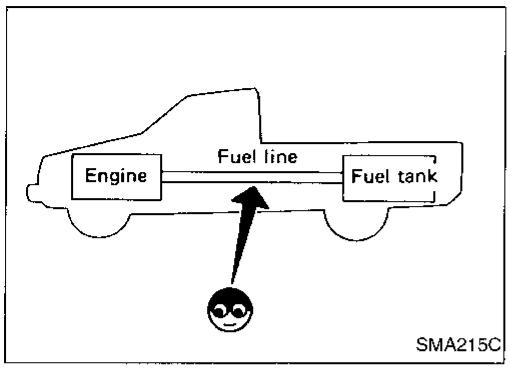

Checking Fuel Lines

Inspect fuel lines and tank for improper attachment, leaks, cracks, damage, chafing and deterioration.
If necessary, repair or replace.

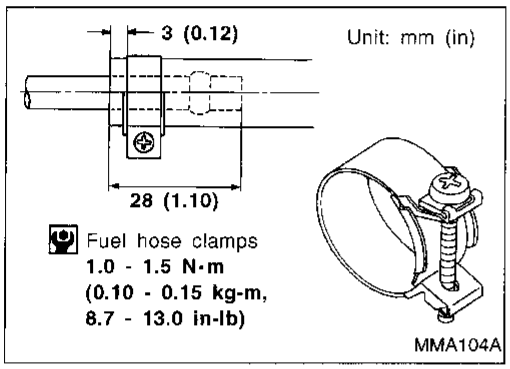

CAUTION:
Tighten high-pressure rubber hose clamp so that clamp end is 3 mm (0.12 in) from hose end.
Tightening torque specifications are the same for all rubber hose clamps.
Ensure that the screw does not contact adjacent parts.

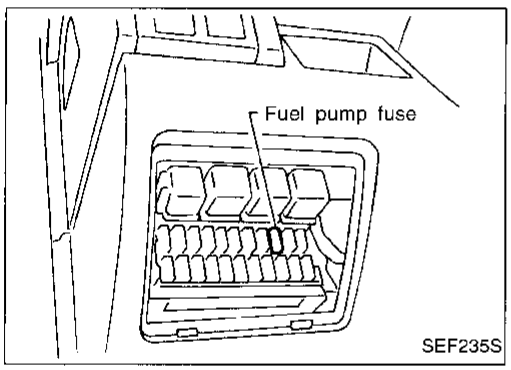

Changing Fuel Filter

WARNING:
Before removing fuel filter, release fuel pressure from fuel line.

1. Remove fuse for fuel pump.
2. Start engine.
3. After engine stalls, crank engine two or three times to make sure that fuel pressure is released.
4. Turn ignition switch OFF and install fuse for fuel pump.

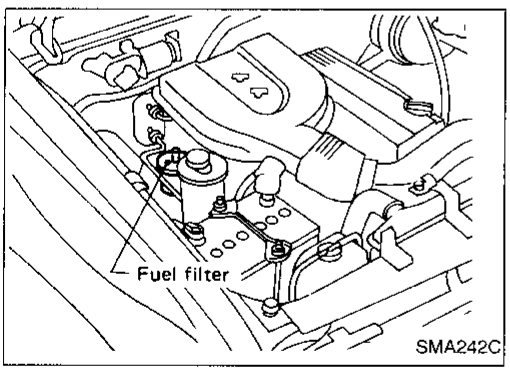

WARNING:
Use rubber gloves to prevent fuel from contacting skin when removing fuel hoses and filter.

5. Loosen fuel hose clamps.
6. Replace fuel filter.

- **Be careful not to spill fuel over engine compartment. Place a shop towel to absorb fuel.**
- **Use a high-pressure fuel filter. Do not use a synthetic resinous fuel filter.**
- **When tightening fuel hose clamps, refer to "Checking Fuel Lines", MA-12.**

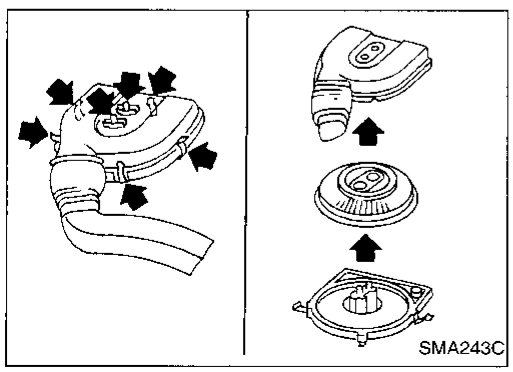

Changing Air Cleaner Filter

The viscous paper filter does not need cleaning between replacement intervals.

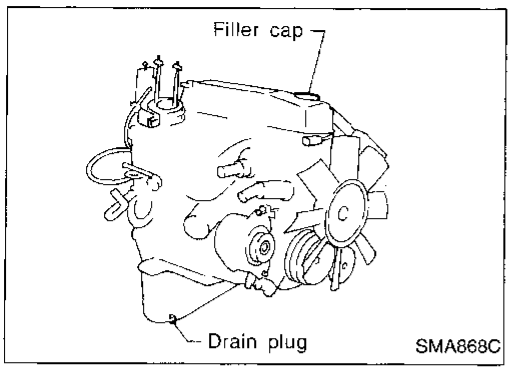

Changing Engine Oil

WARNING:

- **Be careful not to burn yourself, as the engine oil is hot.**
- **Prolonged and repeated contact with used engine oil may cause skin cancer; try to avoid direct skin contact with used oil. If skin contact is made, wash thoroughly with soap or hand cleaner as soon as possible.**

1. Warm up engine, and check for oil leakage from engine components.
2. Remove drain plug and oil filler cap.
3. Drain oil and refill with new engine oil.

Oil specification and viscosity:

- **API SG or SH and Energy Conserving II**
- **API Certification Mark**
- **Refer to "RECOMMENDED FLUIDS AND LUBRICANTS", MA-8.**

Refill oil capacity (Approximately):

Unit: ℓ (US qt, Imp qt)

	2WD	4WD
With oil filter change	3.9 (4-1/8, 3-3/8)	4.1 (4-3/8, 3-5/8)
Without oil filter change	3.5 (3-3/4, 3-1/8)	3.8 (4, 3-3/8)

CAUTION:

- **Be sure to clean drain plug and install with new washer.**
  Drain plug:
  [O]: 29 - 39 N·m (3.0 - 4.0 kg-m, 22 - 29 ft-lb)
- **The refill capacity changes depending on the oil temperature and drain time. Use these values as a reference and be certain to check with the dipstick when changing the oil.**

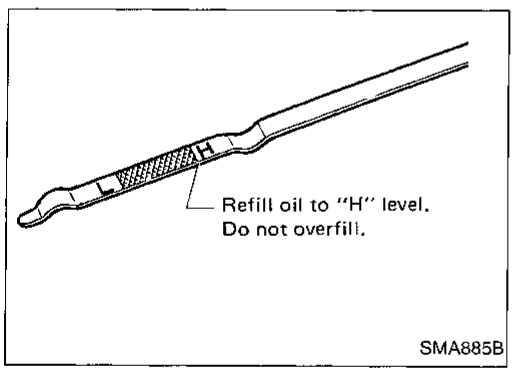

4. Check oil level.
5. Start engine and check area around drain plug and oil filter for oil leakage.
6. Run engine for a few minutes, then turn it off. After several minutes, check oil level.

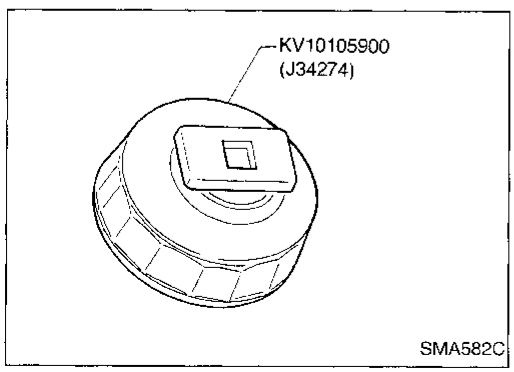

Changing Oil Filter

1. Remove oil filter with Tool.

WARNING:

Be careful not to burn yourself. Engine and engine oil are hot.

Changing Oil Filter (Cont'd)

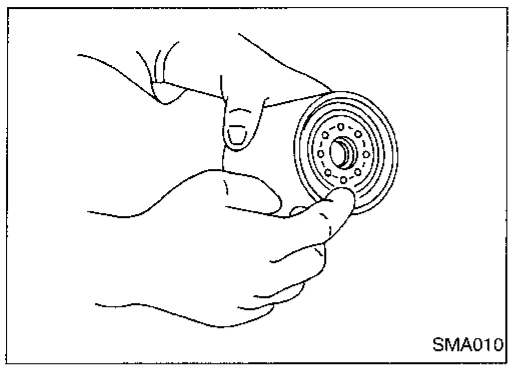

2. Clean oil filter mounting surface on cylinder block. Coat rubber seal of new oil filter with engine oil.

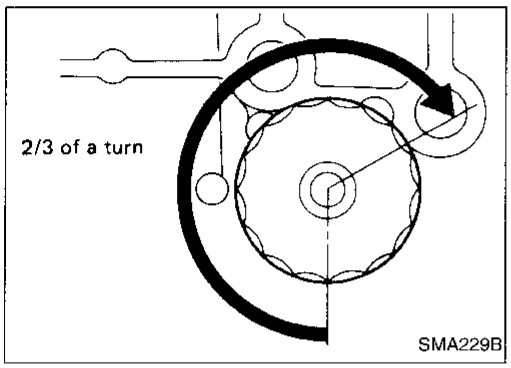

3. Screw in the oil filter until a slight resistance is felt, then tighten additionally more than 2/3 of a turn.
4. Add engine oil.

Refer to "Changing Engine Oil", MA-13.

- **Clean excess oil from engine.**

Changing Spark Plugs

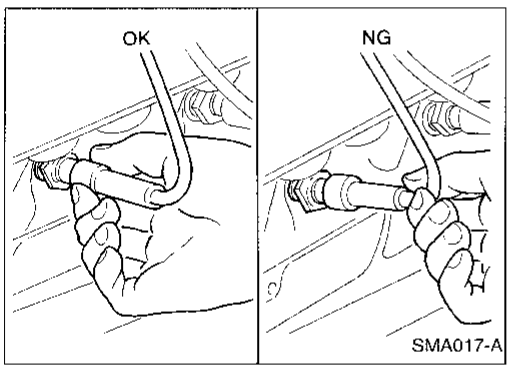

1. Disconnect ignition wires from spark plugs at boot. Do not pull on the wire.

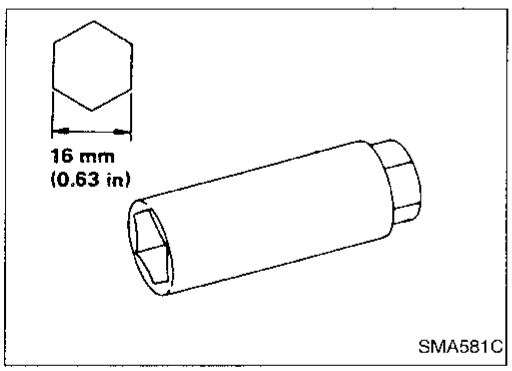

2. Remove spark plugs with spark plug wrench.

Spark plug:

Make	NGK
Standard type	ZFR5E-11
Hot type	ZFR4E-11
Cold type	ZFR6E-11

Use standard type spark plug under normal conditions. The hot type spark plug is suitable when fouling occurs with the standard spark plug under conditions such as:

- frequent engine starts
- low ambient temperature

The cold type spark plug is suitable when spark knock occurs with the standard spark plug under conditions such as:

- extended highway driving
- frequent high engine revolution

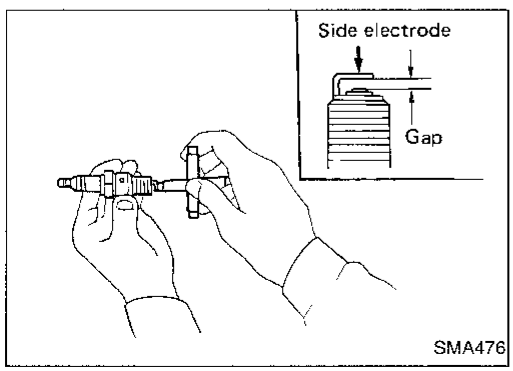

3. Check plug gap of each new spark plug.
   Gap: 1.0 - 1.1 mm (0.039 - 0.043 in)
4. Install spark plugs. Reconnect ignition wires according to numbers indicated on them.
   Spark plug:
   [O]: 20 - 29 N·m (2.0 - 3.0 kg-m, 14 - 22 ft-lb)

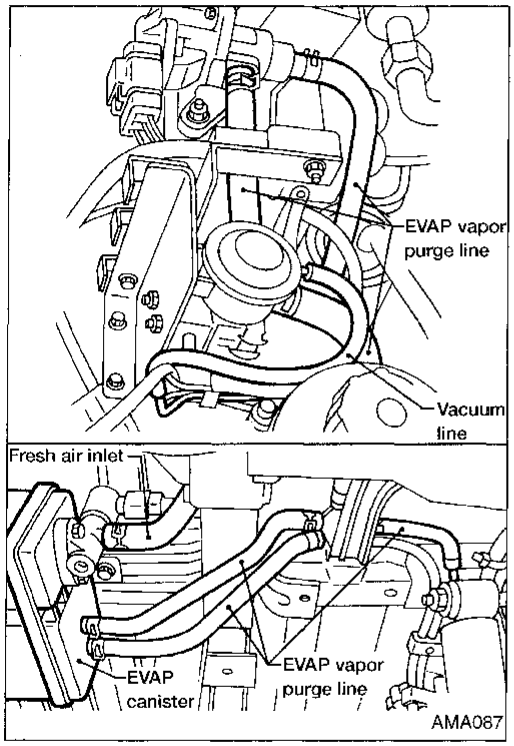

Checking EVAP Vapor Purge Lines

1. Visually inspect EVAP vapor purge lines for improper attachment and for cracks, damage, loose connections, chafing and deterioration.
2. Inspect fuel tank filler cap vacuum relief valve for clogging, sticking, etc.

   Refer to EC section ("EVAPORATIVE EMISSION SYSTEM").

Changing Positive Crankcase Ventilation (PCV) Filter

Remove air cleaner cover and take out PCV filter located inside air cleaner cover. Then install new PCV filter.

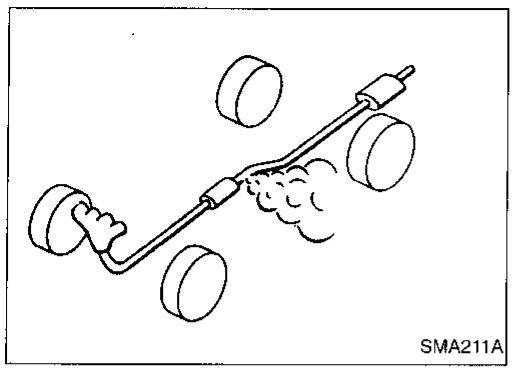

Checking Exhaust System

Check exhaust pipes, muffler and mounting for improper attachment, leaks, cracks, damage, loose connections, chafing and deterioration.

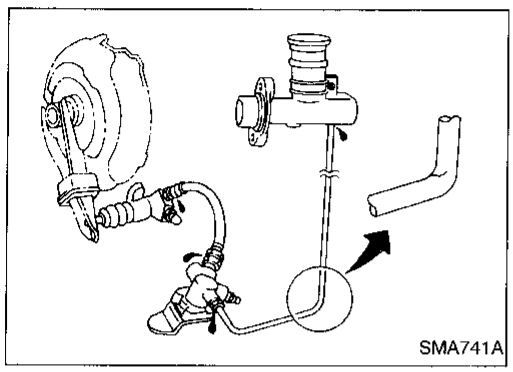

Checking Clutch Fluid Level and Leaks

If fluid level is extremely low, check clutch system for leaks.

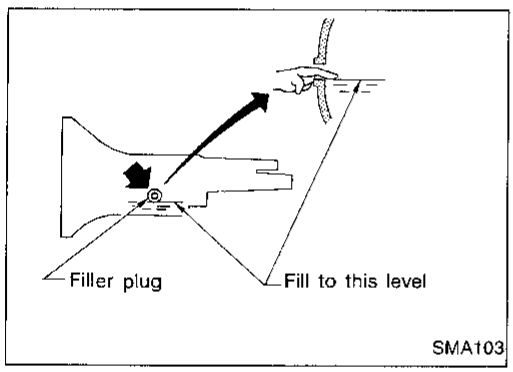

Checking M/T Oil

Check for oil leakage and oil level.

Never start engine while checking oil level.

Filler plug:

[O]: 25 - 34 N·m (2.5 - 3.5 kg-m, 18 - 25 ft-lb)

Changing M/T Oil

1. Drain oil from drain plug and refill with new gear oil.
2. Check oil level.

Oil grade and viscosity:

API GL-4. Refer to "RECOMMENDED FLUIDS AND LUBRICANTS", MA-8.

Oil capacity:

FS5W71C

2WD 2.0 ℓ (4-1/4 US pt, 3-1/2 Imp pt)

4WD 4.0 ℓ (8-1/2 US pt, 7 Imp pt)

Drain plug:

[O]: 25 - 34 N·m (2.5 - 3.5 kg-m, 18 - 25 ft-lb)

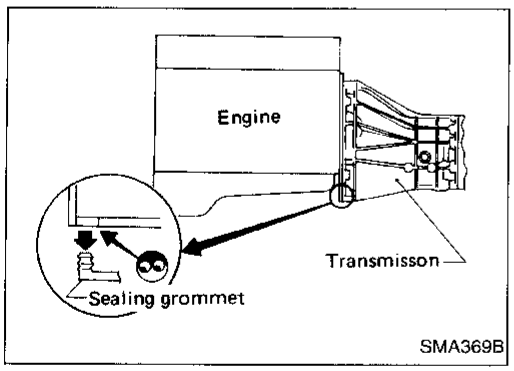

Checking Water Entry — For 4WD models

Check water entry in the clutch housing by removing the sealing grommet whenever driving in deep water or mud.

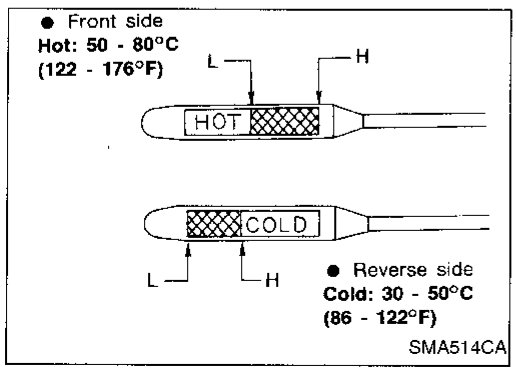

Checking A/T Fluid

1. Warm up engine.
2. Check for fluid leakage.
3. Before driving, fluid level can be checked at fluid temperatures of 30 to 50°C (86 to 122°F) using "COLD" range on dipstick.

a. Park vehicle on level surface and set parking brake.
b. Start engine and move selector lever through each gear position. Leave selector lever in "P" position.
c. Check fluid level with engine idling.
d. Remove dipstick and note reading. If level is at low side of either range, add fluid to the charging pipe.

Checking A/T Fluid (Cont'd)

e. Reinsert dipstick into charging pipe as far as it will go.
f. Remove dipstick and note reading. If reading is at low side of range, add fluid to the charging pipe.

Do not overfill.

4. Drive vehicle for approximately 5 minutes in urban areas.
5. Recheck fluid level at fluid temperatures of 50° to 80°C (122° to 176°F) using "HOT" range on dipstick.
6. Check fluid condition.

- If fluid is very dark or smells burned, refer to AT section for checking operation of A/T. Flush cooling system after repair of A/T.
- If A/T fluid contains frictional material (clutches, bands, etc.), replace radiator and flush cooler line using cleaning solvent and compressed air after repair of A/T. Refer to LC section ("Radiator", "ENGINE COOLING SYSTEM").

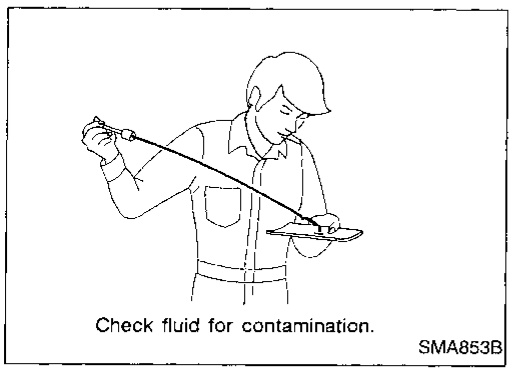
Check fluid for contamination.
SMA853B

Changing A/T Fluid

1. Warm up A/T fluid.
2. Stop engine.
3. Drain A/T fluid from drain plug and refill with new A/T fluid. Measure amount of fluid drained and refill with equal amount of new fluid.
   Fluid grade and viscosity:
   Nissan Matic "D" (Continental U.S. and Alaska) or Genuine Nissan Automatic Transmission Fluid (Canada). Refer to "RECOMMENDED FLUIDS AND LUBRICANTS", MA-8.
   Fluid capacity (With torque converter):
   7.9 ℓ (8-3/8 US qt, 7 Imp qt)
   Drain plug:
   [O]: 29 - 39 N·m (3.0 - 4.0 kg-m, 22 - 29 ft-lb)
4. Run engine at idle speed for five minutes.
5. Check fluid level and condition. Refer to "Checking A/T Fluid". If fluid is still dirty, repeat steps 2 through 5, MA-16.

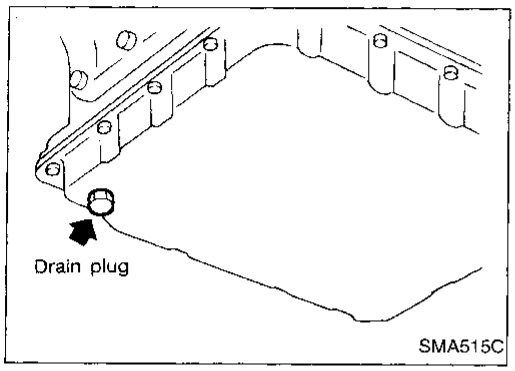

SMA515C

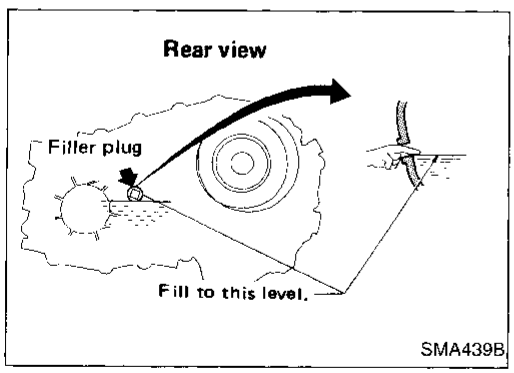

SMA439B

Checking Transfer Fluid

Check for fluid leakage and fluid level.

Automatic Transmission Fluid is used for the transfer in the factory.

Never start engine while checking fluid level.

Filler plug:
[O]: 25 - 34 N·m (2.5 - 3.5 kg-m, 18 - 25 ft-lb)

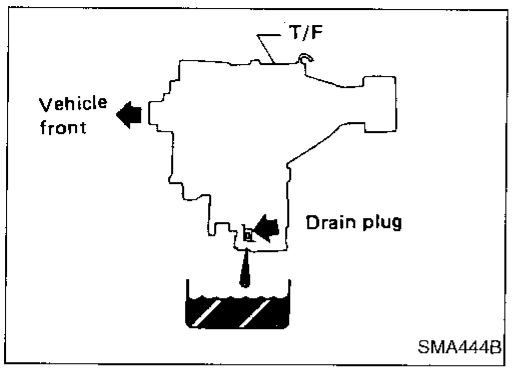

Changing Transfer Fluid

When changing transfer fluid completely, use the following fluid.

Fluid grade:

Type DEXRON™. Refer to "RECOMMENDED FLUIDS AND LUBRICANTS", MA-8.

Fluid capacity:

2.2 ℓ (2-3/8 US qt, 2 Imp qt)

Drain plug:

[O]: 25 - 34 N·m (2.5 - 3.5 kg-m, 18 - 25 ft-lb)

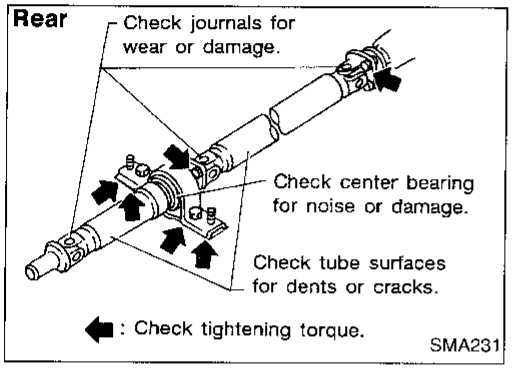

Checking Propeller Shaft

Check propeller shaft for damage, looseness and grease leakage.

Tightening torque: Refer to PD section.

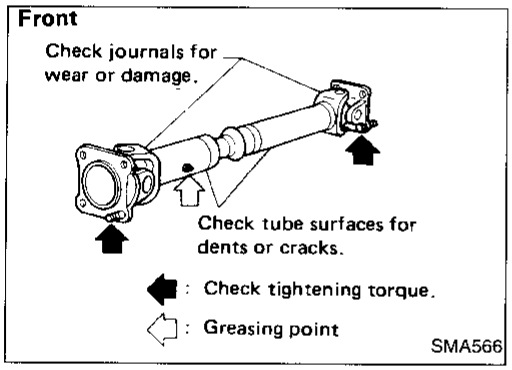

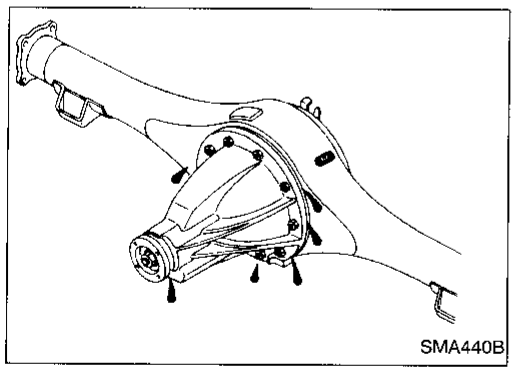

Checking Differential Gear Oil

Check for oil leakage and oil level.

Filler plug:

Front

[O]: 39 - 59 N·m (4 - 6 kg-m, 29 - 43 ft-lb)

Rear

H190A, H233B

[O]: 59 - 98 N·m (6 - 10 kg-m, 43 - 72 ft-lb)

C200

[O]: 39 - 59 N·m (4 - 6 kg-m, 29 - 43 ft-lb)

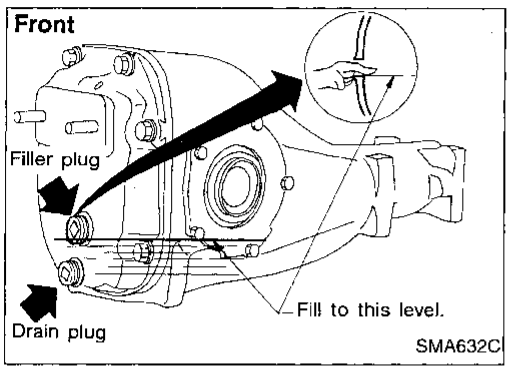

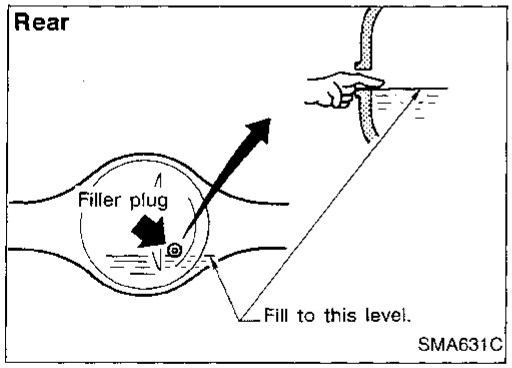

Changing Differential Gear Oil

1. Drain oil from drain plug and refill with new gear oil.
2. Check oil level.

Oil grade and viscosity:
See "RECOMMENDED FLUIDS AND LUBRICANTS", MA-8.

Oil capacity:
Front
1.3 ℓ (2-3/4 US pt, 2-1/4 Imp pt)
Rear
H190A
1.5 ℓ (3-1/8 US pt, 2-5/8 Imp pt)
C200
1.3 ℓ (2-3/4 US pt, 2-1/4 Imp pt)
H233B
2.8 ℓ (5-7/8 US pt, 4-7/8 Imp pt)

Drain plug:
Front
[O]: 39 - 59 N·m (4 - 6 kg-m, 29 - 43 ft-lb)
Rear
[O]: 59 - 98 N·m (6 - 10 kg-m, 43 - 72 ft-lb)

Limited-slip differential gear

- Use only approved limited-slip differential gear oil.
- Limited-slip differential identification.

(1) Lift both rear wheels off the ground.
(2) Turn one rear wheel by hand.
(3) If both rear wheels turn in the same direction simultaneously, vehicle is equipped with limited-slip differential.

Balancing Wheels

Adjust wheel balance using the road wheel center.

Wheel balance (Maximum allowable unbalance):
Refer to SDS, MA-24.

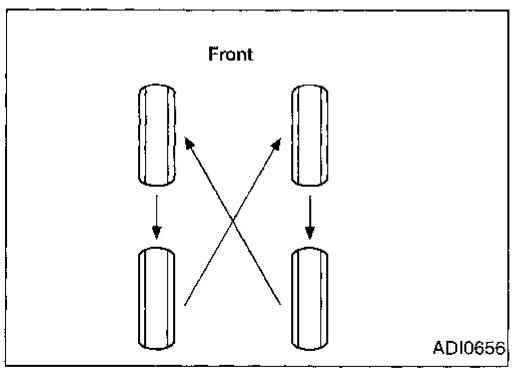

Tire Rotation

- **After rotating the tires, adjust the tire pressure.**
- **Retighten the wheel nuts after the aluminum wheel has been run for the first 1,000 km (600 miles) or if a flat tire occurs.**
- **Do not include the T-type spare tire and small size spare tire when rotating the tires.**

Wheel nuts:
[O]: 118 - 147 N·m (12 - 15 kg-m, 87 - 108 ft-lb)

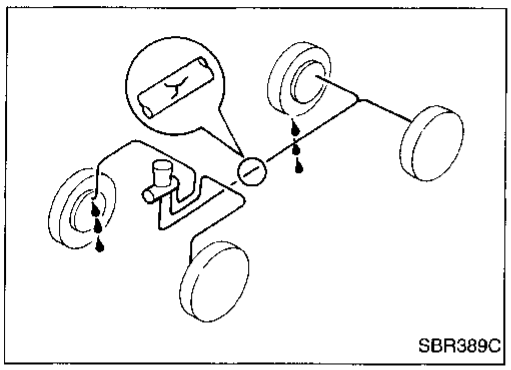

Checking Brake Fluid Level and Leaks

If fluid level is extremely low, check brake system for leaks.

Checking Brake System

Check brake fluid lines and parking brake cables for improper attachment, leaks, chafing, abrasion, deterioration, etc.

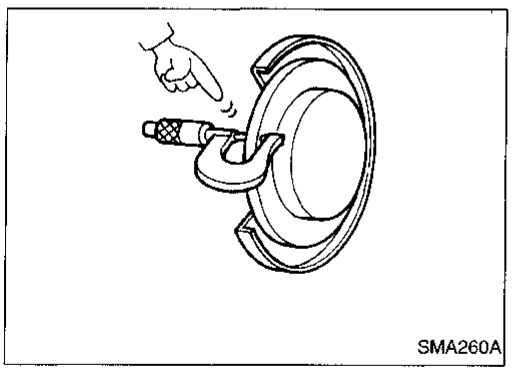

Checking Disc Brake

ROTOR

Check condition and thickness.

Minimum thickness:

CL28VA	**20 mm (0.79 in)**
CL28VD	**24 mm (0.94 in)**

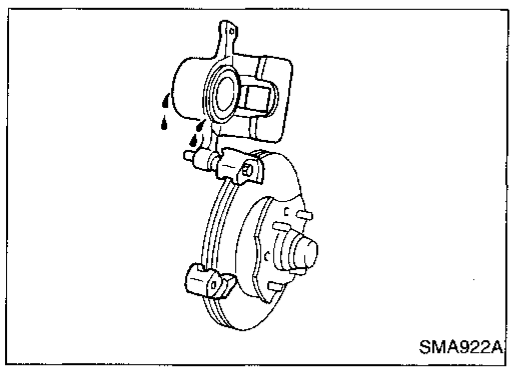

CALIPER

Check for leakage.

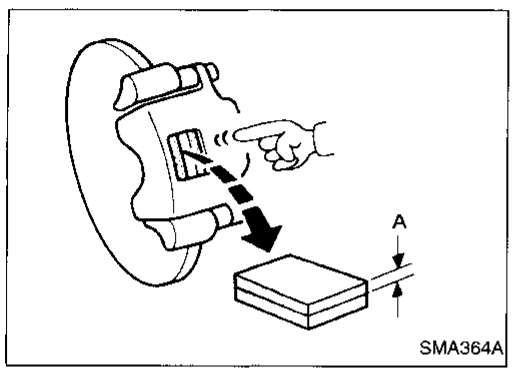

PAD

Measure wear and check for damage.

Minimum thickness: 2 mm (0.08 in)

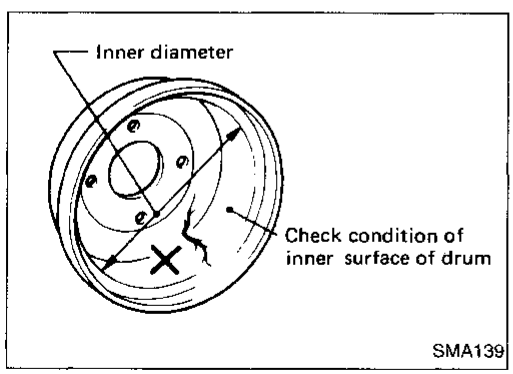

Checking Drum Brake

WHEEL CYLINDER

Check for leakage.

DRUM

Check condition and inner surface.

Drum repair limit (Maximum inner diameter):

LT26B	**261.5 mm (10.30 in)**
LT30A	**296.5 mm (11.67 in)**

Checking Drum Brake (Cont'd)

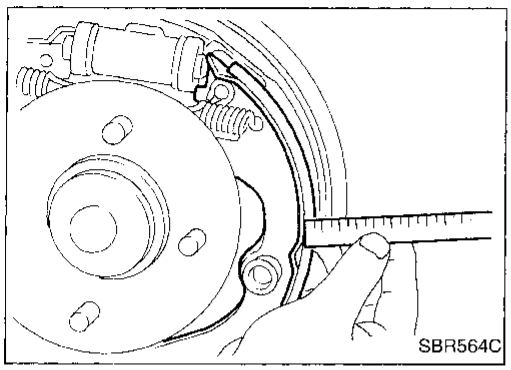

LINING

Measure wear and check for damage.

Lining wear limit (Minimum thickness):
1.5 mm (0.059 in)

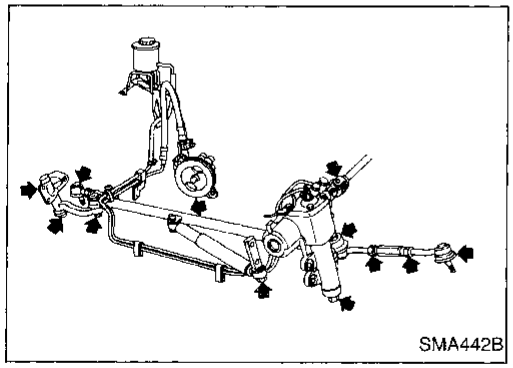

Checking Steering Gear and Linkage

STEERING GEAR

- Check gear housing and boots for looseness, damage and grease leakage.
- Check connection with steering column for looseness.

STEERING LINKAGE

- Check ball joint, dust cover and other component parts for looseness, wear, damage and grease leakage.

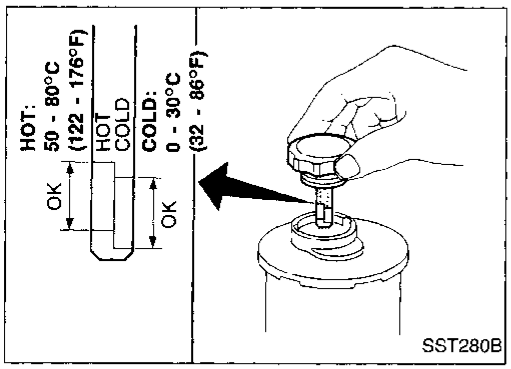

Checking Power Steering Fluid and Lines

- Check fluid level with engine off.
- Check fluid level with dipstick on reservoir cap. Use "HOT" range at fluid temperatures of 50 to 80°C (122 to 176°F). Use "COLD" range at fluid temperatures of 0 to 30°C (32 to 86°F).

CAUTION:

- **Do not overfill.**
- **Recommended fluid is Automatic Transmission Fluid type "DEXRON™ IIE", "DEXRON™ III" or equivalent.**

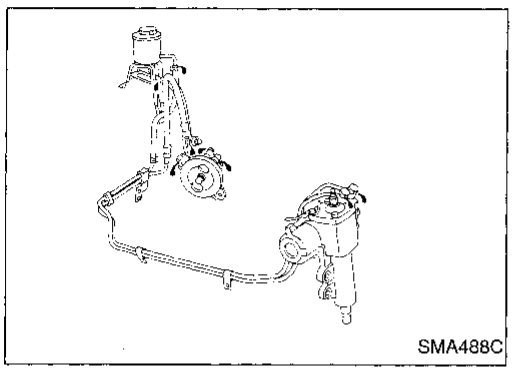

- Check lines for improper attachment, leaks, cracks, damage, loose connections, chafing and deterioration.

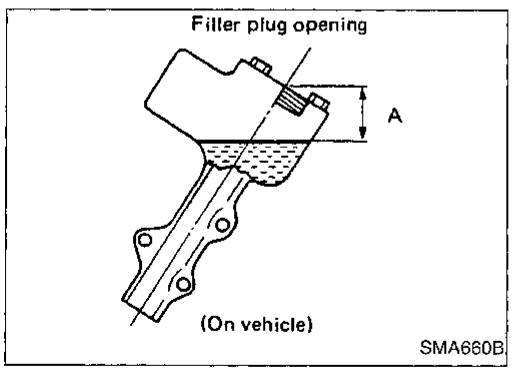

Checking Steering Gear Oil Level and Leaks

- Check steering gear for oil level and leakage.
- Check oil level.

Oil level:
Distance "A"
20 mm (0.79 in) or less

Be careful not to overflow gear oil when filling up.

Lubricating Hood Latches, Locks and Hinges

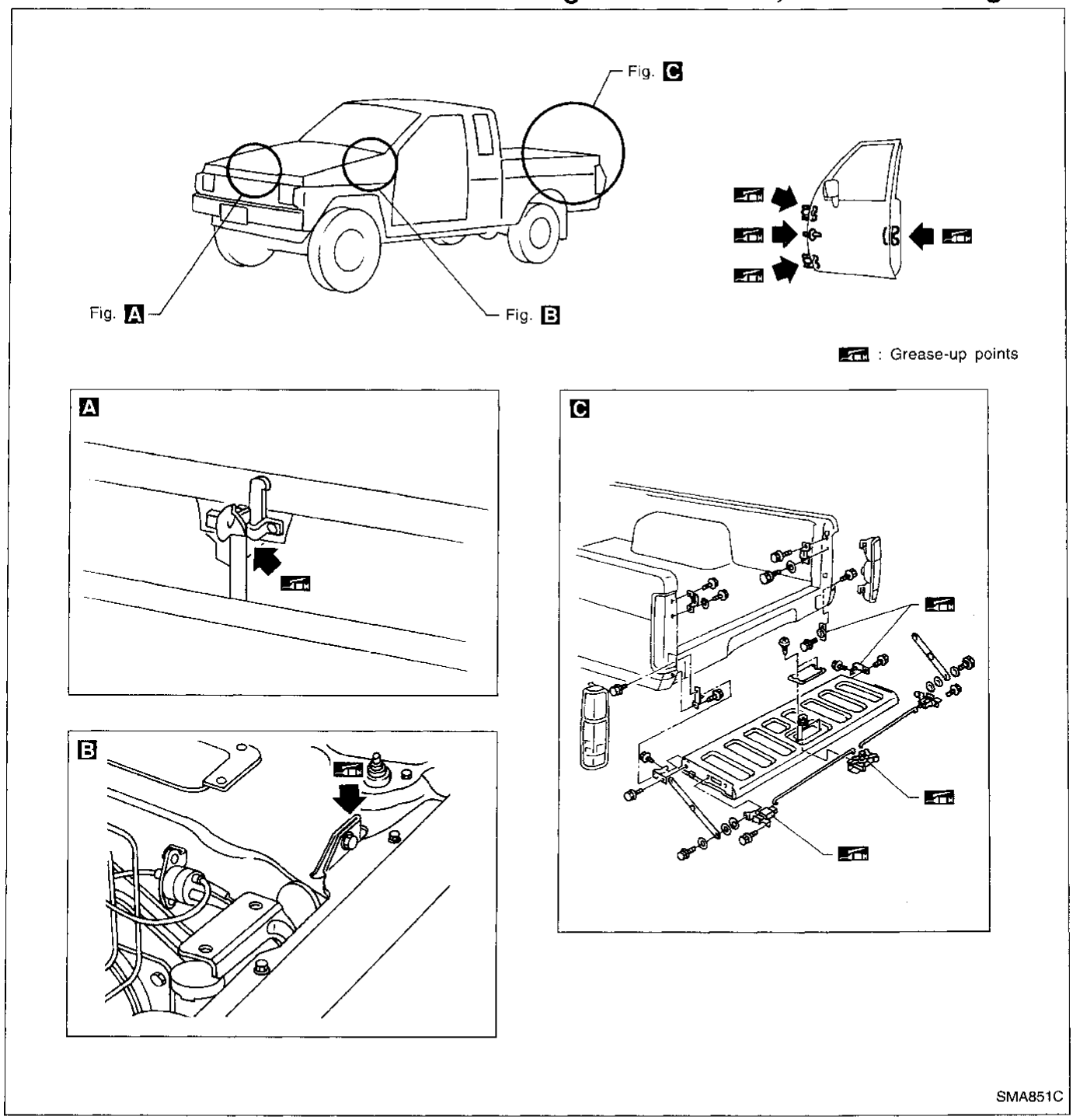

Checking Seat Belts, Buckles, Retractors, Anchors and Adjusters

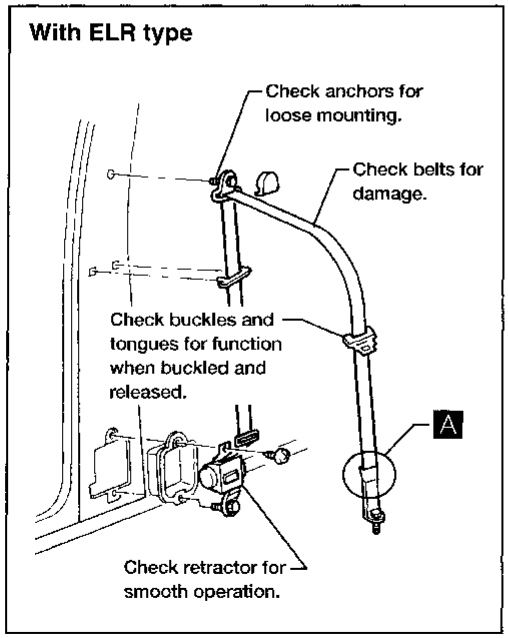

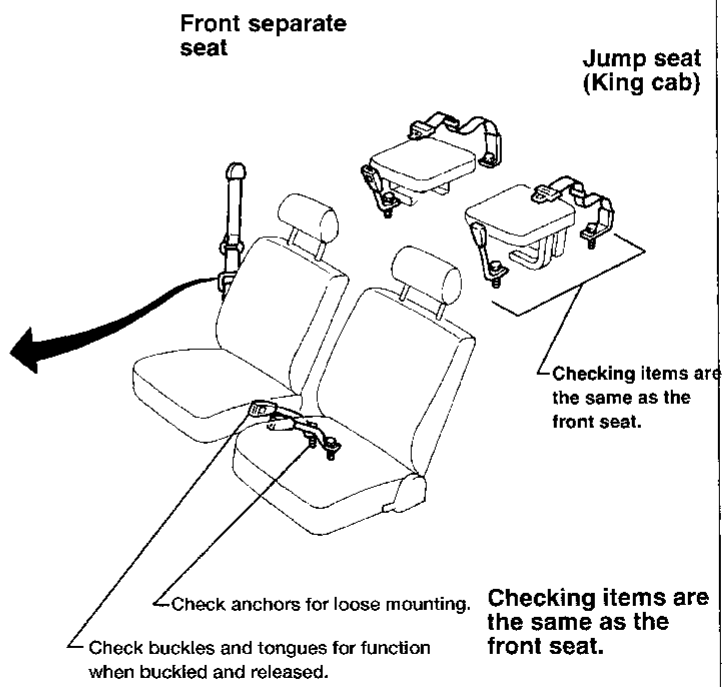

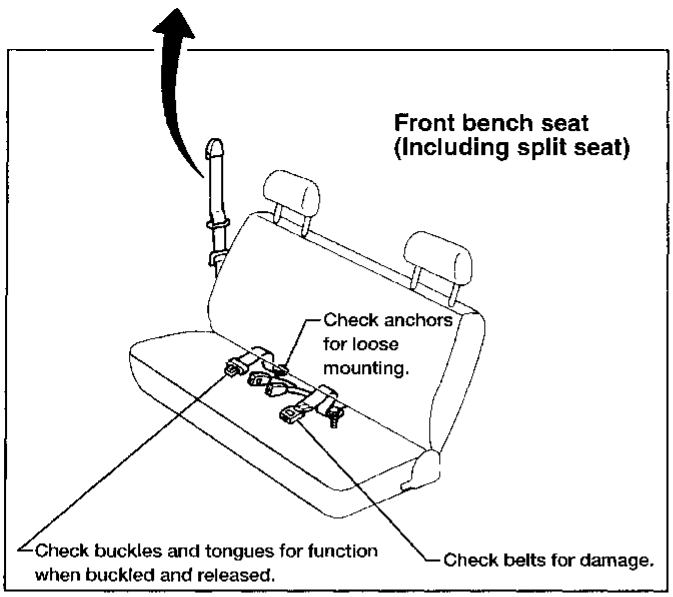

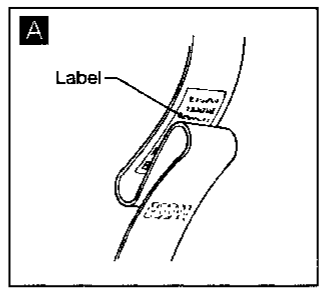

For front seat belt, shock absorber type belt has been used. Replace the belt when loop has been pulled out and "REPLACE BELT" is visible because this seat belt has a loop of webbing under the sleeve.

CAUTION:

1. **If the vehicle has collided or overturned, replace the entire belt assembly, regardless of nature of accident.**
2. **If the condition of any component of a seat belt is questionable, do not repair seat belt, but replace it as a belt assembly.**
3. **If webbing is cut, frayed, or damaged, replace belt assembly.**
4. **Do not spill drinks, oil, etc. on inner lap belt buckle. Never oil tongue and buckle.**
5. **Use a NISSAN genuine seat belt assembly.**

Anchor bolt:

: 24 - 31 N•m (2.4 - 3.1 kg-m, 17 - 23 ft-lb)

AMA088

Engine Maintenance

INSPECTION AND ADJUSTMENT

Drive belt deflection

Unit: mm (in)

	Used belt deflection		Deflection of new belt
	Limit	Deflection after adjustment	
Generator	17 (0.67)	10 - 12 (0.39 - 0.47)	8 - 10 (0.31 - 0.39)
Air conditioner compressor	16 (0.63)	10 - 12 (0.39 - 0.47)	8 - 10 (0.31 - 0.39)
Power steering oil pump	15 (0.59)	9 - 11 (0.35 - 0.43)	7 - 9 (0.28 - 0.35)
Applied pushing force	98 N (10 kg, 22 lb)		

Spark plug

Standard type	ZFR5E-11
Hot type	ZFR4E-11
Cold type	ZFR6E-11
Plug gap	1.0 - 1.1 mm (0.039 - 0.043 in)

Chassis and Body Maintenance

INSPECTION AND ADJUSTMENT

Wheel balance

Maximum allowable unbalance	Dynamic (At rim flange) g (oz)	10 (0.35) (one side)
	Static g (oz)	20 (0.71)

SECTION EM

CONTENTS

PRECAUTIONS 2
Supplemental Restraint System (SRS) "AIR BAG" 2
Parts Requiring Angular Tightening 2
Liquid Gasket Application Procedure 2
PREPARATION 3
Special Service Tools 3
Commercial Service Tools 5
OUTER COMPONENT PARTS 6
COMPRESSION PRESSURE 7
Measurement of Compression Pressure 7
OIL PAN 8
Removal 8
Installation 8
TIMING CHAIN 10
Removal 10
Inspection 11
Installation 12
OIL SEAL REPLACEMENT 14
Valve Oil Seal 14
Front Oil Seal 14
Rear Oil Seal 15
CYLINDER HEAD 16
Removal 17
Disassembly 19
Inspection 19
Assembly 25
Installation 26
ENGINE REMOVAL 29
Removal 30
Installation 31
CYLINDER BLOCK 32
Disassembly 33
Inspection 33
Assembly 39
SERVICE DATA AND SPECIFICATIONS (SDS) 42
General Specifications 42
Inspection and Adjustment 42

Supplemental Restraint System (SRS) "AIR BAG"

The Supplemental Restraint System "Air Bag", used along with a seat belt, helps to reduce the risk or severity of injury to the driver in a frontal collision. The Supplemental Restraint System consists of an air bag module (located in the center of the steering wheel), a diagnosis sensor unit, warning lamp, wiring harness, a crash zone sensor (4WD models) and spiral cable. Information necessary to service the system safely is included in the **RS section** of this Service Manual.

WARNING:

- **To avoid rendering the SRS inoperative, which could increase the risk of personal injury or death in the event of a collision which would result in air bag inflation, all maintenance must be performed by an authorized NISSAN dealer.**
- **Improper maintenance, including incorrect removal and installation of the SRS, can lead to personal injury caused by unintentional activation of the system.**
- **Do not use electrical test equipment on any circuit related to the SRS unless instructed to in this Service Manual. SRS wiring harnesses are covered with yellow insulation either just before the harness connectors or for the complete harness, for easy identification.**

Parts Requiring Angular Tightening

- Use an angle wrench for the final tightening of the following engine parts:
  (1) Cylinder head bolts
  (2) Connecting rod cap nuts
- Do not use a torque value for final tightening.
- The torque values for these parts are for a preliminary step.
- Ensure thread and seat surfaces are clean and coated with engine oil.

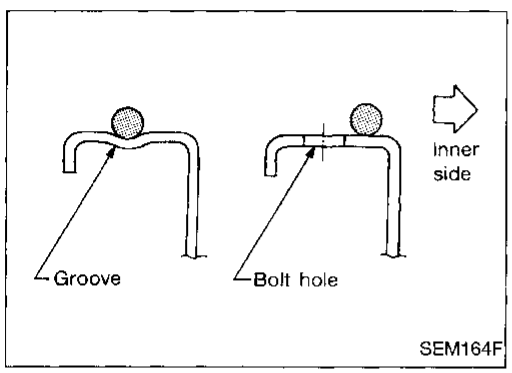

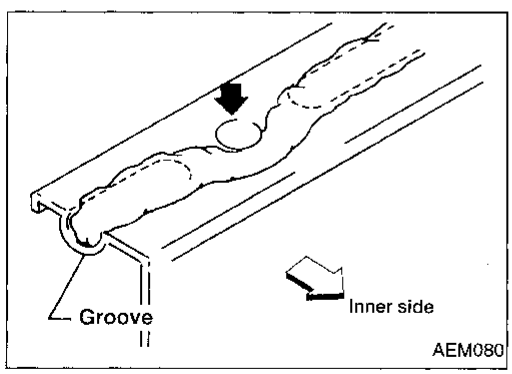

Liquid Gasket Application Procedure

a. **Use a scraper to remove all traces of old liquid gasket from mating surfaces and grooves. Also, completely clean any oil from these areas.**
b. **Apply a continuous bead of liquid gasket to mating surfaces. (Use Genuine Liquid Gasket or equivalent.)**
   - **For oil pan, be sure liquid gasket diameter is 3.5 to 4.5 mm (0.138 to 0.177 in).**
   - **For areas except oil pan, be sure liquid gasket diameter is 2.0 to 3.0 mm (0.079 to 0.118 in).**
c. **Apply liquid gasket around the inner side of bolt holes (unless otherwise specified).**
d. **Assembly should be done within 5 minutes after coating.**
e. **Wait at least 30 minutes before refilling engine oil and engine coolant.**

Special Service Tools

The actual shapes of Kent-Moore tools may differ from those of special service tools illustrated here.

Tool number (Kent-Moore No.) Tool name	Description	
ST0501S000 (—) Engine stand assembly ① ST05011000 (—) Engine stand ② ST05012000 (—) Base	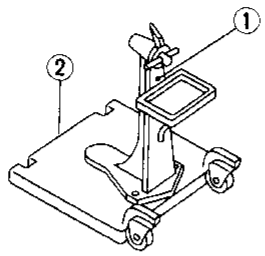 NT042	Disassembling and assembling
KV10105001 (—) Engine attachment	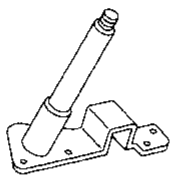 NT031	
KV10109250 (J26336-B) Valve spring compressor ① KV10109210 (—) Compressor ② KV10109220 (—) Adapter	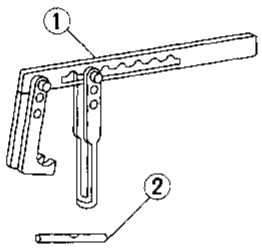 NT021	Disassembling and assembling valve components
KV109B0010 (—) Valve oil seal drift	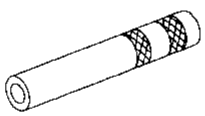 NT027	Installing valve oil seal
KV10110300 (—) Piston pin press stand assembly ① KV10110310 (—) Cap ② KV10110330 (—) Spacer ③ ST13030020 (—) Press stand ④ ST13030030 (—) Spring ⑤ KV10110340 (—) Drift ⑥ KV10110320 (—) Center shaft	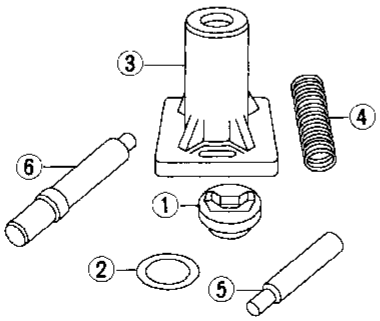 NT036	Disassembling and assembling piston with connecting rod

Special Service Tools (Cont'd)

Tool number (Kent-Moore No.) Tool name	Description	
EM03470000 (J8037) Piston ring compressor	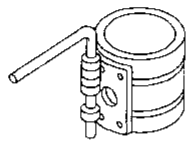 NT044	Installing piston assembly into cylinder bore
(J36467) Valve oil seal remover	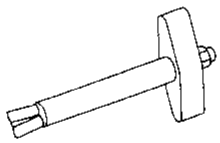 NT034	Displacement valve oil seal
ST16610001 (J23907) Pilot bushing puller	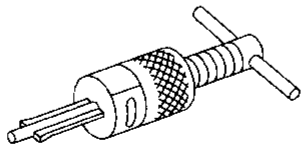 NT045	Removing crankshaft pilot bushing
KV10111100 (J37228) Seal cutter	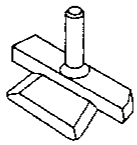 NT046	Removing oil pan
WS39930000 (—) Tube presser	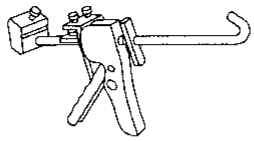 NT052	Pressing the tube of liquid gasket
KV10105800 (J25660-C) Chain stopper	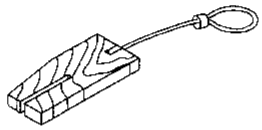 NT010	Holding the timing chain
KV10112100 (BT8653-A) Angle wrench	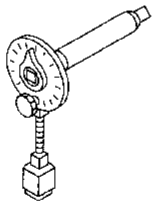 NT014	Tightening bolts for bearing cap, cylinder head, etc.

Commercial Service Tools

Tool name	Description	
Spark plug wrench	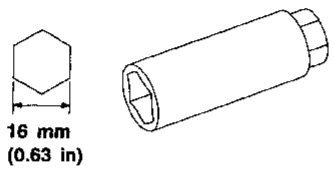 NT047	Removing and installing spark plug
Pulley holder	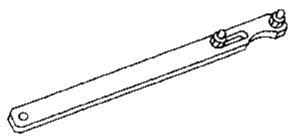 NT035	Holding camshaft pulley while tightening or loosening camshaft bolt
Valve seat cutter set	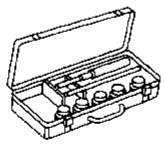 NT048	Finishing valve seat dimensions
Piston ring expander	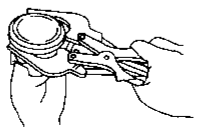 NT030	Removing and installing piston ring
Valve guide drift	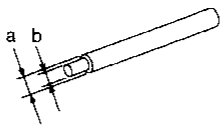 NT015	Removing and installing valve guide Diameter mm (in) Intake: a 10.5 (0.413); b 6.6 (0.260) Exhaust: a 11.5 (0.453); b 7.6 (0.299)
Valve guide reamer	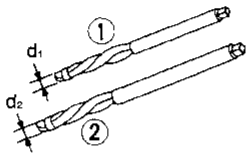 NT016	Reaming valve guide ① or hole for oversize valve guide ② **Intake:** **d_1 = 7.0 mm (0.276 in) dia.** **d_2 = 11.2 mm (0.441 in) dia.** **Exhaust:** **d_1 = 8.0 mm (0.315 in) dia.** **d_2 = 12.2 mm (0.480 in) dia.**

SEC. 120•140•147•150•163•164•210•220•221•230•231

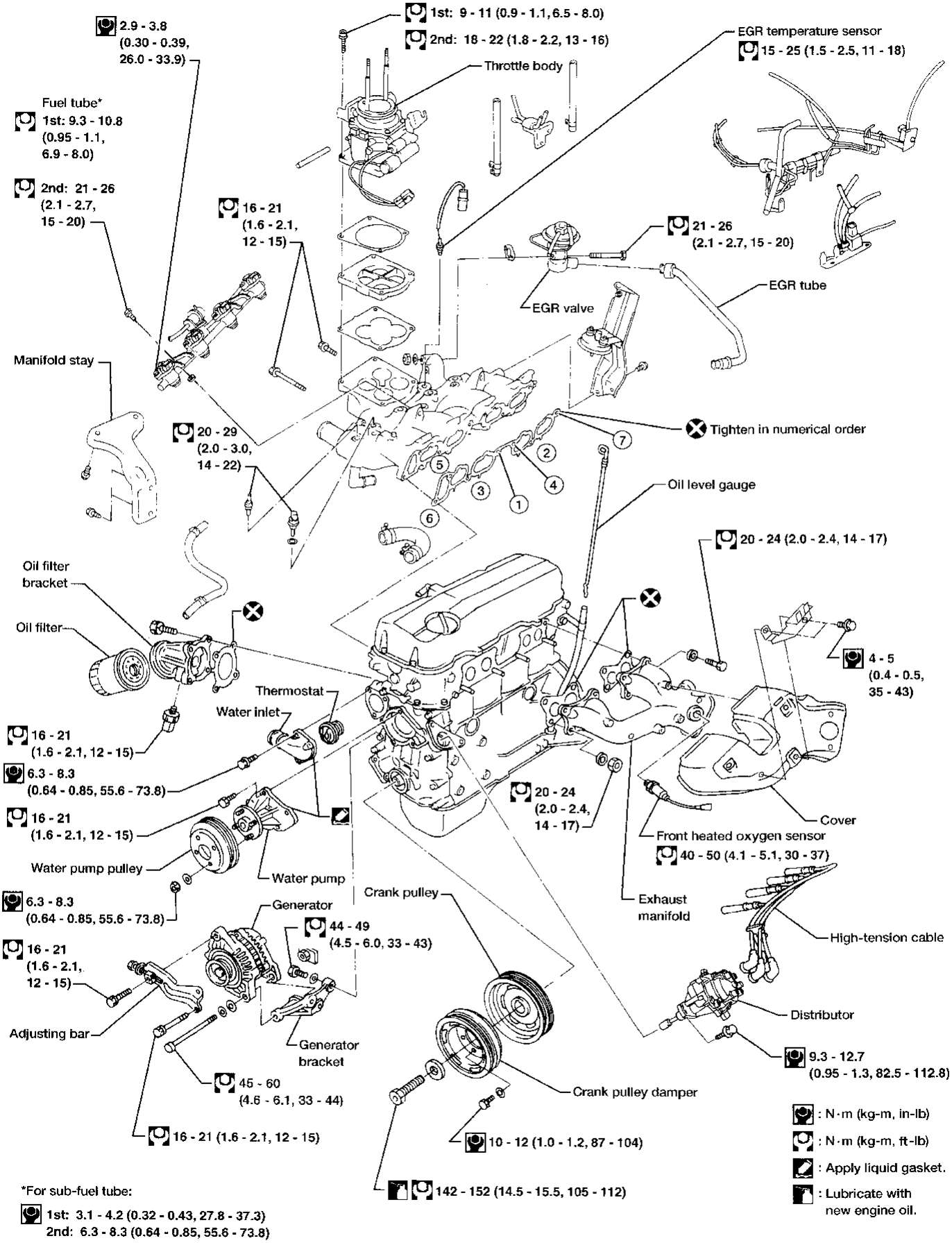

Measurement of Compression Pressure

1. Warm up engine.
2. Turn ignition switch OFF.
3. Release fuel pressure.
   Refer to EC section ("Fuel Pressure Release", "BASIC SERVICE PROCEDURE").
4. Remove all spark plugs.
5. Disconnect distributor center cable.

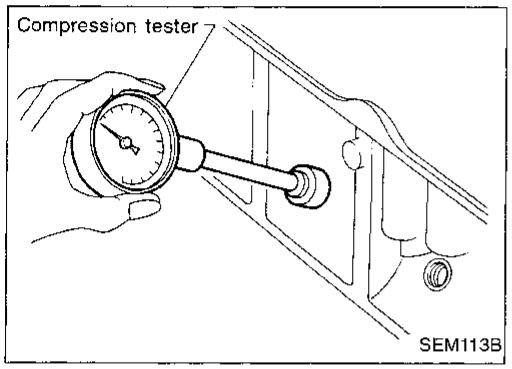

6. Attach a compression tester to No. 1 cylinder.
7. Depress accelerator pedal fully to keep throttle valve wide open.
8. Crank engine and record highest gauge indication.
9. Repeat the measurement on each cylinder.

- **Always use a fully-charged battery to obtain specified engine speed.**

Compression pressure:
kPa (kg/cm^2, psi)/rpm
Standard
1,324 (13.5, 192)/300
Minimum
981 (10, 142)/300
Difference limit between cylinders
98 (1.0, 14)/300

10. If compression in one or more cylinders is low:

a. Pour a small amount of engine oil into cylinders through spark plug holes.
b. Retest compression.

- **If adding oil helps compression, piston rings may be worn or damaged. If so, replace piston rings after checking piston.**
- **If pressure stays low, a valve may be sticking or seating improperly. Inspect and repair valve and valve seat. (Refer to SDS.) If valve or valve seat is damaged excessively, replace them.**
- **If compression stays low in two cylinders that are next to each other:**

a. The cylinder head gasket may be leaking, or
b. Both cylinders may have valve component damage. Inspect and repair as necessary.

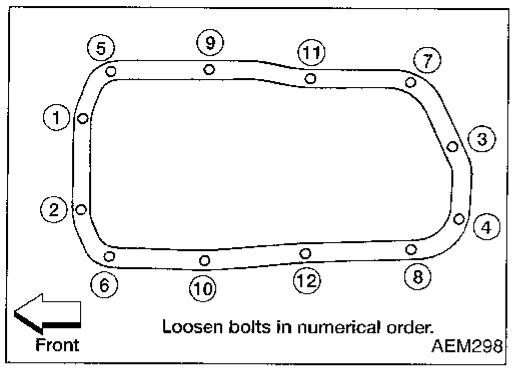

Removal

1. Raise vehicle and support it with safety stands.
2. Drain engine oil.
3. Remove front stabilizer bar securing bolts and nuts from side member.
4. Lift engine.
5. Remove oil pan bolts.

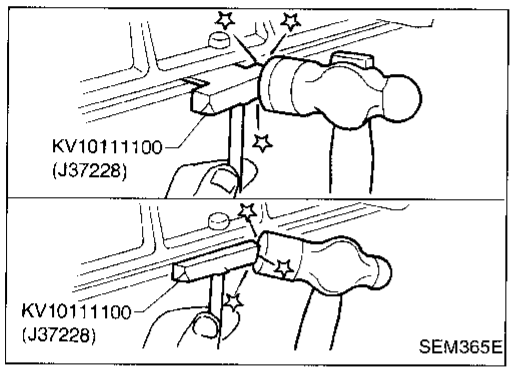

6. Remove oil pan.

a. Insert Tool between cylinder block and oil pan.

- **Be careful not to damage aluminum mating surface.**
- **Do not insert screwdriver, or oil pan flange will be damaged.**

b. Slide Tool by tapping on the side of the Tool with a hammer.

7. Pull out oil pan from front side.

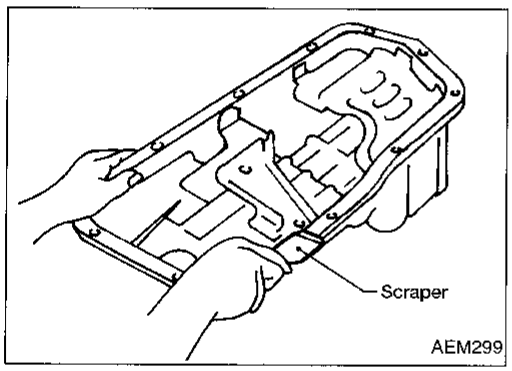

Installation

1. Use a scraper to remove old liquid gasket from mating surface of oil pan.

- **Also remove traces of liquid gasket from mating surface of cylinder block.**

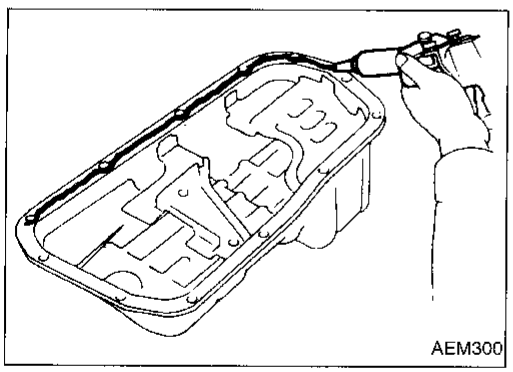

2. Apply a continuous bead of liquid gasket to mating surface of oil pan.

- **Use Genuine Liquid Gasket or equivalent.**
- **Apply to groove on mating surface.**
- **Allow 7 mm (0.28 in) clearance around bolt hole.**

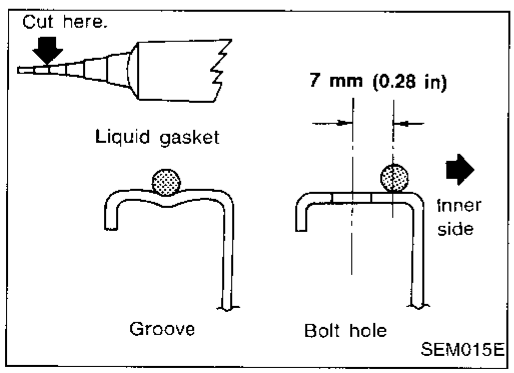

Installation (Cont'd)

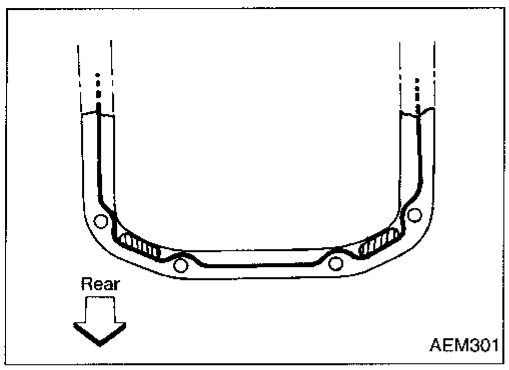

- **Be sure liquid gasket diameter is 3.5 to 4.5 mm (0.138 to 0.177 in).**
- **Attaching should be done within 5 minutes after coating.**

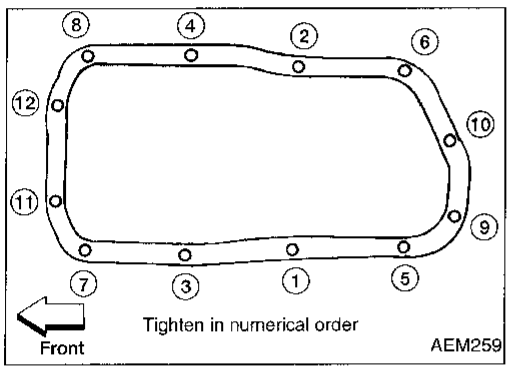

3. Install oil pan.
- **Tighten oil pan bolts in numerical order.**
  : 6.3 - 8.3 N·m (0.64 - 0.85 kg-m, 55.6 - 73.8 in-lb)
- **Wait at least 30 minutes before refilling engine oil.**
4. Install parts in reverse order of removal.

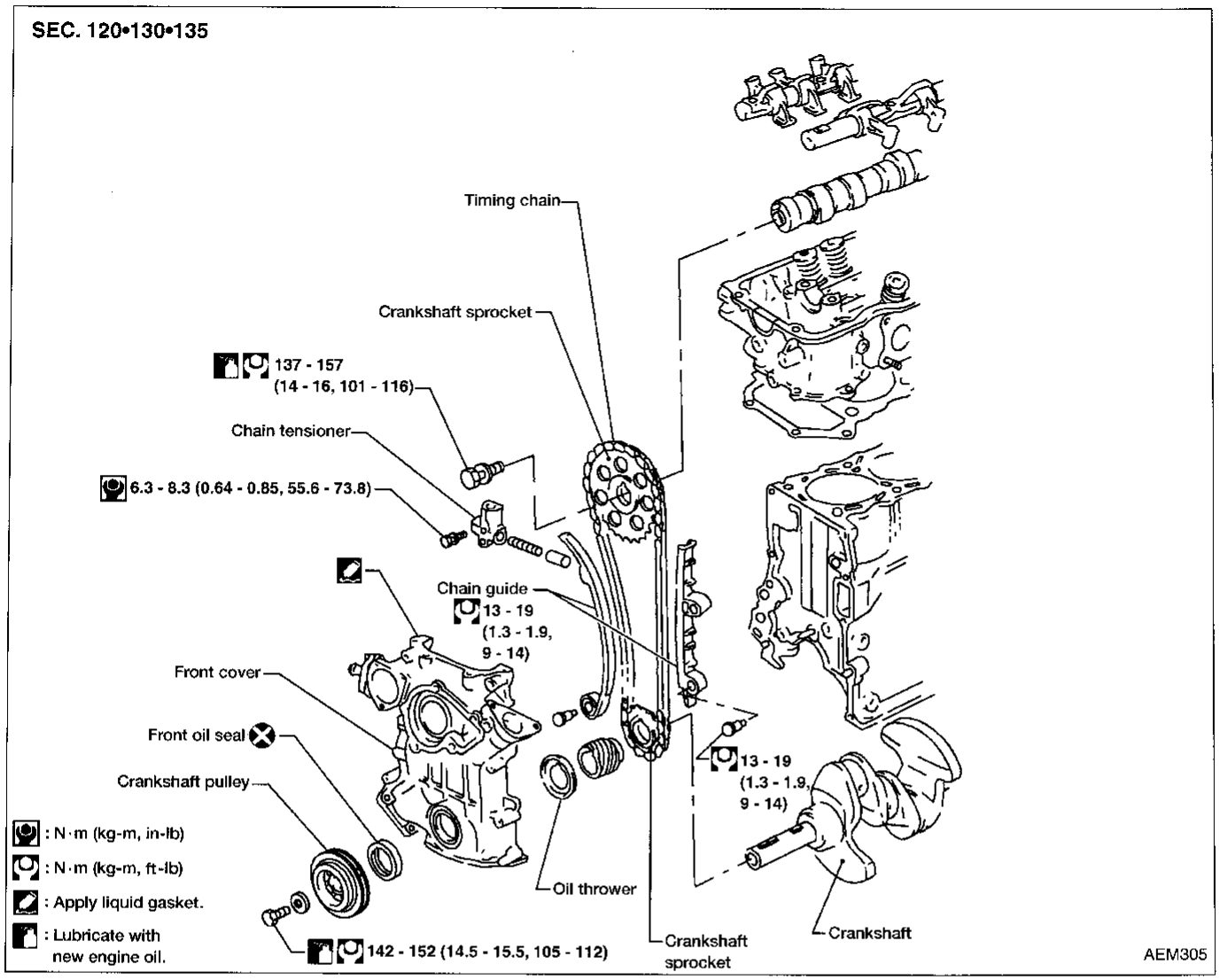

CAUTION:

- **After removing timing chain, do not turn crankshaft and camshaft separately, or valves will strike piston heads.**
- **When installing rocker arms, camshafts, chain tensioner, oil seals, or other sliding parts, lubricate contacting surfaces with new engine oil.**
- **Apply new engine oil to bolt threads and seat surfaces when installing cylinder head, camshaft sprockets, crankshaft pulley, and camshaft brackets.**

Removal

1. Disconnect battery terminal.
2. Drain coolant from radiator.
3. Remove radiator shroud and cooling fan.
4. Remove the following belts.

- Power steering drive belt
- Compressor drive belt
- Generator drive belt

Removal (Cont'd)

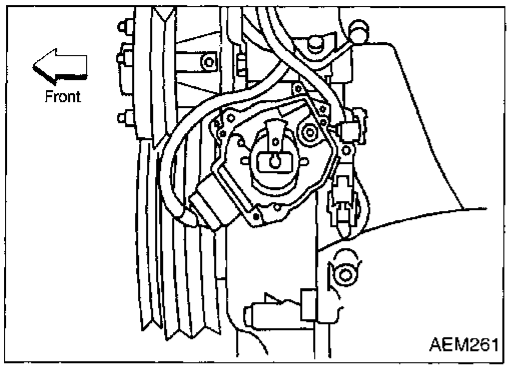

5. Remove all spark plugs.
6. Set No. 1 piston at TDC on its compression stroke.

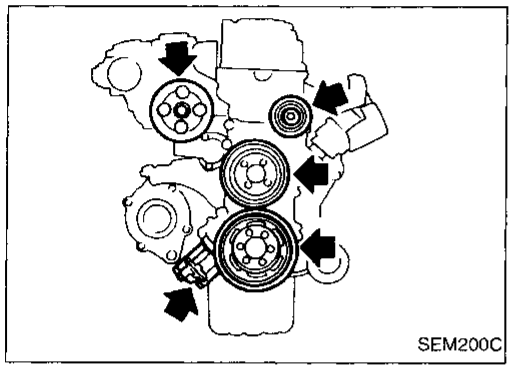

7. Remove the following parts.
- Power steering pump, idler pulley and power steering pump brackets
- Compressor idler pulley
- Crankshaft pulley with a suitable puller
- Oil pump with pump drive spindle
- Rocker cover

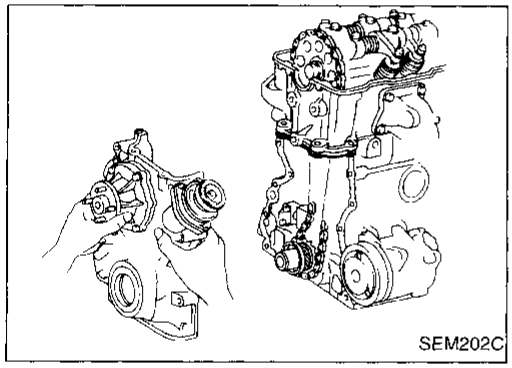

8. Remove oil pan. (Refer to OIL PAN, EM-9.)
9. Remove front cover.
- Inspect for oil leakage at front oil seal. Replace seal if oil leak is present.

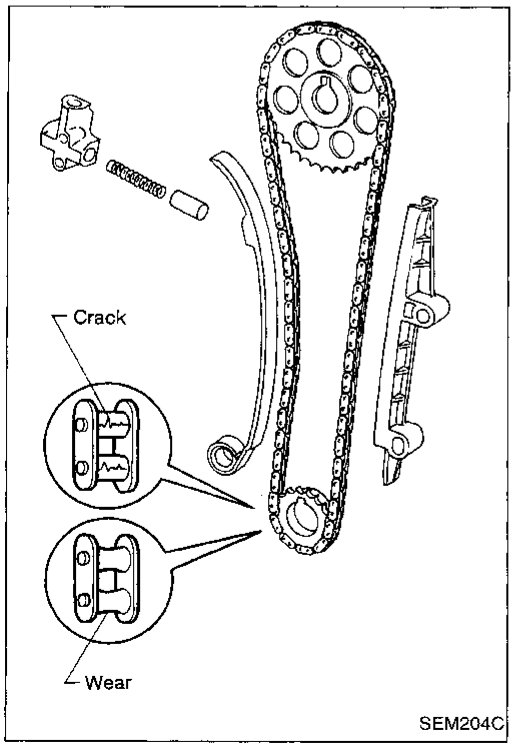

10. Remove the following parts.
- **For retiming during cylinder head removal/installation, apply paint mark to timing chain at mating mark of camshaft sprocket.**
- Chain tensioner
- Chain guides
- Timing chain and camshaft sprocket
- Oil thrower, oil pump drive gear and crankshaft sprocket

Inspection

- **Check for cracks and excessive wear at roller links. Replace chain if necessary.**

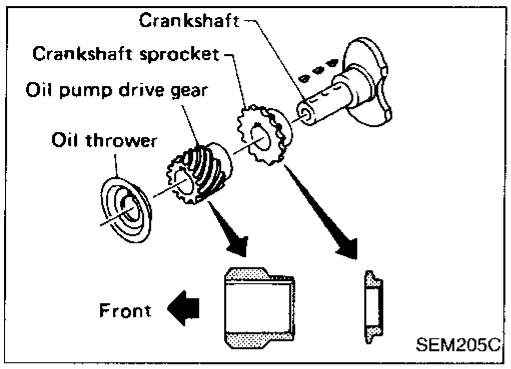

Installation

1. Install crankshaft sprocket, oil pump drive gear and oil thrower.
- **Make sure that mating marks on crankshaft sprocket face front of engine.**

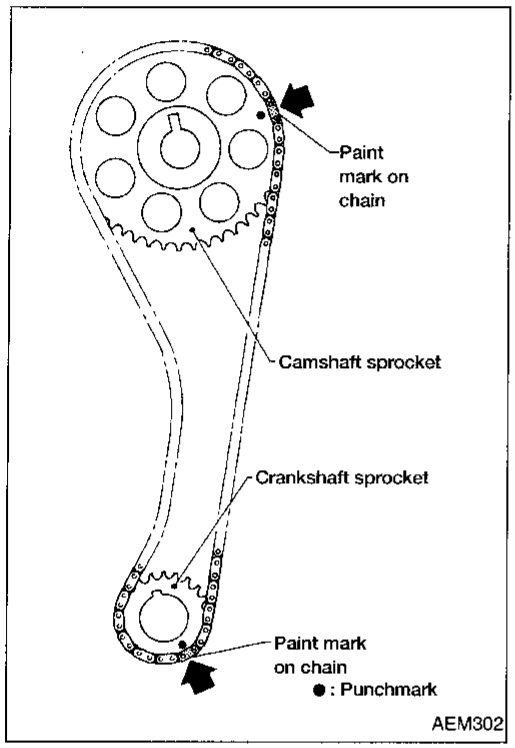

2. Install camshaft sprocket.
3. Confirm that No. 1 piston is set at TDC on its compression stroke.
4. Install timing chain.
- **Set timing chain by aligning paint marks with mating marks of crankshaft sprocket and camshaft sprocket.**

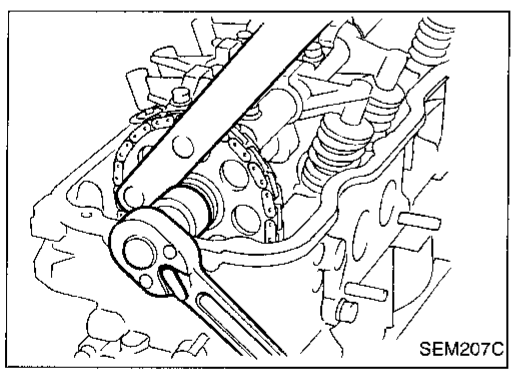

5. Tighten camshaft sprocket bolt.
6. Install chain guide and chain tensioner.

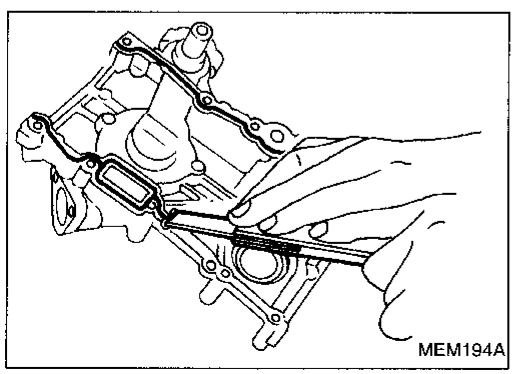

7. Use a scraper to remove old liquid gasket from mating surface of front cover.
- **Also remove traces of liquid gasket from mating surface of cylinder block.**

Installation (Cont'd)

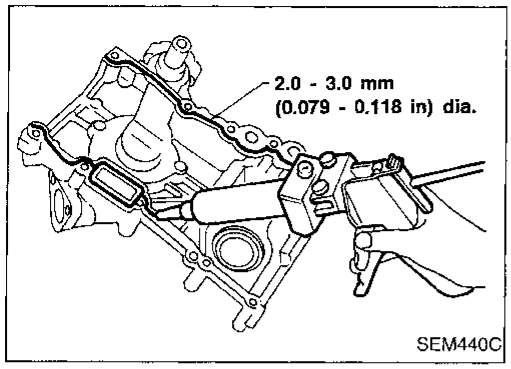

8. Apply a continuous bead of liquid gasket to front cover.
- **Use Genuine Liquid Gasket or equivalent.**
- **Be sure to install new front oil seal in the right direction. Refer to EM-14.**

9. Apply lithium grease to sealing lip of crankshaft oil seal.

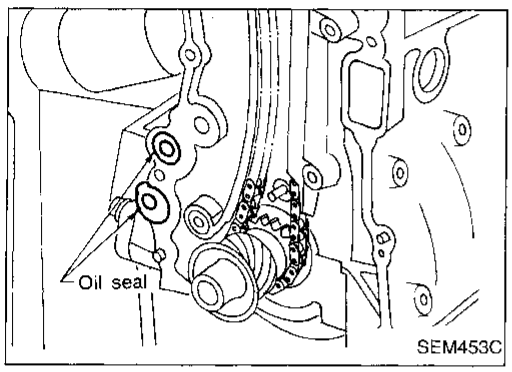

10. Install front cover.
- **Be careful not to damage cylinder head gasket.**
- **Be careful not to damage front oil seal when installing front cover.**

11. Install new rubber plug. (Refer to "Installation", CYLINDER HEAD, EM-27.)
12. Install oil pan. (Refer to OIL PAN, EM-9.)

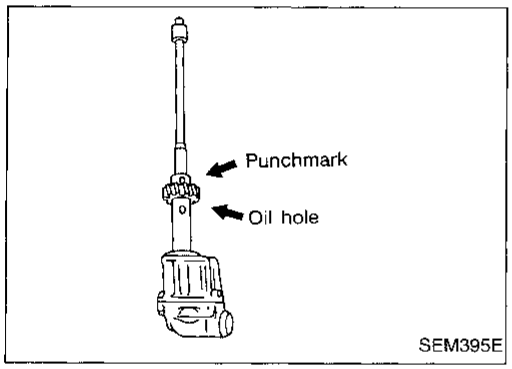

13. Install oil pump and distributor driving spindle with new gasket in front cover.

a. Assemble oil pump and driving spindle, aligning punchmark on driving spindle with oil hole.

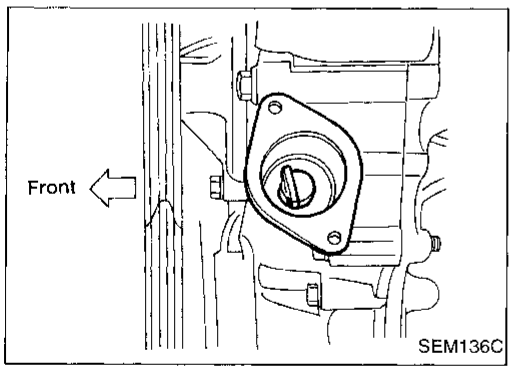

b. Make sure that driving spindle is set as shown in figure.

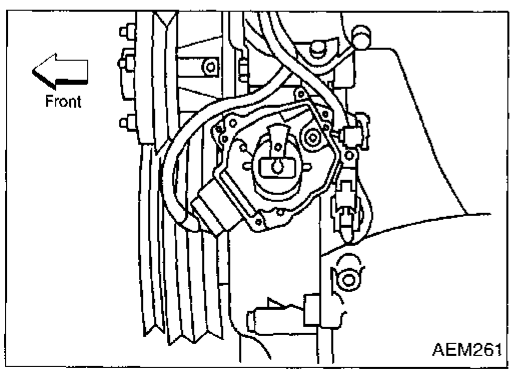

14. Install distributor.
15. Make sure that No. 1 piston is set at TDC and that distributor rotor is set at No. 1 cylinder spark position.

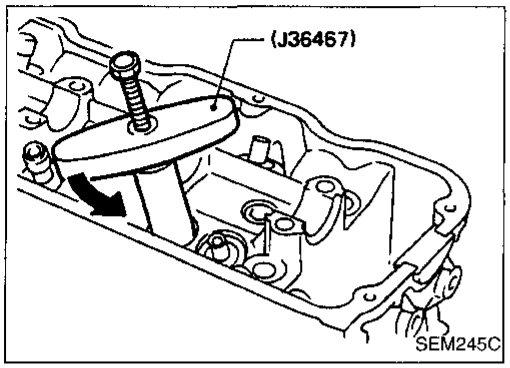

Valve Oil Seal

1. Remove rocker cover.
2. Remove rocker shaft assembly. (Refer to "Disassembly", CYLINDER HEAD, EM-19.)
3. Remove valve spring and valve oil seal with Tool or suitable tool.

- **Piston concerned should be set at TDC to prevent valve from falling.**

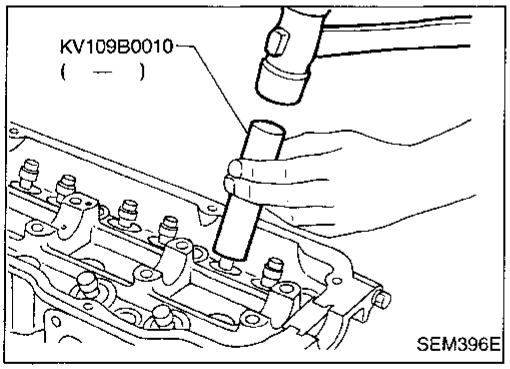

4. Apply engine oil to new valve oil seal and install it with Tool.

- **Before installing valve oil seal, install valve spring seat.**

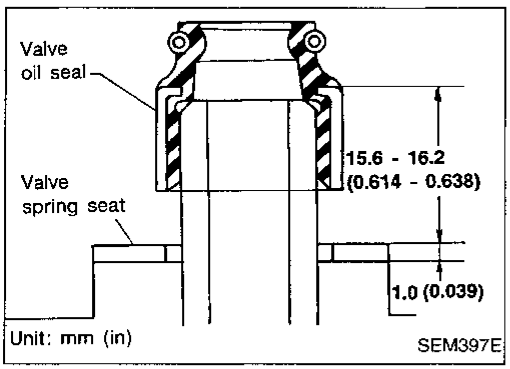

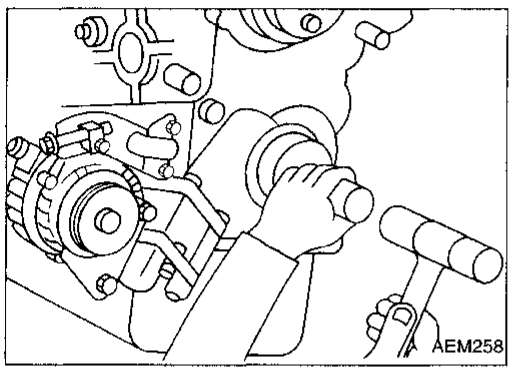

Front Oil Seal

1. Remove radiator shroud and crankshaft pulley.
2. Remove front oil seal.

- **Be careful not to scratch front cover.**

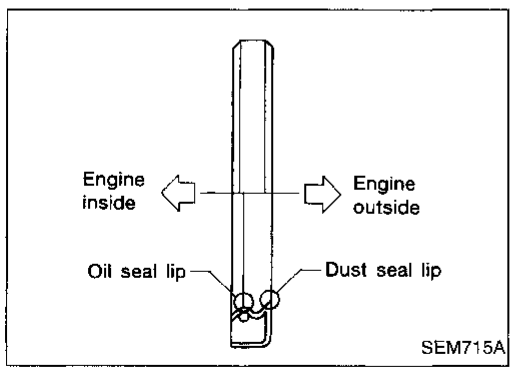

3. Apply engine oil to new oil seal and install it using suitable tool.

- **Install new oil seal in the direction shown.**

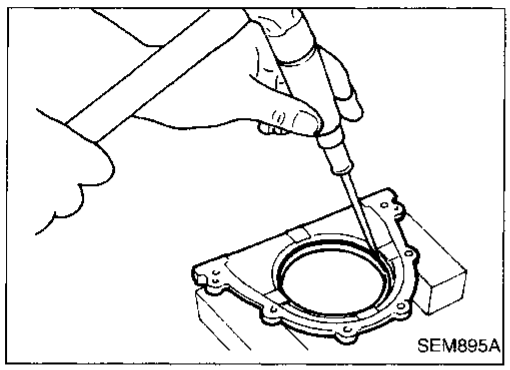

Rear Oil Seal

1. Remove flywheel or drive plate.
2. Remove rear oil seal retainer.
3. Remove rear oil seal from retainer.

- **Be careful not to scratch rear oil seal retainer.**

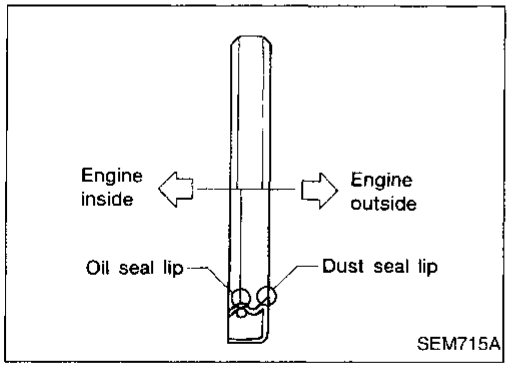

4. Apply engine oil to new oil seal and install it using suitable tool.

- **Install new oil seal in the direction shown.**

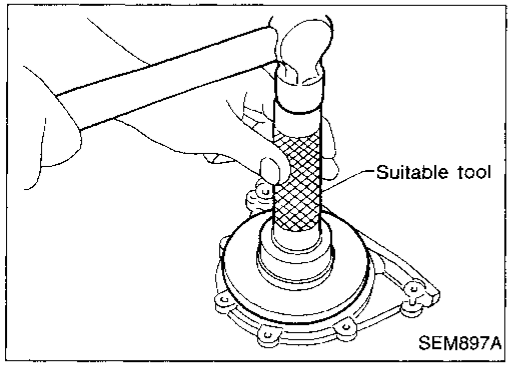

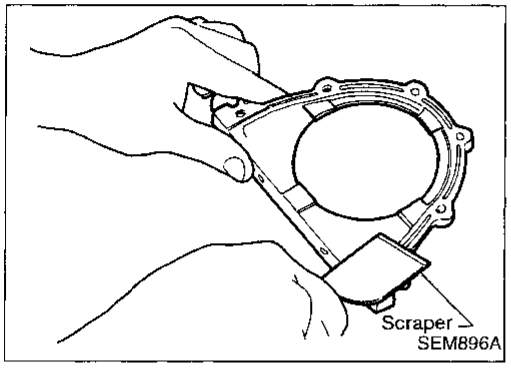

5. Install rear oil seal retainer.

a. Before installing rear oil seal retainer, remove all traces of liquid gasket from mating surface using a scraper.

- **Also remove traces of liquid gasket from mating surface of cylinder block.**

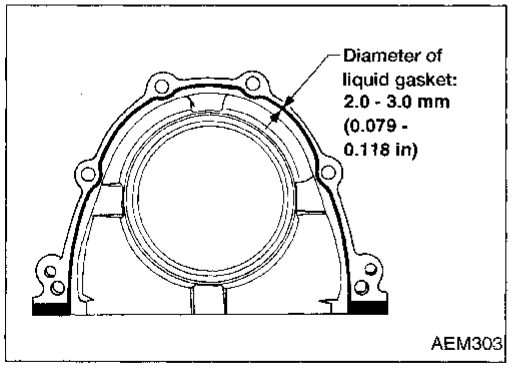

b. Apply a continuous bead of liquid gasket to mating surface of rear oil seal retainer.

- **Use Genuine Liquid Gasket or equivalent.**
- **Apply around inner side of bolt holes.**

SEC. 111•130

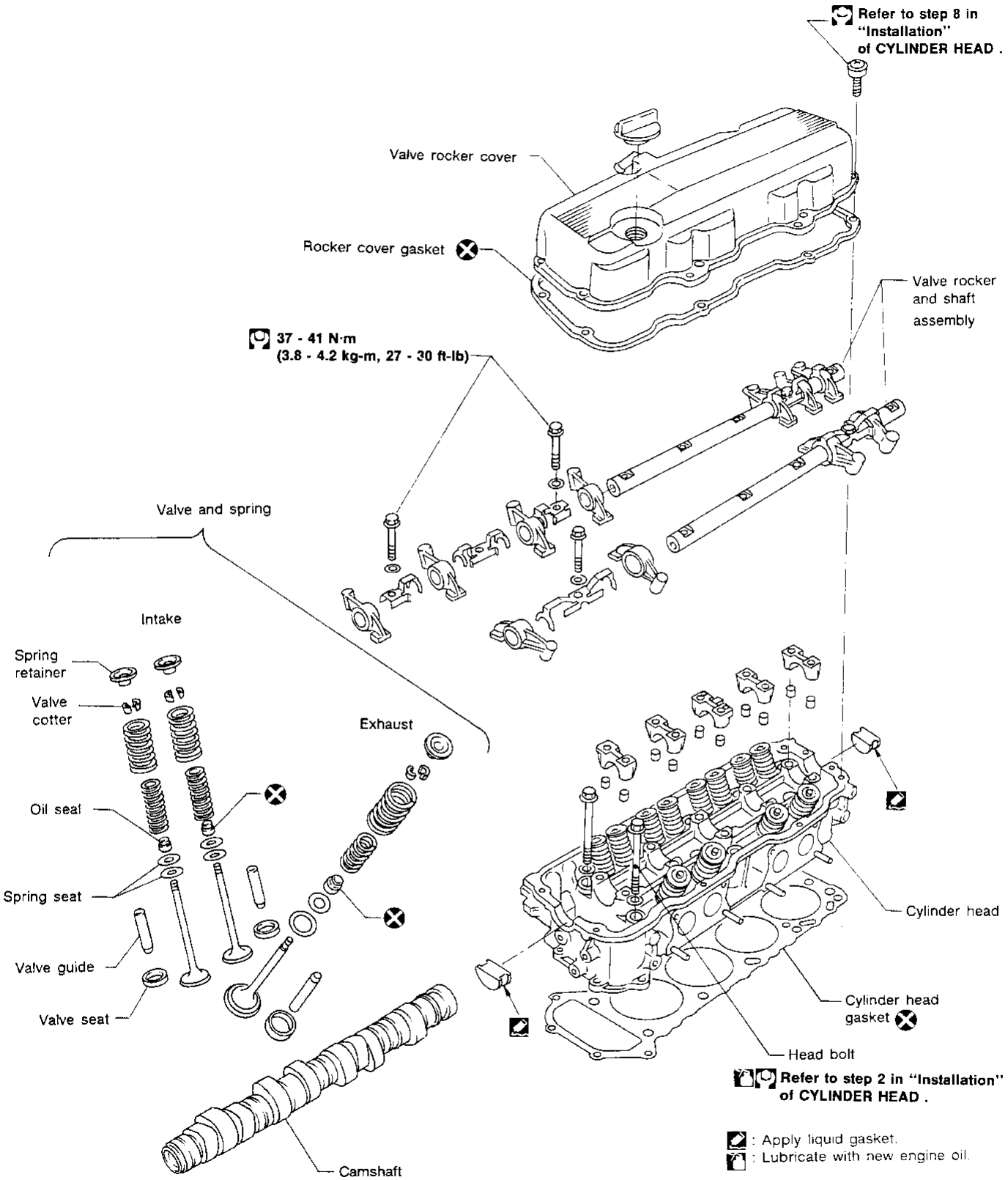

SEM552EA

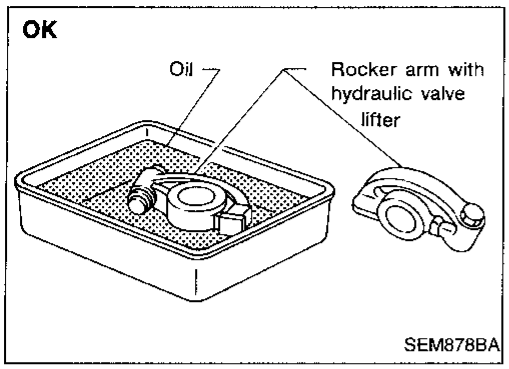

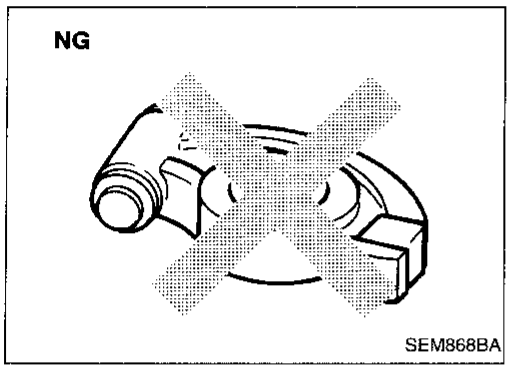

CAUTION:

- **When installing rocker arms, camshaft and oil seal, lubricate contacting surfaces with new engine oil.**
- **When tightening cylinder head bolts and rocker shaft bolts, lubricate bolt threads and seat surfaces with new engine oil.**
- **Hydraulic valve lifters are installed in each rocker arm. If hydraulic valve lifter is kept on its side, even when installed in rocker arm, there is a risk of air entering it. When rocker arms are removed, stand them straight up or soak them in new engine oil.**
- **Do not disassemble hydraulic valve lifter.**
- **Attach tags to valve lifters so as not to mix them up.**

Removal

1. Release fuel pressure. Refer to EC section ("Fuel Pressure Release", "BASIC SERVICE PROCEDURE").
2. Drain coolant from radiator and drain plug of block.
3. Remove the following parts.
- Power steering drive belt
- Power steering pump, idler pulley and power steering brackets
- Vacuum hoses of swirl control valve and pressure control solenoid valve
- Accelerator wire bracket
4. Disconnect EGR tube from exhaust manifold.
5. Remove bolts which hold intake manifold collector to intake manifold.
6. Remove bolts which hold intake manifold to cylinder head while raising collector upwards.
7. Remove rocker cover.
- **When removing rocker cover, do not hit rocker cover against rocker arm.**

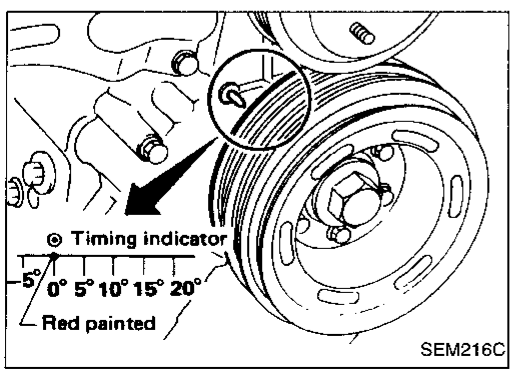

8. Set No. 1 piston at TDC on its compression stroke.

Removal (Cont'd)

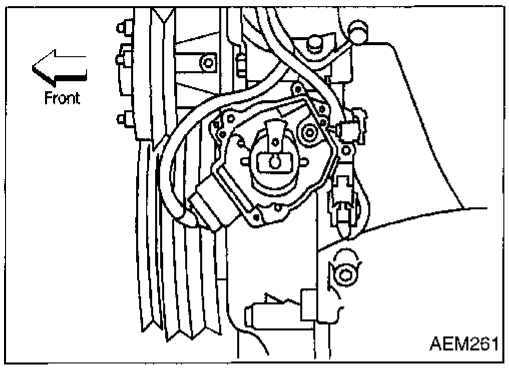

- Make sure No. 1 cylinder is at TDC by looking at the distributor rotor position.

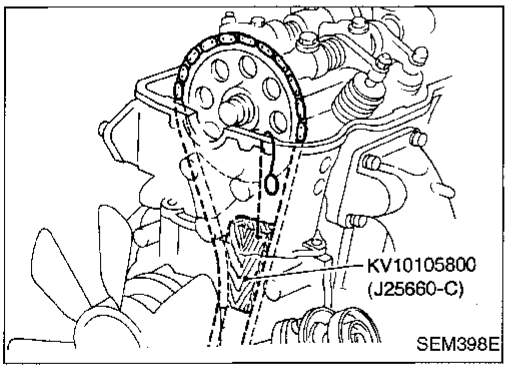

9. Loosen camshaft sprocket bolt.
- Support timing chain by using Tool as shown in figure.

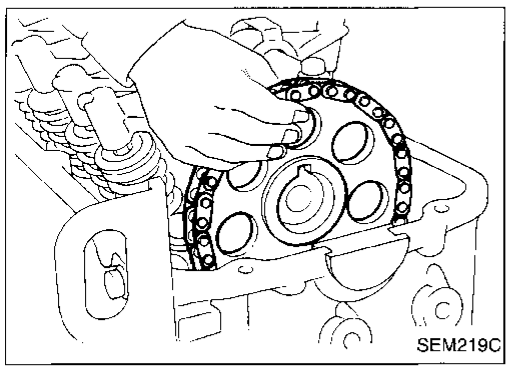

10. Remove camshaft sprocket.
- **For retiming during installation, apply paint marks to timing chain at mating marks of crankshaft sprocket and camshaft sprocket.**

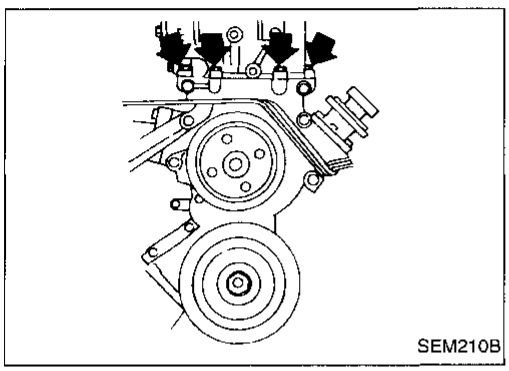

11. Remove front timing cover to cylinder head bolts.

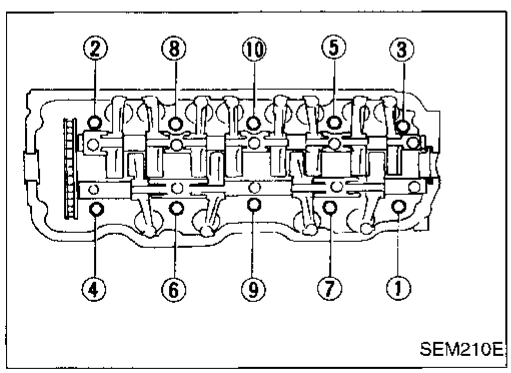

12. Remove cylinder head.
- **Loosen in numerical order.**
- **A warped or cracked cylinder head could result from removing in incorrect order.**
- **Loosen cylinder head bolts in two or three steps.**

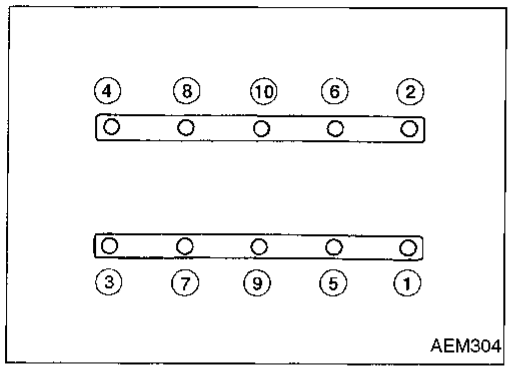

Disassembly

1. Remove rocker shaft assembly.

a. When loosening bolts, evenly loosen as shown in figure at left.

b. Bolts should be loosened in two or three steps.

2. Remove camshaft.

- **Before removing camshaft, measure camshaft end play. (Refer to "Inspection".)**

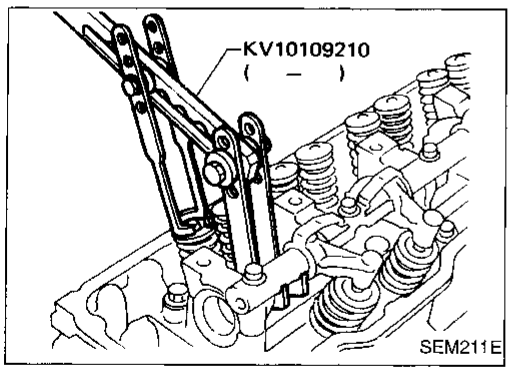

3. Remove valve components with Tool.
4. Remove valve oil seals. (Refer to OIL SEAL REPLACEMENT, EM-14.)

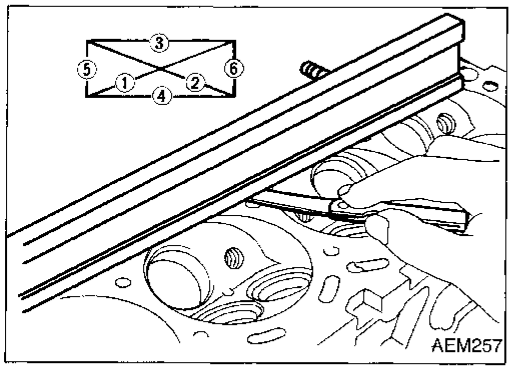

Inspection

CYLINDER HEAD DISTORTION

- Clean surface of cylinder head.
- Use a reliable straightedge and feeler gauge to check the flatness of cylinder head surface.
- Check along six positions shown in figure.

Head surface flatness:

Standard

Less than 0.03 mm (0.0012 in)

Limit

0.1 mm (0.004 in)

If beyond the specified limit, replace or resurface.

Resurfacing limit:

The limit for cylinder head resurfacing is determined by the cylinder block resurfacing.

Amount of cylinder head resurfacing is "A"

Amount of cylinder block resurfacing is "B"

The maximum limit is as follows:

A + B = 0.2 mm (0.008 in)

After resurfacing cylinder head, check that camshaft rotates freely by hand. If resistance is felt, cylinder head must be replaced.

Nominal cylinder head height:

98.8 - 99.0 mm (3.890 - 3.898 in)

CAMSHAFT VISUAL CHECK

Check camshaft for scratches, seizure and wear.

Inspection (Cont'd)

CAMSHAFT RUNOUT

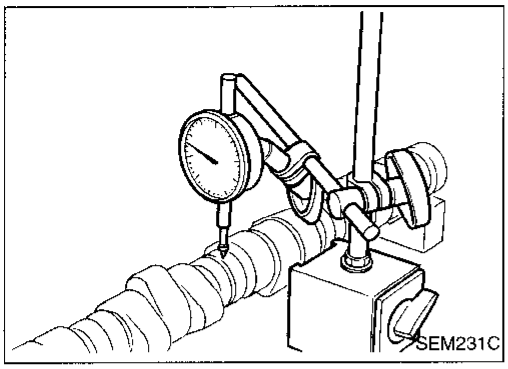

1. Measure camshaft runout at the center journal.
   Runout (Total indicator reading):
   0 - 0.02 mm (0 - 0.0008 in)
2. If it exceeds the limit, replace camshaft.

CAMSHAFT CAM HEIGHT

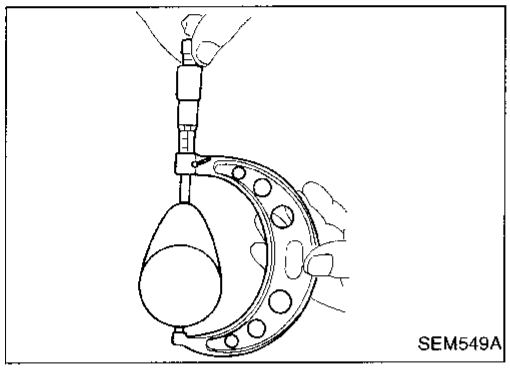

1. Measure camshaft cam height.
   Standard cam height:
   44.43 - 44.58 mm (1.7492 - 1.7551 in)
   Cam height wear limit:
   0.2 mm (0.008 in)
2. If wear is beyond the limit, replace camshaft.

CAMSHAFT JOURNAL CLEARANCE

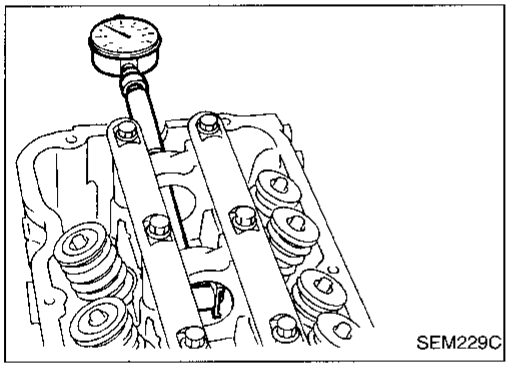

1. Install camshaft bracket and rocker shaft and tighten bolts to the specified torque.
2. Measure inner diameter of camshaft bearing.
   Standard inner diameter:
   33.000 - 33.025 mm (1.2992 - 1.3002 in)

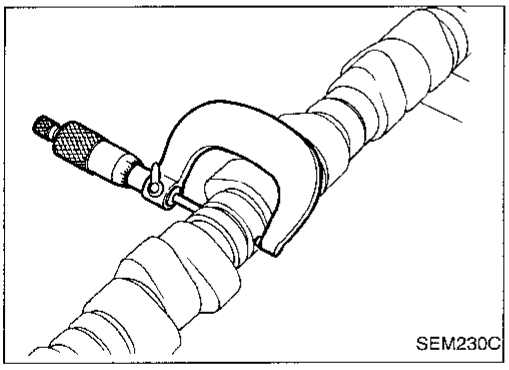

3. Measure outer diameter of camshaft journal.
   Standard outer diameter:
   32.935 - 32.955 mm (1.2967 - 1.2974 in)
4. If clearance exceeds the limit, replace camshaft and/or cylinder head.
   Camshaft journal clearance:
   Standard
   0.045 - 0.090 mm (0.0018 - 0.0035 in)
   Limit
   0.12 mm (0.0047 in)

CAMSHAFT END PLAY

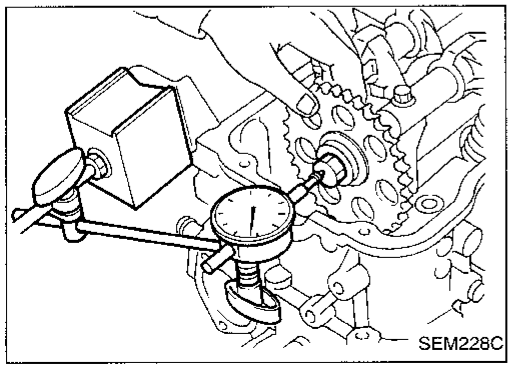

1. Install camshaft in cylinder head.
2. Measure camshaft end play.
   Camshaft end play:
   Standard
   0.07 - 0.15 mm (0.0028 - 0.0059 in)
   Limit
   0.2 mm (0.008 in)
3. If end play exceeds the limit, replace camshaft and remeasure camshaft end play.

- If end play still exceeds the limit after replacing camshaft, replace cylinder head.

Inspection (Cont'd)

CAMSHAFT SPROCKET RUNOUT

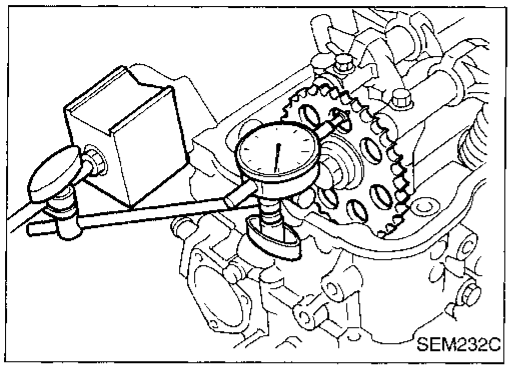

1. Install sprocket on camshaft.
2. Measure camshaft sprocket runout.
   Runout (Total indicator reading):
   Limit 0.12 mm (0.0047 in)
3. If it exceeds the limit, replace camshaft sprocket.

VALVE GUIDE CLEARANCE

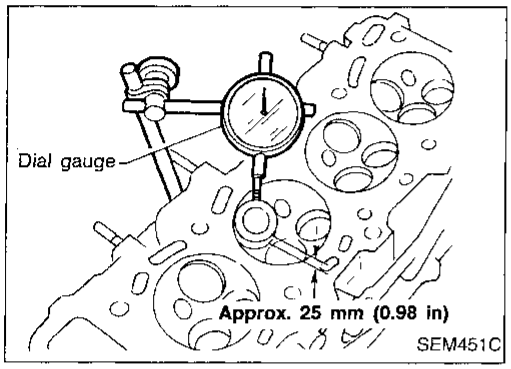

1. Measure valve deflection as shown in illustration. (Valve and valve guide wear the most in this direction.)
   Valve deflection limit (Dial gauge reading):
   0.15 mm (0.0059 in)

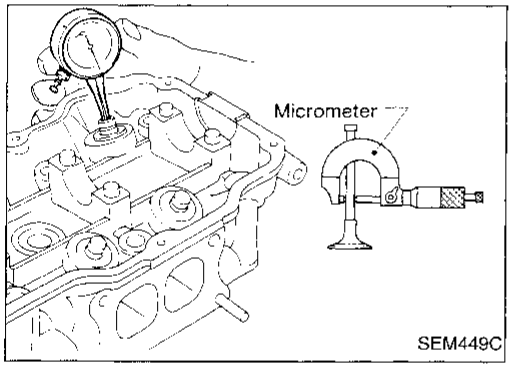

2. If it exceeds the limit, check valve to valve guide clearance.
a. Measure valve stem diameter and valve guide inner diameter.
b. Check that clearance is within specification.
   Valve to valve guide clearance = valve guide inner diameter − valve stem diameter:
   Standard
   Intake
   0.020 - 0.053 mm (0.0008 - 0.0021 in)
   Exhaust
   0.040 - 0.070 mm (0.0016 - 0.0028 in)
   Limit 0.1 mm (0.004 in)
c. If it exceeds the limit, replace valve and remeasure clearance.
- If clearance still exceeds the limit after replacing valve, replace the valve guide.

Inspection (Cont'd)

VALVE GUIDE REPLACEMENT

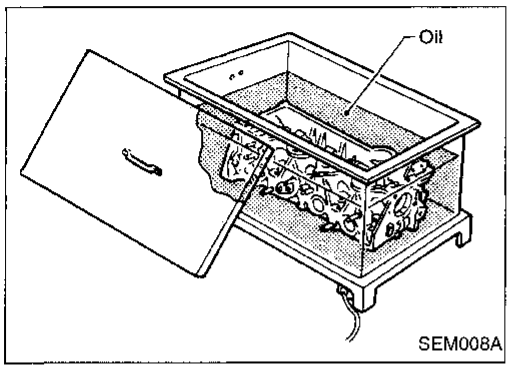

1. To remove valve guide, heat cylinder head to 150 to 160°C (302 to 320°F).

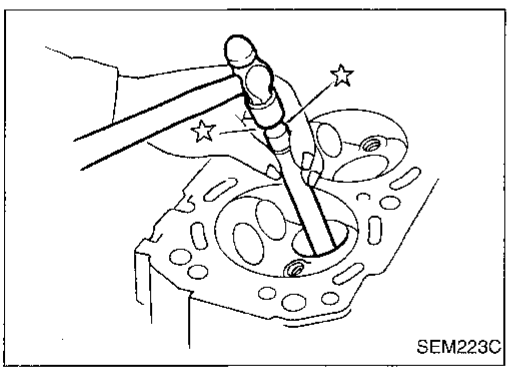

2. Drive out valve guide using a hammer and suitable tool or a press [under a 20 kN (2 ton, 2.2 US ton, 2.0 Imp ton) pressure].

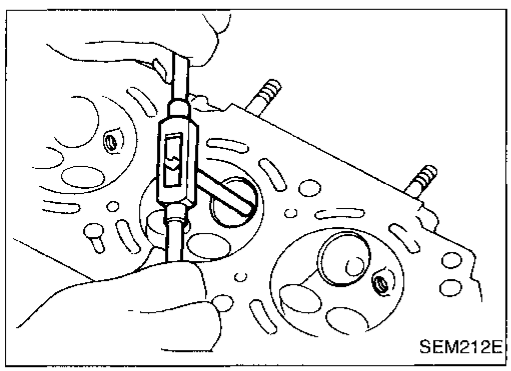

3. Ream cylinder head valve guide hole.
   Valve guide hole diameter (for service parts):
   - **Intake**
     11.175 - 11.196 mm (0.4400 - 0.4408 in)
   - **Exhaust**
     12.175 - 12.196 mm (0.4793 - 0.4802 in)

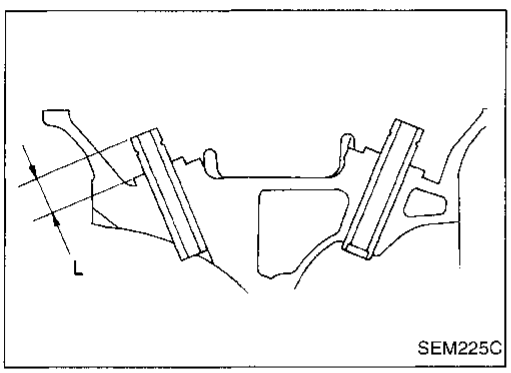

4. Heat cylinder head to 150 to 160°C (302 to 320°F) and press service valve guide onto cylinder head.
   Projection "L":
   14.9 - 15.1 mm (0.587 - 0.594 in)
5. Ream valve guide.
   Finished size:
   - **Intake**
     7.000 - 7.018 mm (0.2756 - 0.2763 in)
   - **Exhaust**
     8.000 - 8.018 mm (0.3150 - 0.3157 in)

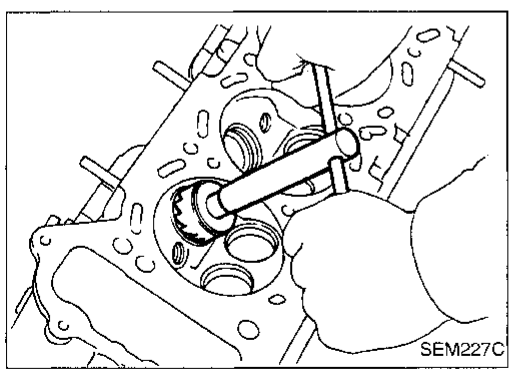

VALVE SEATS

Check valve seats for pitting at contact surface. Resurface or replace if excessively worn.

- **Before repairing valve seats, check valve and valve guide for wear. If they have worn, replace them. Then correct valve seat.**
- **Use both hands to cut uniformly.**

Inspection (Cont'd)

REPLACING VALVE SEAT FOR SERVICE PARTS

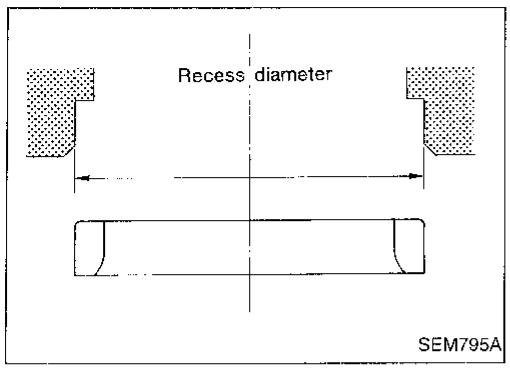

1. Bore out old seat until it collapses. Set machine depth stop so that boring cannot contact bottom face of seat recess in cylinder head.
2. Ream cylinder head recess.
   Reaming bore for service valve seat
   Oversize [0.5 mm (0.020 in)]:
   Intake 36.500 - 36.516 mm (1.4370 - 1.4376 in)
   Exhaust 42.500 - 42.516 mm (1.6732 - 1.6739 in)

Use the valve guide center for reaming to ensure valve seat will have the correct fit.

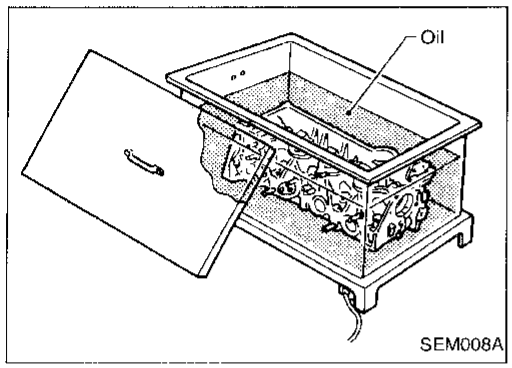

3. Heat cylinder head to 150 to 160°C (302 to 320°F).
4. Press fit valve seat until it seats on the bottom.

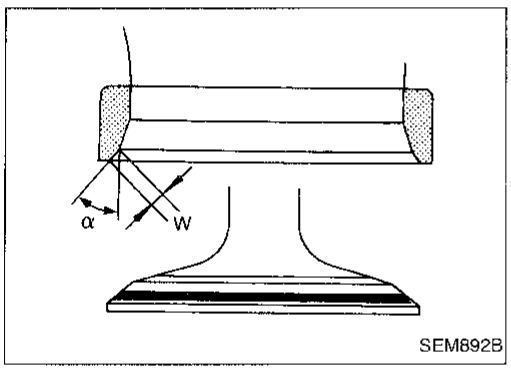

5. Cut or grind valve seat using suitable tool of the specified dimensions. Refer to SDS, EM-43.
6. After cutting, lap valve seat with abrasive compound.
7. Check valve seating condition.
   Seat face angle "α":
   45 deg.
   Contacting width "W":
   Intake
   1.6 - 1.7 mm (0.063 - 0.067 in)
   Exhaust
   1.7 - 2.1 mm (0.067 - 0.083 in)

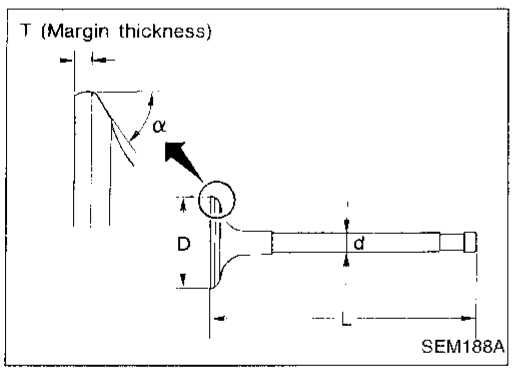

VALVE DIMENSIONS

Check dimensions of each valve. Refer to SDS, EM-44.
When valve head has been worn down to 0.5 mm (0.020 in) in margin thickness, replace valve.

Grinding allowance for valve stem tip is 0.2 mm (0.008 in) or less.

Inspection (Cont'd)

VALVE SPRING

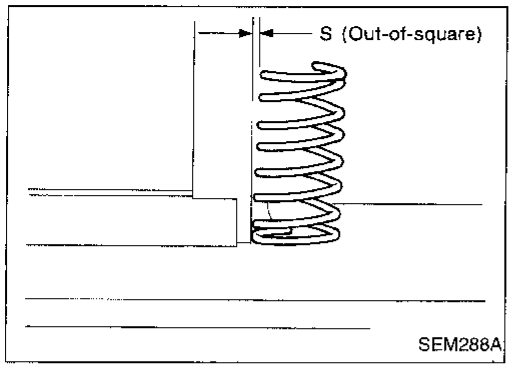

Squareness

1. Measure dimension "S".
   Out-of-square "S":
   Outer
   Intake Less than 2.5 mm (0.098 in)
   Exhaust Less than 2.3 mm (0.091 in)
   Inner
   Intake Less than 2.3 mm (0.091 in)
   Exhaust Less than 2.1 mm (0.083 in)
2. If it exceeds the limit, replace spring.

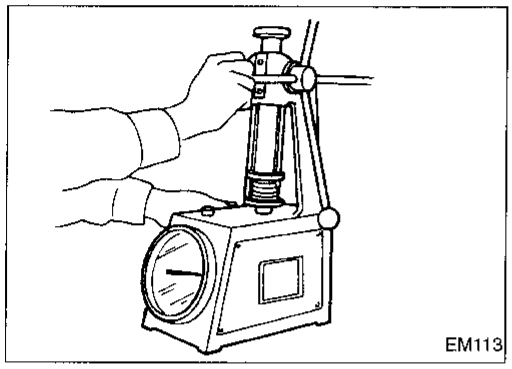

Pressure

Check valve spring pressure at specified spring height.

Pressure: N (kg, lb) at height mm (in)
Standard
Outer
Intake 604.1 (61.6, 135.8) at 37.6 (1.480)
Exhaust 640.4 (65.3, 144.0) at 34.1 (1.343)
Inner
Intake 284.4 (29.0, 63.9) at 32.6 (1.283)
Exhaust 328.5 (33.5, 73.9) at 29.1 (1.146)
Limit
Outer
Intake 567.8 (57.9, 127.7) at 37.6 (1.480)
Exhaust 620.8 (63.3, 139.6) at 34.1 (1.343)
Inner
Intake 266.8 (27.2, 60.0) at 32.6 (1.283)
Exhaust 318.7 (32.5, 71.7) at 29.1 (1.146)

If it exceeds the limit, replace spring.

ROCKER SHAFT AND ROCKER ARM

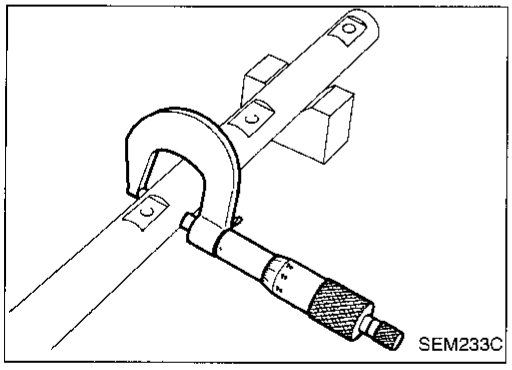

1. Check rocker shafts for scratches, seizure and wear.
2. Check outer diameter of rocker shaft.
   Diameter:
   21.979 - 22.000 mm (0.8653 - 0.8661 in)

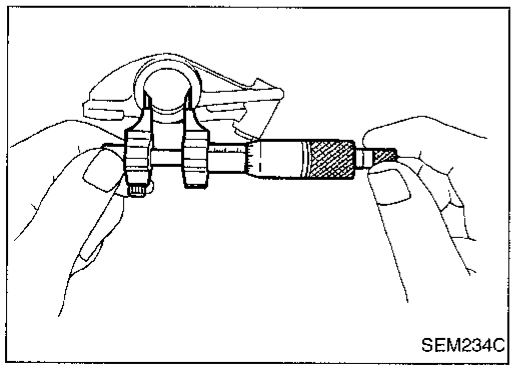

3. Check inner diameter of rocker arm.
   Diameter:
   22.012 - 22.029 mm (0.8666 - 0.8673 in)
   Rocker arm to shaft clearance:
   0.012 - 0.050 mm (0.0005 - 0.0020 in)

- **Keep rocker arm with hydraulic valve lifter standing to prevent air from entering hydraulic valve lifter when checking.**

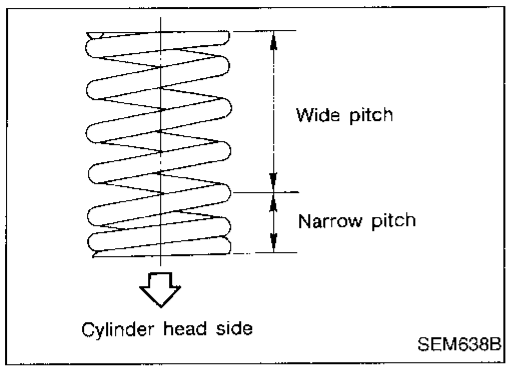

Assembly

1. Install valve component parts.

- **Always use new valve oil seal. Refer to OIL SEAL REPLACEMENT.**
- **Before installing valve oil seal, install inner valve spring seat.**
- **Install outer valve spring (uneven pitch type) with its narrow pitch side toward cylinder head side.**
- **After installing valve component parts, use plastic hammer to lightly tap valve stem tip to assure a proper fit.**

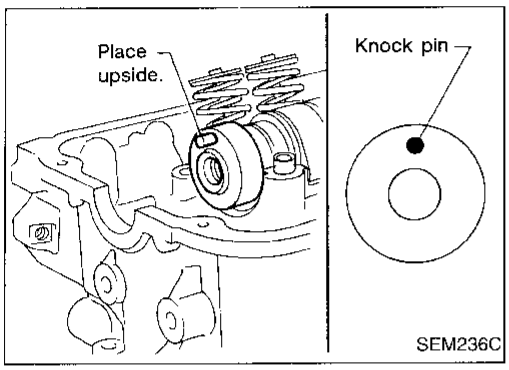

2. Install camshaft, placing knock pin towards front of engine and in the top position.

- **Apply engine oil to camshaft when mounting onto cylinder head.**

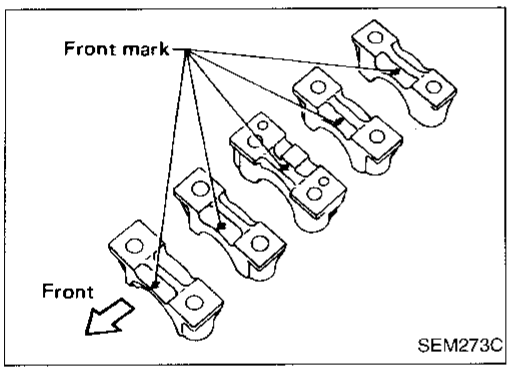

3. Install camshaft brackets.

- **Front mark is punched on the camshaft brackets.**

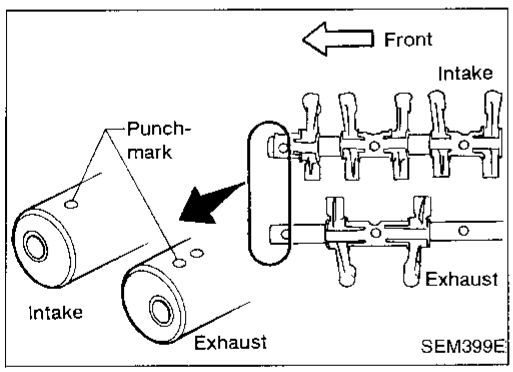

4. Install rocker shaft with rocker arms.

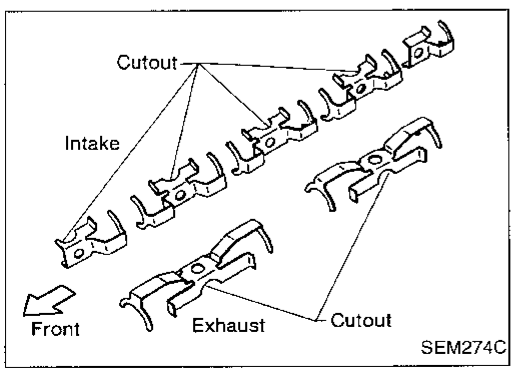

- Install retainer with cutout facing direction shown in figure at left.

Assembly (Cont'd)

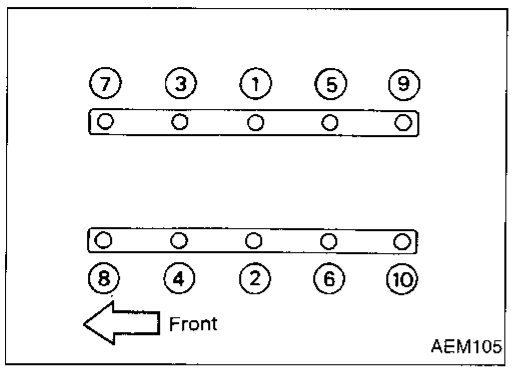

5. Tighten bolts as shown in figure at left.

Installation

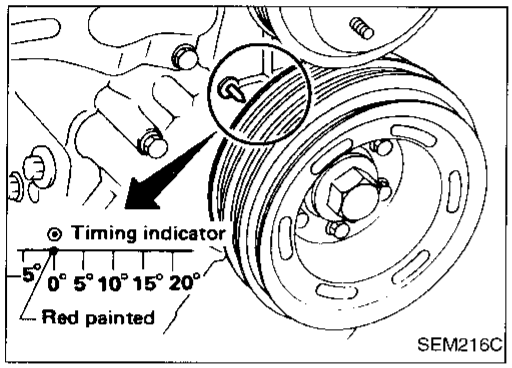

1. Set No. 1 piston at TDC on its compression stroke as follows:
a. Align mark on crankshaft pulley with "0°" position and confirm that distributor rotor head is set as shown in figure.

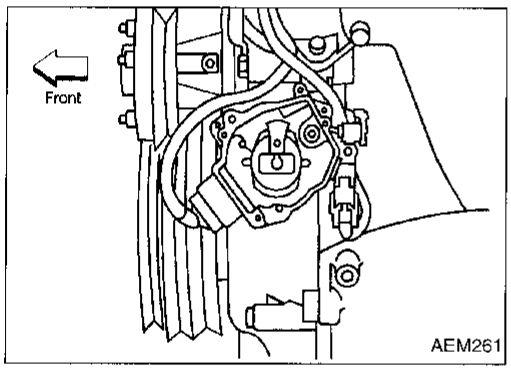

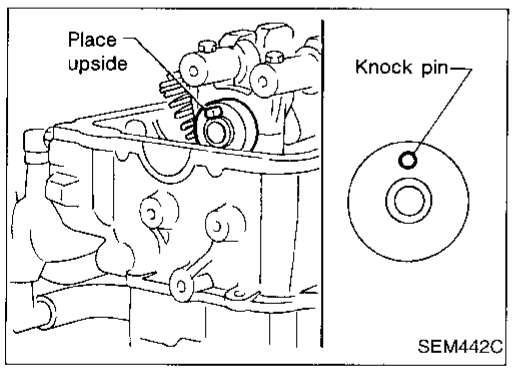

b. Confirm that knock pin on camshaft is set at the top.

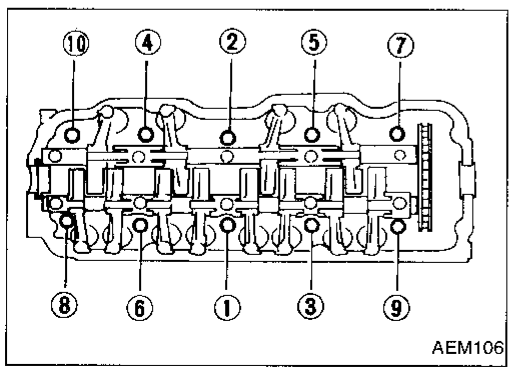

2. Install cylinder head with new gasket and tighten cylinder head bolts in numerical order.

- **Do not rotate crankshaft and camshaft separately, or valves will hit piston heads.**
- **Tightening procedure**

a. Tighten all bolts to 29 N·m (3.0 kg-m, 22 ft-lb).
b. Tighten all bolts to 78 N·m (8.0 kg-m, 58 ft-lb).
c. Loosen all bolts completely.
d. Tighten all bolts to 29 N·m (3.0 kg-m, 22 ft-lb).
e. Turn all bolts 80^{+5}_{-0} degrees clockwise with an angle wrench. If an angle wrench is not available, tighten all bolts to 74 to 83 N·m (7.5 to 8.5 kg-m, 54 to 61 ft-lb).

Installation (Cont'd)

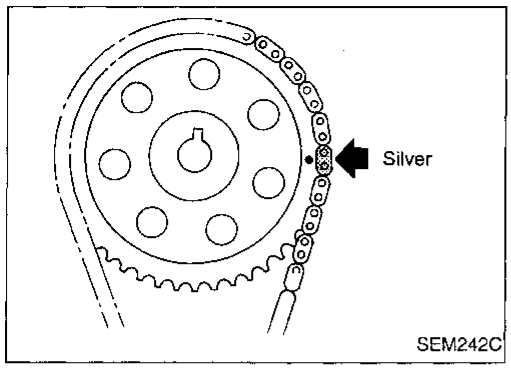

3. Set chain on camshaft sprocket by aligning each mating mark. Then install camshaft sprocket to camshaft.

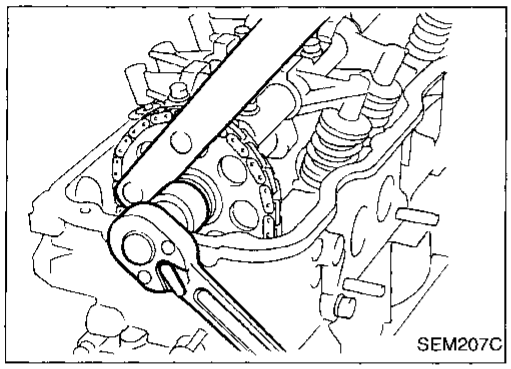

4. Tighten camshaft sprocket bolt.

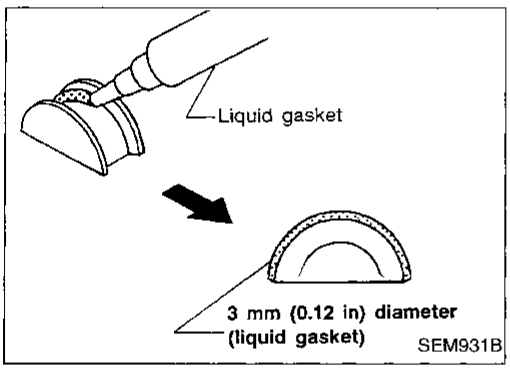

5. Install rubber plugs as follows:

a. Apply liquid gasket to rubber plugs.

- **Rubber plugs should be replaced with new ones.**
- **Rubber plugs should be installed within 5 minutes of applying liquid gasket.**

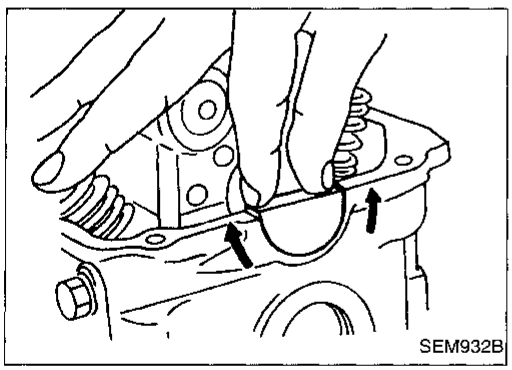

b. Install rubber plugs, then move them with your fingers to uniformly spread the gasket on cylinder head surface.

- **Rubber plugs should be installed flush with the surface.**
- **Do not start the engine for 30 minutes after installing rocker cover.**
- **Wipe away excessive liquid gasket from cylinder head top surface.**

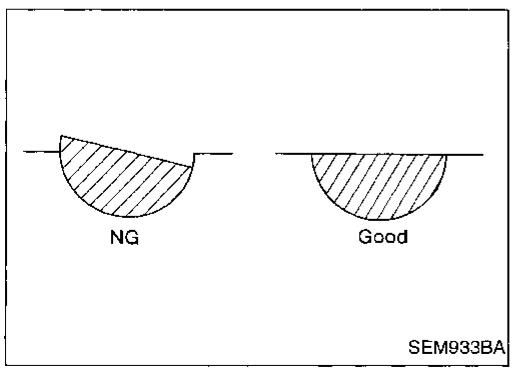

Installation (Cont'd)

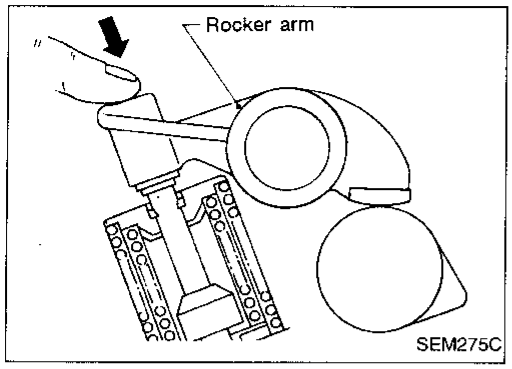

6. Check hydraulic valve lifter.
a. Push hydraulic valve lifter forcefully with your finger.
- **Be sure to check it with rocker arm in its free position.**

b. If valve lifter moves more than 1 mm (0.04 in), air may be inside of it.
c. Bleed air off by running engine at 1,000 rpm under no load for about 20 minutes.
d. If hydraulic valve lifters are still noisy, replace them and bleed air off again in the same manner as in step c.

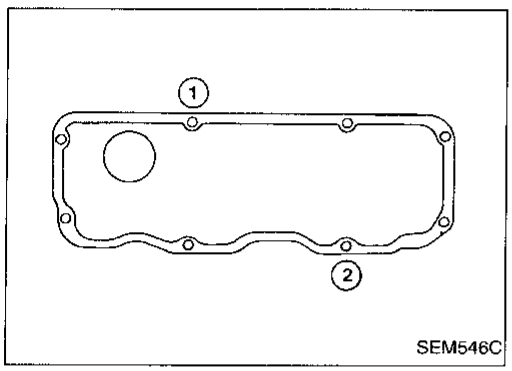

7. Install rocker cover.
- **Be sure to avoid interference between rocker cover and rocker arm.**

8. Tighten bolts as follows:
a. Tighten two bolts to 3 N·m (0.3 kg-m, 26 in-lb) temporarily in order shown in figure.

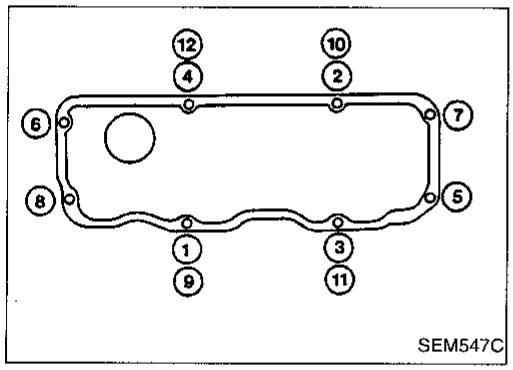

b. Then tighten bolts to 7 to 11 N·m (0.7 to 1.1 kg-m, 61 to 95 in-lb) in order shown in figure.
9. Install any parts removed.

SEC. 112

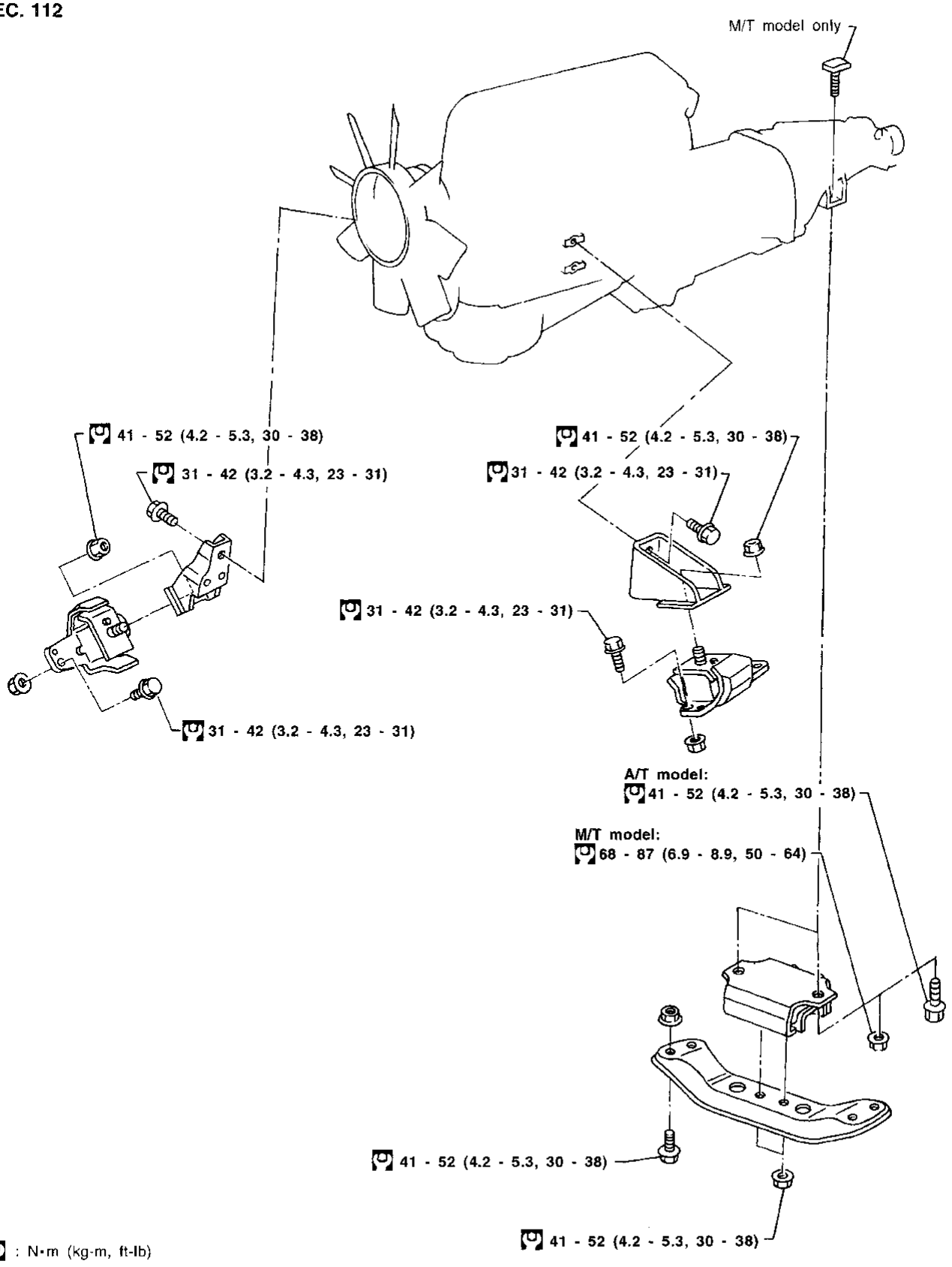

: N•m (kg-m, ft-lb)

MEM195A

WARNING:

- **Position vehicle on a flat and solid surface.**
- **Place chocks at front and back of rear wheels.**
- **Do not remove engine until exhaust system has completely cooled off.**
  Otherwise, you may burn yourself and/or fire may break out in fuel line.
- **Before disconnecting fuel hose, release fuel pressure. Refer to EC section ("Fuel Pressure Release", "BASIC SERVICE PROCEDURE").**
- **Be sure to hoist engine and transmission in a safe manner.**
- **For engines not equipped with engine slingers, attach proper slingers and bolts described in PARTS CATALOG.**

CAUTION:

- **When lifting engine, be sure to clear surrounding parts. Take special care near accelerator wire casing, brake lines and brake master cylinder.**
- **In hoisting the engine, always use engine slingers in a safe manner.**
- **Before separating engine and transmission, remove the crankshaft position sensor (OBD) from the assembly.**
- **Always take extra care not to damage edge of crankshaft position sensor (OBD) or ring gear teeth.**

Removal

1. Drain coolant from engine block and radiator. Refer to MA section ("Changing Engine Coolant", "ENGINE MAINTENANCE").
2. Release fuel pressure. Refer to EC section ("Fuel Pressure Release", "BASIC SERVICE PROCEDURE").
3. Remove negative battery cable.
4. Remove hood. Refer to BT section.
5. Remove power steering drive belt, generator drive belt and A/C compressor drive belt
6. Remove radiator. Refer to LC section ("Radiator", "ENGINE COOLING SYSTEM").
7. Remove exhaust manifold heat shield.
8. Disconnect exhaust system from exhaust manifold.
9. Discharge refrigerant. Refer to HA section ("R-134a Service Procedure", "SERVICE PROCEDURES").
10. Disconnect refrigerant lines. Refer to HA section ("Refrigerant Lines", "SERVICE PROCEDURES").
11. Disconnect accelerator wire, vacuum hoses, electrical connectors, heater hoses and vacuum booster hose.

Removal (Cont'd)

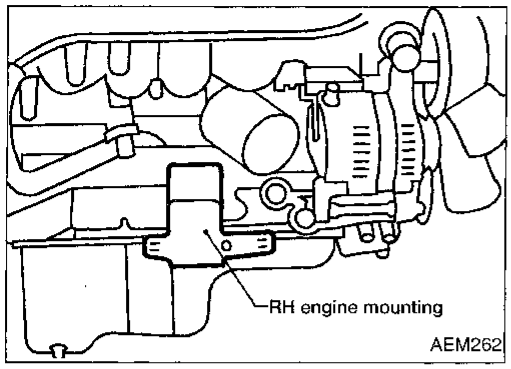

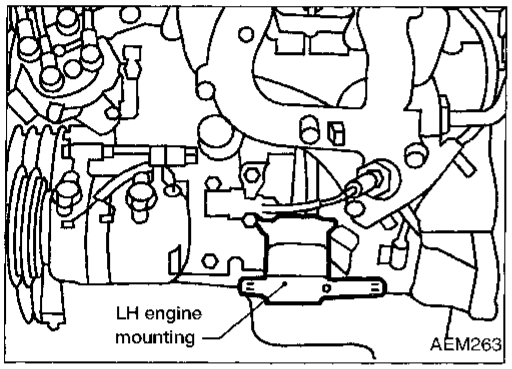

12. Remove four power steering pump bolts.
13. Disconnect A/T dipstick tube and A/T throttle wire. (A/T models only)
14. Remove transmission Refer to MT or AT section ("Removal", "REMOVAL AND INSTALLATION").
15. Remove LH and RH engine mounts.
16. Remove engine.

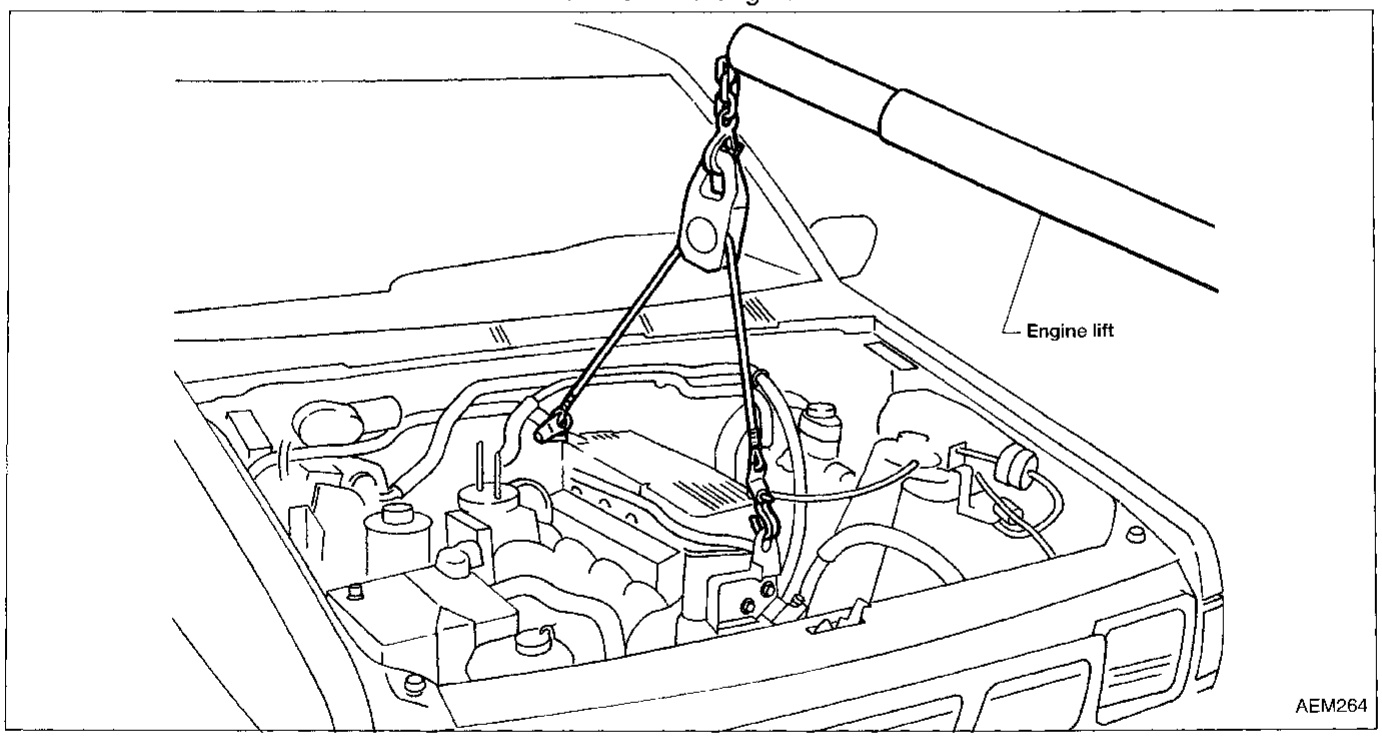

Installation

- Install in reverse order of removal.

SEC. 110•120•135•150•210

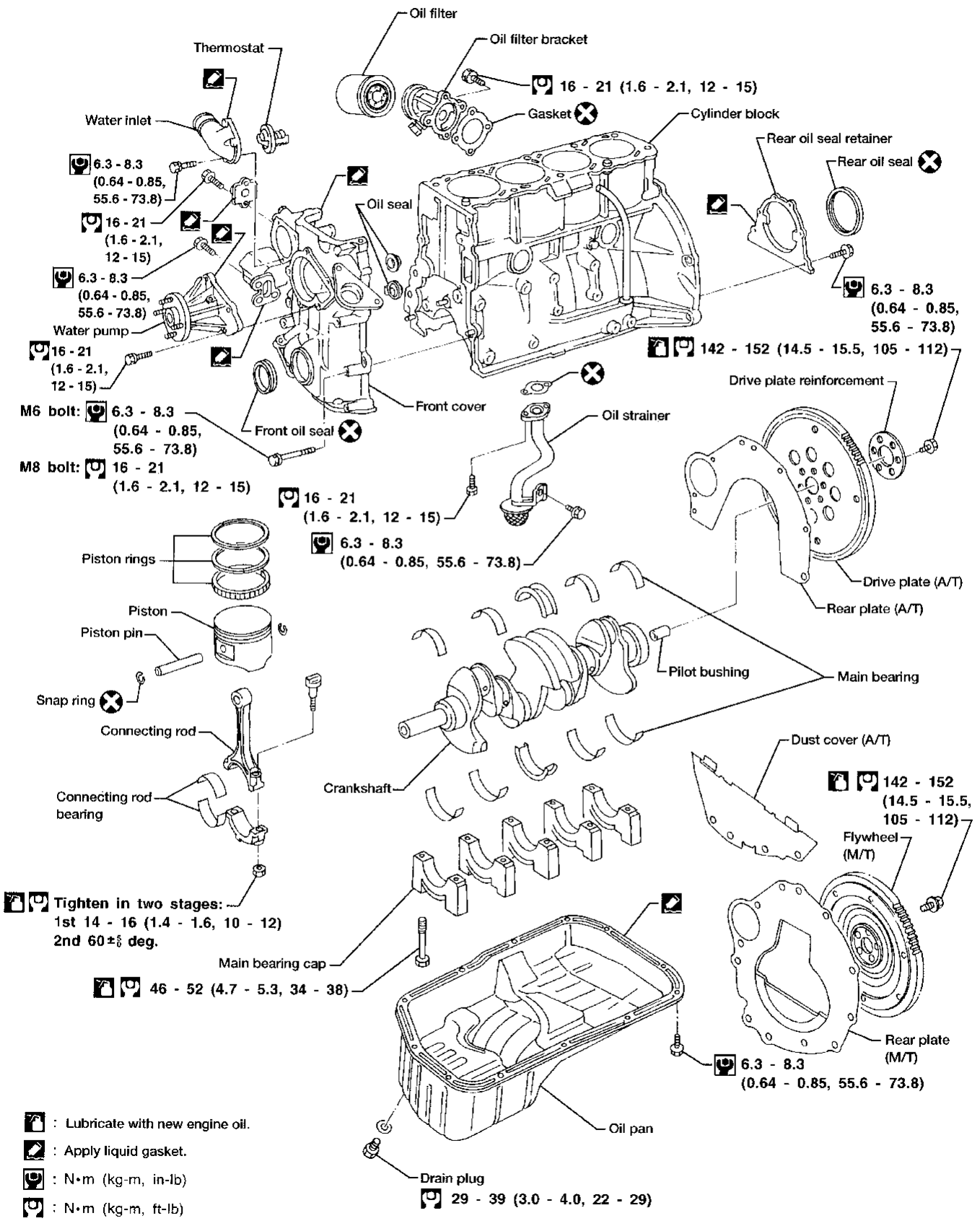

AEM256

CAUTION:
- **When installing sliding parts (bearings, pistons, etc.), lubricate contacting surfaces with new engine oil.**
- **Place removed parts such as bearings and bearing caps in their proper order and direction.**
- **When installing connecting rod nuts and main bearing cap bolts, apply new engine oil to threads and seating surfaces.**
- **Do not allow any magnetic materials to contact the ring gear teeth of flywheel or drive plate.**

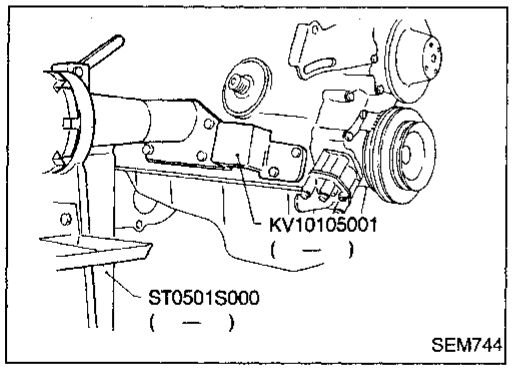

Disassembly

PISTON AND CRANKSHAFT

1. Place engine on a work stand.
2. Drain coolant and oil.
3. Remove oil pan.
4. Remove timing chain.
5. Remove water pump.
6. Remove cylinder head.
7. Remove pistons with connecting rod.

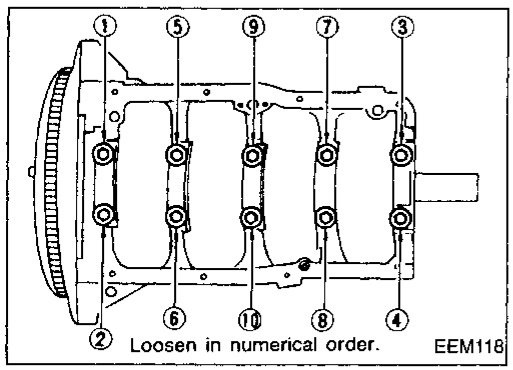

8. Remove bearing caps and crankshaft.
- **Before removing bearing caps, measure crankshaft end play. Refer to EM-40.**
- **Bolts should be loosened in two or three steps.**

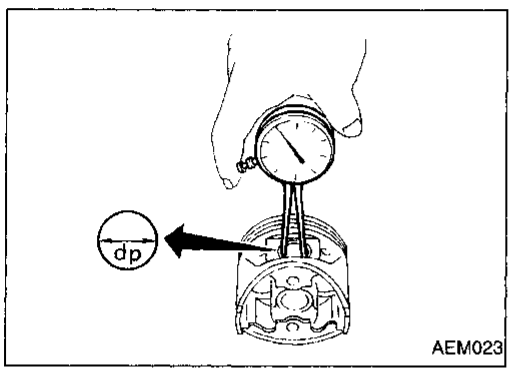

Inspection

PISTON AND PISTON PIN CLEARANCE

1. Measure inner diameter of piston pin hole "dp".
   Standard diameter "dp":
   21.002 - 21.008 mm (0.8268 - 0.8271 in)

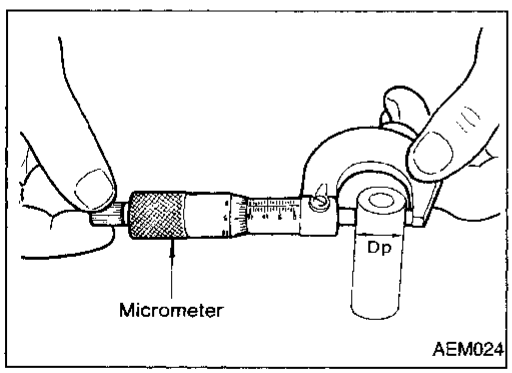

2. Measure outer diameter of piston pin "Dp".
   Standard diameter "Dp":
   20.994 - 20.996 mm (0.8265 - 0.8266 in)
3. Calculate piston pin clearance.
   dp – Dp = 0.008 - 0.012 mm (0.0003 - 0.0005 in)
   If it exceeds the above value, replace piston assembly with pin.

Inspection (Cont'd)

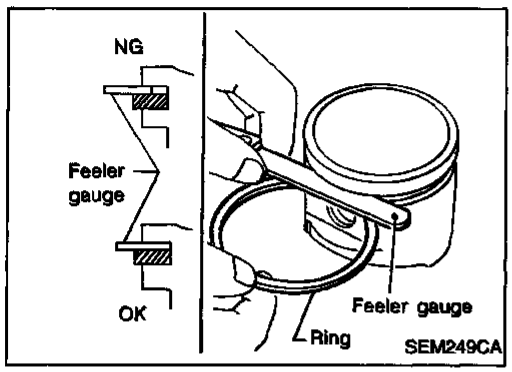

PISTON RING SIDE CLEARANCE

Side clearance:

Top ring 0.04 - 0.08 mm (0.0016 - 0.0031 in)
2nd ring 0.03 - 0.07 mm (0.0012 - 0.0028 in)
Oil ring 0.065 - 0.135 mm (0.0026 - 0.0053 in)

Max. limit of side clearance:

0.1 mm (0.004 in)

If out of specification, replace piston ring.
If clearance exceeds maximum limit with new ring, replace piston.

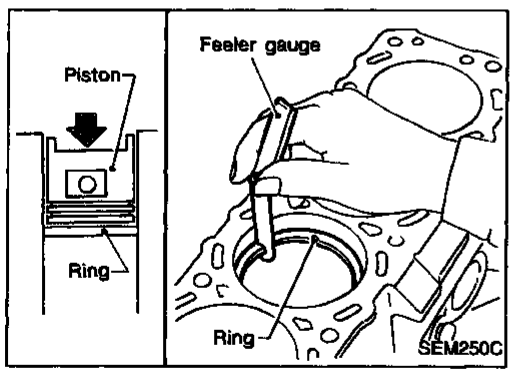

PISTON RING END GAP

End gap:

Top ring
0.28 - 0.52 mm (0.0110 - 0.0205 in)
2nd ring
0.45 - 0.69 mm (0.0177 - 0.0272 in)
(R or T is punched on the ring.)
0.55 - 0.70 mm (0.0217 - 0.0276 in)
(N is punched on the ring.)
Oil ring
0.20 - 0.69 mm (0.0079 - 0.0272 in)

Max. limit of ring gap:

0.5 mm (0.020 in)

If out of specification, replace piston ring. If gap exceeds maximum limit with a new ring, rebore cylinder and use oversized piston and piston rings. Refer to SDS, EM-46.

- When replacing the piston, check cylinder block surface for scratches or seizure. If scratches or seizure are found, hone or replace the cylinder block.

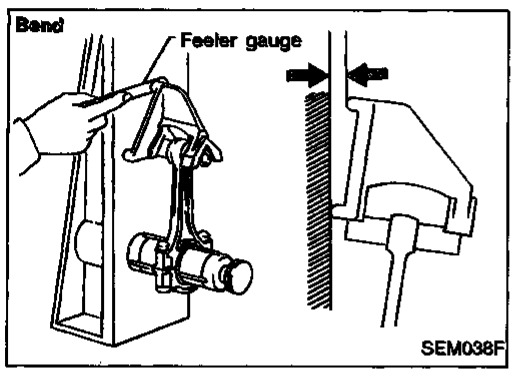

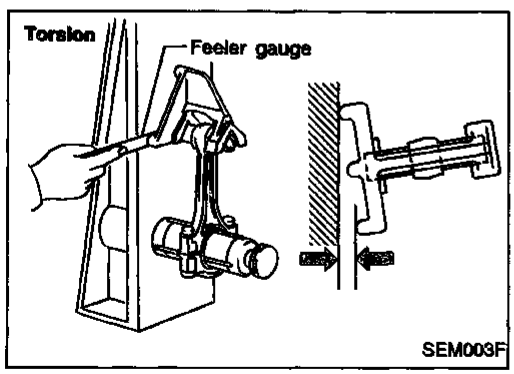

CONNECTING ROD BEND AND TORSION

Bend:

Limit 0.15 mm (0.0059 in)
per 100 mm (3.94 in) length

Torsion:

Limit 0.3 mm (0.012 in)
per 100 mm (3.94 in) length

If it exceeds the limit, replace connecting rod assembly.

Inspection (Cont'd)

CYLINDER BLOCK DISTORTION AND WEAR

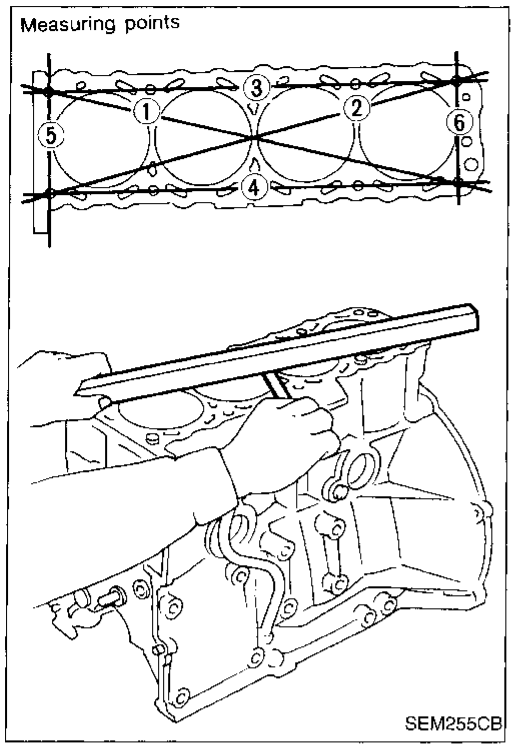

1. Clean upper face of cylinder block.
   Use a reliable straightedge and feeler gauge to check the flatness of cylinder block surface. Check along six positions shown in figure.
   Limit:
   0.1 mm (0.004 in)
2. If out of specification, resurface it.
   The limit for cylinder block resurfacing is determined by cylinder head resurfacing.

Amount of cylinder head resurfacing is "A"
Amount of cylinder block resurfacing is "B"
The maximum limit is as follows:
A + B = 0.2 mm (0.008 in)
Nominal cylinder block height from crankshaft center:
246.95 - 247.05 mm (9.7224 - 9.7264 in)

3. If necessary, replace cylinder block.

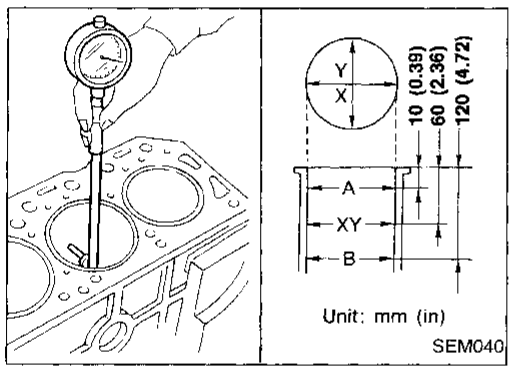

PISTON-TO-BORE CLEARANCE

1. Using a bore gauge, measure cylinder bore for wear, out-of-round and taper.
   Standard inner diameter:
   Refer to SDS, EM-42.
   Wear limit: 0.2 mm (0.008 in)
   Out-of-round (X – Y) standard: 0.015 mm (0.0006 in)
   Taper (A – B) standard: 0.015 mm (0.0006 in)
   If it exceeds the limit, rebore all cylinders. Replace cylinder block if necessary.
2. Check for scratches and seizure. If seizure is found, hone it.

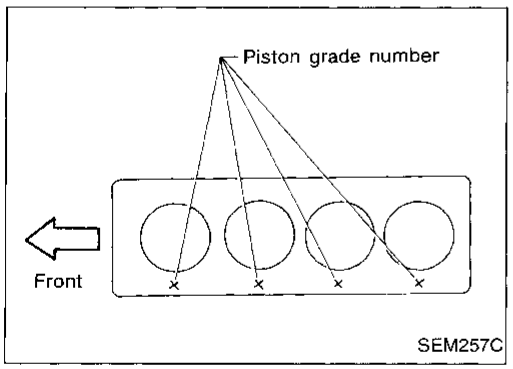

- **If cylinder block and piston are replaced, match piston grade with grade number on cylinder block upper surface.**

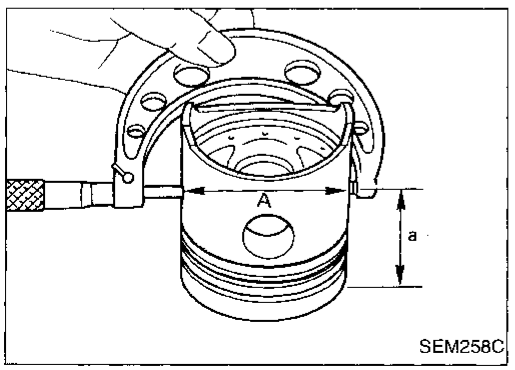

3. Measure piston skirt diameter.
   Piston diameter "A":
   Refer to SDS, EM-46.
   Measuring point "a" (Distance from the top):
   Approximately 52 mm (2.05 in)
4. Check that piston-to-bore clearance is within specification.
   Piston-to-bore clearance "B":
   0.020 - 0.040 mm (0.0008 - 0.0016 in)
5. Determine piston oversize according to amount of cylinder wear.

Oversize pistons are available for service. Refer to SDS, EM-46.

Inspection (Cont'd)

6. Cylinder bore size is determined by adding piston-to-bore clearance to piston diameter "A".
   Rebored size calculation:
   D = A + B – C
   where,
   D: Bored diameter
   A: Piston diameter as measured
   B: Piston-to-bore clearance
   C: Honing allowance 0.02 mm (0.0008 in)
7. Install main bearing caps and tighten bolts to the specified torque. This will prevent distortion of cylinder bores.
8. Cut cylinder bores.

- **When any cylinder needs boring, all other cylinders must also be bored.**
- **Do not cut too much out of cylinder bore at a time. Cut only 0.05 mm (0.0020 in) or so at a time.**

9. Hone cylinders to obtain specified piston-to-bore clearance.
10. Measure finished cylinder bore for out-of-round and taper.

- **Measurement should be done after cylinder bore cools down.**

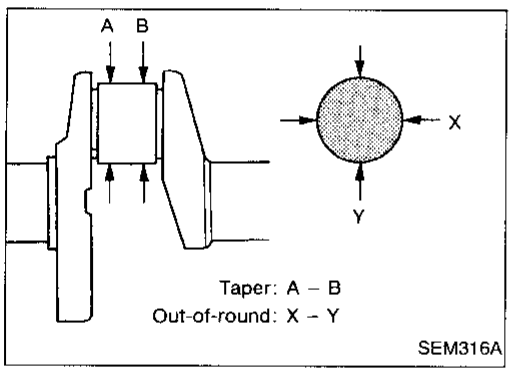

CRANKSHAFT

1. Check crankshaft main and pin journals for score, wear or cracks.
2. With a micrometer, measure journals for taper and out-of-round.
   Out-of-round (X – Y):
   Main journal Less than 0.01 mm (0.0004 in)
   Crank pin Less than 0.005 mm (0.0002 in)
   Taper (A – B):
   Main journal Less than 0.01 mm (0.0004 in)
   Crank pin Less than 0.005 mm (0.0002 in)

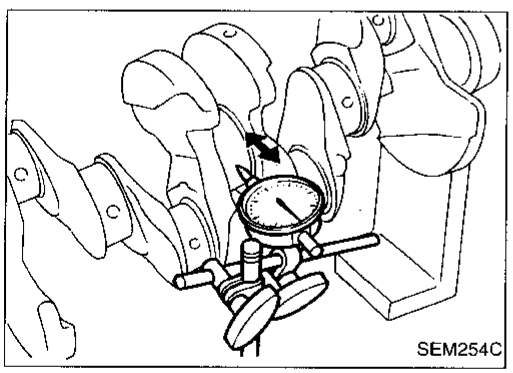

3. Measure crankshaft runout.
   Runout (Total indicator reading):
   Less than 0.10 mm (0.0039 in)

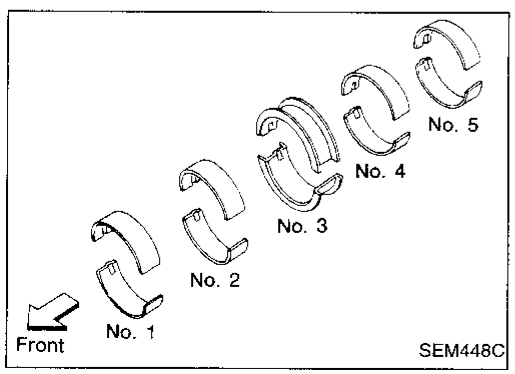

BEARING CLEARANCE

- Use Method A or Method B. Method A is preferred because it is more accurate.

Method A (Using bore gauge and micrometer)

Main bearing

1. Set main bearings in their proper positions on cylinder block and main bearing cap.

Inspection (Cont'd)

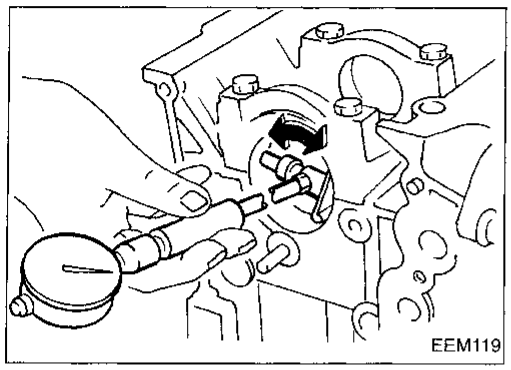

2. Install main bearing cap to cylinder block.
- **Tighten all bolts in correct order in two or three stages.**
3. Measure inner diameter "A" of each main bearing.

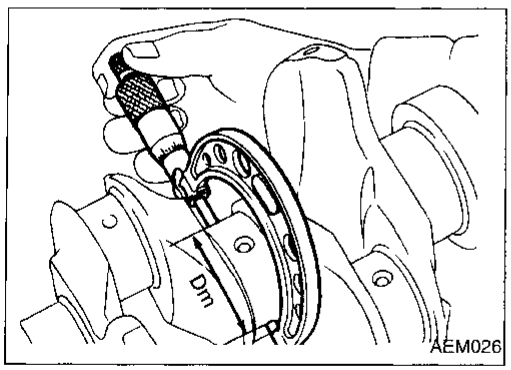

4. Measure outer diameter "Dm" of each crankshaft main journal.
5. Calculate main bearing clearance.
   Main bearing clearance = A – Dm
   Standard:
   0.020 - 0.047 mm (0.0008 - 0.0019 in)
   Limit:
   0.1 mm (0.004 in)
6. If it exceeds the limit, replace bearing.
7. If clearance cannot be adjusted within the standard of any bearing, grind crankshaft journal and use undersized bearing.

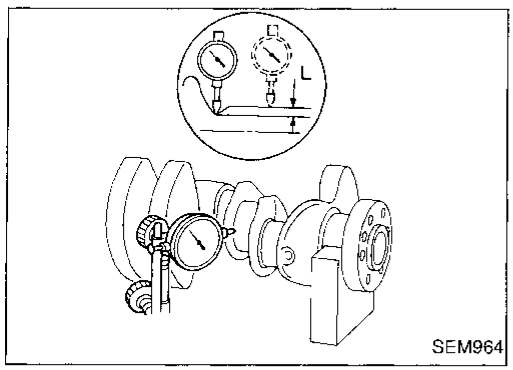

a. **When grinding crankshaft journal, confirm that "L" dimension in fillet roll is more than the specified limit.**
   "L": 0.1 mm (0.004 in)
b. **Refer to SDS for grinding crankshaft and available service parts.**

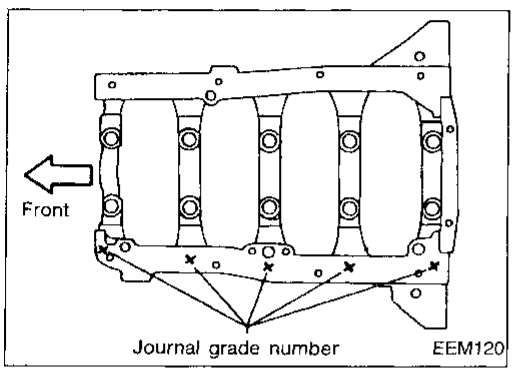

8. If crankshaft is reused, measure main bearing clearance and select thickness of main bearing.
   If crankshaft or cylinder block is replaced, select thickness of main bearings as follows:
a. Grade number of each cylinder block main journal is punched on the respective cylinder block. These numbers are punched in either Arabic or Roman numerals.

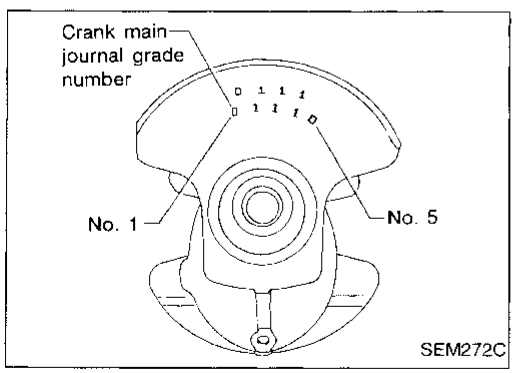

b. Grade number of each crankshaft main journal is punched on crankshaft. These numbers are punched in either Arabic or Roman numerals.
c. Select main bearing with suitable thickness according to the following example or table.
   For example:
   Main journal grade number: 1
   Crankshaft journal grade number: 2
   Main bearing grade number = 1 + 2
   = 3 (Yellow)

Inspection (Cont'd)

Main bearing grade number and identification color:

		Main journal grade number		
		0	1	2
Crankshaft journal grade number	0	0 (Black)	1 (Brown)	2 (Green)
	1 or I	1 (Brown)	2 (Green)	3 (Yellow)
	2 or II	2 (Green)	3 (Yellow)	4 (Blue)

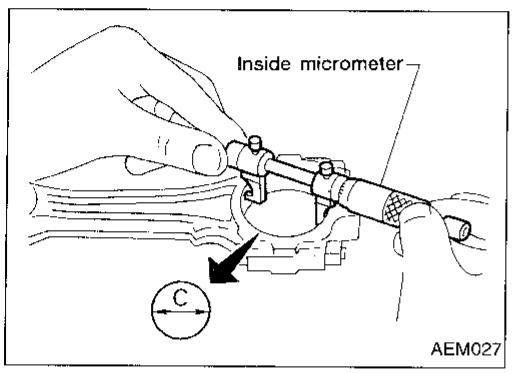

Connecting rod bearing (Big end)

1. Install connecting rod bearing to connecting rod and cap.
2. Install connecting rod cap to connecting rod.
- **Tighten bolts to the specified torque.**
3. Measure inner diameter "C" of each bearing.

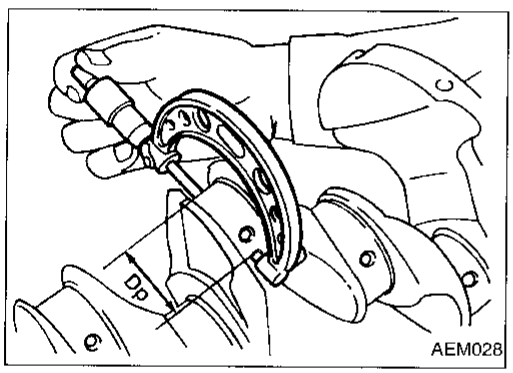

4. Measure outer diameter "Dp" of each crankshaft pin journal.
5. Calculate connecting rod bearing clearance.
   Connecting rod bearing clearance = C – Dp:
   Standard
   0.010 - 0.035 mm (0.0004 - 0.0014 in)
   Limit
   0.09 mm (0.0035 in)
6. If it exceeds the limit, replace bearing.
7. If clearance cannot be adjusted within the standard of any bearing, grind crankshaft journal and use undersized bearing. Refer to step 7 of "BEARING CLEARANCE — Main bearing".

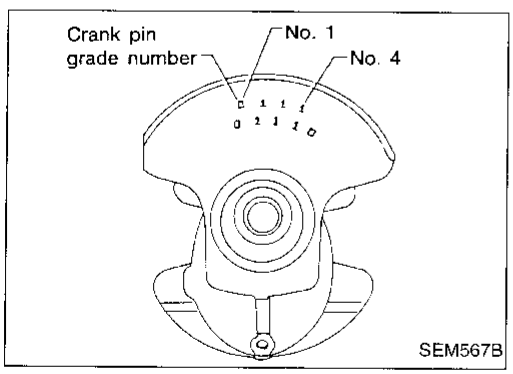

8. If crankshaft is replaced, select connecting rod bearing according to the following table.

Connecting rod bearing grade number:

These numbers are punched in either Arabic or Roman numerals.

Crank pin grade number	Connecting rod bearing grade number
0	0
1 or I	1
2 or II	2

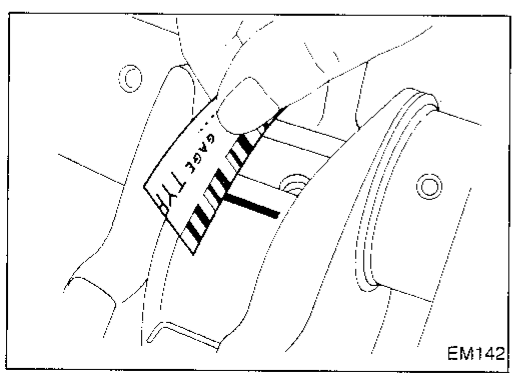

Method B (Using plastigage)

CAUTION:

- **Do not turn crankshaft or connecting rod while plastigage is being inserted.**
- **When bearing clearance exceeds the specified limit, ensure that the proper bearing has been installed. Then if excessive bearing clearance exists, use a thicker main bearing or undersized bearing so that the specified bearing clearance is obtained.**

Inspection (Cont'd)

CONNECTING ROD BUSHING CLEARANCE (Small end)

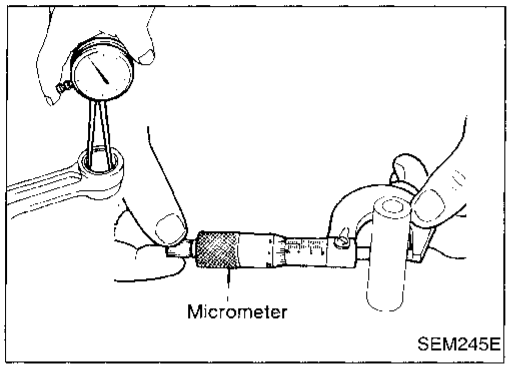

1. Measure inner diameter "C" of bushing.
2. Measure outer diameter "Dp" of piston pin.
3. Calculate connecting rod bushing clearance.

   C – Dp =

   –0.015 to –0.033 mm (–0.0006 to –0.0013 in) (Standard)

   If out of specification, replace connecting rod assembly and/or piston set with pin.

FLYWHEEL/DRIVE PLATE RUNOUT

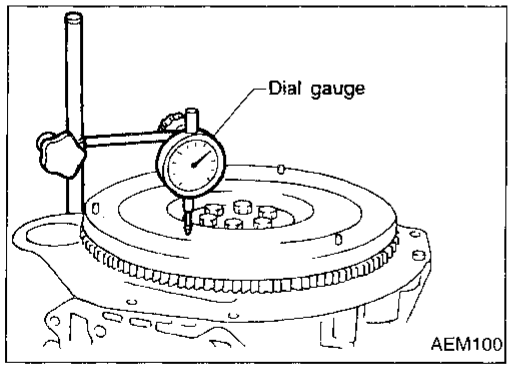

Runout (Total indicator reading):

Flywheel (M/T model)

Less than 0.1 mm (0.004 in)

Drive plate (A/T model)

Less than 0.1 mm (0.004 in)

CAUTION:

- **Be careful not to damage the ring gear teeth.**
- **Check the drive plate for deformation and cracks.**
- **Do not allow any magnetic materials to contact the ring gear teeth.**
- **Do not resurface the flywheel. Replace as necessary.**

Assembly

PISTON

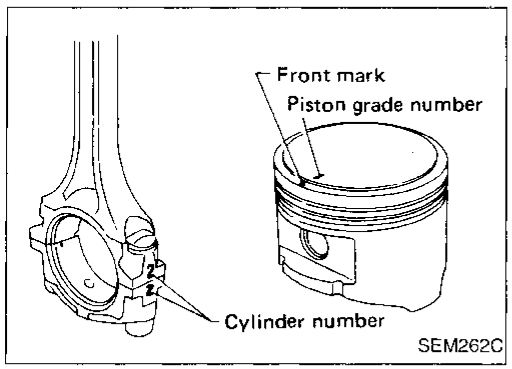

1. Heat piston to 60 to 70°C (140 to 158°F) and assemble piston, piston pin and connecting rod.

- **Align the direction of piston and connecting rod.**
- **Numbers stamped on connecting rod and cap correspond to each cylinder.**
- **After assembly, make sure connecting rod swings smoothly.**

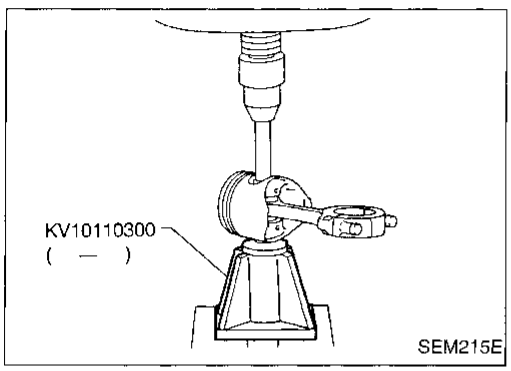

2. Set piston rings as shown.

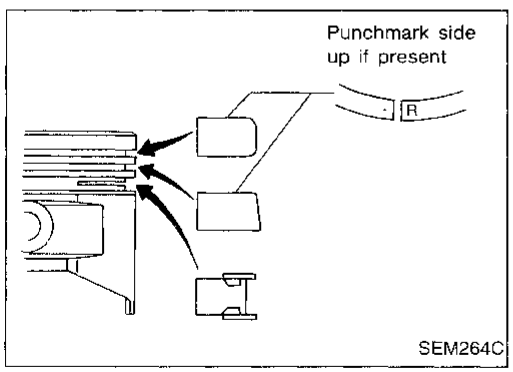

CAUTION:

- **When piston rings are not replaced, make sure that piston rings are mounted in their original positions.**
- **When piston rings are being replaced and no punchmark is present, piston rings can be mounted with either side up.**

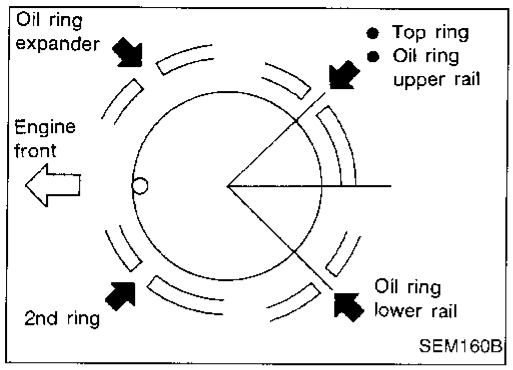

3. Align piston rings so that end gaps are positioned as shown.

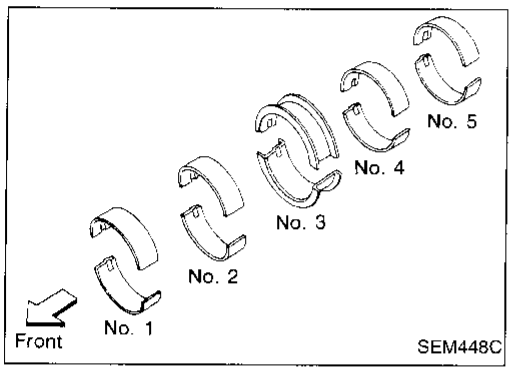

CRANKSHAFT

1. Set main bearings in their proper positions on cylinder block and main bearing beam.
- **Confirm that correct main bearings are used. Refer to EM-36.**
- **Apply new engine oil to bearing surfaces.**

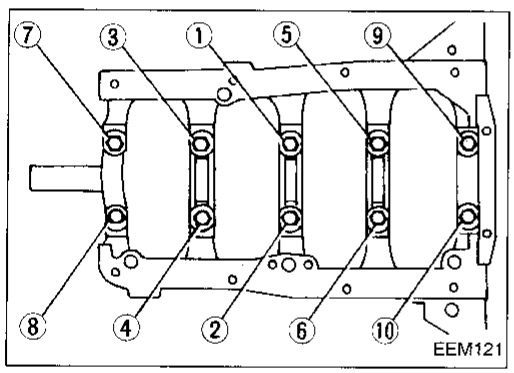

2. Install crankshaft and main bearing beam and tighten bolts to the specified torque.
- **Apply new engine oil to the bolt threads and seat surface.**
- **Prior to tightening bearing cap bolts, place bearing cap in its proper position by shifting crankshaft in the axial direction.**
- **Tighten bearing cap bolts gradually in two or three stages. Start with center bearing and move outward as shown in figure.**
- **After securing bearing cap bolts, make sure crankshaft turns smoothly by hand.**

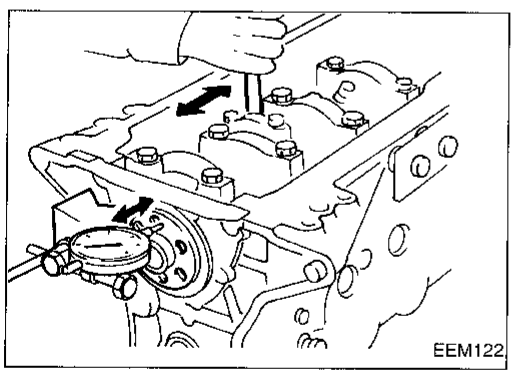

3. Measure crankshaft end play.
   Crankshaft end play:
   Standard
   0.05 - 0.18 mm (0.0020 - 0.0071 in)
   Limit
   0.3 mm (0.012 in)

If beyond the limit, replace bearing with a new one.

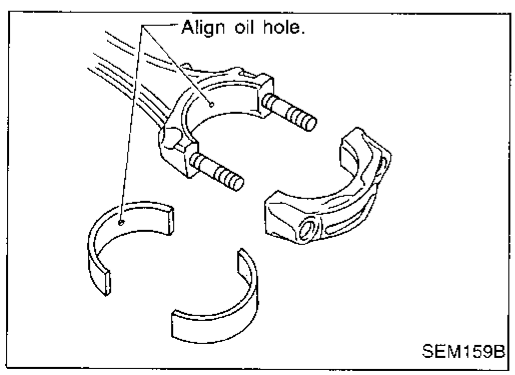

4. Install connecting rod bearings in connecting rods and connecting rod caps.
- **Confirm that correct bearings are used. Refer to EM-38.**
- **Install bearings so that oil hole in connecting rod aligns with oil hole of bearing.**
- **Apply new engine oil to bearing surfaces, bolt threads and seating surfaces.**

Assembly (Cont'd)

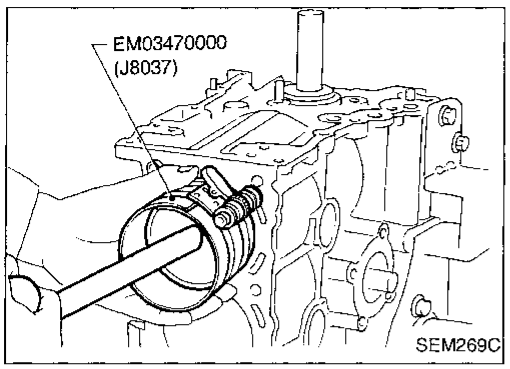

5. Install pistons with connecting rods.
a. Install them into corresponding cylinders with Tool.

- **Arrange so that front mark on piston head faces toward front of engine.**
- **Make sure connecting rod does not scratch cylinder wall.**
- **Make sure connecting rod bolts do not scratch crankshaft journals.**
- **Apply new engine oil to piston rings and sliding surface of piston.**

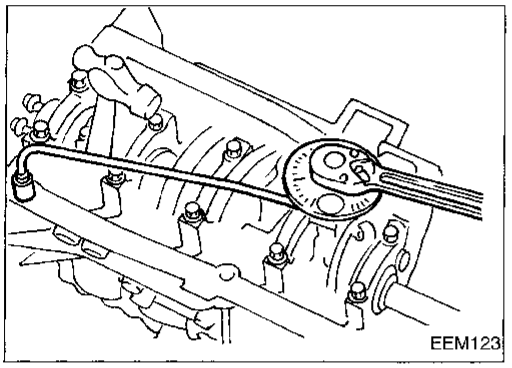

b. Install connecting rod bearing caps.
Tighten connecting rod bearing cap nuts using the following procedure.

Connecting rod bearing nut:
(1) Tighten to 14 to 16 N·m (1.4 to 1.6 kg-m, 10 to 12 ft-lb).
(2) Tighten bolts 60^{+5}_{-0} degrees clockwise with an angle wrench.
If an angle wrench is not available, tighten them to 38 to 44 N·m (3.9 to 4.5 kg-m, 28 to 33 ft-lb).

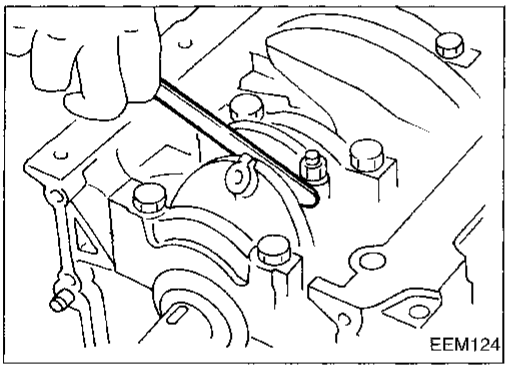

6. Measure connecting rod side clearance.

Connecting rod side clearance:
Standard
0.2 - 0.4 mm (0.008 - 0.016 in)
Limit
0.6 mm (0.024 in)

If beyond the limit, replace connecting rod and/or crankshaft.

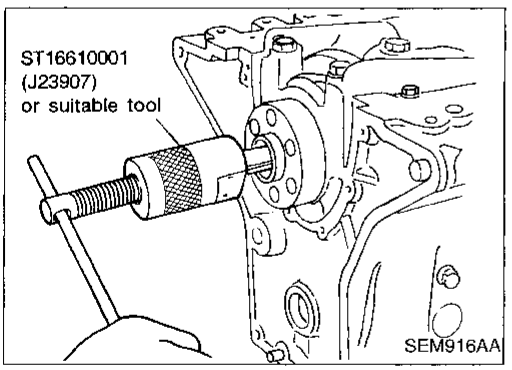

REPLACING PILOT BUSHING

1. Remove pilot bushing (M/T) or pilot convertor (A/T).

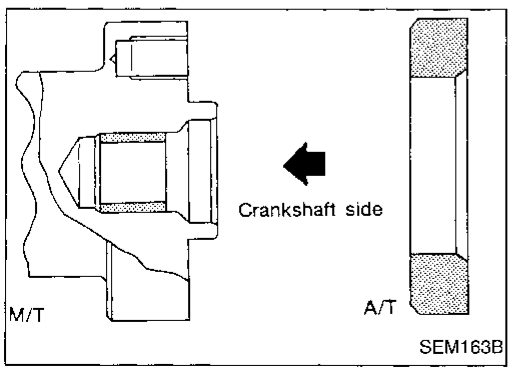

2. Install pilot bushing (M/T) or pilot convertor (A/T).

General Specifications

Cylinder arrangement		4, in-line
Displacement	cm^3 (cu in)	2,389 (145.78)
Bore x stroke	mm (in)	89 x 96 (3.50 x 3.78)
Valve arrangement		OHC
Firing order		1-3-4-2
Number of piston rings		
Compression		2
Oil		1
Number of main bearings		5
Compression ratio		8.6

Unit: kPa (kg/cm^2, psi)/rpm

Compression pressure	
Standard	1,324 (13.5, 192)/300
Minimum	981 (10, 142)/300
Differential limit between cylinders	98 (1.0, 14)/300

Inspection and Adjustment

CYLINDER BLOCK

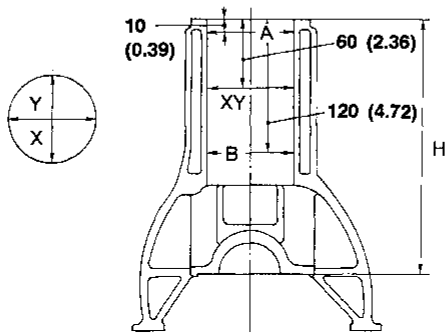

SEM400E

Unit: mm (in)

			Standard	Limit
Distortion			—	0.1 (0.004)
Cylinder bore	Inner diameter	Grade 1	89.000 - 89.010 (3.5039 - 3.5043)	0.2 (0.008)*
		Grade 2	89.010 - 89.020 (3.5043 - 3.5047)	
		Grade 3	89.020 - 89.030 (3.5047 - 3.5051)	
	Out-of-round (X – Y)		Less than 0.015 (0.0006)	—
	Taper (A – B)		Less than 0.015 (0.0006)	—
Difference in inner diameter between cylinders			Less than 0.05 (0.0020)	0.2 (0.008)
Piston-to-cylinder clearance			0.020 - 0.040 (0.0008 - 0.0016)	—
Cylinder block height (From crankshaft center)			246.95 - 247.05 (9.7224 - 9.7264)	0.2 (0.008)**

* Wear limit
** Total amount of cylinder head resurfacing and cylinder block resurfacing

CYLINDER HEAD

Unit: mm (in)

	Standard	Limit
Height (H)	98.8 - 99.0 (3.890 - 3.898)	0.2 (0.008)*
Surface distortion	0.03 (0.0012)	0.1 (0.004)

* Total amount of cylinder head resurfacing and cylinder block resurfacing

VALVE GUIDE

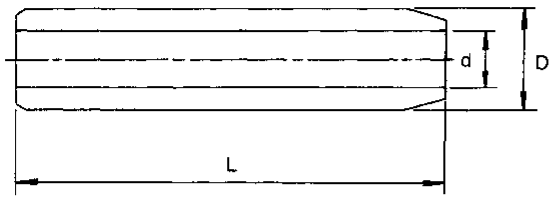

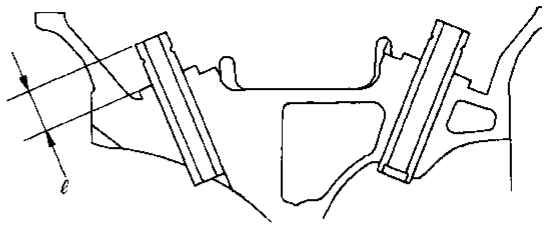

SEM401E

Unit: mm (in)

	Standard		Service		Limit
	Intake	Exhaust	Intake	Exhaust	—
Length (L)	52.6 (2.071)	56.0 (2.205)	52.6 (2.071)	56.0 (2.205)	—
Outer diameter (D)	11.023 - 11.034 (0.4340 - 0.4344)	12.023 - 12.034 (0.4733 - 0.4738)	11.223 - 11.234 (0.4418 - 0.4423)	12.223 - 12.234 (0.4812 - 0.4817)	—
Inner diameter (d) (Finished size)	7.000 - 7.018 (0.2756 - 0.2763)	8.000 - 8.018 (0.3150 - 0.3157)	7.000 - 7.018 (0.2756 - 0.2763)	8.000 - 8.018 (0.3150 - 0.3157)	—
Cylinder head hole diameter	10.975 - 10.996 (0.4321 - 0.4329)	11.975 - 11.996 (0.4715 - 0.4723)	11.175 - 11.196 (0.4400 - 0.4408)	12.175 - 12.196 (0.4793 - 0.4802)	—
Interference fit	0.027 - 0.059 (0.0011 - 0.0023)				—
Stem to guide clearance	0.020 - 0.053 (0.0008 - 0.0021)	0.040 - 0.070 (0.0016 - 0.0028)	0.020 - 0.053 (0.0008 - 0.0021)	0.040 - 0.070 (0.0016 - 0.0028)	0.1 (0.004)
Tapping length (ℓ)	14.9 - 15.1 (0.587 - 0.594)				

VALVE SEAT

Standard

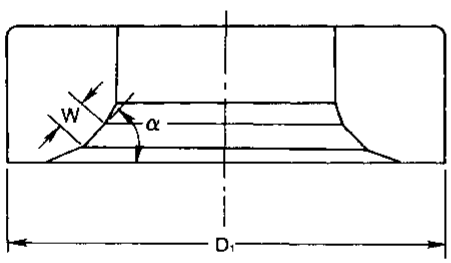

Service

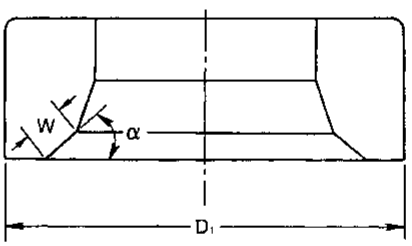

SEM402E

Unit: mm (in)

	Standard		Service	
	Intake	Exhaust	Intake	Exhaust
Cylinder head seat recess diameter	36.000 - 36.016 (1.4173 - 1.4179)	42.000 - 42.016 (1.6535 - 1.6542)	36.500 - 36.516 (1.4370 - 1.4376)	42.500 - 42.516 (1.6732 - 1.6739)
Valve seat outer diameter (D_1)	36.080 - 36.096 (1.4205 - 1.4211)	42.080 - 42.096 (1.6567 - 1.6573)	36.580 - 36.596 (1.4402 - 1.4408)	42.580 - 42.596 (1.6764 - 1.6770)
Face angle (α)	45°	45°	45°	45°
Contacting width (W)	1.6 - 1.7 (0.063 - 0.067)	1.7 - 2.1 (0.067 - 0.083)	1.6 - 1.7 (0.063 - 0.067)	1.7 - 2.1 (0.067 - 0.083)

VALVE

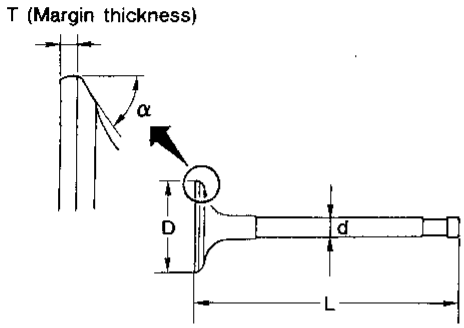

SEM188A

Unit: mm (in)

		Standard	Limit
Valve head diameter (D)	In.	33.95 - 34.25 (1.3366 - 1.3484)	—
	Ex.	40.0 - 40.2 (1.575 - 1.583)	—
Valve length (L)	In.	119.9 - 120.2 (4.720 - 4.732)	—
	Ex.	120.67 - 120.97 (4.7508 - 4.7626)	—
Valve stem diameter (d)	In.	6.965 - 6.980 (0.2742 - 0.2748)	—
	Ex.	7.948 - 7.960 (0.3129 - 0.3134)	—
Valve face angle (α)	In.	45°30′	—
	Ex.	45°30′	—
Valve head margin (T)	In.	1.15 - 1.45 (0.0453 - 0.0571)	0.5 (0.020)
	Ex.	1.35 - 1.65 (0.0531 - 0.0650)	
Valve clearance		0 (0)	

VALVE SPRING

Unit: mm (in)

		Standard		Limit	
		Intake	Exhaust	Intake	Exhaust
Free height (H)	Outer	57.44 (2.2614)	53.21 (2.0949)	—	—
	Inner	53.34 (2.1000)	47.95 (1.8878)	—	—
Pressure N (kg, lb) at height	Outer	604.1 (61.6, 135.8) at 37.6 (1.480)	640.4 (65.3, 144.0) at 34.1 (1.343)	567.8 (57.9, 127.7) at 37.6 (1.480)	620.8 (63.3, 139.6) at 34.1 (1.343)
	Inner	284.4 (29.0, 63.9) at 32.6 (1.283)	328.5 (33.5, 73.9) at 29.1 (1.146)	266.8 (27.2, 60.0) at 32.6 (1.283)	318.7 (32.5, 71.7) at 29.1 (1.146)
Out-of-square	Outer	—	—	2.5 (0.098)	2.3 (0.091)
	Inner	—	—	2.3 (0.091)	2.1 (0.083)

CAMSHAFT AND CAMSHAFT BEARING

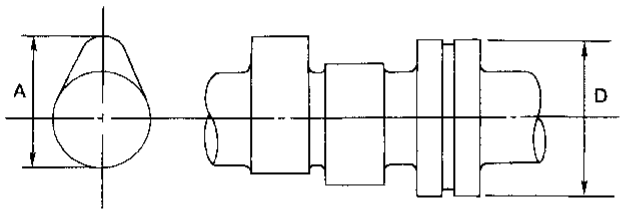

SEM568A

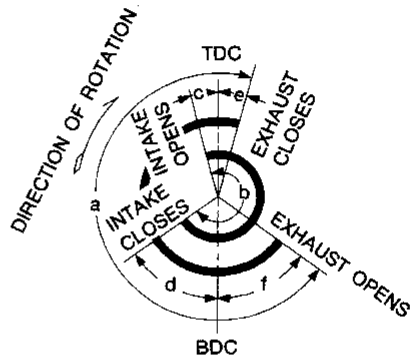

EM120

Unit: mm (in)

		Standard	Limit
Cam height (A)		44.43 - 44.58 (1.7492 - 1.7551)	—
Valve lift (h)		9.7 (0.382)	—
Wear limit of cam height		—	0.2 (0.008)
Camshaft journal to bearing clearance		0.045 - 0.090 (0.0018 - 0.0035)	0.12 (0.0047)
Inner diameter of camshaft bearing		33.000 - 33.025 (1.2992 - 1.3002)	—
Outer diameter of camshaft journal (D)		32.935 - 32.955 (1.2967 - 1.2974)	—
Camshaft runout		0 - 0.02 (0 - 0.0008)	—
Camshaft end play		0.07 - 0.15 (0.0028 - 0.0059)	0.2 (0.008)
Valve timing (Degree on crankshaft)	a	232	—
	b	232	—
	c	–5	—
	d	57	—
	e	11	—
	f	41	—

ROCKER ARM AND ROCKER SHAFT

Unit: mm (in)

Rocker arm to shaft clearance	0.012 - 0.050 (0.0005 - 0.0020)
Rocker shaft diameter	21.979 - 22.000 (0.8653 - 0.8661)
Rocker arm rocker shaft hole diameter	22.012 - 22.029 (0.8666 - 0.8673)

PISTON, PISTON RING AND PISTON PIN

Piston

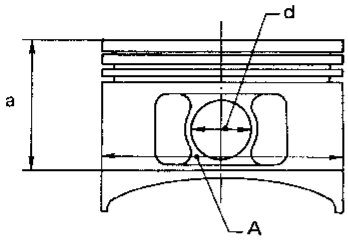

SEM444C

Unit: mm (in)

Piston skirt diameter (A)	Standard	Grade No. 1	88.970 - 88.980 (3.5027 - 3.5031)
		Grade No. 2	88.980 - 88.990 (3.5031 - 3.5035)
		Grade No. 3	88.990 - 89.000 (3.5035 - 3.5039)
	Service (Oversize)	0.5 (0.020)	89.470 - 89.500 (3.5224 - 3.5236)
		1.0 (0.039)	89.970 - 90.000 (3.5421 - 3.5433)
Dimension (a)		Approximately 52 (2.05)	
Piston pin hole diameter (d)		21.002 - 21.008 (0.8268 - 0.8271)	
Piston-to-cylinder bore clearance		0.020 - 0.040 (0.0008 - 0.0016)	

Piston pin

Unit: mm (in)

	Standard
Piston pin outer diameter	20.994 - 20.996 (0.8265 - 0.8266)
Pin to piston pin hole clearance	0.008 - 0.012 (0.0003 - 0.0005)
Piston pin to connecting rod clearance	−0.015 to −0.033 (−0.0006 to −0.0013)

Piston ring

Unit: mm (in)

		Standard	Limit
Side clearance	Top	0.040 - 0.080 (0.0016 - 0.0031)	0.1 (0.004)
	2nd	0.030 - 0.070 (0.0012 - 0.0028)	0.1 (0.004)
	Oil	0.065 - 0.135 (0.0026 - 0.0053)*	0.1 (0.004)
Ring gap	Top	0.28 - 0.52 (0.0110 - 0.0205)	0.5 (0.020)
	2nd	0.45 - 0.69 (0.0177 - 0.0272)	0.5 (0.020)
	Oil (rail ring)	0.20 - 0.69 (0.0079 - 0.0272)	0.5 (0.020)

*: Riken-make

CONNECTING ROD

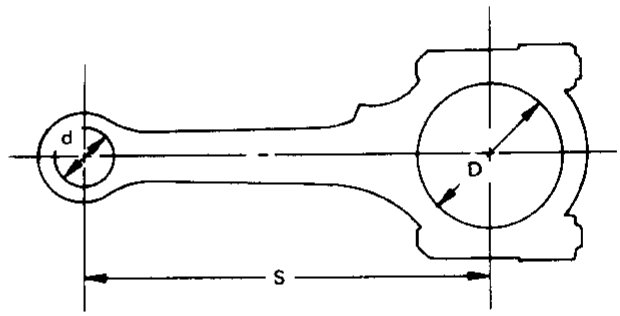

SEM216E

Unit: mm (in)

	Standard	Limit
Center distance (S)	164.95 - 165.05 (6.4941 - 6.4980)	—
Bend [per 100 mm (3.94 in)]	—	0.15 (0.0059)
Torsion [per 100 mm (3.94 in)]	—	0.3 (0.012)
Small end inner diameter (d)	20.948 - 20.978 (0.8247 - 0.8259)	—
Connecting rod big end inner diameter (D)	53.000 - 53.013 (2.0866 - 2.0871)	—
Side clearance	0.2 - 0.4 (0.008 - 0.016)	0.6 (0.024)

CRANKSHAFT

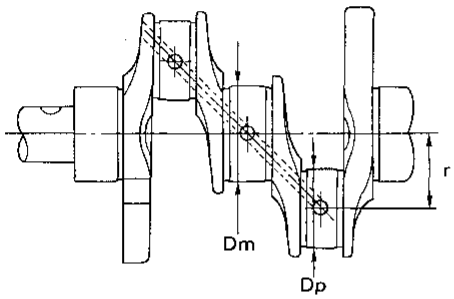

SEM394

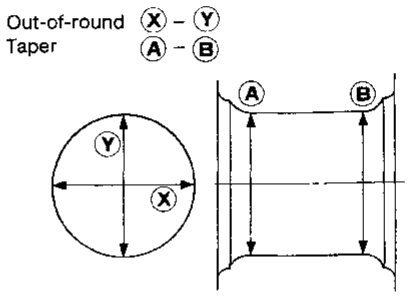

EM715

Unit: mm (in)

Main journal diameter (Dm)	Grade	No. 0	59.967 - 59.975 (2.3609 - 2.3612)
		No. 1	59.959 - 59.967 (2.3606 - 2.3609)
		No. 2	59.951 - 59.959 (2.3603 - 2.3606)
Pin journal diameter (Dp)	Grade	No. 0	49.968 - 49.974 (1.9672 - 1.9675)
		No. 1	49.962 - 49.968 (1.9670 - 1.9672)
		No. 2	49.956 - 49.962 (1.9668 - 1.9670)
Center distance (r)			47.95 - 48.05 (1.8878 - 1.8917)

		Standard	Limit
Taper of journal and pin [Ⓐ – Ⓑ]	Journal	—	0.01 (0.0004)
	Pin	—	0.005 (0.0002)
Out-of-round of journal and pin [Ⓧ – Ⓨ]	Journal	—	0.01 (0.0004)
	Pin	—	0.005 (0.0002)
Runout [TIR]*		—	0.10 (0.0039)
Free end play		0.05 - 0.18 (0.0020 - 0.0071)	0.3 (0.012)
Fillet roil		More than 0.1 (0.004)	

* Total indicator reading

BEARING CLEARANCE

Unit: mm (in)

	Standard	Limit
Main bearing clearance	0.020 - 0.047 (0.0008 - 0.0019)	0.1 (0.004)
Connecting rod bearing clearance	0.010 - 0.035 (0.0004 - 0.0014)	0.09 (0.0035)

Inspection and Adjustment (Cont'd)

AVAILABLE MAIN BEARING

Standard

Grade number	Thickness mm (in)	Identification color
0	1.821 - 1.825 (0.0717 - 0.0719)	Black
1	1.825 - 1.829 (0.0719 - 0.0720)	Brown
2	1.829 - 1.833 (0.0720 - 0.0722)	Green
3	1.833 - 1.837 (0.0722 - 0.0723)	Yellow
4	1.837 - 1.841 (0.0723 - 0.0725)	Blue

Undersize (service)

Unit: mm (in)

	Thickness	Main journal diameter "Dm"
0.25 (0.0098)	1.952 - 1.960 (0.0769 - 0.0772)	Grind so that bearing clearance is the specified value.

AVAILABLE CONNECTING ROD BEARING

Standard

Grade number	Thickness mm (in)	Identification color
0	1.505 - 1.508 (0.0593 - 0.0594)	—
1	1.508 - 1.511 (0.0594 - 0.0595)	Brown
2	1.511 - 1.514 (0.0595 - 0.0596)	Green

Undersize (service)

Unit: mm (in)

	Thickness	Crank pin journal diameter "Dp"
0.08 (0.0031)	1.540 - 1.548 (0.0606 - 0.0609)	Grind so that bearing clearance is the specified value.
0.12 (0.0047)	1.560 - 1.568 (0.0614 - 0.0617)	
0.25 (0.0098)	1.625 - 1.633 (0.0640 - 0.0643)	

MISCELLANEOUS COMPONENTS

Unit: mm (in)

Camshaft sprocket runout	[TIR]*	Less than 0.12 (0.0047)
Flywheel runout	[TIR]*	Less than 0.1 (0.004)
Drive plate runout	[TIR]*	Less than 0.1 (0.004)

* Total indicator reading

SECTION GI

CONTENTS

PRECAUTIONS 2
Precautions for Supplemental Restraint System (SRS) "AIR BAG" 2
General Precautions 3
Precautions for Engine Oils 5
Precautions for Multiport Fuel Injection System or ECCS Engine 6
Precautions for Three Way Catalyst 6
Precautions for Fuel 6
Precautions for Air Conditioning 6
HOW TO USE THIS MANUAL 7
HOW TO READ WIRING DIAGRAMS 9
Sample/Wiring Diagram — EXAMPL — 9
Description 11
Connector Symbols 13
Switch Positions 14
Detectable Lines And Non-Detectable Lines 15
Multiple Switch 15
Foldout Page 16
Wiring Diagram Codes (Cell Codes) 17
HOW TO PERFORM EFFICIENT DIAGNOSIS FOR AN ELECTRICAL INCIDENT 18
Work Flow 18
Incident Simulation Tests 19
Circuit Inspection 23
Introduction 23
Testing For "Opens" In The Circuit 24
Testing For "Shorts" In The Circuit 25
Ground Inspection 26
Voltage Drop Tests 27
HOW TO FOLLOW FLOW CHART IN TROUBLE DIAGNOSES 30
CONSULT CHECKING SYSTEM 33
IDENTIFICATION INFORMATION 34
Model Variation 34
Identification Number 36
Dimensions 38
Wheels & Tires 38
LIFTING POINTS AND TOW TRUCK TOWING 39
Pantograph Jack 39
Screw Jack 39
Garage Jack and Safety Stand 40
2-pole Lift 41
Tow Truck Towing 42
Towing Point 43
TIGHTENING TORQUE OF STANDARD BOLTS 44
SAE J1930 TERMINOLOGY LIST 45

Observe the following precautions to ensure safe and proper servicing.

Precautions for Supplemental Restraint System (SRS) "AIR BAG"

The Supplemental Restraint System "Air Bag", used along with a seat belt, helps to reduce the risk or severity of injury to the driver in a frontal collision. The Supplemental Restraint System consists of an air bag module (located in the center of the steering wheel), a diagnosis sensor unit, warning lamp, wiring harness, a crash zone sensor (4WD models) and spiral cable. Information necessary to service the system safely is included in the **RS section** of this Service Manual.

WARNING:

- **To avoid rendering the SRS inoperative, which could increase the risk of personal injury or death in the event of a collision which would result in air bag inflation, all maintenance must be performed by an authorized NISSAN dealer.**
- **Improper maintenance, including incorrect removal and installation of the SRS, can lead to personal injury caused by unintentional activation of the system.**
- **Do not use electrical test equipment on any circuit related to the SRS unless instructed to in this Service Manual. SRS wiring harnesses are covered with yellow insulation either just before the harness connectors or for the complete harness, for easy identification.**

General Precautions

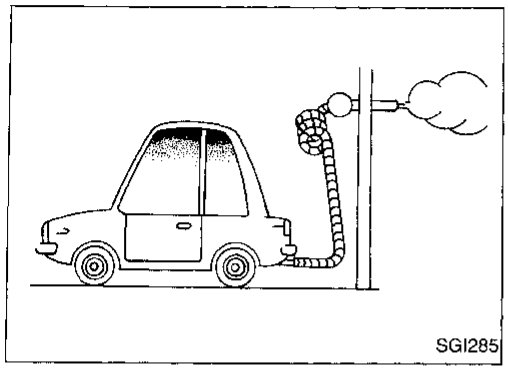
SGI285

- Do not operate the engine for an extended period of time without proper exhaust ventilation.
  Keep the work area well ventilated and free of any inflammable materials. Special care should be taken when handling any inflammable or poisonous materials, such as gasoline, refrigerant gas, etc. When working in a pit or other enclosed area, be sure to properly ventilate the area before working with hazardous materials.
  Do not smoke while working on the vehicle.

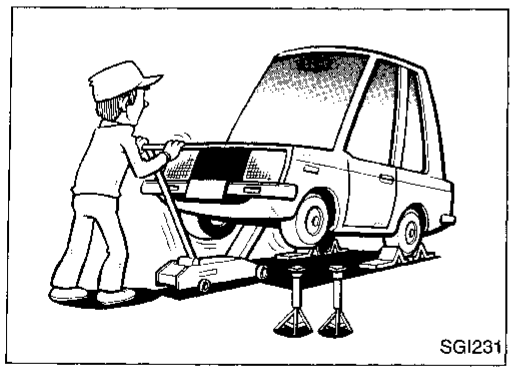
SGI231

- Before jacking up the vehicle, apply wheel chocks or other tire blocks to the wheels to prevent the vehicle from moving. After jacking up the vehicle, support the vehicle weight with safety stands at the points designated for proper lifting before working on the vehicle.
  These operations should be done on a level surface.
- When removing a heavy component such as the engine or transaxle/transmission, be careful not to lose your balance and drop them. Also, do not allow them to strike adjacent parts, especially the brake tubes and master cylinder.

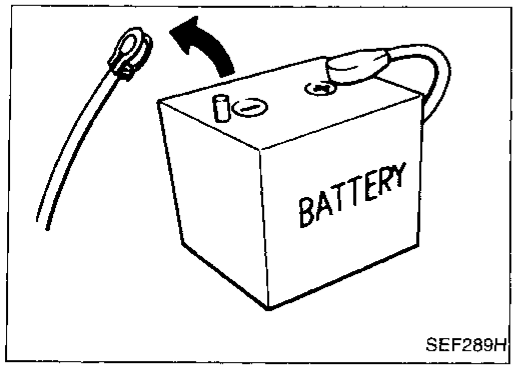

SEF289H

- Before starting repairs which do not require battery power:
  Turn off ignition switch.
  Disconnect the negative battery terminal.

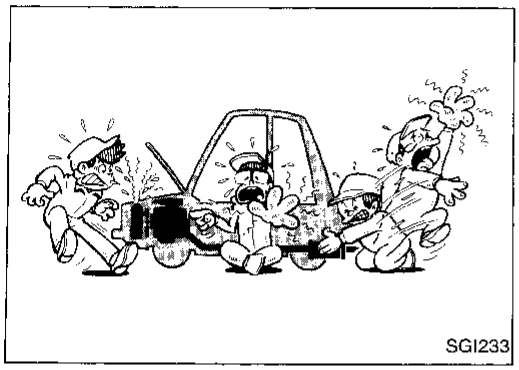
SGI233

- To prevent serious burns:
  Avoid contact with hot metal parts.
  Do not remove the radiator cap when the engine is hot.

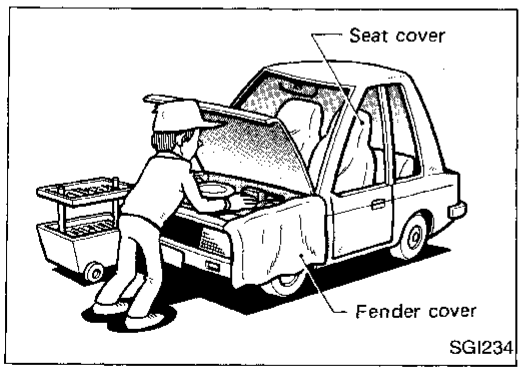

SGI234

- Before servicing the vehicle:
  Protect fenders, upholstery and carpeting with appropriate covers.
  Take caution that keys, buckles or buttons do not scratch paint.

General Precautions (Cont'd)

- Clean all disassembled parts in the designated liquid or solvent prior to inspection or assembly.
- Replace oil seals, gaskets, packings, O-rings, locking washers, cotter pins, self-locking nuts, etc. with new ones.
- Replace inner and outer races of tapered roller bearings and needle bearings as a set.
- Arrange the disassembled parts in accordance with their assembled locations and sequence.
- Do not touch the terminals of electrical components which use microcomputers (such as ECMs).
  Static electricity may damage internal electronic components.
- After disconnecting vacuum or air hoses, attach a tag to indicate the proper connection.
- Use only the fluids and lubricants specified in this manual.
- Use approved bonding agent, sealants or their equivalents when required.
- Use tools and recommended special tools where specified for safe and efficient service repairs.
- When repairing the fuel, oil, water, vacuum or exhaust systems, check all affected lines for leaks.
- Dispose of drained oil or the solvent used for cleaning parts in an appropriate manner.

WARNING:
To prevent ECM from storing the diagnostic trouble codes, do not carelessly disconnect the harness connectors which are related to the ECCS and A/T control system. The connectors should be disconnected only when working according to the WORK FLOW of TROUBLE DIAGNOSES in EC and AT sections.

Precautions for Engine Oils

Prolonged and repeated contact with used engine oil may cause skin cancer. Try to avoid direct skin contact with used oil.
If skin contact is made, wash thoroughly with soap or hand cleaner as soon as possible.

HEALTH PROTECTION PRECAUTIONS

- Avoid prolonged and repeated contact with oils, particularly used engine oils.
- Wear protective clothing, including impervious gloves where practicable.
- Do not put oily rags in pockets.
- Avoid contaminating clothes, particularly underclothing, with oil.
- Heavily soiled clothing and oil-impregnated footwear should not be worn. Overalls must be cleaned regularly.
- First Aid treatment should be obtained immediately for open cuts and wounds.
- Use barrier creams, applying them before each work period, to help the removal of oil from the skin.
- Wash with soap and water to ensure all oil is removed (skin cleansers and nail brushes will help). Preparations containing lanolin replace the natural skin oils which have been removed.
- Do not use gasoline, kerosene, diesel fuel, gas oil, thinners or solvents for cleaning skin.
- If skin disorders develop, obtain medical advice without delay.
- Where practicable, degrease components prior to handling.
- Where there is a risk of eye contact, eye protection should be worn, for example, chemical goggles or face shields; in addition, an eye wash facility should be provided.

ENVIRONMENTAL PROTECTION PRECAUTIONS

Burning used engine oil in small space heaters or boilers can be recommended only for units of approved design. The heating system must meet the requirements of HM Inspectorate of Pollution for small burners of less than 0.4 MW. If in doubt, check with the appropriate local authority and/or manufacturer of the approved appliance.
Dispose of used oil and used oil filters through authorized waste disposal contractors to licensed waste disposal sites, or to the waste oil reclamation trade. If in doubt, contact the local authority for advice on disposal facilities.
It is illegal to pour used oil on the ground, down sewers or drains, or into water courses.

The regulations concerning the pollution of the environment will vary between regions.

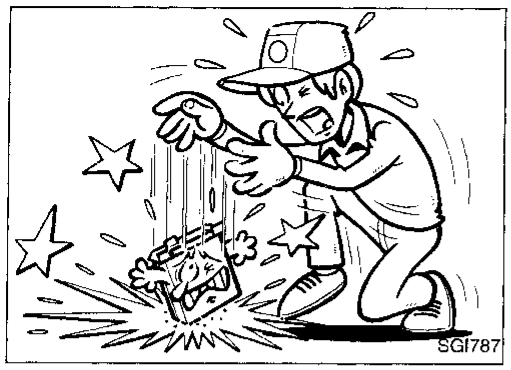

Precautions for Multiport Fuel Injection System or ECCS Engine

- Before connecting or disconnecting any harness connector for the multiport fuel injection system or ECM (ECCS control module):
  Turn ignition switch to OFF position.
  Disconnect negative battery terminal.
  Otherwise, there may be damage to ECM.
- Before disconnecting pressurized fuel line from fuel pump to injectors, be sure to release fuel pressure.
- Be careful not to jar components such as ECM and mass air flow sensor.

Precautions for Three Way Catalyst

If a large amount of unburned fuel flows into the catalyst, the catalyst temperature will be excessively high. To prevent this, follow the instructions below:

- Use unleaded gasoline only. Leaded gasoline will seriously damage the three way catalyst.
- When checking for ignition spark or measuring engine compression, make tests quickly and only when necessary.
- Do not run engine when the fuel tank level is low, otherwise the engine may misfire, causing damage to the catalyst.

Do not place the vehicle on inflammable material. Keep inflammable material off the exhaust pipe and the three way catalyst.

Precautions for Fuel

Use unleaded gasoline with an octane rating of at least 87 AKI (Anti-Knock Index) number (research octane number 91).

CAUTION:
Do not use leaded gasoline. Using leaded gasoline will damage the three way catalyst.
Using a fuel other than that specified could adversely affect the emission control devices and systems, and could also affect warranty coverage.

Precautions for Air Conditioning

Use an approved refrigerant recovery unit any time the air conditioning system must be discharged. Refer to HA section ("R-134a Service Procedure", "SERVICE PROCEDURES") for specific instructions.

- **AN ALPHABETICAL INDEX** is provided at the end of this manual so that you can rapidly find the item and page you are searching for.
- **A QUICK REFERENCE INDEX,** a black tab (e.g., BR) is provided on the first page. You can quickly find the first page of each section by mating it to the section's black tab.
- **THE CONTENTS** are listed on the first page of each section.
- **THE TITLE** is indicated on the upper portion of each page and shows the part or system.
- **THE PAGE NUMBER** of each section consists of two letters which designate the particular section and a number (e.g., "BR-5").
- **THE LARGE ILLUSTRATIONS** are exploded views (see below) and contain tightening torques, lubrication points, section number of the **PARTS CATALOG** (e.g., SEC.440) and other information necessary to perform repairs.
  The illustrations should be used in reference to service matters only. When ordering parts, refer to the appropriate **PARTS CATALOG.**

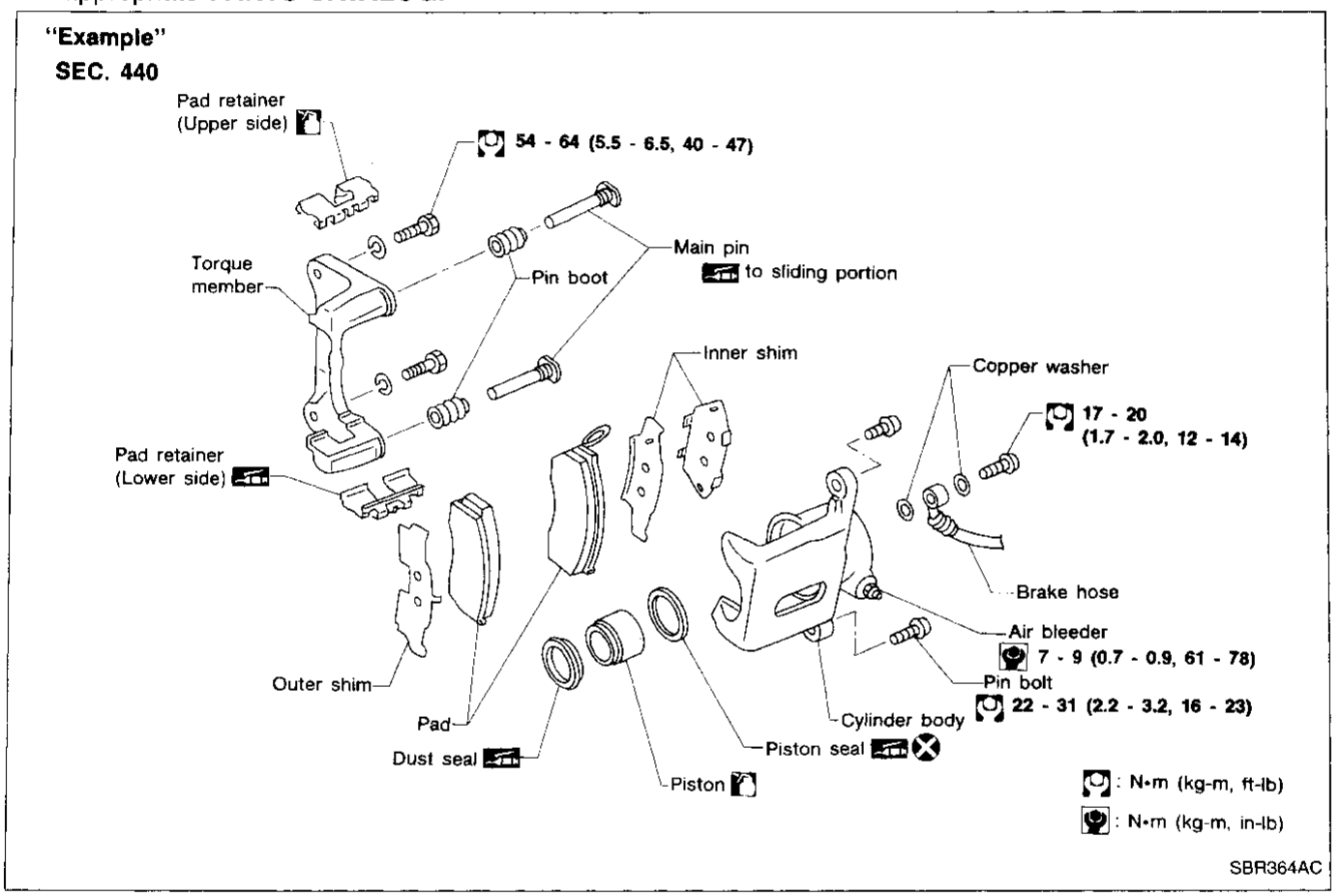

- **THE SMALL ILLUSTRATIONS** show the important steps such as inspection, use of special tools, knacks of work and hidden or tricky steps which are not shown in the previous large illustrations.
  Assembly, inspection and adjustment procedures for the complicated units such as the automatic transaxle or transmission, etc. are presented in a step-by-step format where necessary.

- The following **SYMBOLS AND ABBREVIATIONS** are used:

	:	Tightening torque
	:	Should be lubricated with grease. Unless otherwise indicated, use recommended multi-purpose grease.
	:	Should be lubricated with oil.
	:	Sealing point
	:	Checking point
	:	Always replace after every disassembly.
Ⓟ	:	Apply petroleum jelly.
ATF	:	Apply ATF.
★	:	Select with proper thickness.
☆	:	Adjustment is required.
SDS	:	Service Data and Specifications
LH, RH	:	Left-Hand, Right-Hand
FR, RR	:	Front, Rear
M/T	:	Manual Transaxle/Transmission
A/T	:	Automatic Transaxle/Transmission
4x4	,	
4WD	:	4-Wheel Drive
2WD	:	2-Wheel Drive
A/C	:	Air Conditioner
P/S	:	Power Steering
Tool	:	Special Service Tools
SAE	:	Society of Automotive Engineers, Inc.
ATF	:	Automatic Transmission Fluid
D_1	:	Drive range 1st gear
D_2	:	Drive range 2nd gear
D_3	:	Drive range 3rd gear
D_4	:	Drive range 4th gear
OD	:	Overdrive
2_2	:	2nd range 2nd gear
2_1	:	2nd range 1st gear
1_2	:	1st range 2nd gear
1_1	:	1st range 1st gear

- The **UNITS** given in this manual are primarily expressed as the SI UNIT (International System of Unit), and alternatively expressed in the metric system and in the yard/pound system.
  "Example"
  Tightening torque:
  59 - 78 N·m (6.0 - 8.0 kg-m, 43 - 58 ft-lb)
- **TROUBLE DIAGNOSES** are included in sections dealing with complicated components.
- **SERVICE DATA AND SPECIFICATIONS** are contained at the end of each section for quick reference of data.
- The captions **WARNING** and **CAUTION** warn you of steps that must be followed to prevent personal injury and/or damage to some part of the vehicle.
  WARNING indicates the possibility of personal injury if instructions are not followed.
  CAUTION indicates the possibility of component damage if instructions are not followed.
  BOLD TYPED STATEMENTS except **WARNING** and **CAUTION** give you helpful information.

Sample/Wiring Diagram — EXAMPL —

- For Description, refer to GI-11.

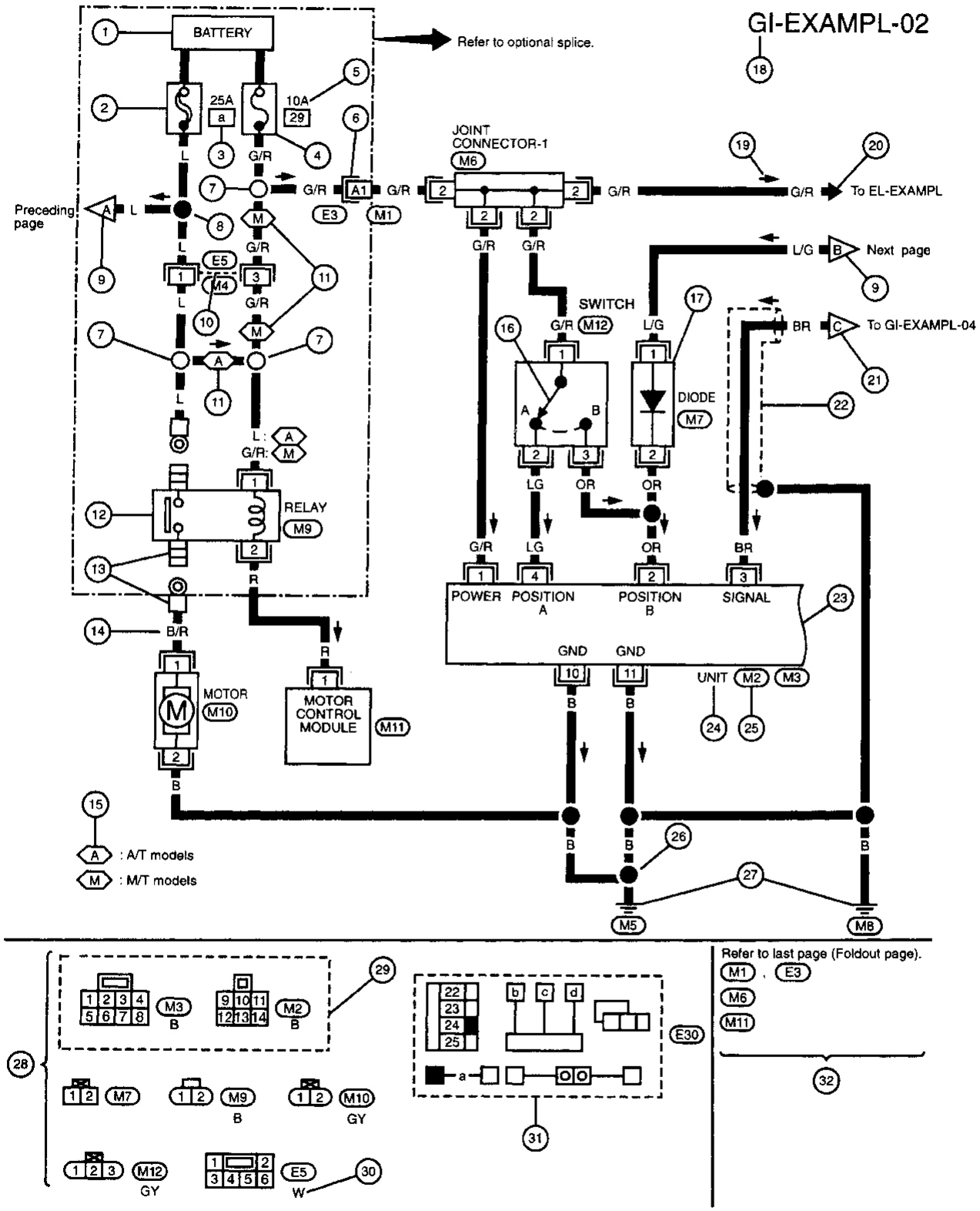

AGI064

OPTIONAL SPLICE

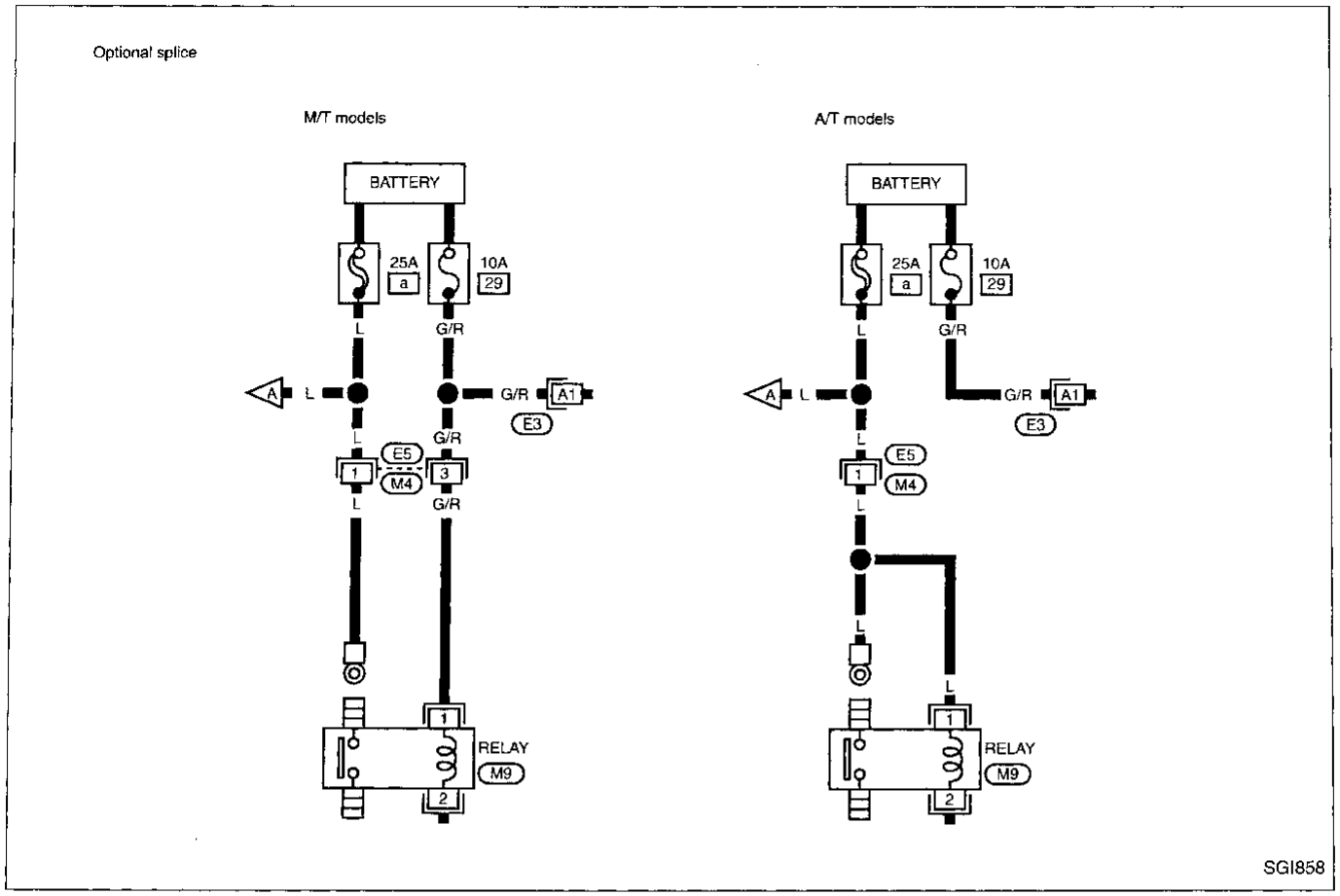

Description

Number	Item	Description
①	Power condition	● This shows the condition when the system receives battery positive voltage (can be operated).
②	Fusible link	● The double line shows that this is a fusible link. ● The open circle shows current flow in, and the shaded circle shows current flow out.
③	Fusible link/fuse location	● This shows the location of the fusible link or fuse in the fusible link or fuse box. For arrangement, refer to EL section ("POWER SUPPLY ROUTING").
④	Fuse	● The single line shows that this is a fuse. ● The open circle shows current flow in, and the shaded circle shows current flow out.
⑤	Current rating	● This shows the current rating of the fusible link or fuse.
⑥	Connectors	● This shows that connector (E3) is female and connector (M1) is male. ● The G/R wire is located in the A1 terminal of both connectors. ● Alphabetic letters with terminal numbers (A1, B5, etc.) indicate that the connector is SMJ connector. Refer to GI-16.
⑦	Optional splice	● The open circle shows that the splice is optional depending on vehicle application.
⑧	Splice	● The shaded circle shows that the splice is always on the vehicle.
⑨	Page crossing	● This arrow shows that the circuit continues to an adjacent page. ● The A will match with the A on the preceding or next page.
⑩	Common connector	● The dotted lines between terminals show that these terminals are part of the same connector.
⑪	Option abbreviation	● This shows that the circuit is optional depending on vehicle application.
⑫	Relay	● This shows an internal representation of the relay. For details, refer to EL section ("STANDARDIZED RELAY").
⑬	Connectors	● This shows that the connector is connected to the body or a terminal with bolt or nut.
⑭	Wire color	● This shows a code for the color of the wire. B = Black, BR = Brown W = White, OR = Orange R = Red, P = Pink G = Green, PU = Purple L = Blue, GY = Gray Y = Yellow, SB = Sky Blue LG = Light Green, CH = Dark Brown DG = Dark Green When the wire color is striped, the base color is given first, followed by the stripe color as shown below: Example: L/W = Blue with White Stripe
⑮	Option description	● This shows a description of the option abbreviation used on the page.
⑯	Switch	● This shows that continuity exists between terminals 1 and 2 when the switch is in the A position. Continuity exists between terminals 1 and 3 when the switch is in the B position.
⑰	Assembly parts	● Connector terminal in component shows that it is a harness incorporated assembly.
⑱	Cell code	● This identifies each page of the wiring diagram by section, system and wiring diagram page number.

Description (Cont'd)

Number	Item	Description
⑲	Current flow arrow	● Arrow indicates electric current flow, especially where the direction of standard flow (vertically downward or horizontally from left to right) is difficult to follow. ● A double arrow "◀▶" shows that current can flow in either direction depending on circuit operation.
⑳	System branch	● This shows that the system branches to another system identified by cell code (section and system).
㉑	Page crossing	● This arrow shows that the circuit continues to another page identified by cell code. ● The C will match with C on any other page within the system except the next or preceding page.
㉒	Shielded line	● The line enclosed by broken line circle shows shield wire.
㉓	Component box in wave line	● This shows that another part of the component is also shown on another page (indicated by wave line) within the system.
㉔	Component name	● This shows the name of a component.
㉕	Connector number	● This shows the connector number. ● The letter shows which harness the connector is located in. Example: **M**: main harness. For detail and to locate the connector, refer to EL section ("Main Harness", "HARNESS LAYOUT"). A coordinate grid is included for complex harnesses to aid in locating connectors.
㉖	Ground (GND)	● The line spliced and grounded under wire color shows that ground line is spliced at the grounded connector.
㉗	Ground (GND)	● This shows the ground connection.
㉘	Connector views	● This area shows the connector faces of the components in the wiring diagram on the page.
㉙	Common component	● Connectors enclosed in broken lines show that these connectors belong to the same component.
㉚	Connector color	● This shows a code for the color of the connector. For code meaning, refer to wire color codes, Number ⑭ of this chart.
㉛	Fusible link and fuse box	● This shows the arrangement of fusible link(s) and fuse(s), used for connector views of "POWER SUPPLY ROUTING" in EL section. The open square shows current flow in, and the shaded square shows current flow out.
㉜	Reference area	● This shows that more information on the Super Multiple Junction (SMJ) and Joint Connectors (J/C) exists on the foldout page. Refer to GI-16 for details.

Description (Cont'd)

CONNECTOR SYMBOLS

Most of connector symbols in wiring diagrams are shown from the terminal side.

- Connector symbols shown from the terminal side are enclosed by a single line and followed by the direction mark

.
- Connector symbols shown from the harness side are enclosed by a double line and followed by the direction mark

.

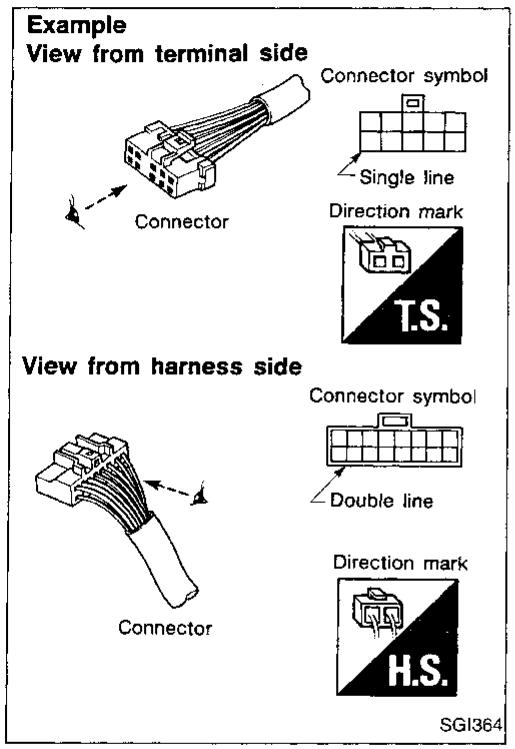

- Connector guides for male terminals are shown in black.
- Connector guides for female terminals are shown in white.

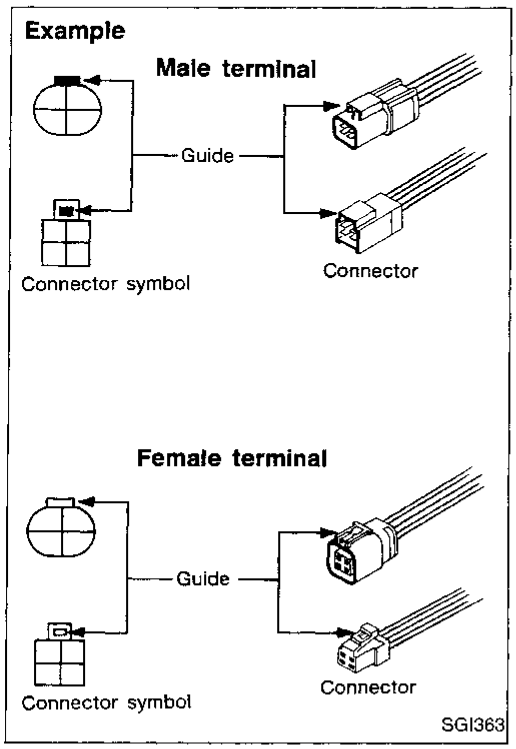

Description (Cont'd)

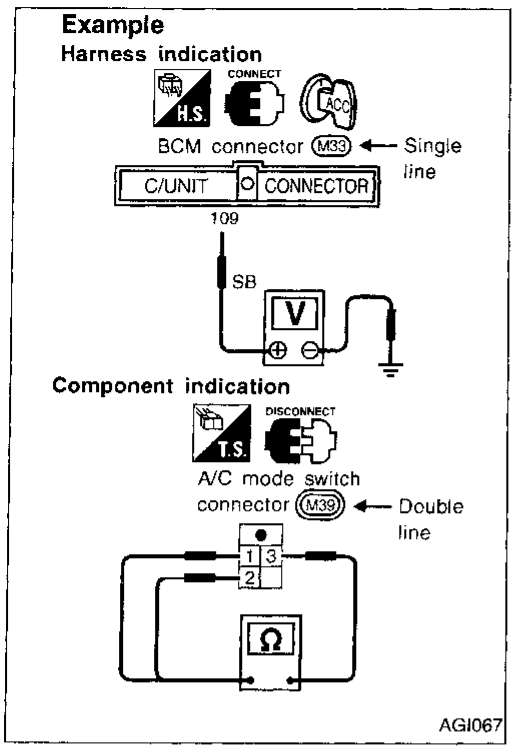

- Connector numbers that indicate harness are enclosed by a single line.
- Connector numbers that indicate components are enclosed by a double line.

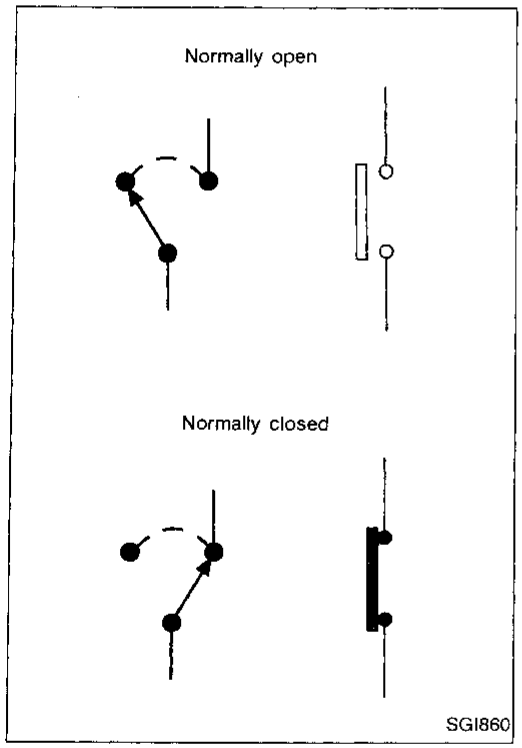

SWITCH POSITIONS

Switches are shown in wiring diagrams as if the vehicle is in the "normal" condition.

A vehicle is in the "normal" condition when:

- ignition switch is "OFF",
- doors, hood and trunk lid/back door are closed,
- pedals are not depressed, and
- parking brake is released.

Description (Cont'd)

DETECTABLE LINES AND NON-DETECTABLE LINES

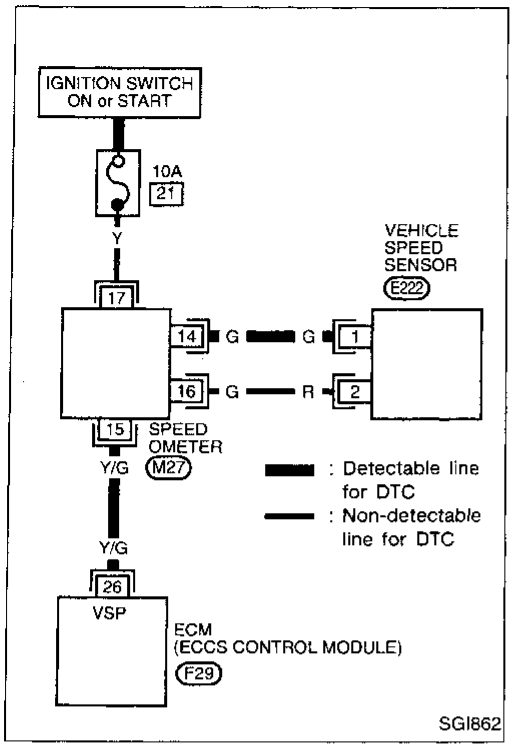

In some wiring diagrams, two kinds of lines with different thicknesses are used to represent wires.

- A line with regular thickness (wider line) represents a "detectable line for DTC (Diagnostic Trouble Code)". A "detectable line for DTC" is a circuit in which ECM (ECCS control module) can detect malfunctions with the on-board diagnostic system.
- A line with less thickness (thinner line) represents a "non-detectable line for DTC". A "non-detectable line for DTC" is a circuit in which ECM cannot detect malfunctions with the on-board diagnostic system.

MULTIPLE SWITCH

The continuity of multiple switch is described in two ways as shown below.

- The switch chart is used in schematic diagrams.
- The switch diagram is used in wiring diagrams.

Example

(SWITCH CHART)

WIPER SWITCH

	OFF	INT	LO	HI	WASH
1					○
2				○	
3	○	○	○		
4	○	○			
5		○			
6		○	○	○	○

(SWITCH DIAGRAM)

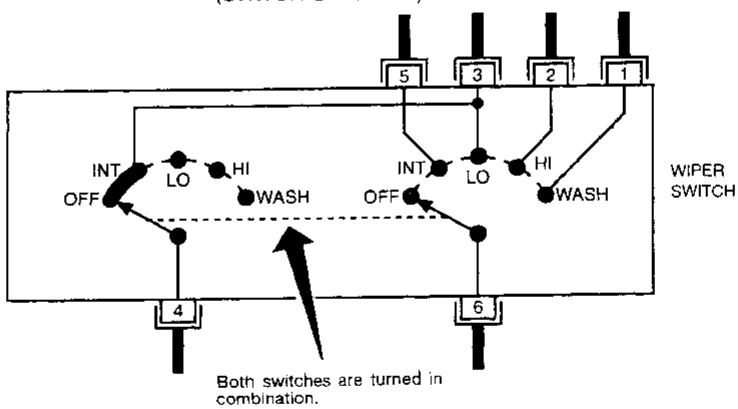

Continuity circuit of wiper switch

SWITCH POSITION	CONTINUITY CIRCUIT
OFF	3-4
INT	3-4, 5-6
LO	3-6
HI	2-6
WASH	1-6

AGI033

FOLDOUT PAGE

The foldout page should be opened when reading wiring diagram.

Super multiple junction (SMJ)

In wiring diagram, SMJ connectors include a letter of the alphabet with the terminal number for each terminal. SMJ connector numbers are shown in the Reference Area. Terminal arrangement can be found on the foldout page.
If connector numbers are shown in Reference Area, these connector symbols are not shown in Connector Area. For terminal arrangement of these connectors, refer to the foldout page at the end of this manual.

Joint connector

Joint connector symbols are shown in Connector Area of the wiring diagram. Inside wiring layout and joint connector terminal arrangement can be found on the foldout page.

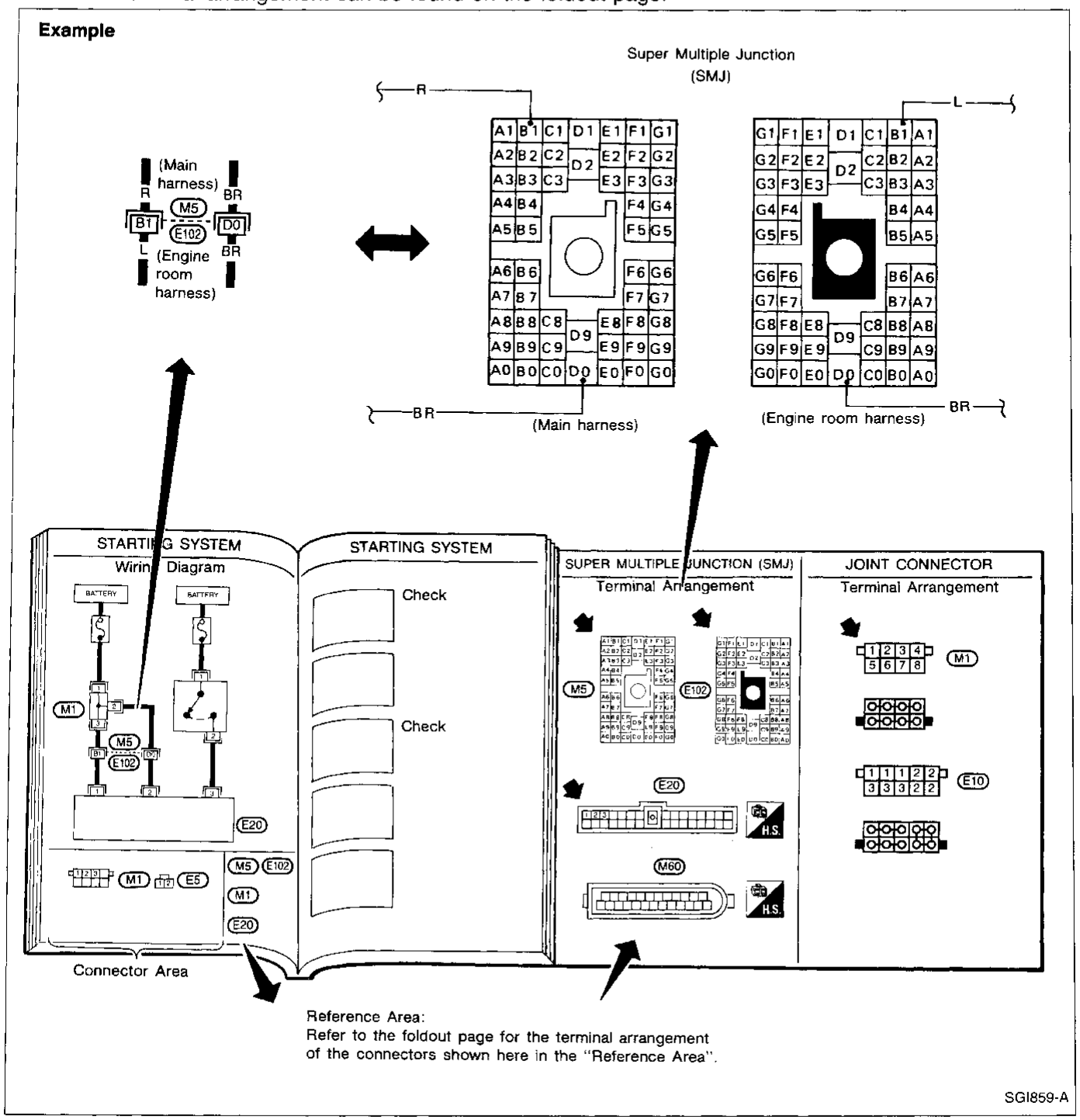

Wiring Diagram Codes (Cell Codes)

- Use the chart below to find out what each wiring diagram code stands for.
- Refer to the wiring diagram code in the Alphabetical Index to find the location (page number) of each wiring diagram.

Code	Section	Wiring Diagram Name
AAC/V	EC	IACV-AAC Valve
ABS	BR	Anti-lock Brake System
A/C	HA	Air Conditioner
AP/SEN	EC	Absolute Pressure Sensor
ASCD	EL	Automatic Speed Control Device (ASCD)
A/T	AT	Automatic Transmission
AUDIO	EL	Audio
BACK/L	EL	Back-up Lamp
BYPS/V	EC	Vacuum Cut Valve Bypass Valve
CANI/V	EC	EVAP Canister Purge Control Valve/ Solenoid Valve
CHARGE	EL	Charging System
CHIME	EL	Warning Chime
CKPS	EC	Crankshaft Position Sensor (OBD)
CMPS	EC	Camshaft Position Sensor
D/LOCK	EL	Power Door Lock
DTRL	EL	Headlamp - With Daytime Light System
ECTS	EC	Engine Coolant Temperature Sensor
EGRC/V	EC	EGRC-Solenoid Valve
EGRC1	EC	EGR System Function
EGR/TS	EC	EGR Temperature Sensor
FICD	EC	IACV-FICD Solenoid Valve
F/PUMP	EC	Fuel Pump Control
FRO2	EC	Front Heated Oxygen Sensor
FRO2/H	EC	Front Heated Oxygen Sensor Heater
FUEL	EC	Fuel Injection System Function
HEATER	HA	Heater System
H/LAMP	EL	Headlamp - Without Daytime Light System
HORN	EL	Horn, Lighter and Clock
IATS	EC	Intake Air Temperature Sensor
IGN/SG	EC	Ignition Signal
ILL	EL	Illumination
INJECT	EC	Injector
INT/L	EL	Interior and Map Lamps

Code	Section	Wiring Diagram Name
MAFS	EC	Mass Air Flow Sensor
MAIN	EC	Main Power Supply and Ground Circuit
METER	EL	Speedometer, Tachometer, Temp. and Fuel Gauges
MIL/DL	EC	MIL & Data Link Connectors
MIRROR	EL	Door Mirror
PGC/V	EC	EVAP Canister Purge Control Solenoid Valve
PNP/SW	EC	Park/Neutral Position Switch
POWER	EL	Power Supply Routing
PRE/SE	EC	EVAP Control System Pressure Sensor
PST/SW	EC	Power Steering Oil Pressure Switch
RRO2	EC	Rear Heated Oxygen Sensor
RRO2/H	EC	Rear Heated Oxygen Sensor Heater
SHIFT	AT	A/T Shift Lock System
SRS	RS	Supplemental Restraint System
S/SIG	EC	Start Signal
START	EL	Starting System
S/VCSW	EC	Swirl Control Valve Control Vacuum Check Switch
SWL/V	EC	Swirl Control Valve Control Solenoid Valve
SW/V	EC	MAP/BARO Switch Solenoid Valve
TAIL/L	EL	Clearance, License, Tail and Stop Lamps
TFTS	EC	Tank Fuel Temperature Sensor
TPS	EC	Throttle Position Sensor
TP/SW	EC	Throttle Position Switch
TURN	EL	Turn Signal and Hazard Warning Lamps
VENT/V	EC	EVAP Canister Vent Control Valve
VSS	EC	Vehicle Speed Sensor
WARN	EL	Warning Lamps
WINDOW	EL	Power Window
WIPER	EL	Front Wiper and Washer

Work Flow

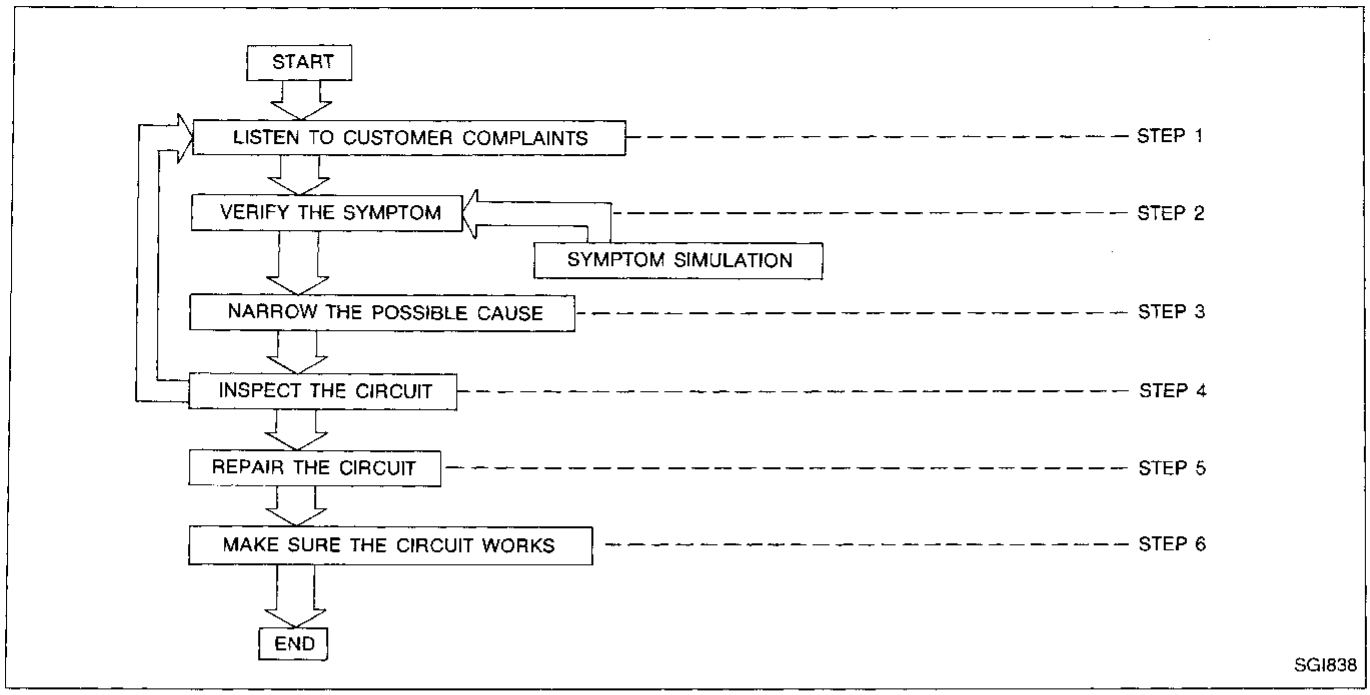

STEP	DESCRIPTION
STEP 1	Get detailed information about the conditions and the environment when the incident occurred. The following are key pieces of information required to make a good analysis: **WHAT** Vehicle Model, Engine, Transmission and the System (i.e., Radio). **WHEN** Date, Time of Day, Weather Conditions, Frequency. **WHERE** Road Conditions, Altitude and Traffic Situation. **HOW** System Symptoms, Operating Conditions (Other Components Interaction). Service History and if any After Market Accessories have been installed.
STEP 2	Operate the system, road test if necessary. Verify the parameter of the incident. If the problem can not be duplicated, refer to "Incident Simulation Tests" next page.
STEP 3	Get the proper diagnosis materials together, including: POWER SUPPLY ROUTING System Operation Descriptions Applicable Service Manual Sections Check for Any Service Bulletins Identify where to begin diagnosis based upon your knowledge of the system operation and the customer comments.
STEP 4	Inspect the system for mechanical binding, loose connectors or wiring damage. Determine which circuits and components are involved and diagnose using the Power Supply Routing and Harness Layouts.
STEP 5	Repair or replace the incident circuit or component.
STEP 6	Operate the system in all modes. Verify that the system works properly under all conditions. Make sure you have not inadvertently created a new incident during your diagnosis or repair steps.

Incident Simulation Tests

INTRODUCTION

Sometimes the symptom is not present when the vehicle is brought in for service. If possible, recreate the conditions present at the time of the incident. Doing so may help avoid a No Trouble Found Diagnosis. The following section illustrates ways to simulate the conditions/environment under which the owner experiences an electrical incident.

The section is broken into the six following topics:

- Vehicle vibration
- Heat sensitive
- Freezing
- Water intrusion
- Electrical load
- Cold or hot start up

Get a thorough description of the incident from the customer. It is important for simulating the conditions of the problem.

VEHICLE VIBRATION

The problem may occur or become worse while driving on a rough road or when engine is vibrating (idle with A/C on). In such a case, you will want to check for a vibration related condition. Refer to the illustration below.

Connectors & harness

Determine which connectors and wiring harnesses would affect the electrical system you are inspecting. **Gently** shake each connector and harness while monitoring the system for the incident you are trying to duplicate. This test may indicate a loose or poor electrical connection.

Hint

Connectors can be exposed to moisture. It is possible for a thin film of corrosion to build up on the connector terminals. A visual inspection may not reveal this without disconnecting the connector. If the problem occurs intermittently, perhaps the problem is caused by corrosion. It is a good idea to disconnect, inspect and clean the terminals on related connectors in the system.

Sensors & relays

Gently apply a slight vibration to sensors and relays in the system you are inspecting.
This test may indicate a loose or poorly mounted sensor or relay.

Vibration test

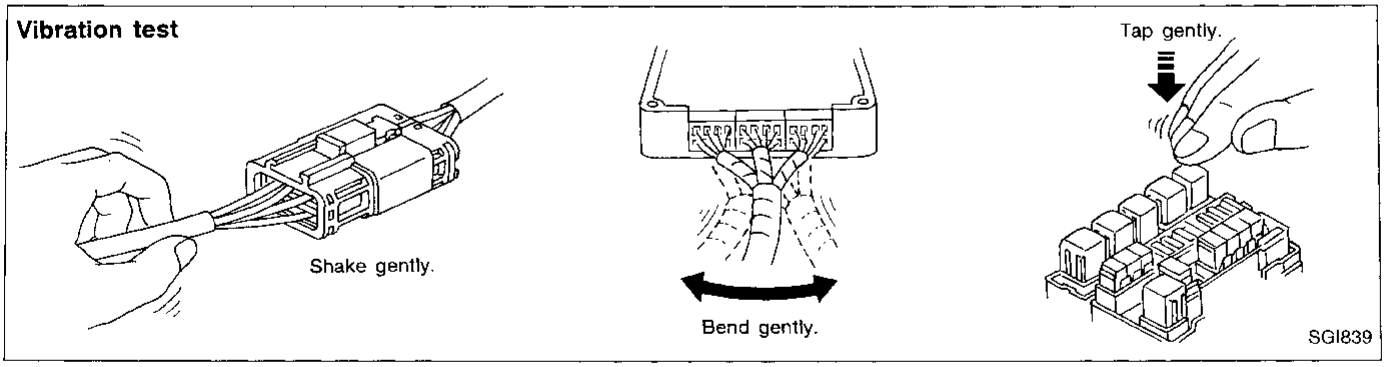

Incident Simulation Tests (Cont'd)

Possible cause

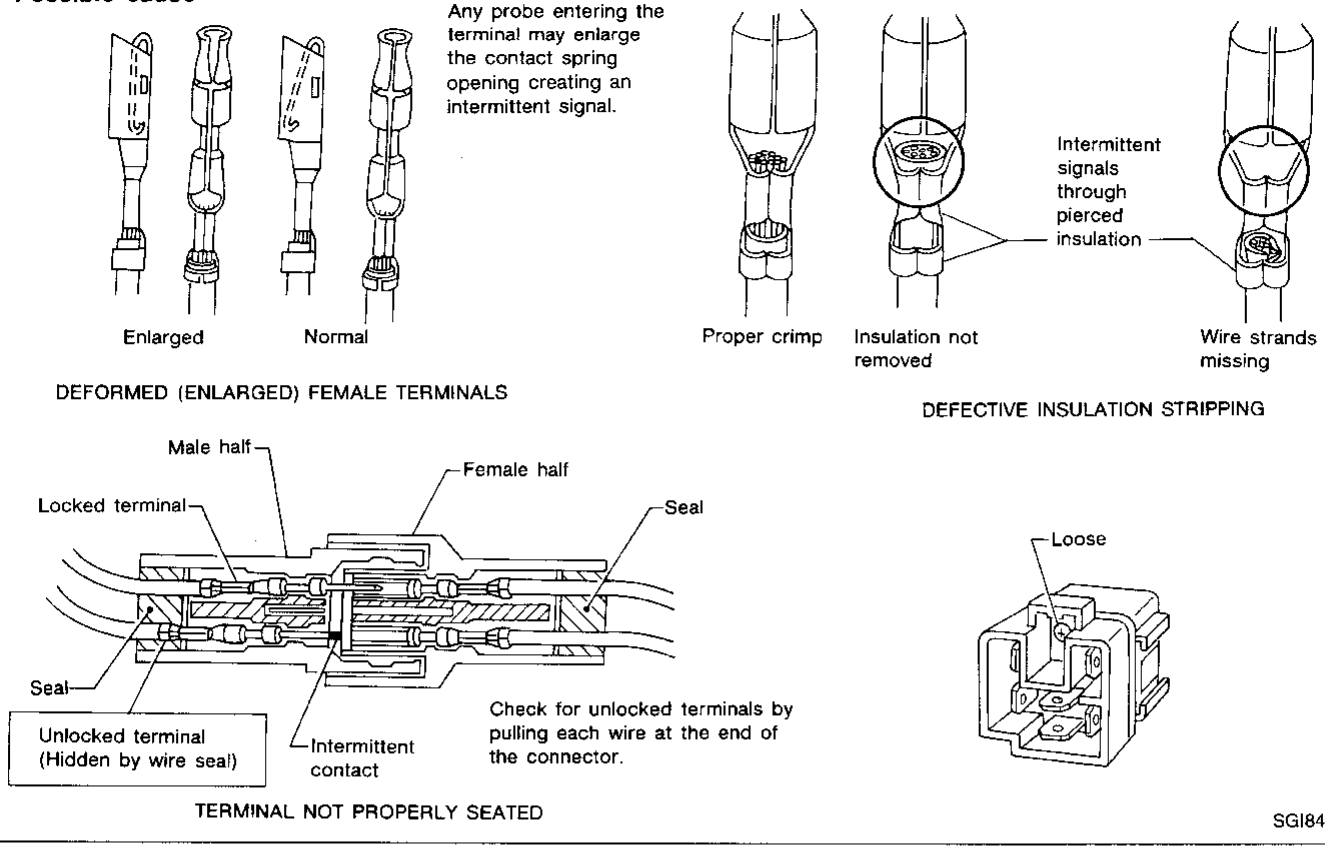

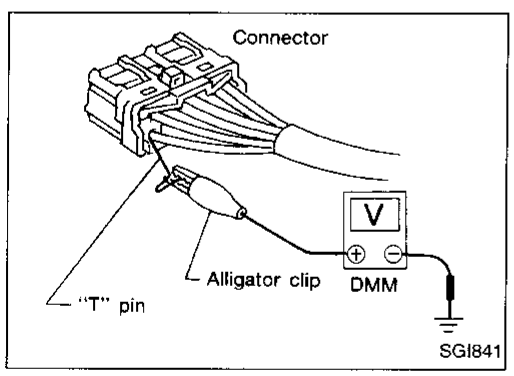

Tester probe

When probing a connector it is possible to enlarge the contact spring opening. If this occurs it may create an intermittent signal in the circuit. When probing a connector, use care not to enlarge the opening. The probe of the Digital Multimeter (DMM) may not fit into the connector cavity. In such cases make an extension of a "T" pin and probe it from the harness side of the connector. Most DMMs have accessory alligator clips. Slide these over the probe to allow clipping the "T" pin for a better contact. If you have any difficulty probing a terminal, inspect the terminal. Ensure that you have not accidentally opened the contact spring or pulled a wire loose.

Incident Simulation Tests (Cont'd)

Engine compartment

There are several reasons why a vehicle or engine vibration could cause an electrical complaint. Some of the things to check for are:

- Connectors not fully seated.
- Wiring harness not long enough and stressed due to engine vibrations or rocking.
- Wires laying across brackets or moving components.
- Loose, dirty or corroded ground wires.
- Wires routed too close to hot components.

To inspect components under the hood, start by verifying the integrity of ground connections. (Refer to GROUND INSPECTION described later.) First check that the system is properly grounded. Then check for loose connection by **gently shaking** the wiring or components as previously explained. Using the wiring diagrams inspect the wiring for continuity.

Behind the instrument panel

An improperly routed or improperly clamped harness can become pinched during accessory installation. Vehicle vibration can aggravate a harness which is routed along a bracket or near a screw.

Under seating areas

An unclamped or loose harness can cause wiring to be pinched by seat components (such as slide guides) during vehicle vibration. If the wiring runs under seating areas, inspect wire routing for possible damage or pinching.

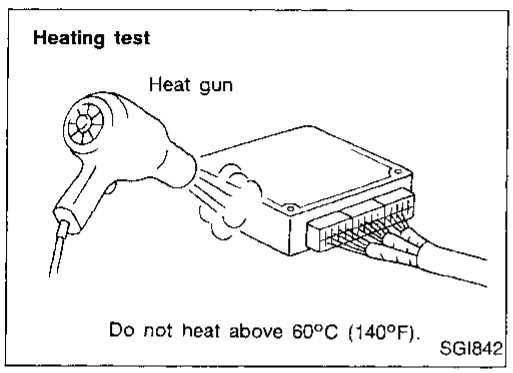

HEAT SENSITIVE

The owner's problem may occur during hot weather or after car has sat for a short time. In such cases you will want to check for a heat sensitive condition.

To determine if an electrical component is heat sensitive, heat the component with a heat gun or equivalent.

Do not heat components above 60°C (140°F). If incident occurs while heating the unit, either replace or properly insulate the component.

Incident Simulation Tests (Cont'd)

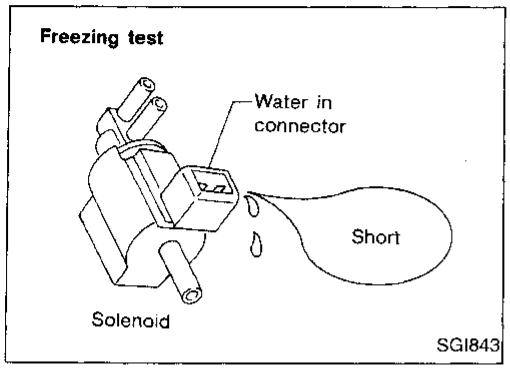

FREEZING

The customer may indicate that the incident goes away after the car warms up (winter time). The cause could be related to water freezing somewhere in the wiring/electrical system.
There are two methods to check for this. The first is to arrange for the owner to leave his car overnight. Make sure it will get cold enough to demonstrate his complaint. Leave the car parked outside overnight. In the morning, do a quick and thorough diagnosis of those electrical components which could be affected.
The second method is to put the suspect component into a freezer long enough for any water to freeze. Reinstall the part into the car and check for reoccurrence of the incident. If it occurs, repair or replace the component.

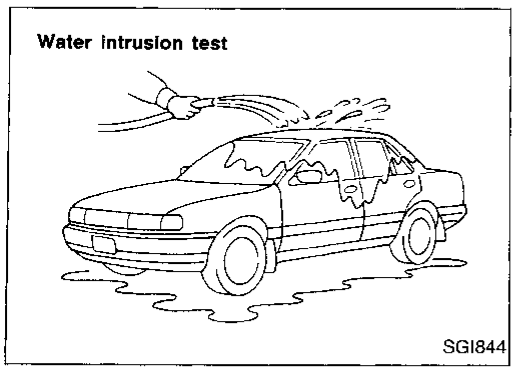

WATER INTRUSION

The incident may occur only during high humidity or in rainy/snowy weather. In such cases the incident could be caused by water intrusion on an electrical part. This can be simulated by soaking the car or running it through a car wash.

Do not spray water directly on any electrical components.

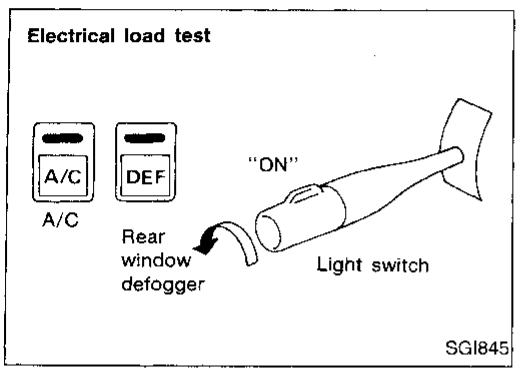

ELECTRICAL LOAD

The incident may be electrical load sensitive. Perform diagnosis with all accessories (including A/C, rear window defogger, radio, fog lamps) turned on.

COLD OR HOT START UP

On some occasions an electrical incident may occur only when the car is started cold. Or it may occur when the car is restarted hot shortly after being turned off. In these cases you may have to keep the car overnight to make a proper diagnosis.

Circuit Inspection

CONNECTOR AND TERMINAL PIN KIT

Use the connector and terminal pin kit listed below when replacing connectors or terminals.
The connector and terminal pin kit contains some of the most commonly used NISSAN connectors and terminals.

Tool number (Kent-Moore No.) Tool name	Description
— (J38751-95NI) Connector and terminal pin kit	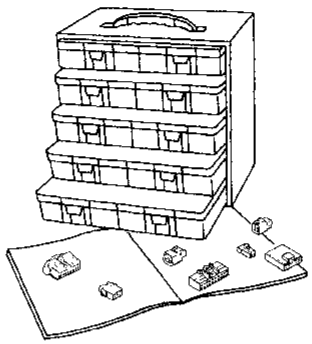 AGI063

INTRODUCTION

In general, testing electrical circuits is an easy task if approached logically. Before beginning, it is important to have all available information on the system to be tested. Also, get a thorough understanding of system operation. Then you will be able to use the appropriate equipment and follow the correct test procedure.
You may have to simulate vehicle vibrations while testing electrical components. **Gently shake** the wiring harness or electrical component to do this.

OPEN — A circuit is open when there is no continuity through a section of the circuit.

SHORT — There are two types of shorts.

- SHORT CIRCUIT — When a circuit contacts another circuit and causes the normal resistance to change.
- SHORT TO GROUND — When a circuit contacts a ground source and grounds the circuit.

TESTING FOR "OPENS" IN THE CIRCUIT

Before you begin to diagnose and test the system, you should rough sketch a schematic of the system. This will help you to logically walk through the diagnosis process. Drawing the sketch will also reinforce your working knowledge of the system.

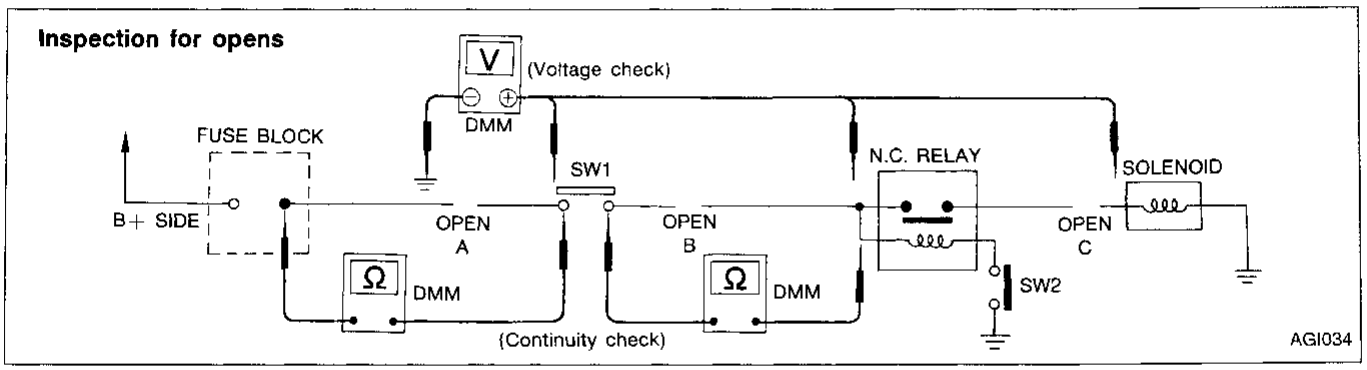

Continuity check method

The continuity check is used to find an open in the circuit. The Digital Multimeter (DMM) set on the resistance function will indicate an open circuit as over limit (OL, no beep tone or no ohms symbol). Make sure no power is supplied to the checked component. Always start with the DMM at the highest resistance level.
To help in understanding the diagnosis of open circuits please refer to the schematic above.

1. Disconnect the battery negative cable.
2. Start at one end of the circuit and work your way to the other end (At the fuse block in this example).
3. Connect one probe of the DMM to the fuse block terminal on the load side.
4. Connect the other probe to the fuse block (power) side of SW1. Little or no resistance will indicate that portion of the circuit has good continuity. If there were an open in the circuit, the DMM would indicate an over limit or infinite resistance condition (point A).
5. Connect the probes between SW1 and the relay. Little or no resistance will indicate that portion of the circuit has good continuity. If there were an open in the circuit, the DMM would indicate an over limit or infinite resistance condition (point B).
6. Connect the probes between the relay and the solenoid. Little or no resistance will indicate that portion of the circuit has good continuity. If there were an open in the circuit, the DMM would indicate an over limit or infinite resistance condition (point C).

Any circuit can be diagnosed using the approach in the above example.

Voltage check method

To help in understanding the diagnosis of open circuits please refer to the previous schematic.
In any powered circuit, an open can be found by methodically checking the system for voltage. This is done by switching the DMM to the voltage function.

1. Connect one probe of the DMM to a known good ground.
2. Begin probing at one end of the circuit and work your way to the other end.
3. With SW1 open, probe at SW1 to check for voltage.
   - Voltage: Open is further down the circuit than SW1.
   - No voltage: Open is between fuse block and SW1 (point A).
4. Close SW1 and probe at relay.
   - Voltage: Open is further down the circuit than the relay.
   - No voltage: Open is between SW1 and relay (point B).
5. Close the relay and probe at the solenoid.
   - Voltage: Open is further down the circuit than the solenoid.
   - No voltage: Open is between relay and solenoid (point C).

Any powered circuit can be diagnosed using the approach in the above example.

TESTING FOR "SHORTS" IN THE CIRCUIT

To simplify the discussion of shorts in the system please refer to the schematic below.

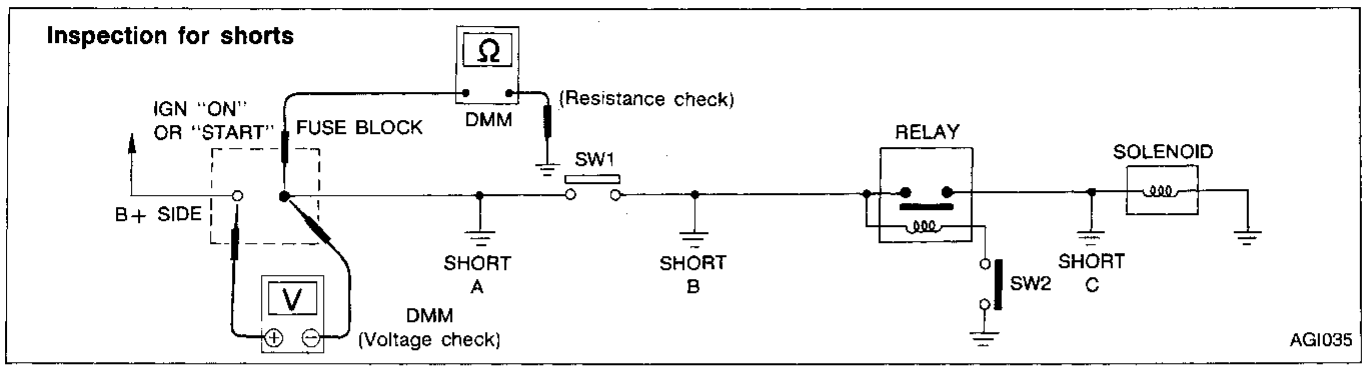

Resistance check method

1. Disconnect the battery negative cable and remove the blown fuse.
2. Disconnect all loads (SW1 open, relay disconnected and solenoid disconnected) powered through the fuse.
3. Connect one probe of the ohmmeter to the load side of the fuse terminal. Connect the other probe to a known good ground.
4. With SW1 open, check for continuity.
   Continuity: Short is between fuse terminal and SW1 (point A).
   No continuity: Short is further down the circuit than SW1.
5. Close SW1 and disconnect the relay. Put probes at the load side of fuse terminal and a known good ground. Then, check for continuity.
   Continuity: Short is between SW1 and the relay (point B).
   No continuity: Short is further down the circuit than the relay.
6. Close SW1 and jump the relay contacts with jumper wire. Put probes at the load side of fuse terminal and a known good ground. Then, check for continuity.
   Continuity: Short is between relay and solenoid (point C).
   No continuity: Check solenoid, retrace steps.

Voltage check method

1. Remove the blown fuse and disconnect all loads (i.e., SW1 open, relay disconnected and solenoid disconnected) powered through the fuse.
2. Turn the ignition key to the ON or START position. Verify battery voltage at the B+ side of the fuse terminal (one lead on the B+ terminal side of the fuse block and one lead on a known good ground).
3. With SW1 open and the DMM leads across both fuse terminals, check for voltage.
   Voltage: Short is between fuse block and SW1 (point A).
   No voltage: Short is further down the circuit than SW1.
4. With SW1 closed, relay and solenoid disconnected and the DMM leads across both fuse terminals, check for voltage.
   Voltage: Short is between SW1 and the relay (point B).
   No voltage: Short is further down the circuit than the relay.
5. With SW1 closed, relay contacts jumped with fused jumper wire check for voltage.
   Voltage: Short is down the circuit of the relay or between the relay and the disconnected solenoid (point C).
   No voltage: Retrace steps and check power to fuse block.

GROUND INSPECTION

Ground connections are very important to the proper operation of electrical and electronic circuits. Ground connections are often exposed to moisture, dirt and other corrosive elements. The corrosion (rust) can become an unwanted resistance. This unwanted resistance can change the way a circuit works.
Electronically controlled circuits are very sensitive to proper grounding. A loose or corroded ground can drastically affect an electronically controlled circuit. A poor or corroded ground can easily affect the circuit. Even when the ground connection looks clean, there can be a thin film of rust on the surface.
When inspecting a ground connection follow these rules:

1. Remove the ground bolt screw or clip.
2. Inspect all mating surfaces for tarnish, dirt, rust, etc.
3. Clean as required to assure good contact.
4. Reinstall bolt or screw securely.
5. Inspect for "add-on" accessories which may be interfering with the ground circuit.
6. If several wires are crimped into one ground eyelet terminal, check for proper crimps. Make sure all of the wires are clean, securely fastened and providing a good ground path. If multiple wires are cased in one eyelet make sure no ground wires have excess wire insulation.

Ground Inspection

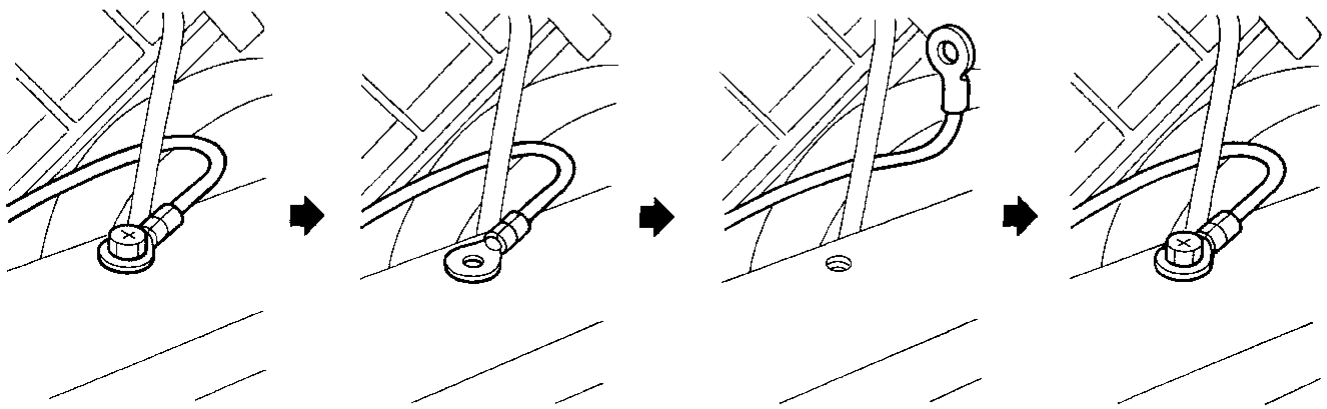

SGI853

VOLTAGE DROP TESTS

Voltage drop tests are often used to find components or circuits which have excessive resistance. A voltage drop in a circuit is caused by a resistance **when the circuit is in operation**.
Check the wire in the illustration. When measuring resistance with ohmmeter, contact by a single strand of wire will give reading of 0 ohms. This would indicate a good circuit. When the circuit operates, this single strand of wire is not able to carry the current. The single strand will have a high resistance to the current. This will be picked up as a slight voltage drop.
Unwanted resistance can be caused by many situations:

- Undersized wiring (single strand example)
- Corrosion on switch contacts
- Loose wire connections or splices.

If repairs are needed, always use wire that is of the same or larger gauge.

Measuring voltage drop — Accumulated method

1. Connect the voltmeter across the connector or part of the circuit you want to check. The positive lead of the voltmeter should be closer to power and negative lead closer to ground.
2. Operate the circuit.
3. The voltmeter will indicate how many volts are being used to "push" current through that part of the circuit.

Note in the illustration that there is an excessive 4.1 volt drop between the battery and the bulb.

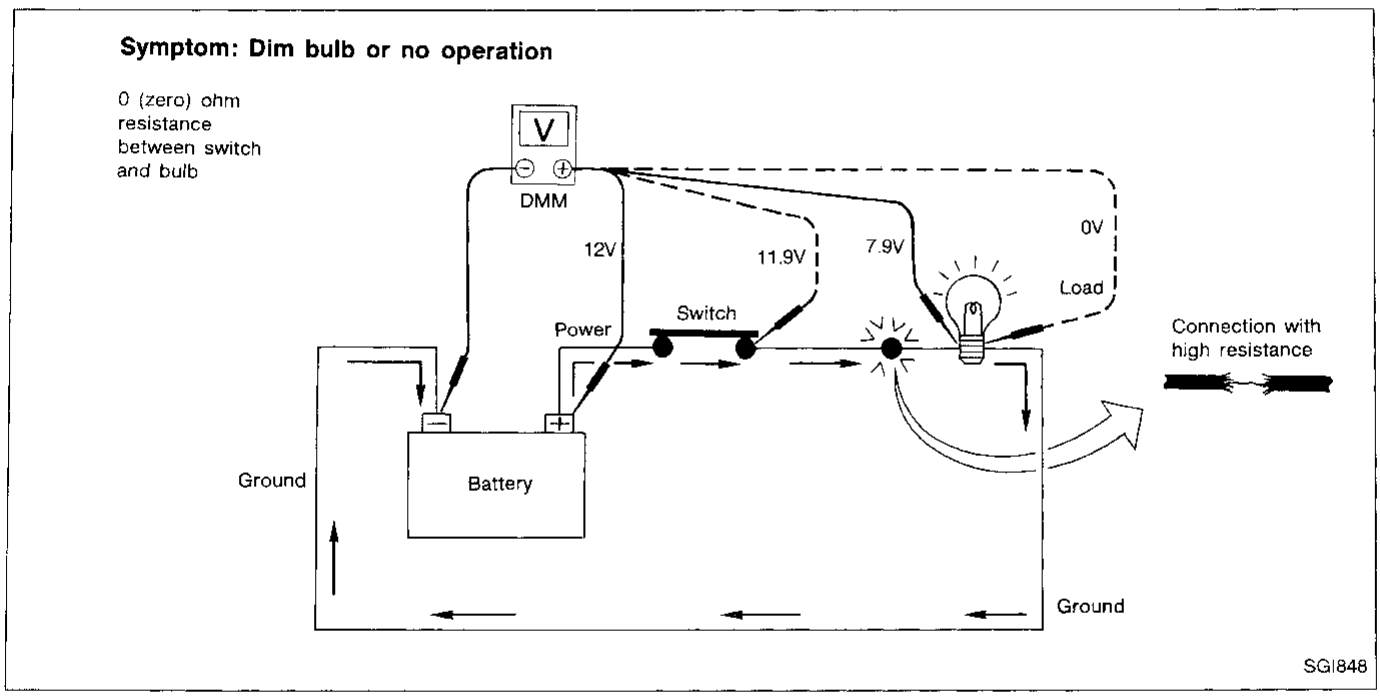

Measuring voltage drop — Step by step

The step by step method is most useful for isolating excessive drops in low voltage systems (such as computer controlled systems).
Circuits in the computer controlled system operate on very low amperage.
Computer controlled operations can be adversely affected by any variation in resistance in the system. Such resistance variation may be caused by poor connection, improper installation, improper wire gauge or corrosion.
The step by step voltage drop test can identify a component or wire with too much resistance.

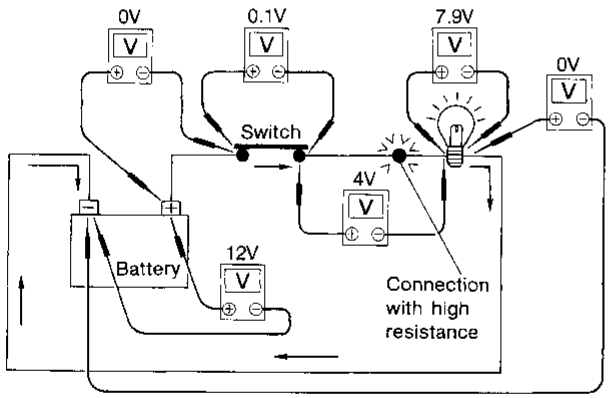

1. Connect the voltmeter as shown, starting at the battery and working your way around the circuit.
2. An unusually large voltage drop will indicate a component or wire that needs to be repaired. In the illustration, the poor connection causes a 4 volt drop.

The chart that follows illustrates some maximum allowable voltage drops. These values are given as a guideline, the exact value for each component may vary.

COMPONENT	VOLTAGE DROP
Wire	negligible <.001 volts
Ground Connections	Approx. 0.1 volts
Switch Contacts	Approx. 0.3 volts

AGI055

Circuit Inspection (Cont'd)

CONTROL UNIT CIRCUIT TEST

System Description: When the switch is ON, the ECM lights up the lamp.

Case 1

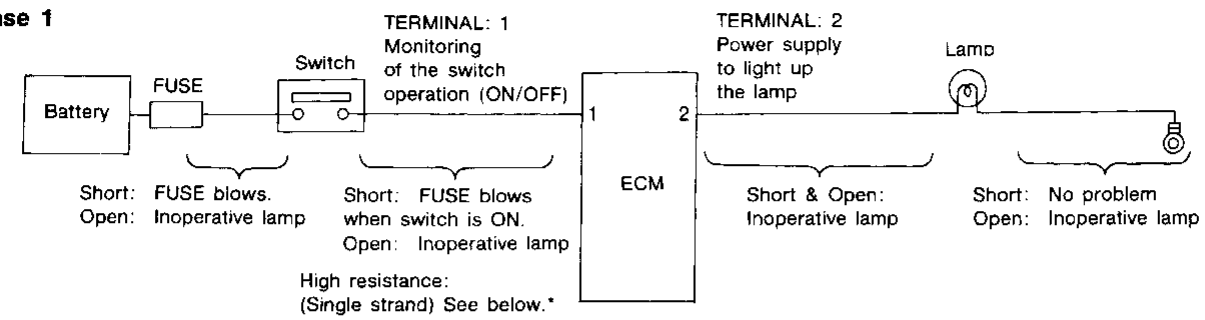

Input-output voltage chart

Pin No.	Item	Condition	Voltage value [V]	In case of high resistance such as single strand [V] *
1	Switch	Switch ON	Battery voltage	Lower than battery voltage Approx. 8 (Example)
		OFF	Approx. 0	Approx. 0
2	Lamp	Switch ON	Battery voltage	Approx. 0 (Inoperative lamp)
		OFF	Approx. 0	Approx. 0

The voltage value is based on the body ground.

* : If high resistance exists in the switch side circuit (caused by a single strand), terminal 1 does not detect battery voltage. ECM does not detect the switch is ON even if the switch does turn ON. Therefore, the ECM does not supply power to light up the lamp.

Case 2

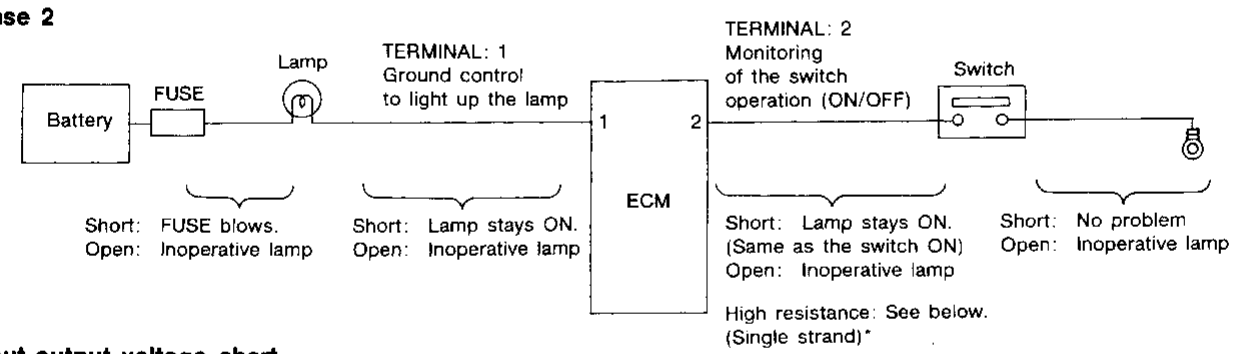

Input-output voltage chart

Pin No.	Item	Condition	Voltage value [V]	In case of high resistance such as single strand [V] *
1	Lamp	Switch ON	Approx. 0	Battery voltage (Inoperative lamp)
		OFF	Battery voltage	Battery voltage
2	Switch	Switch ON	Approx. 0	Higher than 0 Approx. 4 (Example)
		OFF	Approx. 5	Approx. 5

The voltage value is based on the body ground.

* : If high resistance exists in the switch side circuit (caused by a single strand), terminal 2 does not detect approx. 0V. ECM does not detect the switch is ON even if the switch does turn ON. Therefore, the ECM does not control ground to light up the lamp.

SGI849-A

The flow chart indicates work procedures required to diagnose problems effectively. Observe the following instructions before diagnosing.

1) **Use the flow chart after locating probable causes of a problem following the "Preliminary Check", the "Symptom Chart" or the "Work Flow".**
2) **After repairs, recheck that the problem has been completely eliminated.**
3) **Refer to Component Parts and Harness Connector Location for the systems described in each section for identification/location of components and harness connectors.**
4) **Refer to the Circuit Diagram for Quick Pinpoint Check.**
   If you must check circuit continuity between harness connectors in more detail, such as when a sub-harness is used, refer to Wiring Diagram in each individual section and Harness Layout in EL section for identification of harness connectors.
5) **When checking circuit continuity, ignition switch should be OFF.**
6) **Before checking voltage at connectors, check battery voltage.**
7) **After accomplishing the Diagnostic Procedures and Electrical Components Inspection, make sure that all harness connectors are reconnected properly.**

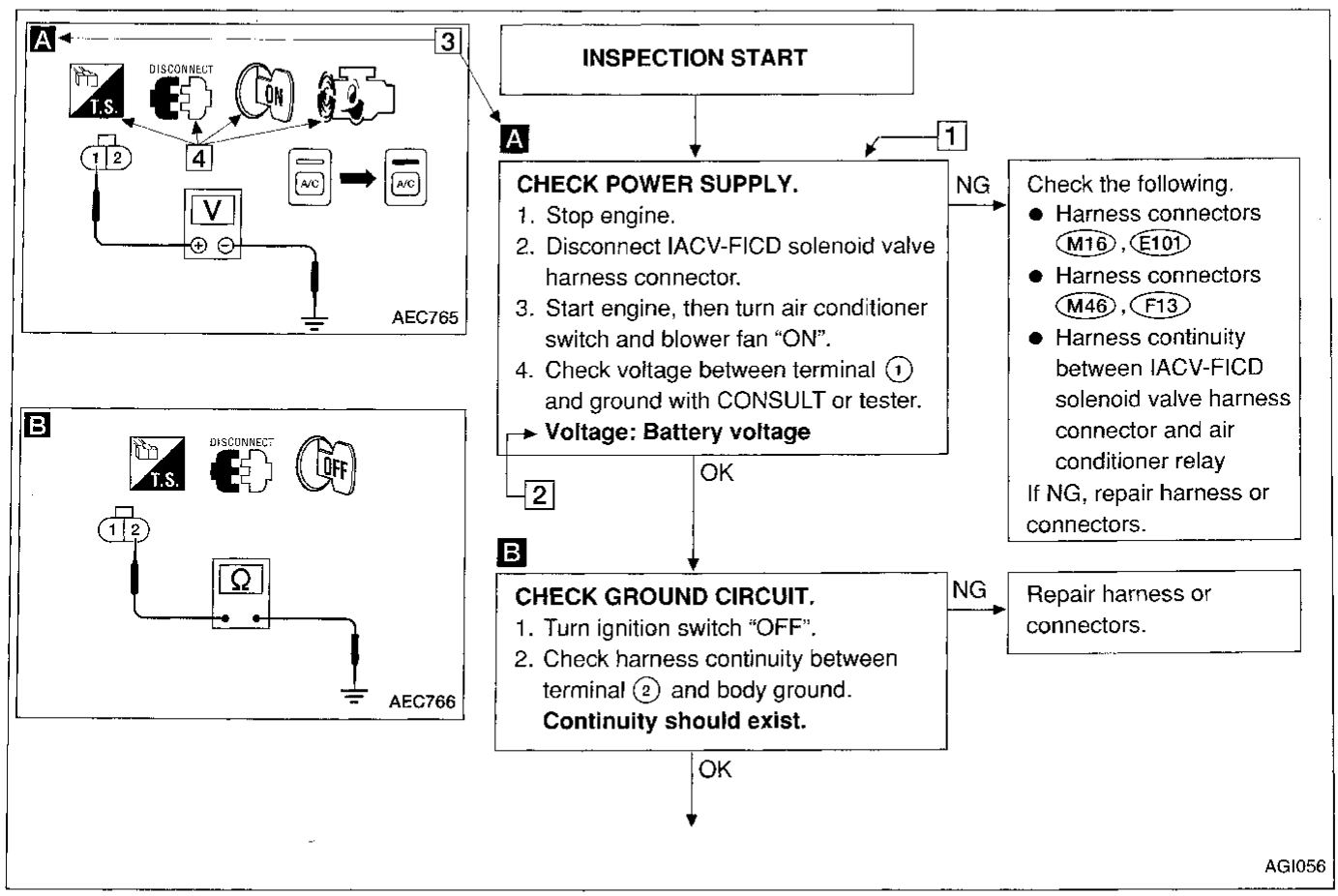

HOW TO FOLLOW THIS FLOWCHART

1 Work and diagnostic procedure

Start to diagnose a problem using procedures indicated in enclosed blocks, as shown in the following example.

A

CHECK POWER SUPPLY.
1. Stop engine.
2. Disconnect IACV-FICD solenoid valve harness connector.
3. Start engine, then turn air conditioner switch and blower fan "ON".
4. Check voltage between terminal ① and ground with CONSULT or tester.
Voltage: Battery voltage

← Check item being performed.

Procedure, steps or measurement results

2 Measurement results

Required results are indicated in bold type in the corresponding block, as shown below.
These have the following meanings:

Battery voltage → 11 - 14V or approximately 12V
Voltage: Approximately 0V → Less than 1V
Resistance: Continuity should exist → Approximately 0Ω

3 Cross reference of work symbols in the text and illustrations

Illustrations are provided as visual aids for work procedures. For example, symbol A indicated in the left upper portion of each illustration corresponds with the symbol in the flowchart for easy identification. More precisely, the procedure under the "CHECK POWER SUPPLY" outlined previously is indicated by an illustration A .

4 Symbols used in illustrations

Symbols included in illustrations refer to measurements or procedures. Before diagnosing a problem, familiarize yourself with each symbol.
For connector symbols, refer to "HOW TO READ WIRING DIAGRAMS" on GI-13.

Direction mark

Refer to "CONNECTOR SYMBOLS" on GI-13.

Key to symbols signifying measurements or procedures

Symbol	Symbol explanation	Symbol	Symbol explanation
DISCONNECT	Check after disconnecting the connector to be measured.		Procedure with CONSULT
CONNECT	Check after connecting the connector to be measured.		Procedure without CONSULT
	Insert key into ignition switch.	GST	Procedure with Generic Scan Tool (GST, OBD-II scan tool)
	Remove key from ignition switch.	NO TOOLS	Procedure without CONSULT or GST
OFF	Turn ignition switch to "OFF" position.	A/C	A/C switch is "OFF".
ON	Turn ignition switch to "ON" position.	A/C	A/C switch is "ON".
ST	Turn ignition switch to "START" position.	OFF 1 2 3 4	Fan switch is "ON". (At any position except for "OFF" position)
OFF→ACC	Turn ignition switch from "OFF" to "ACC" position.	OFF 1 2 3 4	Fan switch is "OFF".
ACC→OFF	Turn ignition switch from "ACC" to "OFF" position.	FUSE BAT	Apply positive voltage from battery with fuse directly to components.
OFF→ON	Turn ignition switch from "OFF" to "ON" position.		Drive vehicle.
ON→OFF	Turn ignition switch from "ON" to "OFF" position.	BAT	Disconnect battery negative cable.
	Do not start engine, or check with engine stopped.		Depress brake pedal.
	Start engine, or check with engine running.		Release brake pedal.
	Apply parking brake.		Depress accelerator pedal.
	Release parking brake.		Release accelerator pedal.
C H	Check after engine is warmed up sufficiently.	C/UNIT CONNECTOR or ECM CONNECTOR 8 H.S. DISCONNECT V	Pin terminal check for SMJ type ECM and A/T control unit connectors. **For details regarding the terminal arrangement, refer to the foldout page.**
V	Voltage should be measured with a voltmeter.		
Ω Ω	Circuit resistance should be measured with an ohmmeter.		
A	Current should be measured with an ammeter.		

Function and System Application

Diagnostic test mode	Function	ECCS	Air bag
Work support	This mode enables a technician to adjust some devices faster and more accurately by following the indications on CONSULT.	x	—
Self-diagnostic results	Self-diagnostic results can be read and erased quickly.	x	x
Trouble diagnostic record	Current self-diagnostic results and all trouble diagnostic records previously stored can be read.	—	x
ECU discriminated No.	Classification number of a replacement ECU can be read to prevent an incorrect ECU from being installed.	—	x
Data monitor	Input/Output data in the ECM can be read.	x	—
Active test	Diagnostic Test Mode in which CONSULT drives some actuators apart from the ECMs and also shifts some parameters in a specified range.	x	—
ECM part number	ECM part number can be read.	x	—
Function test	Conducted by CONSULT instead of a technician to determine whether each system is "OK" or "NG".	x	—

x: Applicable

Lithium Battery Replacement

CONSULT contains a lithium battery. When replacing the battery obey the following:

WARNING:

Replace the lithium battery with SANYO Electric Co., Ltd., CR2032 only. Use of another battery may present a risk of fire or explosion. The battery may present a fire or chemical burn hazard if mistreated. Do not recharge, disassemble of dispose of in fire.

Keep the battery out of reach of children and discard used battery conforming to the local regulations.

Checking Equipment

When ordering the equipment below, contact your NISSAN distributor.

Tool name	Description
NISSAN CONSULT ① CONSULT unit and accessories ② Program card UE950	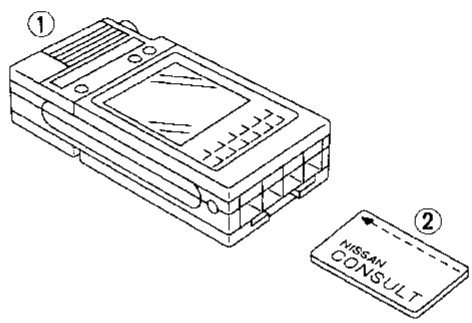 NT004

Model Variation

2-WHEEL DRIVE

Destination	Body		Engine	KA24E		
			Transmission	FS5W71C	FS5W71C	RL4R01A (Floor shift)
			Differential carrier	H190A	C200	H190A
Non-California, U.S.A.	Regular Cab	STD	Standard wheelbase	ABFALCFD21EUN	—	—
		XE		ABFALEFD21EUN	—	ABFALEAD21EUN
	King Cab	XE	Long wheelbase	BBFGLEFD21EUN	BBFGLEFD21EUN*	BBFGLEAD21EUN
		SE		—	BBFGLFFD21EUN	BBFGLFAD21EUN
California, U.S.A.	Regular Cab	STD	Standard wheelbase	ABFALCFD21EVN	—	—
		XE		ABFALEFD21EVN	—	ABFALEAD21EVN
	King Cab	XE	Long wheelbase	BBFGLEFD21EVN	BBFGLEFD21EVN*	BBFGLEAD21EVN
		SE		—	BBFGLFFD21EVN	BBFGLFAD21EVN
Canada	Regular Cab	STD	Standard wheelbase	ABFALCFD21ENN	—	—
		XE		ABFALEFD21ENN	—	ABFALEAD21ENN
	King Cab	XE	Long wheelbase	BBFGLEFD21ENN	BBFGLEFD21ENN*	BBFGLEAD21ENN
		SE		—	BBFGLFFD21ENN	BBFGLFAD21ENN

*: Option

4-WHEEL DRIVE

Destination	Body		Engine	KA24E	
			Transmission	FS5W71C	
			Transfer	TX10	
			Differential carrier	Front R180A	Rear H233B
Non-California, U.S.A.	Regular Cab	XE	Standard wheelbase	ABFNLEFD21EUN	
	King Cab	XE	Long wheelbase	BBFULEFD21EUN	
		SE		BBFULFFD21EUN	
California, U.S.A.	Regular Cab	XE	Standard wheelbase	ABFNLEFD21EVN	
	King Cab	XE	Long wheelbase	BBFULEFD21EVN	
		SE		BBFULFFD21EVN	
Canada	Regular Cab	XE	Standard wheelbase	ABFNLEFD21ENN	
	King Cab	XE	Long wheelbase	BBFULEFD21ENN	
		SE		BBFULFFD21ENN	

Model Variation (Cont'd)

Prefix and suffix designations:

A BF A L C F D21 E U N

N : Standard cargo bed

U : Non-California, U.S.A.
V : California, U.S.A.
N : Canada

E : Multiport fuel injection system engine

Model

F : 5-speed manual transmission
A : 4-speed automatic transmission

C : Standard
E : XE
F : SE

L : Left-hand drive

A : Regular Cab (2WD) G : King Cab (2WD)
N : Regular Cab (4WD) U : King Cab (4WD)

BF : KA24E engine

A : Regular Cab
B : King Cab

Identification Number

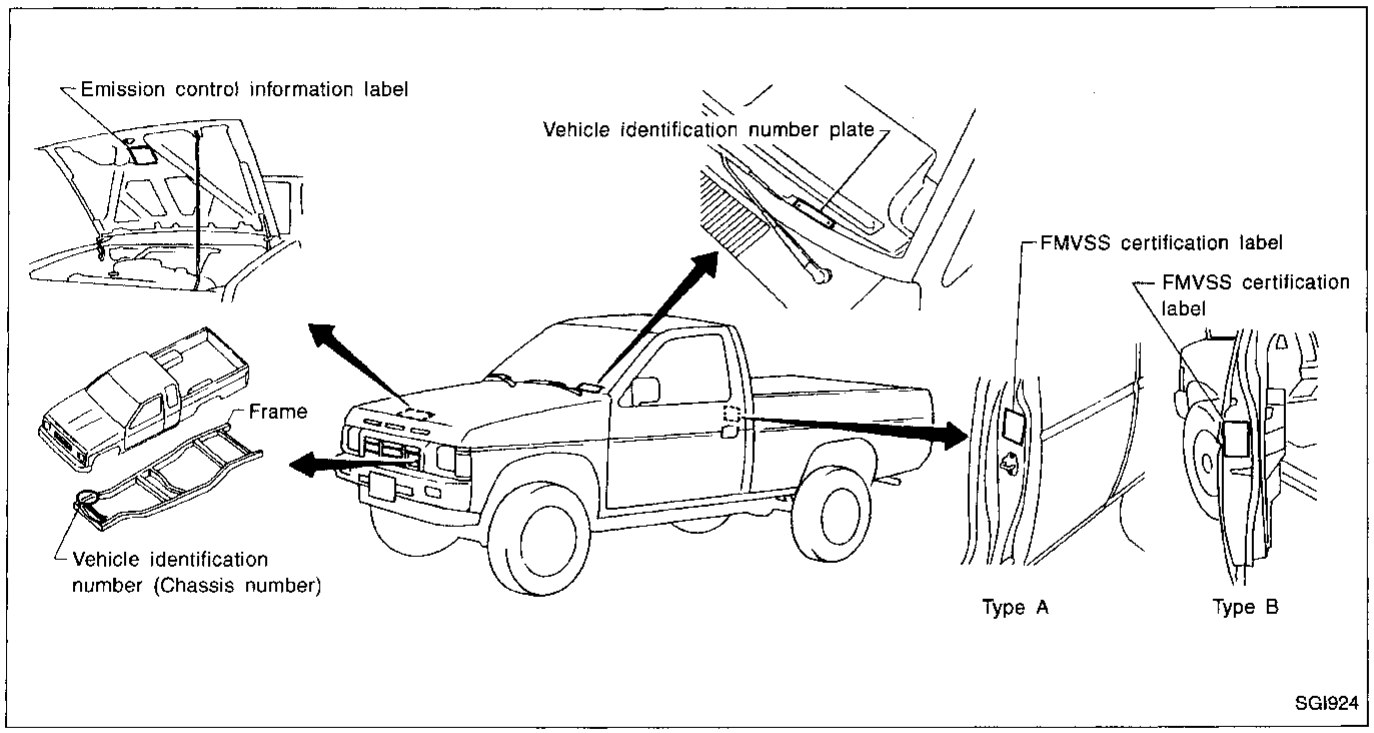

VEHICLE IDENTIFICATION NUMBER ARRANGEMENT

1N6 S D 1 1 S * V C 300001

- 300001: Vehicle serial number
- C: Manufacturing plant
  C : Smyrna, Tennessee
- V: Model year
  V : 1997 model year
- *: Check digit (0 to 9 or X)
  The code for the check digit is determined by mathematical computation.
- S: Gross vehicle weight rating
  S : Standard (2-wheel drive)
  Y : Standard (4-wheel drive)
- 1: Body type
  1 : Standard body
  6 : King Cab
- 1: Model change (0-9)
- D: Vehicle line
  D : Nissan Truck
- S: Engine type
  S : KA24E
- 1N6: Manufacturer
  1N6 : U.S.A. produced truck

Identification Number (Cont'd)

ENGINE SERIAL NUMBER

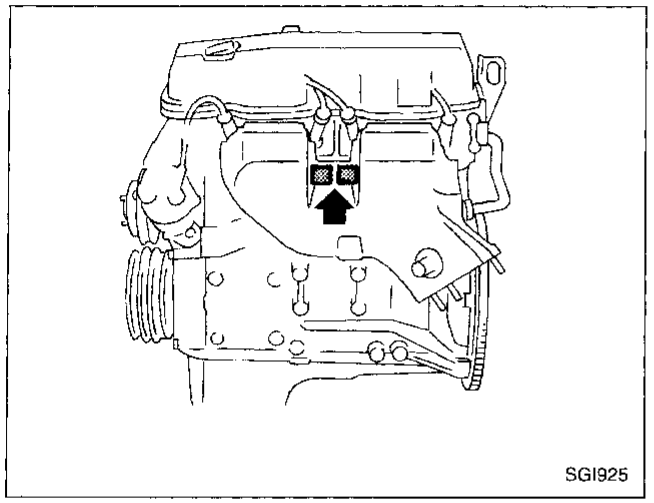

SGI925

TRANSMISSION SERIAL NUMBER

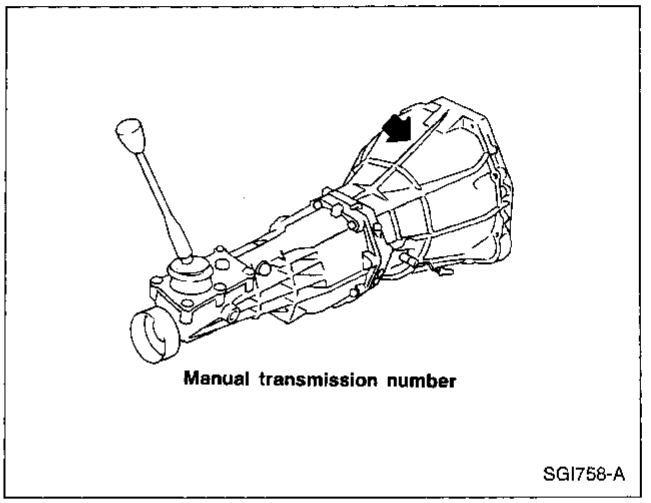

SGI758-A

TRANSMISSION SERIAL NUMBER

RL4R01A

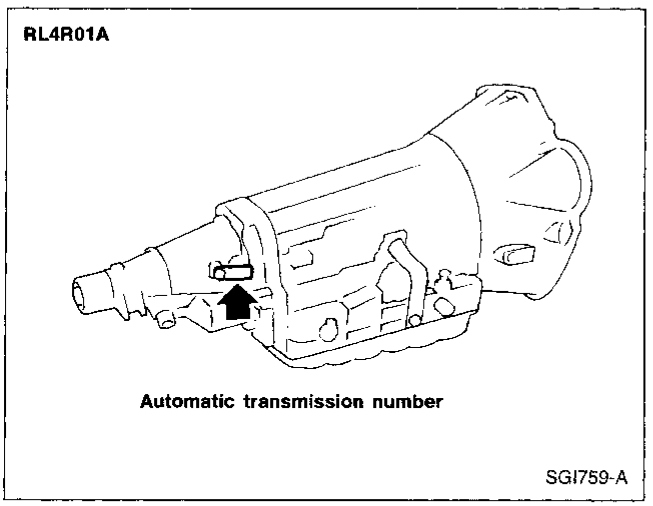

SGI759-A

TRANSFER SERIAL NUMBER

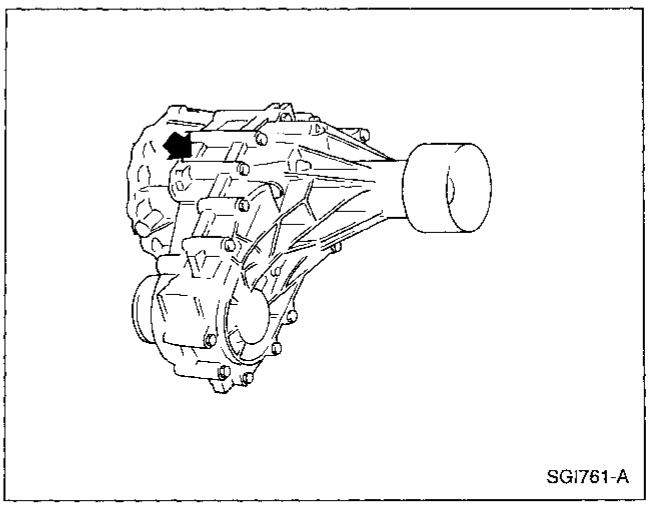

SGI761-A

Dimensions

Unit: mm (in)

		2-wheel drive		4-wheel drive	
		Regular Cab	King Cab	Regular Cab	King Cab
		Standard wheelbase	Long wheelbase	Standard wheelbase	Long wheelbase
Overall length*1		4,435 (174.6)	4,825 (190.0)	4,435 (174.6)	4,825 (190.0)
Overall width		1,650 (65.0)	1,650 (65.0)	1,690 (66.5)	1,690 (66.5)
Overall height		1,575 (62.0)	1,575 (62.0)	1,705 (67.1)	1,705 (67.1)
Front tread*2		1,395 (54.9)	1,395 (54.9)	1,455 (57.3)	1,455 (57.3)
Rear tread*2		1,385 (54.5)	1,385 (54.5)	1,440 (56.7)	1,440 (56.7)
Wheelbase		2,650 (104.3)	2,950 (116.1)	2,650 (104.3)	2,950 (116.1)
Cargo space	Length	1,875 (73.8)	1,895 (74.6)	1,875 (73.8)	1,895 (74.6)
	Width	1,520 (59.8)	1,520 (59.8)	1,520 (59.8)	1,520 (59.8)
	Height	435 (17.1)	435 (17.1)	435 (17.1)	435 (17.1)
Minimum ground clearance		211 (8.3)	211 (8.3)	236 (9.3)	236 (9.3)

*1: On step bumper equipped models, the bumper adds 140 mm (5.5 in) to the overall length.
*2: On 14x6JJ road wheel equipped models, adds 20 mm (0.79 in) to the tread.

Wheels & Tires

	Cab type	Grade	Road wheel/offset mm (in)	Tire	Spare tire size
4x2	Regular	STD	14x5J/40 (1.57)	P195/75R14	T135/70D16 P195/75R14*
	Regular & King	XE	14x5J/40 (1.57) 14x6JJ Aluminum/30 (1.18)*	P195/75R14 P215/70R14*	T135/70D16 P195/75R14* P215/70R14*
	King	SE	14x6JJ Aluminum/30 (1.18)	P215/70R14	T135/70D16
4x4	Regular	XE	15x6JJ/25 (0.98) 15x7JJ Aluminum/25 (0.98)	P235/75R15	P215/75R15* P235/75R15
	King	XE	15x6JJ/25 (0.98) 15x7JJ Aluminum/25 (0.98)	P235/75R15	P235/75R15
	King	SE	15x7JJ Aluminum/25 (0.98)	P235/75R15	P235/75R15

*: Option

WARNING:

a. **Never get under the vehicle while it is supported only by the jack. Always use safety stands to support the frame when you have to get under the vehicle.**
b. **Place wheel chocks at both front and back of the wheels on the ground.**

Pantograph Jack

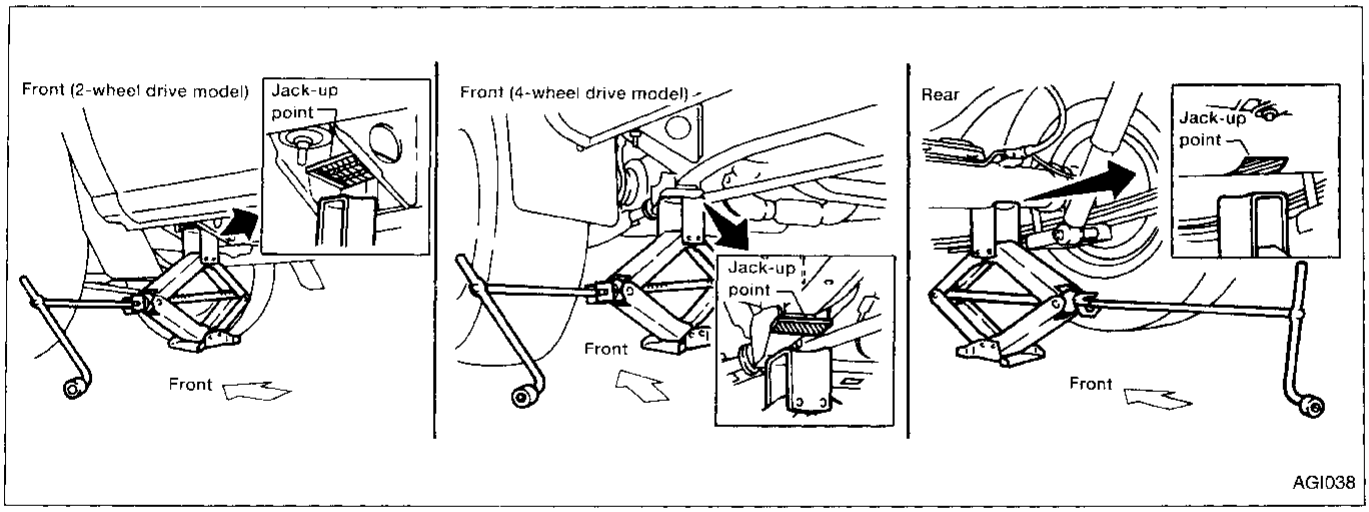

Screw Jack

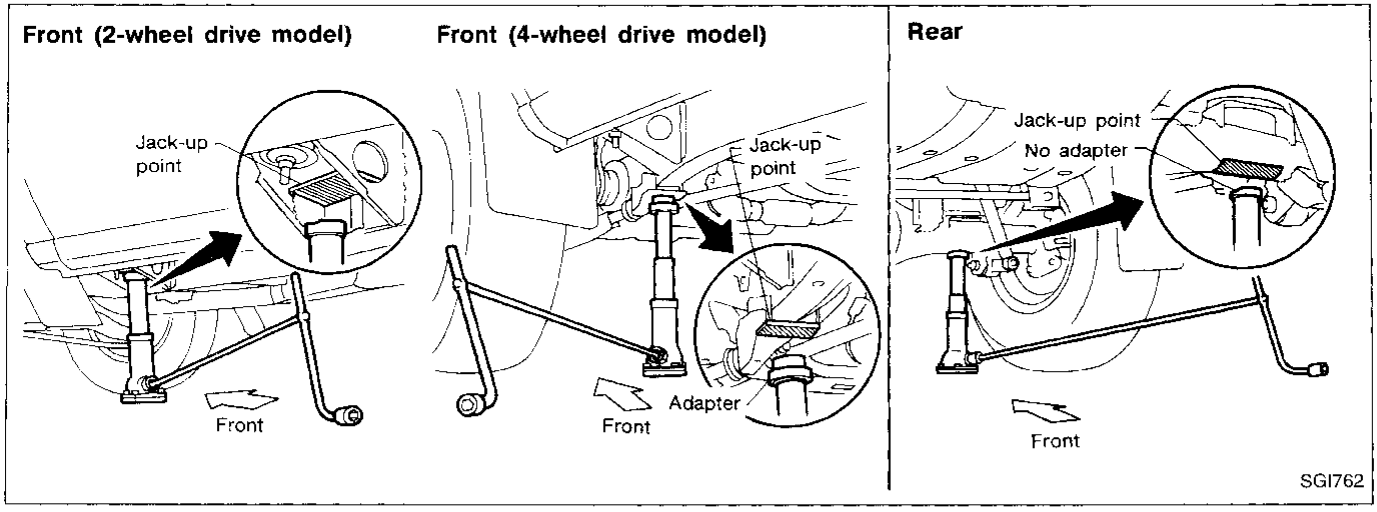

Garage Jack and Safety Stand

CAUTION:
Place a wooden or rubber block between safety stand and vehicle body when the supporting body is flat.

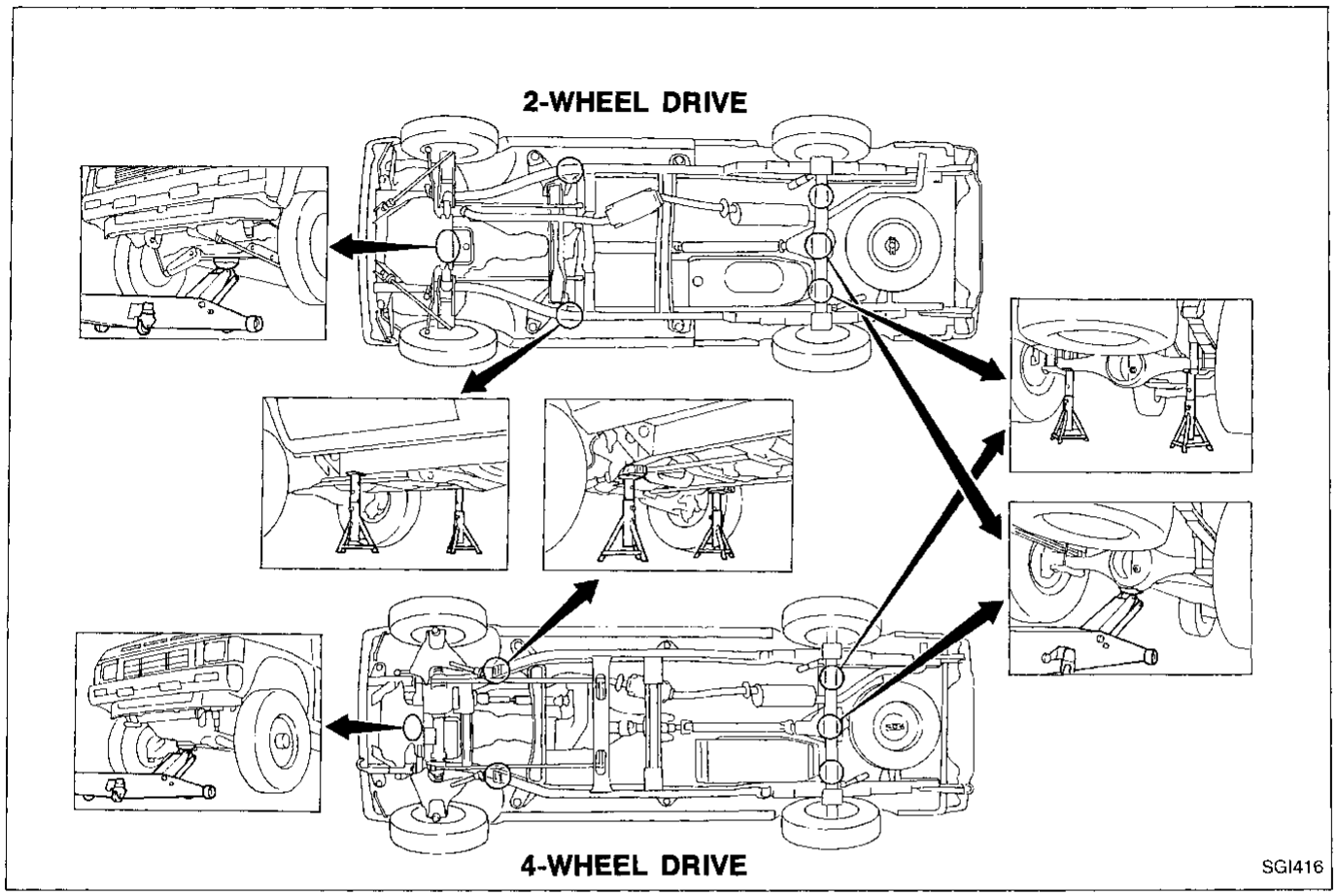

2-pole Lift

WARNING:
When lifting the vehicle, open the lift arms as wide as possible and ensure that the front and rear of the vehicle are well balanced.
When setting the lift arm, do not allow the arm to contact the brake tubes, brake cable or fuel lines.

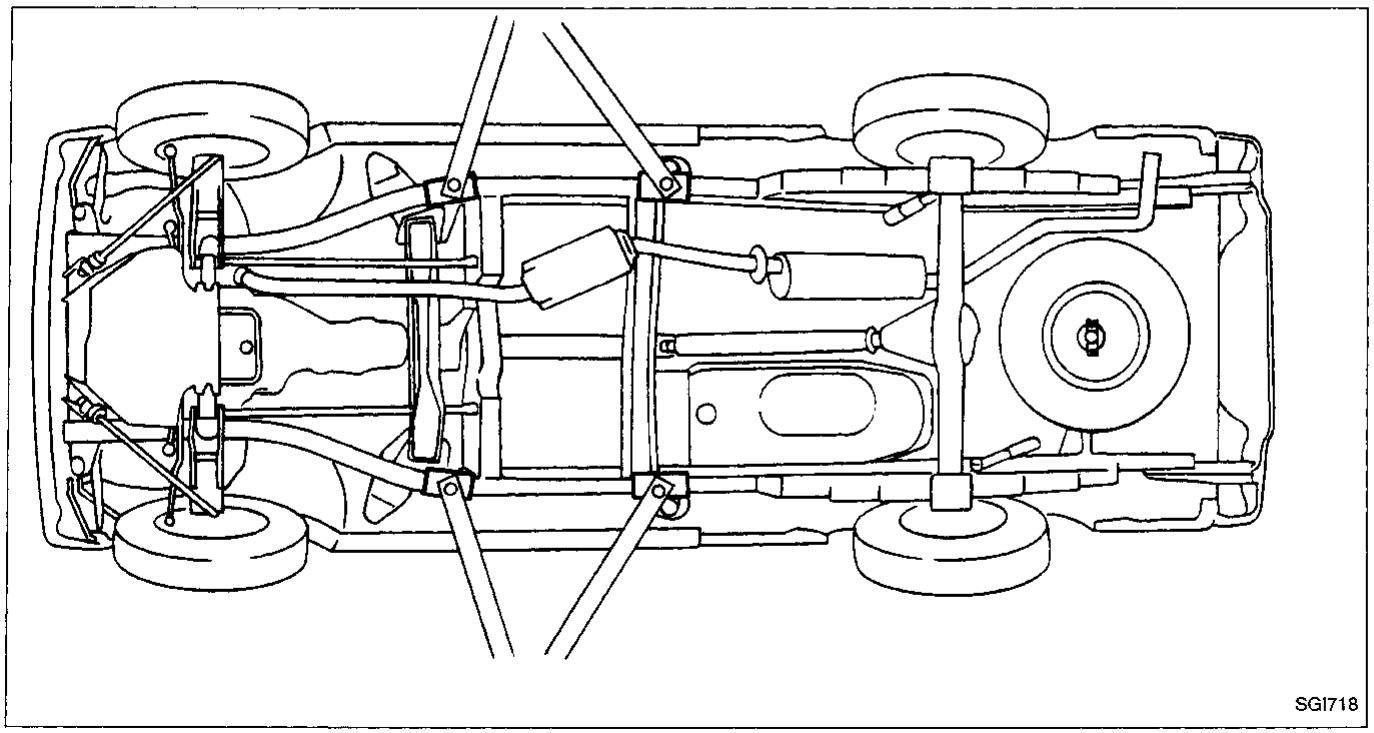

Tow Truck Towing

CAUTION:

- **All applicable state or provincial (in Canada) laws and local laws regarding the towing operation must be obeyed.**
- **It is necessary to use proper towing equipment to avoid possible damage to the vehicle during towing operation.**
  Towing is in accordance with Towing Procedure Manual at dealer.
- **Attach safety chains for all towing.**
- **When towing, make sure that the transmission, steering system and powertrain are in good order. If any unit is damaged, a dolly must be used.**
- **When towing with the front wheels on the ground:**
  Turn the ignition key to the "OFF" position and secure the steering wheel in a straight ahead position with a rope or similar device. Never place the ignition key in the "LOCK" position. This will result in damage to the steering lock mechanism.
- **When towing manual transmission models with the rear wheels on the ground, release the parking brake and move the gearshift lever to neutral position ("N" position).**
- **Never tow vehicle from the rear (i.e., backward) with four wheels on the ground as this may cause serious and expensive damage to the transmission.**
- **For 4-wheel drive model:**
  Set the free-running hubs to the free position. Move the transfer case shift lever into the "2H" position and the transmission shift lever into the neutral ("N") position.

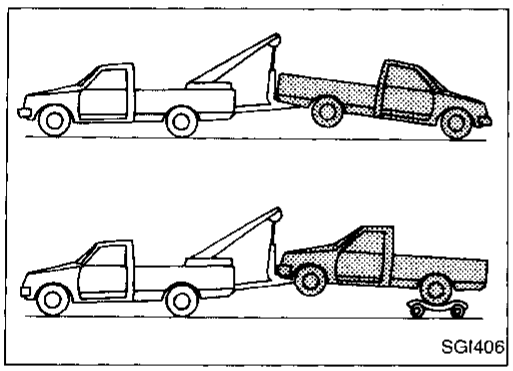

2-WHEEL DRIVE MODELS

NISSAN recommends that vehicle be towed with the driving (rear) wheels off the ground as illustrated.

Towing with four wheels on ground or towing with front wheels raised (With rear wheels on ground)

Observe the following restricted towing speeds and distances.

Automatic transmission model:
Speed: Below 50 km/h (30 MPH)
Distance: Less than 65 km (40 miles)

Manual transmission model:
Speed: Below 95 km/h (60 MPH)
Distance: Less than 800 km (500 miles)

If the speed or distance must necessarily be greater, remove the propeller shaft beforehand to prevent damage to the transmission.

Tow Truck Towing (Cont'd)

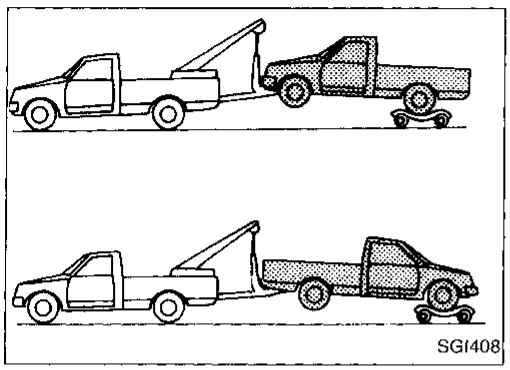

4-WHEEL DRIVE MODELS

NISSAN recommends that a dolly be used as illustrated when towing 4-speed drive models.

Towing with four wheels on ground or towing with front or rear wheels raised

Observe the following restricted towing speeds and distances.

Automatic transmission model:
Speed: Below 50 km/h (30 MPH)
Distance: Less than 65 km (40 miles)
Manual transmission model:
Speed: Below 95 km/h (60 MPH)
Distance: Less than 800 km (500 miles)

If the speed or distance must necessarily be greater, remove the front and rear propeller shafts beforehand to prevent damage to the transmission.

Towing Point

- **Never tow the vehicle using only the towing hooks. To avoid damaging the vehicle body, use proper towing equipment when towing.**
- **Always pull the cable straight out from the vehicle. Never pull on the hook at a sideways angle.**

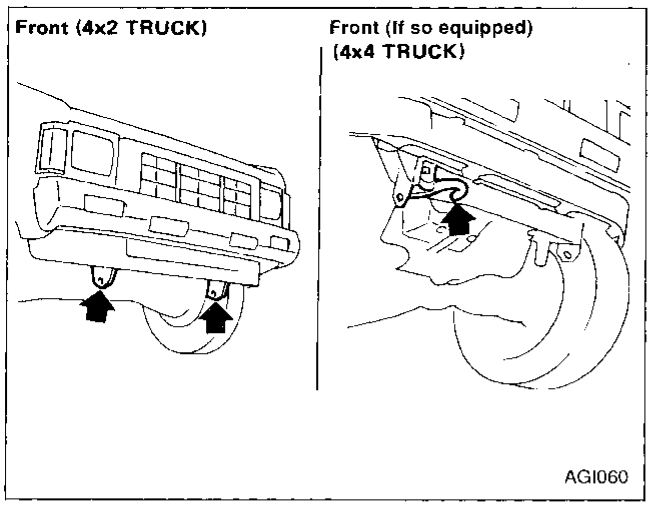

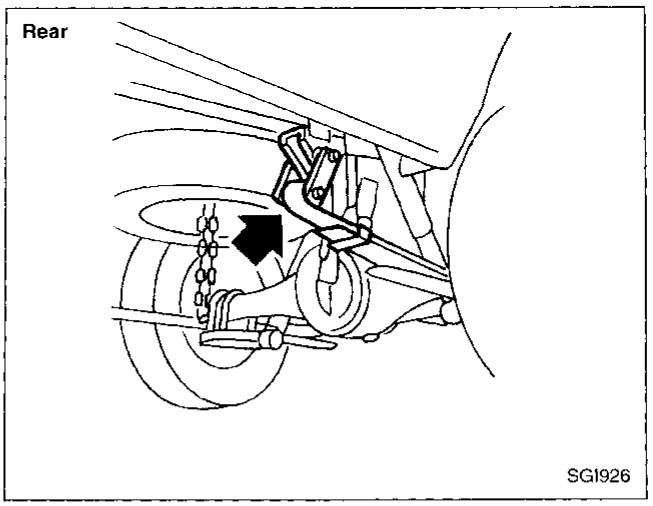

VEHICLE RECOVERY (Freeing a stuck vehicle)

- Tow chains or cables must be attached only to the main structural members of the vehicle.
- Pulling devices should be routed so they do not touch any part of the suspension, steering, brake or cooling systems.
- Always pull the cable straight out from the front or rear of the vehicle. Never pull the vehicle at a sideways angle.
- Pulling devices such as ropes or canvas straps are not recommended for use for vehicle towing or recovery.

TIGHTENING TORQUE OF STANDARD BOLTS

Grade	Bolt size	Bolt diameter* mm	Pitch mm	Tightening torque (Without lubricant)							
				Hexagon head bolt				Hexagon flange bolt			
				N·m	kg-m	ft-lb	in-lb	N·m	kg-m	ft-lb	in-lb
4T	M6	6.0	1.0	5.1	0.52	3.8	45.1	6.1	0.62	4.5	53.8
	M8	8.0	1.25	13	1.3	9	—	15	1.5	11	—
			1.0	13	1.3	9	—	16	1.6	12	—
	M10	10.0	1.5	25	2.5	18	—	29	3.0	22	—
			1.25	25	2.6	19	—	30	3.1	22	—
	M12	12.0	1.75	42	4.3	31	—	51	5.2	38	—
			1.25	46	4.7	34	—	56	5.7	41	—
	M14	14.0	1.5	74	7.5	54	—	88	9.0	65	—
7T	M6	6.0	1.0	8.4	0.86	6.2	74.6	10	1.0	7	87
	M8	8.0	1.25	21	2.1	15	—	25	2.5	18	—
			1.0	22	2.2	16	—	26	2.7	20	—
	M10	10.0	1.5	41	4.2	30	—	48	4.9	35	—
			1.25	43	4.4	32	—	51	5.2	38	—
	M12	12.0	1.75	71	7.2	52	—	84	8.6	62	—
			1.25	77	7.9	57	—	92	9.4	68	—
	M14	14.0	1.5	127	13.0	94	—	147	15.0	108	—
9T	M6	6.0	1.0	12	1.2	9	—	15	1.5	11	—
	M8	8.0	1.25	29	3.0	22	—	35	3.6	26	—
			1.0	31	3.2	23	—	37	3.8	27	—
	M10	10.0	1.5	59	6.0	43	—	70	7.1	51	—
			1.25	62	6.3	46	—	74	7.5	54	—
	M12	12.0	1.75	98	10.0	72	—	118	12.0	87	—
			1.25	108	11.0	80	—	137	14.0	101	—
	M14	14.0	1.5	177	18.0	130	—	206	21.0	152	—

1. **Special parts are excluded.**
2. **This standard is applicable to bolts having the following marks embossed on the bolt head.**

*: Nominal diameter

Grade		Mark
4T	.....	4
7T	.....	7
9T	.....	9

M — Metric screw threads

6 — Nominal diameter of bolt threads (Unit: mm)

SAE J1930 Terminology List

All emission related terms used in this publication in accordance with SAE J1930 are listed. Accordingly, new terms, new acronyms/abbreviations and old terms are listed in the following chart.

***: Not applicable

NEW TERM	NEW ACRONYM / ABBREVIATION	OLD TERM
Air cleaner	ACL	Air cleaner
Barometric pressure	BARO	***
Barometric pressure sensor-BCDD	BAROS-BCDD	BCDD
Camshaft position	CMP	***
Camshaft position sensor	CMPS	Crank angle sensor
Carburetor	CARB	Carburetor
Charge air cooler	CAC	Intercooler
Closed loop	CL	Closed loop
Closed throttle position switch	CTP switch	Idle switch
Clutch pedal position switch	CPP switch	Clutch switch
Continuous fuel injection system	CFI system	***
Continuous trap oxidizer system	CTOX system	***
Crankshaft position	CKP	***
Crankshaft position sensor	CKPS	***
Data link connector	DLC	***
Data link connector for CONSULT	DLC for CONSULT	Diagnostic connector for CONSULT
Diagnostic test mode	DTM	Diagnostic mode
Diagnostic test mode selector	DTM selector	Diagnostic mode selector
Diagnostic test mode I	DTM I	Mode I
Diagnostic test mode II	DTM II	Mode II
Diagnostic trouble code	DTC	Malfunction code
Direct fuel injection system	DFI system	***
Distributor ignition system	DI system	Ignition timing control
Early fuel evaporation-mixture heater	EFE-mixture heater	Mixture heater
Early fuel evaporation system	EFE system	Mixture heater control
Electrically erasable programmable read only memory	EEPROM	***
Electronic ignition system	EI system	Ignition timing control
Engine control	EC	***
Engine control module	ECM	ECCS control unit
Engine coolant temperature	ECT	Engine temperature
Engine coolant temperature sensor	ECTS	Engine temperature sensor
Engine modification	EM	***
Engine speed	RPM	Engine speed
Erasable programmable read only memory	EPROM	***
Evaporative emission canister	EVAP canister or Canister	Canister

SAE J1930 Terminology List (Cont'd)

***: Not applicable

NEW TERM	NEW ACRONYM / ABBREVIATION	OLD TERM
Evaporative emission system	EVAP system	Evaporative emission control system
Exhaust gas recirculation valve	EGR valve	EGR valve
Exhaust gas recirculation control-BPT valve	EGRC-BPT valve	BPT valve
Exhaust gas recirculation control-solenoid valve	EGRC-solenoid valve	EGR control solenoid valve
Exhaust gas recirculation temperature sensor	EGRT sensor	Exhaust gas temperature sensor
EGR temperature sensor		
Flash electrically erasable programmable read only memory	FEEPROM	***
Flash erasable programmable read only memory	FEPROM	***
Flexible fuel sensor	FFS	***
Flexible fuel system	FF system	***
Fuel pressure regulator	***	Pressure regulator
Fuel pressure regulator control solenoid valve	***	PRVR control solenoid valve
Fuel trim	FT	***
Heated oxygen sensor	HO2S	Exhaust gas sensor
Idle air control system	IAC system	Idle speed control
Idle air control valve-air regulator	IACV-air regulator	Air regulator
Idle air control valve-auxiliary air control valve	IACV-AAC valve	Auxiliary air control (AAC) valve
Idle air control valve-FICD solenoid valve	IACV-FICD solenoid valve	FICD solenoid valve
Idle air control valve-idle up control solenoid valve	IACV-idle up control solenoid valve	Idle up control solenoid valve
Idle speed control-FI pot	ISC-FI pot	FI pot
Idle speed control system	ISC system	***
Ignition control	IC	***
Ignition control module	ICM	***
Indirect fuel injection system	IFI system	***
Intake air	IA	Air
Intake air temperature sensor	IAT sensor	Air temperature sensor
Knock	***	Detonation
Knock sensor	KS	Detonation sensor
Malfunction indicator lamp	MIL	Check engine light
Manifold absolute pressure	MAP	***
Manifold absolute pressure sensor	MAPS	***
Manifold differential pressure	MDP	***
Manifold differential pressure sensor	MDPS	***

SAE J1930 Terminology List (Cont'd)

***: Not applicable

NEW TERM	NEW ACRONYM / ABBREVIATION	OLD TERM
Manifold surface temperature	MST	***
Manifold surface temperature sensor	MSTS	***
Manifold vacuum zone	MVZ	***
Manifold vacuum zone sensor	MVZS	***
Mass air flow sensor	MAFS	Air flow meter
Mixture control solenoid valve	MC solenoid valve	Air-fuel ratio control solenoid valve
Multiport fuel injection System	MFI system	Fuel injection control
Neutral position switch	***	Neutral switch
Nonvolatile random access memory	NVRAM	***
On board diagnostic system	OBD system	Self-diagnosis
Open loop	OL	Open loop
Oxidation catalyst	OC	Catalyst
Oxidation catalytic converter system	OC system	***
Oxygen sensor	O2S	Exhaust gas sensor
Park position switch	***	Park switch
Park/neutral position switch	PNP switch	Park/neutral switch
Periodic trap oxidizer system	PTOX system	***
Positive crankcase ventilation	PCV	Positive crankcase ventilation
Positive crankcase ventilation valve	PCV valve	PCV valve
Powertrain control module	PCM	***
Programmable read only memory	PROM	***
Pulsed secondary air injection control solenoid valve	PAIRC solenoid valve	AIV control solenoid valve
Pulsed secondary air injection system	PAIR system	Air induction valve (AIV) control
Pulsed secondary air injection valve	PAIR valve	Air induction valve
Random access memory	RAM	***
Read only memory	ROM	***
Scan tool	ST	***
Secondary air injection pump	AIR pump	***
Secondary air injection system	AIR system	***
Sequential multiport fuel injection system	SFI system	Sequential fuel injection
Service reminder indicator	SRI	***
Simultaneous multiport fuel injection system	***	Simultaneous fuel injection
Smoke puff limiter system	SPL system	***
Supercharger	SC	***
Supercharger bypass	SCB	***
System readiness test	SRT	***
Thermal vacuum valve	TVV	Thermal vacuum valve
Three way catalyst	TWC	Catalyst
Three way catalytic converter system	TWC system	***
Three way+oxidation catalyst	TWC+OC	Catalyst

SAE J1930 Terminology List (Cont'd)

***: Not applicable

NEW TERM	NEW ACRONYM / ABBREVIATION	OLD TERM
Three way+oxidation catalytic converter system	TWC+OC system	***
Throttle body	TB	Throttle chamber SPI body
Throttle body fuel injection system	TBI system	Fuel injection control
Throttle position	TP	Throttle position
Throttle position sensor	TPS	Throttle sensor
Throttle position switch	TP switch	Throttle switch
Torque converter clutch solenoid valve	TCC solenoid valve	Lock-up cancel solenoid Lock-up solenoid
Turbocharger	TC	Turbocharger
Vehicle speed sensor	VSS	Vehicle speed sensor
Volume air flow sensor	VAFS	Air flow meter
Warm up oxidation catalyst	WU-OC	Catalyst
Warm up oxidation catalytic converter system	WU-OC system	***
Warm up three way catalyst	WU-TWC	Catalyst
Warm up three way catalytic converter system	WU-TWC system	***
Wide open throttle position switch	WOTP switch	Full switch

SECTION LC

CONTENTS

PRECAUTIONS AND PREPARATION 2
Supplemental Restraint System (SRS) "AIR BAG" 2
Liquid Gasket Application Procedure 2
Special Service Tools 3
ENGINE LUBRICATION SYSTEM 4
Lubrication Circuit 4
Oil Pressure Check 5
Oil Pump 5
ENGINE COOLING SYSTEM 7
Cooling Circuit 7
System Check 7
Water Pump 8
Thermostat 9
Radiator 11
Cooling Fan 12
Overheating Cause Analysis 13
SERVICE DATA AND SPECIFICATIONS (SDS) 14
Engine Lubrication System 14
Engine Cooling System 14

Supplemental Restraint System (SRS) "AIR BAG"

The Supplemental Restraint System "Air Bag", used along with a seat belt, helps to reduce the risk or severity of injury to the driver in a frontal collision. The Supplemental Restraint System consists of an air bag module (located in the center of the steering wheel), a diagnosis sensor unit, warning lamp, wiring harness, a crash zone sensor (4WD models) and spiral cable. Information necessary to service the system safely is included in the **RS section** of this Service Manual.

WARNING:

- **To avoid rendering the SRS inoperative, which could increase the risk of personal injury or death in the event of a collision which would result in air bag inflation, all maintenance must be performed by an authorized NISSAN dealer.**
- **Improper maintenance, including incorrect removal and installation of the SRS, can lead to personal injury caused by unintentional activation of the system.**
- **Do not use electrical test equipment on any circuit related to the SRS unless instructed to in this Service Manual. SRS wiring harnesses are covered with yellow insulation either just before the harness connectors or for the complete harness, for easy identification.**

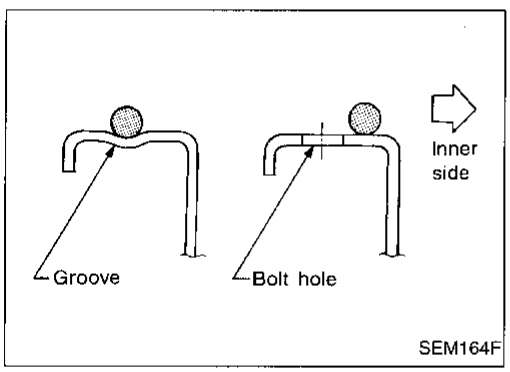

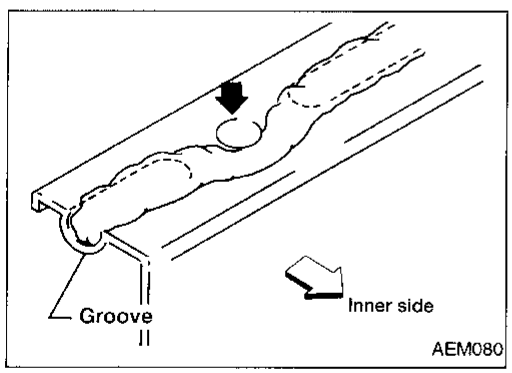

Liquid Gasket Application Procedure

a. Use a scraper to remove all traces of old liquid gasket from mating surfaces and grooves. Also, completely clean any oil from these areas.
b. Apply a continuous bead of liquid gasket to mating surfaces. (Use Genuine Liquid Gasket or equivalent.)
   - For oil pan, be sure liquid gasket diameter is 3.5 to 4.5 mm (0.138 to 0.177 in).
   - For areas except oil pan, be sure liquid gasket diameter is 2.0 to 3.0 mm (0.079 to 0.118 in).
c. Apply liquid gasket around the inner side of bolt holes (unless otherwise specified).
d. Assembly should be done within 5 minutes after coating.
e. Wait at least 30 minutes before refilling engine oil and engine coolant.

Special Service Tools

The actual shapes of Kent-Moore tools may differ from those of special service tools illustrated here.

Tool number (Kent-Moore No.) Tool name	Description	
(J34301-C) Oil pressure gauge set ① (J34301-1) Oil pressure gauge ② (J34301-2) Hoses ③ (J34298) Adapter ④ (J34282-1) Adapter ⑤ (790-301-1230-A) 60° adapter ⑥ (J34301-15) Square socket	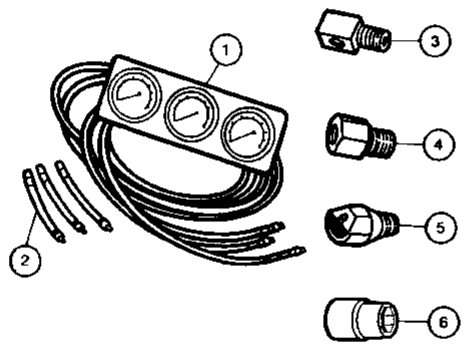 AAT546	Measuring oil pressure **Maximum measuring range:** **1,379 kPa (14 kg/cm², 200 psi)**
EG17650301 (J33984-A) Radiator cap tester adapter	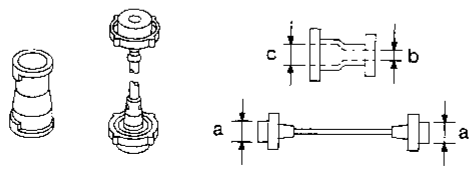 NT564	Adapting radiator cap tester to radiator filler neck **a: 28 (1.10) dia.** **b: 31.4 (1.236) dia.** **c: 41.3 (1.626) dia.** Unit: mm (in)
WS39930000 (—) Tube presser	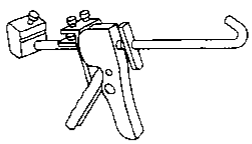 NT052	Pressing the tube of liquid gasket

Lubrication Circuit

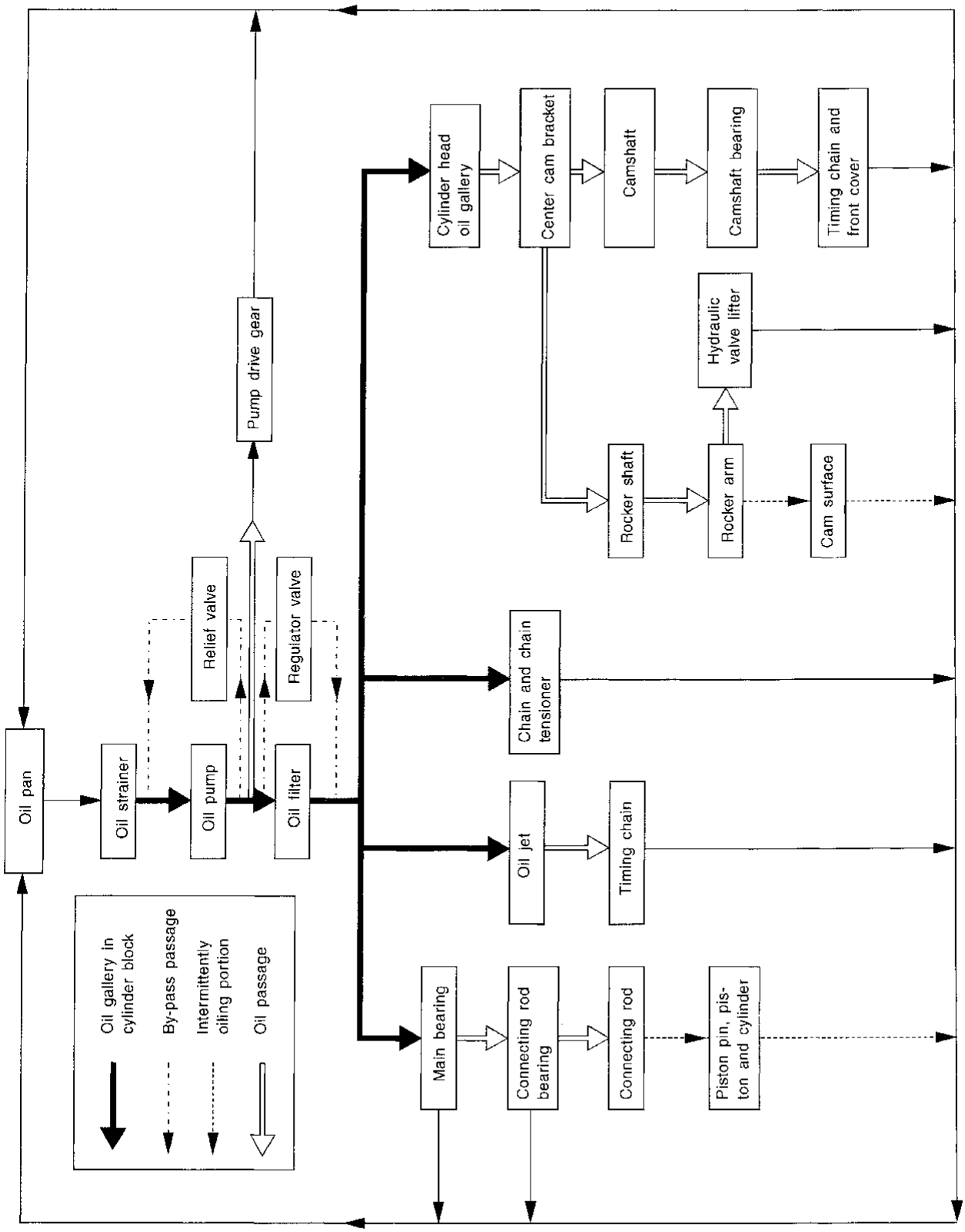

MLC090A

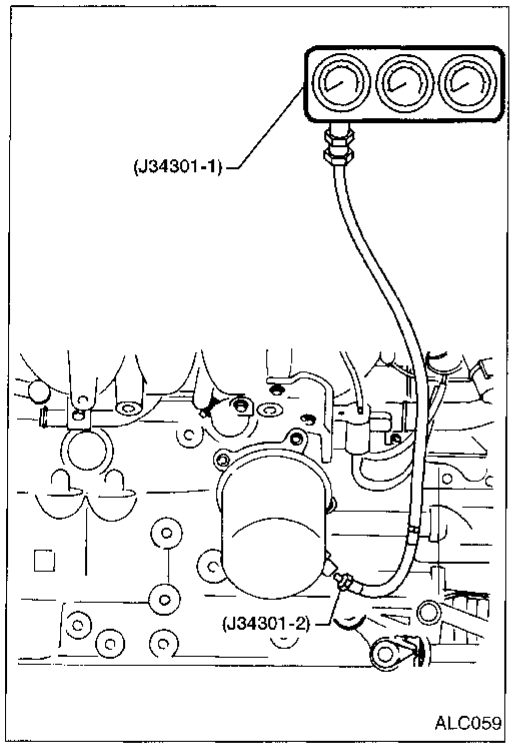

Oil Pressure Check

WARNING:

- **Be careful not to burn yourself, as the engine and oil may be hot.**
- **For M/T models, put gearshift lever in Neutral "N" position. For A/T models, put selector lever in Park "P" position.**

1. Check oil level.
2. Remove oil pressure switch.
3. Install pressure gauge.
4. Start engine and warm it up to normal operating temperature.
5. Check oil pressure with engine running under no-load.

Engine speed rpm	Approximate discharge pressure kPa (kg/cm^2, psi)
Idle speed	More than 78 (0.8, 11)
3,000	412 - 481 (4.2 - 4.9, 60 - 70)

- **If difference is extreme, check oil passage and oil pump for oil leaks.**

6. Install oil pressure switch with sealant.

Oil Pump

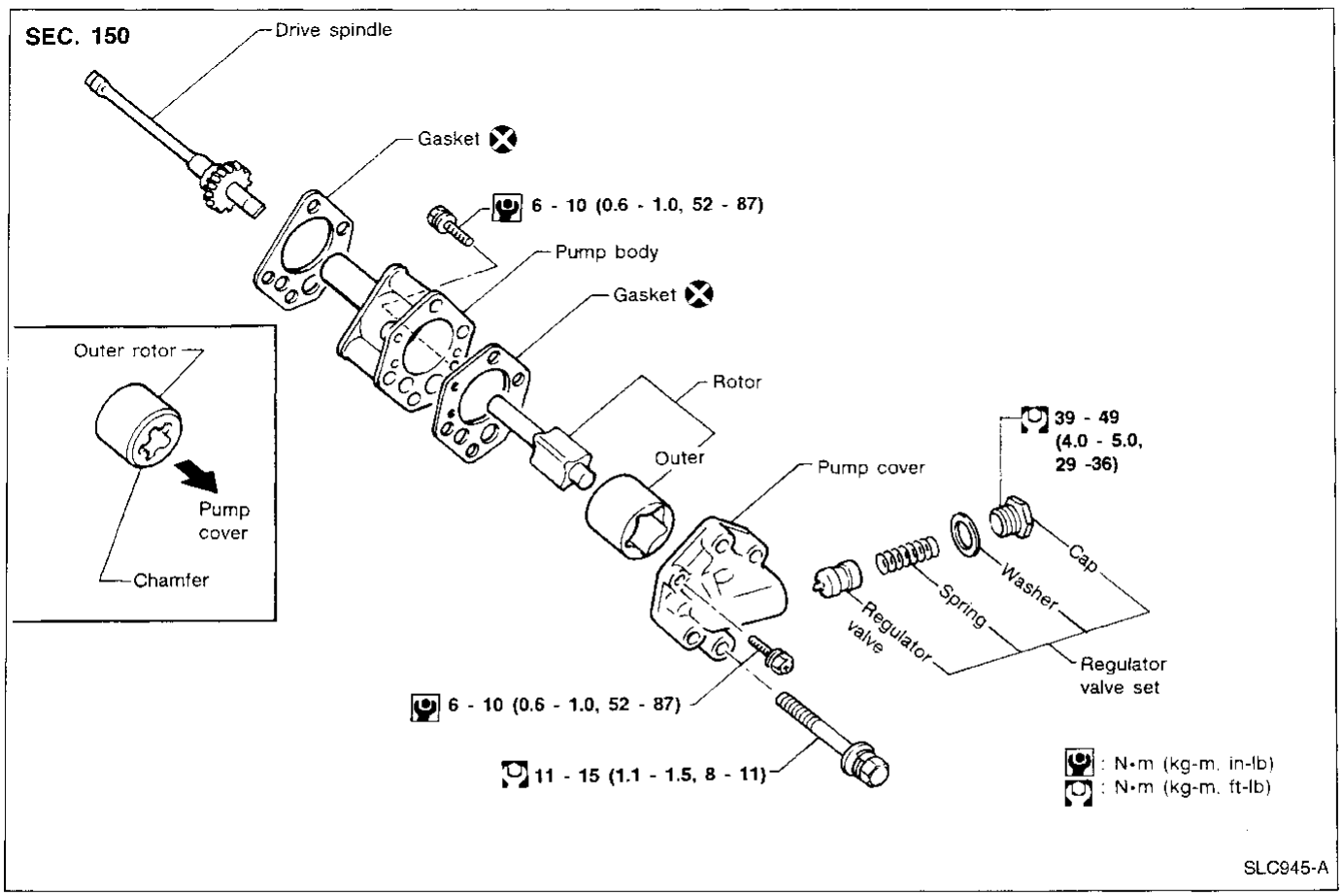

Oil Pump (Cont'd)

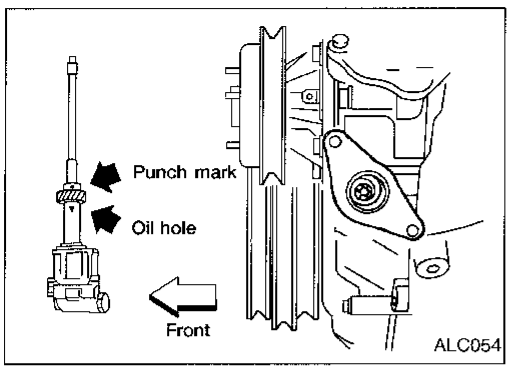

- **Always replace with new oil seal and gasket.**
- **When removing oil pump, turn crankshaft so that No. 1 piston is at TDC on its compression stroke.**
- **When installing oil pump, apply engine oil to gears, then align punchmark on drive spindle and oil hole on oil pump.**

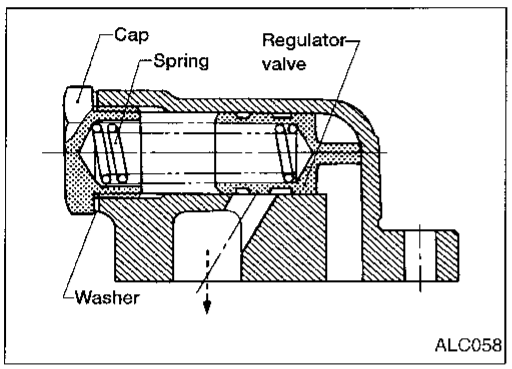

REGULATOR VALVE INSPECTION

1. Visually inspect components for wear and damage.
2. Check oil pressure regulator valve sliding surface and valve spring.
3. Coat regulator valve with engine oil. Check that it falls smoothly into the valve hole by its own weight.

- **Replace regulator valve set or oil pump assembly if damaged.**

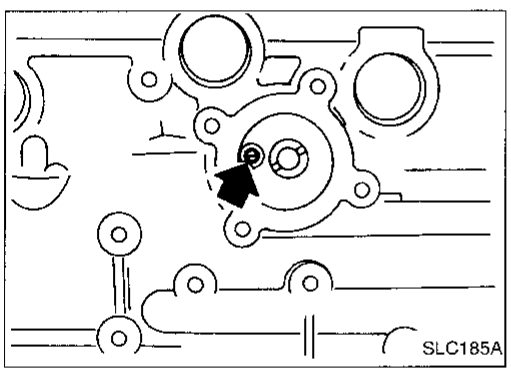

OIL PRESSURE RELIEF VALVE INSPECTION

Inspect oil pressure relief valve for movement, cracks and breaks by pushing the ball. If replacement is necessary, remove valve by prying it out with a suitable tool.
Install a new valve by tapping it in place.

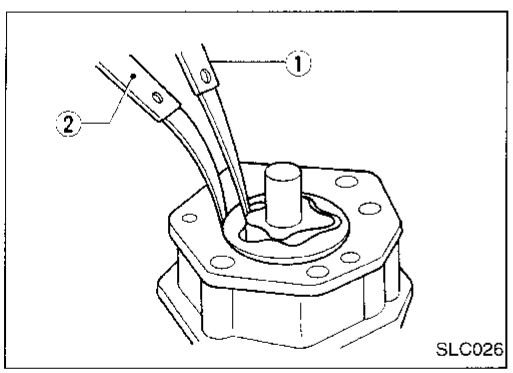

OIL PUMP INSPECTION

Use a feeler gauge to check the following clearances.

Standard clearance:

Unit: mm (in)

Rotor tip clearance ①	Less than 0.12 (0.0047)
Outer rotor to body clearance ②	0.15 - 0.21 (0.0059 - 0.0083)
Side clearance (with gasket) ③	0.04 - 0.08 (0.0016 - 0.0031)

- **If the tip clearance (①) exceeds the limit, replace gear set.**
- **If body to gear clearances (②, ③) exceed the limit, replace oil pump assembly.**

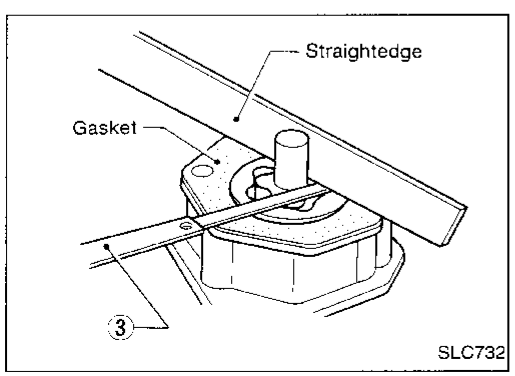

Cooling Circuit

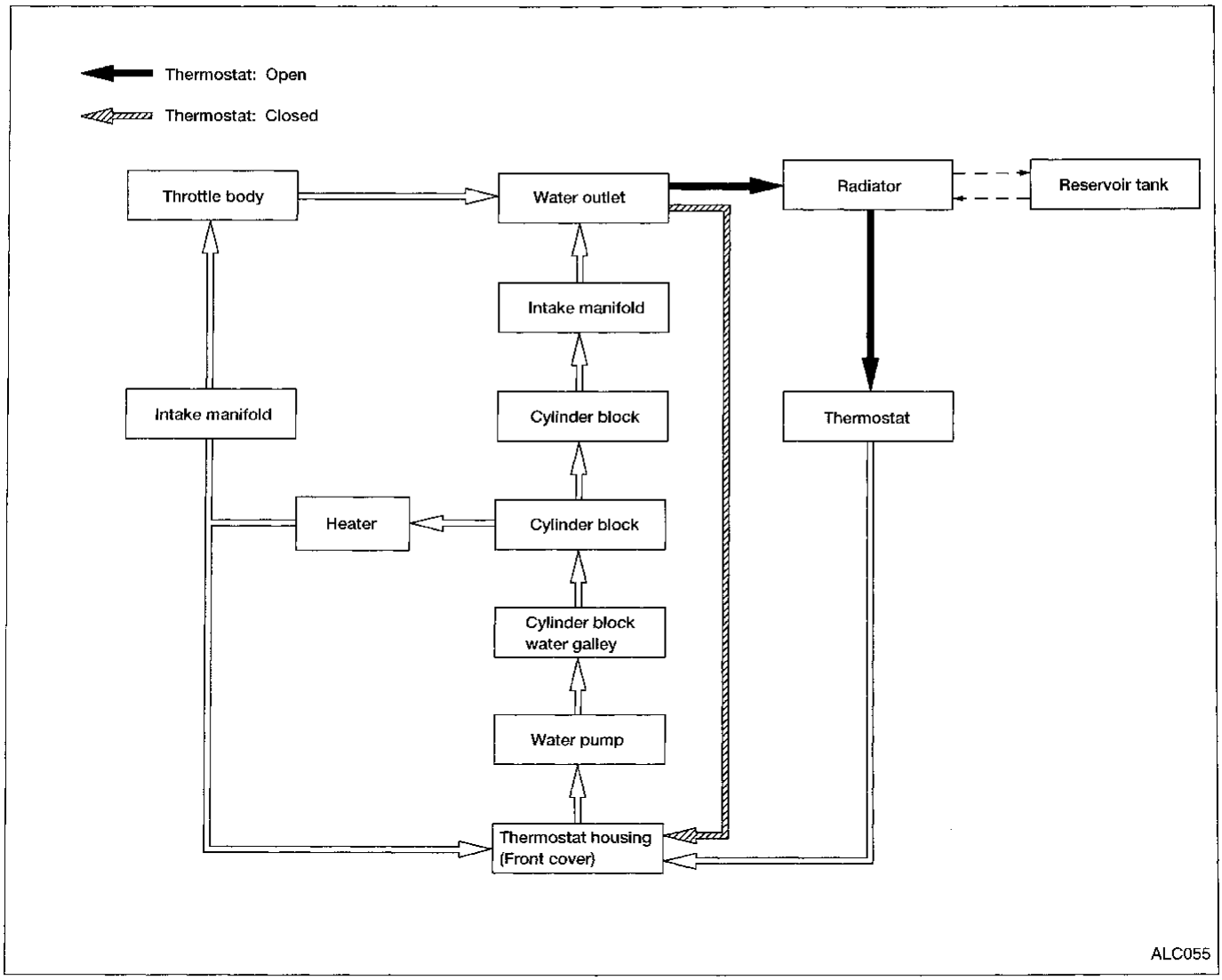

System Check

WARNING:
Never remove the radiator cap when the engine is hot. Serious burns could occur from high pressure coolant escaping from the radiator.
Wrap a thick cloth around the radiator cap. Slowly turn it a quarter turn to allow built up pressure to escape. Carefully remove the radiator cap by turning it all the way.

CHECKING COOLING SYSTEM HOSES

Check hoses for the following:

- Improper attachment
- Leaks
- Cracks
- Damage
- Chafing
- Deterioration

System Check (Cont'd)

CHECKING COOLING SYSTEM FOR LEAKS

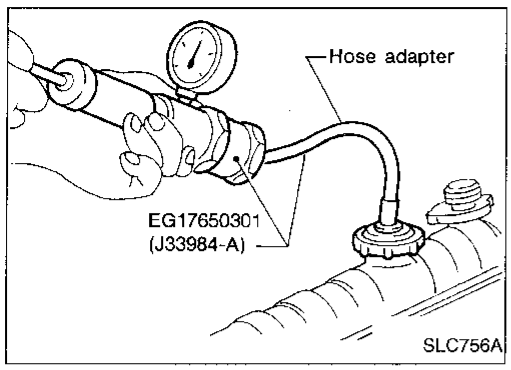

To check for leakage, apply pressure to the cooling system with a radiator cap tester.

Testing pressure:
157 kPa (1.6 kg/cm^2, 23 psi)

CAUTION:
Higher pressure than specified may cause radiator damage.

CHECKING RADIATOR CAP

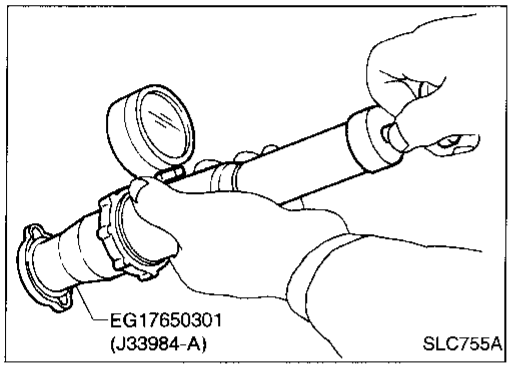

To check radiator cap, apply pressure to radiator cap with a radiator cap tester.

Radiator cap relief pressure:
Standard
78 - 98 kPa (0.8 - 1.0 kg/cm^2, 11 - 14 psi)
Limit
59 - 98 kPa (0.6 - 1.0 kg/cm^2, 9 - 14 psi)

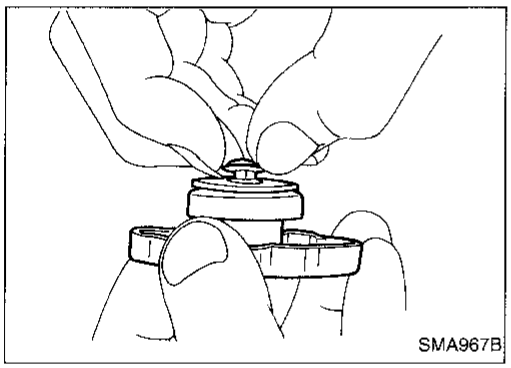

Pull the negative pressure valve to open it.
Check that it closes completely when released.

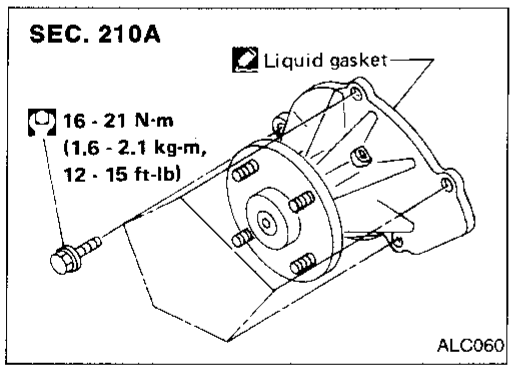

Water Pump

CAUTION:

- **When removing water pump assembly, be careful not to get coolant on drive belts.**
- **Water pump cannot be disassembled and should be replaced as a unit.**
- **After installing water pump, connect hose and clamp securely, then check for leaks using radiator cap tester.**

REMOVAL

1. Drain coolant from engine.
   Refer to MA section ("Changing Engine Coolant", "ENGINE MAINTENANCE").
2. Remove fan coupling with fan.
3. Remove power steering pump drive belt, generator drive belt and A/C compressor drive belt.
4. Remove water pump.

Water Pump (Cont'd)

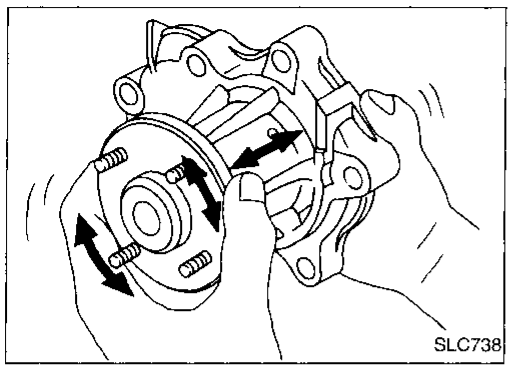

INSPECTION

- Check body assembly for rust or corrosion.
- Check for rough operation due to excessive end play.

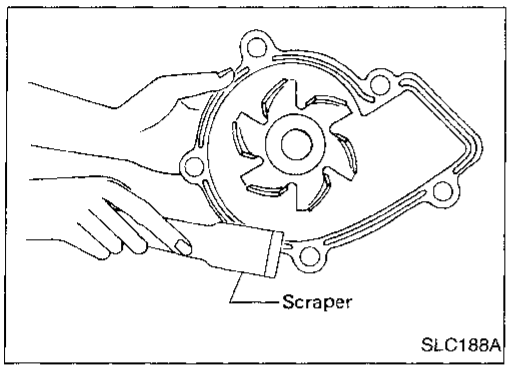

INSTALLATION

1. Use a scraper to remove liquid gasket from water pump.
- **Also remove traces of liquid gasket from mating surface of cylinder block.**

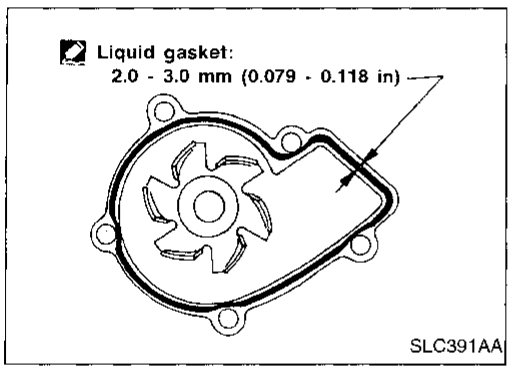

2. Apply a continuous bead of liquid gasket to mating surface of water pump.
- **Use Genuine Liquid Gasket or equivalent.**

When filling radiator with coolant, refer to MA section ("Changing Engine Coolant", "ENGINE MAINTENANCE").
When installing drive belts, refer to MA section ("Checking Drive Belts").

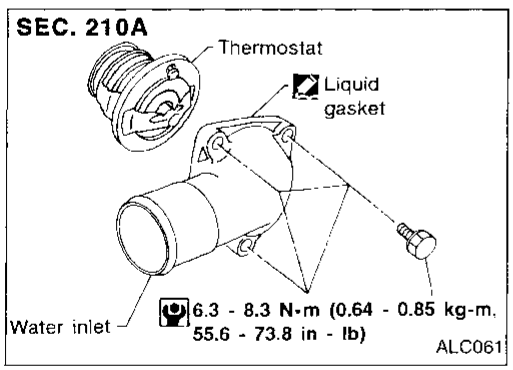

Thermostat

- **Be careful not to spill coolant over engine compartment. Use a rag to absorb coolant.**

REMOVAL

1. Drain coolant from engine. Refer to MA section ("Changing Engine Coolant", "ENGINE MAINTENANCE").
2. Remove air cleaner and air duct assembly.
3. Remove water hose from water inlet housing.
4. Remove water inlet housing, then take out thermostat.

Thermostat (Cont'd)

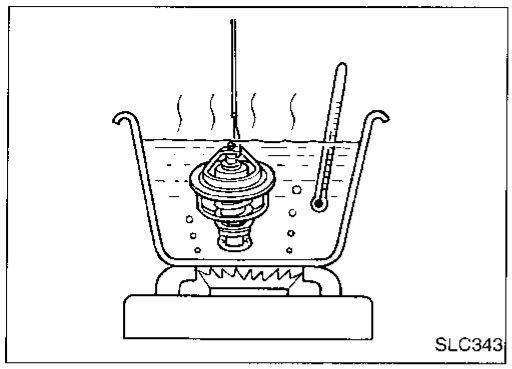

INSPECTION

1. Check valve seating condition at normal room temperature. It should seat tightly.
2. Check valve opening temperature and valve lift.

Valve opening temperature	°C (°F)	76.5 (170)
Valve lift	mm/°C (in/°F)	More than 8/90 (0.31/194)

3. Then check if valve closes at 5°C (9°F) below valve opening temperature.

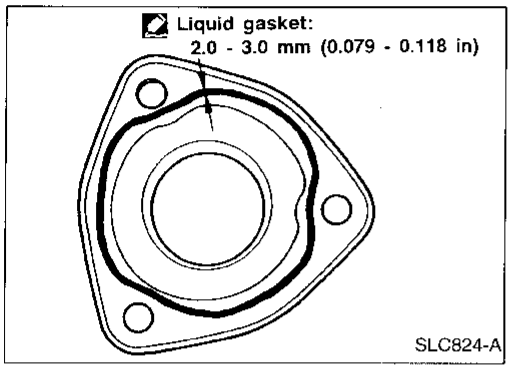

INSTALLATION

1. Use a scraper to remove old liquid gasket from water inlet.
- **Also remove traces of liquid gasket from mating surface of front cover.**
2. Apply a continuous bead of liquid gasket to mating surface of water inlet.
- **Use Genuine Liquid Gasket or equivalent.**

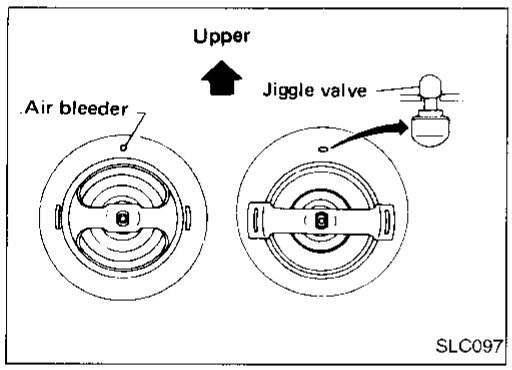

3. Install thermostat with jiggle valve or air bleeder at upper side.
4. Install water inlet housing.
5. Install water hose to water inlet housing.
6. Install air cleaner and air duct assembly.
7. Refill engine coolant. Refer to MA section ("Changing Engine Coolant", "ENGINE MAINTENANCE").
- **After installation, run engine for a few minutes, and check for leaks.**

Radiator

REMOVAL AND INSTALLATION

1. Drain coolant from radiator. Refer to MA section ("Changing Engine Coolant", "ENGINE MAINTENANCE").
2. Disconnect upper and lower radiator hoses.
3. Remove air cleaner and air duct assembly.
4. Remove fan coupling with fan.
5. Remove lower radiator shroud.
6. Remove radiator shroud.
7. Remove A/T oil cooler hoses (A/T models only).
8. Disconnect coolant reservoir hose.
9. Remove radiator.
10. After replacing radiator, install all parts in reverse order of removal.
11. Refill engine coolant. Refer to MA section ("Changing Engine Coolant", "ENGINE MAINTENANCE").

- **After installation, run engine for a few minutes, and check for leaks.**

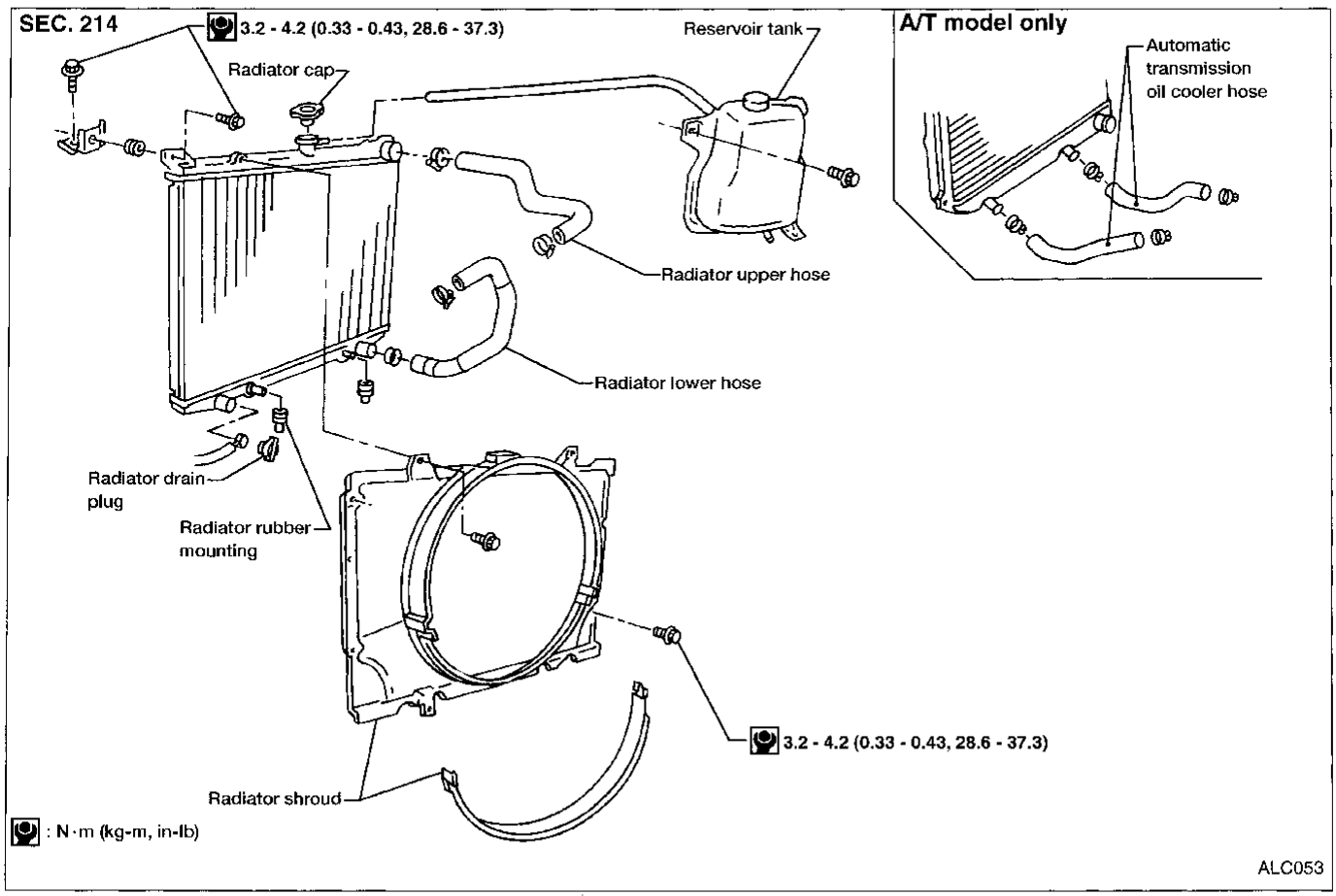

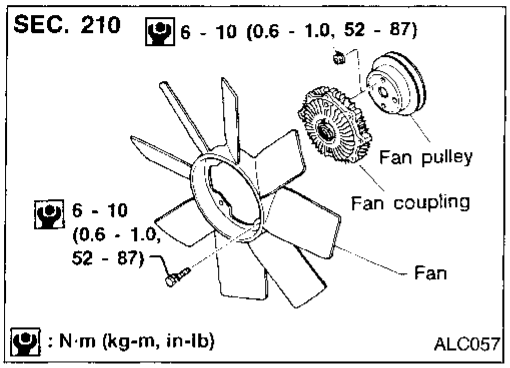

Cooling Fan

DISASSEMBLY AND ASSEMBLY

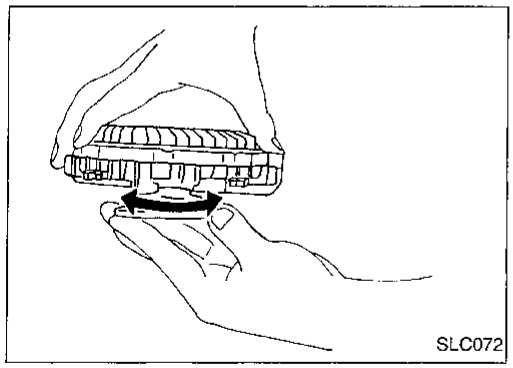

INSPECTION

Check fan coupling for rough operation, oil leakage and bent bimetal.

Overheating Cause Analysis

	Symptom		Check items	
Cooling system parts malfunction	Poor heat transfer	Water pump malfunction	Worn or loose drive belt	—
		Thermostat stuck closed	—	
		Damaged fins	Dust contamination or paper clogging	
			Mechanical damage	
		Clogged radiator cooling tube	Excess foreign material (rust, dirt, sand, etc.)	
	Reduced air flow	Cooling fan does not operate	—	—
		Fan coupling does not operate		
		High resistance to fan rotation		
		Damaged fan blades		
	Damaged radiator shroud	—	—	—
	Improper coolant mixture ratio	—	—	—
	Poor coolant quality	—	—	—
	Insufficient coolant	Coolant leaks	Cooling hose	Loose clamp
				Cracked hose
			Water pump	Poor sealing
			Radiator cap	Loose
				Poor sealing
			Radiator	O-ring for damage, deterioration or improper fitting
				Cracked radiator tank
				Cracked radiator core
			Reservoir tank	Cracked reservoir tank
		Overflowing reservoir tank	Exhaust gas leaks into cooling system	Cylinder head deterioration
				Cylinder head gasket deterioration
Except cooling system parts malfunction	—	Overload on engine	Abusive driving	High engine rpm under no load
				Driving in low gear for extended time
				Driving at extremely high speed
			Powertrain system malfunction	—
			Installed improper size wheels and tires	
			Dragging brakes	
			Improper ignition timing	
	Blocked or restricted air flow	Blocked bumper	—	—
		Blocked radiator grille	Installed truck brassiere	
			Mud contamination or paper clogging	
		Blocked radiator	—	
		Blocked condenser	—	
		Installed large fog lamp		

Engine Lubrication System

Oil pressure check

Engine speed rpm	Approximate discharge pressure kPa (kg/cm^2, psi)
Idle speed	More than 78 (0.8, 11)
3,000	412 - 481 (4.2 - 4.9, 60 - 70)

Oil pump

Unit: mm (in)

Rotor tip clearance	Less than 0.12 (0.0047)
Outer rotor to body clearance	0.15 - 0.21 (0.0059 - 0.0083)
Side clearance (with gasket)	0.04 - 0.08 (0.0016 - 0.0031)

Engine Cooling System

Thermostat

Valve opening temperature	°C (°F)	76.5 (170)
Valve lift	mm/°C (in/°F)	More than 8/90 (0.31/194)

Radiator

Unit: kPa (kg/cm^2, psi)

Cap relief pressure	Standard	78 - 98 (0.8 - 1.0, 11 - 14)
	Limit	59 - 98 (0.6 - 1.0, 9 - 14)
Leakage test pressure		157 (1.6, 23)

SECTION EC

CONTENTS

DIAGNOSTIC TROUBLE CODE INDEX 2
Alphabetical & P No. Index for DTC 2
PRECAUTIONS AND PREPARATION 4
ENGINE AND EMISSION CONTROL OVERALL SYSTEM 9
Circuit Diagram 9
System Diagram 10
ECCS Component Parts Location 11
Vacuum Hose Drawing 13
System Chart 14
ENGINE AND EMISSION BASIC CONTROL SYSTEM DESCRIPTION 15
Multiport Fuel Injection (MFI) System 15
Distributor Ignition (DI) System 17
Air Conditioning Cut Control 18
Fuel Cut Control (at no load & high engine speed) 19
EVAPORATIVE EMISSION SYSTEM 20
Description 20
Inspection 20
Evaporative Emission Line Drawing 22
POSITIVE CRANKCASE VENTILATION 24
Description 24
Inspection 24
BASIC SERVICE PROCEDURE 25
Fuel Pressure Release 25
Fuel Pressure Check 25
Injector Removal and Installation 26
Fast Idle Cam (FIC) Inspection and Adjustment 27
Idle Speed/Ignition Timing/Idle Mixture Ratio Adjustment 28
ON BOARD DIAGNOSTIC SYSTEM DESCRIPTION 34
Introduction 34
Two Trip Detection Logic 34
Emission-related Diagnostic Information 35
Malfunction Indicator Lamp (MIL) 45
OBD System Operation Chart 48
CONSULT 53
Generic Scan Tool (GST) 66
TROUBLE DIAGNOSIS — Introduction 68
Introduction 68
Diagnostic Worksheet 68
TROUBLE DIAGNOSIS — Work Flow 70
Work Flow 70
Description for Work Flow 71
TROUBLE DIAGNOSIS — Basic Inspection 72
Basic Inspection 72
TROUBLE DIAGNOSIS — General Description 75
Diagnostic Trouble Code (DTC) Inspection Priority Chart 75
Fail-Safe Chart 76
Symptom Matrix Chart 77
CONSULT Reference Value in Data Monitor Mode 79
Major Sensor Reference Graph in Data Monitor Mode 81
ECM Terminals and Reference Value 83
TROUBLE DIAGNOSIS FOR POWER SUPPLY 89
Main Power Supply and Ground Circuit 89
TROUBLE DIAGNOSIS FOR DTC P0100 93
Mass Air Flow Sensor (MAFS) 93
TROUBLE DIAGNOSIS FOR DTC P0105 100
Absolute Pressure Sensor 100
TROUBLE DIAGNOSIS FOR DTC P0110 107
Intake Air Temperature Sensor 107
TROUBLE DIAGNOSIS FOR DTC P0115 113
Engine Coolant Temperature Sensor (ECTS) 113
TROUBLE DIAGNOSIS FOR DTC P0120 118
Throttle Position Sensor 118
TROUBLE DIAGNOSIS FOR DTC P0125 124
Engine Coolant Temperature (ECT) Sensor 124
TROUBLE DIAGNOSIS FOR DTC P0130 129
Front Heated Oxygen Sensor (Front HO2S) 129
TROUBLE DIAGNOSIS FOR DTC P0130 134
Closed Loop Control 134
TROUBLE DIAGNOSIS FOR DTC P0135 135
Front Heated Oxygen Sensor Heater 135
TROUBLE DIAGNOSIS FOR DTC P0136 139
Rear Heated Oxygen Sensor (Rear HO2S) 139

CONTENTS (Cont'd.)

TROUBLE DIAGNOSIS FOR DTC P0141 143
Rear Heated Oxygen Sensor Heater 143
TROUBLE DIAGNOSIS FOR DTC P0171 148
Fuel Injection System Function (Lean side) 148
TROUBLE DIAGNOSIS FOR DTC P0172 153
Fuel Injection System Function (Rich side) 153
TROUBLE DIAGNOSIS FOR DTC P0180 158
Tank Fuel Temperature Sensor 158
TROUBLE DIAGNOSIS FOR DTC P0300 - P0304 162
No. 4 - 1 Cylinder Misfire, Multiple Cylinder Misfire 162
TROUBLE DIAGNOSIS FOR DTC P0335 166
Crankshaft Position Sensor (CKPS) (OBD) 166
TROUBLE DIAGNOSIS FOR DTC P0340 171
Camshaft Position Sensor (CMPS) 171
TROUBLE DIAGNOSIS FOR DTC P0400 176
EGR Function 176
TROUBLE DIAGNOSIS FOR DTC P0402 184
EGRC-BPT Valve Function 184
TROUBLE DIAGNOSIS FOR DTC P0420 186
Three Way Catalyst Function 186
TROUBLE DIAGNOSIS FOR DTC P0440 189
Evaporative Emission (EVAP) Control System (Small Leak) 189
TROUBLE DIAGNOSIS FOR DTC P0443 199
Evaporative Emission (EVAP) Canister Purge Control Valve/Solenoid Valve 199
TROUBLE DIAGNOSIS FOR DTC P0446 207
Evaporative Emission (EVAP) Canister Vent Control Valve 207
TROUBLE DIAGNOSIS FOR DTC P0450 212
Evaporative Emission (EVAP) Control System Pressure Sensor 212
TROUBLE DIAGNOSIS FOR DTC P0500 217
Vehicle Speed Sensor (VSS) 217
TROUBLE DIAGNOSIS FOR DTC P0505 221
Idle Air Control Valve (IACV) — Auxiliary Air Control (AAC) Valve 221
TROUBLE DIAGNOSIS FOR DTC P0510 226
Closed Throttle Position Switch 226
TROUBLE DIAGNOSIS FOR DTC P0605 230
Engine Control Module (ECM)-ECCS Control Module 230
TROUBLE DIAGNOSIS FOR DTC P0705 232
Park/Neutral Position Switch 232
TROUBLE DIAGNOSIS FOR DTC P1105 237
Manifold Absolute Pressure (MAP)/Barometric Pressure (BARO) Switch Solenoid Valve 237
TROUBLE DIAGNOSIS FOR DTC P1130 243
Swirl Control Valve Control Solenoid Valve 243
TROUBLE DIAGNOSIS FOR DTC P1165 251
Swirl Control Valve Control Vacuum Check Switch 251
TROUBLE DIAGNOSIS FOR DTC P1320 256
Ignition Signal 256
TROUBLE DIAGNOSIS FOR DTC P1336 262
Crankshaft Position Sensor (CKPS) (OBD) (COG) 262
TROUBLE DIAGNOSIS FOR DTC P1400 267
EGRC-Solenoid Valve 267
TROUBLE DIAGNOSIS FOR DTC P1401 271
EGR Temperature Sensor 271
TROUBLE DIAGNOSIS FOR DTC P1441 276
Vacuum Cut Valve Bypass Valve 276
TROUBLE DIAGNOSIS FOR DTC P1445 281
Evaporative Emission (EVAP) Canister Purge Volume Control Valve 281
TROUBLE DIAGNOSIS FOR DTC P1447 288
Evaporative Emission (EVAP) Control System Purge Flow Monitoring 288
TROUBLE DIAGNOSIS FOR DTC P1550 295
Torque Converter Clutch Solenoid Valve 295
TROUBLE DIAGNOSIS FOR DTC P1900 300
Overheat 300
TROUBLE DIAGNOSIS FOR NON-DETECTABLE ITEMS 303
Injector 303
Start Signal 306
Fuel Pump 309
Power Steering Oil Pressure Switch 313
IACV-FICD Solenoid Valve 317
MIL & Data Link Connectors 321
SERVICE DATA AND SPECIFICATIONS (SDS) 323
General Specifications 323
Inspection and Adjustment 323

When you read wiring diagrams:
- **Read GI section, "HOW TO READ WIRING DIAGRAMS".**
- **See EL section, "POWER SUPPLY ROUTING" for power distribution circuit.**

When you perform trouble diagnoses, read GI section, "HOW TO FOLLOW FLOW CHART IN TROUBLE DIAGNOSES" and "HOW TO PERFORM EFFICIENT DIAGNOSIS FOR AN ELECTRICAL INCIDENT".

Alphabetical & P No. Index for DTC

ALPHABETICAL INDEX FOR DTC

Items (CONSULT screen terms)	DTC*3		Reference page
	ECM*1	CONSULT GST*2	
Unable to access ECCS	—	—	EC-76
*COOLANT TEMP SEN	0908	P0125	EC-124
ABSOL PRESS SEN-SOR	0803	P0105	EC-100
CAMSHAFT POSI SEN	0101	P0340	EC-171
CLOSED LOOP	0307	P0130	EC-134
CLOSED THRL POS SW	0203	P0510	EC-226
COOLANT TEMP SEN*4	0103	P0115	EC-113
CRANK P/S (OBD) COG	0905	P1336	EC-262
CRANK POS SEN (OBD)	0802	P0335	EC-166
CYL 1 MISFIRE	0608	P0301	EC-162
CYL 2 MISFIRE	0607	P0302	EC-162
CYL 3 MISFIRE	0606	P0303	EC-162
CYL 4 MISFIRE	0605	P0304	EC-162
ECM	0301	P0605	EC-230
EGR SYSTEM	0302	P0400	EC-176
EGR TEMP SENSOR	0305	P1401	EC-271
EGRC SOLENOID/V	1005	P1400	EC-267
EGRC-BPT VALVE	0306	P0402	EC-184
EVAP PURG FLOW/ MON	0111	P1447	EC-288
EVAP SYS PRES SEN	0704	P0450	EC-212
EVAP (SMALL LEAK)	0705	P0440	EC-189
FRONT O2 SENSOR	0303	P0130	EC-129
FR O2 SEN HEATER	0901	P0135	EC-135
FUEL SYS DIAG-LEAN	0115	P0171	EC-148
FUEL SYS DIAG-RICH	0114	P0172	EC-153
IACV-AAC VALVE	0205	P0505	EC-221
IGN SIGNAL-PRIMARY	0201	P1320	EC-256
INT AIR TEMP SEN	0401	P0110	EC-107
MAP/BARO SW SOL/V	1302	P1105	EC-237
MASS AIR FLOW SEN*4	0102	P0100	EC-93
MULTI CYL MISFIRE	0701	P0300	EC-162
NO SELF DIAGNOSTIC FAILURE INDICATED	Flashing*5	No DTC	EC-45
NO SELF DIAGNOSTIC FAILURE INDICATED	**0505**	**P0000**	—
OVER HEAT	0208	P1900*6	EC-300
PARK/NEUT POSI SW	1003	P0705	EC-232
PURG CONT/V & S/V	0807	P0443	EC-199
PURG VOLUME CONT/V	1008	P1445	EC-281
REAR O2 SENSOR	0707	P0136	EC-139
RR O2 SEN HEATER	0902	P0141	EC-143
SWIRL/V CONT VC SW	0112	P1165	EC-251
SWIRL CONT S/V	1004	P1130	EC-243
TANK FUEL TEMP SEN	0402	P0180	EC-158
THROTTLE POSI SEN*4	0403	P0120	EC-118
TOR CONV CLUTCH S/V	0904	P1550	EC-295
TW CATALYST SYSTEM	0702	P0420	EC-186
VC/V BYPASS/V	0801	P1441	EC-276
VEHICLE SPEED SEN	0104	P0500	EC-217
VENT CONTROL VALVE	0903	P0446	EC-207

*1: In Diagnostic Test Mode II (Self-diagnostic results). These numbers are controlled by NISSAN.
*2: These numbers are prescribed by SAE J2012.
*3: 1st trip DTC No. is the same as DTC No.
*4: When the fail-safe operation occurs, the MIL illuminates.
*5: While engine is running.
*6: Since this diagnosis does not meet P1900 of SAE J2012, it is indicated only by CONSULT.

P NO. INDEX FOR DTC

DTC*3		Items (CONSULT screen terms)	Reference page
CONSULT GST*2	ECM*1		
—	—	Unable to access ECCS	EC-76
No DTC	Flashing*5	NO SELF DIAGNOSTIC FAILURE INDICATED	EC-45
P0000	**0505**	**NO SELF DIAGNOSTIC FAILURE INDICATED**	—
P0100	0102	MASS AIR FLOW SEN*4	EC-93
P0105	0803	ABSOL PRESS SEN-SOR	EC-100
P0110	0401	INT AIR TEMP SEN	EC-107
P0115	0103	COOLANT TEMP SEN*4	EC-113
P0120	0403	THROTTLE POSI SEN*4	EC-118
P0125	0908	*COOLANT TEMP SEN	EC-124
P0130	0307	CLOSED LOOP	EC-134
P0130	0303	FRONT O2 SENSOR	EC-129
P0135	0901	FR O2 SEN HEATER	EC-135
P0136	0707	REAR O2 SENSOR	EC-139
P0141	0902	RR O2 SEN HEATER	EC-143
P0171	0115	FUEL SYS DIAG-LEAN	EC-148
P0172	0114	FUEL SYS DIAG-RICH	EC-153
P0180	0402	TANK FUEL TEMP SEN	EC-158
P0300	0701	MULTI CYL MISFIRE	EC-162
P0301	0608	CYL 1 MISFIRE	EC-162
P0302	0607	CYL 2 MISFIRE	EC-162
P0303	0606	CYL 3 MISFIRE	EC-162
P0304	0605	CYL 4 MISFIRE	EC-162
P0335	0802	CRANK POS SEN (OBD)	EC-166
P0340	0101	CAMSHAFT POSI SEN	EC-171
P0400	0302	EGR SYSTEM	EC-176
P0402	0306	EGRC-BPT VALVE	EC-184
P0420	0702	TW CATALYST SYSTEM	EC-186
P0440	0705	EVAP (SMALL LEAK)	EC-189
P0443	0807	PURG CONT/V & S/V	EC-199
P0446	0903	VENT CONTROL VALVE	EC-207
P0450	0704	EVAP SYS PRES SEN	EC-212
P0500	0104	VEHICLE SPEED SEN	EC-217
P0505	0205	IACV-AAC VALVE	EC-221
P0510	0203	CLOSED THRL POS SW	EC-226
P0605	0301	ECM	EC-230
P0705	1003	PARK/NEUT POSI SW	EC-232
P1105	1302	MAP/BARO SW SOL/V	EC-237
P1130	1004	SWIRL CONT S/V	EC-243
P1165	0112	SWIRL/V CONT VC SW	EC-251
P1320	0201	IGN SIGNAL-PRIMARY	EC-256
P1336	0905	CRANK P/S (OBD) COG	EC-262
P1400	1005	EGRC SOLENOID/V	EC-267
P1401	0305	EGR TEMP SENSOR	EC-271
P1441	0801	VC/V BYPASS/V	EC-276
P1445	1008	PURG VOLUME CONT/V	EC-281
P1447	0111	EVAP PURG FLOW/MON	EC-288
P1550	0904	TOR CONV CLUTCH S/V	EC-295
P1900*6	0208	OVER HEAT	EC-300

*1: In Diagnostic Test Mode II (Self-diagnostic results). These numbers are controlled by NISSAN.
*2: These numbers are prescribed by SAE J2012.
*3: 1st trip DTC No. is the same as DTC No.
*4: When the fail-safe operation occurs, the MIL illuminates.
*5: While engine is running.
*6: Since this diagnosis does not meet P1900 of SAE J2012, it is indicated only by CONSULT.

Special Service Tools

The actual shapes of Kent-Moore tools may differ from those of special service tools illustrated here.

Tool number (Kent-Moore No.) Tool name	Description	
(J36471-A) Heated oxygen sensor wrench	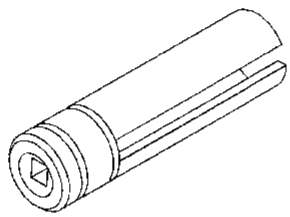 NT379	Loosening or tightening front and rear heated oxygen sensors
EG17650301 (J33984-A) Radiator cap tester adapter	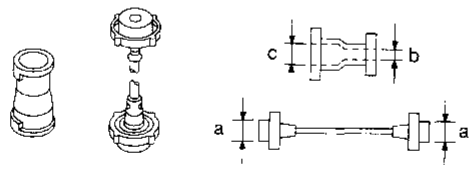 NT564	Adapting radiator cap tester to radiator filler neck **a: 28 (1.10) dia.** **b: 31.4 (1.236) dia.** **c: 41.3 (1.626) dia.** Unit: mm (in)

Commercial Service Tool

Tool name	Description	
Fuel filler cap adapter	NT653	Checking fuel tank vacuum relief valve opening pressure

Supplemental Restraint System (SRS) "AIR BAG"

The Supplemental Restraint System "Air Bag", used along with a seat belt, helps to reduce the risk or severity of injury to the driver in a frontal collision. The Supplemental Restraint System consists of an air bag module (located in the center of the steering wheel), a diagnosis sensor unit, warning lamp, wiring harness, crash zone sensor (4WD models) and spiral cable. Information necessary to service the system safely is included in the **RS section** of this Service Manual.

WARNING:

- **To avoid rendering the SRS inoperative, which could increase the risk of personal injury or death in the event of a collision which would result in air bag inflation, all maintenance must be performed by an authorized NISSAN dealer.**
- **Improper maintenance, including incorrect removal and installation of the SRS, can lead to personal injury caused by unintentional activation of the system.**
- **Do not use electrical test equipment on any circuit related to the SRS unless instructed to in this Service Manual. SRS wiring harnesses are covered with yellow insulation either just before the harness connectors or for the complete harness, for easy identification.**

Precautions for On Board Diagnostic (OBD) System of Engine

The ECM (ECCS control module) has an on board diagnostic system. It will light up the malfunction indicator lamp (MIL) to warn the driver of a malfunction causing emission deterioration.

CAUTION:

- **Be sure to turn the ignition switch "OFF" and disconnect the negative battery terminal before any repair or inspection work. The open/short circuit of related switches, sensors, solenoid valves, etc., will cause the MIL to light up.**
- **Be sure to connect and lock the connectors securely after work. A loose (unlocked) connector will cause the MIL to light up due to the open circuit. (Be sure the connector is free from water, grease, dirt, bent terminals, etc.)**
- **Be sure to route and secure the harnesses properly after work. The interference of the harness with a bracket, etc., may cause the MIL to light up due to the short circuit.**
- **Be sure to connect rubber tubes properly after work. A misconnected or disconnected rubber tube may cause the MIL to light up due to the malfunction of the EGR system or fuel injection system, etc.**
- **Be sure to erase the unnecessary malfunction information (repairs completed) from the ECM before returning the vehicle to the customer.**

Engine Fuel & Emission Control System

FUEL PUMP
- Do not operate fuel pump when there is no fuel in lines.
- Tighten fuel hose clamps to the specified torque. (Refer to MA section.)

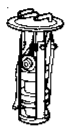

BATTERY
- Always use a 12 volt battery as power source.
- Do not attempt to disconnect battery cables while engine is running.

WIRELESS EQUIPMENT
- When installing CB ham radio or a mobile phone, be sure to observe the following as it may adversely affect electronic control systems depending on its installation location.

1) Keep the antenna as far away as possible from the electronic control units.
2) Keep the antenna feeder line more than 20 cm (7.9 in) away from the harness of electronic controls.
   Do not let them run parallel for a long distance.
3) Adjust the antenna and feeder line so that the standing-wave ratio can be kept smaller.
4) Be sure to ground the radio to vehicle body.

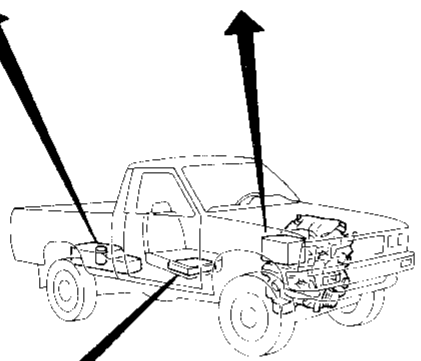

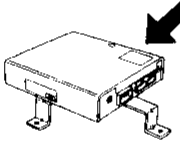

ECM
- Do not disassemble ECCS control module (ECM).
- Do not turn diagnosis mode selector forcibly.
- If a battery terminal is disconnected, the memory will return to the ECM value.
  The ECCS will now start to self-control at its initial value. Engine operation can vary slightly when the terminal is disconnected. However, this is not an indication of a problem. Do not replace parts because of a slight variation.

WHEN STARTING
- Do not depress accelerator pedal when starting.
- Immediately after starting, do not rev up engine unnecessarily.
- Do not rev up engine just prior to shutdown.

ECCS PARTS HANDLING
- Handle mass air flow sensor carefully to avoid damage.
- Do not disassemble mass air flow sensor.
- Do not clean mass air flow sensor with any type of detergent.
- Do not disassemble IACV-AAC valve.
- Even a slight leak in the air intake system can cause serious problems.
- Do not shock or jar the camshaft position sensor.

ECCS HARNESS HANDLING
- Securely connect ECCS harness connectors.
  A poor connection can cause an extremely high (surge) voltage to develop in coil and condenser, thus resulting in damage to ICs.
- Keep ECCS harness at least 10 cm (3.9 in) away from adjacent harnesses, to prevent an ECCS system malfunction due to receiving external noise.
- Keep ECM parts and harnesses dry.
- Before removing parts, turn of ignition switch and then disconnect battery ground cable.

SEF903MC

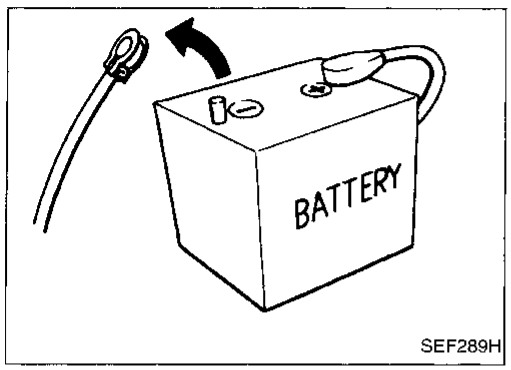

SEF289H

Precautions

- **Before connecting or disconnecting the ECM harness connector, turn ignition switch OFF and disconnect negative battery terminal. Failure to do so may damage the ECM because battery voltage is applied to ECM even if ignition switch is turned off.**

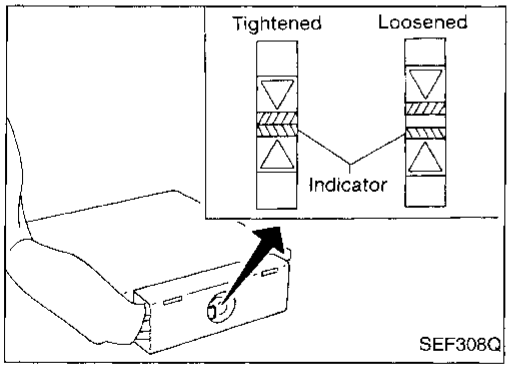

SEF308Q

- **When connecting ECM harness connector, tighten securing bolt until the gap between orange indicators disappears.**
  : 3 - 5 N·m (0.3 - 0.5 kg-m, 26 - 43 in-lb)

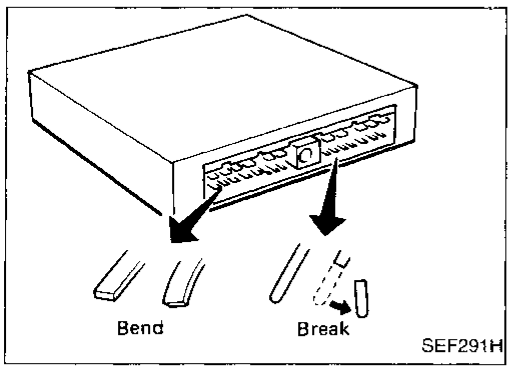

SEF291H

- **When connecting or disconnecting pin connectors into or from ECM, take care not to damage pin terminals (bend or break).**
  Make sure that there are not any bends or breaks on ECM pin terminal when connecting pin connectors.

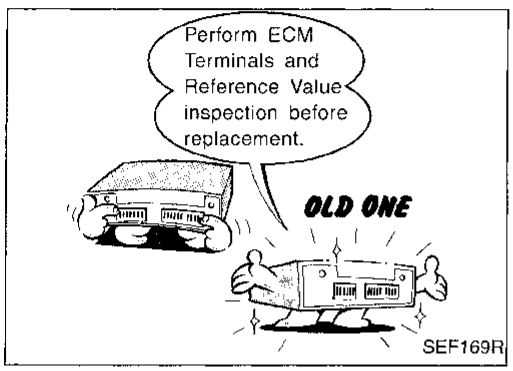

SEF169R

- **Before replacing ECM, perform ECM Terminals and Reference Value inspection and make sure ECM functions properly. Refer to EC-83.**

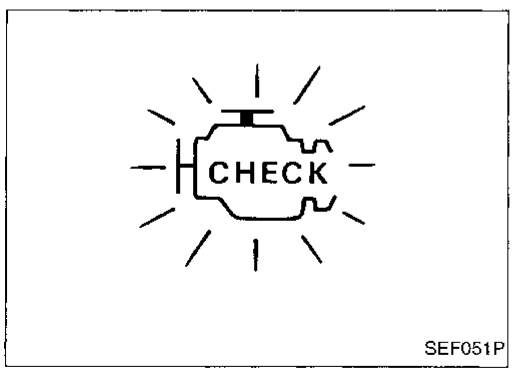

SEF051P

- **After performing each TROUBLE DIAGNOSIS, perform "OVERALL FUNCTION CHECK" or "DTC (Diagnostic Trouble Code) CONFIRMATION PROCEDURE".**
  The DTC should not be displayed in the "DTC CONFIRMATION PROCEDURE" if the repair is completed. The "OVERALL FUNCTION CHECK" should be a good result if the repair is completed.

Precautions (Cont'd)

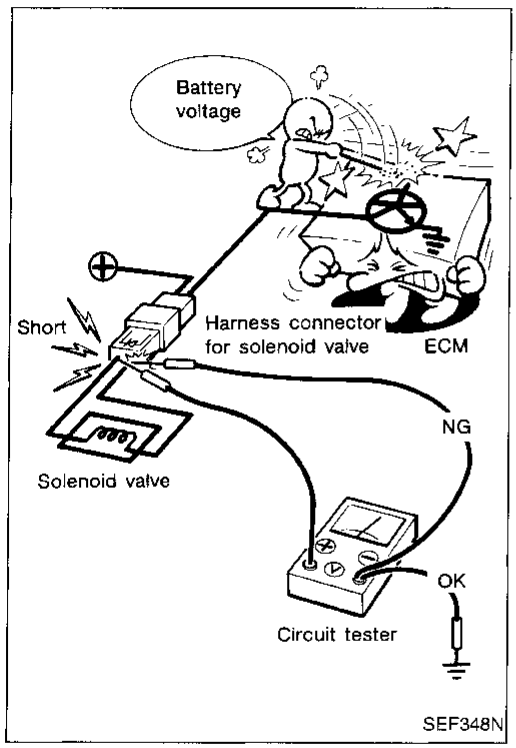

- **When measuring ECM signals with a circuit tester, never allow the two tester probes to contact.**
  Accidental contact of probes will cause a short circuit and damage the ECM power transistor.

Circuit Diagram

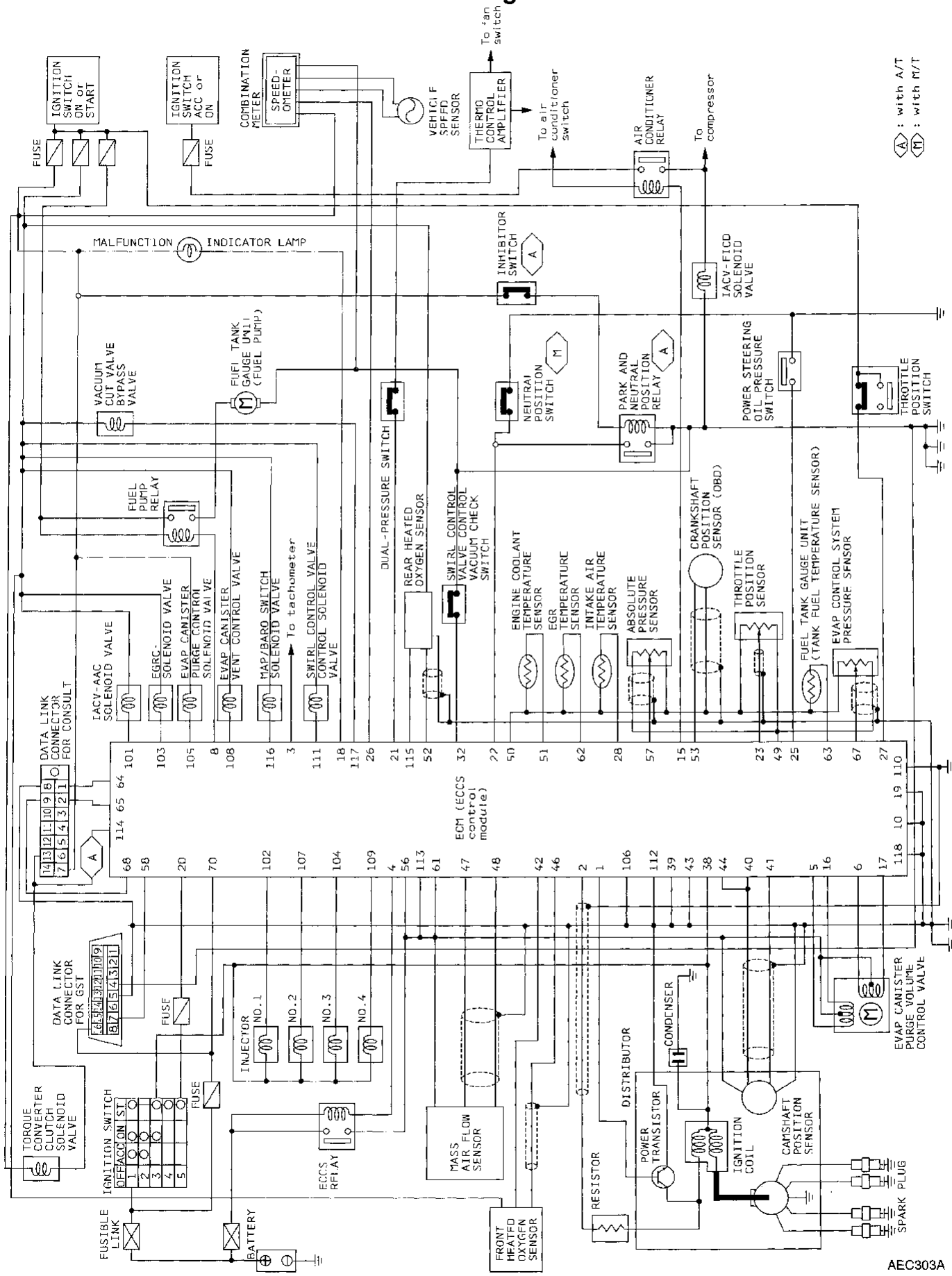

System Diagram

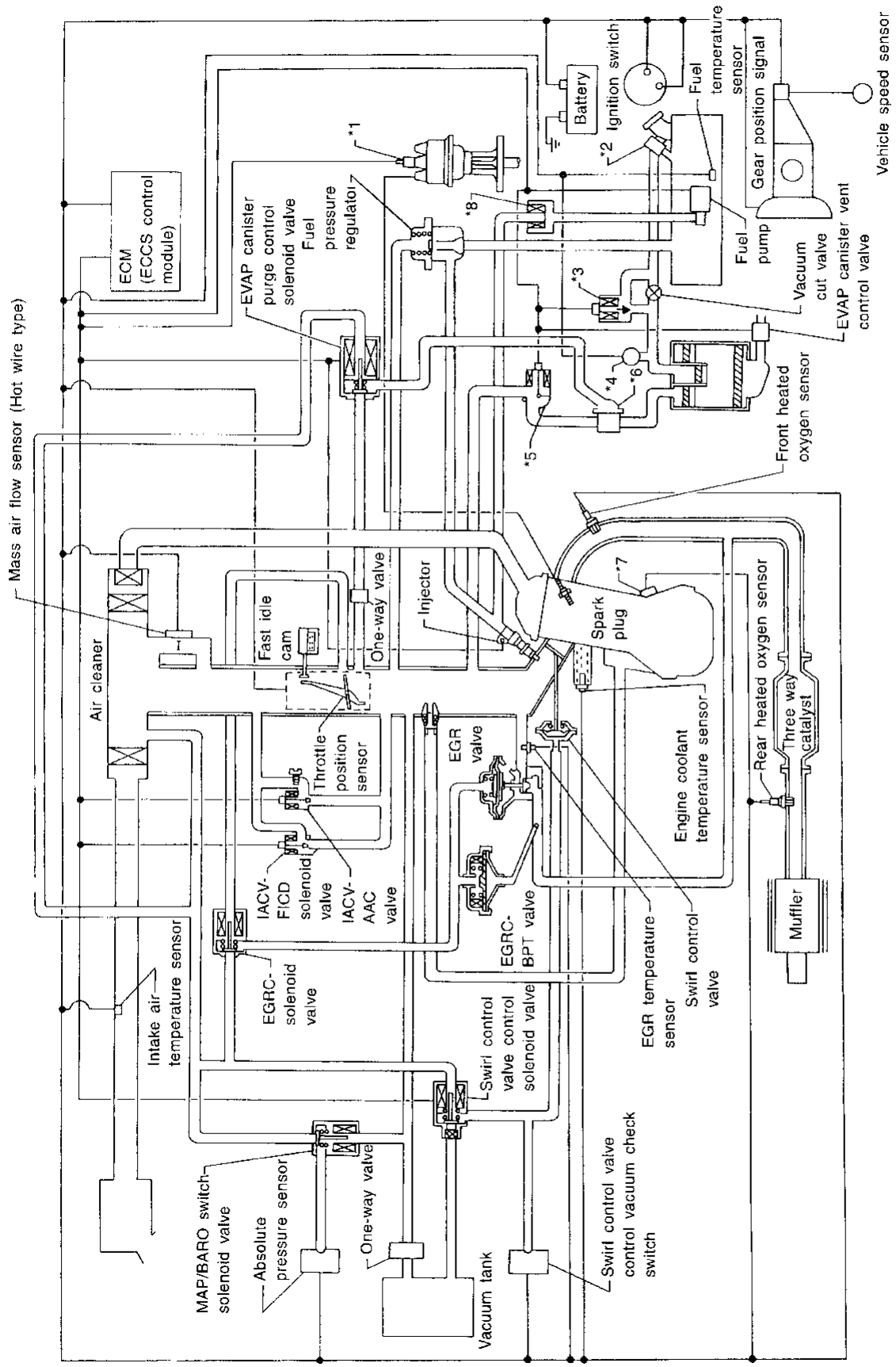

*1: Ignition coil, power transistor and camshaft position sensor built into distributor
*2: EVAP shut valve
*3: Vacuum cut valve bypass valve
*4: EVAP control system pressure sensor
*5: EVAP canister purge volume control valve
*6: EVAP canister purge control valve
*7: Crankshaft position sensor (OBD)
*8: Fuel filter

SEF821T

ECCS Component Parts Location

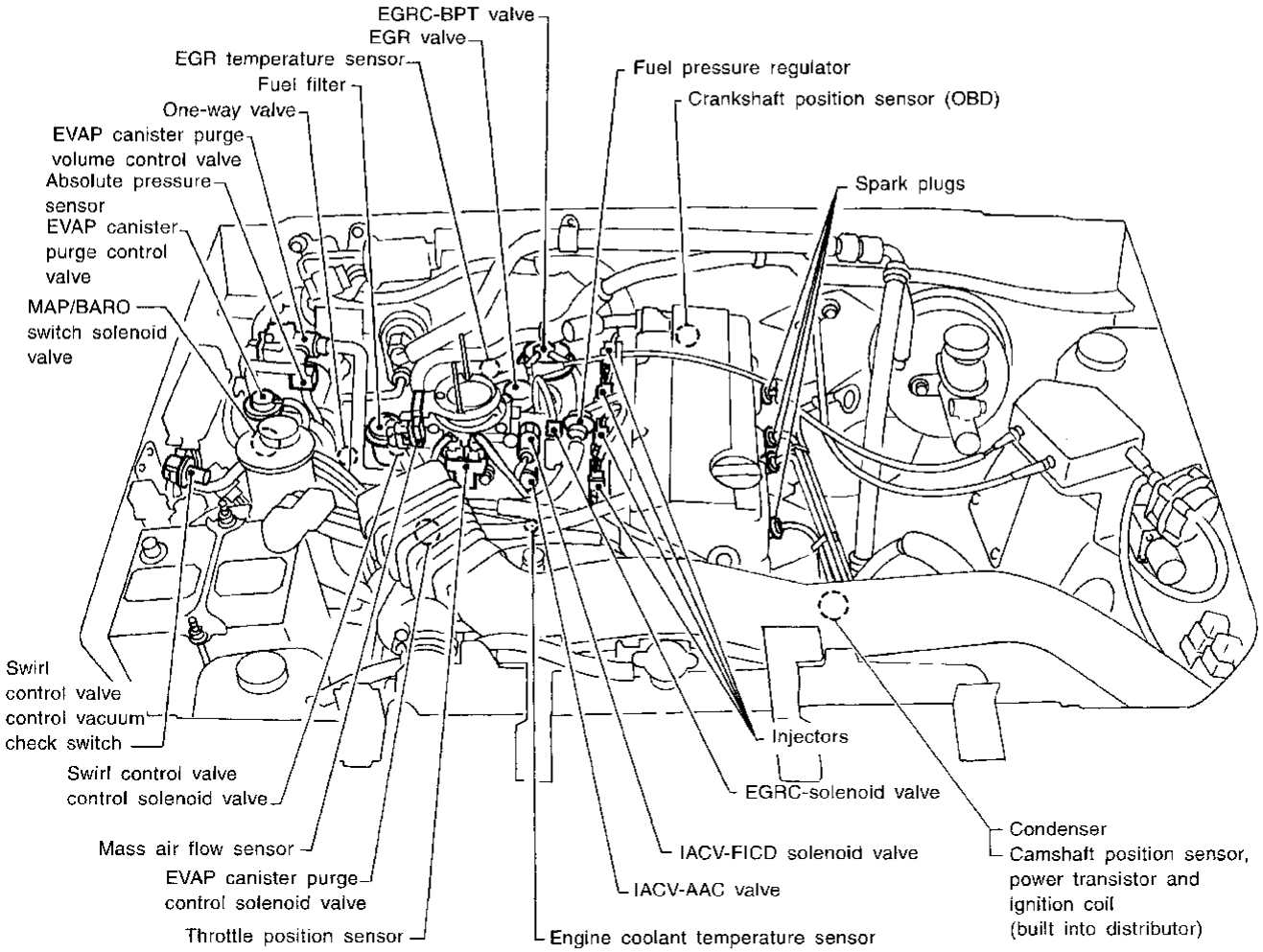

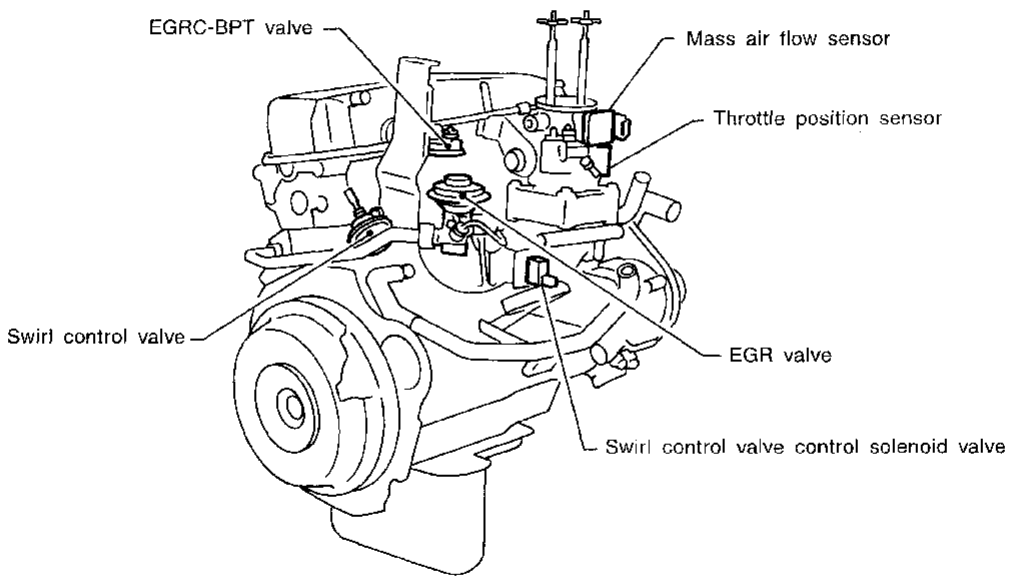

SEF725T

ECCS Component Parts Location (Cont'd)

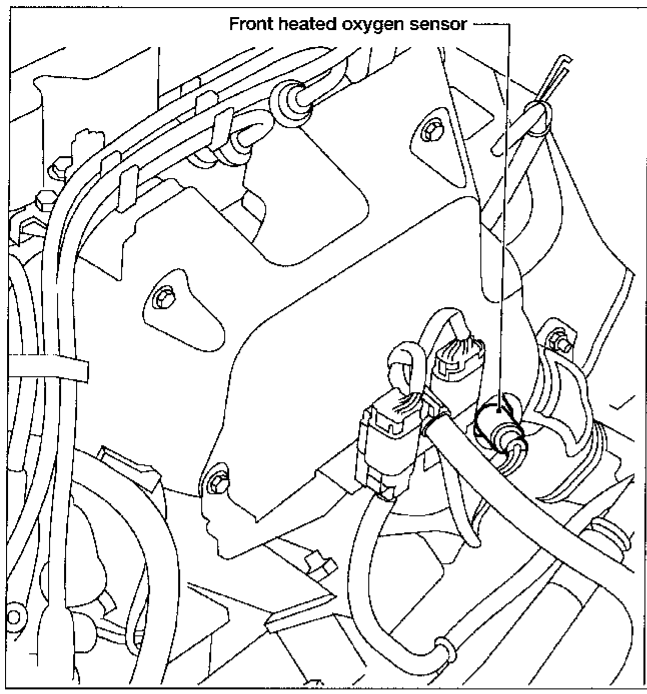

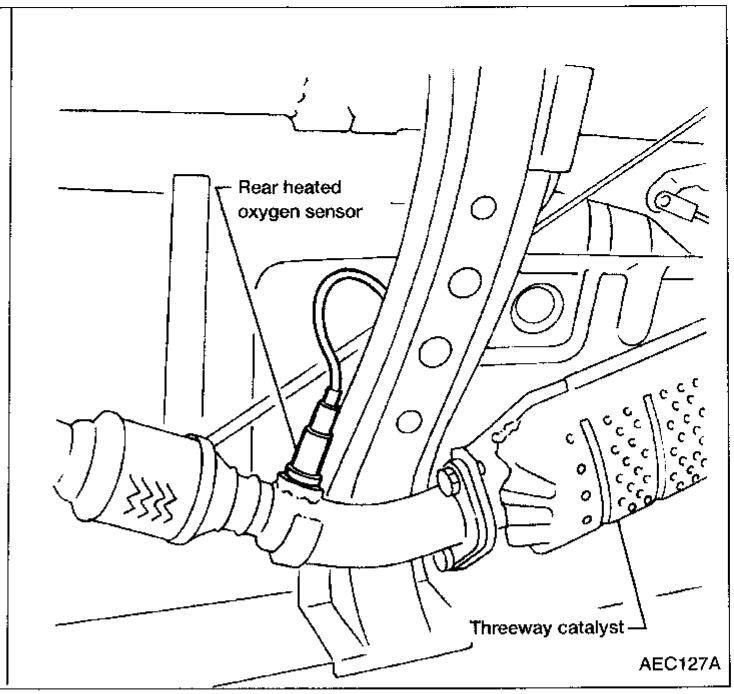

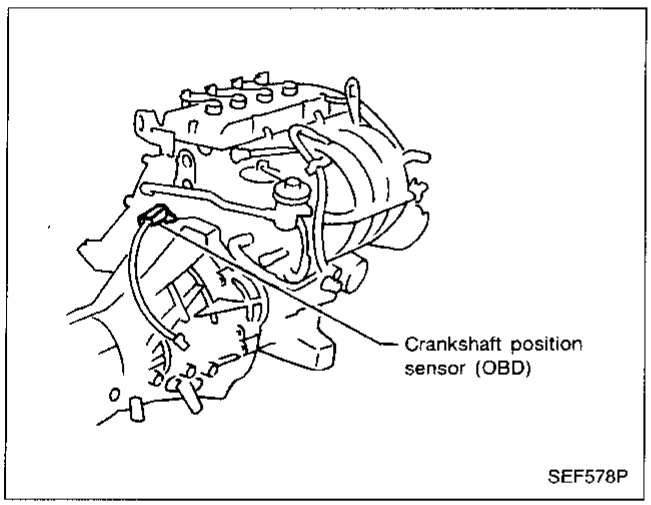

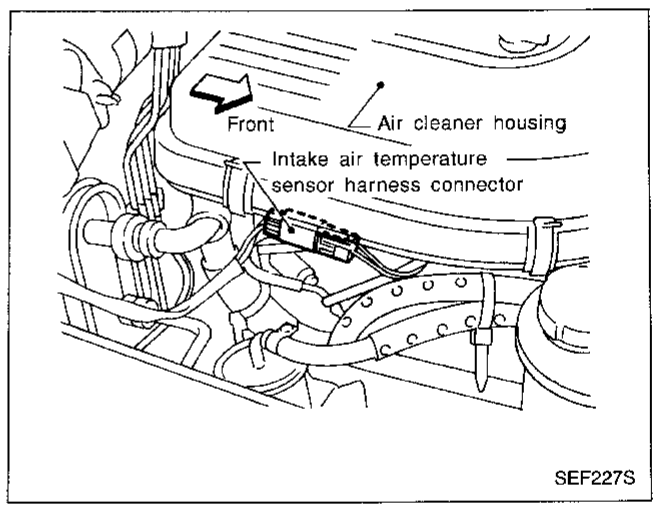

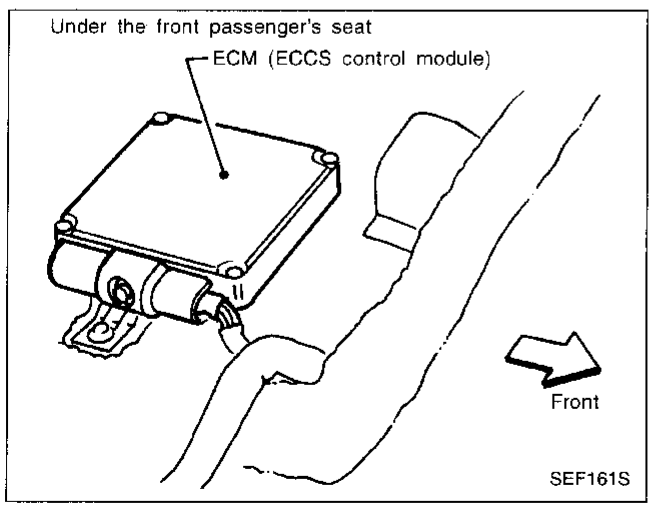

Vacuum Hose Drawing

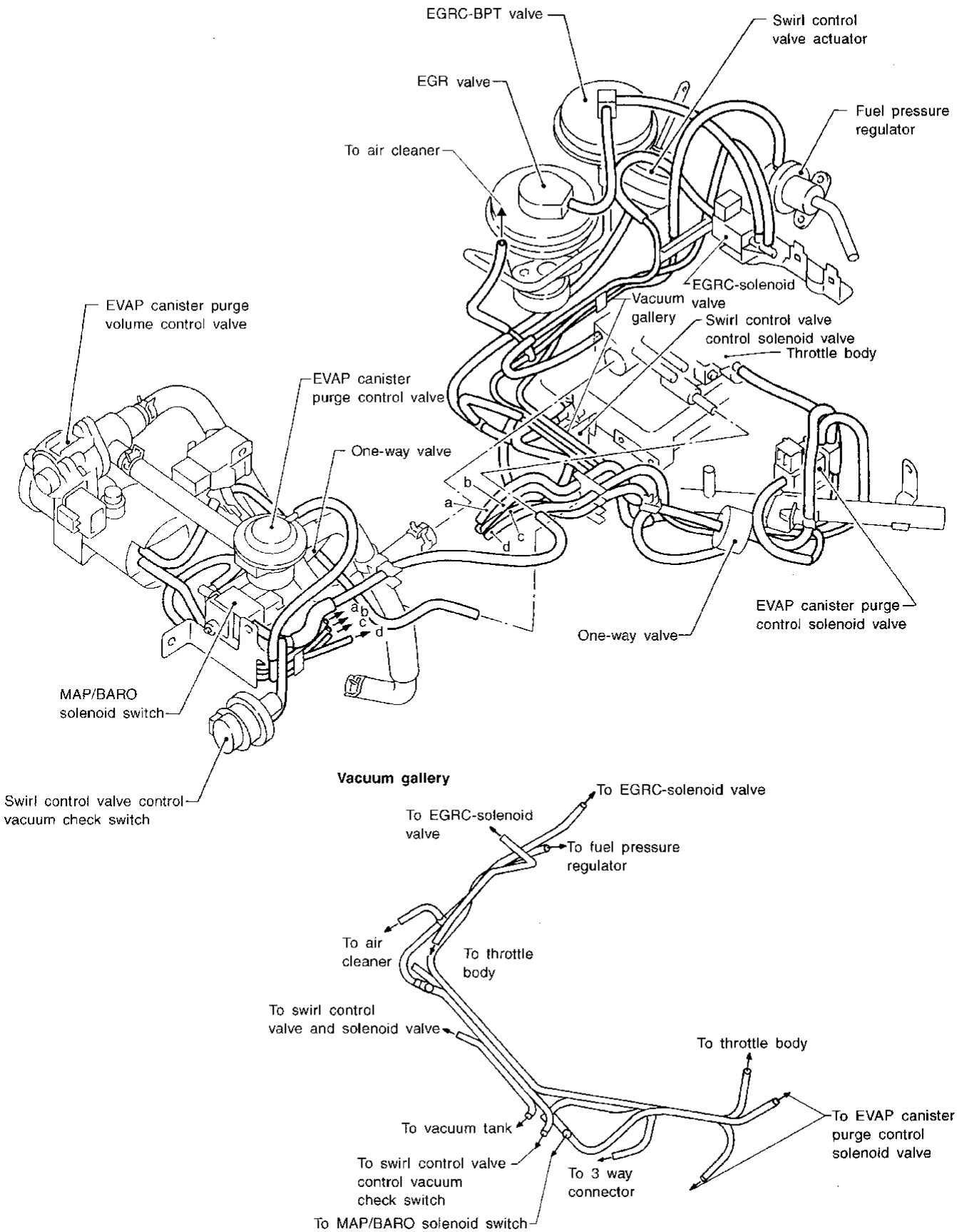

Refer to "System Diagram", EC-10 for vacuum control system.

AEC146A

System Chart

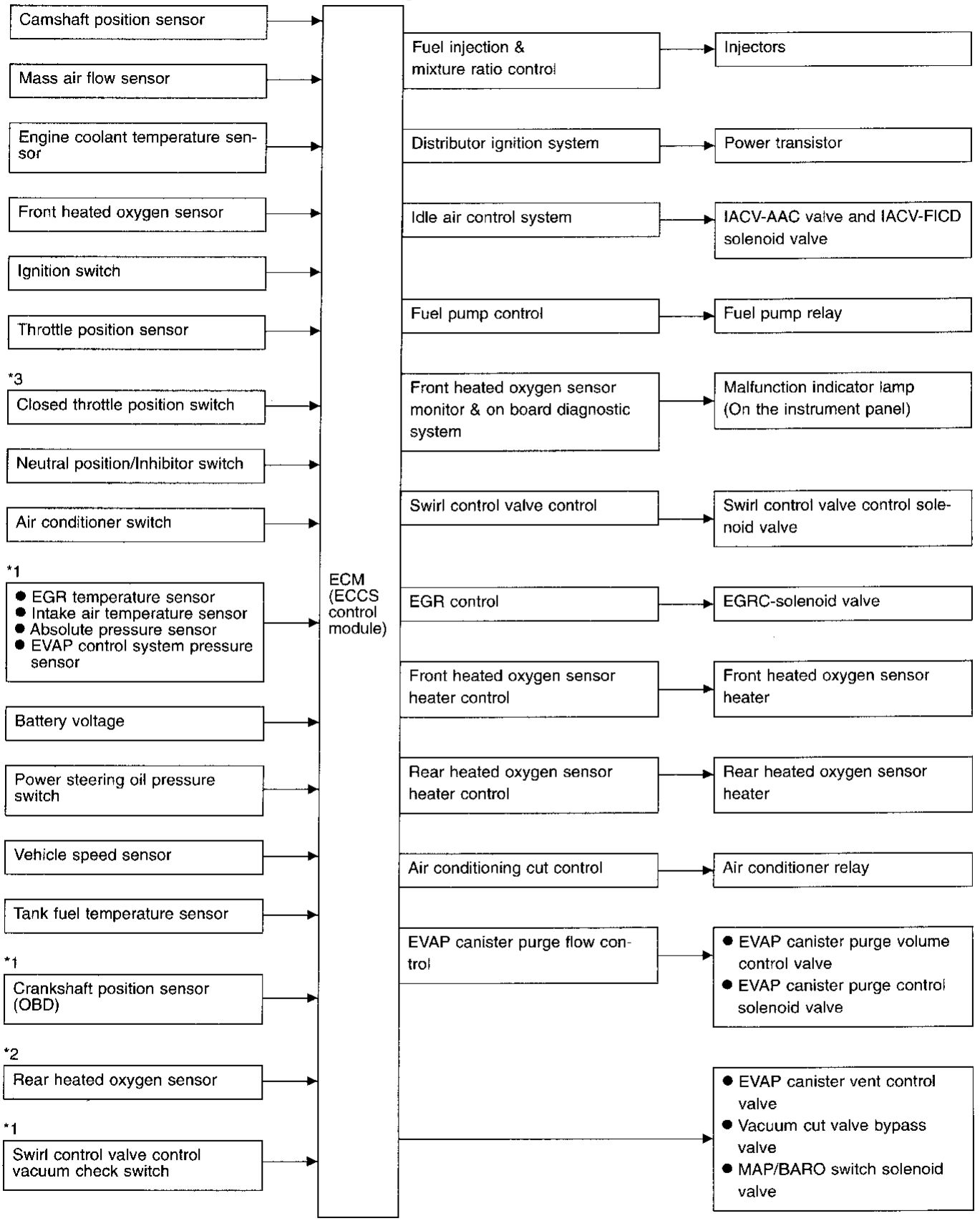

*1: These sensors are not used to control the engine system. They are used only for the on board diagnosis.
*2: This sensor is not used to control the engine system under normal conditions.
*3: This switch will operate in place of the throttle position sensor to control EVAP parts if the sensor malfunctions.

Multiport Fuel Injection (MFI) System

INPUT/OUTPUT SIGNAL LINE

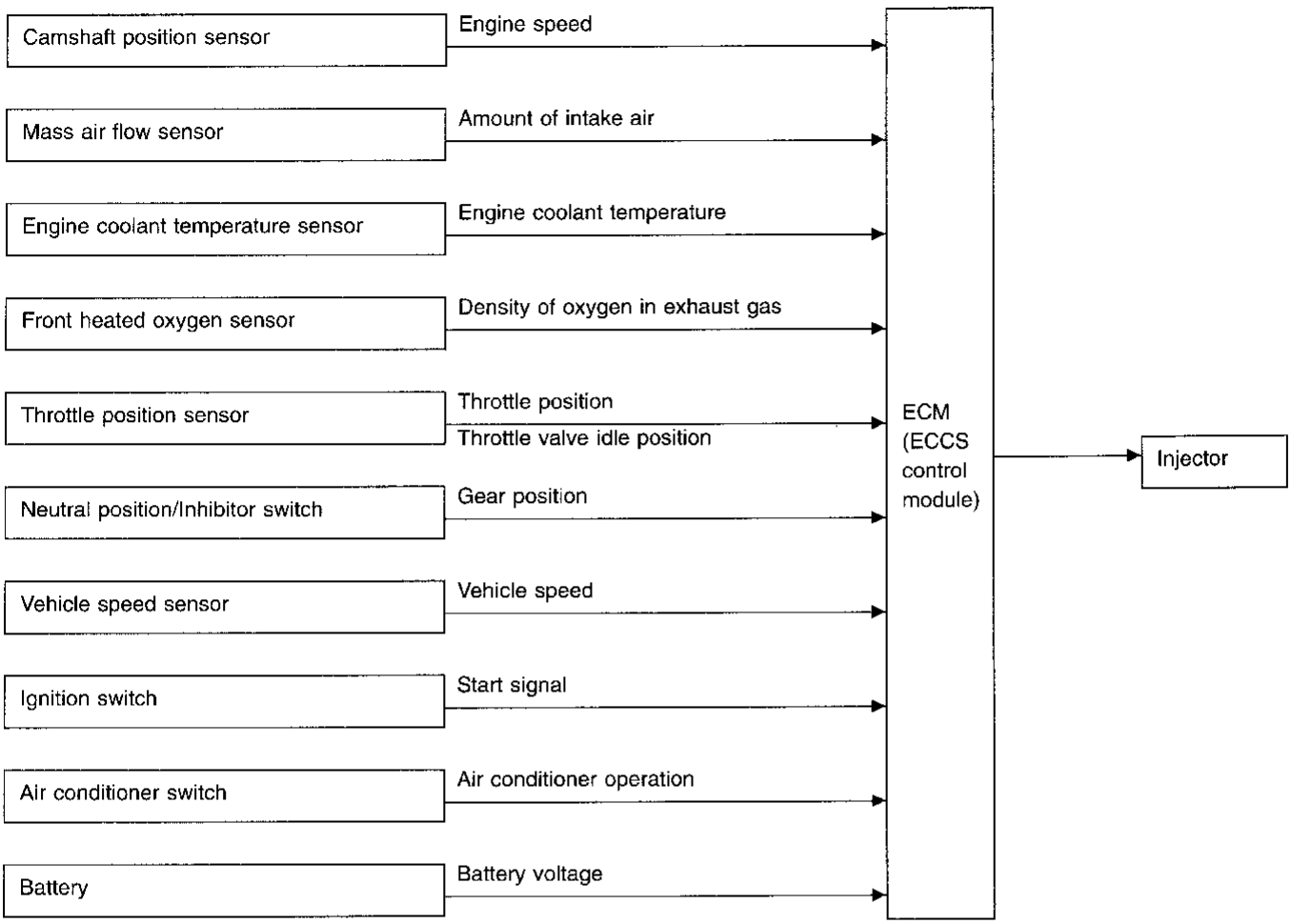

BASIC MULTIPORT FUEL INJECTION SYSTEM

The amount of fuel injected from the fuel injector is determined by the ECM. The ECM controls the length of time the valve remains open (injection pulse duration). The amount of fuel injected is a program value in the ECM memory. The program value is preset by engine operating conditions. These conditions are determined by input signals (for engine speed and air intake) from both the camshaft position sensor and the mass air flow sensor.

VARIOUS FUEL INJECTION INCREASE/DECREASE COMPENSATION

In addition, the amount of fuel injection is compensated for to improve engine performance under various operating conditions as listed below.

⟨Fuel increase⟩
- During warm-up
- When starting the engine
- During acceleration
- Hot-engine operation
- High-load, high-speed operation

⟨Fuel decrease⟩
- During deceleration
- During high engine speed operation

Multiport Fuel Injection (MFI) System (Cont'd)

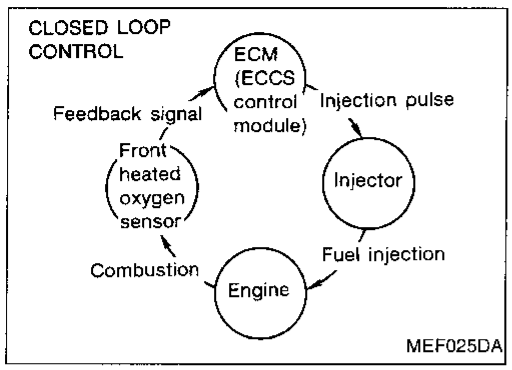

MIXTURE RATIO FEEDBACK CONTROL

The mixture ratio feedback system provides the best air-fuel mixture ratio for driveability and emission control. The three way catalyst can then better reduce CO, HC and NOx emissions. This system uses a front heated oxygen sensor in the exhaust manifold to monitor if the engine is rich or lean. The ECM adjusts the injection pulse width according to the sensor voltage signal. For more information about front heated oxygen sensor, refer to page EC-129. This maintains the mixture ratio within the range of stoichiometric (ideal air-fuel mixture).
This stage is referred to as the closed loop control condition.
The rear heated oxygen sensor is located downstream of the three way catalyst. Even if the switching characteristics of the front heated oxygen sensor shift, the air-fuel ratio is controlled to stoichiometric by the signal from the rear heated oxygen sensor.

OPEN LOOP CONTROL

The open loop system condition refers to when the ECM detects any of the following conditions. Feedback control stops in order to maintain stabilized fuel combustion.

- Deceleration and acceleration
- High-load, high-speed operation
- Engine idling
- Malfunction of front heated oxygen sensor or its circuit
- Insufficient activation of front heated oxygen sensor at low engine coolant temperature
- High-engine coolant temperature
- During warm-up
- After shifting from "N" to "D"
- When starting the engine

MIXTURE RATIO SELF-LEARNING CONTROL

The mixture ratio feedback control system monitors the mixture ratio signal transmitted from the front heated oxygen sensor. This feedback signal is then sent to the ECM. The ECM controls the basic mixture ratio as close to the theoretical mixture ratio as possible. However, the basic mixture ratio is not necessarily controlled as originally designed. Both manufacturing differences (i.e. mass air flow sensor hot wire) and characteristic changes during operation (i.e., injector clogging) directly affect mixture ratio.
Accordingly, the difference between the basic and theoretical mixture ratios is monitored in this system. This is then computed in terms of "injection pulse duration" to automatically compensate for the difference between the two ratios.
"Fuel trim" refers to the feedback compensation value compared against the basic injection duration. Fuel trim includes short-term fuel trim and long-term fuel trim.
"Short-term fuel trim" is the short-term fuel compensation used to maintain the mixture ratio at its theoretical value. The signal from the front heated oxygen sensor indicates whether the mixture ratio is RICH or LEAN compared to the theoretical value. The signal then triggers a reduction in fuel volume if the mixture ratio is rich, and an increase in fuel volume if it is lean.
"Long-term fuel trim" is overall fuel compensation carried out long-term to compensate for continual deviation of the short-term fuel trim from the central value. Such deviation will occur due to individual engine differences, wear over time and changes in the usage environment.

Multiport Fuel Injection (MFI) System (Cont'd)

FUEL INJECTION TIMING

Two types of systems are used.

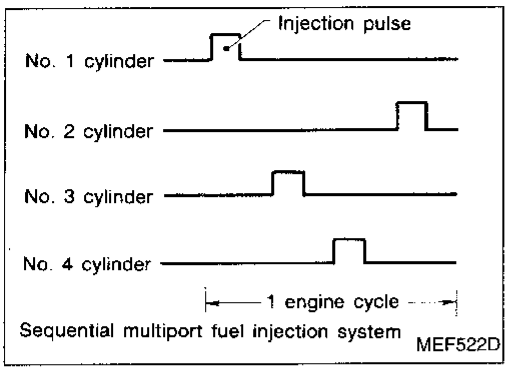

Sequential multiport fuel injection system

Sequential multiport fuel injection system

Fuel is injected into each cylinder during each engine cycle according to the firing order. This system is used when the engine is running.

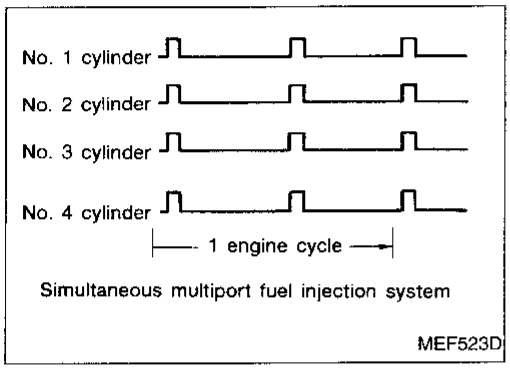

Simultaneous multiport fuel injection system

Simultaneous multiport fuel injection system

Fuel is injected simultaneously into all four cylinders twice each engine cycle. In other words, pulse signals of the same width are simultaneously transmitted from the ECM.
The four injectors will then receive the signals two times for each engine cycle.
This system is used when the engine is being started and/or if the fail-safe system (CPU) is operating.

FUEL SHUT-OFF

Fuel to each cylinder is cut off during deceleration or operation of the engine at excessively high speeds.

Distributor Ignition (DI) System

INPUT/OUTPUT SIGNAL LINE

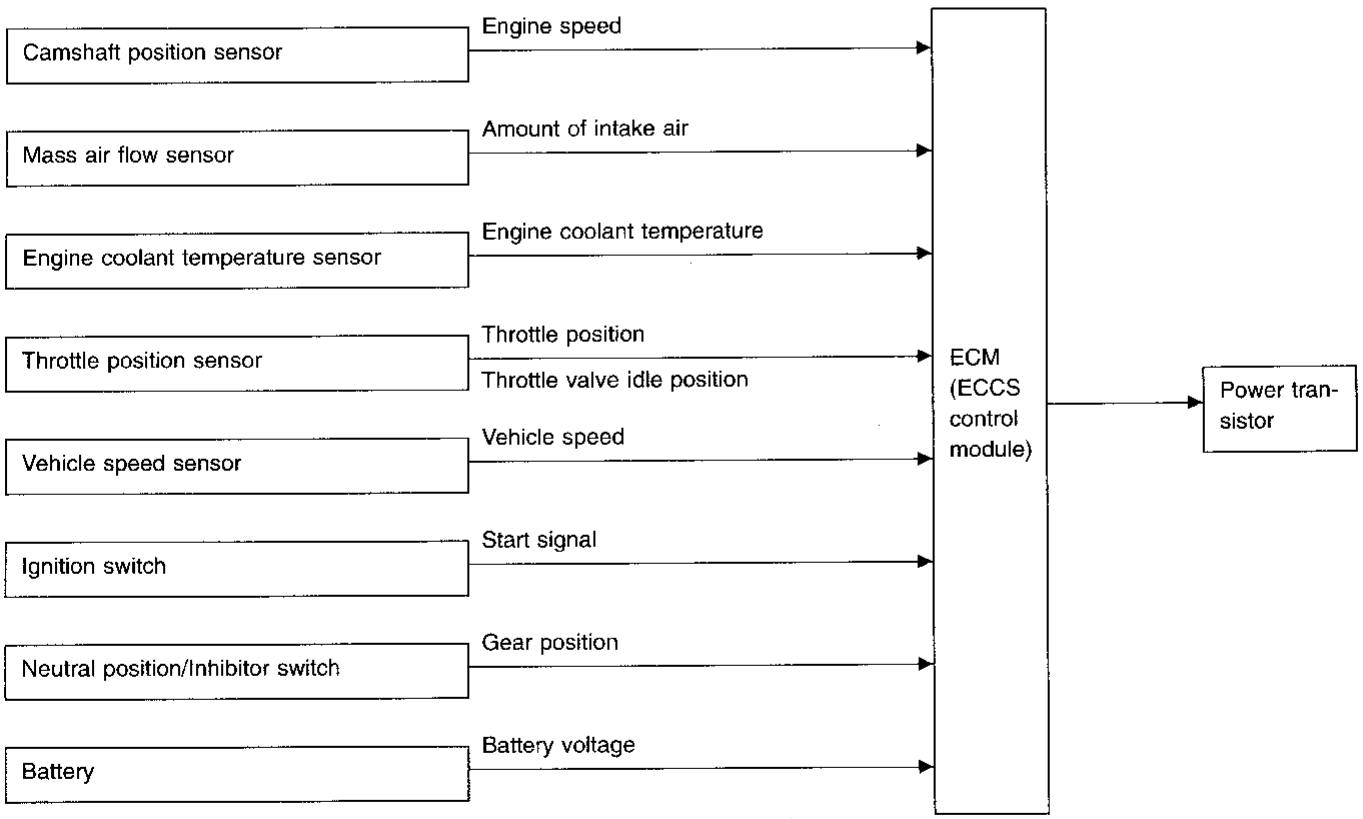

Distributor Ignition (DI) System (Cont'd)

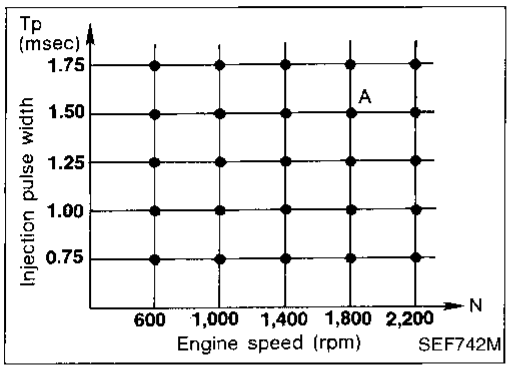

SYSTEM DESCRIPTION

The ignition timing is controlled by the ECM to maintain the best air-fuel ratio for every running condition of the engine.
The ignition timing data is stored in the ECM. This data forms the map shown.
The ECM detects information such as the injection pulse width and camshaft position sensor signal. Responding to this information, ignition signals are transmitted to the power transistor.

e.g. N: 1,800 rpm, Tp: 1.50 msec
A °BTDC

During the following conditions, the ignition timing is revised by the ECM according to the other data stored in the ECM.

- At starting
- During warm-up
- At idle
- When swirl control valve operates
- Hot engine operation
- During acceleration

Air Conditioning Cut Control

INPUT/OUTPUT SIGNAL LINE

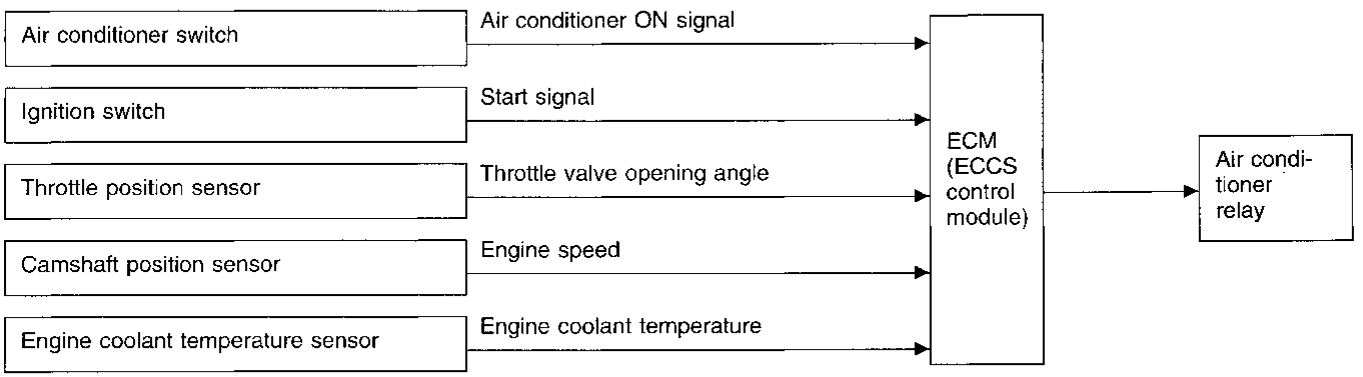

SYSTEM DESCRIPTION

This system improves engine operation when the air conditioner is used.
Under the following conditions, the air conditioner is turned off.

- When the accelerator pedal is fully depressed.
- When cranking the engine.
- When the engine coolant temperature becomes excessively high.

Fuel Cut Control (at no load & high engine speed)

INPUT/OUTPUT SIGNAL LINE

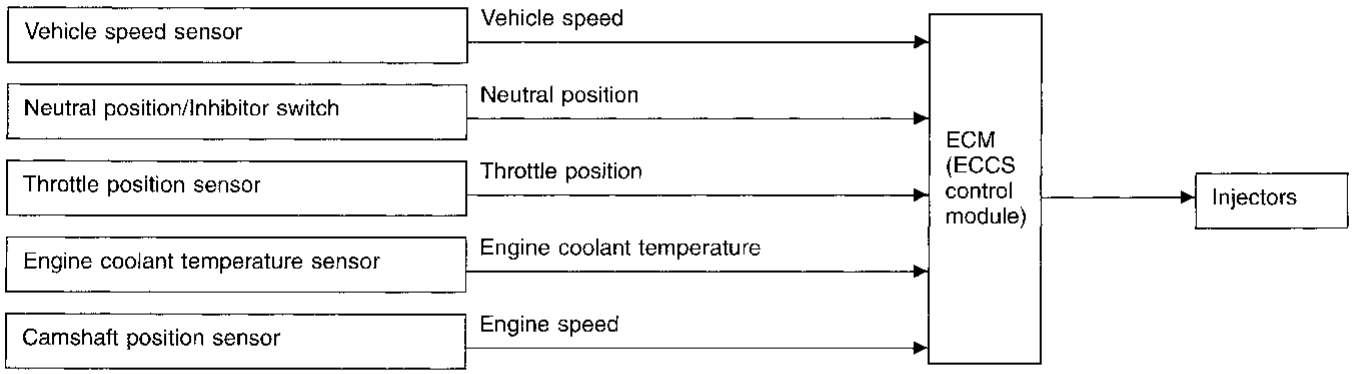

If the engine speed is above 3,500 rpm with no load (for example, in neutral and engine speed over 3,500 rpm) fuel will be cut off after some time. The exact time when the fuel is cut off varies based on engine speed.
Fuel cut will operate until the engine speed reaches 1,500 rpm, then fuel cut is cancelled.

NOTE:
This function is different than deceleration control listed under multiport fuel injection on EC-15.

Description

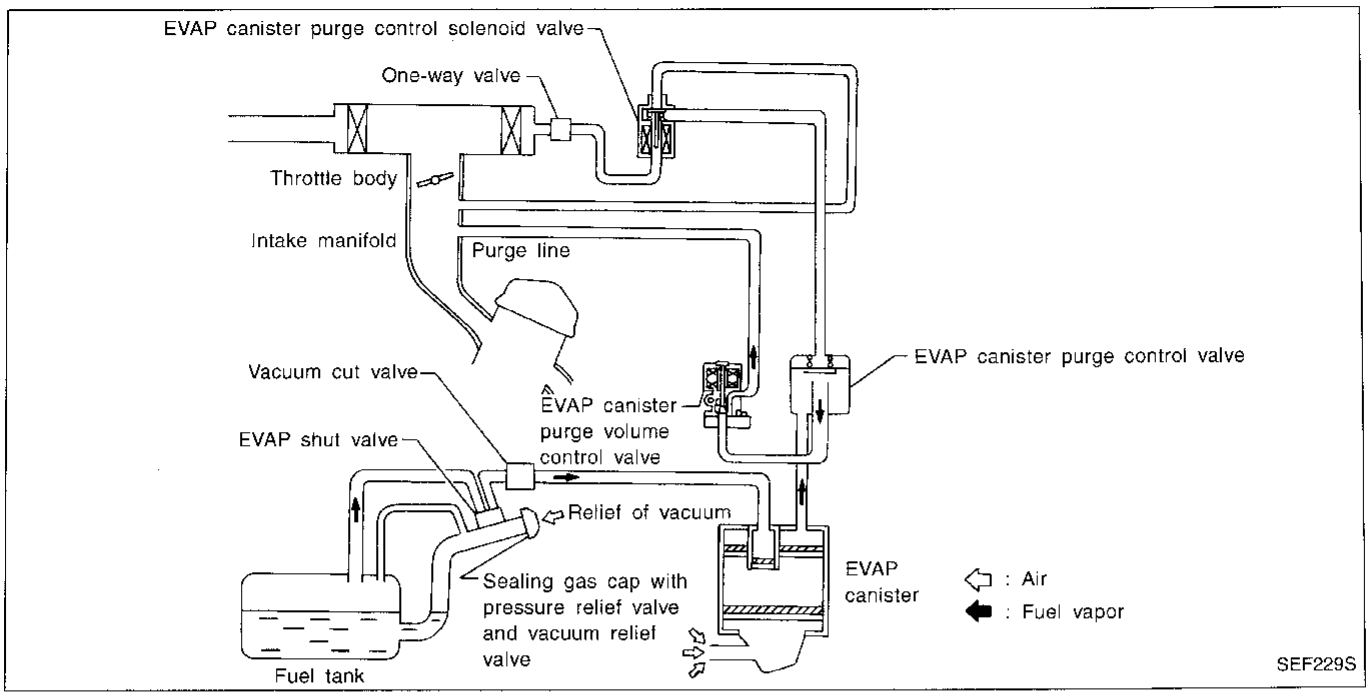

The evaporative emission system is used to reduce hydrocarbons emitted into the atmosphere from the fuel system. This reduction of hydrocarbons is accomplished by activated charcoals in the EVAP canister.
The fuel vapor in the sealed fuel tank is led into the EVAP canister which contains activated carbon and the vapor is stored there when the engine is not operating.
The vapor in the EVAP canister is purged by the air through the purge line to the intake manifold when the engine is operating.
EVAP canister purge volume control valve is controlled by engine control module. When the engine operates, the flow rate of vapor controlled by EVAP canister purge volume control valve is proportionally regulated as the air flow increases.
EVAP canister purge control valve shuts off the vapor purge line during decelerating and idling, and under normal operating conditions the valve is usually open.
EVAP shut valve shuts off the vapor charge line when fuel is being supplied to the fuel tank.

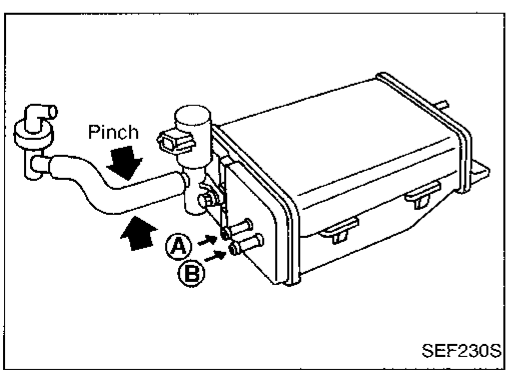

Inspection

EVAP CANISTER

Check EVAP canister as follows:
1. Pinch the fresh air vent hose.
2. Blow air in port Ⓐ and check that it flows freely out of port Ⓑ.

Inspection (Cont'd)

TIGHTENING TORQUE

Tighten EVAP canister as shown in the figure.

Make sure new O-ring is installed properly between EVAP canister and EVAP canister vent control valve.

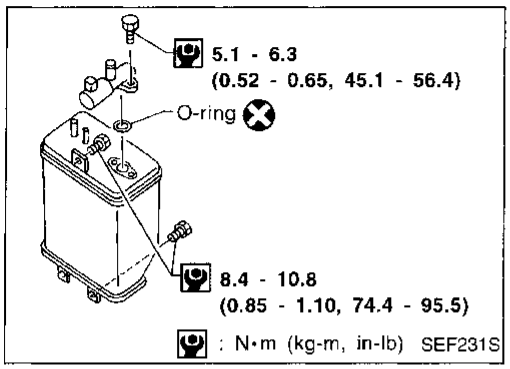

FUEL TANK VACUUM RELIEF VALVE (Built into fuel filler cap)

1. Wipe clean valve housing.
2. Check valve opening pressure and vacuum.
   Pressure:
   15.3 - 20.0 kPa (0.156 - 0.204 kg/cm^2, 2.22 - 2.90 psi)
   Vacuum:
   –6.0 to –3.3 kPa (–0.061 to –0.034 kg/cm^2, –0.87 to –0.48 psi)
3. If out of specification, replace fuel filler cap as an assembly.

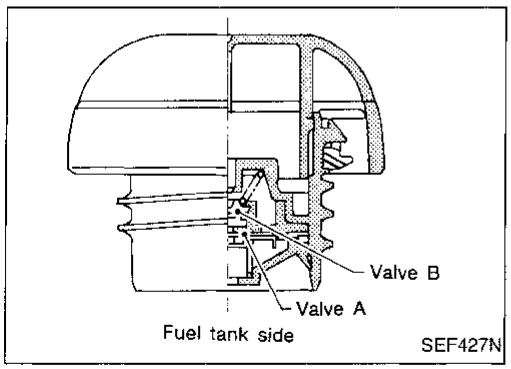

CAUTION:
Use only a genuine fuel filler cap as a replacement. If an incorrect fuel filler cap is used, the MIL may come on.

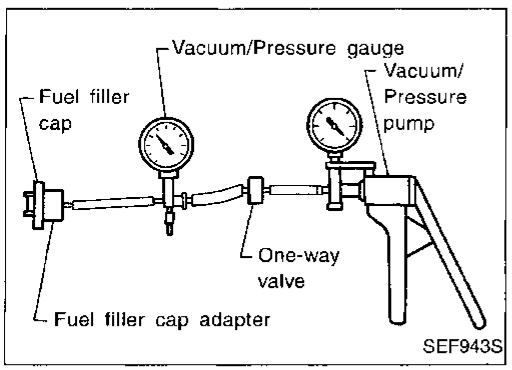

EVAPORATIVE EMISSION (EVAP) SHUT VALVE

- When pushing down the shutter inside the fuel filler opening, the EVAP shut valve is closed.
- When releasing the shutter, the valve is open.

1. Blow air from one side of the EVAP shut valve tube ⓐ or ⓑ and check that there is air flow.
2. Insert suitable steel tube as shown in the figure.
3. Blow air from one side of the EVAP shut valve tube ⓐ or ⓑ and check that there is no air flow.

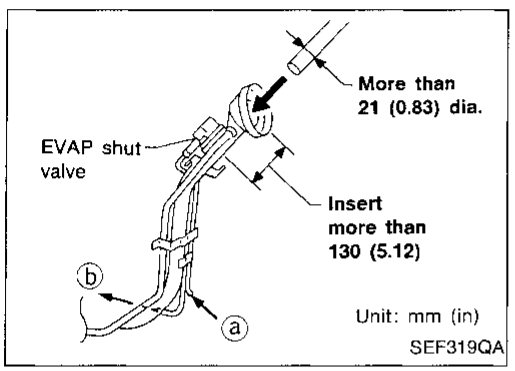

EVAP CANISTER PURGE CONTROL VALVE

Refer to EC-199.

VACUUM CUT VALVE

Refer to EC-280.

EVAPORATIVE EMISSION (EVAP) CANISTER PURGE VOLUME CONTROL VALVE

Refer to EC-281.

EVAPORATIVE EMISSION (EVAP) CANISTER PURGE CONTROL SOLENOID VALVE

Refer to EC-199.

TANK FUEL TEMPERATURE SENSOR

Refer to EC-158.

Evaporative Emission Line Drawing

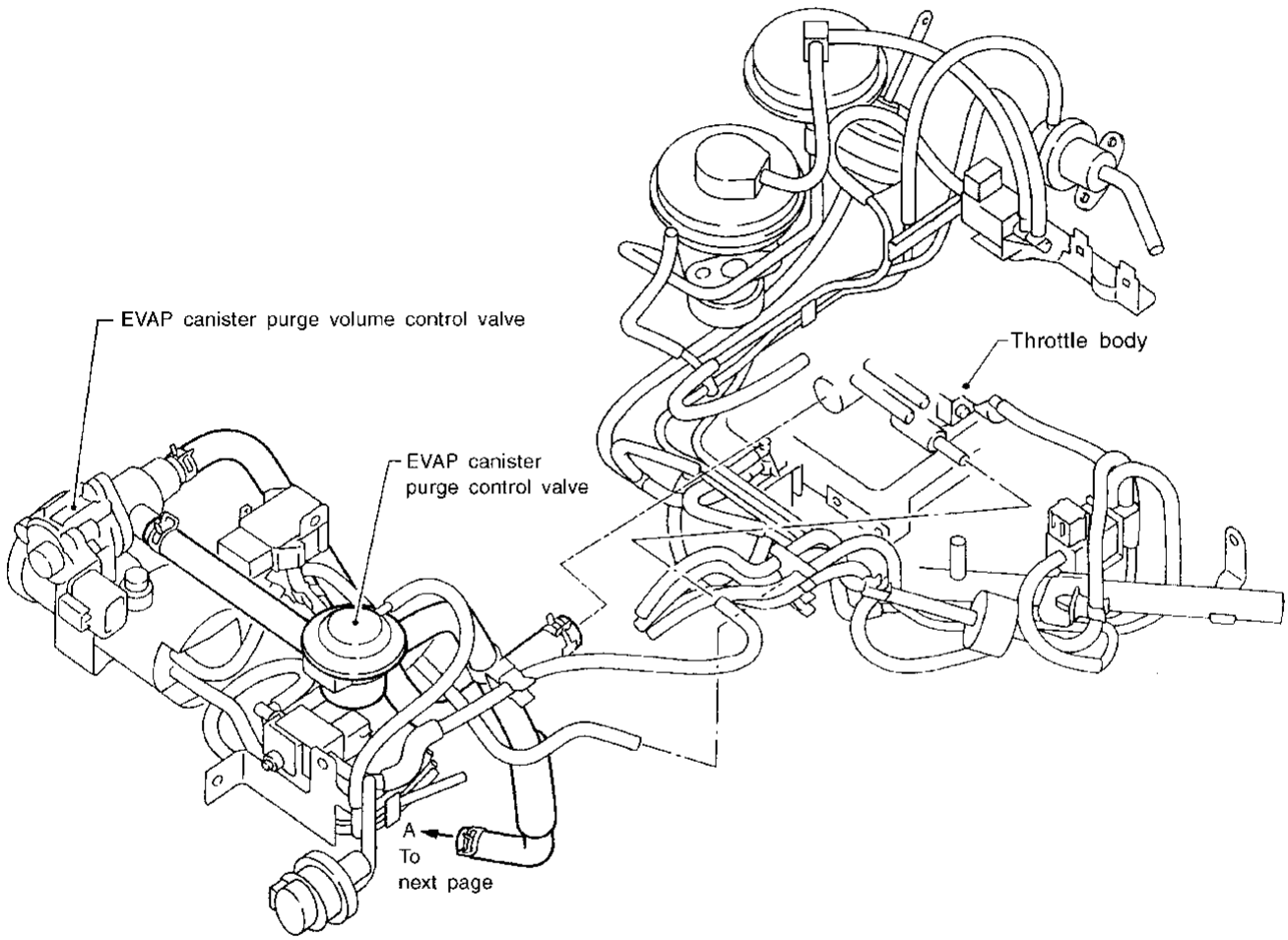

SEF233S

Evaporative Emission Line Drawing (Cont'd)

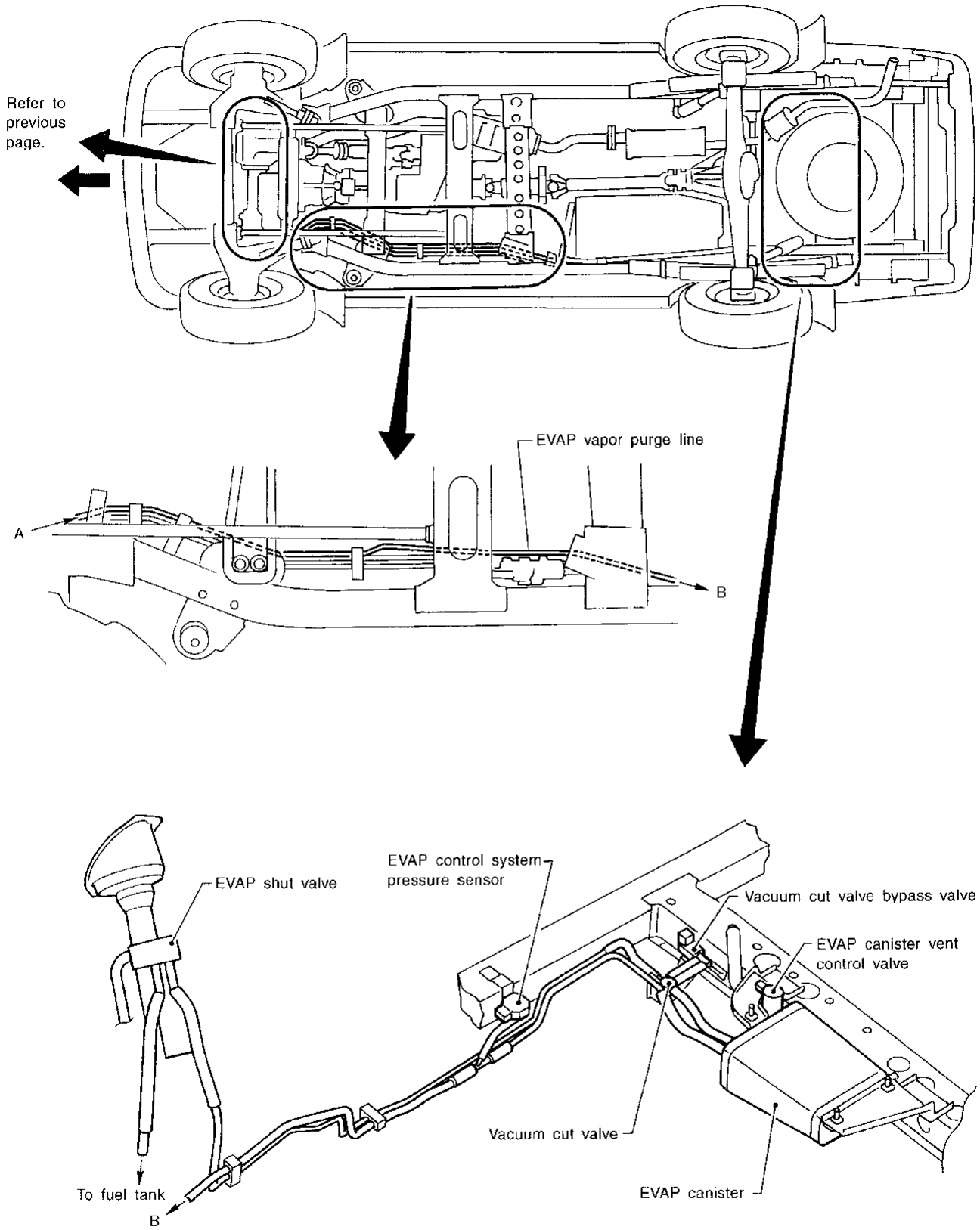

SEF234S

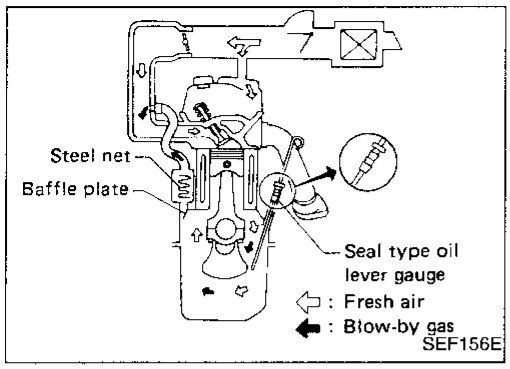

Description

This system returns blow-by gas to the intake manifold collector.
The positive crankcase ventilation (PCV) valve is provided to conduct crankcase blow-by gas to the intake manifold.
During partial throttle operation of the engine, the intake manifold sucks the blow-by gas through the PCV valve.
Normally, the capacity of the valve is sufficient to handle any blow-by and a small amount of ventilating air.
The ventilating air is then drawn from the air duct into the crankcase. In this process the air passes through the hose connecting air inlet tubes to the rocker cover.
Under full-throttle condition, the manifold vacuum is insufficient to draw the blow-by flow through the valve. The flow goes through the hose connection in the reverse direction.
On vehicles with an excessively high blow-by, the valve does not meet the requirement. This is because some of the flow will go through the hose connection to the intake collector under all conditions.

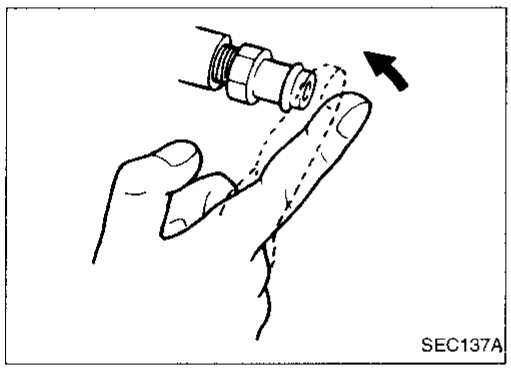

Inspection

PCV (Positive Crankcase Ventilation) VALVE

With engine running at idle, remove PCV valve from breather separator. A properly working valve makes a hissing noise as air passes through it. A strong vacuum should be felt immediately when a finger is placed over the valve inlet.

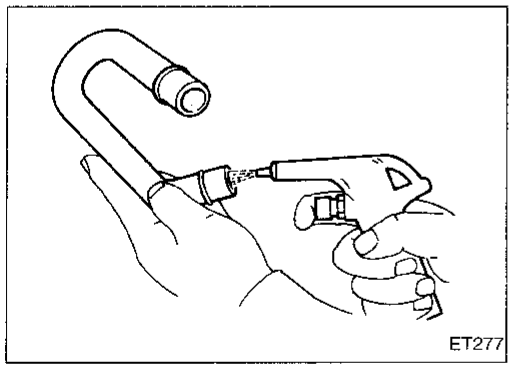

PCV HOSE

1. Check hoses and hose connections for leaks.
2. Disconnect all hoses and clean with compressed air. If any hose cannot be freed of obstructions, replace.

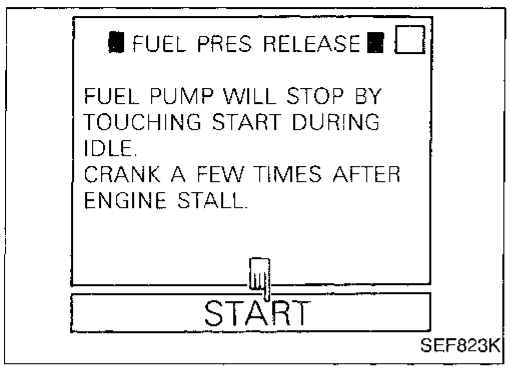

Fuel Pressure Release

Before disconnecting fuel line, release fuel pressure from fuel line to eliminate danger.

1. Start engine.
2. Perform "FUEL PRESSURE RELEASE" in "WORK SUPPORT" mode with CONSULT.
   (Touch "START", and after engine stalls, crank it two or three times to release all fuel pressure.)
3. Turn ignition switch OFF.

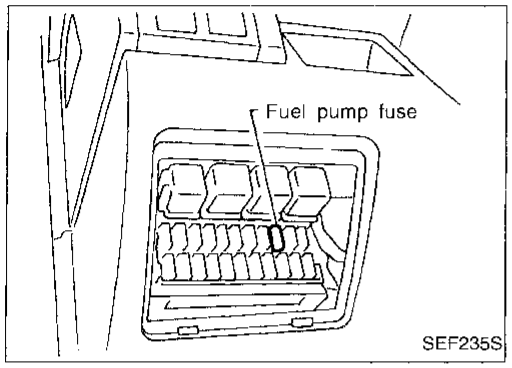

1. Remove fuse for fuel pump.
2. Start engine.
3. After engine stalls, crank it two or three times to release all fuel pressure.
4. Turn ignition switch OFF and reinstall fuel pump fuse.

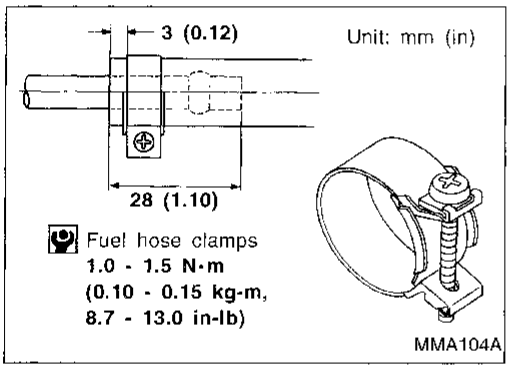

Fuel Pressure Check

a. When reconnecting fuel line, always use new clamps.
b. Make sure that clamp screw does not contact adjacent parts.
c. Use a torque driver to tighten clamps.
d. Use Pressure Gauge to check fuel pressure.

1. Release fuel pressure to zero.
2. Disconnect fuel hose between fuel filter and fuel tube (engine side).
3. Install pressure gauge between fuel filter and fuel tube.
4. Start engine and check for fuel leakage.

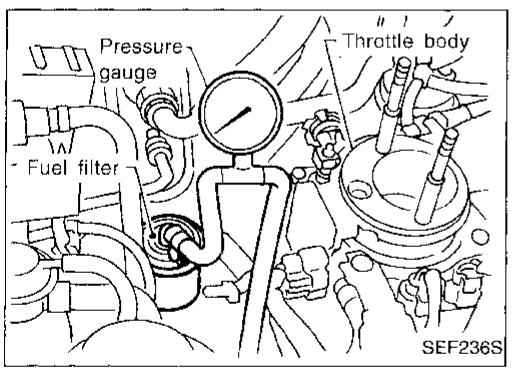

5. Read the indication of fuel pressure gauge.
   At idling:
   Approximately 235 kPa (2.4 kg/cm^2, 34 psi)
   A few seconds after ignition switch is turned OFF to ON:
   Approximately 294 kPa (3.0 kg/cm^2, 43 psi)
6. Stop engine and disconnect fuel pressure regulator vacuum hose from intake manifold.
7. Plug intake manifold with a rubber cap.
8. Connect variable vacuum source to fuel pressure regulator.

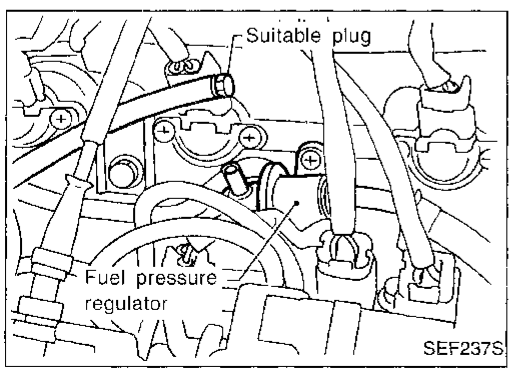

Fuel Pressure Check (Cont'd)

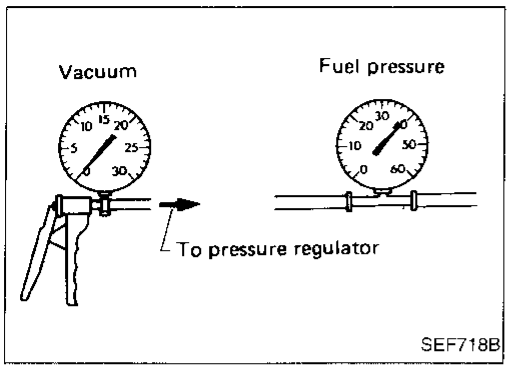

9. Start engine and read indication of fuel pressure gauge as vacuum is changed.

Fuel pressure should decrease as vacuum increases. If results are unsatisfactory, replace fuel pressure regulator.

Injector Removal and Installation

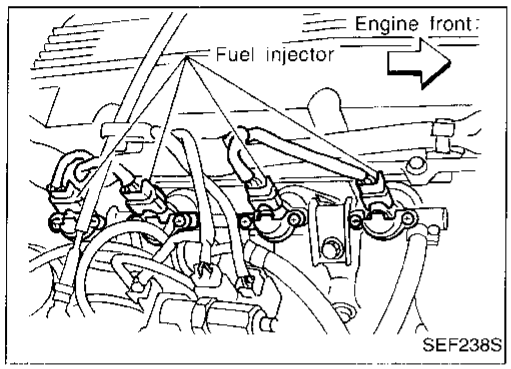

1. Release fuel pressure to zero.
2. Remove injector tube assembly with injectors from intake manifold.
3. Remove injectors from injector tube assembly.
- Push injector tail piece.
- Do not pull on the connector.

4. Install injector to fuel tube assembly.

a. Clean exterior of injector tail piece.
b. Use new O-rings.

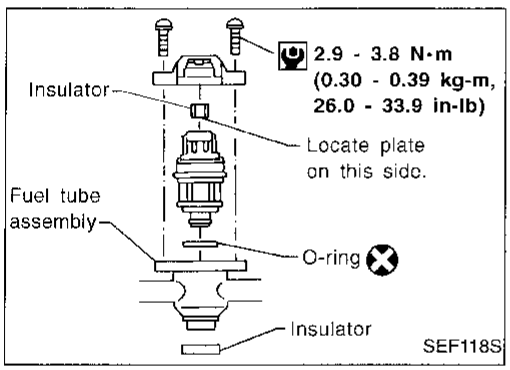

Always replace O-rings with new ones.
Lubricate O-rings with a smear of engine oil.

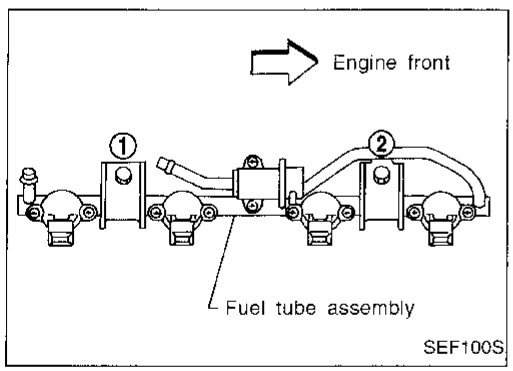

5. Install injectors with fuel tube assembly to intake manifold.

Tighten in numerical order shown in the figure.

a. First, tighten all bolts to 9.3 to 10.8 N·m (0.95 to 1.1 kg-m, 6.9 to 8.0 ft-lb).
b. Then, tighten all bolts to 21 to 26 N·m (2.1 to 2.7 kg-m, 15 to 20 ft-lb).

6. Install fuel hoses to fuel tube assembly.
7. Reinstall any parts removed in reverse order of removal.

CAUTION:
After properly connecting injectors to fuel tube assembly, check connections for fuel leakage.

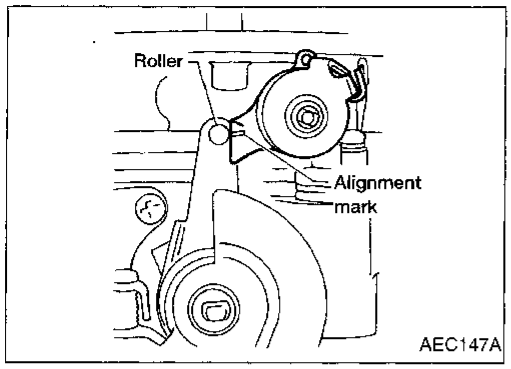

Fast Idle Cam (FIC) Inspection and Adjustment

1. Remove air cleaner assembly.
2. Make sure the FIC alignment mark is centered on the lever roller as shown in the figure.

- An alignment mark is stamped on the FIC so that the top of the cam will face in the correct direction.

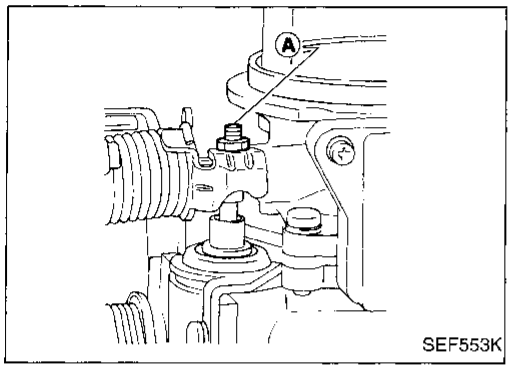

- If necessary, adjust the FIC screw Ⓐ until the alignment mark is centered on the lever roller.

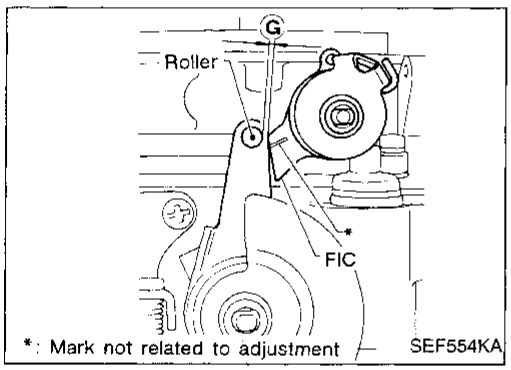

3. Start engine and warm up to operating temperature.
4. Measure clearance Ⓖ between the lever roller and the top of the FIC using a feeler gauge as shown in the figure.

   Clearance Ⓖ:

   M/T model

   2.0 - 2.6 mm (0.079 - 0.102 in)

   A/T model

   1.8 - 2.4 mm (0.071 - 0.094 in)

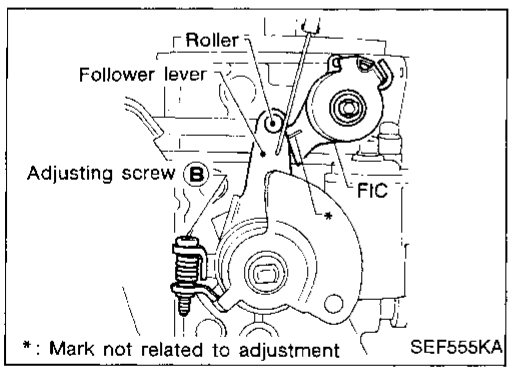

- If clearance Ⓖ is out of specification, adjust clearance Ⓖ using adjusting screw Ⓑ to 2.3 mm (0.091 in) (M/T) or 2.1 mm (0.083 in) (A/T).

Idle Speed/Ignition Timing/Idle Mixture Ratio Adjustment

PREPARATION

- Make sure that the following parts are in good order.

(1) Battery
(2) Ignition system
(3) Engine oil and coolant levels
(4) Fuses
(5) ECM harness connector
(6) Vacuum hoses
(7) Air intake system
(Oil filler cap, oil level gauge, etc.)
(8) Fuel pressure
(9) Engine compression
(10) EGR valve operation
(11) Throttle valve
(12) Evaporative emission (EVAP) canister purge control valve

- On air conditioner equipped models, checks should be carried out while the air conditioner is "OFF".
- When checking idle speed, ignition timing and mixture ratio of A/T models, shift lever to "N" position.
- When measuring "CO" percentage, insert probe more than 40 cm (15.7 in) into tail pipe.
- Turn off headlamps, heater blower, rear window defogger.
- Keep front wheels pointed straight ahead.
- Make the check after the cooling fan has stopped.

Overall inspection sequence

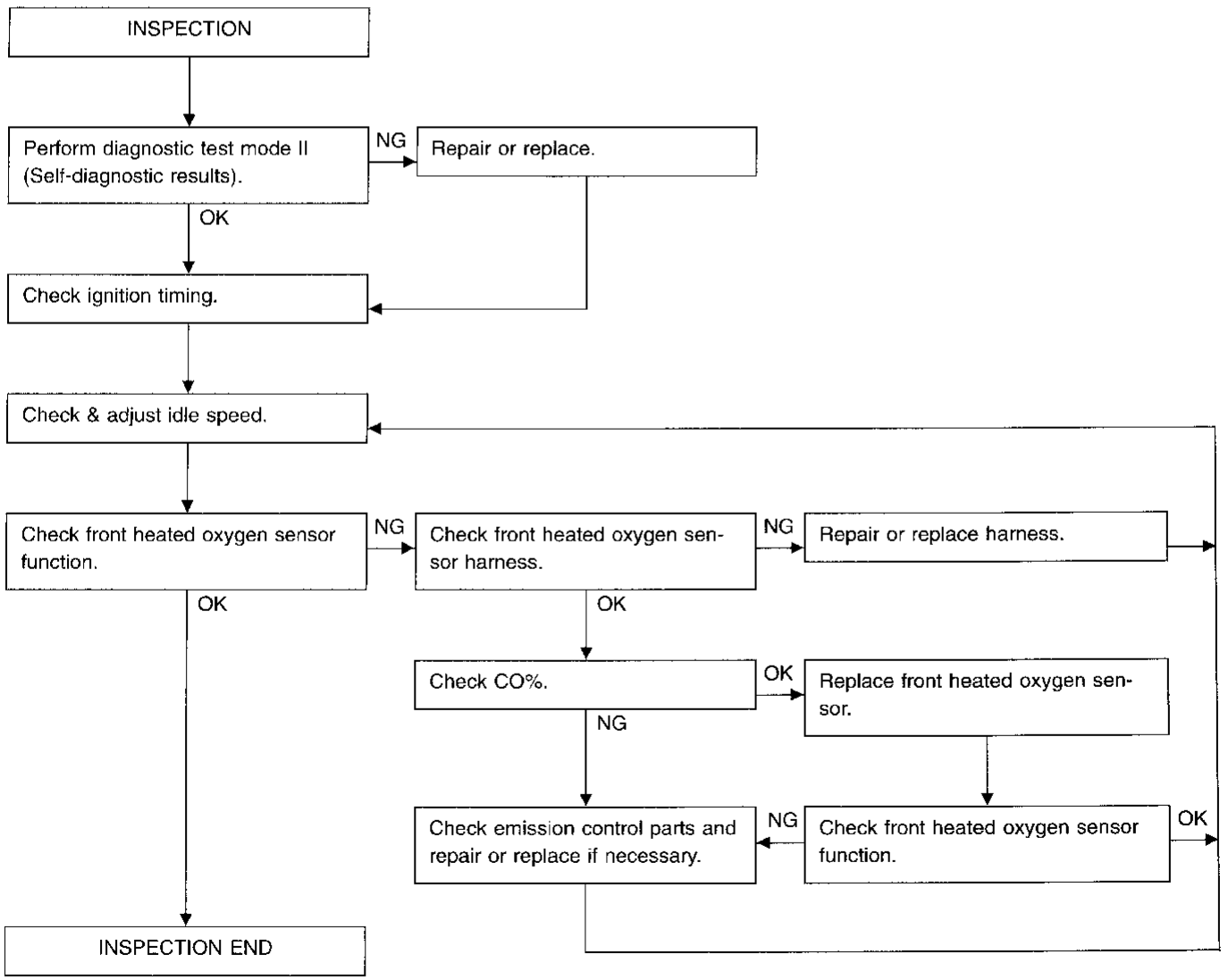

Idle Speed/Ignition Timing/Idle Mixture Ratio Adjustment (Cont'd)

A

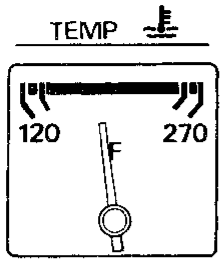

SEF246F

B

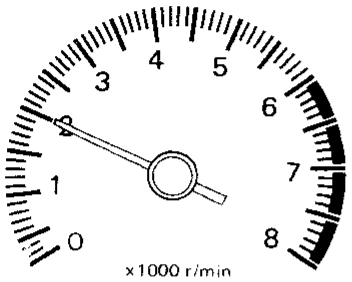

SEF247F

C

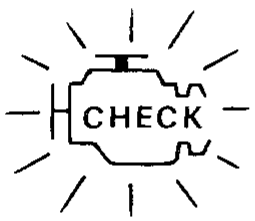

Malfunction indicator lamp

SEF051PA

D

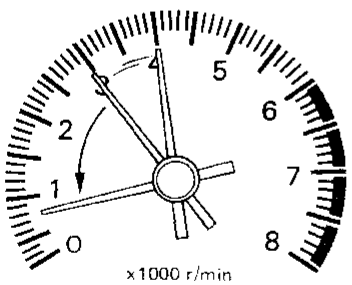

SEF248F

E

■ IGN TIMING ADJ ■ □

IGNITION TIMING FEEDBACK CONTROL WILL BE HELD BY TOUCHING START.
AFTER DOING SO, ADJUST IGNITION TIMING WITH A TIMING LIGHT BY TURNING THE CAMSHAFT POSITION SENSOR.

START

SEF546N

START

Visually check the following:
- Air cleaner clogging
- Hoses and ducts for leaks
- EGR valve operation
- Electrical connectors
- Gasket
- Throttle valve and throttle position sensor operations

A

Start engine and warm it up until engine coolant temperature indicator points to the middle of gauge and ensure that engine speed is below 1,000 rpm.

B

Open engine hood and run engine at about 2,000 rpm for about 2 minutes under no-load.

C

Perform the diagnostic test mode II (Self-diagnostic results).

OK → **D**

NG → Repair or replace components as necessary. → **D**

D

Run engine at about 2,000 rpm for about 2 minutes under no-load.
Rev engine two or three times under no-load, then run engine for about 1 minute at idle speed.

E

1. Select "IGNITION TIMING ADJ" in WORK SUPPORT mode.
2. Touch "START".

1. Stop engine and disconnect throttle position sensor harness connector.
2. Start engine.

Rev engine (2,000 - 3,000 rpm) 2 or 3 times under no-load and run engine at idle speed.

F

Check ignition timing with a timing light.

M/T: 10°±2° BTDC
A/T: 10°±2° BTDC (in "N" position)

OK → Ⓐ (Go to next page.)

NG → Ⓑ (Go to next page.)

Idle Speed/Ignition Timing/Idle Mixture Ratio Adjustment (Cont'd)

F

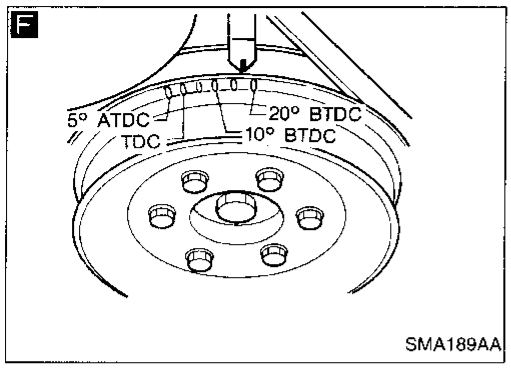

SMA189AA

G

■ IGN TIMING ADJ ■

IGNITION TIMING FEEDBACK CONTROL WILL BE HELD BY TOUCHING START.
AFTER DOING SO, ADJUST IGNITION TIMING WITH A TIMING LIGHT BY TURNING THE CAMSHAFT POSITION SENSOR.

START

SEF546N

H

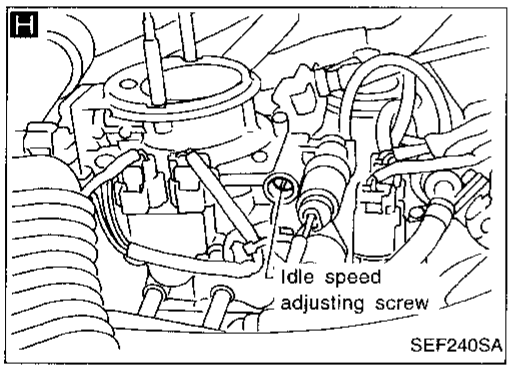

SEF240SA

I

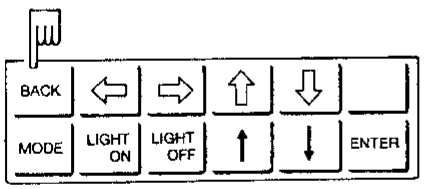

SEF913J

J

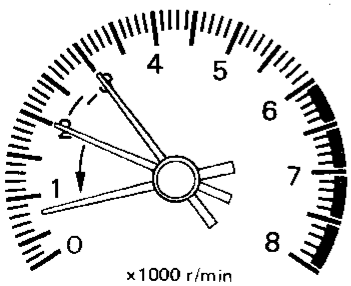

SEF602K

Ⓐ

Ⓑ

Adjust ignition timing to the specified value by turning distributor after loosening bolts which secure distributor.

M/T: 10°±2° BTDC
A/T: 10°±2° BTDC (in "N" position)

Ⓕ

1. Select "IGNITION TIMING ADJ" in WORK SUPPORT mode.
2. Touch "START".

1. Stop engine and disconnect throttle position sensor harness connector.
2. Start engine.

G

Check base idle speed.

Read idle speed in "IGN TIMING ADJ" mode with CONSULT.

Check idle speed.

M/T: 750±50 rpm
A/T: 750±50 rpm (in "N" position)

OK

NG

Rev engine (2,000 - 3,000 rpm) 2 or 3 times under no-load and run engine at idle speed.

H

Adjust base idle speed by turning idle speed adjusting screw.

M/T: 750±50 rpm
A/T: 750±50 rpm (in "N" position)

I

Touch "Back".

1. Stop engine and connect throttle position sensor harness connector.
2. Start engine.

J

Rev engine (2,000 - 3,000 rpm) 2 or 3 times under no-load and run engine at idle speed.

Ⓒ

(Go to next page.)

Idle Speed/Ignition Timing/Idle Mixture Ratio Adjustment (Cont'd)

K

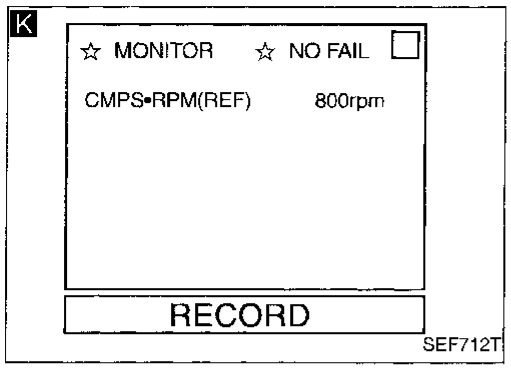

L

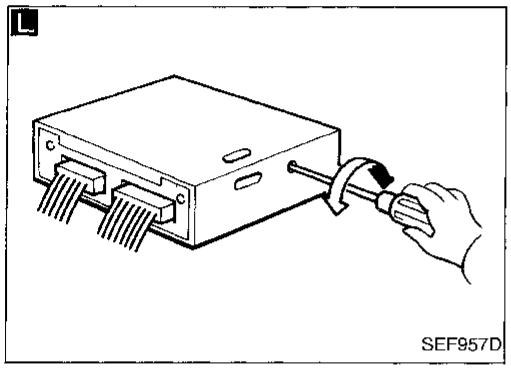

M

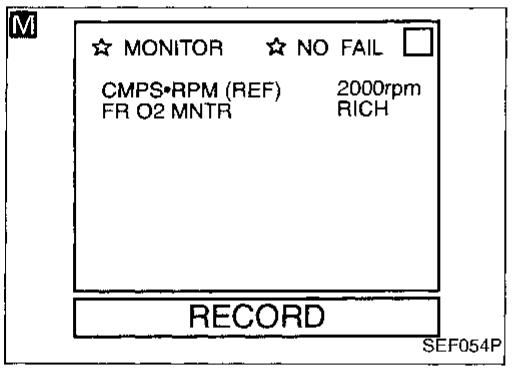

N

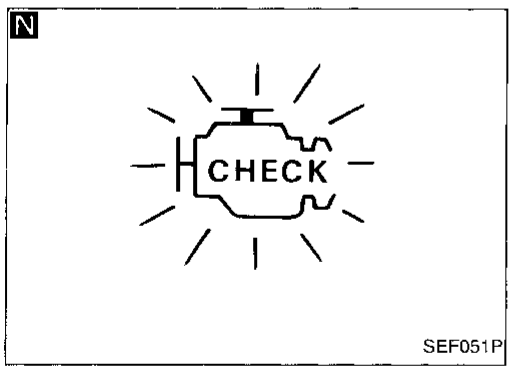

Ⓒ

K

Check target idle speed.

Read idle speed in "DATA MONITOR" mode with CONSULT.

OR

Check idle speed.

M/T: 800±50 rpm
A/T: 800±50 rpm (in "N" position)

OK → **L**

NG → Check IACV-AAC valve and replace if necessary.

→ Check IACV-AAC valve harness and repair if necessary.

→ Check ECM function* by substituting another known good ECM.

* ECM may be the cause of a problem, but this is rarely the case.

L

Set the diagnostic test mode II (front heated oxygen sensor monitor).

→ Run engine at about 2,000 rpm for about 2 minutes under no-load.

M N

Check front heated oxygen sensor signal.

1. See "FR O2 MNTR" in "DATA MONITOR" mode.
2. Maintaining engine at 2,000 rpm under no-load (engine is warmed up sufficiently), check that the monitor fluctuates between "LEAN" and "RICH" more than 5 times during 10 seconds.
   1 cycle: RICH → LEAN → RICH
   2 cycles: RICH → LEAN → RICH → LEAN → RICH

NG → Ⓓ (Go to next page.)

OR

Make sure that malfunction indicator lamp goes on and off more than 5 times during 10 seconds at 2,000 rpm.

OK → INSPECTION END

Idle Speed/Ignition Timing/Idle Mixture Ratio Adjustment (Cont'd)

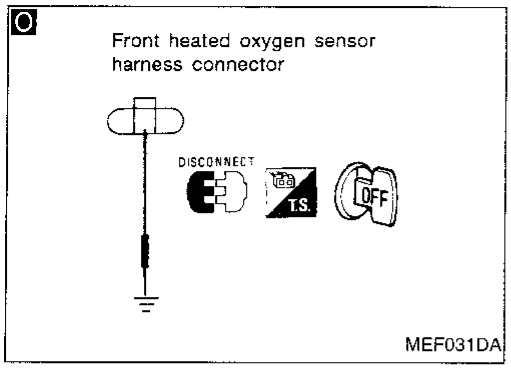

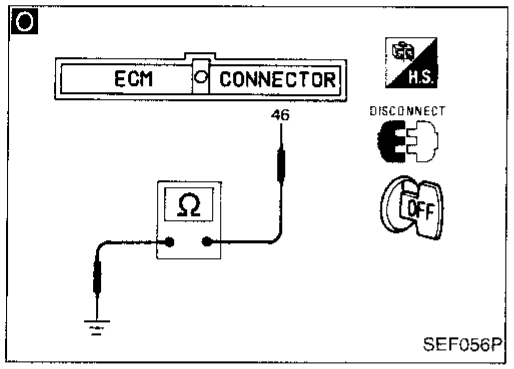

Ⓓ

Check front heated oxygen sensor harness:
1. Turn off engine and disconnect battery ground cable.
2. Disconnect ECM harness connector from ECM.
3. Disconnect front heated oxygen sensor harness connector and connect terminal for front heated oxygen sensor to ground with a jumper wire.
4. Check for continuity between terminal (46) of ECM harness connector and ground metal on vehicle body.

Continuity exists ... OK
Continuity does not exist ... NG

OK → Connect ECM harness connector to ECM.

NG → Repair harness. → Ⓕ (Go to EC-30.)

Connect ECM harness connector to ECM.

1. Select "ENG COOLANT TEMP" in "ACTIVE TEST" mode.
2. Set "COOLANT TEMP" at 5°C (41°F).

- Disconnect engine coolant temperature sensor harness connector.
- Connect a resistor (4.4 kΩ) between terminals of engine coolant temperature sensor harness connector.

Start engine and warm it up until engine coolant temperature indicator points to the middle of gauge. (Be careful to start engine after setting "COOLANT TEMP" or installing a 4.4 kΩ resistor.)

Rev engine two or three times under no-load then run engine at idle speed.

Ⓔ

(Go to next page.)

Idle Speed/Ignition Timing/Idle Mixture Ratio Adjustment (Cont'd)

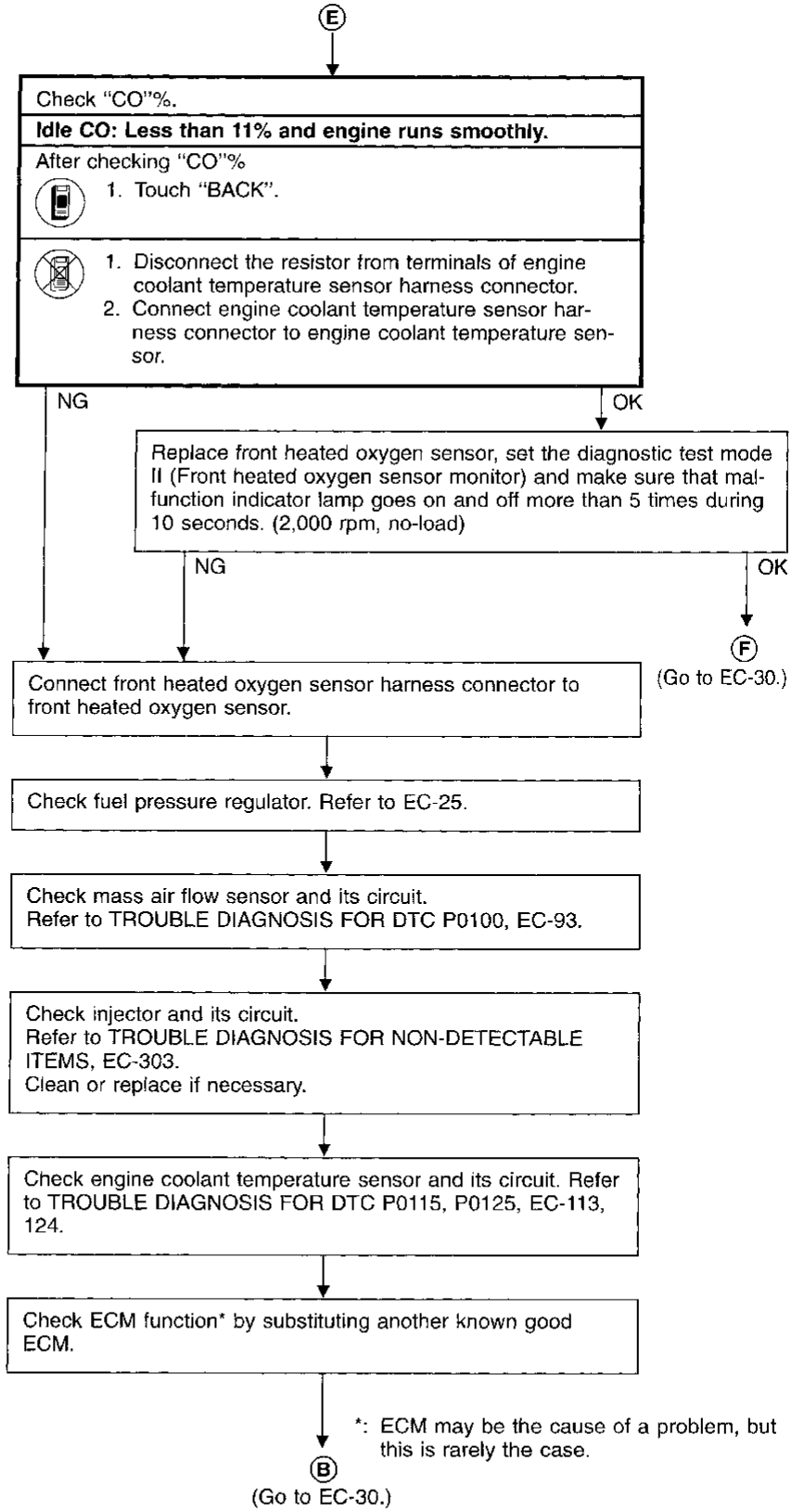

- **If a vehicle contains a part which is operating outside of design specifications with no MIL illumination, the part shall not be replaced prior to emission testing unless it is determined that the part has been tampered with or abused in such a way that the diagnostic system cannot reasonably be expected to detect the resulting malfunction.**

Introduction

The ECM (ECCS control module) has an on board diagnostic system, which detects malfunctions related to engine sensors or actuators. The ECM also records various emission-related diagnostic information. Including:

- Diagnostic Trouble Code (DTC) ..... Mode 3 of SAE J1979
- Freeze Frame data ..... Mode 2 of SAE J1979
- System Readiness Test (SRT) code ..... Mode 1 of SAE J1979
- 1st Trip Diagnostic Trouble Code (1st Trip DTC) ..... Mode 7 of SAE J1979
- 1st Trip Freeze Frame data
- Test values and Test limits ..... Mode 6 of SAE J1979

The above information can be checked using procedures listed in the table below.

	DTC	1st trip DTC	Freeze Frame data	1st trip Freeze Frame data	SRT code	Test value
Diagnostic test mode II (Self-diagnostic results)	○	○*1				
CONSULT	○	○	○	○	○	○
GST	○	○*2	○		○	○

*1: When DTC and 1st trip DTC simultaneously appear on the display, they cannot be clearly distinguished from each other.
*2: 1st trip DTCs for self-diagnoses concerning SRT items cannot be shown on the GST display.

The malfunction indicator lamp (MIL) on the instrument panel lights up when the same malfunction is detected in two consecutive trips (Two trip detection logic), or when the ECM enters fail-safe mode (Refer to EC-76.).

Two Trip Detection Logic

When a malfunction is detected for the first time, 1st trip DTC and 1st trip Freeze Frame data are stored in the ECM memory. The MIL will not light up at this stage. ⟨1st trip⟩
If the same malfunction is detected again during the next drive, the DTC and Freeze Frame data are stored in the ECM memory, and the MIL lights up. The MIL lights up at the same time when the DTC is stored. ⟨2nd trip⟩ The "trip" in the "Two Trip Detection Logic" means a driving mode in which self-diagnosis is performed during vehicle operation. Specific on board diagnostic items will cause the ECM to light up or blink the MIL and store DTC and Freeze Frame data, even in the 1st trip, as shown below.

Items	MIL			DTC		1st trip DTC	
	1st trip		2nd trip lighting up	1st trip displaying	2nd trip displaying	1st trip displaying	2nd trip displaying
	Blinking	Lighting up					
Misfire (Possible three way catalyst damage) — DTC: P0300 - P0304 (0701, 0605 - 0608) is being detected	X			X		X	
Misfire (Possible three way catalyst damage) — DTC: P0300 - P0304 (0701, 0605 - 0608) has been detected		X		X		X	
Closed loop control — DTC: P0130 (0307)		X		X		X	
Fail-safe items (Refer to EC-76.)		X		X*1		X*1	
Except above			X		X	X	X

*1: Except "ECM".

Emission-related Diagnostic Information

DTC AND 1ST TRIP DTC

The 1st trip DTC (whose number is the same as the DTC number) is displayed for the latest self-diagnostic result obtained. If the ECM memory was cleared previously, and the 1st trip DTC did not reoccur, the 1st trip DTC will not be displayed. If a malfunction is detected during the 1st trip, the 1st trip DTC is stored in the ECM memory. The MIL will not light up (two trip detection logic). If the same malfunction is not detected in the 2nd trip (meeting the required driving pattern), the 1st trip DTC is cleared from the ECM memory. If the same malfunction is detected in the 2nd trip, both the 1st trip DTC and DTC are stored in the ECM memory and the MIL lights up. In other words, the DTC is stored in the ECM memory and the MIL lights up when the same malfunction occurs in two consecutive trips. If a 1st trip DTC is stored and a non-diagnostic operation is performed (for example, driving pattern A, refer to EC-52) between the 1st and 2nd trips, only the 1st trip DTC will continue to be stored. For malfunctions that blink or light up the MIL during the 1st trip, the DTC and 1st trip DTC are stored in the ECM memory.
Procedures for clearing the DTC and the 1st trip DTC from the ECM memory are described in "HOW TO ERASE EMISSION-RELATED DIAGNOSTIC INFORMATION". Refer to EC-43.
For malfunctions in which 1st trip DTCs are displayed, refer to EC-41. These items are required by legal regulation to continuously monitor the system/component. In addition, the items monitored non-continuously are also displayed on CONSULT.
1st trip DTC is specified in Mode 7 of SAE J1979. 1st trip DTC detection occurs without lighting up the MIL and therefore does not warn the driver of a problem. However, 1st trip DTC detection will not prevent the vehicle from being tested, for example during Inspection/Maintenance (I/M) tests.
When a 1st trip DTC is detected, check, print out or write down and erase (1st trip) DTC and Freeze Frame data as specified in "Work Flow" procedure Step II, refer to page EC-70. Then perform "DTC confirmation procedure" or "Overall function check" to try to duplicate the problem. If the malfunction is duplicated, the item requires repair.

How to read DTC and 1st trip DTC

DTC and 1st trip DTC can be read by the following methods.

1. The number of blinks of the malfunction indicator lamp in the Diagnostic Test Mode II (Self-Diagnostic Results) Examples: 0101, 0201, 1003, 1104, etc.
   These DTCs are controlled by NISSAN.
2. CONSULT or GST (Generic Scan Tool) Examples: P0340, P1320, P0705, P0750, etc.
   These DTCs are prescribed by SAE J2012.
   (CONSULT also displays the malfunctioning component or system.)

- **1st trip DTC No. is the same as DTC No.**
- **Output of a DTC indicates a malfunction. However, Mode II and GST do not indicate whether the malfunction is still occurring or has occurred in the past and has returned to normal.**
  CONSULT can identify malfunction status as shown below. Therefore, using CONSULT (if available) is recommended.

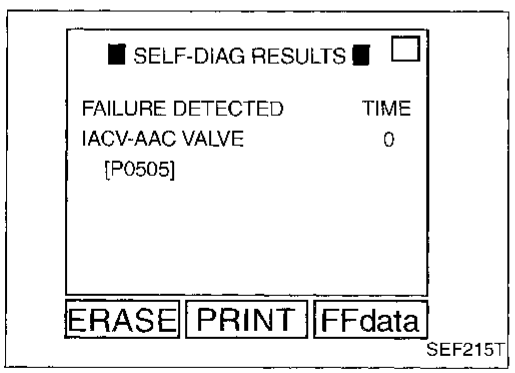

A sample of CONSULT display for DTC is shown at left. DTC or 1st trip DTC of a malfunction is displayed in SELF-DIAGNOSTIC RESULTS mode of CONSULT. Time data indicates how many times the vehicle was driven after the last detection of a DTC.
If the DTC is being detected currently, the time data will be "0".

Emission-related Diagnostic Information (Cont'd)

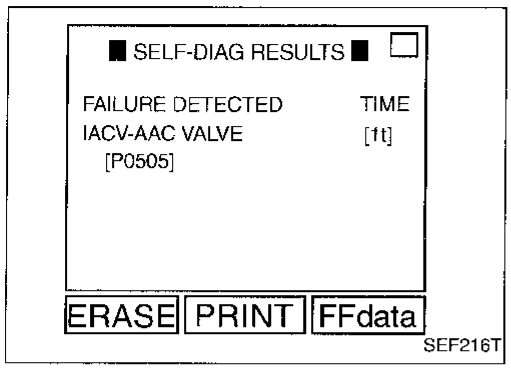

If a 1st trip DTC is stored in the ECM, the time data will be "[1t]".

FREEZE FRAME DATA AND 1ST TRIP FREEZE FRAME DATA

The ECM records the driving conditions such as fuel system status, calculated load value, engine coolant temperature, short term fuel trim, long term fuel trim, engine speed and vehicle speed at the moment a malfunction is detected.

Data which are stored in the ECM memory, along with the 1st trip DTC, are called 1st trip freeze frame data. The data, stored together with the DTC data, are called freeze frame data and are displayed on CONSULT or GST. The 1st trip freeze frame data can only be displayed on the CONSULT screen, not on the GST. For details, see EC-56.

Only one set of freeze frame data (either 1st trip freeze frame data or freeze frame data) can be stored in the ECM. 1st trip freeze frame data is stored in the ECM memory along with the 1st trip DTC. There is no priority for 1st trip freeze frame data and it is updated each time a different 1st trip DTC is detected. However, once freeze frame data (2nd trip detection/MIL on) is stored in the ECM memory, 1st trip freeze frame data is no longer stored. Remember, only one set of freeze frame data can be stored in the ECM. The ECM has the following priorities to update the data.

Priority	Items	
1	Freeze frame data	Misfire — DTC: P0300 - P0304 (0701, 0605 - 0608) Fuel Injection System Function — DTC: P0171 (0115), P0172 (0114)
2		Except the above items (Includes A/T related items)
3	1st trip freeze frame data	

For example, the EGR malfunction (Priority: 2) was detected and the freeze frame data was stored in the 2nd trip. After that when the misfire (Priority: 1) is detected in another trip, the freeze frame data will be updated from the EGR malfunction to the misfire. The 1st trip freeze frame data is updated each time a different malfunction is detected. There is no priority for 1st trip freeze frame data. However, once freeze frame data is stored in the ECM memory, 1st trip freeze frame data is no longer stored (because only one freeze frame data or 1st trip freeze frame data can be stored in the ECM). If freeze frame data is stored in the ECM memory and freeze frame data with the same priority occurs later, the first (original) freeze frame data remains unchanged in the ECM memory.

Both 1st trip freeze frame data and freeze frame data (along with the DTCs) are cleared when the ECM memory is erased. Procedures for clearing the ECM memory are described in "HOW TO ERASE EMISSION-RELATED DIAGNOSTIC INFORMATION". Refer to EC-43.

SYSTEM READINESS TEST (SRT) CODE

System Readiness Test (SRT) code is specified in Mode 1 of SAE J1979. It indicates whether the self-diagnostic tests for non-continuously monitored items have been completed or not.

Inspection/Maintenance (I/M) tests of the on board diagnostic (OBD) II system may become the legal requirement in some states/areas. All SRT codes must be set in this case. Unless all SRT codes are set, conducting the I/M test may not be allowed.

SRT codes are set after self-diagnosis has been performed two or more times. This occurs regardless of whether the diagnosis is in "OK" or "NG", and whether or not the diagnosis is performed in consecutive trips. The following table lists the 5 SRT items (9 test items) for the ECCS used in D21 models.

Emission-related Diagnostic Information (Cont'd)

SRT items	Self-diagnostic test items
Catalyst monitoring	• Three way catalyst function P0420 (0702)
EVAP system monitoring	• EVAP control system (Small Leak) P0440 (0705) • EVAP control system purge flow monitoring P1447 (0111)
Oxygen sensor monitoring	• Front heated oxygen sensor P0130 (0503) • Rear heated oxygen sensor P0136 (0707)
Oxygen sensor heater monitoring	• Front heated oxygen sensor heater P0135 (0901) • Rear heated oxygen sensor heater P0141 (0902)
EGR system monitoring	• EGR function P0400 (0302) • EGRC-BPT valve function P0402 (0306)

Together with the DTC, the SRT code is cleared from the ECM memory using the method described later (Refer to EC-43). In addition, after ECCS components/systems are repaired or if the battery terminals remain disconnected for more than 24 hours, all SRT codes may be cleared from the ECM memory.

How to display SRT code

1. Selecting "SRT" in "SRT-OBD TEST VALUE" mode with CONSULT
   For items whose SRT codes are set, a "CMPLT" is displayed on the CONSULT screen; for items whose SRT codes are not set, "INCMP" is displayed.

2. Selecting Mode 1 with GST (Generic Scan Tool)

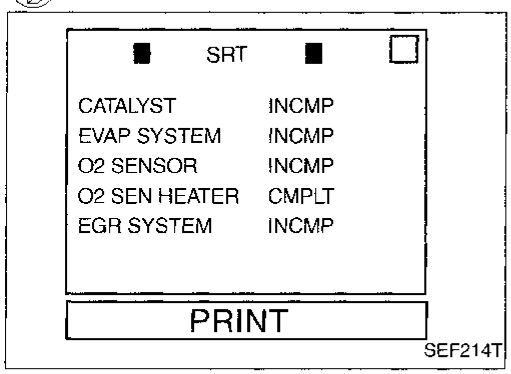

A sample of CONSULT display for SRT code is shown at left. "INCMP" means the self-diagnosis is incomplete and SRT is not set. "CMPLT" means the self-diagnosis is complete and SRT is set.

How to set SRT code

To set all SRT codes, self-diagnosis for the items indicated above must be performed two or more times. Each diagnosis may require a long period of actual driving under various conditions. The most efficient driving pattern in which SRT codes can be properly set is explained on the next page. The driving pattern should be performed two times or more to set all SRT codes.

Emission-related Diagnostic Information (Cont'd)

Driving pattern

Note: Always drive vehicle in safe manner according to traffic conditions and obey all traffic laws.
Refer to next page for more information and explanation of chart.

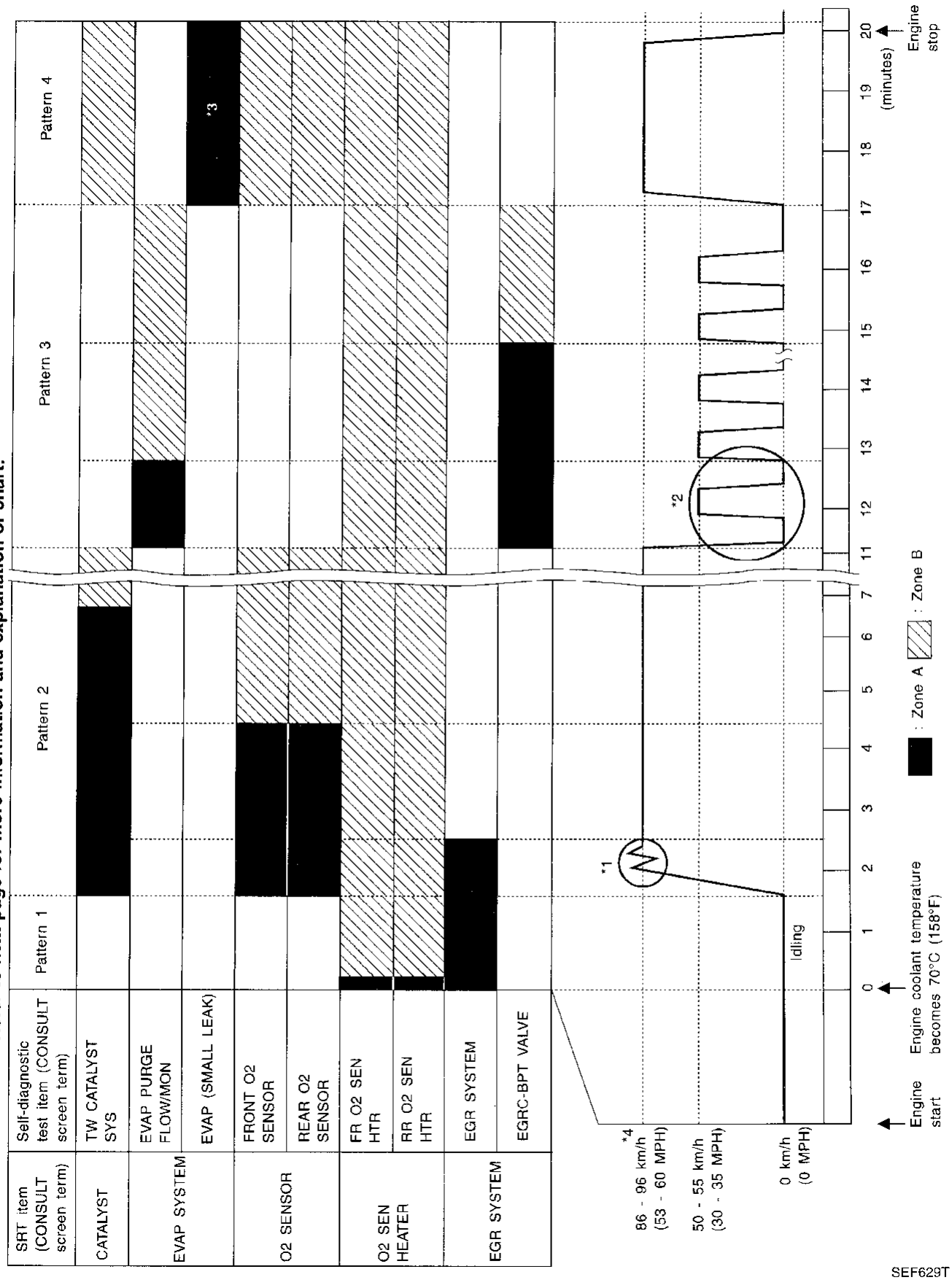

SEF629T

Emission-related Diagnostic Information (Cont'd)

- The time required for each diagnosis varies with road surface conditions, weather, altitude, individual driving habits, etc.
  Zone A refers to the range where the time required, for the diagnosis under normal conditions*, is the shortest. Zone B refers to the range where the diagnosis can still be performed if the diagnosis is not completed within zone A.

*: Normal conditions refer to the following:
- Sea level
- Flat road
- Ambient air temperature: 20 - 30°C (68 - 86°F)
- Diagnosis is performed as quickly as possible under normal conditions.
  Under different conditions [For example: ambient air temperature other than 20 - 30°C (68 - 86°F)], diagnosis may also be performed.

Pattern 1:
- **The engine is started at the engine coolant temperature of –10 to 35°C (14 to 95°F) (where the voltage between the ECM terminals (51) and (43) is 3.0 - 4.3V).**
- **The engine must be operated at idle speed until the engine coolant temperature is greater than 70°C (158°F) (where the voltage between the ECM terminals (51) and (43) is lower than 1.4V).**

Pattern 2:
- When steady-state driving is performed again even after it is interrupted, each diagnosis can be conducted. In this case, the time required for diagnosis may be extended.

Pattern 3:
- The driving pattern outlined in *2 must be repeated at least 3 times.
  On M/T models, shift gears following "suggested upshift speeds" schedule at right.

Pattern 4:
- Tests are performed after the engine has been operated for at least 12 minutes.
- The accelerator pedal must be held very steady during steady-state driving.
- If the accelerator pedal is moved, the test must be conducted all over again.

*1: Depress the accelerator pedal until vehicle speed is 90 km/h (56 MPH), then release the accelerator pedal and keep it released for more than 10 seconds. Depress the accelerator pedal until vehicle speed is 90 km/h (56 MPH) again.

*2: Operate the vehicle in the following driving pattern.
1) Decelerate vehicle to 0 km/h and let engine idle.
2) Repeat driving pattern shown below at least 10 times.
   - **During acceleration, hold the accelerator pedal as steady as possible. (The THRTL POS SEN value of CONSULT should be between 0.8 to 1.2V.)**
3) Repeat steps 1 and 2 until the EGR system SRT is set.

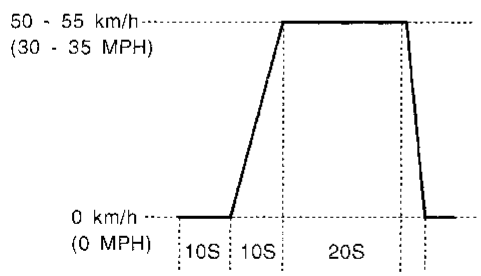

SEF414S

*3: The driving pattern may be omitted when EVAP (SMALL LEAK) checks are performed using the FUNCTION TEST mode of CONSULT.

*4: Checking the vehicle speed with CONSULT or GST is advised.

Suggested transmission gear position for A/T models

Set the selector lever in the "D" position with the overdrive switch turned ON.

Suggested upshift speeds for M/T models

Shown below are suggested vehicle speeds for shifting into a higher gear. These suggestions relate to fuel economy and vehicle performance. Actual upshift speeds will vary according to road conditions, weather and individual driving habits.

For normal acceleration in low altitude areas [less than 1,219 m (4,000 ft)]:

Gear change	ACCEL shift point km/h (MPH)	CRUISE shift point km/h (MPH)
1st to 2nd	24 (15)	23 (14)
2nd to 3rd	40 (25)	28 (17)
3rd to 4th	65 (40)	44 (27)
4th to 5th	75 (45)	61 (38)

For high altitude areas [over 1,219 m (4,000 ft)] and quick acceleration in low altitude areas:

Gear change	km/h (MPH)
1st to 2nd	24 (15)
2nd to 3rd	40 (25)
3rd to 4th	64 (40)
4th to 5th	72 (45)

Suggested maximum speed in each gear

Downshift to a lower gear if the engine is not running smoothly, or if you need to accelerate.
Do not exceed the maximum suggested speed (shown below) in any gear. For level road driving, use the highest gear suggested for that speed. Always observe posted speed limits and drive according to the road conditions to ensure safe operation. Do not over-rev the engine when shifting to a lower gear as it may cause engine damage or loss of vehicle control.

Gear	km/h (MPH)	
	2WD models	4WD models (2H position)
1st	50 (30)	40 (25)
2nd	90 (55)	70 (43)
3rd	130 (80)	110 (68)
4th	—	
5th	—	

Emission-related Diagnostic Information (Cont'd)

TEST VALUE AND TEST LIMIT

The following is the information specified in Mode 6 of SAE J1979.
The test value is a parameter used to determine whether a system/circuit diagnostic test is "OK" or "NG" while being monitored by the ECM during self-diagnosis. The test limit is a reference value which is specified as the maximum or minimum value and is compared with the test value being monitored.
Items for which these data (test value and test limit) are displayed are the same as SRT code items (9 test items).
These data (test value and test limit) are specified by Test ID (TID) and Component ID (CID) and can be displayed on the CONSULT screen or GST.

X: Applicable
—: Not applicable

SRT item (CONSULT display)	Self-diagnostic test item	Test value			Test limit	Application
		GST display		CONSULT display		
		TID	CID			
CATALYST	Warm-up three way catalyst function	01H	01H	Parameter 1	Max.	X
EVAP SYSTEM	EVAP control system (Small leak)	05H	03H	Parameter 1	Max.	X
	EVAP control system purge flow monitoring	06H	83H	Parameter 2	Min.	X
O2 SENSOR	Front heated oxygen sensor	09H	04H	Parameter 1	Max.	X
		0AH	84H	Parameter 2	Min.	X
		0BH	04H	Parameter 3	Max.	X
		0CH	04H	Parameter 4	Max.	X
		0DH	04H	Parameter 5	Max.	X
	Rear heated oxygen sensor	19H	86H	Parameter 6	Min.	X
		1AH	86H	Parameter 7	Min.	X
		1BH	06H	Parameter 8	Max.	X
		1CH	06H	Parameter 9	Max.	X
O2 SENSOR HEATER	Front heated oxygen sensor heater	29H	08H	Parameter 1	Max.	X
		2AH	88H	Parameter 1	Min.	X
	Rear heated oxygen sensor heater	2DH	0AH	Parameter 1	Max.	X
		2EH	8AH	Parameter 1	Min.	X
EGR SYSTEM	EGR function	31H	8CH	Parameter 1	Min.	X
		32H	8CH	Parameter 2	Min.	X
		33H	8CH	Parameter 3	Min.	X
		34H	8CH	Parameter 4	Min.	X
		35H	0CH	Parameter 5	Max.	X
	EGRC-BPT valve function	36H	0CH	Parameter 6	Max.	X
		37H	8CH	Parameter 7	Min.	X

Emission-related Diagnostic Information (Cont'd)

EMISSION-RELATED DIAGNOSTIC INFORMATION ITEMS

X: Applicable
—: Not applicable

Items (CONSULT screen terms)	DTC*3		SRT code	Test value/ Test limit	1st trip DTC	Reference page
	CONSULT GST*2	ECM*1				
NO SELF DIAGNOSTIC FAILURE INDICATED	**P0000**	**0505**	—	—	—	—
MASS AIR FLOW SEN	P0100	0102	—	—	X	EC-93
ABSOL PRESS SENSOR	P0105	0803	—	—	X	EC-100
INT AIR TEMP SEN	P0110	0401	—	—	X	EC-107
COOLANT TEMP SEN	P0115	0103	—	—	X	EC-113
THROTTLE POSI SEN	P0120	0403	—	—	X	EC-118
*COOLANT TEMP SEN	P0125	0908	—	—	X	EC-124
CLOSED LOOP	P0130	0307	—	—	X	EC-134
FRONT O2 SENSOR	P0130	0503	X	X	X*4	EC-129
FR O2 SEN HEATER	P0135	0901	X	X	X*4	EC-135
REAR O2 SENSOR	P0136	0707	X	X	X*4	EC-139
RR O2 SEN HEATER	P0141	0902	X	X	X*4	EC-143
FUEL SYS DIAG LEAN	P0171	0115	—	—	X	EC-148
FUEL SYS DIAG RICH	P0172	0114	—	—	X	EC-153
TANK FUEL TEMP SEN	P0180	0402	—	—	X	EC-158
MULTI CYL MISFIRE	P0300	0701	—	—	X	EC-162
CYL 1 MISFIRE	P0301	0608	—	—	X	EC-162
CYL 2 MISFIRE	P0302	0607	—	—	X	EC-162
CYL 3 MISFIRE	P0303	0606	—	—	X	EC-162
CYL 4 MISFIRE	P0304	0605	—	—	X	EC-162
CRANK POS SEN (OBD)	P0335	0802	—	—	X	EC-166
CAMSHAFT POSI SEN	P0340	0101	—	—	X	EC-171
EGR SYSTEM	P0400	0302	X	X	X*4	EC-176
EGRC-BPT VALVE	P0402	0306	X	X	X*4	EC-184
TW CATALYST SYS	P0420	0702	X	X	X*4	EC-186
EVAP (SMALL LEAK)	P0440	0705	X	X	X*4	EC-189
PURG CONT/V & S/V	P0443	0807	—	—	X	EC-199
VENT CONTROL VALVE	P0446	0903	—	—	X	EC-207
EVAP SYS PRES SEN	P0450	0704	—	—	X	EC-212

*1: In Diagnostic Test Mode II (Self-diagnostic results). These numbers are controlled by NISSAN.
*2: These numbers are prescribed by SAE J2012.
*3: 1st trip DTC No. is the same as DTC No.
*4: These are not displayed with GST.

Emission-related Diagnostic Information (Cont'd)

X: Applicable
—: Not applicable

Items (CONSULT screen terms)	DTC*3		SRT code	Test value/ Test limit	1st trip DTC	Reference page
	CONSULT GST*2	ECM*1				
VEHICLE SPEED SEN	P0500	0104	—	—	X	EC-217
IACV-AAC VALVE	P0505	0205	—	—	X	EC-221
CLOSED THRL POS SW	P0510	0203	—	—	X	EC-226
ECM	P0605	0301	—	—	X	EC-230
PARK/NEUT POSI SW	P0705	1003	—	—	X	EC-232
MAP/BARO SW SOL/V	P1105	1302	—	—	X	EC-237
SWIRL CONT S/V	P1130	1004	—	—	X	EC-243
SWIRL/V CONT VC SW	P1165	0112	—	—	X	EC-251
IGN SIGNAL-PRIMARY	P1320	0201	—	—	X	EC-256
CRANK P/S (OBD) COG	P1336	0905	—	—	X	EC-262
EGRC SOLENOID/V	P1400	1005	—	—	X	EC-267
EGR TEMP SENSOR	P1401	0305	—	—	X	EC-271
VC/V BYPASS/V	P1441	0801	—	—	X	EC-276
PURGE VOLUME CONT/V	P1445	1008	—	—	X	EC-281
EVAP PURGE FLOW/MON	P1447	0111	X	X	X*4	EC-288
TOR CONV CLUTCH S/V	P1550	0904	—	—	X	EC-295

*1: In Diagnostic Test Mode II (Self-diagnostic results). These numbers are controlled by NISSAN.
*2: These numbers are prescribed by SAE J2012.
*3: 1st trip DTC No. is the same as DTC No.
*4: These are not displayed with GST.

Emission-related Diagnostic Information (Cont'd)

HOW TO ERASE EMISSION-RELATED DIAGNOSTIC INFORMATION

The emission-related diagnostic information can be erased by the following methods.

Selecting "ERASE" in the "SELF-DIAG RESULTS" mode with CONSULT

Selecting Mode 4 with GST (Generic Scan Tool)

Changing the diagnostic test mode from Diagnostic Test Mode II to Mode I by turning the mode selector on the ECM (Refer to EC-46.)

- **If the battery is disconnected, the emission-related diagnostic information will be lost after approx. 24 hours.**
- **Erasing the emission-related diagnostic information using CONSULT or GST is easier and quicker than switching the mode selector on the ECM.**

The following data are cleared when the ECM memory is erased.

1. Diagnostic trouble codes
2. 1st trip diagnostic trouble codes
3. Freeze frame data
4. 1st trip freeze frame data
5. System readiness test (SRT) codes
6. Test values
7. Others

Actual work procedures are explained using a DTC as an example. Be careful so that not only the DTC, but all of the data listed above, are cleared from the ECM memory during work procedures.

How to erase DTC (With CONSULT)

Note: If the diagnostic trouble code is not for A/T related items (see EC-2), skip steps 2 through 4.

1. If the ignition switch stays "ON" after repair work, be sure to turn ignition switch "OFF" once. Wait at least 7 seconds and then turn it "ON" (engine stopped) again.
2. Turn CONSULT "ON" and touch "A/T".
3. Touch "SELF-DIAG RESULTS".
4. Touch "ERASE". (The DTC in the A/T control unit will be erased.) Then touch "BACK" twice.
5. Touch "ENGINE".
6. Touch "SELF-DIAG RESULTS".
7. Touch "ERASE". (The DTC in the ECM will be erased.)

- If DTCs are displayed for both ECM and A/T control unit, they need to be erased individually from the ECM and A/T control unit.

Emission-related Diagnostic Information (Cont'd)

How to erase DTC (With CONSULT)

1. If the ignition switch stays "ON" after repair work, be sure to turn ignition switch "OFF" once. Wait at least 7 seconds and then turn it "ON" (engine stopped) again.

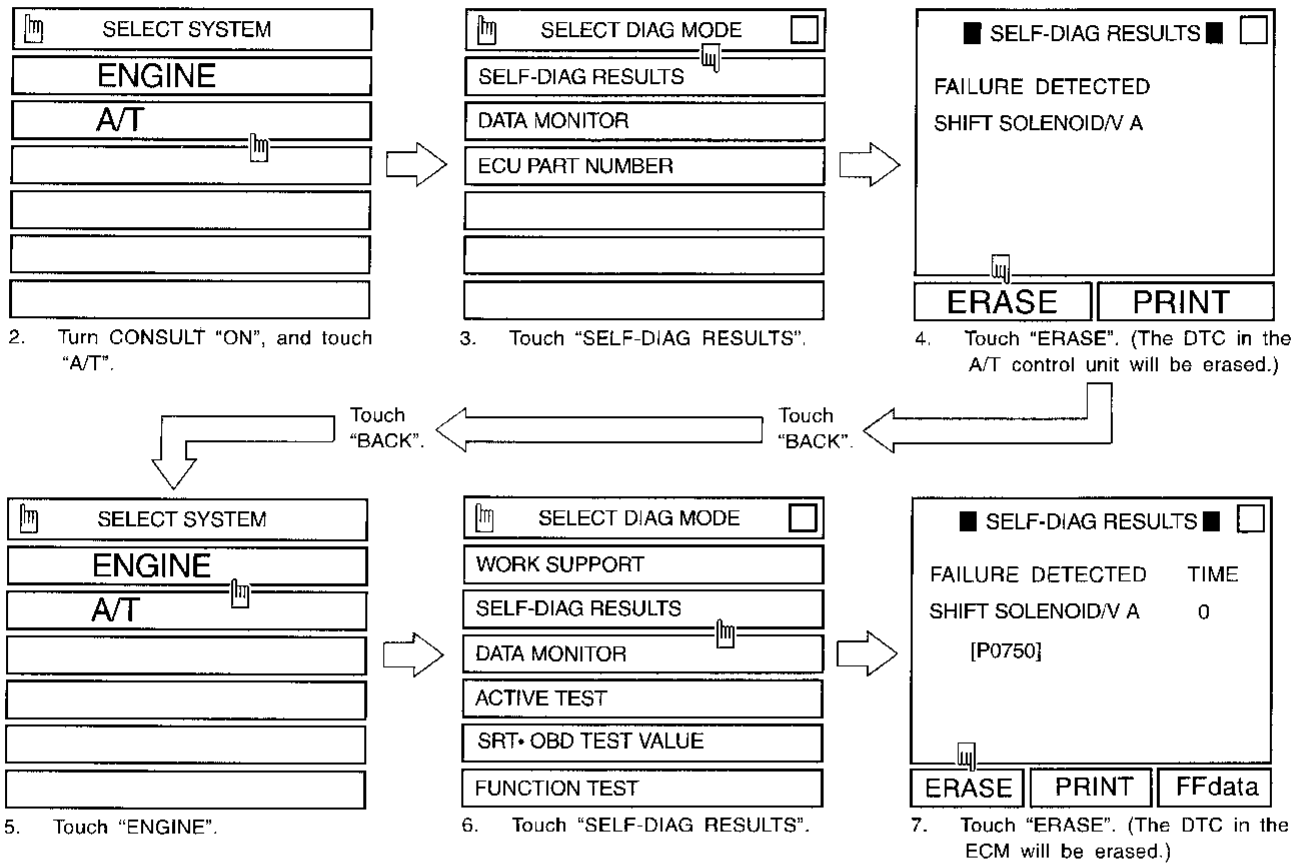

2. Turn CONSULT "ON", and touch "A/T".
3. Touch "SELF-DIAG RESULTS".
4. Touch "ERASE". (The DTC in the A/T control unit will be erased.)
5. Touch "ENGINE".
6. Touch "SELF-DIAG RESULTS".
7. Touch "ERASE". (The DTC in the ECM will be erased.)

How to erase DTC (With GST)

Note: If the diagnostic trouble code is not for A/T related items (see EC-2), skip step 2.

1. If the ignition switch stays "ON" after repair work, be sure to turn ignition switch "OFF" once. Wait at least 7 seconds and then turn it "ON" (engine stopped) again.
2. Perform "SELF-DIAGNOSTIC PROCEDURE (Without CONSULT)" in AT section titled "TROUBLE DIAGNOSIS", "Self-diagnosis". (The engine warm-up step can be skipped when performing the diagnosis only to erase the DTC.)
3. Select Mode 4 with GST (Generic Scan Tool).

How to erase DTC (No Tools)

Note: If the diagnostic trouble code is not for A/T related items (see EC-2), skip step 2.

1. If the ignition switch stays "ON" after repair work, be sure to turn ignition switch "OFF" once. Wait at least 7 seconds and then turn it "ON" again.
2. Perform "SELF-DIAGNOSTIC PROCEDURE (Without CONSULT)" in AT section titled "TROUBLE DIAGNOSIS", "Self-diagnosis". (The engine warm-up step can be skipped when performing the diagnosis only to erase the DTC.)
3. Change the diagnostic test mode from Mode II to Mode I by turning the mode selector on the ECM. (See EC-46.)

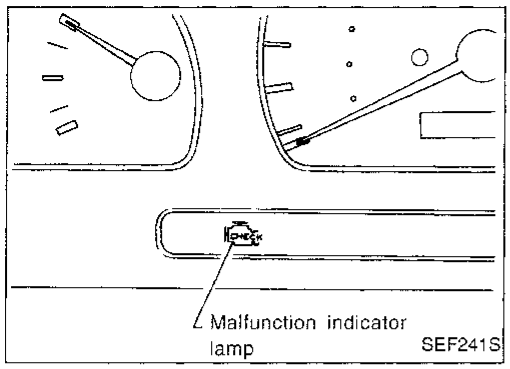

Malfunction Indicator Lamp (MIL)

1. The malfunction indicator lamp will light up when the ignition switch is turned ON without the engine running. This is a bulb check.
   - If the malfunction indicator lamp does not light up, refer to EL section ("WARNING LAMPS") or see EC-321.
2. When the engine is started, the malfunction indicator lamp should go off.
   If the lamp remains on, the on board diagnostic system has detected an engine system malfunction.

ON BOARD DIAGNOSTIC SYSTEM FUNCTION

The on board diagnostic system has the following four functions.

Diagnostic Test Mode I

1. BULB CHECK : This function checks the MIL bulb for damage (blown, open circuit, etc.).
   If the MIL does not come on, check MIL circuit and ECM test mode selector. (See next page.)
2. MALFUNCTION WARNING : This is a usual driving condition. When a malfunction is detected twice in two consecutive driving cycles (two trip detection logic), the MIL will light up to inform the driver that a malfunction has been detected.
   The following malfunctions will light up or blink the MIL in the 1st trip.
   - "Misfire (Possible three way catalyst damage)"
   - "Closed loop control"
   - Fail-safe mode

Diagnostic Test Mode II

3. SELF-DIAGNOSTIC RESULTS : This function allows DTCs and 1st trip DTCs to be read.
4. FRONT HEATED OXYGEN SENSOR MONITOR : This function allows the fuel mixture condition (lean or rich), monitored by front heated oxygen sensor, to be read.

MIL flashing without DTC

If the ECM is in Diagnostic Test Mode II, MIL may flash when engine is running. In this case, check ECM test mode selector following "HOW TO SWITCH DIAGNOSTIC TEST MODES" on next page.
Refer to "HOW TO SWITCH DIAGNOSTIC TEST MODES" on next page.

Condition		Diagnostic Test Mode I	Diagnostic Test Mode II
Ignition switch in "ON" position	Engine stopped	BULB CHECK	SELF-DIAGNOSTIC RESULTS
	Engine running	MALFUNCTION WARNING	FRONT HEATED OXYGEN SENSOR MONITOR

HOW TO SWITCH DIAGNOSTIC TEST MODES

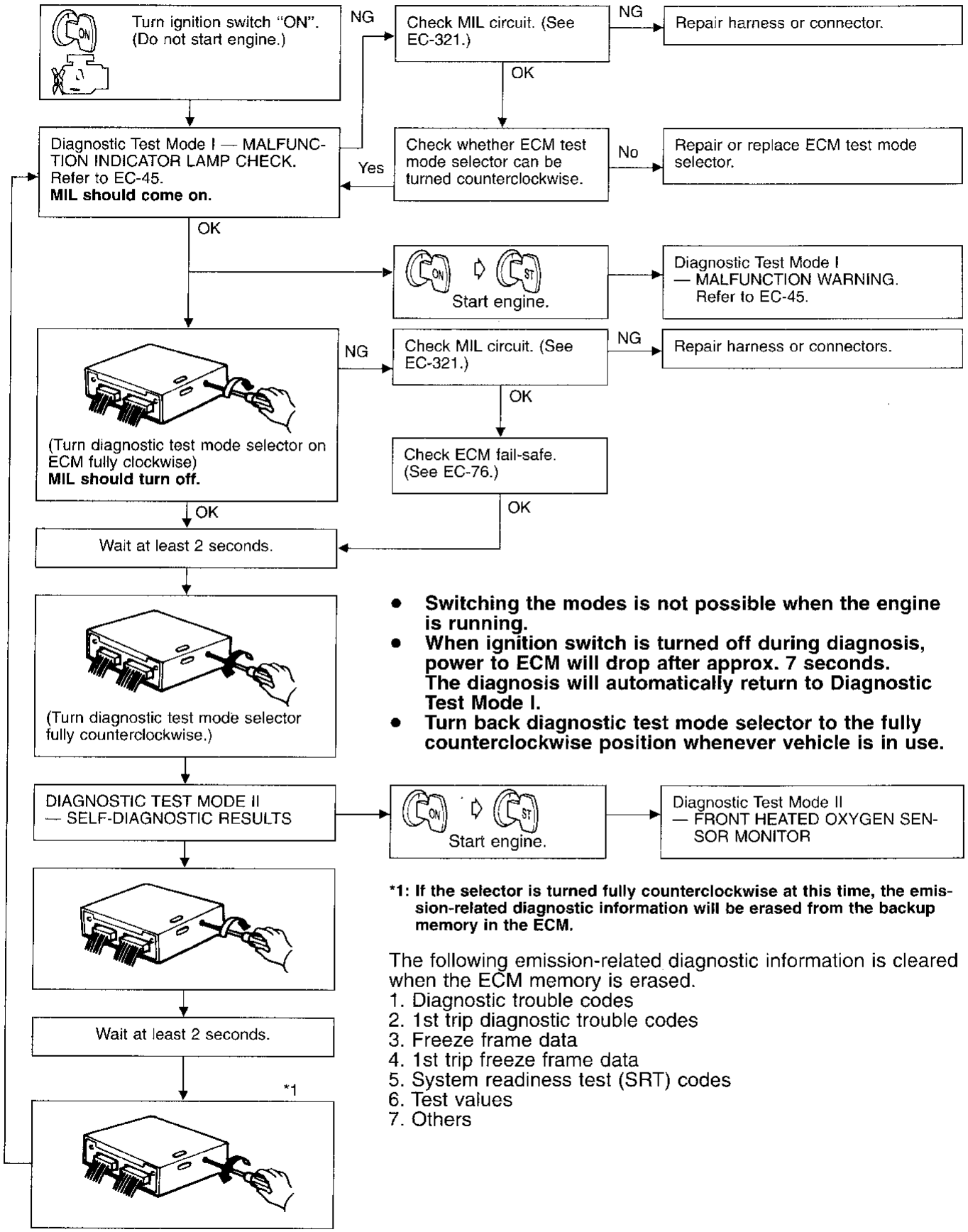

- **Switching the modes is not possible when the engine is running.**
- **When ignition switch is turned off during diagnosis, power to ECM will drop after approx. 7 seconds. The diagnosis will automatically return to Diagnostic Test Mode I.**
- **Turn back diagnostic test mode selector to the fully counterclockwise position whenever vehicle is in use.**

***1: If the selector is turned fully counterclockwise at this time, the emission-related diagnostic information will be erased from the backup memory in the ECM.**

The following emission-related diagnostic information is cleared when the ECM memory is erased.

1. Diagnostic trouble codes
2. 1st trip diagnostic trouble codes
3. Freeze frame data
4. 1st trip freeze frame data
5. System readiness test (SRT) codes
6. Test values
7. Others

DIAGNOSTIC TEST MODE I—BULB CHECK

In this mode, the MALFUNCTION INDICATOR LAMP on the instrument panel should stay ON. If it remains OFF, check the bulb. Refer to EL section ("WARNING LAMPS") or see EC-321.

DIAGNOSTIC TEST MODE I—MALFUNCTION WARNING

MALFUNCTION INDICATOR LAMP	Condition
ON	When the malfunction is detected or the ECM's CPU is malfunctioning.
OFF	No malfunction.

- These Diagnostic Trouble Code Numbers are clarified in Diagnostic Test Mode II (SELF-DIAGNOSTIC RESULTS).

DIAGNOSTIC TEST MODE II—SELF-DIAGNOSTIC RESULTS

In this mode, the DTC and 1st trip DTC are indicated by the number of blinks of the MALFUNCTION INDICATOR LAMP.
The DTC and 1st trip DTC are displayed at the same time. If the MIL does not illuminate in diagnostic test mode 1 (Malfunction warning), all displayed items are 1st trip DTCs. If only one code is displayed when the MIL illuminates in diagnostic test mode II (SELF-DIAGNOSTIC RESULTS), it is a DTC; if two or more codes are displayed, they may be either DTCs or 1st trip DTCs. DTC No. is same as that of 1st trip DTC. These unidentified codes can be identified by using the CONSULT or GST. A DTC will be used as an example for how to read a code.

Example: Diagnostic trouble code No. 0102 and No. 0403

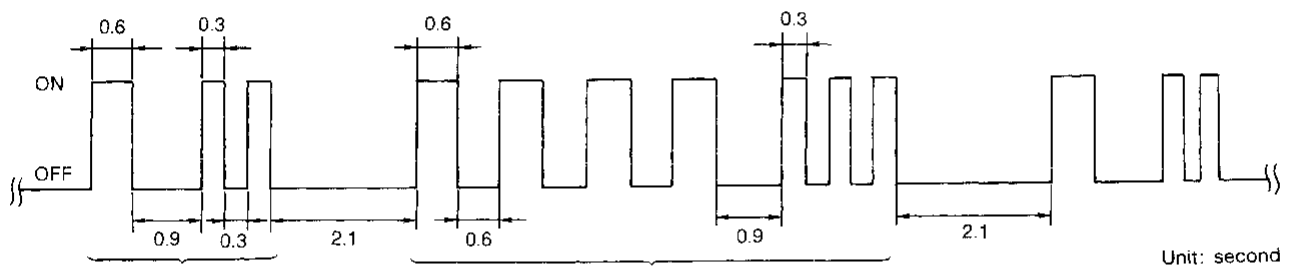

SEF298Q

Example: Diagnostic trouble code No. 1003

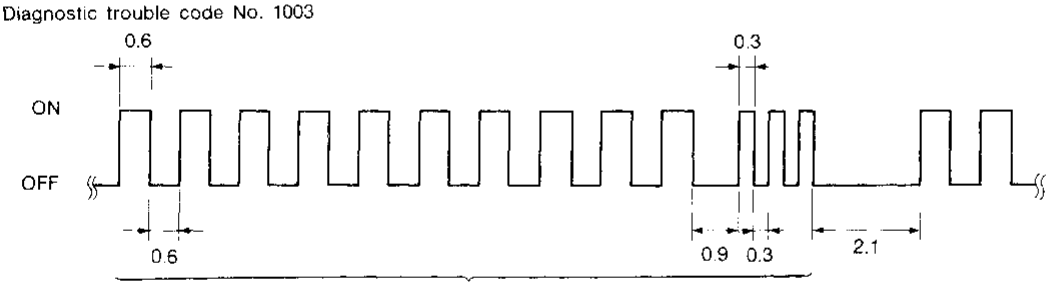

SEF162PA

Long (0.6 second) blinking indicates the number of ten digits, and short (0.3 second) blinking indicates the number of single digits. For example, the malfunction indicator lamp blinks 10 times for 6 seconds (0.6 sec x 10 times) and then it blinks three times for about 1 second (0.3 sec x 3 times). This indicates the DTC "1003" and refers to the malfunction of the park/neutral position switch.
In this way, all the detected malfunctions are classified by their diagnostic trouble code numbers. The DTC "0505" refers to no malfunction. (See DIAGNOSTIC TROUBLE CODE INDEX, EC-2.)

HOW TO ERASE DIAGNOSTIC TEST MODE II (Self-diagnostic results)

The diagnostic trouble code can be erased from the backup memory in the ECM when the diagnostic test mode is changed from Diagnostic Test Mode II to Diagnostic Test Mode I. (Refer to "HOW TO SWITCH DIAGNOSTIC TEST MODES" on previous page.)

- **If the battery is disconnected, the diagnostic trouble code will be lost from the backup memory after approx. 24 hours.**
- **Be careful not to erase the stored memory before starting trouble diagnoses.**

Malfunction Indicator Lamp (MIL) (Cont'd)

DIAGNOSTIC TEST MODE II—FRONT HEATED OXYGEN SENSOR MONITOR

In this mode, the MALFUNCTION INDICATOR LAMP displays the condition of the fuel mixture (lean or rich) which is monitored by the front heated oxygen sensor.

MALFUNCTION INDICATOR LAMP	Fuel mixture condition in the exhaust gas	Air fuel ratio feedback control condition
ON	Lean	Closed loop system
OFF	Rich	
*Remains ON or OFF	Any condition	Open loop system

*: Maintains conditions just before switching to open loop.

To check the front heated oxygen sensor function, start engine in Diagnostic Test Mode II. Then warm it up until engine coolant temperature indicator points to middle of gauge.
Next run engine at about 2,000 rpm for about 2 minutes under no-load conditions. Make sure that the MALFUNCTION INDICATOR LAMP comes ON more than 5 times within 10 seconds with engine running at 2,000 rpm under no-load.

OBD System Operation Chart

RELATIONSHIP BETWEEN MIL, 1ST TRIP DTC, DTC, AND DETECTABLE ITEMS

- When a malfunction is detected for the first time, the 1st trip DTC and the 1st trip freeze frame data are stored in the ECM memory.
- When the same malfunction is detected in two consecutive trips, the DTC and the freeze frame data are stored in the ECM memory, and the MIL will come on. For details, refer to "Two Trip Detection Logic" on EC-34.
- The MIL will go off after the vehicle is driven 3 times with no malfunction. The drive is counted only when the recorded driving pattern is met (as stored in the ECM). If another malfunction occurs while counting, the counter will reset.
- The DTC and the freeze frame data will be stored until the vehicle is driven 40 times (driving pattern A) without the same malfunction recurring (except for Misfire and Fuel Injection System). For Misfire and Fuel Injection System, the DTC and freeze frame data will be stored until the vehicle is driven 80 times (driving pattern C) without the same malfunction recurring. The "TIME" in "SELF-DIAGNOSTIC RESULTS" mode of CONSULT will count the number of times the vehicle is driven.
- The 1st trip DTC is not displayed when the self-diagnosis results in "OK" for the 2nd trip.

SUMMARY CHART

Items	Fuel Injection System	Misfire	Except the lefts
MIL (goes off)	3 (pattern B)	3 (pattern B)	3 (pattern B)
DTC, Freeze Frame Data (no display)	80 (pattern C)	80 (pattern C)	40 (pattern A)
1st Trip DTC (clear)	1 (pattern C), *1	1 (pattern C), *1	1 (pattern B)
1st Trip Freeze Frame Data (clear)	*1, *2	*1, *2	1 (pattern B)

Details about patterns "A", "B", and "C" are on EC-50, 52.
*1: Clear timing is at the moment OK is detected.
*2: Clear timing is when the same malfunction is detected in the 2nd trip.

OBD System Operation Chart (Cont'd)

RELATIONSHIP BETWEEN MIL, DTC, 1ST TRIP DTC AND DRIVING PATTERNS FOR "MISFIRE" <EXHAUST QUALITY DETERIORATION>, "FUEL INJECTION SYSTEM"

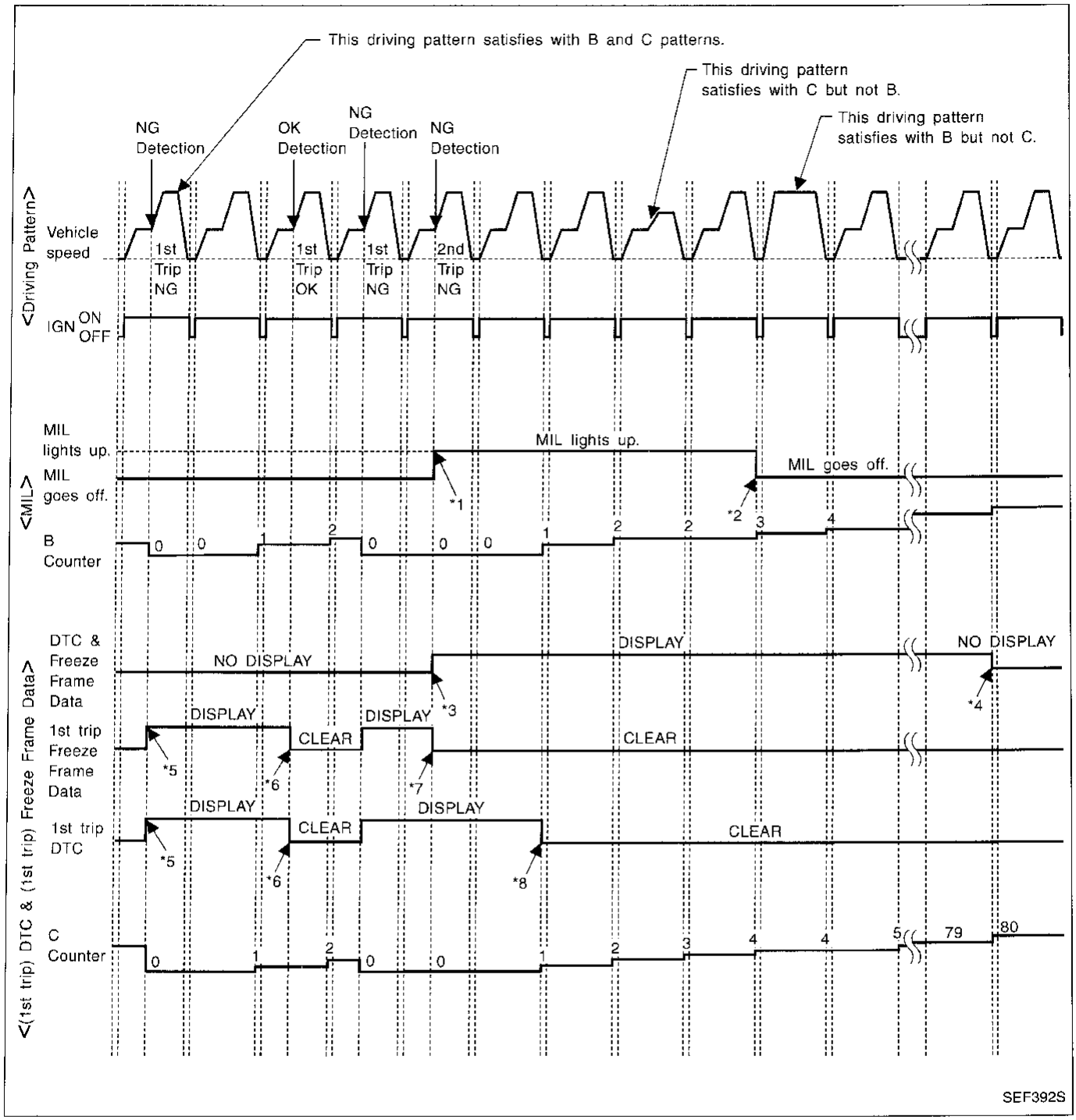

*1: When the same malfunction is detected in two consecutive trips, MIL will light up.

*2: MIL will go off after vehicle is driven three times (pattern B) without any malfunctions.

*3: When the same malfunction is detected in two consecutive trips, the DTC and the freeze frame data will be stored in ECM.

*4: The DTC and the freeze frame data will not be displayed any longer after vehicle is driven 80 times (pattern C) without the same malfunction.
(The DTC and the freeze frame data still remain in ECM.)

*5: When a malfunction is detected for the first time, the 1st trip DTC and the 1st trip freeze frame data will be stored in ECM.

*6: The 1st trip DTC and the 1st trip freeze frame data will be cleared at the moment OK is detected.

*7: When the same malfunction is detected in the 2nd trip, the 1st trip freeze frame data will be cleared.

*8: 1st trip DTC will be cleared when vehicle is driven once (pattern C) without the same malfunction after DTC is stored in ECM.

EXPLANATION FOR DRIVING PATTERNS FOR "MISFIRE <EXHAUST QUALITY DETERIORATION>", "FUEL INJECTION SYSTEM"

〈Driving pattern B〉

Driving pattern B means the vehicle operation as follows:
All components and systems should be monitored at least once by the OBD system.

- The B counter will reset when the malfunction is detected once regardless of the driving pattern.
- The B counter will be counted up when driving pattern B is satisfied without the malfunction.
- The MIL will go off when the B counter reaches 3. (*2 in "OBD SYSTEM OPERATION CHART")

〈Driving pattern C〉

Driving pattern C means the vehicle operation as follows:

(1) The following conditions should be satisfied at the same time:
Engine speed: (Engine speed in the freeze frame data) ±375 rpm
Calculated load value: (Calculated load value in the freeze frame data) x (1±0.1) [%]
Engine coolant temperature (T) condition:

- When the freeze frame data shows lower than 70°C (158°F), "T" should be lower than 70°C (158°F).
- When the freeze frame data shows higher than or equal to 70°C (158°F), "T" should be higher than or equal to 70°C (158°F).

Example:
If the stored freeze frame data is as follows:
Engine speed: 850 rpm, Calculated load value: 30%, Engine coolant temperature: 80°C (176°F)
To be satisfied with driving pattern C, the vehicle should run under the following conditions:
Engine speed: 475 - 1,225 rpm, Calculated load value: 27 - 33%, Engine coolant temperature: more than ≧ 70°C (158°F)

- The C counter will be cleared when the malfunction is detected regardless of (1).
- The C counter will be counted up when (1) is satisfied without the same malfunction.
- The DTC will not be displayed after C counter reaches 80.
- The 1st trip DTC will be cleared when C counter is counted once without the same malfunction after DTC is stored in ECM.

OBD System Operation Chart (Cont'd)

RELATIONSHIP BETWEEN MIL, DTC, 1ST TRIP DTC AND DRIVING PATTERNS EXCEPT FOR "MISFIRE <EXHAUST QUALITY DETERIORATION>", "FUEL INJECTION SYSTEM"

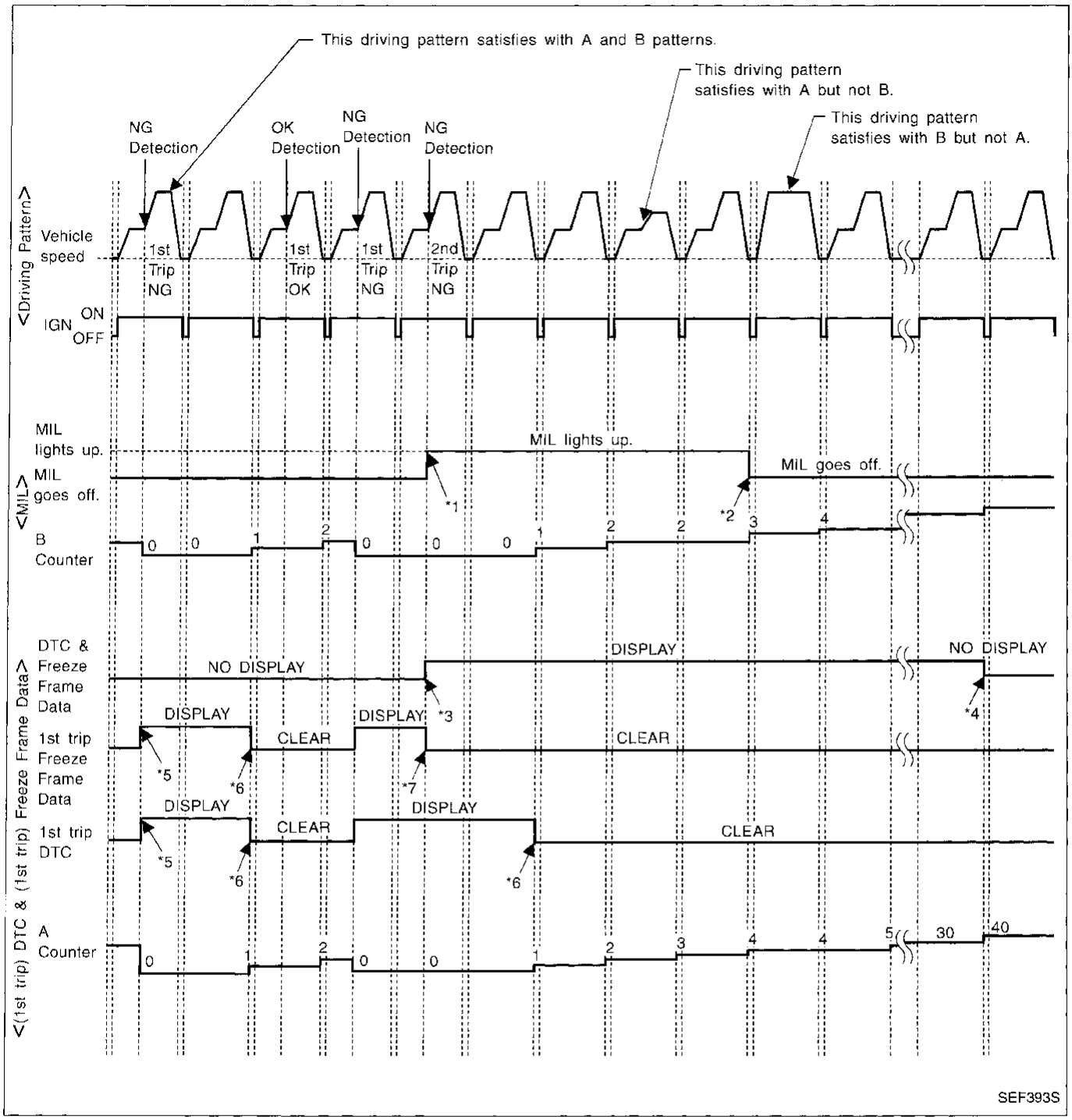

*1: When the same malfunction is detected in two consecutive trips, MIL will light up.

*2: MIL will go off after vehicle is driven three times (pattern B) without any malfunctions.

*3: When the same malfunction is detected in two consecutive trips, the DTC and the freeze frame data will be stored in ECM.

*4: The DTC and the freeze frame data will not be displayed any longer after vehicle is driven 40 times (pattern A) without the same malfunction.
(The DTC and the freeze frame data still remain in ECM.)

*5: When a malfunction is detected for the first time, the 1st trip DTC and the 1st trip freeze frame data will be stored in ECM.

*6: 1st trip DTC will be cleared after vehicle is driven once (pattern B) without the same malfunction.

*7: When the same malfunction is detected in the 2nd trip, the 1st trip freeze frame data will be cleared.

OBD System Operation Chart (Cont'd)

EXPLANATION FOR DRIVING PATTERNS EXCEPT FOR "MISFIRE <EXHAUST QUALITY DETERIORATION>", "FUEL INJECTION SYSTEM"

〈Driving pattern A〉

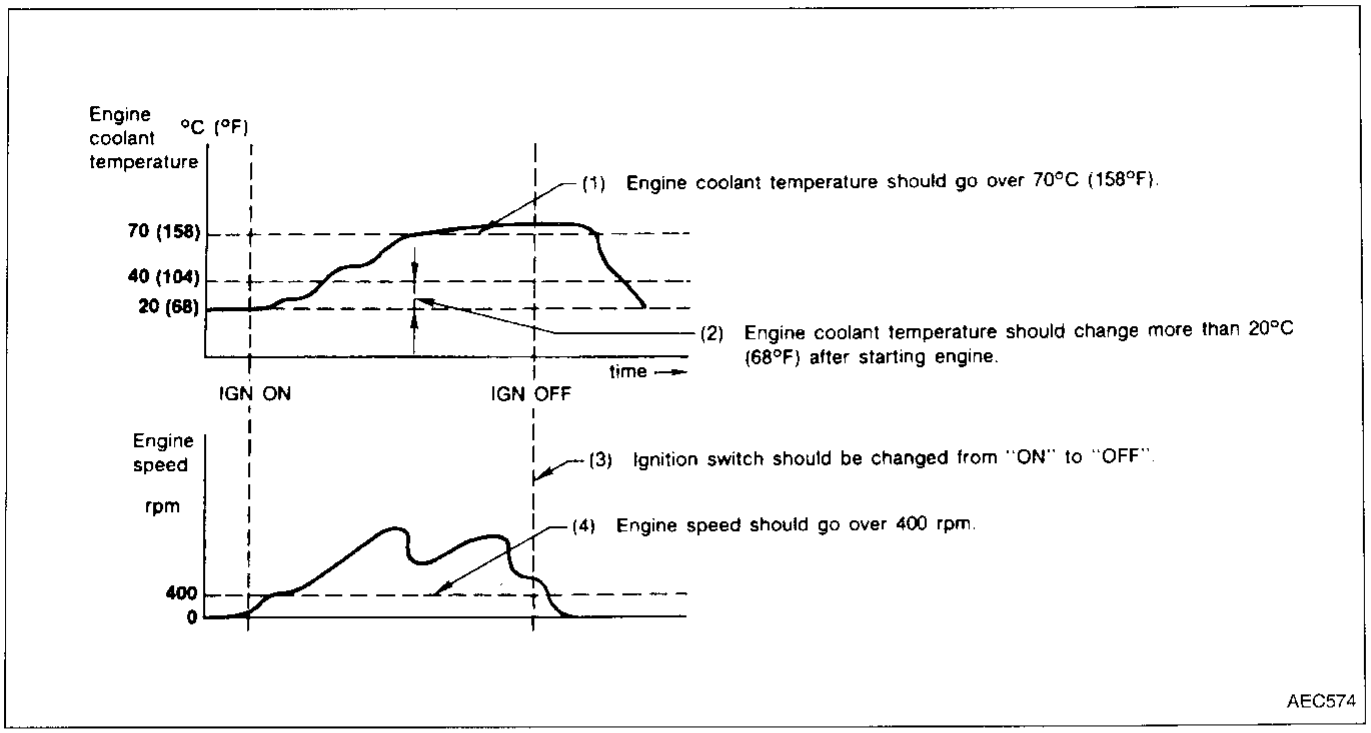

- The A counter will be cleared when the malfunction is detected regardless of (1) - (4).
- The A counter will be counted up when (1) - (4) are satisfied without the same malfunction.
- The DTC will not be displayed after the A counter reaches 40.

〈Driving pattern B〉

Driving pattern B means the vehicle operation as follows:
All components and systems should be monitored at least once by the OBD system.

- The B counter will be cleared when the malfunction is detected once regardless of the driving pattern.
- The B counter will be counted up when driving pattern B is satisfied without any malfunctions.
- The MIL will go off when the B counter reaches 3 (*2 in "OBD SYSTEM OPERATION CHART").

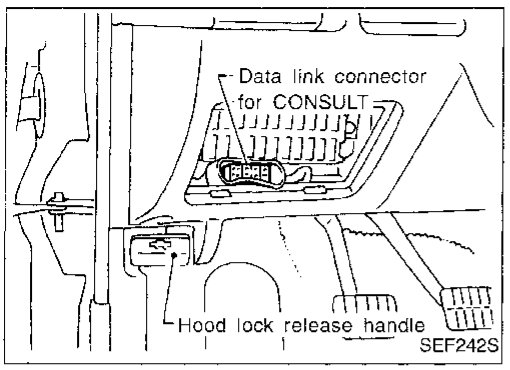

CONSULT

CONSULT INSPECTION PROCEDURE

1. Turn ignition switch OFF.
2. Connect "CONSULT" to data link connector for CONSULT. (Data link connector for CONSULT is located behind the fuse box cover.)

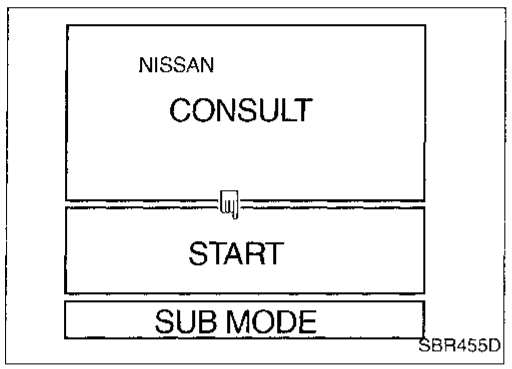

3. Turn ignition switch ON.
4. Touch "START".

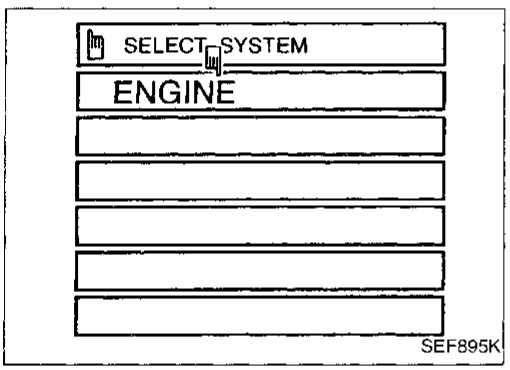

5. Touch "ENGINE".

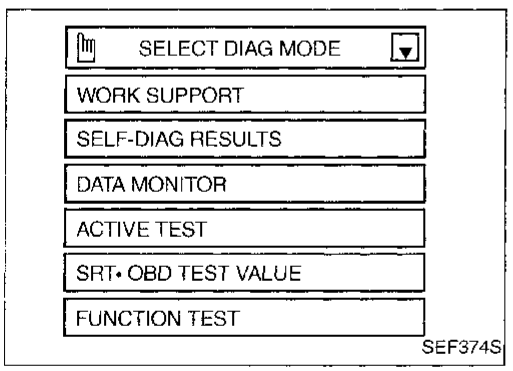

6. Perform each diagnostic test mode according to each service procedure.

For further information, see the CONSULT Operation Manual.

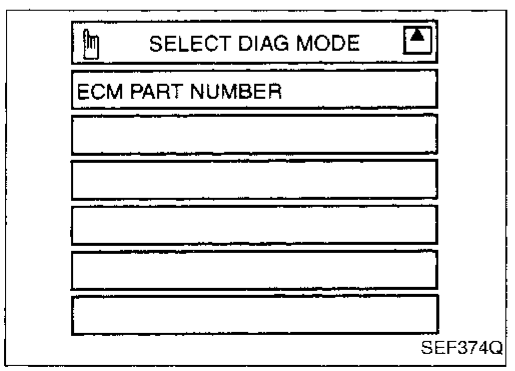

CONSULT (Cont'd)

ECCS COMPONENT PARTS/CONTROL SYSTEMS APPLICATION

Item			DIAGNOSTIC TEST MODE						
			WORK SUP-PORT	SELF-DIAGNOSTIC RESULTS*1	FREEZE FRAME DATA*2	DATA MONITOR	ACTIVE TEST	FUNC-TION TEST	SRT·OBD TEST VALUE
ECCS COMPONENT PARTS	INPUT	Camshaft position sensor		X	X	X			
		Mass air flow sensor		X		X			
		Engine coolant temperature sensor		X	X	X	X		
		Front heated oxygen sensor		X		X		X	X
		Rear heated oxygen sensor		X		X			X
		Vehicle speed sensor		X	X	X		X	
		Throttle position sensor	X	X		X		X	
		Tank fuel temperature sensor		X		X			
		EVAP control system pressure sensor		X		X			
		Absolute pressure sensor		X		X			
		EGR temperature sensor		X		X			
		Intake air temperature sensor		X		X			
		Crankshaft position sensor (OBD)		X					
		Ignition switch (start signal)				X		X	
		Closed throttle position switch		X					
		Closed throttle position switch (throttle position sensor signal)				X		X	
		Air conditioner switch				X			
		Park/Neutral position switch		X		X		X	
		Power steering oil pressure switch				X		X	
		Swirl control valve control vacuum check switch		X		X			
		Battery voltage				X			
	OUTPUT	Injectors				X	X	X	
		Power transistor (Ignition timing)	X	X (Ignition signal)		X	X	X	
		IACV-AAC valve	X	X		X	X	X	
		EVAP canister purge volume control valve		X		X	X		
		Air conditioner relay				X			
		Fuel pump relay	X			X	X	X	
		EGRC-solenoid valve		X		X	X	X	
		Swirl control valve control solenoid valve		X		X	X	X	
		Front heated oxygen sensor heater		X		X			X
		Rear heated oxygen sensor heater		X		X			X
		Torque converter clutch solenoid valve		X		X			
		EVAP canister purge control solenoid valve		X		X	X		
		EVAP canister vent control valve		X		X			
		Vacuum cut valve bypass valve		X		X			
		MAP/BARO switch solenoid valve		X		X	X		
		Calculated load value			X	X			

X: Applicable
*1: This item includes 1st trip DTCs.
*2: This mode includes 1st trip freeze frame data or freeze frame data. The items appear on CONSULT screen in freeze frame data mode only if a 1st trip DTC or DTC is detected. For details, refer to EC-36.

FUNCTION

Diagnostic test mode	Function
Work support	This mode enables a technician to adjust some devices faster and more accurately by following the indications on the CONSULT unit.
Self-diagnostic results	Self-diagnostic results such as 1st trip DTC, DTCs and 1st trip freeze frame data or freeze frame data can be read and erased quickly.*1
Data monitor	Input/Output data in the ECM can be read.
Active test	Diagnostic Test Mode in which CONSULT drives some actuators apart from the ECMs and also shifts some parameters in a specified range.
SRT-OBD test value	The status of system monitoring tests and the test values/test limits can be read.
Function test	Conducted by CONSULT instead of a technician to determine whether each system is "OK" or "NG".
ECM part numbers	ECM part numbers can be read.

*1: The following emission-related diagnostic information is cleared when the ECM memory is erased.
1. Diagnostic trouble codes
2. 1st trip diagnostic trouble codes
3. Freeze frame data
4. 1st trip freeze frame data
5. System readiness test (SRT) codes
6. Test values
7. Others

WORK SUPPORT MODE

WORK ITEM	CONDITION	USAGE
THRTL POS SEN ADJ	CHECK THE THROTTLE POSITION SENSOR SIGNAL. ADJUST IT TO THE SPECIFIED VALUE BY ROTATING THE SENSOR BODY UNDER THE FOLLOWING CONDITIONS. ● IGN SW "ON" ● ENG NOT RUNNING ● ACC PEDAL NOT PRESSED	When adjusting throttle position sensor initial position
IGNITION TIMING ADJ	● IGNITION TIMING FEEDBACK CONTROL WILL BE HELD BY TOUCHING "START". AFTER DOING SO, ADJUST IGNITION TIMING WITH A TIMING LIGHT BY TURNING THE CRANKSHAFT POSITION SENSOR.	When adjusting initial ignition timing
IACV-AAC VALVE ADJ	SET ENGINE SPEED AT THE SPECIFIED VALUE UNDER THE FOLLOWING CONDITIONS. ● ENGINE WARMED UP ● NO-LOAD	
FUEL PRESSURE RELEASE	● FUEL PUMP WILL STOP BY TOUCHING "START" DURING IDLING. CRANK A FEW TIMES AFTER ENGINE STALLS.	When releasing fuel pressure from fuel line

SELF-DIAGNOSTIC MODE

DTC and 1st trip DTC

Regarding items of "DTC and 1st trip DTC", refer to "EMISSION-RELATED DIAGNOSTIC INFORMATION ITEMS" (See EC-41.)

Freeze frame data and 1st trip freeze frame data

Freeze frame data item*	Description
DIAG TROUBLE CODE [PXXXX]	• ECCS component part/control system has a trouble code, it is displayed as "PXXXX". [Refer to "Alphabetical & P No. Index for DTC (EC-2).]
FUEL SYS DATA	• "Fuel injection system status" at the moment a malfunction is detected is displayed. • One mode in the following is displayed. "MODE 2": Open loop due to detected system malfunction "MODE 3": Open loop due to driving conditions (power enrichment, deceleration enrichment) "MODE 4": Closed loop - using oxygen sensor(s) as feedback for fuel control "MODE 5": Open loop - has not yet satisfied condition to go to closed loop
CAL/LD VALUE [%]	• The calculated load value at the moment a malfunction is detected is displayed.
COOLANT TEMP [°C] or [°F]	• The engine coolant temperature at the moment a malfunction is detected is displayed.
S-FUEL TRIM [%]	• "Short-term fuel trim" at the moment a malfunction is detected is displayed. • The short-term fuel trim indicates dynamic or instantaneous feedback compensation to the base fuel schedule.
L-FUEL TRIM [%]	• "Long-term fuel trim" at the moment a malfunction is detected is displayed. • The long-term fuel trim indicates much more gradual feedback compensation to the base fuel schedule than short-term fuel trim.
ENGINE SPEED [rpm]	• The engine speed at the moment a malfunction is detected is displayed.
VHCL SPEED [km/h] or [mph]	• The vehicle speed at the moment a malfunction is detected is displayed.
ABSOL PRES [kPa] or [kg/cm^2] or [psi]	• The intake manifold absolute pressure at the moment a malfunction is detected is displayed.

*: The items are same as those of 1st trip freeze frame data.

CONSULT (Cont'd)

DATA MONITOR MODE

Monitored item [Unit]	ECM input signals	Main signals	Description	Remarks
CMPS·RPM (POS) [rpm]	○	○	• Indicates the engine speed computed from the POS signal (1° signal) of the camshaft position sensor.	
CMPS·RPM (REF) [rpm]	○		• Indicates the engine speed computed from the REF signal (180° signal) of the camshaft position sensor.	• The accuracy of detection becomes poor if engine speed drops below the idle rpm. • If the signal is interrupted while the engine is running, an abnormal value may be indicated.
MAS AIR/FL SE [V]	○	○	• The signal voltage of the mass air flow sensor is displayed.	• When the engine is stopped, a certain value is indicated.
COOLAN TEMP/S [°C] or [°F]	○	○	• The engine coolant temperature (determined by the signal voltage of the engine coolant temperature sensor) is displayed.	• When the engine coolant temperature sensor is open or short-circuited, ECM enters fail-safe mode. The engine coolant temperature determined by the ECM is displayed.
FR O2 SENSOR [V]	○	○	• The signal voltage of the front heated oxygen sensor is displayed.	
RR O2 SENSOR [V]	○	○	• The signal voltage of the rear heated oxygen sensor is displayed.	
FR O2 MNTR [RICH/LEAN]	○	○	• Display of front oxygen sensor signal during air-fuel ratio feedback control: RICH ... means the mixture became "rich", and control is being affected toward a leaner mixture. LEAN ... means the mixture became "lean", and control is being affected toward a rich mixture.	• After turning ON the ignition switch, "RICH" is displayed until air-fuel mixture ratio feedback control begins. • When the air-fuel ratio feedback is clamped, the value just before the clamping is displayed continuously.
RR O2 MNTR [RICH/LEAN]	○		• Display of rear heated oxygen sensor signal: RICH ... means the amount of oxygen downstream three way catalyst is relatively small. LEAN ... means the amount of oxygen downstream three way catalyst is relatively large.	• When the engine is stopped, a certain value is indicated.
VHCL SPEED SE [km/h] or [mph]	○	○	• The vehicle speed computed from the vehicle speed sensor signal is displayed.	

NOTE:
Any monitored item that does not match the vehicle being diagnosed is deleted from the display automatically.

CONSULT (Cont'd)

Monitored item [Unit]	ECM input signals	Main signals	Description	Remarks
BATTERY VOLT [V]	○	○	● The power supply voltage of ECM is displayed.	
THRTL POS SEN [V]	○	○	● The throttle position sensor signal voltage is displayed.	
TANK F/TMP SE [°C] or [°F]	○		● The fuel temperature judged from the tank fuel temperature sensor signal voltage is displayed.	
EGR TEMP SEN [V]	○		● The signal voltage of the EGR temperature sensor is displayed.	
INT/A TEMP SE [°C] or [°F]	○		● The intake air temperature determined by the signal voltage of the intake air temperature sensor is indicated.	
START SIGNAL [ON/OFF]	○	○	● Indicates [ON/OFF] condition from the starter signal.	● After starting the engine, [OFF] is displayed regardless of the starter signal.
CLSD THL/P SW [ON/OFF]	○	○	● Indicates [ON/OFF] condition from the closed throttle position switch signal.	
AIR COND SIG [ON/OFF]	○	○	● Indicates [ON/OFF] condition of the air conditioner switch as determined by the air conditioner signal.	
P/N POSI SW [ON/OFF]	○	○	● Indicates [ON/OFF] condition from the park/neutral position switch signal.	
PW/ST SIGNAL [ON/OFF]	○	○	● [ON/OFF] condition of the power steering oil pressure switch determined by the power steering oil pressure signal is indicated.	
IGNITION SW [ON/OFF]	○		● Indicates [ON/OFF] condition from ignition switch.	
SWL CON VC SW [ON/OFF]	○		● Indicates [ON/OFF] condition of swirl control valve control vacuum check switch determined by ECM according to the input signal. ON ... Atmospheric pressure OFF ... Vacuum pressure	
INJ PULSE [msec]		○	● Indicates the actual fuel injection pulse width compensated by ECM according to the input signals.	● When the engine is stopped, a certain computed value is indicated.
B/FUEL SCHDL [msec]		○	● "Base fuel schedule" indicates the fuel injection pulse width programmed into ECM, prior to any learned on-board correction.	
IGN TIMING [BTDC]		○	● Indicates the ignition timing computed by ECM according to the input signals.	

CONSULT (Cont'd)

Monitored item [Unit]	ECM input signals	Main signals	Description	Remarks
IACV-AAC/V [%]		○	• Indicates the idle air control valve (AAC valve) control value computed by ECM according to the input signals.	
PURG VOL C/V [step]			• Indicates the EVAP canister purge volume control valve computed by the engine control module according to the input signals. • The opening becomes larger as the value increases.	
A/F ALPHA [%]			• The mean value of the air-fuel ratio feedback correction factor per cycle is indicated.	• When the engine is stopped, a certain value is indicated. • This data also includes the data for the air-fuel ratio learning control.
EVAP SYS PRES [V]		○	• The signal voltage of EVAP control system pressure sensor is displayed.	
AIR COND RLY [ON/OFF]			• The air conditioner relay control condition (determined by ECM according to the input signal) is indicated.	
FUEL PUMP RLY [ON/OFF]			• Indicates the fuel pump relay control condition determined by ECM according to the input signals.	
SWRL CONT S/V			• The control condition of the swirl control valve control solenoid valve (computed by the ECM according to the input signal) is indicated. ON ... Swirl control valve is closed OFF ... Swirl control valve is open	
EGRC SOL/V [ON/OFF]			• The control condition of the EGRC-solenoid valve (determined by ECM according to the input signal) is indicated. ON ... EGR operation is cut-off OFF ... EGR is operational	
TCC SOL/V			• The control condition of the torque converter clutch solenoid valve (determined by ECM according to the input signal) is indicated. ON ... Lock-up is cancelled OFF ... Lock-up is operational	
VENT CONT/V [ON/OFF]			• The control condition of the EVAP canister vent control valve (determined by ECM according to the input signal) is indicated. ON ... Closed OFF ... Open	
FR O2 HEATER			• Indicates [ON/OFF] condition of front heated oxygen sensor heater determined by ECM according to the input signals.	
VC/V BYPASS/V [ON/OFF]			• The control condition of the vacuum cut valve bypass valve (determined by ECM according to the input signal) is indicated. ON ... Open OFF ... Closed	

Monitored item [Unit]	ECM input signals	Main signals	Description	Remarks
PURG CONT S/V [ON/OFF]			● The control condition of the EVAP canister purge control solenoid valve (computed by the engine control module according to the input signals) is indicated. ● ON ... Canister purge is operational OFF ... Canister purge operation is cut-off	
RR O2 HEATER			● Indicates [ON/OFF] condition of front heated oxygen sensor heater determined by ECM according to the input signals.	
CAL/LD VALUE [%]			● "Calculated load value" indicates the value of the current airflow divided by peak airflow.	
ABSOL TH·P/S [%]			● "Absolute throttle position sensor" indicates the throttle opening computed by ECM according to the signal voltage of the throttle position sensor.	
MASS AIRFLOW [g·m/s]			● Indicates the mass airflow computed by ECM according to the signal voltage of the mass airflow sensor.	
MAP/BARO SW/V [MAP/BARO]			● The control condition of the MAP/BARO switch solenoid valve (determined by ECM according to the input signal) is indicated. MAP ... Intake manifold absolute pressure BARO ... Barometric pressure	
ABSOL PRES/SE [V]			● The signal voltage of the absolute pressure sensor is displayed.	
VOLTAGE [V]			● Voltage measured by the voltage probe.	
PULSE [msec] or [Hz] or [%]			● Pulse width, frequency or duty cycle measured by the pulse probe.	● Only "#" is displayed if item is unable to be measured. ● Figures with "#"s are temporary ones. They are the same figures as an actual piece of data which was just previously measured.

ACTIVE TEST MODE

TEST ITEM	CONDITION	JUDGEMENT	CHECK ITEM (REMEDY)
FUEL INJECTION	● Engine: Return to the original trouble condition ● Change the amount of fuel injection using CONSULT.	If trouble symptom disappears, see CHECK ITEM.	● Harness and connector ● Fuel injectors ● Front heated oxygen sensor
IACV-AAC/V OPENING	● Engine: After warming up, idle the engine. ● Change the IACV-AAC valve opening percent using CONSULT.	Engine speed changes according to the opening percent.	● Harness and connector ● IACV-AAC valve
ENG COOLANT TEMP	● Engine: Return to the original trouble condition ● Change the engine coolant temperature using CONSULT.	If trouble symptom disappears, see CHECK ITEM.	● Harness and connector ● Engine coolant temperature sensor ● Fuel injectors
IGNITION TIMING	● Engine: Return to the original trouble condition ● Timing light: Set ● Retard the ignition timing using CONSULT.	If trouble symptom disappears, see CHECK ITEM.	● Adjust initial ignition timing
POWER BALANCE	● Engine: After warming up, idle the engine. ● Air conditioner switch "OFF" ● Shift lever "N" ● Cut off each injector signal one at a time using CONSULT.	Engine runs rough or dies.	● Harness and connector ● Compression ● Injectors ● Power transistor ● Spark plugs ● Ignition coils
FUEL PUMP RELAY	● Ignition switch: ON (Engine stopped) ● Turn the fuel pump relay "ON" and "OFF" using CONSULT and listen to operating sound.	Fuel pump relay makes the operating sound.	● Harness and connector ● Fuel pump relay
EGRC SOLENOID VALVE	● Ignition switch: ON ● Turn solenoid valve "ON" and "OFF" with CONSULT and listen to operating sound.	Solenoid valve makes an operating sound.	● Harness and connector ● Solenoid valve
SWIRL CONT SOL VALVE	● Ignition switch: ON (Engine stopped) ● Turn solenoid valve "ON" and "OFF" with CONSULT and listen to operating sound.	Solenoid valve makes an operating sound.	● Harness and connector ● Solenoid valve ● Swirl control valve ● Vacuum hose
SELF-LEARNING CONT	● In this test, the coefficient of self-learning control mixture ratio returns to the original coefficient by touching "CLEAR" on the screen.		
PURG VOL CONT/V	● Engine: After warming up, run engine at 1,500 rpm. ● Change the EVAP canister purge volume control valve opening step using CONSULT.	Engine speed changes according to the opening step.	● Harness and connector ● EVAP canister purge volume control valve
PURG CONT S/V	● Start engine. ● Turn the EVAP canister purge control solenoid valve "ON" and "OFF" using CONSULT and listen for operating sound.	EVAP canister purge control solenoid valve makes an operating sound. Check vacuum signal for EVAP canister purge control valve. VC ON ... Vacuum exists. VC OFF ... Vacuum does not exist.	● Harness and connector ● EVAP canister purge control solenoid valve ● Vacuum hose
MAP/BARO SW/V	● Ignition switch: ON (Engine stopped) ● Turn the MAP/BARO switch solenoid valve between "MAP" and "BARO" using CONSULT and listen for operating sound.	MAP/BARO switch solenoid valve makes an operating sound.	● Harness and connector ● MAP/BARO switch solenoid valve
TANK F/TEMP SEN	● Change the tank fuel temperature using CONSULT.		

FUNCTION TEST MODE

FUNCTION TEST ITEM	CONDITION	JUDGEMENT		CHECK ITEM (REMEDY)
SELF-DIAG RESULTS	• Ignition switch: ON (Engine stopped) • Displays the results of on board diagnostic system.	—		Objective system
CLOSED THROTTLE POSI (CLOSED THROTTLE POSITION SWITCH CIRCUIT)	• Ignition switch: ON (Engine stopped) • Closed throttle position switch circuit is tested when throttle is opened and closed fully. ("IDLE POSITION" is the test item name for the vehicles in which idle is selected by throttle position sensor.)	Throttle valve: opened	OFF	• Harness and connector • Throttle position sensor (Closed throttle position switch) • Throttle position sensor (Closed throttle position switch) adjustment • Throttle linkage • Verify operation in DATA MONITOR mode.
		Throttle valve: closed	ON	
THROTTLE POSI SEN CKT	• Ignition switch: ON (Engine stopped) • Throttle position sensor circuit is tested when throttle is opened and closed fully.	Range (Throttle valve fully opened — Throttle valve fully closed)	More than 3.0V	• Harness and connector • Throttle position sensor • Throttle position sensor adjustment • Throttle linkage • Verify operation in DATA MONITOR mode.
PARK/NEUT POSI SW CKT	• Ignition switch: ON (Engine stopped) • Inhibitor/Neutral position switch circuit is tested when shift lever is manipulated.	OUT OF N/P-RANGE	OFF	• Harness and connector • Neutral position switch/ Inhibitor switch • Linkage + Inhibitor switch adjustment
		IN N/P-RANGE	ON	
FUEL PUMP CIRCUIT	• Ignition switch: ON (Engine stopped) • Fuel pump circuit is tested by checking the pulsation in fuel pressure when fuel tube is pinched.	There is pressure pulsation on the fuel feed hose.		• Harness and connector • Fuel pump • Fuel pump relay • Fuel filter clogging • Fuel level
EGRC SOL/V CIRCUIT	• Ignition switch: ON (Engine stopped) • EGRC-solenoid valve circuit is tested by checking solenoid valve operating noise.	The solenoid valve makes an operating sound every 3 seconds.		• Harness and connector • EGRC-solenoid valve
START SIGNAL CIRCUIT	• Ignition switch: ON → START • Start signal circuit is tested when engine is started by operating the starter. Battery voltage and engine coolant temperature before cranking, and average battery voltage, mass air flow sensor output voltage and cranking speed during cranking are displayed.	Start signal: OFF → ON		• Harness and connector • Ignition switch

CONSULT (Cont'd)

FUNCTION TEST ITEM	CONDITION	JUDGEMENT		CHECK ITEM (REMEDY)
PW/ST SIGNAL CIRCUIT	• Ignition switch: ON (Engine running) • Power steering circuit is tested when steering wheel is rotated fully and then set to a straight line running position.	Locked position	ON	• Harness and connector • Power steering oil pressure switch • Power steering oil pump
		Neutral position	OFF	
SWRL CONT S/V CIRCUIT	• Ignition switch: ON (Engine stopped) • Swirl control valve control solenoid valve circuit is tested by checking solenoid valve operating sound.	The solenoid valve makes an operating sound every 3 seconds.		• Harness and connector • Solenoid valve • Swirl control valve • Vacuum hose
VEHICLE SPEED SEN CKT	• Vehicle speed sensor circuit is tested when vehicle is running at a speed of 10 km/h (6 MPH) or higher.	Vehicle speed sensor input signal is greater than 4 km/h (2 MPH)		• Harness and connector • Vehicle speed sensor • Speedometer
IGN TIMING ADJ	• After warming up, idle the engine. • Ignition timing adjustment is checked by reading ignition timing with a timing light and checking whether it agrees with specifications.	The timing light indicates the same value on the screen.		• Adjust ignition timing (by moving camshaft position sensor or distributor) • Camshaft position sensor drive mechanism
MIXTURE RATIO TEST	• Air-fuel ratio feedback circuit (injection system, ignition system, vacuum system, etc.) is tested by examining the front heated oxygen sensor output at 2,000 rpm under non-loaded state.	Front heated oxygen sensor COUNT: More than 5 times during 10 seconds		• INJECTION SYS (Injector, fuel pressure regulator, harness or connector) • IGNITION SYS (Spark plug, power transistor, ignition coil, harness or connector) • VACUUM SYS (Intake air leaks) • Front heated oxygen sensor circuit • Front heated oxygen sensor operation • Fuel pressure high or low • Mass air flow sensor
POWER BALANCE	• After warming up, idle the engine. • Injector operation of each cylinder is stopped one after another, and resultant change in engine rotation is examined to evaluate combustion of each cylinder. (This is only displayed for models where a sequential multiport fuel injection system is used.)	Difference in engine speed is greater than 25 rpm before and after cutting off the injector of each cylinder.		• Injector circuit (Injector, harness or connector) • Ignition circuit (Spark plug, power transistor, ignition coil, harness or connector) • Compression • Valve timing

CONSULT (Cont'd)

FUNCTION TEST ITEM	CONDITION	JUDGEMENT	CHECK ITEM (REMEDY)
IACV-AAC/V SYSTEM	● After warming up, idle the engine. ● IACV-AAC valve system is tested by detecting change in engine speed when IACV-AAC valve opening is changed to 0%, 20% and 80%.	Difference in engine speed is greater than 150 rpm between when valve opening is at 80% and at 20%.	● Harness and connector ● IACV-AAC valve ● Air passage restriction between air inlet and IACV-AAC valve ● IAS (Idle adjusting screw) adjustment
★EVAP (SMALL LEAK)	● After warming up, idle the engine etc. ● EVAP system is tested by using the evaporative gas pressure in the fuel tank or engine intake manifold pressure.	● EVAP control system has no leak. ● EVAP control system operates properly.	● Incorrect fuel tank vacuum relief valve ● Incorrect fuel filler cap used ● Fuel filler cap remains open or fails to close. ● Foreign matter caught in fuel filler cap. ● Leak is in line between intake manifold and EVAP canister purge control valve. ● Foreign matter caught in EVAP canister vent control valve. ● EVAP canister or fuel tank leaks ● EVAP purge line tube leaks ● EVAP purge line rubber tube bent. ● Blocked or bent rubber tube to EVAP control system pressure sensor ● EVAP canister purge control valve ● EVAP canister purge volume control valve ● EVAP canister purge control solenoid valve ● Absolute pressure sensor ● Tank fuel temperature sensor ● MAP/BARO switch solenoid valve ● Blocked or bent rubber tube to MAP/BARO switch solenoid valve ● Loose or disconnected rubber tube ● O-ring of EVAP canister vent control valve is missing or damaged

★: Always select "SINGLE TEST" with CONSULT when performing the "FUNCTION TEST".

CONSULT (Cont'd)

REAL TIME DIAGNOSIS IN DATA MONITOR MODE

CONSULT has two kinds of triggers and they can be selected by touching "SETTING" in "DATA MONITOR" mode.

1. "AUTO TRIG" (Automatic trigger):
   - The malfunction will be identified on the CONSULT screen in real time.
     In other words, DTC/1st trip DTC and malfunction item will be displayed at the moment the malfunction is detected by ECM.
     DATA MONITOR can be performed continuously until a malfunction is detected. However, DATA MONITOR cannot continue any longer after the malfunction detection.
2. "MANU TRIG" (Manual trigger):
   - DTC/1st trip DTC and malfunction item will not be displayed automatically on CONSULT screen even though a malfunction is detected by ECM.
     DATA MONITOR can be performed continuously even though a malfunction is detected.

Use these triggers as follows:

1. "AUTO TRIG"
   - While trying to detect the DTC/1st trip DTC by performing the "DTC CONFIRMATION PROCEDURE", be sure to select to "DATA MONITOR (AUTO TRIG)" mode. You can confirm the malfunction at the moment it is detected.
   - While narrowing down the possible causes, CONSULT should be set in "DATA MONITOR (AUTO TRIG)" mode, especially in case the incident is intermittent.
     When you are inspecting the circuit by gently shaking (or twisting) the suspicious connectors, components and harness in the "DTC CONFIRMATION PROCEDURE", the moment a malfunction is found the DTC will be displayed. (Refer to GI section, "Incident Simulation Tests" in "HOW TO PERFORM EFFICIENT DIAGNOSIS FOR AN ELECTRICAL INCIDENT".)
2. "MANU TRIG"
   - If the malfunction is displayed as soon as "DATA MONITOR" is selected, reset CONSULT to "MANU TRIG". By selecting "MANU TRIG" you can monitor and store the data. The data can be utilized for further diagnosis, such as a comparison with the value for the normal operating condition.

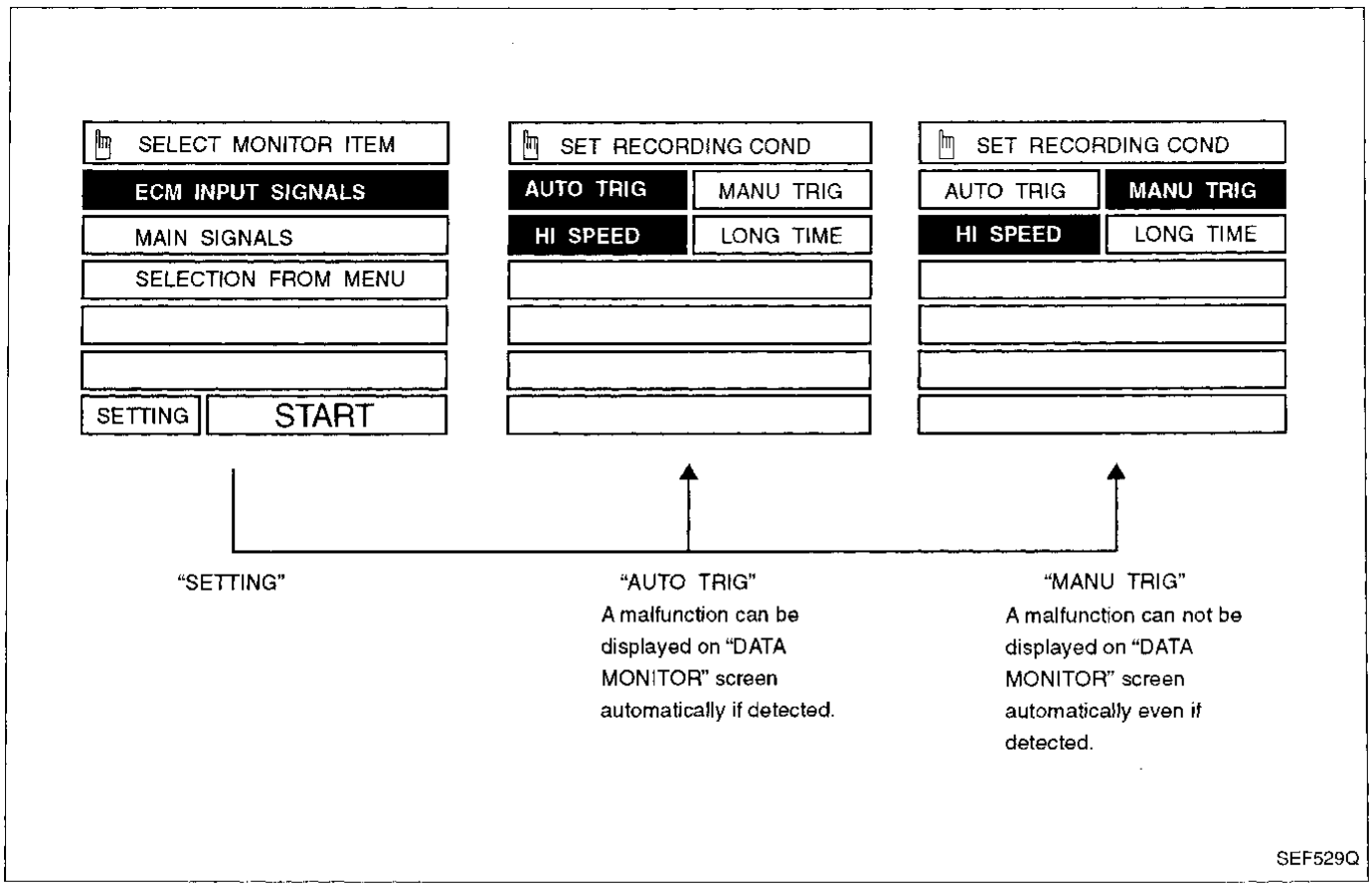

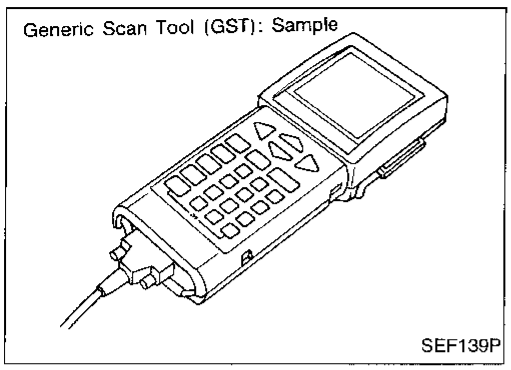

Generic Scan Tool (GST)

DESCRIPTION

Generic Scan Tool (OBDII scan tool) complying with SAE J1978 has 7 different functions explained on the next page.
ISO9141 is used as the protocol.
The name "GST" or "Generic Scan Tool" is used in this service manual.

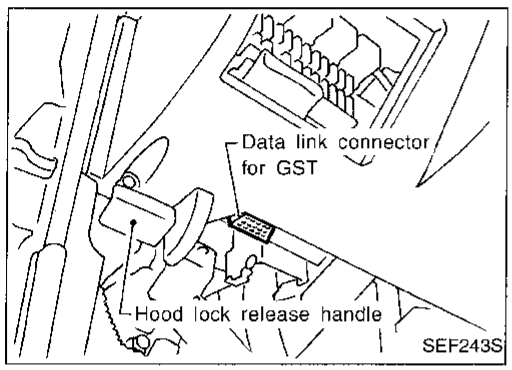

GST INSPECTION PROCEDURE

1. Turn off ignition switch.
2. Connect "GST" to data link connector for GST. (Data link connector for GST is located under LH dash panel near the fuse box cover.)

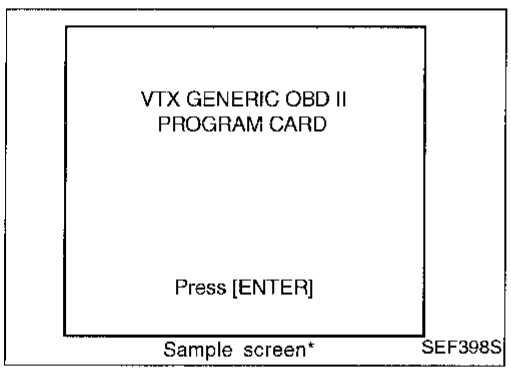

3. Turn ON ignition switch.
4. Enter the program according to instruction on the screen or in the operation manual.

(*: Regarding GST screens in this section, sample screens are shown.)

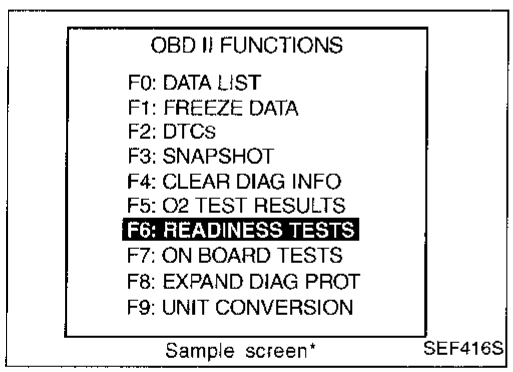

5. Perform each diagnostic mode according to each service procedure.

For further information, see the GST Operation Manual of the tool maker.

FUNCTION

Diagnostic test mode		Function
MODE 1	READINESS TESTS	This mode gains access to current emission-related data values, including analog inputs and outputs, digital inputs and outputs, and system status information.
MODE 2	(FREEZE DATA)	This mode gains access to emission-related data value which were stored by ECM during the freeze frame. [For details, refer to "Freeze frame data and 1st trip freeze frame data" (EC-56).]
MODE 3	DTCs	This mode gains access to emission-related power train trouble codes which were stored by ECM.
MODE 4	CLEAR DIAG INFO	This mode can clear all emission-related diagnostic information. This includes: ● Clear number of diagnostic trouble codes (MODE 1) ● Clear diagnostic trouble codes (MODE 3) ● Clear trouble code for freeze frame data (MODE 1) ● Clear freeze frame data (MODE 2) ● Clear heated oxygen sensor test data (MODE 5) ● Reset status of system monitoring test (MODE 1) ● Clear on board monitoring test results (MODE 6 and 7)
MODE 5	(O2 TEST RESULTS)	This mode gains access to the on board heated oxygen sensor monitoring test results.
MODE 6	(ON BOARD TESTS)	This mode accesses the results of on board diagnostic monitoring tests of specific components/systems that are not continuously monitored.
MODE 7	(ON BOARD TESTS)	This mode enables the off board test drive to obtain test results for emission-related powertrain components/systems that are continuously monitored during normal driving conditions.

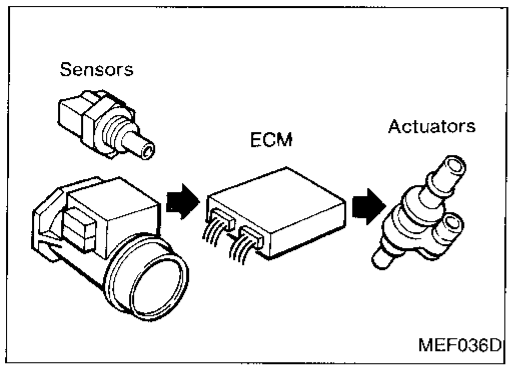

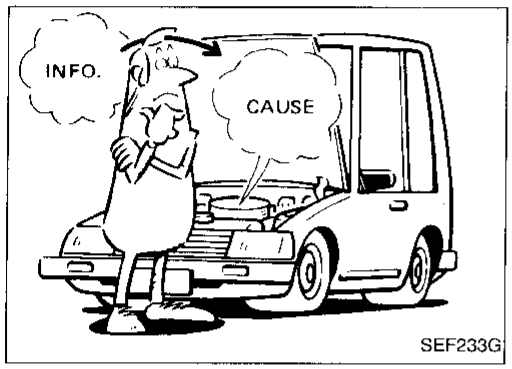

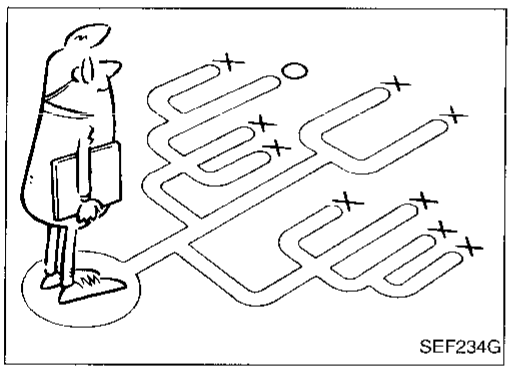

KEY POINTS

WHAT ..... Vehicle & engine model
WHEN ..... Date, Frequencies
WHERE..... Road conditions
HOW ..... Operating conditions, Weather conditions, Symptoms

SEF907L

Introduction

The engine has an ECM to control major systems such as fuel control, ignition control, idle air control system, etc. The ECM accepts input signals from sensors and instantly drives actuators. It is essential that both input and output signals are proper and stable. At the same time, it is important that there are no problems such as vacuum leaks, fouled spark plugs, or other problems with the engine.

It is much more difficult to diagnose a problem that occurs intermittently rather than continuously. Most intermittent problems are caused by poor electric connections or improper wiring. In this case, careful checking of suspected circuits may help prevent the replacement of good parts.

A visual check only may not find the cause of the problems. A road test with CONSULT (or GST) or a circuit tester connected should be performed. Follow the "Work Flow" on EC-70.

Before undertaking actual checks, take a few minutes to talk with a customer who approaches with a driveability complaint. The customer can supply good information about such problems, especially intermittent ones. Find out what symptoms are present and under what conditions they occur. A "Diagnostic Worksheet" like the example on the next page should be used.

Start your diagnosis by looking for "conventional" problems first. This will help troubleshoot driveability problems on an electronically controlled engine vehicle.

Diagnostic Worksheet

There are many operating conditions that lead to the malfunction of engine components. A good grasp of such conditions can make troubleshooting faster and more accurate.

In general, each customer feels differently about a problem. It is important to fully understand the symptoms or conditions for a customer complaint.

Utilize a diagnostic worksheet like the one on next page in order to organize all the information for troubleshooting.

Some conditions may cause the malfunction indicator lamp to come on steady or blink and DTC to be detected. Examples:

- Vehicle ran out of fuel, which caused the engine to misfire.
- Fuel filler cap was left off or incorrectly screwed on, allowing fuel to evaporate into the atmosphere [for models with EVAP (SMALL LEAK) diagnosis].

Diagnostic Worksheet (Cont'd)

WORKSHEET SAMPLE

Customer name MR/MS		Model & Year	VIN
Engine #		Trans.	Mileage
Incident Date		Manuf. Date	In Service Date
Fuel and fuel filler cap		☐ Vehicle ran out of fuel causing misfire ☐ Fuel filler cap was left off or incorrectly screwed on.	
Symptoms	☐ Startability	☐ Impossible to start ☐ No combustion ☐ Partial combustion ☐ Partial combustion affected by throttle position ☐ Partial combustion NOT affected by throttle position ☐ Possible but hard to start ☐ Others [ ]	
	☐ Idling	☐ No fast idle ☐ Unstable ☐ High idle ☐ Low idle ☐ Others [ ]	
	☐ Driveability	☐ Stumble ☐ Surge ☐ Knock ☐ Lack of power ☐ Intake backfire ☐ Exhaust backfire ☐ Others [ ]	
	☐ Engine stall	☐ At the time of start ☐ While idling ☐ While accelerating ☐ While decelerating ☐ Just after stopping ☐ While loading	
Incident occurrence		☐ Just after delivery ☐ Recently ☐ In the morning ☐ At night ☐ In the daytime	
Frequency		☐ All the time ☐ Under certain conditions ☐ Sometimes	
Weather conditions		☐ Not affected	
	Weather	☐ Fine ☐ Raining ☐ Snowing ☐ Others [ ]	
	Temperature	☐ Hot ☐ Warm ☐ Cool ☐ Cold ☐ Humid °F	
Engine conditions		☐ Cold ☐ During warm-up ☐ After warm-up Engine speed 0 2,000 4,000 6,000 8,000 rpm	
Road conditions		☐ In town ☐ In suburbs ☐ Highway ☐ Off road (up/down)	
Driving conditions		☐ Not affected ☐ At starting ☐ While idling ☐ At racing ☐ While accelerating ☐ While cruising ☐ While decelerating ☐ While turning (RH/LH) Vehicle speed 0 10 20 30 40 50 60 MPH	
Malfunction indicator lamp		☐ Turned on ☐ Not turned on	

Work Flow

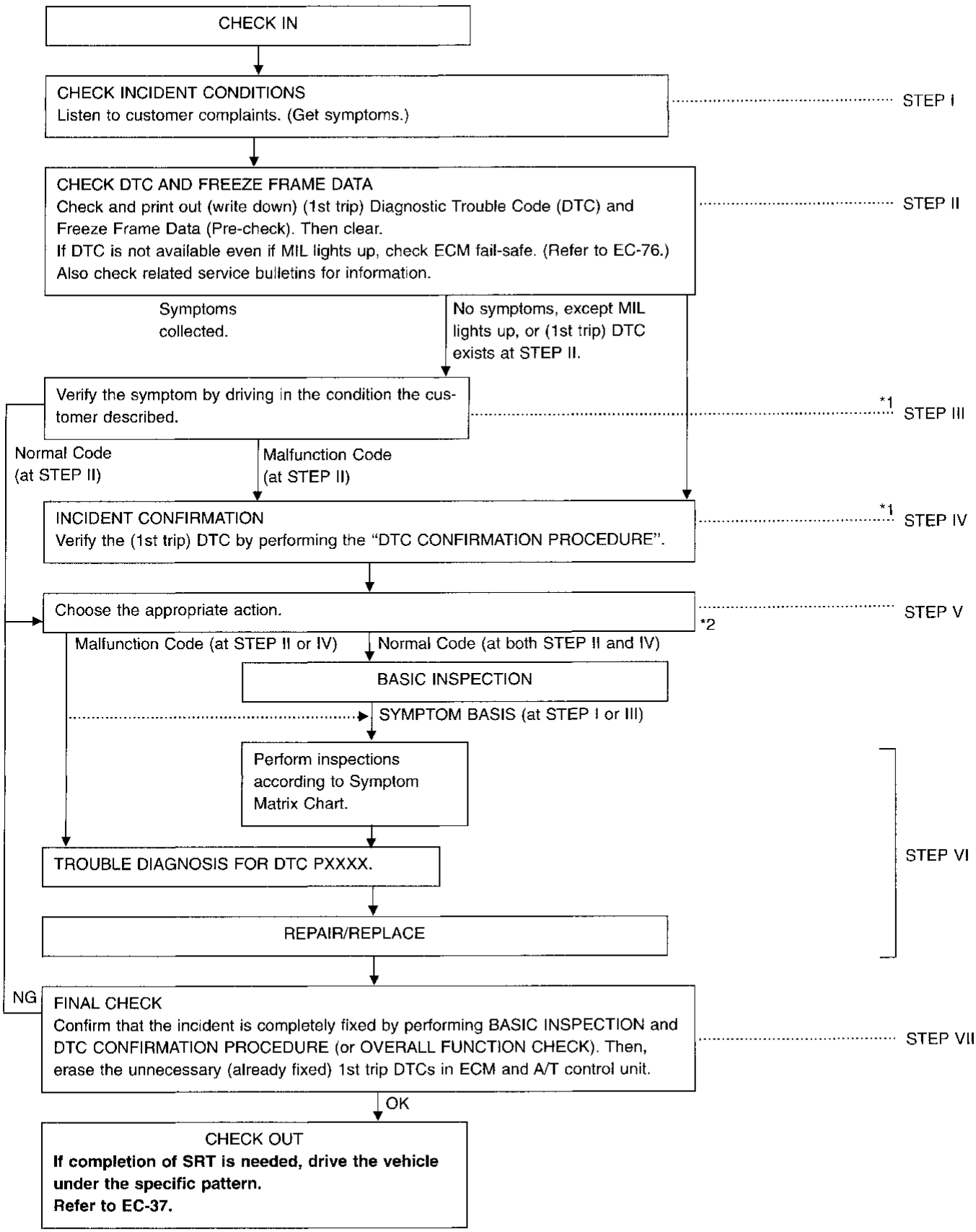

***1: If the incident cannot be duplicated, see "Incident Simulation Tests" of "HOW TO PERFORM EFFICIENT DIAGNOSIS FOR AN ELECTRICAL INCIDENT" in GI section.**

***2: If the on board diagnostic system cannot be performed, check main power supply and ground circuit (See TROUBLE DIAGNOSIS FOR POWER SUPPLY EC-89).**

Description for Work Flow

STEP	DESCRIPTION
STEP I	Get detailed information about the conditions and the environment when the incident/symptom occurred using the "DIAGNOSTIC WORK SHEET", EC-68.
STEP II	Before confirming the concern, check and write down (print out using CONSULT or Generic Scan Tool) the (1st trip) Diagnostic Trouble Code (DTC) and the (1st trip) freeze frame data, then erase the code and the data. (Refer to EC-43.) The (1st trip) DTC and the (1st trip) freeze frame data can be used when duplicating the incident at STEP III & IV. Study the relationship between the cause, specified by (1st trip) DTC, and the symptom described by the customer. (The "Symptom Matrix Chart" will be useful. See EC-77.) Also check related service bulletins for information.
STEP III	Try to confirm the symptom and under what conditions the incident occurs. The "DIAGNOSTIC WORK SHEET" and the freeze frame data are useful to verify the incident. Connect CONSULT to the vehicle in DATA MONITOR (AUTO TRIG) mode and check real time diagnosis results. If the incident cannot be verified, perform INCIDENT SIMULATION TESTS. (Refer to GI section.) If the malfunction code is detected, skip STEP IV and perform STEP V.
STEP IV	Try to detect the (1st trip) Diagnostic Trouble Code by driving in (or performing) the "DTC CONFIRMATION PROCEDURE". Check and read the (1st trip) DTC and (1st trip) freeze frame data by using CONSULT or Generic Scan Tool. During the (1st trip) DTC verification, be sure to connect CONSULT to the vehicle in DATA MONITOR (AUTO TRIG) mode and check real time diagnosis results. If the incident cannot be verified, perform INCIDENT SIMULATION TESTS. (Refer to GI section.) In case the "DTC CONFIRMATION PROCEDURE" is not available, perform the "OVERALL FUNCTION CHECK" instead. The (1st trip) DTC cannot be displayed by this check, however, this simplified "check" is an effective alternative. The "NG" result of the "OVERALL FUNCTION CHECK" is the same as the (1st trip) DTC detection.
STEP V	Take the appropriate action based on the results of STEP I through IV. If the malfunction code is indicated, proceed to TROUBLE DIAGNOSIS FOR DTC PXXXX. If the normal code is indicated, proceed to the BASIC INSPECTION on next page. Then perform inspections according to the Symptom Matrix Chart. (Refer to EC-77.)
STEP VI	Identify where to begin diagnosis based on the relationship study between symptom and possible causes. Inspect the system for mechanical binding, loose connectors or wiring damage using (tracing) "Harness Layouts". Gently shake the related connectors, components or wiring harness with CONSULT set in "DATA MONITOR (AUTO TRIG)" mode. Check the voltage of the related ECM terminals or monitor the output data from the related sensors with CONSULT. Refer to EC-79, 83. The "DIAGNOSTIC PROCEDURE" in EC section contains a description based on open circuit inspection. A short circuit inspection is also required for the circuit check in the DIAGNOSTIC PROCEDURE. For details, refer to GI section ("HOW TO PERFORM EFFICIENT DIAGNOSIS FOR AN ELECTRICAL INCIDENT", "Circuit Inspection"). Repair or replace the malfunctioning parts.
STEP VII	Once you have repaired the circuit or replaced a component, you need to run the engine in the same conditions and circumstances which resulted in the customer's initial complaint. Perform the "DTC CONFIRMATION PROCEDURE" and confirm the normal code [Diagnostic trouble code No. P0000 or 0505] is detected. If the incident is still detected in the final check, perform STEP VI by using a different method from the previous one. Before returning the vehicle to the customer, be sure to erase the unnecessary (already fixed) (1st trip) DTC in ECM and A/T control unit. (Refer to EC-43.)

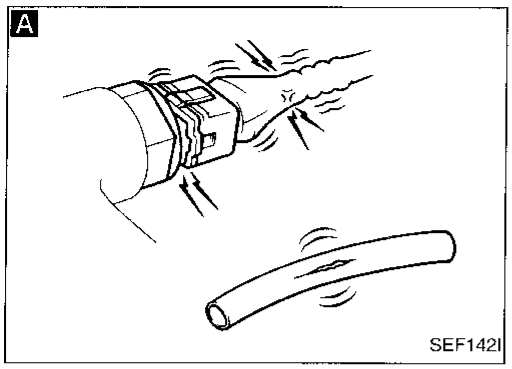

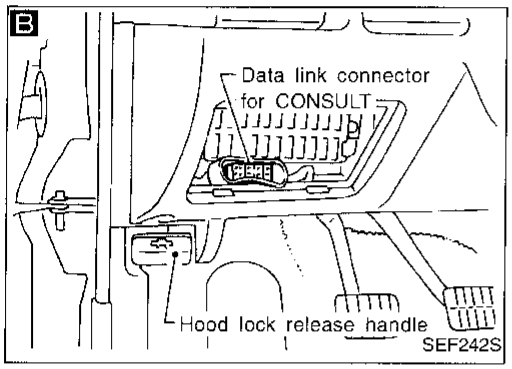

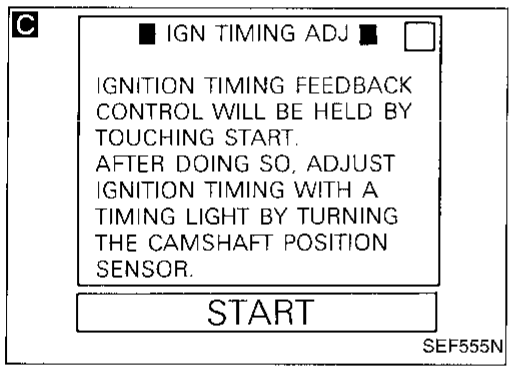

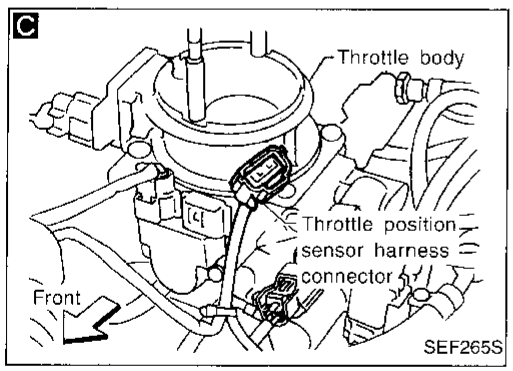

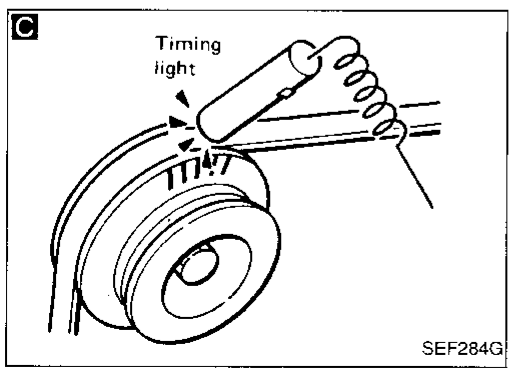

Basic Inspection

Precaution:

Perform Basic Inspection without electrical or mechanical loads applied;

- **Headlamp switch is OFF,**
- **Air conditioner switch is OFF,**
- **Rear window defogger switch is OFF,**
- **Steering wheel is in the straight-ahead position, etc.**

A

BEFORE STARTING

1. Check service records for any recent repairs that may indicate a related problem, or the current need for scheduled maintenance.
2. Open engine hood and check the following:
   - Harness connectors for improper connections
   - Vacuum hoses for splits, kinks, or improper connections
   - Wiring for improper connections, pinches, or cuts

↓

B

CONNECT CONSULT TO THE VEHICLE.

Connect "CONSULT" to the data link connector for CONSULT and select "ENGINE" from the menu. Refer to EC-53.

↓

DOES ENGINE START?

No → Go to **E** .

Yes ↓

C

CHECK IGNITION TIMING.

1. Warm up engine sufficiently.
2. Select "IGN TIMING ADJ" in "WORK SUPPORT" mode.
3. Touch "START".
4. Check ignition timing at idle using timing light.

   Ignition timing:

   M/T 10°±2° BTDC

   A/T 10°±2° BTDC (in "N" position)

NG → Adjust ignition timing by turning camshaft position sensor.

1. Warm up engine sufficiently.
2. Stop engine and disconnect throttle position sensor harness connector.
3. Start engine.
4. Check ignition timing at idle using timing light.

   Ignition timing:

   M/T 10°±2° BTDC

   A/T 10°±2° BTDC (in "N" position)

OK ↓

Ⓐ

(Go to next page.)

Basic Inspection (Cont'd)

D

■ IGN TIMING ADJ ■

IGNITION TIMING FEEDBACK CONTROL WILL BE HELD BY TOUCHING START.
AFTER DOING SO, ADJUST IGNITION TIMING WITH A TIMING LIGHT BY TURNING THE CAMSHAFT POSITION SENSOR.

START

SEF546N

D

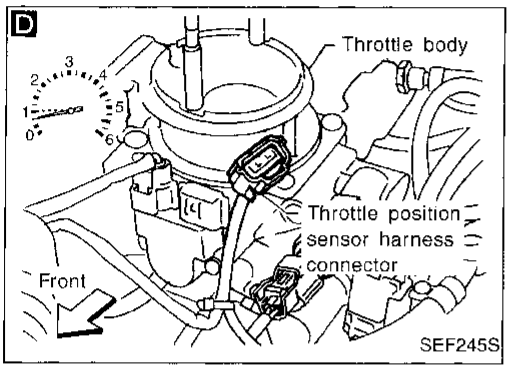

SEF245S

E

☆ MONITOR ☆ NO FAIL

THRTL POS SEN	1.2V
ENGINE SPEED	1000rpm
CLOSED THL/SW	ON

RECORD

SEF814T

E

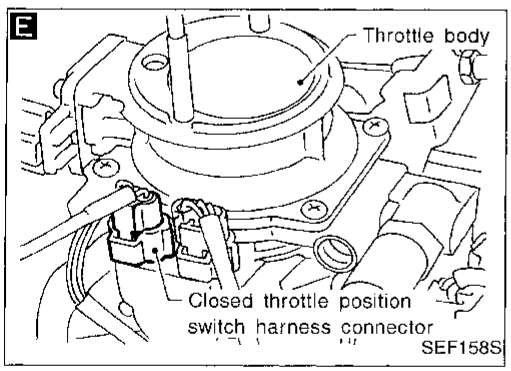

SEF158S

E

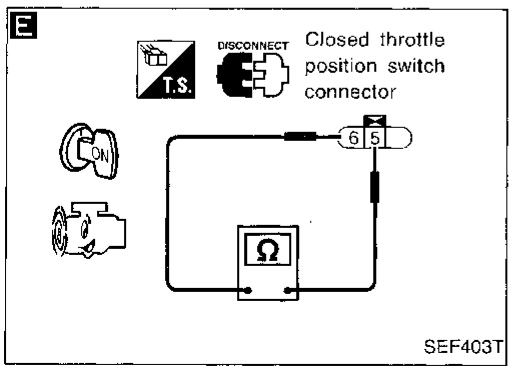

SEF403T

Ⓐ

D

CHECK IDLE SPEED ADJ. SCREW INITIAL SET RPM (BASE IDLE SPEED).

1. Select "IGN TIMING ADJ" in "WORK SUPPORT" mode.
2. When touching "START", does engine speed fall to 750±50 rpm (A/T in "N" position)?

— OR —

When disconnecting throttle position sensor harness connector, does engine run at 750±50 rpm (A/T in "N" position)?

NG → Adjust base idle speed by turning idle speed adjusting screw.

OK ↓

E

CHECK CLOSED THROTTLE POSITION SWITCH IDLE POSITION.

1. Select "A/T", then "DATA MONITOR" mode with CONSULT.
2. Select "ENGINE SPEED" and "CLOSED THL/SW" from the menu.
3. Read "CLOSED THL/SW" signal under the following condition:
   - Raise engine speed to 2,000 rpm.
   - Gradually lower engine speed.

"CLOSED THL/SW" signal should turn "ON" at 1,000±150 rpm with transaxle in "N" position.

— OR —

1. Disconnect throttle position sensor harness connector and closed throttle position switch harness connector.
2. Check continuity between closed throttle position switch terminals ⑤ and ⑥ under the following conditions.
   - Raise engine speed to 2,000 rpm.
   - Gradually lower engine speed.

Continuity should exist (closed throttle position switch closes) at 1,000±150 rpm with transaxle in "N" position.

NG → Adjust continuity signal by rotating throttle position sensor body.

RESET IDLE POSITION MEMORY.

1. Warm up engine sufficiently.
2. Select "CLSD THL/P SW" in "DATA MONITOR" mode (Manual trigger) with CONSULT, then stop engine.
3. Reconnect throttle position sensor harness connector and closed throttle position switch harness connector.
4. Turn ignition switch "ON".
5. Turn ignition switch "OFF" and wait at least 7 seconds.
6. Repeat steps 4. and 5. until "CLSD THL/P SW" in "DATA MONITOR" mode with CONSULT changes to "ON".
   Repeat steps 4. and 5. 20 times.

OK ↓

Reconnect throttle position sensor harness connector and closed throttle position switch harness connector.

Ⓑ

(Go to next page.)

Basic Inspection (Cont'd)

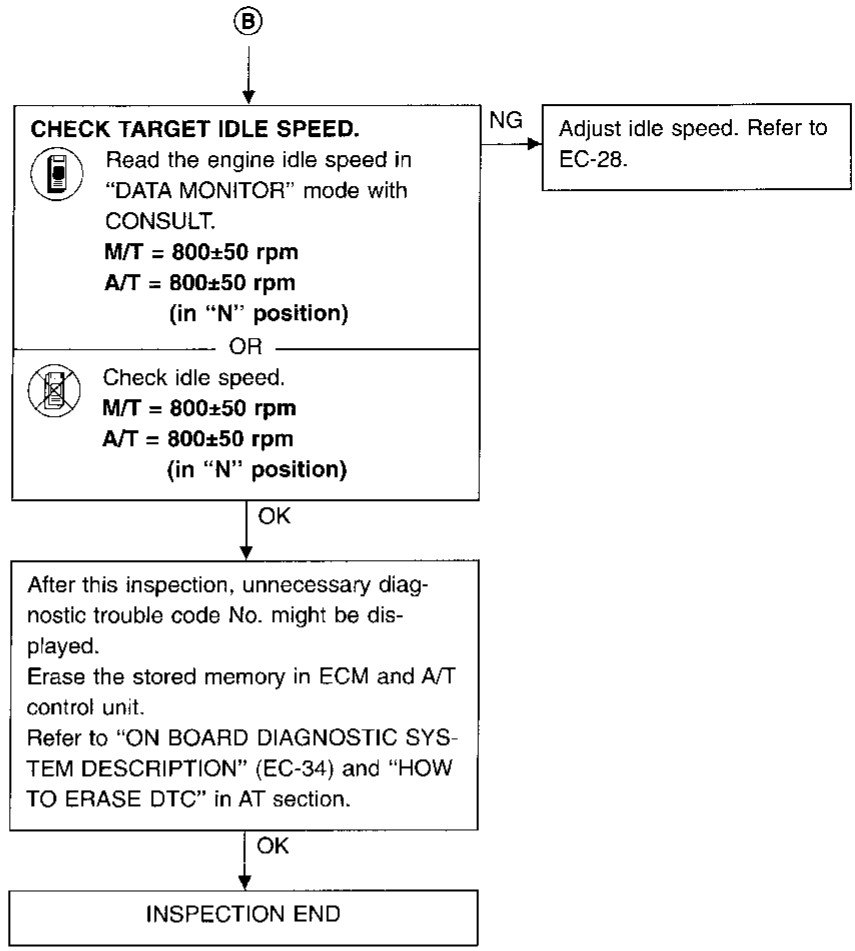

Diagnostic Trouble Code (DTC) Inspection Priority Chart

If some DTCs are displayed at the same time, perform inspections one by one based on the following priority chart.

Priority	Detected items (DTC)		
1	• ECM (P0605, 0301)	• Camshaft position sensor circuit (P0340, 0101)	• Engine coolant temperature sensor circuit (P0115, 0103) (P0125, 0908)
	• Mass air flow sensor circuit (P0100, 0102)	• Vehicle speed sensor circuit (P0500, 0104)	• Ignition signal circuit (P1320, 0201)
	• Throttle position sensor circuit (P0120, 0403)	• Intake air temperature sensor circuit (P0110, 0401)	• Park/Neutral position switch circuit (P0705, 1003)
	• EGRC-solenoid valve circuit (P1400, 1005)	• Tank fuel temperature sensor (P0180, 0402)	
2	• EGR temperature sensor circuit (P1401, 0305)	• Crankshaft position sensor circuit (P0335, 0802), (P1336, 0905)	• Front heated oxygen sensor circuit (P0130, 0303)
	• Absolute pressure sensor circuit (P0105, 0803)	• Front heated oxygen sensor heater circuit (P0135, 0901)	• Rear heated oxygen sensor circuit (P0136, 0707)
	• MAP/BARO switch solenoid valve circuit (P1105, 1302)	• EVAP control system pressure sensor circuit (P0450, 0704)	• EVAP canister purge volume control valve circuit (P1445, 1008)
	• EVAP canister purge control valve/solenoid valve circuit (P0443, 0807)	• EVAP canister vent control valve circuit (P0446, 0903)	• EVAP control system purge flow monitoring (P1447, 0111)
	• Vacuum cut valve bypass valve (P1441, 0801)	• T/C clutch solenoid valve (P1550, 0904)	• Closed throttle position switch circuit (P0510, 0203)
	• Rear heated oxygen sensor heater circuit (P0141, 0902)	• Swirl control valve control vacuum check switch (P1165, 0112)	
3	• EGR function (P0400, 0302)	• Misfire (P0300 - P0304, 0701 - 0605)	• Fuel injection system function (P0172, 0114), (P0171, 0115)
	• EGRC-BPT valve function (P0402, 0306)	• Closed loop control (P0130, 0307)	• Three way catalyst function (P0420, 0702)
	• IACV-AAC valve circuit (P0505, 0205)		• EVAP control system (small leak) (P0440, 0705)
	• Swirl control valve control solenoid valve (P1130, 1004)		

Fail-Safe Chart

The ECM enters fail-safe mode, if any of the following DTCs is recorded due to the open or short circuit. When the ECM enters the fail-safe mode, the MIL illuminates.

DTC No.		Detected items	Engine operating condition in fail-safe mode
CONSULT GST	ECM*		
P0100	0102	Mass air flow sensor circuit	Engine speed will not rise more than 2,400 rpm due to the fuel cut.
P0110	0401	Intake air temperature sensor circuit	The ECM controls on the assumption that the intake air temperature is 20°C (68°F).
P0115	0103	Engine coolant temperature sensor circuit	Engine coolant temperature will be determined by ECM based on the time after turning ignition switch "ON" or "START". CONSULT displays the engine coolant temperature decided by ECM. Condition: Just as ignition switch is turned ON or START — Engine coolant temperature decided (CONSULT display): 20°C (68°F) Condition: More than approx. 6 minutes after ignition ON or START — Engine coolant temperature decided (CONSULT display): 80°C (176°F) Condition: Except as shown above — Engine coolant temperature decided (CONSULT display): 20 - 80°C (68 - 176°F) (Depends on the time)
P0120	0403	Throttle position sensor circuit	Throttle position will be determined based on the injected fuel amount and the engine speed. Therefore, acceleration will be poor. Condition: When engine is idling — Driving condition: Normal Condition: When accelerating — Driving condition: Poor acceleration
Unable to access ECCS	Unable to access Diagnostic Test Mode II	ECM	**ECM fail-safe activating condition** The computing function of the ECM was judged to be malfunctioning. When the fail-safe system activates (i.e., if the ECM detects a malfunction condition in the CPU of ECM), the MALFUNCTION INDICATOR LAMP on the instrument panel lights to warn the driver. However it is not possible to access ECCS and DTC cannot be confirmed. **Engine control with ECM fail-safe** When ECM fail-safe is operating, fuel injection, ignition timing, fuel pump operation and IACV-AAC valve operation are controlled under certain limitations. **Engine speed**: **Engine speed will not rise more than 3,000 rpm** Fuel injection: Simultaneous multiport fuel injection system Ignition timing: Ignition timing is fixed at the preset valve Fuel pump: Fuel pump relay is "ON" when engine is running and "OFF" when engine stalls IACV-AAC valve: Full open Replace ECM, if ECM fail-safe condition is confirmed.

*: In Diagnostic Test Mode II (Self-diagnostic results)

Symptom Matrix Chart

			SYMPTOM															Reference page
			HARD/NO START/RESTART (EXCP. HA)	ENGINE STALL	HESITATION/SURGING/FLAT SPOT	SPARK KNOCK/DETONATION	LACK OF POWER/POOR ACCELERATION	HIGH IDLE/LOW IDLE	ROUGH IDLE/HUNTING	IDLING VIBRATION	SLOW/NO RETURN TO IDLE	OVERHEATS/WATER TEMPERATURE HIGH	EXCESSIVE FUEL CONSUMPTION	EXCESSIVE OIL CONSUMPTION	BATTERY DEAD (UNDER CHARGE)	OVERCOOLS	OVERCHARGING	
Warranty Symptom Code			AA	AB	AC	AD	AE	AF	AG	AH	AJ	AK	AL	AM	HA	1P	1X	
Basic engine control system	Fuel	Fuel pump circuit	●	●	●	○	●		●	○			○		○			EC-309
		Fuel pressure regulator system	●	●	●	○	●	○	●	●	○		●					EC-25
		Injector circuit	●	●	●	○	●		●	●			●					EC-303
		Evaporative emission system	○	○	○	○	●	○	○	○	○		○					EC-20
	Air	Positive crankcase ventilation system	○	○	○	○	●	○	○	○	○		○	○				EC-24
		Incorrect idle speed adjustment	○	○				○	○	○	○		○					EC-28
		Swirl control valve circuit		○	○					●								EC-243
		IACV-AAC valve circuit	●	●	●	○	●	●	●	●	●		○		○			EC-221
		IACV-FICD solenoid valve circuit	○	○	○	○	○	○	○	○	○		○					EC-317
	Ignition	Incorrect ignition timing adjustment	○	○	●	●	●		●	●			●					EC-28
		Ignition circuit	●	●	●	●	●		●	●			●					EC-256
	EGR	EGRC-solenoid valve circuit		○	●	○	○						○					EC-267
		EGR system	●	●	●	●	●	●	●	●	○		●					EC-176
	Main power supply and ground circuit		●	●	●	○	○		○	○		○	○		○			EC-89
	Air conditioner circuit		○	○	○	○	○	○	○	○	○		○		○			HA section
ECCS system	ECCS	Camshaft position sensor circuit	●	●	●	●	●		○	○			○					EC-171
		Mass air flow sensor circuit	●	●	●	●	●		●	○			○					EC-93
		Front heated oxygen sensor circuit		●	●	○	●		●	○			●					EC-129
		Engine coolant temperature sensor circuit	●	●	●	○	●	●	●	○	○		●					EC-113, 124
		Throttle position sensor circuit		●	●		●	●	●	●	●		●					EC-118
		Incorrect throttle position sensor adjustment		●	○		○	●	○	○	●		○					EC-72
		Vehicle speed sensor circuit		○	○		○						○					EC-217
		ECM	○	○	○	○	○	○	○	○	○	○	○					EC-76, 230
		Start signal circuit	○															EC-306
		Park/Neutral position switch circuit			○		○		○	○			○					EC-232
		Power steering oil pressure switch circuit		○					○	○								EC-313

● ; High Possibility Item
○; Low Possibility Item

(continued on next page)

Symptom Matrix Chart (Cont'd)

SYSTEM — Engine mechanical & other		SYMPTOM															Reference page
		HARD/NO START/RESTART (EXCP. HA)	ENGINE STALL	HESITATION/SURGING/FLAT SPOT	SPARK KNOCK/DETONATION	LACK OF POWER/POOR ACCELERATION	HIGH IDLE/LOW IDLE	ROUGH IDLE/HUNTING	IDLING VIBRATION	SLOW/NO RETURN TO IDLE	OVERHEATS/WATER TEMPERATURE HIGH	EXCESSIVE FUEL CONSUMPTION	EXCESSIVE OIL CONSUMPTION	BATTERY DEAD (UNDER CHARGE)	OVERCOOLS	OVERCHARGING	
Warranty Symptom Code		AA	AB	AC	AD	AE	AF	AG	AH	AJ	AK	AL	AM	HA	1P	1X	
Fuel	Fuel tank	●	●														
	Fuel piping	●	●	○	○	●		○	○			○					
	Vapor lock		○														
	Valve deposit	○	○	○	○	○		○	○			○					
	Poor fuel (Heavy weight gasoline, Low octane)	○	○	○	○	○		○	○			○					—
Air	Air duct		○	○		○		○	○			○					
	Air cleaner		○	●		●		●	○			○					
	Air leakage from air duct (Mass air flow sensor — throttle body)	○	○	○	○	○	○	○	○	○		○					
	Throttle body, Throttle wire	○	●	●		○	●	●	○	○		○					FE section
	Air leakage from intake manifold/ Collector/Gasket	○	●	○	○	○	○	●	○	○		●					—
Cranking	Battery	○	○	○		○		○	○			○		○		○	
	Alternator circuit	○	○	○		○		○	○			○		○		○	EL section
	Starter circuit	●															
	Flywheel/Drive plate	●															—
	Clutch interlock switch	●															CL section
	Inhibitor switch	●															AT section
Engine	Cylinder head	●	○	●	○	○		●	○			○					
	Cylinder head gasket	○	○	○	○	○		●	○		●	○	○				
	Cylinder block	○	○	○	○	●		○	○			○	○				
	Piston	○	○	○	○	○		○	●			○	●				
	Piston ring	○	○	○	○	●		●	○			○	●				
	Connecting rod	●	○	○	○	○		○	○			○					
	Bearing	●	●	○	●	○		○	●			○					
	Crankshaft	○	○	○	○	○		○	○			○					
Valve mechanism	Timing chain	●	○	●	○	●		○	○			○					
	Camshaft	●	○	○	○	○		○	○			○					
	Intake valve	○	●	●	○	○		●	○			○	○				
	Exhaust valve	●	○	●	○	●		●	○			○	●				—
Exhaust	Exhaust manifold/Tube/Muffler/Gasket	○	●	●	●	●		●	○			●					
	Three way catalyst	○	●	○	○	●		○	○			○					
Lubrication	Oil pan/Oil strainer/Oil pump/Oil filter/Oil gallery	●	○	○	●	●		○	○			○	●				
	Oil level (Low)/Filthy oil	○	○	○	○	○		○	○			○	○				
Cooling	Radiator/Hose/Radiator filler cap	○	○	○	○	○		○	○		●	○					
	Thermostat	○	○	○	○	○	○	●	○	○	●	○			○		
	Water pump	●	○	○	○	○		○	○		●	○					
	Water gallery	○	○	○	○	○		○	○		○	○					
	Cooling fan	○	○	○	○	●	○	●	○	○	●	○			○		
	Coolant level (low)/Contaminated coolant	○	○	○	○	○		○	○		○	○					

● ; High Possibility Item
○; Low Possibility Item

CONSULT Reference Value in Data Monitor Mode

Remarks:

- Specification data are reference values.
- Specification data are output/input values which are detected or supplied by the ECM at the connector.
  - * Specification data may not be directly related to their components signals/values/operations.
  - i.e. Adjust ignition timing with a timing light before monitoring IGN TIMING, because the monitor may show the specification data in spite of the ignition timing not being adjusted to the specification data. This IGN TIMING monitors the data calculated by the ECM according to the signals input from the camshaft position sensor and other ignition timing related sensors.
- If the real-time diagnosis results are NG and the on board diagnostic system results are OK when diagnosing the mass air flow sensor, first check to see if the fuel pump control circuit is normal.

MONITOR ITEM	CONDITION		SPECIFICATION
CMPS-RPM (POS)	● Tachometer: Connect ● Run engine and compare tachometer indication with the CONSULT value.		Almost the same speed as the CONSULT value.
CMPS-RPM (REF)			
MAS AIR/FL SE	● Engine: After warming up ● Air conditioner switch OFF ● Shift lever "N" ● No-load	idle	1.3 - 1.7V
		2,500 rpm	1.7 - 2.1V
COOLAN TEMP/S	● Engine: After warming up		More than 70°C (158°F)
FR O2 SENSOR	● Engine: After warming up	Maintaining engine speed at 2,000 rpm	0 - 0.3V ↔ Approx. 0.6 - 1.0V
FR O2 MNTR			LEAN ↔ RICH Changes more than 5 times during 10 seconds.
RR O2 SENSOR	● Engine: After warming up	Maintaining engine speed at 2,000 rpm	0 - 0.3V ↔ Approx. 0.6 - 1.0V
RR O2 MNTR			LEAN ↔ RICH
VHCL SPEED SE	● Turn drive wheels and compare speedometer indication with the CONSULT value		Almost the same speed as the CONSULT value
BATTERY VOLT	● Ignition switch: ON (Engine stopped)		11 - 14V
THRTL POS SEN	● Ignition switch: ON (Engine stopped)	Throttle valve fully closed	0.3 - 0.7V
		Throttle valve fully opened	Approx. 4.0V
EGR TEMP SEN	● Engine: After warming up		Less than 4.5V
START SIGNAL	● Ignition switch: ON → START → ON		OFF → ON → OFF
CLSD THL/P SW	● Ignition switch: ON (Engine stopped)	Throttle valve: Idle position	ON
		Throttle valve: Slightly open	OFF
AIR COND SIG	● Engine: After warming up, idle the engine	Air conditioner switch OFF	OFF
		Air conditioner switch ON (Compressor operates.)	ON
P/N POSI SW	● Ignition switch: ON	Shift lever "P" or "N"	ON
		Except above	OFF
PW/ST SIGNAL	● Engine: After warming up, idle the engine	Steering wheel in neutral position (forward direction)	OFF
		The steering wheel is turned	ON
IGNITION SW	● Ignition switch ON → OFF → ON		ON → OFF → ON
SWL CON VC SW	● Engine is running at a speed of less than 3,600 rpm.		OFF
	● Except above		ON
INJ PULSE	● Engine: After warming up ● Air conditioner switch OFF ● Shift lever "N" ● No-load	Idle	2.4 - 3.2 msec.
		2,000 rpm	1.9 - 3.2 msec.

CONSULT Reference Value in Data Monitor Mode (Cont'd)

MONITOR ITEM	CONDITION		SPECIFICATION
B/FUEL SCHDL	● Engine: After warming up ● Air conditioner switch: OFF ● Shift lever "N" ● No-load	Idle	1.0 - 1.6 msec
		2,000 rpm	0.7 - 1.3 msec
IGN TIMING		Idle	10° BTDC
		2,000 rpm	More than 25° BTDC
IACV-AAC/V		Idle	20 - 40%
		2,000 rpm	—
PURG VOL C/V		Vehicle stopped	0 step
		Vehicle running	—
A/F ALPHA	● Engine: After warming up	Maintaining engine speed at 2,000 rpm	52 - 159%
EVAP SYS PRES	● Ignition switch: ON		Approx. 3.4V
AIR COND RLY	● Air conditioner switch: OFF → ON		OFF → ON
FUEL PUMP RLY	● Ignition switch is turned to ON (Operates for 5 seconds) ● Engine running and cranking ● When engine is stopped (Stops in 1.0 seconds)		ON
	● Except as shown above		OFF
SWRL CONT S/V	● Engine is running at a speed of less than 3,600 rpm.		ON
	● Except above		OFF
EGRC SOL/V	● Engine: After warming up ● Air conditioner switch: OFF ● Shift lever: "N" ● No-load	Idle	ON
		Revving up to 1,500 - 2,000 rpm	OFF
VENT CONT/V	● Ignition switch: ON		OFF
TCC SOL/V	● Engine speed: Idle ● Engine coolant temperature below 40°C (104°F)		ON
	● Engine: After warming up ● Engine coolant temperature above 40°C (104°F)	2,000 rpm	OFF
FR O2 HEATER	● Engine speed: Idle		ON
	● Engine speed: Above 3,000 rpm		OFF
VC/V BYPASS/V	● Ignition switch: ON		OFF
PURG CONT S/V	● Engine: After warming up	Idle	OFF
		2,000 rpm	ON
RR O2 HEATER	● Engine speed: Below 6,000 rpm		ON
	● Ignition switch: ON (Engine stopped)		OFF
CAL/LD VALUE	● Engine: After warming up ● Air conditioner switch: OFF ● Shift lever "N" ● No-load	Idle	16.8 - 34.7% (2WD models) 15.9 - 33.2% (4WD models)
		2,500 rpm	14.1 - 27.6 % (2WD models) 13.3 - 26.1 % (4WD models)
ABSOL TH·P/S	● Ignition switch: ON (Engine stopped)	Throttle valve fully closed	0.0%
		Throttle valve fully opened	Approx. 84%
MASS AIRFLOW	● Engine: After warming up ● Air conditioner switch: OFF ● Shift lever "N" ● No-load	Idle	1.8 - 6.5 g·m/s (2WD models) 2.1 - 6.0 g·m/s (4WD models)
		2,500 rpm	7.7- 15.0 g·m/s (2WD models) 6.8 - 13.3 g·m/s (4WD models)
MAP/BARO SW/V	● Ignition switch: ON		BARO
	● Engine speed: Idle (More than 5 seconds after starting engine)		MAP
ABSOL PRES/SE	● Engine: After warming up	Engine is not running	Approx. 4.4V
		Idle (More than 5 seconds after starting engine)	Approx. 1.2V

Major Sensor Reference Graph in Data Monitor Mode

The following are the major sensor reference graphs in "DATA MONITOR" mode.
(Select "HI SPEED" in "DATA MONITOR" with CONSULT.)

THRTL POS SEN, ABSOL TH·P/S, CLSD THL/P SW

Below is the data for "THRTL POS SEN", "ABSOL TH·P/S" and "CLSD THL/P SW" when depressing the accelerator pedal with the ignition switch "ON".
The signal of "THRTL POS SEN" and "ABSOL TH·P/S" should rise gradually without any intermittent drop or rise after "CLSD THL/P SW" is changed from "ON" to "OFF".

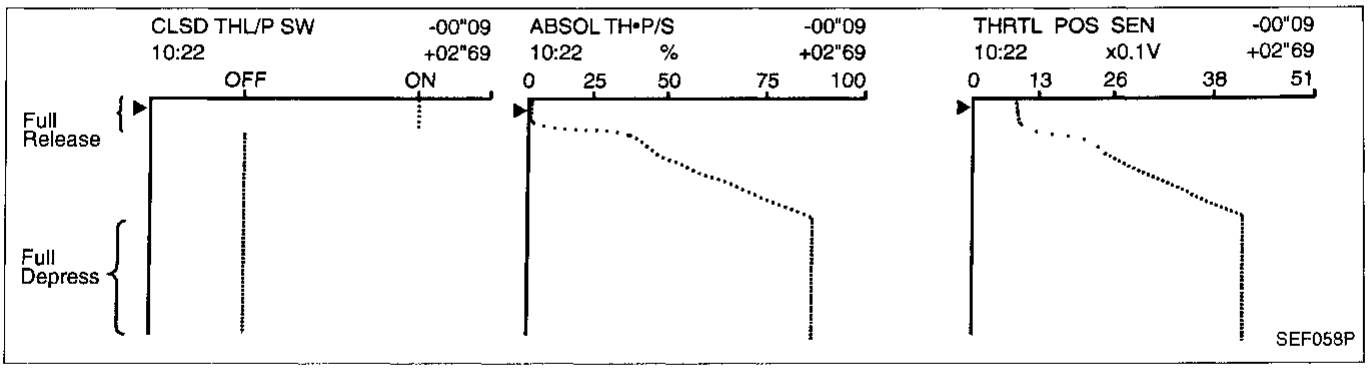

CMPS·RPM (REF), MAS AIR/FL SE, THRTL POS SEN, RR O2 SENSOR, FR O2 SENSOR, INJ PULSE

Below is the data for "CMPS·RPM (REF)", "MAS AIR/FL SE", "THRTL POS SEN", "RR O2 SENSOR", "FR O2 SENSOR" and "INJ PULSE" when revving quickly up to 4,800 rpm under no load after warming up engine sufficiently.
Each value is for reference, the exact value may vary.

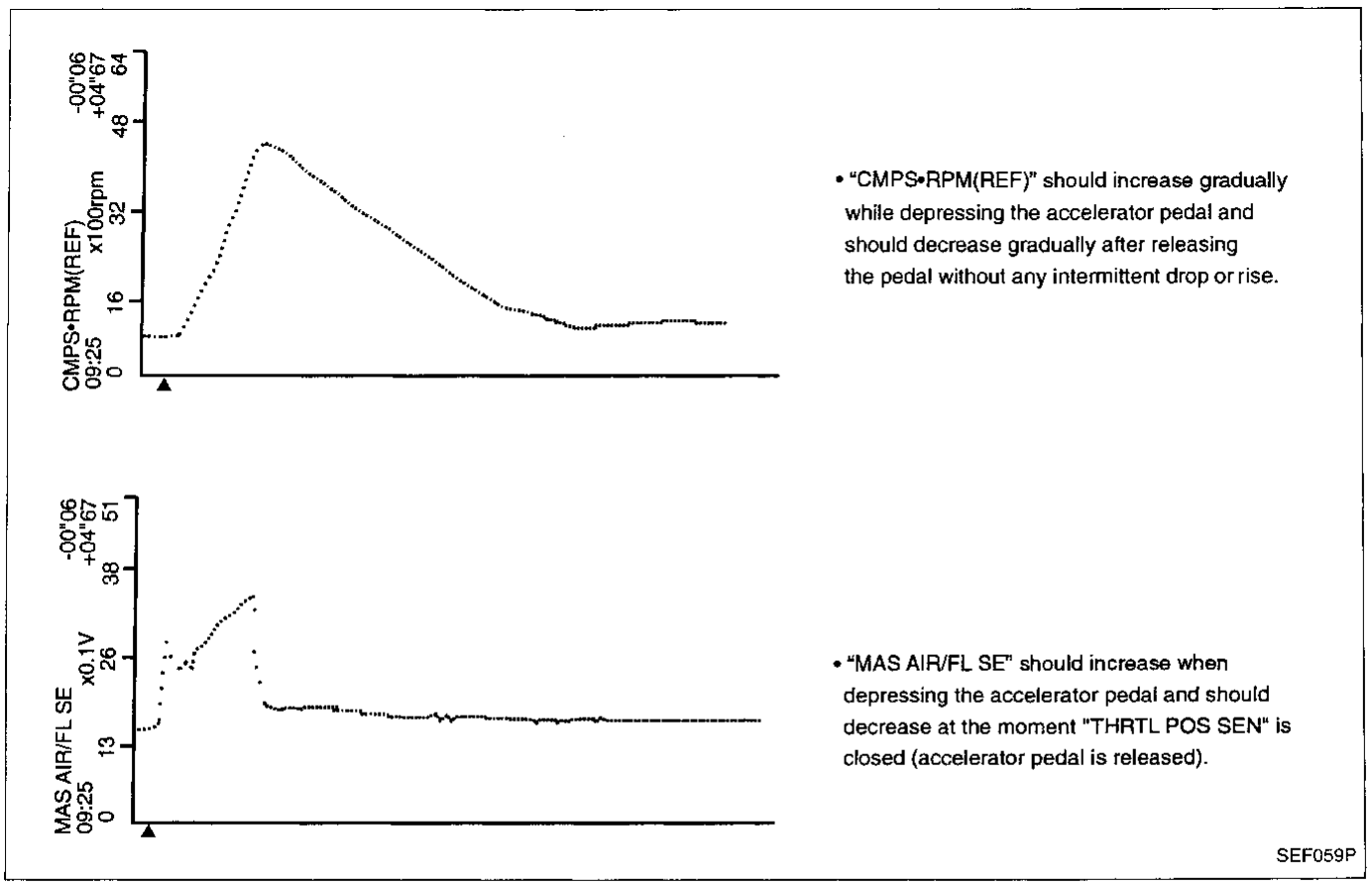

Major Sensor Reference Graph in Data Monitor Mode (Cont'd)

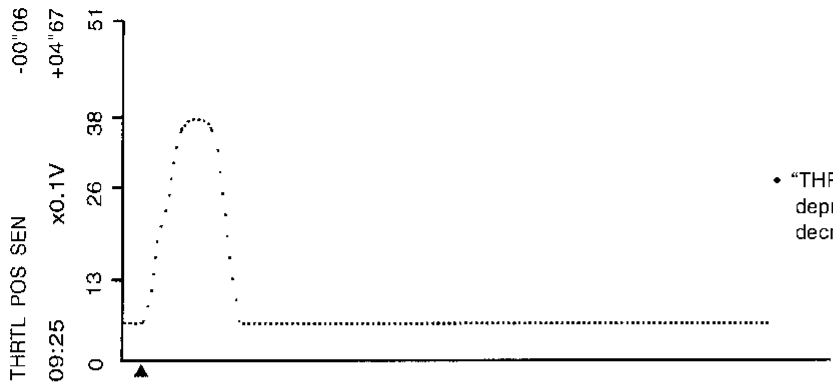

- "THRTL POS SEN" should increase while depressing the accelerator pedal and should decrease while releasing it.

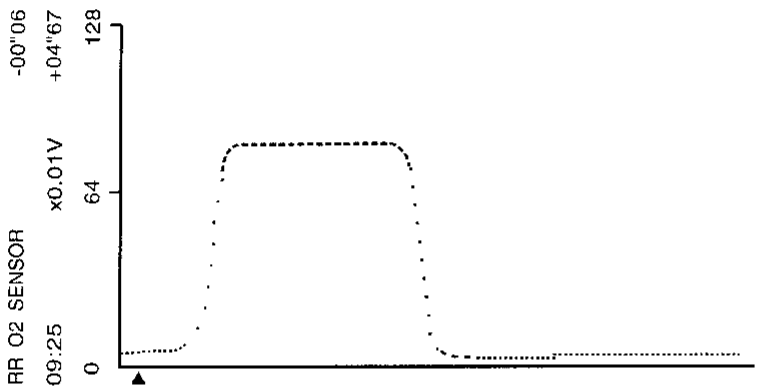

- "RR O2 SENSOR" may increase immediately after depressing the accelerator pedal and may decrease after releasing the pedal.

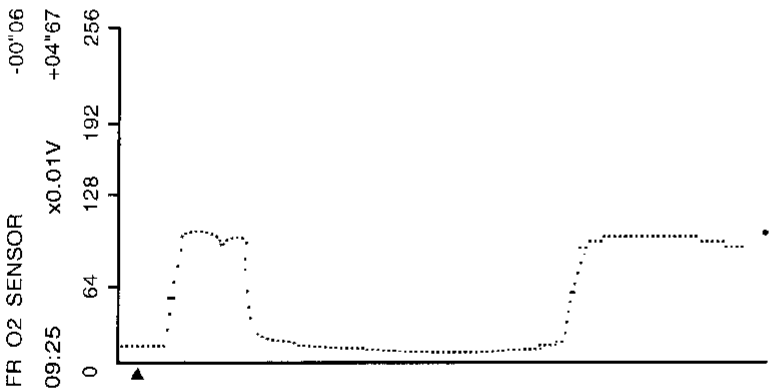

- "FR O2 SENSOR" may increase immediately after depressing the accelerator pedal and may decrease after releasing the pedal.

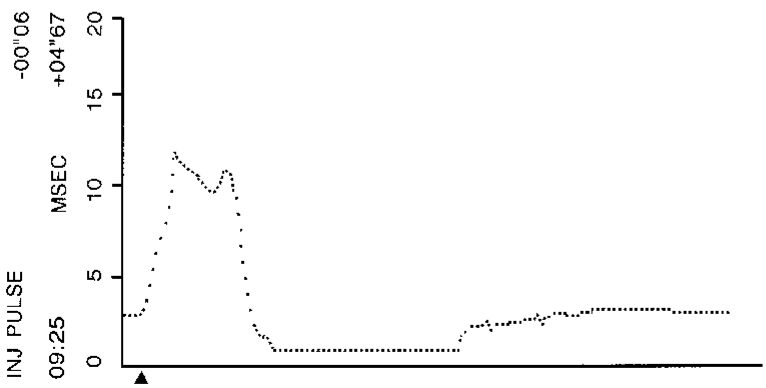

- "INJ PULSE" should increase when depressing the accelerator pedal and should decrease when the pedal is released.

SEF268S

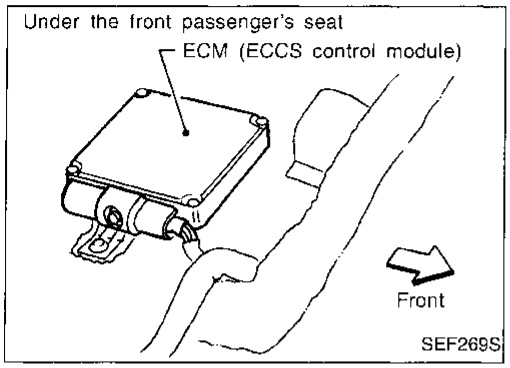

ECM Terminals and Reference Value

PREPARATION

1. ECM is located behind the front passenger seat side dash. For this inspection, remove the front passenger side dash.

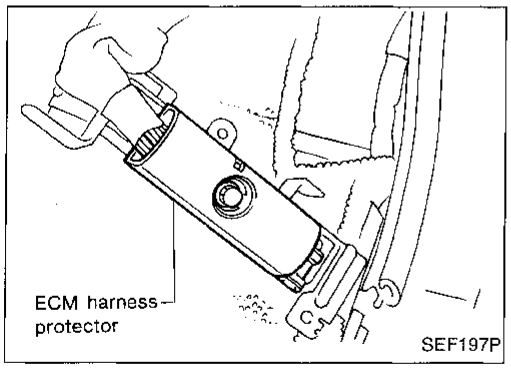

2. Remove ECM harness protector.

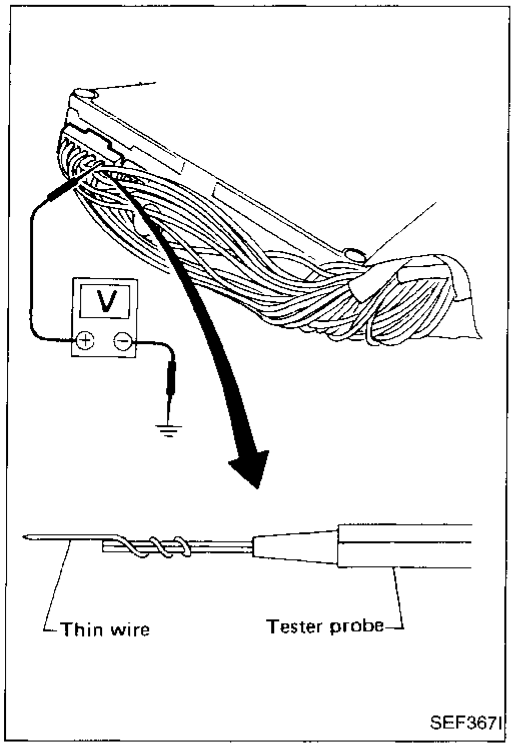

3. Perform all voltage measurements with the connectors connected. Extend tester probe as shown to perform tests easily.

ECM HARNESS CONNECTOR TERMINAL LAYOUT

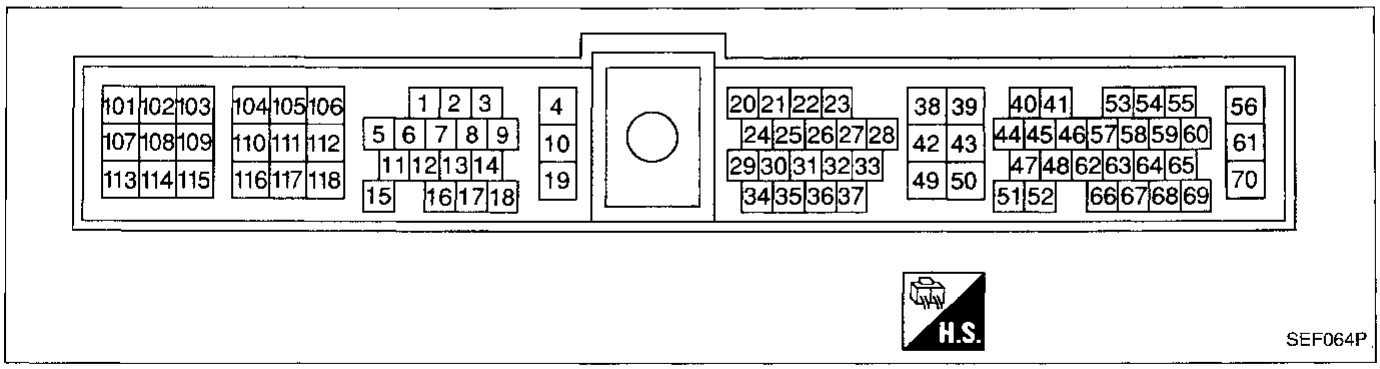

ECM INSPECTION TABLE

Specification data are reference values and are measured between each terminal and ㊸ (ECCS ground).

TERMINAL NO.	WIRE COLOR	ITEM	CONDITION	DATA (DC voltage)
1	W	Ignition signal	Engine is running. └ Idle speed	0.3 - 0.6V*
			Engine is running. └ Engine speed is 2,000 rpm	Approximately 0.8V*
2	W/G	Ignition check	Engine is running. └ Idle speed	Approximately 12V*
3	W	Tachometer	Engine is running. └ Idle speed	Approximately 0.9V*
4	L/R	ECCS relay (Self-shutoff)	Engine is running. Ignition switch "OFF" └ Less than 7 seconds after turning ignition switch "OFF".	0 - 1V
			Ignition switch "OFF" └ 7 seconds passed after turning ignition switch "OFF"	BATTERY VOLTAGE (11 - 14V)
5	R	EVAP canister purge volume control valve	Engine is running. └ Idle speed	0 - 0.4V or BATTERY VOLTAGE (11 - 14V)
6	L/G			
8	W/R	Fuel pump relay	Ignition switch "ON" └ For 5 seconds after turning ignition switch "ON" Engine is running.	Approximately 1V
			Ignition switch "ON" └ 5 seconds after turning ignition switch "ON"	BATTERY VOLTAGE (11 - 14V)
10	B/P	ECCS ground	Engine is running. └ Idle speed	Engine ground
15	G/R	Air conditioner relay	Engine is running. └ Both air conditioner switch and blower switch are "ON".	Approximately 1V
			Engine is running. └ Air conditioner switch is "OFF".	BATTERY VOLTAGE (11 - 14V)
16	G	EVAP canister purge volume control valve	Engine is running. └ Idle speed	0 - 0.4V or BATTERY VOLTAGE (11 - 14V)
17	Y			
18	R/W	Malfunction indicator lamp	Ignition switch "ON"	0 - 1V
			Engine is running. └ Idle speed	BATTERY VOLTAGE (11 - 14V)

*: Average voltage for pulse signal (Actual pulse signal can be confirmed by oscilloscope.)

ECM Terminals and Reference Value (Cont'd)

TERMINAL NO.	WIRE COLOR	ITEM	CONDITION	DATA (DC voltage)
19	B/P	ECCS ground	Engine is running. └ Idle speed	Engine ground
20	OR	Start signal	Ignition switch "ON"	Approximately 0V
			Ignition switch "START"	BATTERY VOLTAGE (11 - 14V)
21	G/R	Air conditioner switch	Engine is running. └ Both air conditioner switch and blower switch are "ON". (Compressor operates)	Approximately 0V
			Engine is running. └ Air conditioner switch is "OFF".	BATTERY VOLTAGE (11 - 14V)
22	L/B	Neutral position switch (M/T models) Inhibitor switch (A/T models)	Ignition switch "ON" ├ Gear position is "Neutral position" (M/T models) └ Gear position is "N" or "P" (A/T models)	Approximately 0V
			Ignition switch "ON" └ Except the above gear position	Approximately 5V
23	W	Throttle position sensor	Ignition switch "ON" └ Accelerator pedal released	0.3 - 0.7V
			Ignition switch "ON" └ Accelerator pedal fully depressed	Approximately 4V
25	G	Power steering oil pressure switch	Engine is running. └ Steering wheel is being turned.	0V
			Engine is running. └ Steering wheel is not being turned.	Approximately 5V
26	W/L	Vehicle speed sensor	Engine is running. └ Slowly rotating front wheels	Approximately 1.8 - 2.4V* (AC voltage)
27	Y	Throttle position switch (Closed position)	Ignition switch "ON" (Warm-up condition) └ Accelerator pedal released	BATTERY VOLTAGE (11 - 14V)
			Ignition switch "ON" └ Accelerator pedal depressed	Approximately 0V
28	Y/L	Intake air temperature sensor	Engine is running.	Approximately 0 - 4.8V Output voltage varies with intake air temperature.
32	R/Y	Swirl control valve control vacuum check switch	Engine is running. └ Engine speed is above 3,600 rpm.	0V
			Engine is running. └ Engine speed is less than 3,600 rpm.	Approximately 4.8V

*: Average voltage for pulse signal (Actual pulse signal can be confirmed by oscilloscope.)

ECM Terminals and Reference Value (Cont'd)

TERMINAL NO.	WIRE COLOR	ITEM	CONDITION	DATA (DC voltage)
38	B/W	Ignition switch	Ignition switch "OFF"	0V
			Ignition switch "ON"	BATTERY VOLTAGE (11 - 14V)
39	B	ECCS ground	Engine is running. └ Idle speed	Engine ground
40 44	GY R	Camshaft position sensor (Reference signal)	Engine is running.	Approximately 0.3V*
41	G	Camshaft position sensor (Position signal)	Engine is running.	Approximately 2.5V*
42	W	Front heated oxygen sensor heater	Engine is running. └ Engine speed is below 3,000 rpm.	Approximately 0V
			Engine is running. └ Engine speed is above 3,000 rpm.	BATTERY VOLTAGE (11 - 14V)
43	B	ECCS ground	Engine is running. └ Idle speed	Engine ground (Probe this terminal with ⊖ tester probe when measuring.)
46	W	Front heated oxygen sensor	Engine is running. └ After warming up sufficiently and engine speed is 2,000 rpm.	0 - Approximately 1.0V (periodically changes)
47	B	Mass air flow sensor	Engine is running. (Warm-up condition) └ Idle speed	1.3 - 1.7V
			Engine is running. (Warm-up condition) └ Engine speed is 2,500 rpm.	1.7 - 2.1V
48	W	Mass air flow sensor ground	Engine is running. (Warm-up condition) └ Idle speed	0.005 - 0.02V
49	P	Sensors' power supply	Ignition switch "ON"	Approximately 5V
50	B/G	Sensors' ground	Engine is running. (Warm-up condition) └ Idle speed	0.001 - 0.02V
51	LG/R	Engine coolant temperature sensor	Engine is running.	Approximately 0 - 4.8V Output voltage varies with engine coolant temperature.
52	W	Rear heated oxygen sensor	Engine is running. └ After warming up sufficiently and engine speed is 2,000 rpm.	0 - Approximately 1.0V
53	R	Crankshaft position sensor (OBD)	Engine is running. (A/T: N range, M/T: Neutral) └ Idle speed (Air conditioner switch "OFF".)	More than 0.2V* (AC range)
56 61	G/R G/R	Power supply for ECM	Ignition switch "ON"	BATTERY VOLTAGE (11 - 14V)

*: Average voltage for pulse signal (Actual pulse signal can be confirmed by oscilloscope.)

ECM Terminals and Reference Value (Cont'd)

TERMINAL NO.	WIRE COLOR	ITEM	CONDITION	DATA (DC voltage)
57	L	Absolute pressure sensor	Ignition switch "ON" └ Engine is not running	Approximately 4.4V
			Engine is running. └ Idle speed (More than 5 seconds after starting engine)	Approximately 1.2V
58	R	Data link connector for GST	Engine is running. └ Idle speed (GST is disconnected.)	Approximately 9V
62	G/OR	EGR temperature sensor	Engine is running. (Warm-up condition) └ Idle speed	Less than 4.5V
			Engine is running. (Warm-up condition) └ EGR system is operating.	0 - 3.0V
63	L	Tank fuel temperature sensor	Engine is running.	Approximately 0 - 4.8V Output voltage varies with fuel temperature.
64	Y	Data link connector for CONSULT	Engine is running. └ Idle speed (Connect CONSULT and select DATA MONITOR mode.)	Approximately 0.1V
65	R			Approximately 4 - 9V
68	G			Approximately 3.5V*
67	L	EVAP control system pressure sensor	Ignition switch "ON"	Approximately 3.4V
70	R/G	Power supply (Back-up)	Ignition switch "OFF"	BATTERY VOLTAGE (11 - 14V)
101	W/G	IACV-AAC valve	Ignition switch "ON".	BATTERY VOLTAGE (11 - 14V)
			Engine is running. (Warm-up condition) └ Engine speed is 2,000 rpm	0 - 7V
102	W/B	Injector No. 1	Engine is running.	BATTERY VOLTAGE (11 - 14V)
104	W/R	Injector No. 3		
107	W/L	Injector No. 2		
109	W/G	Injector No. 4		
103	W/L	EGRC-solenoid valve	Engine is running. (Warm-up condition) └ Engine speed is 2,000 rpm.	BATTERY VOLTAGE (11 - 14V)
			Engine is running. (Warm-up condition) └ Idle speed	0 - 1V
105	W/R	EVAP canister purge control solenoid valve	Engine is running. └ Idle speed	BATTERY VOLTAGE (11 - 14V)
106	B/P	ECCS ground	Engine is running. └ Idle speed	Engine ground

*: Average voltage for pulse signal (Actual pulse signal can be confirmed by oscilloscope.)

ECM Terminals and Reference Value (Cont'd)

TERMINAL NO.	WIRE COLOR	ITEM	CONDITION	DATA (DC voltage)
108	R	EVAP canister vent control valve	Ignition switch "ON"	BATTERY VOLTAGE (11 - 14V)
110	B	ECCS case ground	Engine is running. └ Idle speed	Approximately 0V
111	GY	Swirl control valve control solenoid valve	Engine is running. └ Idle speed	0 - 1V
			Engine is running. └ Engine speed is above 3,600 rpm.	BATTERY VOLTAGE (11 - 14V)
112	B/P	ECCS ground	Engine is running. └ Idle speed	Engine ground
113	G/R	Current return	Engine is running. └ Idle speed	BATTERY VOLTAGE (11 - 14V)
114	L/Y	Torque converter clutch solenoid valve	Engine is running. ├ Idle speed └ Engine coolant temperature is below 40°C (104°F)	Approximately 0V
			Engine is running. ├ After warming up ├ Engine coolant temperature is above 40°C (104°F) └ Engine speed is 2,000 rpm	BATTERY VOLTAGE (11 - 14V)
115	R	Rear heated oxygen sensor heater	Engine is running. └ Engine speed is below 6,000 rpm.	Approximately 0V
			Ignition switch "ON" └ Engine is stopped.	BATTERY VOLTAGE (11 - 14V)
116	W/R	MAP/BARO switch solenoid valve	Ignition switch "ON"	0 - 1V
			Engine is running. └ Idle speed (More than 5 seconds after starting engine)	BATTERY VOLTAGE (11 - 14V)
117	Y	Vacuum cut valve bypass valve	Ignition switch "ON"	BATTERY VOLTAGE (11 - 14V)
118	B/P	ECCS ground	Engine is running. └ Idle speed	Engine ground

*: Average voltage for pulse signal (Actual pulse signal can be confirmed by oscilloscope.)

Main Power Supply and Ground Circuit

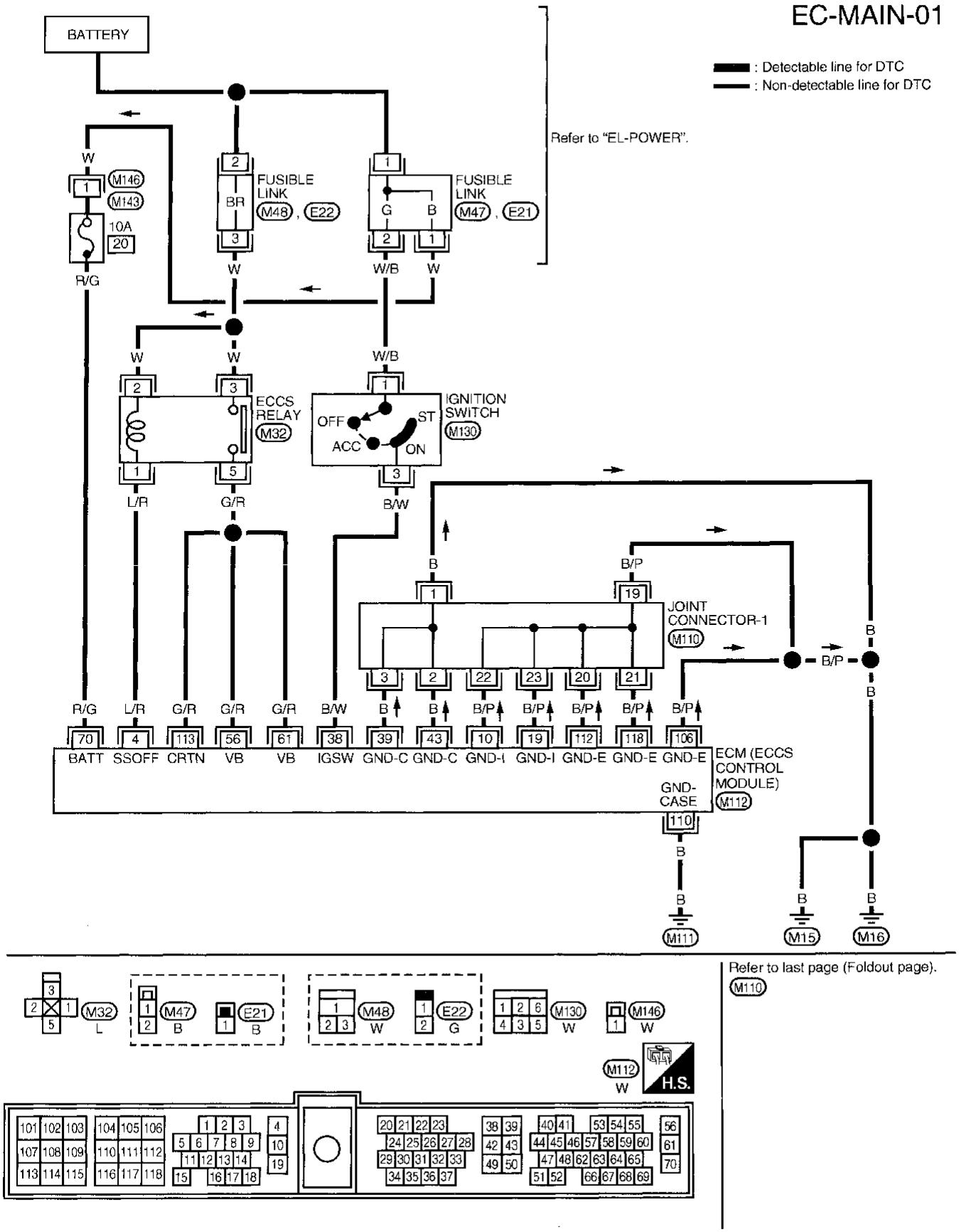

AEC038A

Main Power Supply and Ground Circuit (Cont'd)

ECM TERMINALS AND REFERENCE VALUE

Specification data are reference values and are measured between each terminal and ㊸ (ECCS ground).

TERMINAL NO.	WIRE COLOR	ITEM	CONDITION	DATA (DC voltage)
4	L/R	ECCS relay (Self-shutoff)	Engine is running. Ignition switch "OFF" └ Less than 7 seconds after turning ignition switch "OFF".	0 - 1V
			Ignition switch "OFF" └ 7 seconds passed after turning ignition switch "OFF"	BATTERY VOLTAGE (11 - 14V)
10	B/P	ECCS ground	Engine is running. └ Idle speed	Engine ground
19	B/P	ECCS ground	Engine is running. └ Idle speed	Engine ground
38	B/W	Ignition switch	Ignition switch "OFF"	0V
			Ignition switch "ON"	BATTERY VOLTAGE (11 - 14V)
39	B	ECCS ground	Engine is running. └ Idle speed	Engine ground
43	B	ECCS ground	Engine is running. └ Idle speed	Engine ground (Probe this terminal with ⊖ tester probe when measuring.)
56 61	G/R G/R	Power supply for ECM	Ignition switch "ON"	BATTERY VOLTAGE (11 - 14V)
70	R/G	Power supply (Back-up)	Ignition switch "OFF"	BATTERY VOLTAGE (11 - 14V)
106	B/P	ECCS ground	Engine is running. └ Idle speed	Engine ground
110	B	ECCS case ground	Engine is running. └ Idle speed	Approximately 0V
112	B/P	ECCS ground	Engine is running. └ Idle speed	Engine ground
113	G/R	Current return	Engine is running. └ Idle speed	BATTERY VOLTAGE (11 - 14V)
118	B/P	ECCS ground	Engine is running. └ Idle speed	Engine ground

Main Power Supply and Ground Circuit (Cont'd)

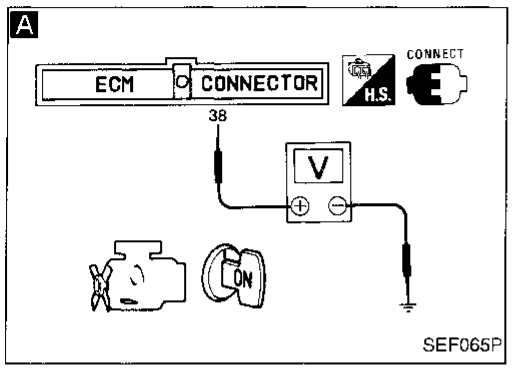

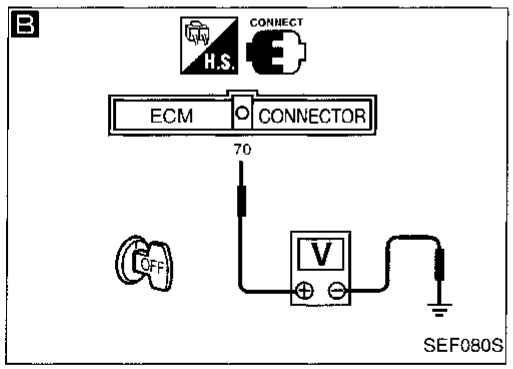

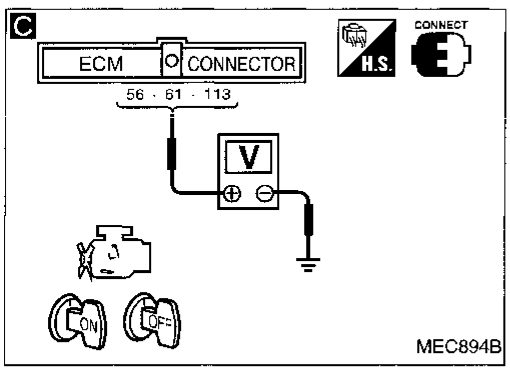

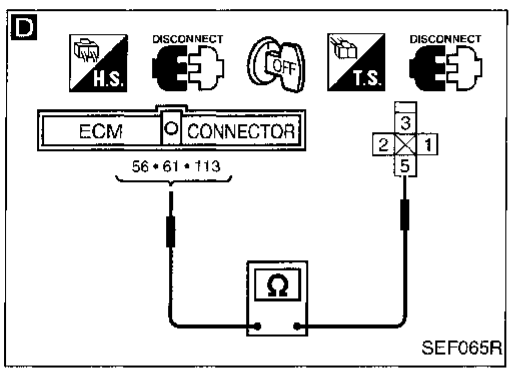

INSPECTION START

Start engine.
Is engine running?

No → **A**

CHECK POWER SUPPLY-I.
1. Turn ignition switch "ON".
2. Check voltage between ECM terminal (38) and ground with CONSULT or tester.
   Voltage: Battery voltage

If NG, check the following.
- Harness for open or short between ECM and ignition switch

If NG, repair harness or connectors.

OK → Go to "CHECK GROUND CIRCUIT" on next page.

Yes

B

CHECK POWER SUPPLY-II.
1. Stop engine.
2. Check voltage between ECM terminal (70) and ground with CONSULT or tester.
   Voltage: Battery voltage

NG →
Check the following.
- 10A fuse
- Harness connectors (M143), (M146)
- Fusible link
- Harness for open or short between ECM and battery

If NG, repair harness or connectors.

OK

C

CHECK POWER SUPPLY-III.
1. Turn ignition switch "ON" and then "OFF".
2. Check voltage between ECM terminals (56), (61), (113) and ground with CONSULT or tester.
   Voltage:
   After turning ignition switch "OFF", battery voltage will exist for a few seconds, then drop to approximately 0V.

OK → Go to "CHECK GROUND CIRCUIT" on next page.

Case-1: Battery voltage does not exist for a few seconds.
Case-2: Battery voltage exists for more than a few seconds.

NG

Case-2 → Go to "CHECK ECCS RELAY" on next page.

Case-1 → Ⓐ (Go to next page.)

Main Power Supply and Ground Circuit (Cont'd)

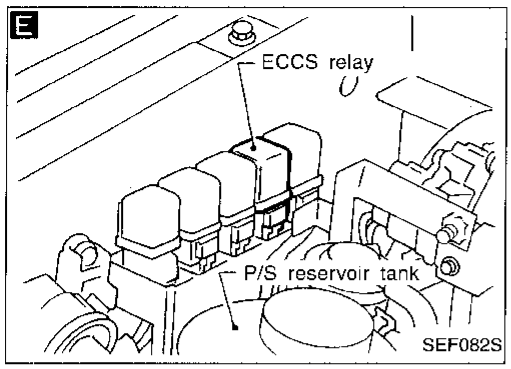

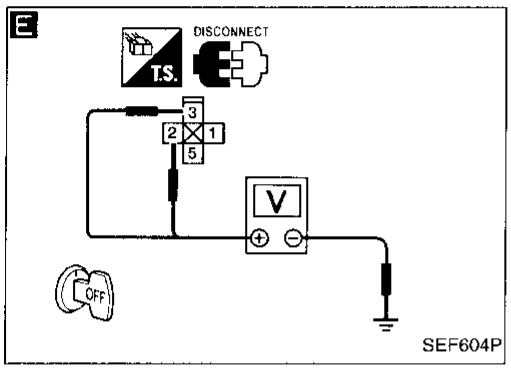

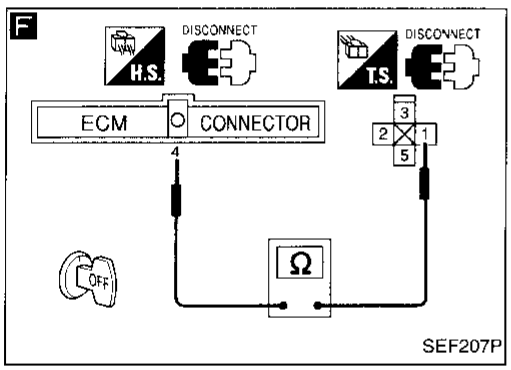

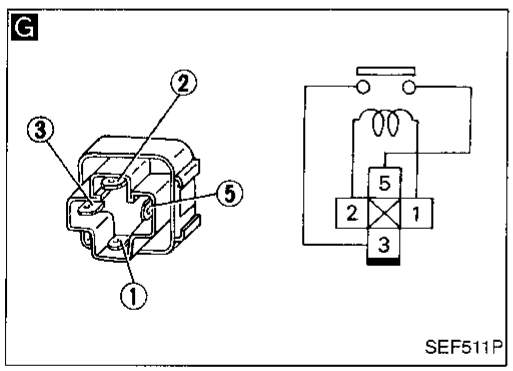

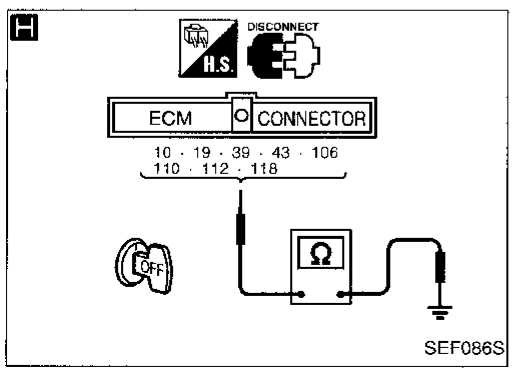

Ⓐ

D

CHECK HARNESS CONTINUITY BETWEEN ECCS RELAY AND ECM.
1. Disconnect ECM harness connector.
2. Disconnect ECCS relay.
3. Check harness continuity between ECM terminals (56), (61), (113) and terminal (5).

Continuity should exist.
If OK, check harness for short.

NG → Repair harness or connectors.

OK ↓

E

CHECK VOLTAGE BETWEEN ECCS RELAY AND GROUND.
Check voltage between terminals (2), (3) and ground with CONSULT or tester.
Voltage: Battery voltage

NG → Check the following.
- Fusible link (Brown)
- Harness for open or short between ECCS relay and battery

If NG, repair harness or connectors.

OK ↓

F

CHECK OUTPUT SIGNAL CIRCUIT.
Check harness continuity between ECM terminal (4) and terminal (1).
Continuity should exist.
If OK, check harness for short.

NG → Repair harness or connectors.

OK ↓

G

CHECK ECCS RELAY.
1. Apply 12V direct current between relay terminals (1) and (2).
2. Check continuity between relay terminals (3) and (5).

12V ((1) - (2)) applied:
Continuity exists.
No voltage applied:
No continuity.

NG → Replace ECCS relay.

OK ↓

H

CHECK GROUND CIRCUIT.
1. Turn ignition switch "OFF".
2. Disconnect ECM harness connector.
3. Check harness continuity between ECM terminals (10), (19), (39), (43), (106), (110), (112), (118) and engine ground.

Continuity should exist.
If OK, check harness for short.

NG → Check the following.
- Joint connector-1
- Harness for open or short between ECM and ground

If NG, repair harness or connectors.

OK ↓

Check ECM pin terminals for damage and check the connection of ECM harness connector.

↓

INSPECTION END

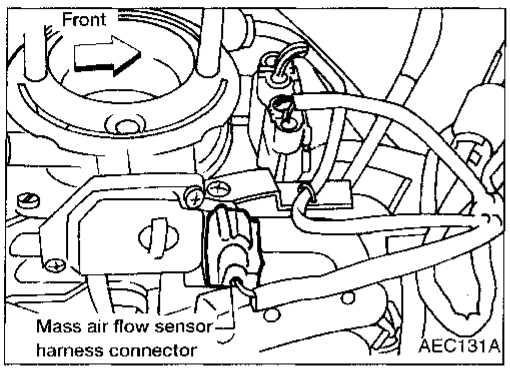

Mass Air Flow Sensor (MAFS)

COMPONENT DESCRIPTION

The mass air flow sensor is placed in the stream of intake air. It measures the intake flow rate by measuring a part of the entire intake flow. It consists of a hot wire that is supplied with electric current from the ECM. The temperature of the hot wire is controlled by the ECM a certain amount. The heat generated by the hot wire is reduced as the intake air flows around it. The more air, the greater the heat loss.
Therefore, the ECM must supply more electric current to the hot wire as air flow increases. This maintains the temperature of the hot wire. The ECM detects the air flow by means of this current change.

ECM TERMINALS AND REFERENCE VALUE

Specification data are reference values and are measured between each terminal and 43 (ECCS ground).

TERMINAL NO.	WIRE COLOR	ITEM	CONDITION	DATA (DC voltage)
47	B	Mass air flow sensor	Engine is running. (Warm-up condition) — Idle speed	1.3 - 1.7V
			Engine is running. (Warm-up condition) — Engine speed is 2,500 rpm.	1.7 - 2.1V
48	W	Mass air flow sensor ground	Engine is running. (Warm-up condition) — Idle speed	0.005 - 0.02V

CONSULT REFERENCE VALUE IN DATA MONITOR MODE

Specification data are reference values.

MONITOR ITEM	CONDITION		SPECIFICATION
MAS AIR/FL SE	• Engine: After warming up • Air conditioner switch OFF • Shift lever "N" • No-load	Idle	1.3 - 1.7V
		2,500 rpm	1.7 - 2.1V
CAL/LD VALUE	• Engine: After warming up • Air conditioner switch: OFF • Shift lever "N" • No-load	Idle	16.8 - 34.7% (2WD models) 15.9 - 33.2% (4WD models)
		2,500 rpm	14.1 - 27.6 % (2WD models) 13.3 - 26.1 % (4WD models)
MASS AIRFLOW	• Engine: After warming up • Air conditioner switch: OFF • Shift lever "N" • No-load	Idle	1.8 - 6.5 g·m/s (2WD models) 2.1 - 6.0 g·m/s (4WD models)
		2,500 rpm	7.7- 15.0 g·m/s (2WD models) 6.8 - 13.3 g·m/s (4WD models)

ON BOARD DIAGNOSIS LOGIC

Diagnostic Trouble Code No.	Malfunction is detected when ...	Check Item (Possible Cause)
P0100 0102	A) An excessively high or low voltage from the sensor is sent to ECM.* B)C) Rationally incorrect voltage is sent to ECM, compared with the calculated value by camshaft position sensor signal and throttle position sensor signal.	● Harness or connectors (The sensor circuit is open or shorted.) ● Mass air flow sensor

*: When this malfunction is detected, the ECM enters fail-safe mode and the MIL lights up. (Refer to EC-76.)

Engine operating condition in fail-safe mode
Engine speed will not rise more than 2,400 rpm due to the fuel cut.

Mass Air Flow Sensor (MAFS) (Cont'd)

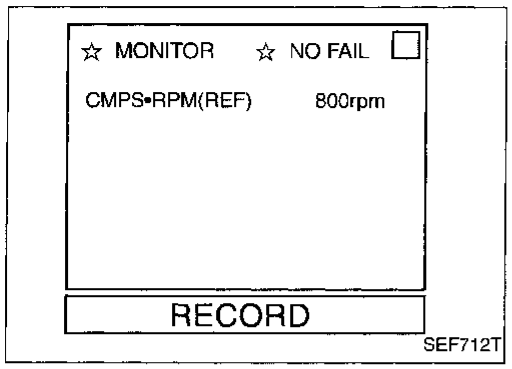

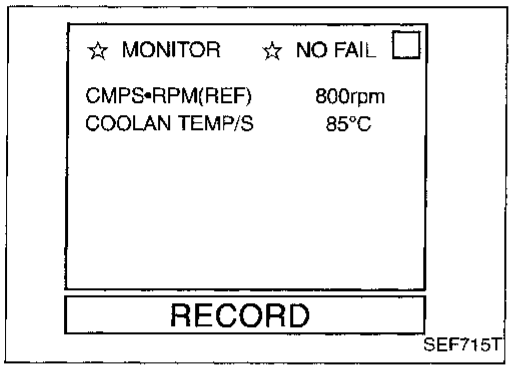

DIAGNOSTIC TROUBLE CODE CONFIRMATION PROCEDURE

Perform "Procedure for malfunction A" first. If the 1st trip DTC cannot be confirmed, perform "Procedure for malfunction B". If there is no problem on "Procedure for malfunction B", perform "Procedure for malfunction C", "OVERALL FUNCTION CHECK".

Procedure for malfunction A

1) Turn ignition switch "ON" and wait at least 6 seconds.
2) Select "DATA MONITOR" mode with CONSULT.
3) Start engine and wait at least 3 seconds.

OR

1) Turn ignition switch "ON" and wait at least 6 seconds.
2) Start engine and wait at least 3 seconds.
3) Select "MODE 7" with GST.

OR

1) Turn ignition switch "ON" and wait at least 6 seconds.
2) Start engine and wait at least 3 seconds.
3) Turn ignition switch "OFF", wait at least 7 seconds and then turn "ON".
4) Perform "Diagnostic Test Mode II (Self-diagnostic results)" with ECM.

Procedure for malfunction B

1) Turn ignition switch "ON".
2) Select "DATA MONITOR" mode with CONSULT.
3) Start engine and warm it up sufficiently.
4) Run engine for at least 10 seconds at idle speed.

OR

1) Turn ignition switch "ON".
2) Start engine and warm it up sufficiently.
3) Run engine for at least 10 seconds at idle speed.
4) Select "MODE 7" with GST.

OR

1) Turn ignition switch "ON".
2) Start engine and warm it up sufficiently.
3) Run engine for at least 10 seconds at idle speed.
4) Turn ignition switch "OFF", wait at least 7 seconds and then turn "ON".
5) Perform "Diagnostic Test Mode II (Self-diagnostic results)" with ECM.

Mass Air Flow Sensor (MAFS) (Cont'd)

OVERALL FUNCTION CHECK

Use this procedure to check the overall function of mass air flow sensor. During this check a 1st trip DTC might not be confirmed.

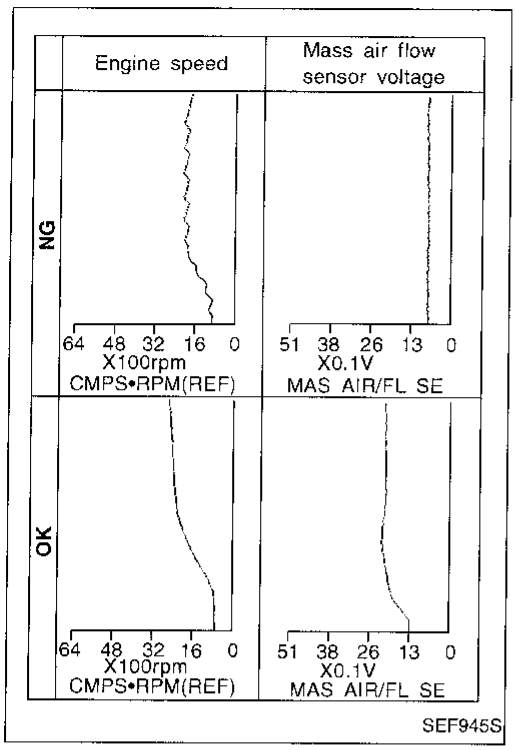

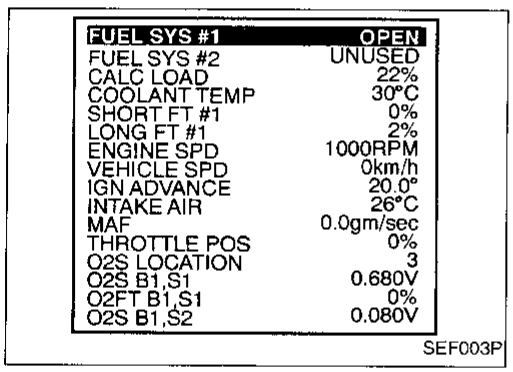

FUEL SYS #1	OPEN
FUEL SYS #2	UNUSED
CALC LOAD	22%
COOLANT TEMP	30°C
SHORT FT #1	0%
LONG FT #1	2%
ENGINE SPD	1000RPM
VEHICLE SPD	0km/h
IGN ADVANCE	20.0°
INTAKE AIR	26°C
MAF	0.0gm/sec
THROTTLE POS	0%
O2S LOCATION	3
O2S B1,S1	0.680V
O2FT B1,S1	0%
O2S B1,S2	0.080V

SEF003P

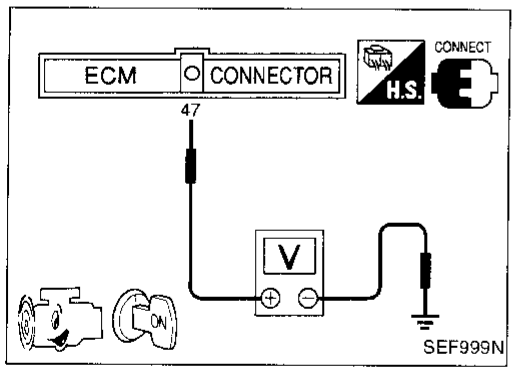

Procedure for malfunction C

1) Turn ignition switch "ON".
2) Start engine and warm it up sufficiently.
3) Select "DATA MONITOR" mode with CONSULT.
4) Check the voltage of mass air flow sensor with "DATA MONITOR".
5) Check for linear voltage rise in response to increases to about 4,000 rpm in engine speed.

OR

1) Turn ignition switch "ON".
2) Start engine and warm it up sufficiently.
3) Select "MODE 1" with GST.
4) Check the mass air flow with "MODE 1".
5) Check for linear mass air flow rise in response to increases to about 4,000 rpm in engine speed.

OR

1) Turn ignition switch "ON".
2) Start engine and warm it up sufficiently.
3) Check the voltage between ECM terminal (47) and ground.
4) Check for linear voltage rise in response to increases to about 4,000 rpm in engine speed.

EC-MAFS-01

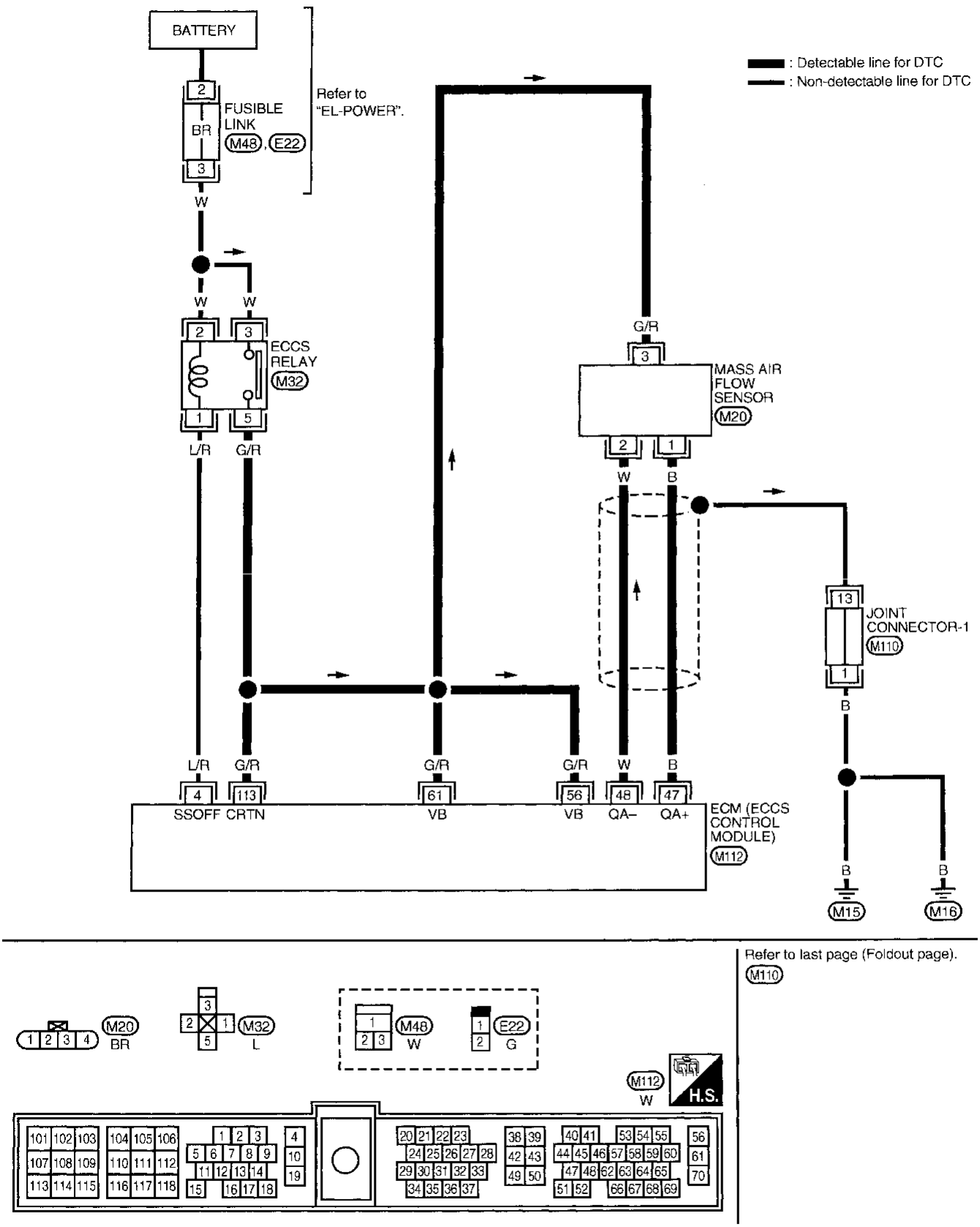

AEC039A

Mass Air Flow Sensor (MAFS) (Cont'd)

DIAGNOSTIC PROCEDURE

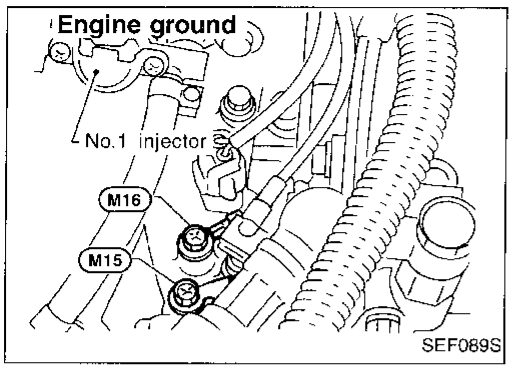

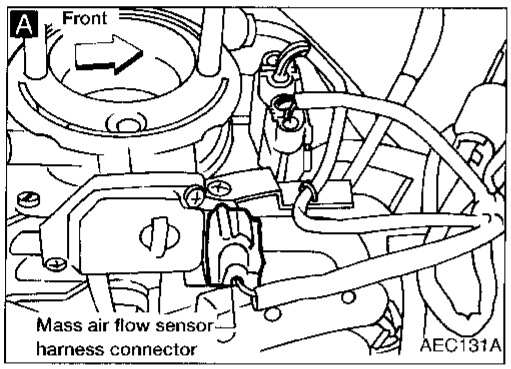

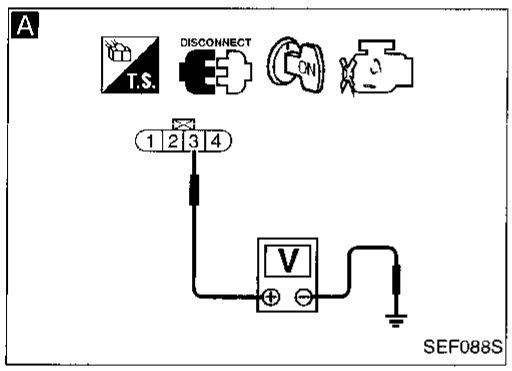

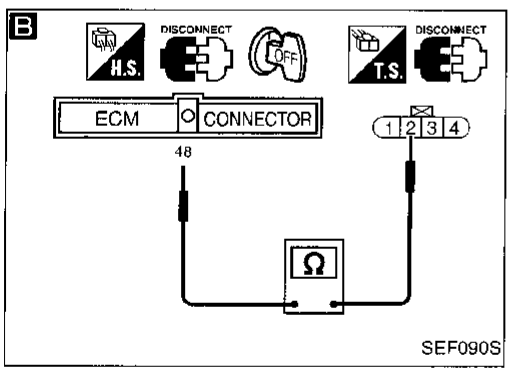

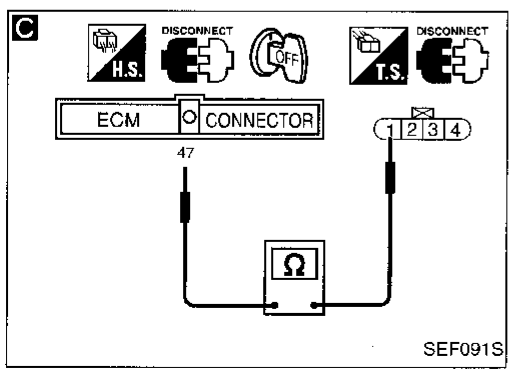

INSPECTION START

CHECK SHIELD CIRCUIT.
1. Turn ignition switch "OFF".
2. Loosen and retighten engine ground screws.
3. Remove joint connector-1.
4. Check the following.
   - Continuity between joint connector-1 terminal ① and ground
   - Joint connector-1
     (Refer to "HARNESS LAYOUT" in EL section.)

Continuity should exist.
If OK, check harness for short. Then reconnect joint connector-1.

NG → Repair harness or connectors.

OK ↓

A

CHECK POWER SUPPLY.
1. Disconnect mass air flow sensor harness connector.
2. Turn ignition switch "ON".
3. Check voltage between terminal ③ and ground with CONSULT or tester.

Voltage: Battery voltage

NG → Check the following.
- Harness for open or short between mass air flow sensor and ECM
- Harness for open or short between mass air flow sensor and ECCS relay

If NG, repair harness or connectors.

OK ↓

B

CHECK GROUND CIRCUIT.
1. Turn ignition switch "OFF".
2. Disconnect ECM harness connector.
3. Check harness continuity between terminal ② and ECM terminal ㊽.

Continuity should exist.
If OK, check harness for short.

NG → Repair harness or connectors.

OK ↓

C

CHECK INPUT SIGNAL CIRCUIT.
Check harness continuity between terminal ① and ECM terminal ㊼.
Continuity should exist.
If OK, check harness for short.

NG → Repair harness or connectors.

OK ↓

CHECK COMPONENT
(Mass air flow sensor).
Refer to "COMPONENT INSPECTION" on next page.

NG → Replace mass air flow sensor.

OK ↓

Disconnect and reconnect harness connectors in the circuits. Then retest.

Trouble is not fixed. ↓

Check ECM pin terminals for damage and check the connection of ECM harness connector. Reconnect ECM harness connector and retest.

↓

INSPECTION END

Mass Air Flow Sensor (MAFS) (Cont'd)

COMPONENT INSPECTION

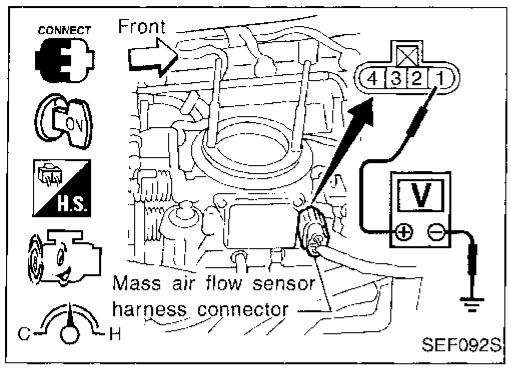

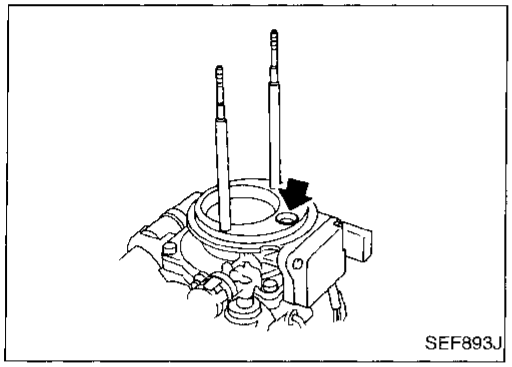

Mass air flow sensor

1. Turn ignition switch "ON".
2. Start engine and warm it up sufficiently.
3. Check voltage between terminal ① and ground.

Conditions	Voltage V
Ignition switch "ON" (Engine stopped.)	Less than 1.0
Idle (Engine is warmed-up sufficiently.)	1.3 - 1.7
2,500 rpm	1.7 - 2.3
Idle to about 4,000 rpm*	1.3 - 1.7 to Approx. 4.0

*: Check for linear voltage rise in response to increases to about 4,000 rpm in engine speed.

4. If NG, remove mass air flow sensor from air duct. Check hot wire for damage or dust.

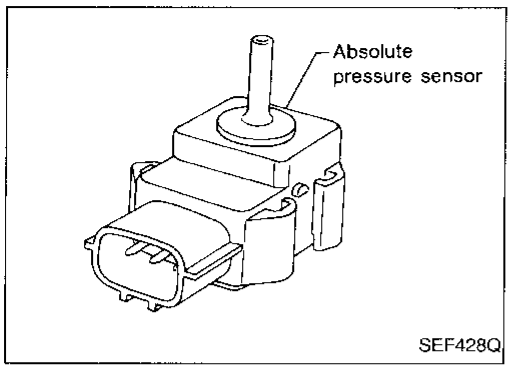

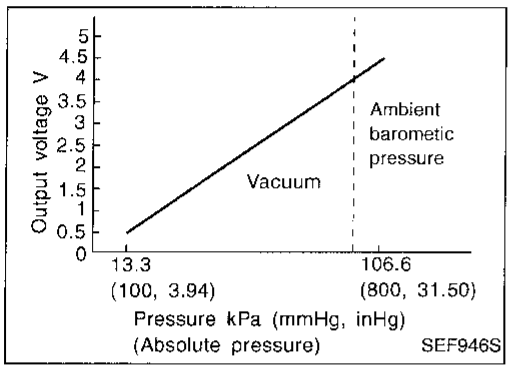

Absolute Pressure Sensor

COMPONENT DESCRIPTION

The absolute pressure sensor is connected to the MAP/BARO switch solenoid valve by a hose. The sensor detects ambient barometric pressure and intake manifold pressure and sends the voltage signal to the ECM. As the pressure increases, the voltage rises. The absolute pressure sensor is not used to control the engine system. It is used only for on board diagnosis.

ECM TERMINALS AND REFERENCE VALUE

Specification data are reference values and are measured between each terminal and ㊸ (ECCS ground).

TERMINAL NO.	WIRE COLOR	ITEM	CONDITION	DATA (DC voltage)
49	P	Sensors' power supply	Ignition switch "ON"	Approximately 5V
50	B/G	Sensors' ground	Engine is running. (Warm-up condition) └ Idle speed	0.001 - 0.02V
57	L	Absolute pressure sensor	Ignition switch "ON" └ Engine is not running	Approximately 4.4V
			Engine is running. └ Idle speed (More than 5 seconds after starting engine)	Approximately 1.2V

CONSULT REFERENCE VALUE IN DATA MONITOR MODE

Specification data are reference values.

MONITOR ITEM	CONDITION		SPECIFICATION
ABSOL PRES/SE	● Engine: After warming up	Engine is not running	Approx. 4.4V
		Idle (More than 5 seconds after starting engine)	Approx. 1.2V

ON BOARD DIAGNOSIS LOGIC

Diagnostic Trouble Code No.	Malfunction is detected when	Check Items (Possible Cause)
P0105 0803	A) An excessively low or high voltage from the sensor is sent to ECM.	● Harness or connectors (Absolute pressure sensor circuit is open or shorted.) ● Absolute pressure sensor
	B) A low voltage from the sensor is sent to ECM under heavy load driving conditions.	● Absolute pressure sensor
	C) A high voltage from the sensor is sent to ECM under light load driving conditions.	● Hoses (Hoses between the intake manifold and absolute pressure sensor are disconnected or clogged.) ● Intake air leaks ● Absolute pressure sensor

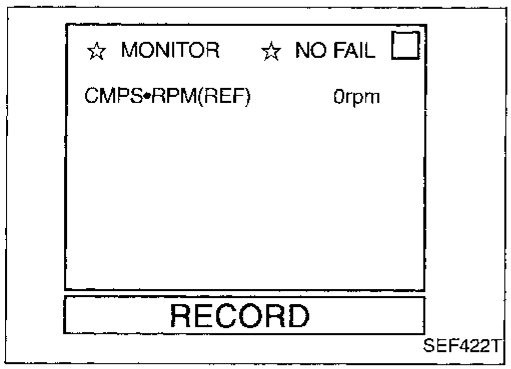

DIAGNOSTIC TROUBLE CODE CONFIRMATION PROCEDURE

Perform "Procedure for malfunction A" first. If the 1st trip DTC cannot be confirmed, perform "Procedure for malfunction B", "OVERALL FUNCTION CHECK". If there is no problem on "Procedure for malfunction B", perform "Procedure for malfunction C".

Procedure for malfunction A

1) Turn ignition switch "ON".
2) Select "DATA MONITOR" mode with CONSULT.
3) Wait at least 6 seconds.

OR

1) Turn ignition switch "ON" and wait at least 6 seconds.
2) Select "MODE 7" with GST.

OR

1) Turn ignition switch "ON" and wait at least 6 seconds.
2) Turn ignition switch "OFF" and wait at least 7 seconds.
3) Perform "Diagnostic Test Mode II (Self-diagnostic results)" with ECM.

If the 1st trip DTC cannot be confirmed, perform "Procedure for malfunction B", "OVERALL FUNCTION CHECK" on next page.

Absolute Pressure Sensor (Cont'd)

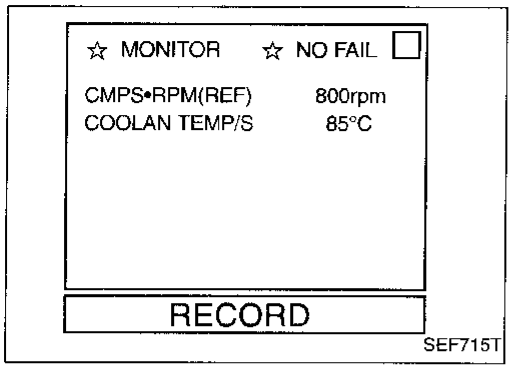

Procedure for malfunction C

1) Start engine and warm it up sufficiently.
2) Turn ignition switch "OFF" and wait at least 7 seconds.
3) Turn ignition switch "ON" and select "DATA MONITOR" mode with CONSULT.
4) Start engine and let it idle.
5) Wait at least 20 seconds.

OR

1) Start engine and warm it up sufficiently.
2) Turn ignition switch "OFF" and wait at least 7 seconds.
3) Start engine.
4) Let engine idle and wait at least 20 seconds.
5) Select "MODE 7" with GST.

OR

1) Start engine and warm it up sufficiently.
2) Turn ignition switch "OFF" and wait at least 7 seconds.
3) Start engine.
4) Let engine idle and wait at least 20 seconds.
5) Turn ignition switch "OFF".
6) Perform "Diagnostic Test Mode II (Self-diagnostic results)" with ECM.

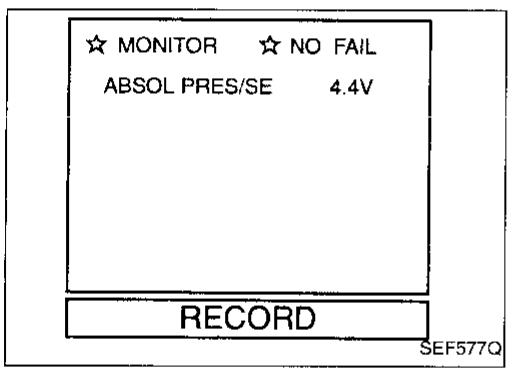

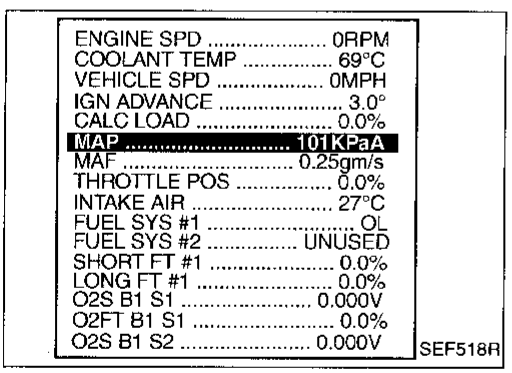

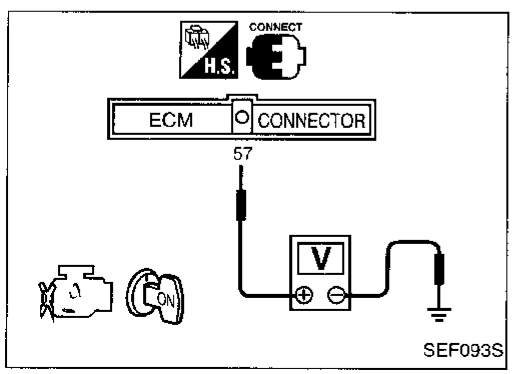

OVERALL FUNCTION CHECK

Use this procedure to check the overall function of absolute pressure sensor circuit. During this check, a 1st trip DTC might not be confirmed.

Procedure for malfunction B

1) Turn ignition switch "ON".
2) Select "ABSOL PRES/SE" in "DATA MONITOR" mode with CONSULT.
3) Make sure that the voltage of "ABSOL PRES/SE" is more than 1.74 [V].

OR

1) Turn ignition switch "ON".
2) Select "MAP" in "MODE 1" with GST.
3) Make sure that the pressure of "MAP" is more than 46 kPa (0.47 kg/cm^2, 6.7 psi).

OR

1) Turn ignition switch "ON".
2) Make sure that the voltage between ECM terminal ⑤⑦ and ground is more than 1.74 [V].

If the 1st trip DTC cannot be confirmed, perform "Procedure for malfunction C" above.

EC-AP/SEN-01

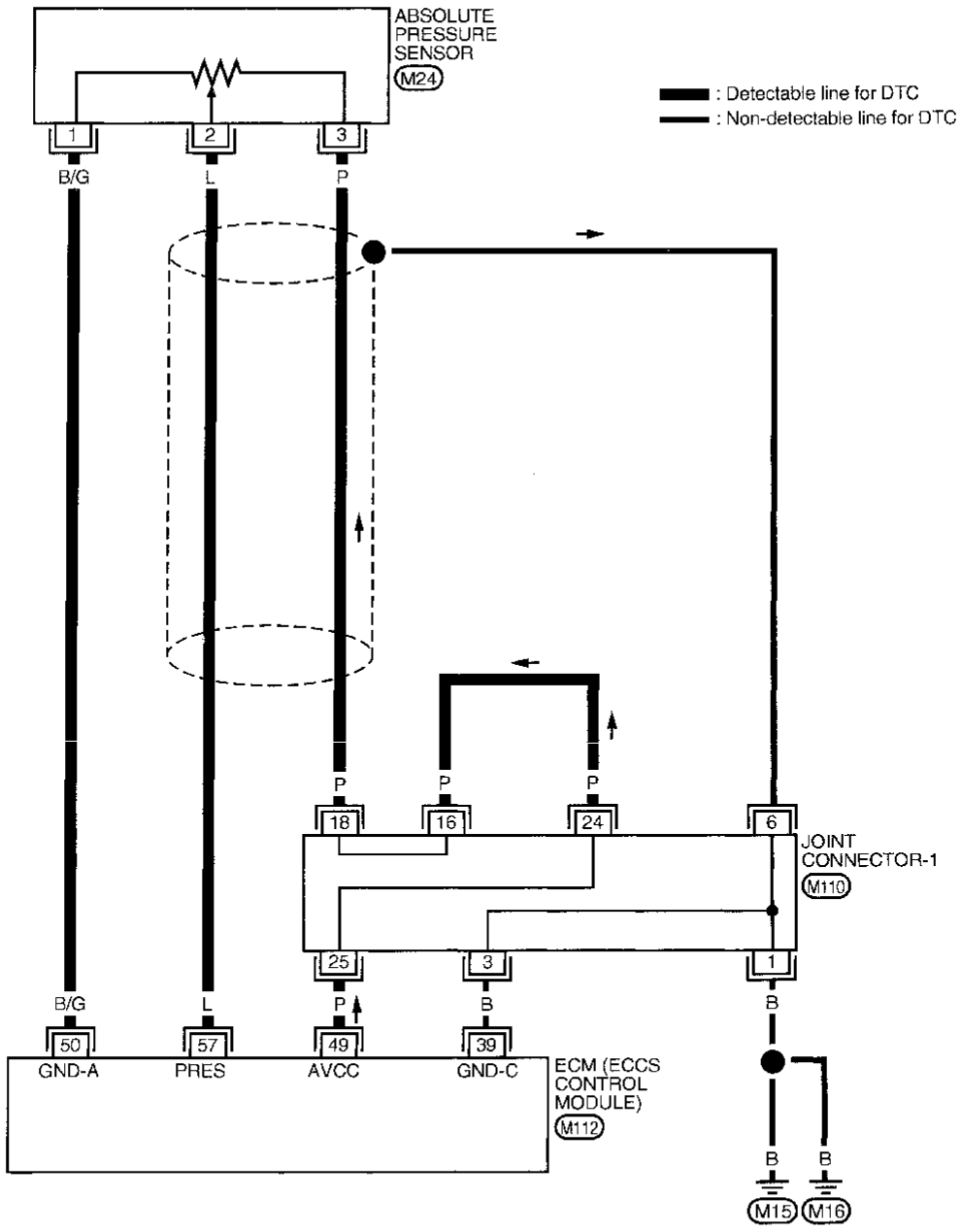

Refer to last page (Foldout page).
M110

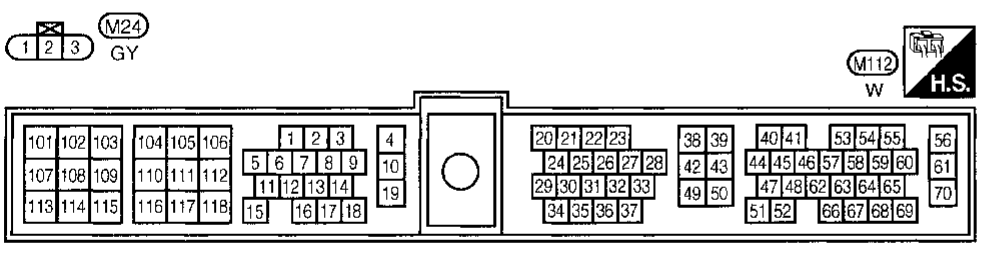

AEC040A

Absolute Pressure Sensor (Cont'd)

DIAGNOSTIC PROCEDURE

If the trouble is duplicated after "Procedure for malfunction A or B", perform "Procedure A" below. If the trouble is duplicated after "Procedure for malfunction C", perform "Procedure B" on next page.

Procedure A

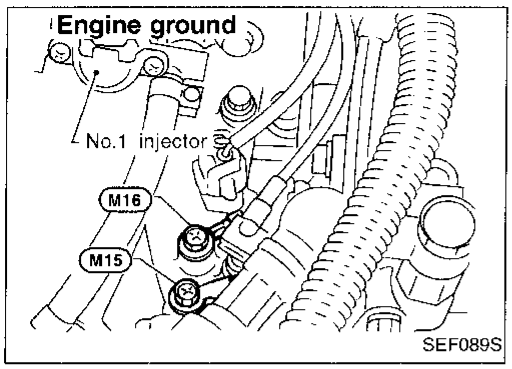

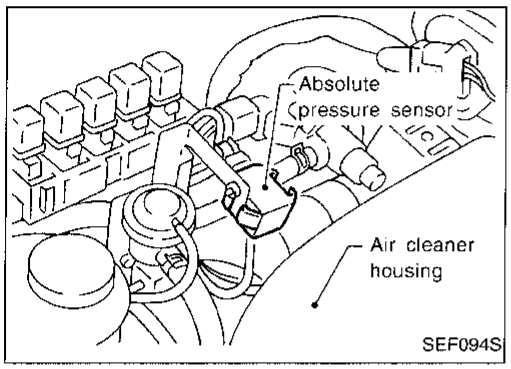

INSPECTION START

↓

CHECK SHIELD CIRCUIT.
1. Turn ignition switch "OFF".
2. Loosen and retighten engine ground screws.
3. Remove joint connector-1.
4. Check the following.
   - Continuity between joint connector-1 terminal ① and ground
   - Joint connector-1 (Refer to "HARNESS LAYOUT" in EL section.)

   Continuity should exist.
   If OK, check harness for short. Then reconnect joint connector-1.

NG → Repair harness or connectors.

OK ↓

A

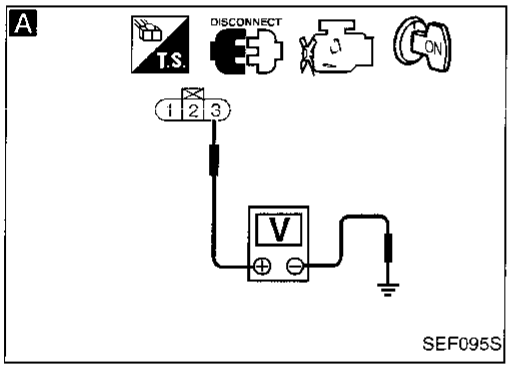

CHECK POWER SUPPLY.
1. Disconnect absolute pressure sensor harness connector.
2. Turn ignition switch "ON".
3. Check voltage between terminal ③ and engine ground with CONSULT or tester.

   Voltage: Approximately 5V

NG → Check the following.
- Joint connector-1
- Harness for open or short between absolute pressure sensor and ECM

If NG, repair harness or connectors.

OK ↓

B

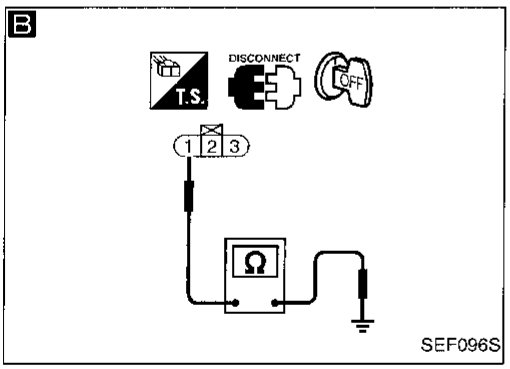

CHECK GROUND CIRCUIT.
1. Turn ignition switch "OFF".
2. Check harness continuity between terminal ① and engine ground.

   Continuity should exist.
   If OK, check harness for short.

NG → Repair harness or connectors.

OK ↓

C

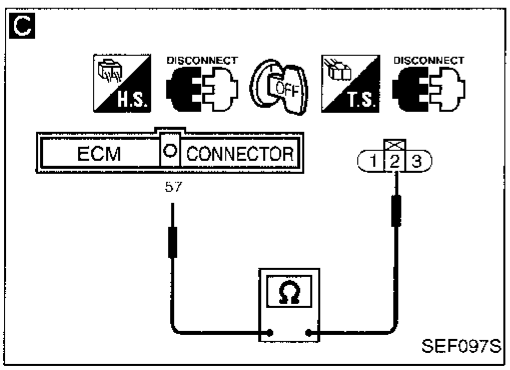

CHECK INPUT SIGNAL CIRCUIT.
1. Disconnect ECM harness connector.
2. Check harness continuity between ECM terminal ⑤⑦ and terminal ②.

   Continuity should exist.
   If OK, check harness for short.

NG → Repair harness or connectors.

OK ↓

CHECK COMPONENT
(Absolute pressure sensor).
Refer to "COMPONENT INSPECTION", EC-106.

NG → Replace absolute pressure sensor.

OK ↓

Disconnect and reconnect harness connectors in the circuit. Then retest.

↓ Trouble is not fixed.

Ⓐ

(Go to next page.)

Absolute Pressure Sensor (Cont'd)

Ⓐ

Check ECM pin terminals for damage and check the connection of ECM harness connector. Reconnect ECM harness connector and retest.

INSPECTION END

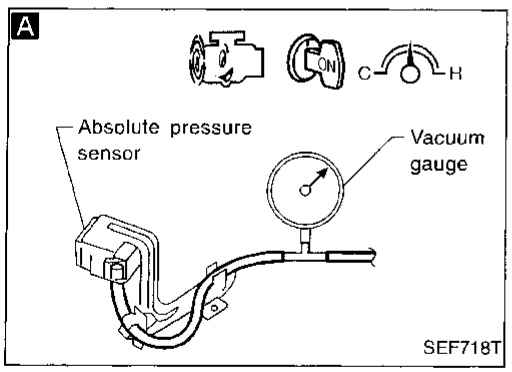

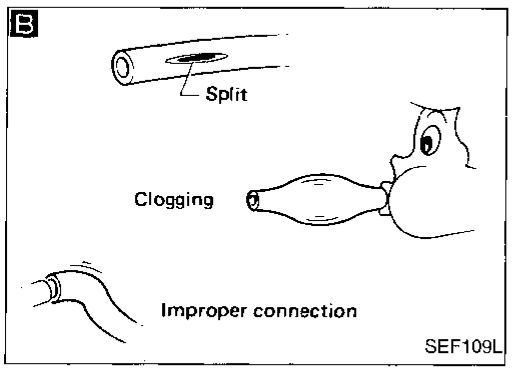

Procedure B

INSPECTION START

A

CHECK VACUUM SOURCE TO ABSOLUTE PRESSURE SENSOR.
1. Start engine and warm it up sufficiently.
2. Stop engine.
3. Disconnect vacuum hose between absolute pressure sensor and MAP/BARO switch solenoid valve.
4. Install vacuum gauge between absolute pressure sensor and MAP/BARO switch solenoid valve.
5. Restart engine and let it idle.
6. Read the indication of vacuum gauge at idle speed.
   Vacuum pressure:
   Approx. –66.7 kPa (–500 mmHg, –19.69 inHg, –9.67 psi)

NG → CHECK VACUUM HOSE. Check vacuum hose for clogging, cracks or improper connection. If NG, repair or replace the hose.

OK → CHECK INTAKE SYSTEM. Check intake system for air leaks.

OK

B

CHECK HOSE BETWEEN ABSOLUTE PRESSURE SENSOR AND MAP/BARO SWITCH SOLENOID VALVE.
1. Turn ignition switch "OFF".
2. Check hose for clogging, cracks or improper connection.

NG → Repair or reconnect hose.

OK

CHECK COMPONENT (Absolute pressure sensor). Refer to "COMPONENT INSPECTION" on next page.

NG → Replace absolute pressure sensor.

OK

Disconnect and reconnect harness connectors in the circuit. Then retest.

Trouble is not fixed.

Check ECM pin terminals for damage and check the connection of ECM harness connector. Reconnect ECM harness connector and retest.

INSPECTION END

Absolute Pressure Sensor (Cont'd)

COMPONENT INSPECTION

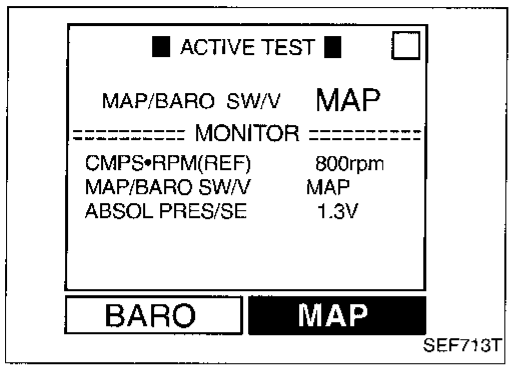

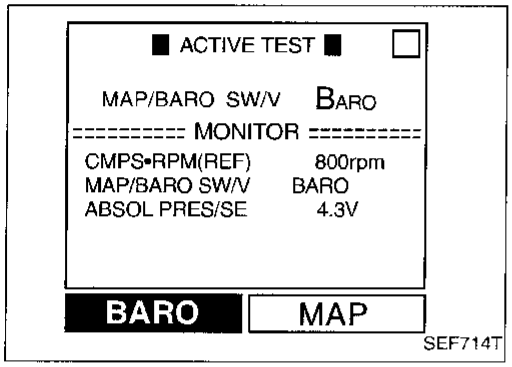

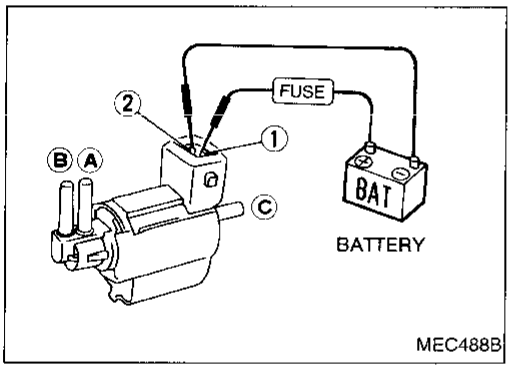

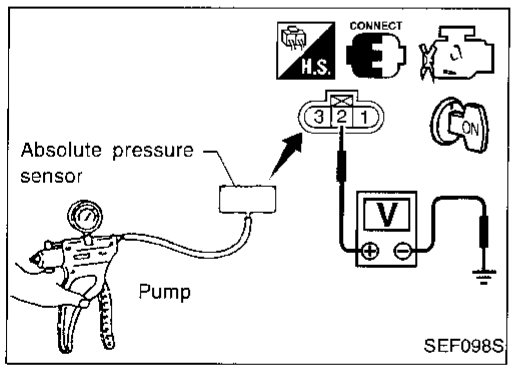

Absolute pressure sensor

1. Start engine and warm it up sufficiently.
2. Perform "MAP/BARO SW/V" in "ACTIVE TEST" mode with CONSULT.
3. Check the following.
   - When "MAP" is selected, "ABSOL PRES/SE" indicates approximately 1.3V.
   - When "BARO" is selected, "ABSOL PRES/SE" indicates approximately 4.3V.
4. If NG, check MAP/BARO switch solenoid valve.
   (1) Turn ignition switch "OFF".
   (2) Remove MAP/BARO switch solenoid valve.
   (3) Check air passage continuity.

Condition	Air passage continuity between Ⓐ and Ⓑ	Air passage continuity between Ⓐ and Ⓒ
12V direct current supply between terminals ① and ②	Yes	No
No supply	No	Yes

   (4) If NG, replace MAP/BARO switch solenoid valve; if OK, go to step 5.

5. Remove absolute pressure sensor with its harness connector connected.
6. Remove hose from absolute pressure sensor.
7. Turn ignition switch "ON" and check output voltage between terminal ② and engine ground.
   The voltage should be 3.2 to 4.8 V.
8. Use pump to apply vacuum of −26.7 kPa (−200 mmHg, −7.87 inHg, −3.87 psi) to absolute pressure sensor as shown in figure and check the output voltage.
   The voltage should be 1.0 to 1.4 V lower than the value measured in step 3.

CAUTION:
Always calibrate the vacuum pump gauge when using it.

9. If NG, replace absolute pressure sensor.

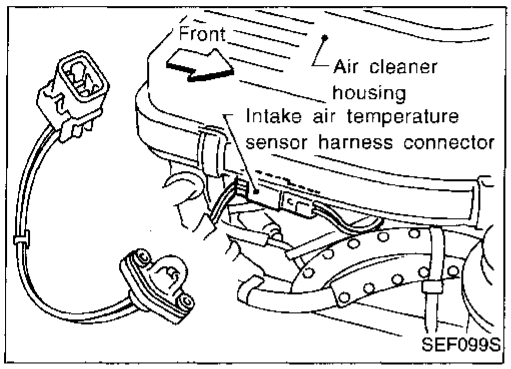

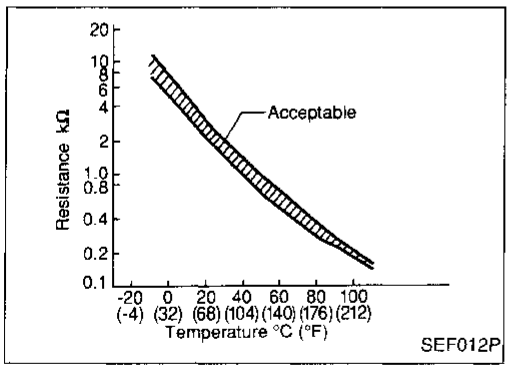

Intake Air Temperature Sensor

COMPONENT DESCRIPTION

The intake air temperature sensor is mounted to the air duct. The sensor detects intake air temperature and transmits a signal to the ECM.

The temperature sensing unit uses a thermistor, which is sensitive to the change in temperature. Electrical resistance of the thermistor decreases in response to the temperature rise.

This sensor is not used to control the engine system. It is used only for the on board diagnosis.

〈Reference data〉

Intake air temperature °C (°F)	Voltage* (V)	Resistance kΩ
20 (68)	3.5	2.1 - 2.9
80 (176)	1.23	0.27 - 0.38

*: These data are reference values and are measured between ECM terminal 28 (Intake air temperature sensor) and ECM terminal 43 (ECCS ground).

ON BOARD DIAGNOSIS LOGIC

Diagnostic Trouble Code No.	Malfunction is detected when ...	Check Items (Possible Cause)
P0110 0401	A) An excessively low or high voltage from the sensor is sent to ECM.* B) Rationally incorrect voltage from the sensor is sent to ECM, compared with the voltage signal from engine coolant temperature sensor.	● Harness or connectors (The sensor circuit is open or shorted.) ● Intake air temperature sensor

*: When this malfunction is detected, the ECM enters fail-safe mode and the MIL lights up. (Refer to EC-76.)

Engine operating condition in fail-safe mode
The ECM controls on the assumption that the intake air temperature is 20°C (68°F).

Intake Air Temperature Sensor (Cont'd)

DIAGNOSTIC TROUBLE CODE CONFIRMATION PROCEDURE

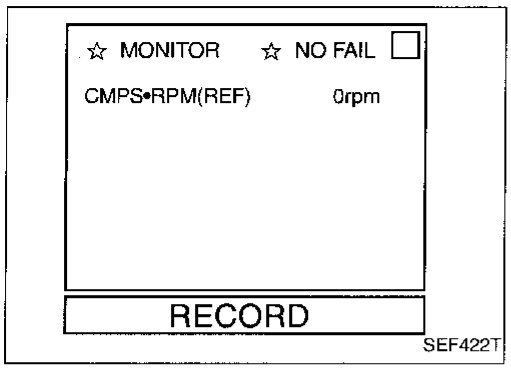

Procedure for malfunction A

1) Turn ignition switch "ON".
2) Select "DATA MONITOR" mode with CONSULT.
3) Wait at least 5 seconds.

OR

1) Turn ignition switch "ON" and wait at least 5 seconds.
2) Select MODE 7 with GST.

OR

1) Turn ignition switch "ON" and wait at least 5 seconds.
2) Turn ignition switch "OFF", wait at least 7 seconds and then turn "ON".
3) Perform "Diagnostic Test Mode II (Self-diagnostic results)" with ECM.

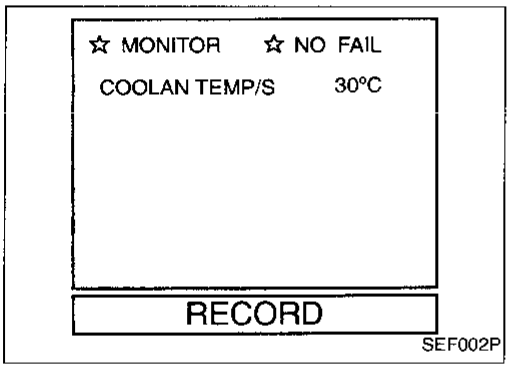

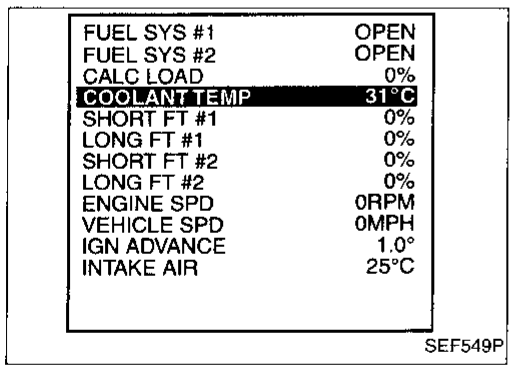

Procedure for malfunction B

1) Lift up vehicle and open engine hood.
2) Wait until engine coolant temperature is less than 90°C (194°F).
   (a) Turn ignition switch "ON".
   (b) Select "DATA MONITOR" mode with CONSULT.
   (c) Check the engine coolant temperature.
   (d) If the engine coolant temperature is not less than 90°C (194°F), turn ignition switch "OFF" and cool down engine.
   - Perform the following steps before engine coolant temperature is above 90°C (194°F).
3) Turn ignition switch "ON".
4) Select "DATA MONITOR" mode with CONSULT.
5) Start engine.
6) Shift selector lever to "D" position.
7) Hold vehicle speed at 70 to 80 km/h (43 to 50 MPH) for 2 minutes.

OR

1) Lift up vehicle and open engine hood.
2) Wait until engine coolant temperature is less than 90°C (194°F).
   (a) Turn ignition switch "ON".
   (b) Select MODE 1 with GST.
   (c) Check the engine coolant temperature.
   (d) If the engine coolant temperature is not less than 90°C (194°F), turn ignition switch "OFF" and cool down engine.
   - Perform the following steps before engine coolant temperature is above 90°C (194°F).
3) Start engine.
4) Shift selector lever to "D" position.
5) Hold vehicle speed at 70 to 80 km/h (43 to 50 MPH) for 2 minutes.
6) Select MODE 7 with GST.

OR

Intake Air Temperature Sensor (Cont'd)

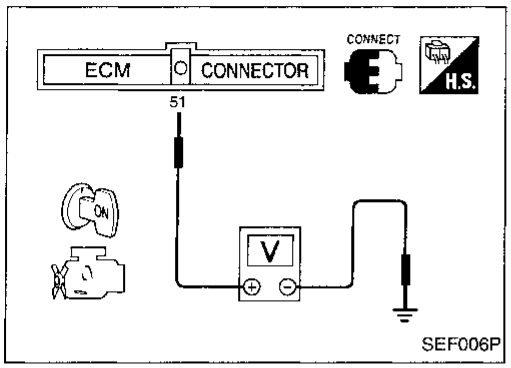

NO TOOLS

1) Lift up vehicle and open engine hood.
2) Wait until engine coolant temperature is less than 90°C (194°F).
   (a) Turn ignition switch "ON".
   (b) Check voltage between ECM terminal (51) and ground.
   Voltage: More than 1.0 (V)
   (c) If the voltage is not more than 1.0 (V), turn ignition switch "OFF" and cool down engine.

- Perform the following steps before the voltage is below 1.0V.

3) Start engine.
4) Shift selector lever to "D" position.
5) Hold vehicle speed at 70 to 80 km/h (43 to 50 MPH) for 2 minutes.
6) Turn ignition switch "OFF", wait at least 7 seconds and then turn "ON".
7) Perform "Diagnostic Test Mode II (Self-diagnostic results)" with ECM.

EC-IATS-01

: Detectable line for DTC
: Non-detectable line for DTC

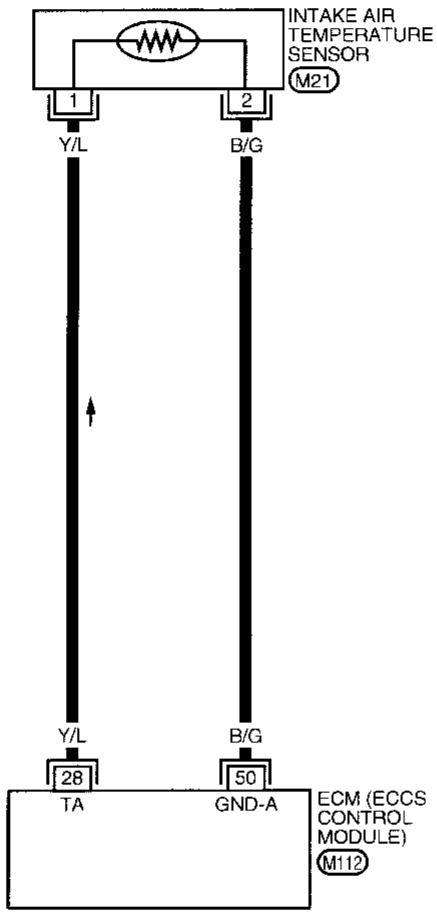

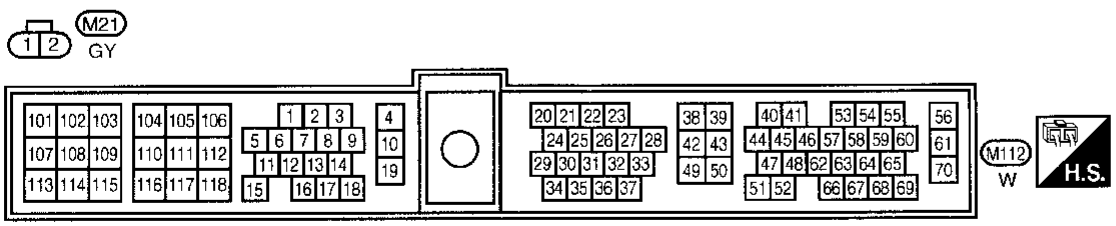

AEC041A

Intake Air Temperature Sensor (Cont'd)

DIAGNOSTIC PROCEDURE

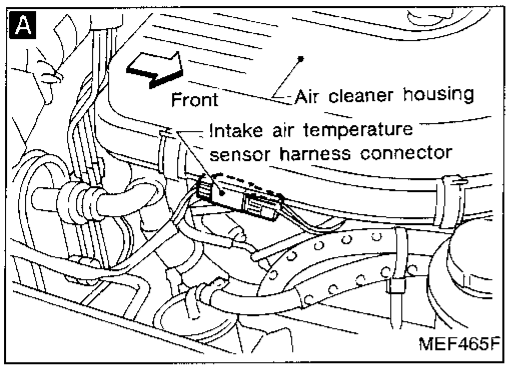

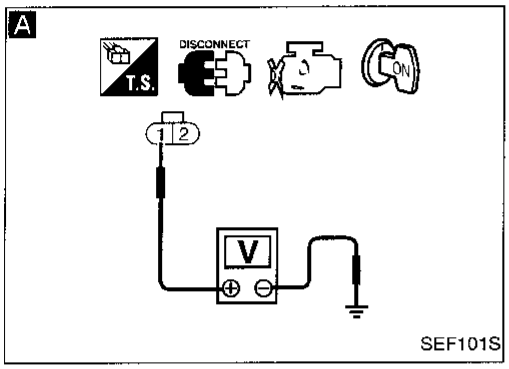

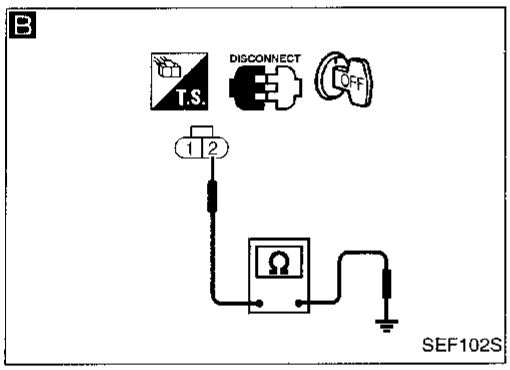

INSPECTION START

↓

A

CHECK POWER SUPPLY.
1. Turn ignition switch "OFF".
2. Disconnect intake air temperature sensor harness connector.
3. Turn ignition switch "ON".
4. Check voltage between terminal ① and ground.

Voltage:
Approximately 5V

NG → Repair harness or connectors.

OK ↓

B

CHECK GROUND CIRCUIT.
1. Turn ignition switch "OFF".
2. Check harness continuity between terminal ② and engine ground.

Continuity should exist.
If OK, check harness for short.

NG → Check the following.
- Harness for open or short between ECM and intake air temperature sensor

If NG, repair harness or connectors.

OK ↓

CHECK COMPONENT
(Intake air temperature sensor).
Refer to "COMPONENT INSPECTION" on next page.

NG → Replace intake air temperature sensor.

OK ↓

Disconnect and reconnect harness connectors in the circuit. Then retest.

Trouble is not fixed. ↓

Check ECM pin terminals for damage and check the connection of ECM harness connector.
Reconnect ECM harness connector and retest.

↓

INSPECTION END

Intake Air Temperature Sensor (Cont'd)

COMPONENT INSPECTION

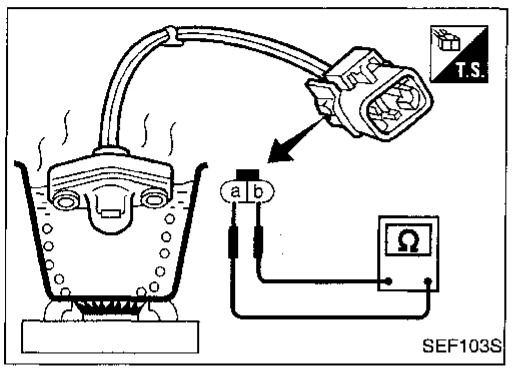

Intake air temperature sensor

Check resistance as shown in the figure.

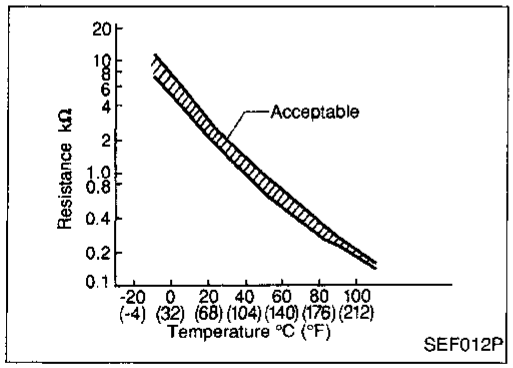

⟨Reference data⟩

Intake air temperature °C (°F)	Resistance kΩ
20 (68)	2.1 - 2.9
80 (176)	0.27 - 0.38

If NG, replace intake air temperature sensor.

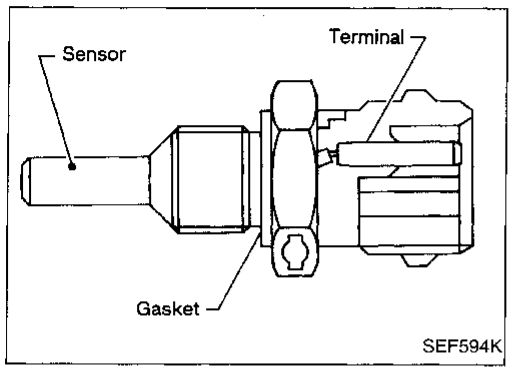

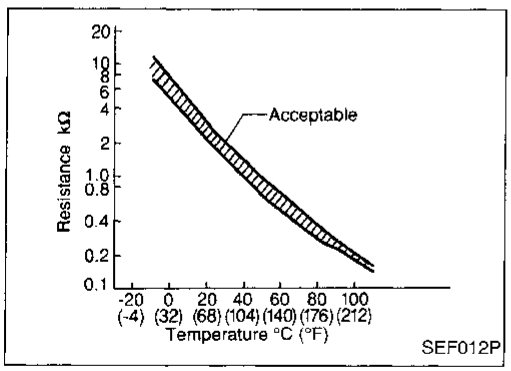

Engine Coolant Temperature Sensor (ECTS)

COMPONENT DESCRIPTION

The engine coolant temperature sensor is used to detect the engine coolant temperature. The sensor modifies a voltage signal from the ECM. The modified signal returns to the ECM as the engine coolant temperature input. The sensor uses a thermistor which is sensitive to the change in temperature. The electrical resistance of the thermistor decreases as temperature increases.

⟨Reference data⟩

Engine coolant temperature °C (°F)	Voltage* (V)	Resistance (kΩ)
–10 (14)	4.4	7.0 - 11.4
20 (68)	3.5	2.1 - 2.9
50 (122)	2.2	0.68 - 1.00
90 (194)	0.9	0.236 - 0.260

*: These data are reference values and measured between ECM terminal 51 (Engine coolant temperature sensor) and ECM terminal 43 (ECCS ground).

ON BOARD DIAGNOSIS LOGIC

Diagnostic Trouble Code No.	Malfunction is detected when ...	Check Items (Possible Cause)
P0115 0103	● An excessively high or low voltage from the sensor is sent to ECM.*	● Harness or connectors (The sensor circuit is open or shorted.) ● Engine coolant temperature sensor

*: When this malfunction is detected, the ECM enters fail-safe mode and the MIL lights up. (Refer to EC-76.)

Engine operating condition in fail-safe mode
Engine coolant temperature will be determined by ECM based on the time after turning ignition switch "ON" or "START". CONSULT displays the engine coolant temperature decided by ECM.

Condition	Engine coolant temperature decided (CONSULT display)
Just as ignition switch is turned ON or START	20°C (68°F)
More than approx. 6 minutes after ignition ON or START	80°C (176°F)
Except as shown above	20 - 80°C (68 - 176°F) (Depends on the time)

Engine Coolant Temperature Sensor (ECTS) (Cont'd)

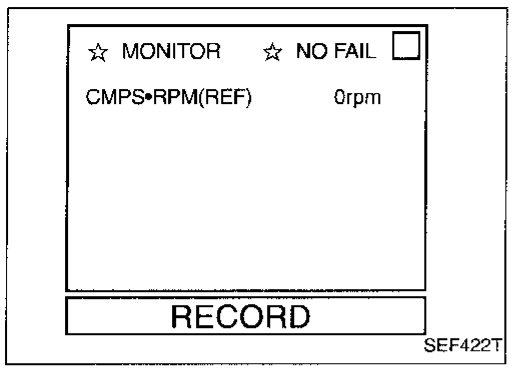

DIAGNOSTIC TROUBLE CODE CONFIRMATION PROCEDURE

1) Turn ignition switch "ON".
2) Select "DATA MONITOR" mode with CONSULT.
3) Wait at least 5 seconds.

OR

1) Turn ignition switch "ON" and wait at least 5 seconds.
2) Select "MODE 7" with GST.

OR

1) Turn ignition switch "ON" and wait at least 5 seconds.
2) Turn ignition switch "OFF", wait at least 7 seconds and then turn "ON".
3) Perform "Diagnostic Test Mode II (Self-diagnostic results)" with ECM.

Engine Coolant Temperature Sensor (ECTS) (Cont'd)

EC-ECTS-01

: Detectable line for DTC
: Non-detectable line for DTC

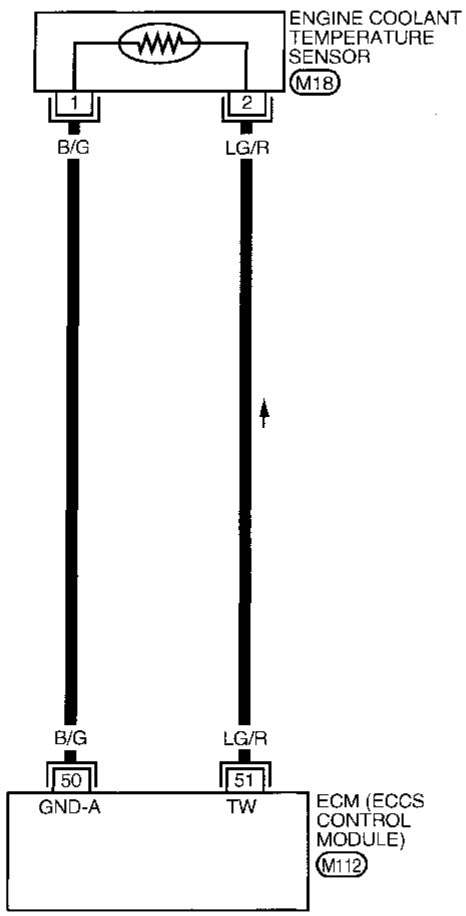

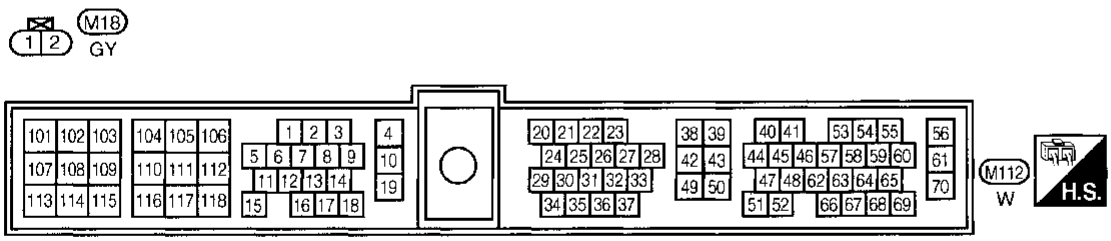

AEC042A

Engine Coolant Temperature Sensor (ECTS) (Cont'd)

DIAGNOSTIC PROCEDURE

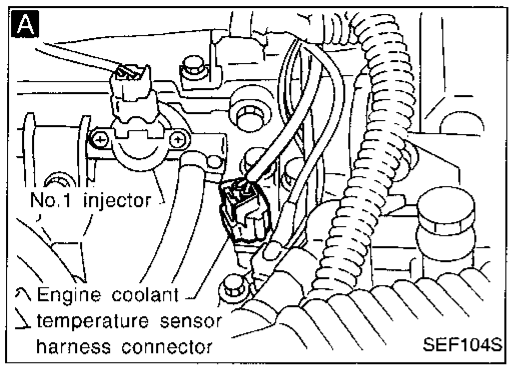

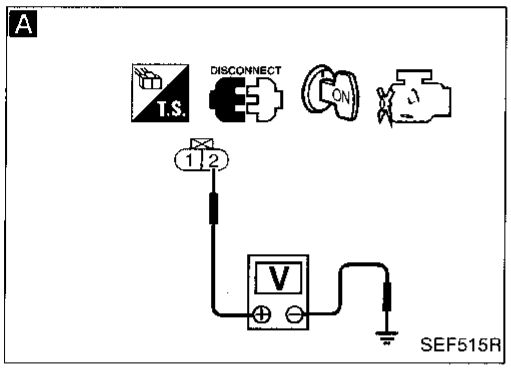

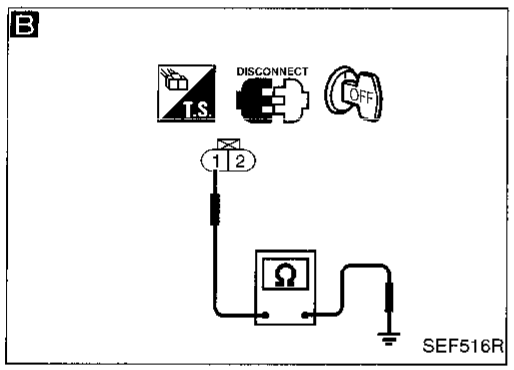

INSPECTION START

↓

A

CHECK POWER SUPPLY.
1. Turn ignition switch "OFF".
2. Disconnect engine coolant temperature sensor harness connector.
3. Turn ignition switch "ON".
4. Check voltage between terminal ② and ground with CONSULT or tester.

Voltage:
Approximately 5V

NG → Repair harness or connectors.

OK ↓

B

CHECK GROUND CIRCUIT.
1. Turn ignition switch "OFF".
2. Check harness continuity between terminal ① and engine ground.

Continuity should exist.
If OK, check harness for short.

NG → Check the following.
- Harness for open or short between ECM and engine coolant temperature sensor

If NG, repair harness or connectors.

OK ↓

CHECK COMPONENT
(Engine coolant temperature sensor).
Refer to "COMPONENT INSPECTION" on next page.

NG → Replace engine coolant temperature sensor.

OK ↓

Disconnect and reconnect harness connectors in the circuits. Then retest.

Trouble is not fixed. ↓

Check ECM pin terminals for damage and check the connection of ECM harness connector. Reconnect ECM harness connector and retest.

↓

INSPECTION END

Engine Coolant Temperature Sensor (ECTS) (Cont'd)

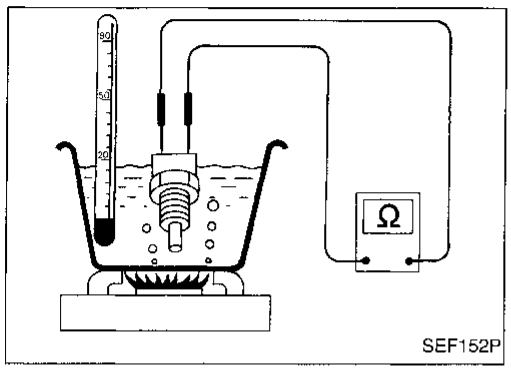

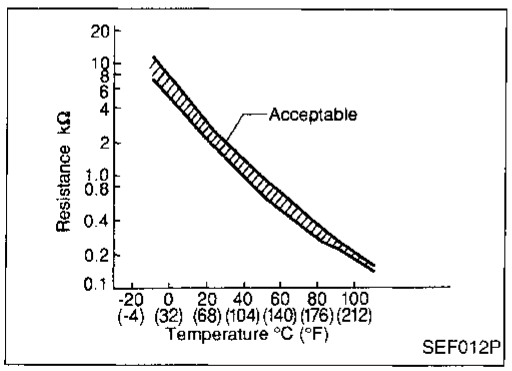

COMPONENT INSPECTION

Engine coolant temperature sensor

Check resistance as shown in the figure.

⟨Reference data⟩

Temperature °C (°F)	Resistance kΩ
20 (68)	2.1 - 2.9
50 (122)	0.68 - 1.00
90 (194)	0.236 - 0.260

If NG, replace engine coolant temperature sensor.

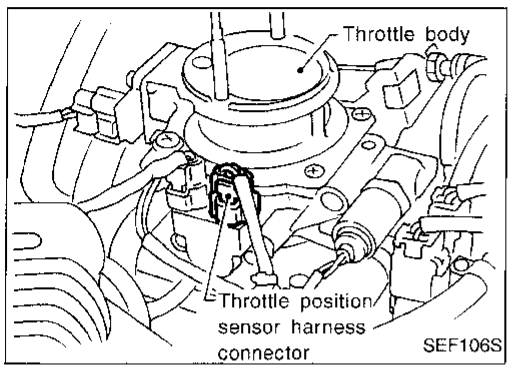

Throttle Position Sensor

COMPONENT DESCRIPTION

The throttle position sensor responds to the accelerator pedal movement. This sensor is a kind of potentiometer which transforms the throttle position into output voltage, and emits the voltage signal to the ECM. In addition, the sensor detects the opening and closing speed of the throttle valve and feeds the voltage signal to the ECM.

Idle position of the throttle valve is determined by the ECM receiving the signal from the throttle position sensor. This controls engine operation such as fuel cut. The throttle position sensor unit contains a built-in "Wide open and closed throttle position switch".

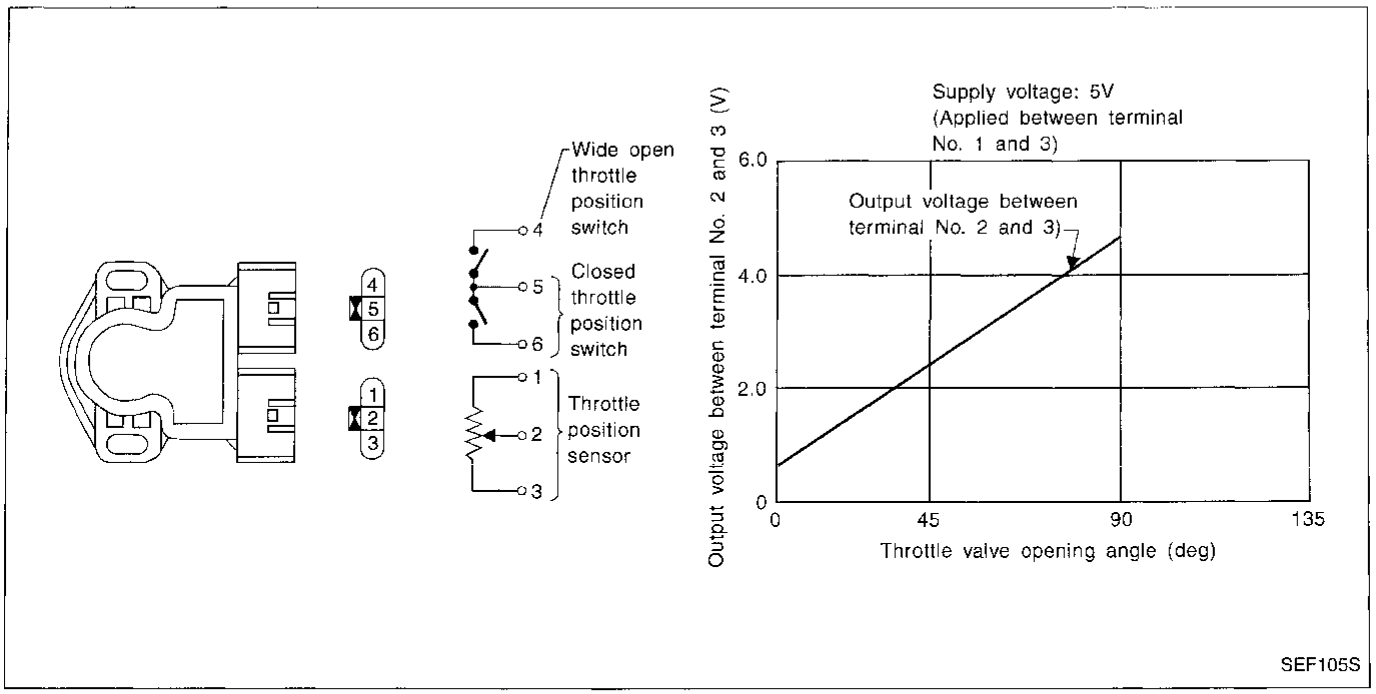

ECM TERMINALS AND REFERENCE VALUE

Specification data are reference values and are measured between each terminal and ㊸ (ECCS ground).

TERMINAL NO.	WIRE COLOR	ITEM	CONDITION	DATA (DC voltage)
23	W	Throttle position sensor	Ignition switch "ON" └ Accelerator pedal released	0.3 - 0.7V
			Ignition switch "ON" └ Accelerator pedal fully depressed	Approximately 4V
49	P	Sensors' power supply	Ignition switch "ON"	Approximately 5V
50	B/G	Sensors' ground	Engine is running. (Warm-up condition) └ Idle speed	0.001 - 0.02V

CONSULT REFERENCE VALUE IN DATA MONITOR MODE

Specification data are reference values.

MONITOR ITEM	CONDITION		SPECIFICATION
THRTL POS SEN	● Ignition switch: ON (Engine stopped)	Throttle valve fully closed	0.3 - 0.7V
		Throttle valve fully opened	Approx. 4.0V
ABSOL TH·P/S	● Ignition switch: ON (Engine stopped)	Throttle valve fully closed	0.0%
		Throttle valve fully opened	Approx. 84%

ON BOARD DIAGNOSIS LOGIC

Diagnostic Trouble Code No.	Malfunction is detected when ...	Check Items (Possible Cause)
P0120 0403	● An excessively low or high voltage from the sensor is sent to ECM.* ● Voltage sent to ECM is not practical when compared with mass air flow sensor and camshaft position sensor signals.	● Harness or connectors (The sensor circuit is open or shorted.) ● Throttle position sensor

*: When this malfunction is detected, the ECM enters fail-safe mode and the MIL lights up. (Refer to EC-76.)

Engine operating condition in fail-safe mode
Throttle position will be determined based on the injected fuel amount and the engine speed. Therefore, acceleration will be poor.

Condition	Driving condition
When engine is idling	Normal
When accelerating	Poor acceleration

Throttle Position Sensor (Cont'd)

OVERALL FUNCTION CHECK

Use this procedure to check the overall function of the throttle position sensor circuit. During this check, a 1st trip DTC might not be confirmed.

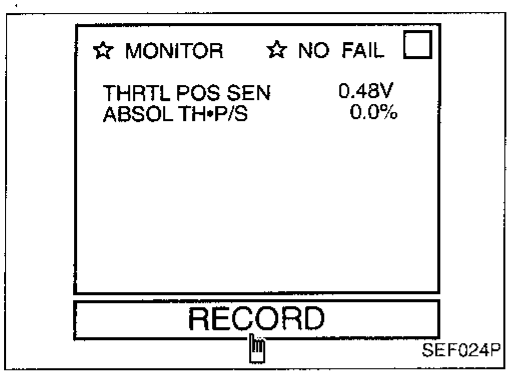

1) Start engine and warm it up sufficiently.
2) Turn ignition switch "OFF" and wait at least 7 seconds.
3) Turn ignition switch "ON".
4) Select "MANU TRIG" and "HI SPEED" in "DATA MONITOR" mode with CONSULT.
5) Select "THRTL POS SEN" and "ABSOL TH•P/S" in "DATA MONITOR" mode with CONSULT.
6) Press RECORD on CONSULT SCREEN at the same time accelerator pedal is depressed.
7) Print out the recorded data and check the following:
   - The voltage when accelerator pedal fully released is 0.3 - 0.7V.
   - The voltage rise is linear in response to accelerator pedal depression.
   - The voltage when accelerator pedal fully depressed is approximately 4V.

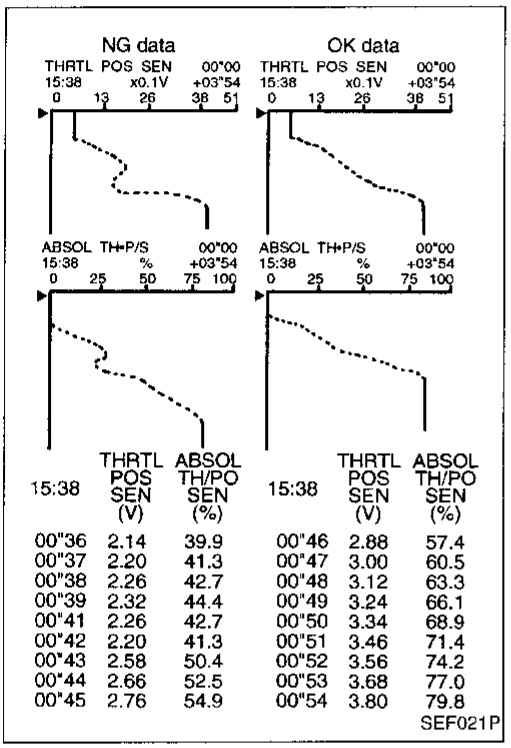

15:38	THRTL POS SEN (V)	ABSOL TH/PO SEN (%)	15:38	THRTL POS SEN (V)	ABSOL TH/PO SEN (%)
00"36	2.14	39.9	00"46	2.88	57.4
00"37	2.20	41.3	00"47	3.00	60.5
00"38	2.26	42.7	00"48	3.12	63.3
00"39	2.32	44.4	00"49	3.24	66.1
00"41	2.26	42.7	00"50	3.34	68.9
00"42	2.20	41.3	00"51	3.46	71.4
00"43	2.58	50.4	00"52	3.56	74.2
00"44	2.66	52.5	00"53	3.68	77.0
00"45	2.76	54.9	00"54	3.80	79.8

OR

1) Start engine and warm it up sufficiently.
2) Turn ignition switch "OFF" and wait at least 7 seconds.
3) Turn ignition switch "ON".
4) Check the voltage between ECM terminal ㉓ and ㊸ (ground) and check the following:
   - The voltage when accelerator pedal fully released is 0.3 - 0.7V.
   - The voltage rise is linear in response to accelerator pedal depression.
   - The voltage when accelerator pedal fully depressed is approximately 4V.

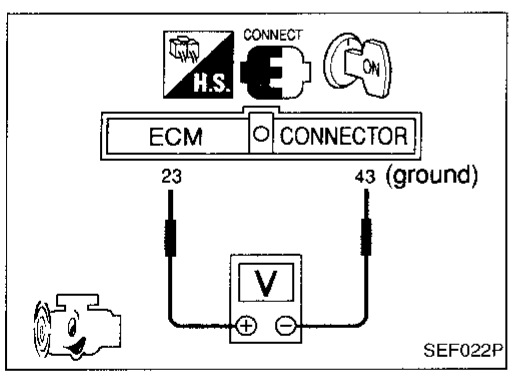

EC-TPS-01

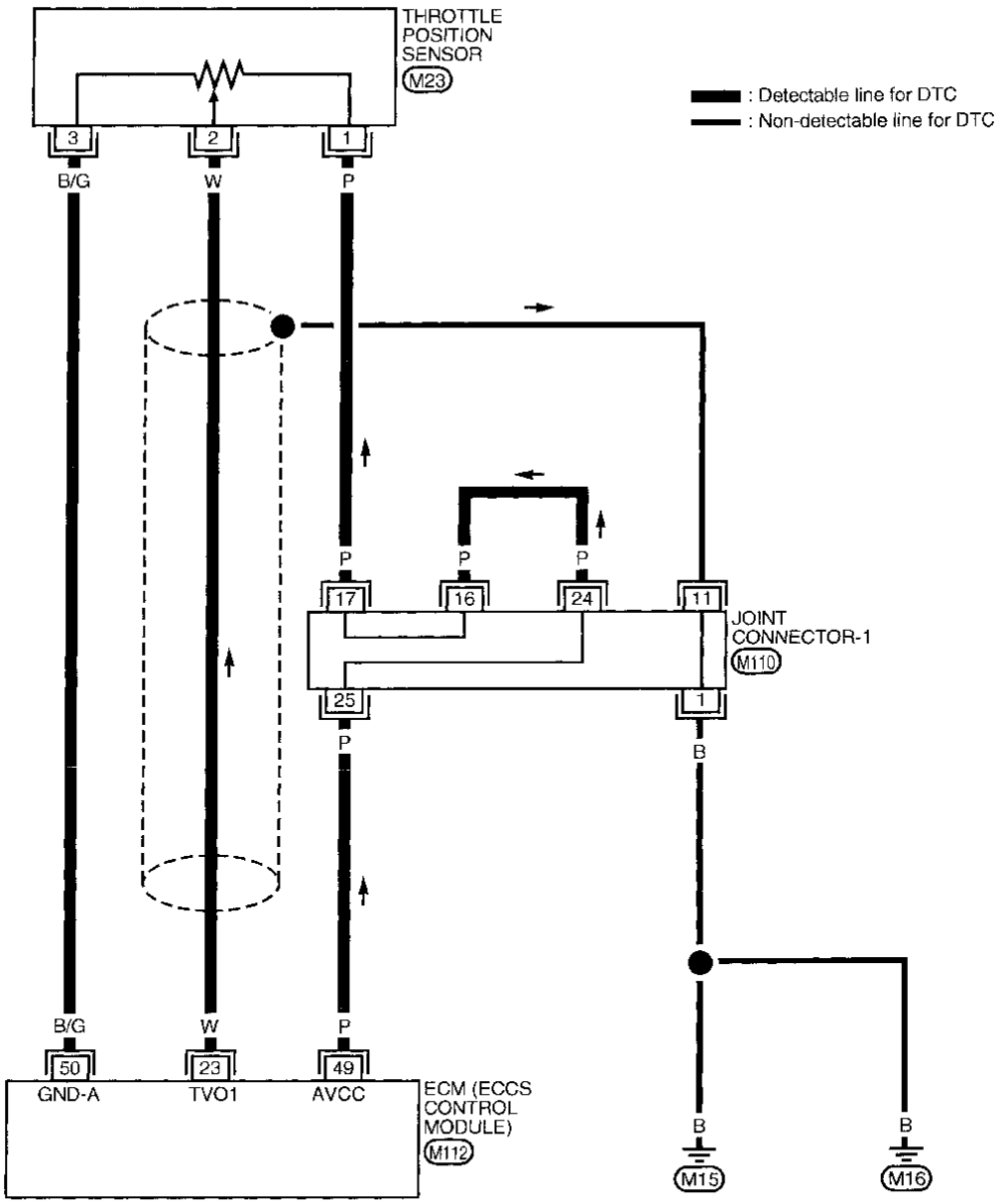

Refer to last page (Foldout page).
M110

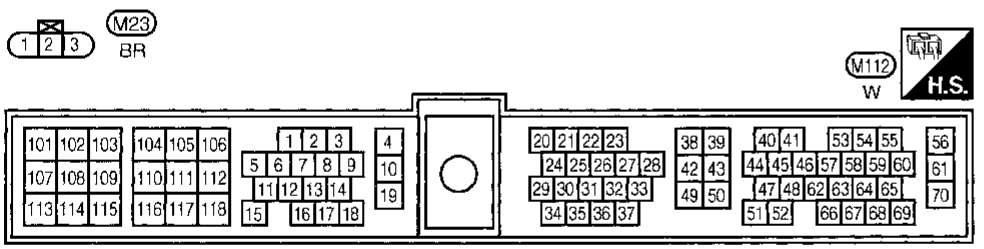

AEC043A

Throttle Position Sensor (Cont'd)

DIAGNOSTIC PROCEDURE

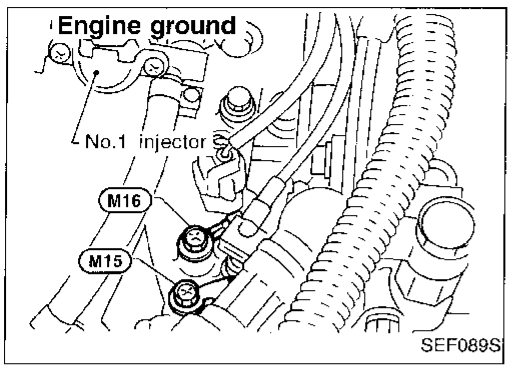

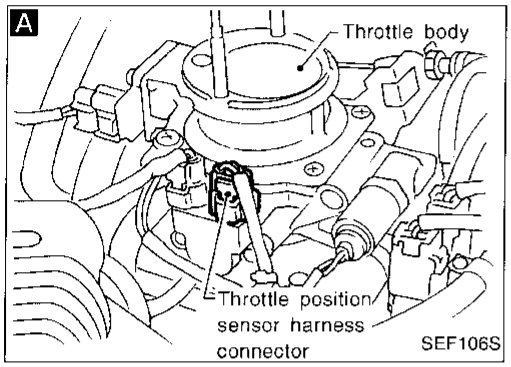

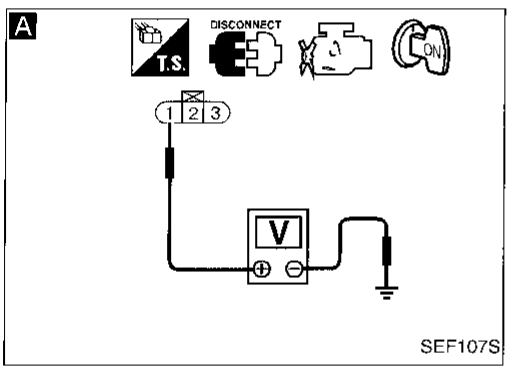

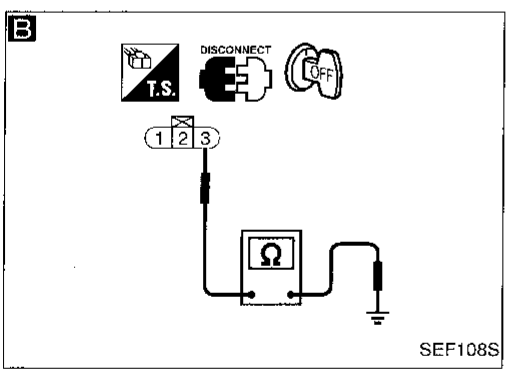

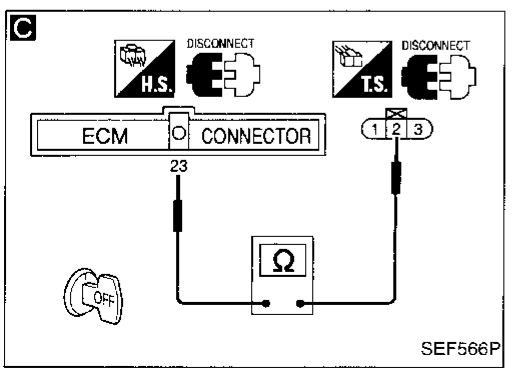

INSPECTION START

↓

ADJUST THROTTLE POSITION SENSOR.
Perform BASIC INSPECTION, EC-72.

↓ OK

CHECK SHIELD CIRCUIT.
1. Turn ignition switch "OFF".
2. Loosen and retighten engine ground screws.
3. Remove joint connector-1.
4. Check the following.
   - Continuity between joint connector-1 terminal ① and ground
   - Joint connector-1 (Refer to "HARNESS LAYOUT" in EL section.)

   Continuity should exist.
   If OK, check harness for short. Then reconnect joint connector-1.

NG → Repair harness or connectors.

↓ OK

A

CHECK POWER SUPPLY.
1. Disconnect throttle position sensor harness connector.
2. Turn ignition switch "ON".
3. Check voltage between terminal ① and ground with CONSULT or tester.
   Voltage: Approximately 5V

NG → Check the following.
- Joint connector-1
- Harness for open or short between throttle position sensor and ECM

If NG, repair harness or connectors.

↓ OK

B

CHECK GROUND CIRCUIT.
1. Turn ignition switch "OFF".
2. Check harness continuity between terminal ③ and engine ground.
   Continuity should exist.
   If OK, check harness for short.

NG → Repair harness or connectors.

↓ OK

C

CHECK INPUT SIGNAL CIRCUIT.
1. Disconnect ECM harness connector.
2. Check harness continuity between ECM terminal ㉓ and terminal ②.
   Continuity should exist.
   If OK, check harness for short.

NG → Repair harness or connectors.

↓ OK

CHECK COMPONENT
(Throttle position sensor).
Refer to "COMPONENT INSPECTION" on next page.

NG → Replace throttle position sensor. To adjust it, perform BASIC INSPECTION, EC-72.

↓ OK

Ⓐ
(Go to next page.)

Throttle Position Sensor (Cont'd)

Ⓐ

↓

Disconnect and reconnect harness connectors in the circuit. Then retest.

↓ Trouble is not fixed.

Check ECM pin terminals for damage and check the connection of ECM harness connector. Reconnect ECM harness connector and retest.

↓

INSPECTION END

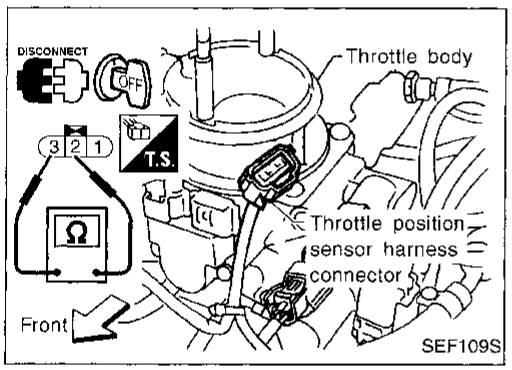

COMPONENT INSPECTION

Throttle position sensor

1. Start engine and warm it up sufficiently.
2. Turn ignition switch "OFF".
3. Disconnect throttle position sensor harness connector.
4. Check resistance between terminals ② and ③ while opening throttle valve manually.

Throttle valve conditions	Resistance at 25°C (77°F)
Completely closed	Approximately 0.5 kΩ
Partially open	0.5 - 4.0 kΩ
Completely open	Approximately 4.0 kΩ

If NG, replace throttle position sensor.
To adjust throttle position sensor, perform "BASIC INSPECTION", EC-72.

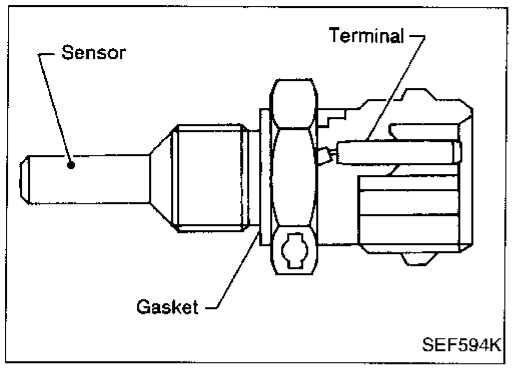

Engine Coolant Temperature (ECT) Sensor

COMPONENT DESCRIPTION

The engine coolant temperature sensor is used to detect the engine coolant temperature. The sensor modifies a voltage signal from the ECM. The modified signal returns to the ECM as the engine coolant temperature input. The sensor uses a thermistor which is sensitive to the change in temperature. The electrical resistance of the thermistor decreases as temperature increases.

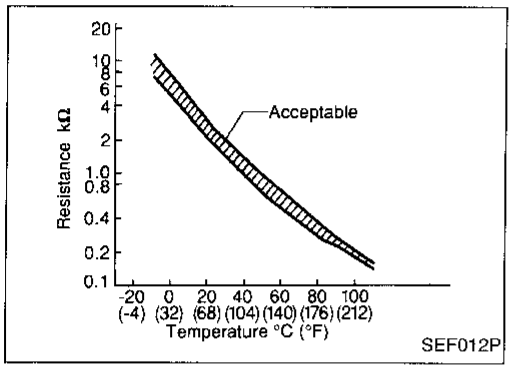

⟨Reference data⟩

Engine coolant temperature °C (°F)	Voltage* (V)	Resistance (kΩ)
–10 (14)	4.4	7.0 - 11.4
20 (68)	3.5	2.1 - 2.9
50 (122)	2.2	0.68 - 1.00
90 (194)	0.9	0.236 - 0.260

*: These data are reference values and measured between ECM terminal (51) (Engine coolant temperature sensor) and ECM terminal (43) (ECCS ground).

ON BOARD DIAGNOSIS LOGIC

Diagnostic Trouble Code No.	Malfunction is detected when ...	Check Items (Possible Cause)
P0125 0908	• Rationally incorrect voltage from the sensor is sent to ECM, even when some time has passed after starting the engine. • Engine coolant temperature is insufficient for closed loop fuel control.	• Harness or connectors (High resistance in the circuit) • Engine coolant temperature sensor • Thermostat

Engine Coolant Temperature (ECT) Sensor (Cont'd)

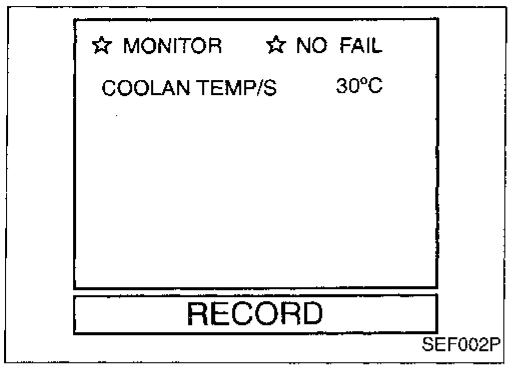

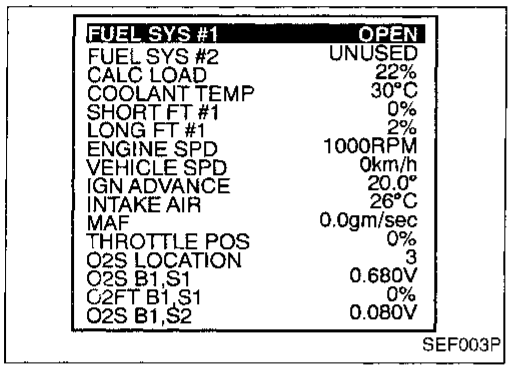

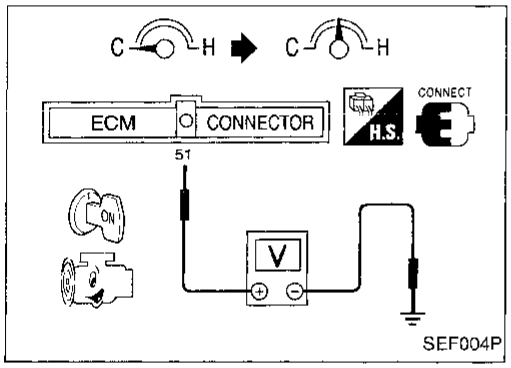

OVERALL FUNCTION CHECK

Use this procedure to check the overall function of the engine coolant temperature sensor circuit. During this check, a 1st trip DTC might not be confirmed.

Note: If both DTC P0115 (0103) and P0125 (0908) are displayed, first perform TROUBLE DIAGNOSIS FOR DTC P0115. (See EC-113.)

1) Turn ignition switch "ON".
2) Select "COOLAN TEMP/S" in "DATA MONITOR" mode with CONSULT.
3) Start engine and run it at idle speed.
4) Check that the engine coolant temperature rises to 20°C (68°F) or more within 13 minutes. (Be careful not to overheat engine.)

— OR —

1) Turn ignition switch "ON".
2) Select "MODE 1" with GST.
3) Start engine and run it at idle speed.
4) Check that the engine coolant temperature rises to 20°C (68°F) or more within 13 minutes. (Be careful not to overheat engine.)

— OR —

NO TOOLS

1) Turn ignition switch "ON".
2) Probe voltage meter between ECM terminal (51) and ground.
3) Start engine and run it at idle speed.
4) Check that voltage of engine coolant temperature changes to less than 3.5 (V) within 13 minutes. (Be careful not to overheat engine.)

Engine Coolant Temperature (ECT) Sensor (Cont'd)

EC-ECTS-01

: Detectable line for DTC
: Non-detectable line for DTC

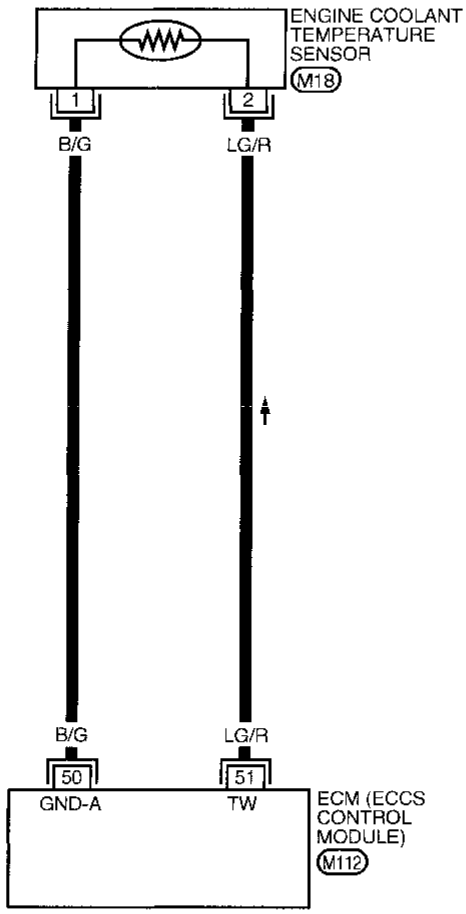

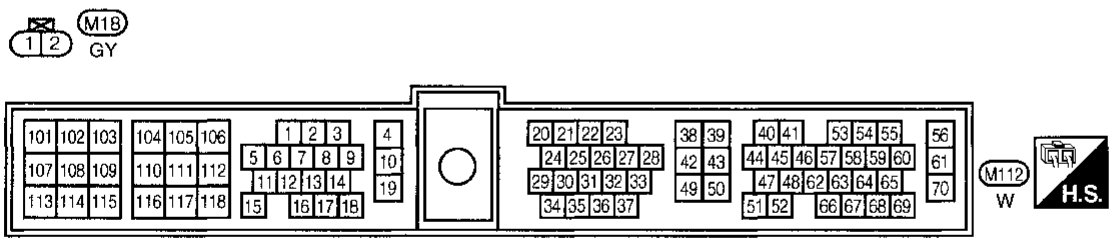

AEC042A

Engine Coolant Temperature (ECT) Sensor (Cont'd)

DIAGNOSTIC PROCEDURE

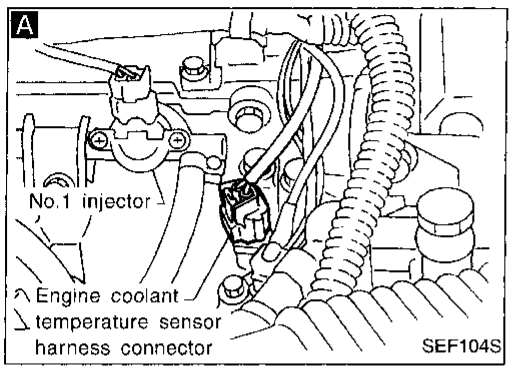

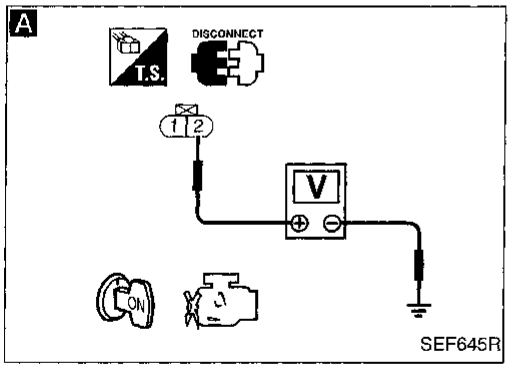

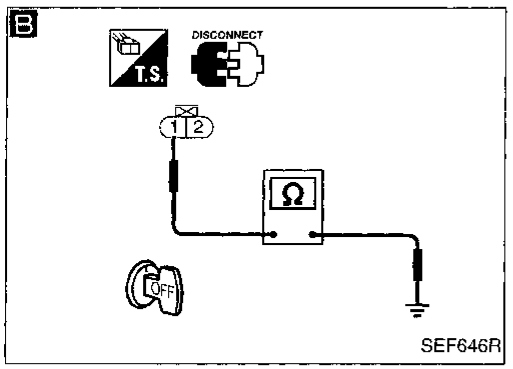

INSPECTION START

↓

A

CHECK POWER SUPPLY.
1. Turn ignition switch "OFF".
2. Disconnect engine coolant temperature sensor harness connector.
3. Turn ignition switch "ON".
4. Check voltage between terminal ② and ground with CONSULT or tester.

Voltage:
Approximately 5V

NG → Repair harness or connectors.

OK ↓

B

CHECK GROUND CIRCUIT.
1. Turn ignition switch "OFF".
2. Check harness continuity between terminal ① and engine ground.

Continuity should exist.
If OK, check harness for short.

NG → Check the following.
- Harness for open or short between ECM and engine coolant temperature sensor

If NG, repair harness or connectors.

OK ↓

CHECK COMPONENT
(Engine coolant temperature sensor).
Refer to "COMPONENT INSPECTION" on next page.

NG → Replace engine coolant temperature sensor.

OK ↓

CHECK THERMOSTAT OPERATION.
When the engine is cold [lower than 70°C (158°F)] condition, grasp lower radiator hose and confirm the engine coolant does not flow.

NG → CHECK COMPONENT (Thermostat).
Refer to LC section.
If NG, replace it.

OK ↓

Disconnect and reconnect harness connectors in the circuit. Then retest.

Trouble is not fixed. ↓

Check ECM pin terminals for damage and check the connection of ECM harness connector. Reconnect ECM harness connector and retest.

↓

INSPECTION END

Engine Coolant Temperature (ECT) Sensor (Cont'd)

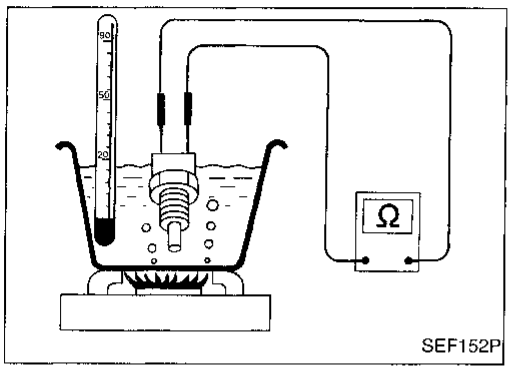

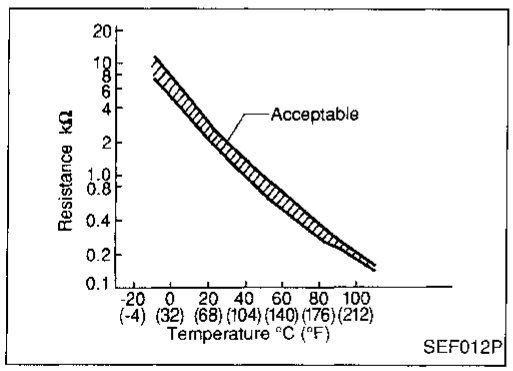

COMPONENT INSPECTION

Engine coolant temperature sensor

Check resistance as shown in the figure.

⟨Reference data⟩

Temperature °C (°F)	Resistance kΩ
20 (68)	2.1 - 2.9
50 (122)	0.68 - 1.0
90 (194)	0.236 - 0.260

If NG, replace engine coolant temperature sensor.

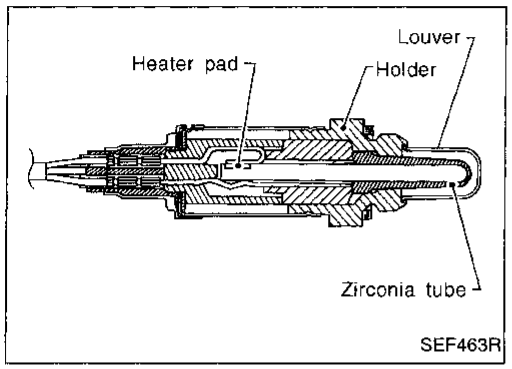

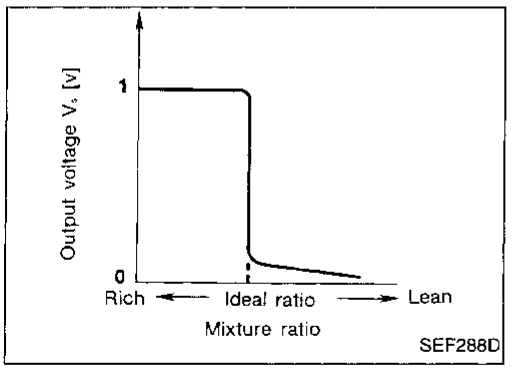

Front Heated Oxygen Sensor (Front HO2S)

COMPONENT DESCRIPTION

The front HO2S is placed into the exhaust manifold. It detects the amount of oxygen in the exhaust gas compared to the outside air. The sensor has a closed-end tube made of ceramic zirconia. The zirconia generates voltage from approximately 1V in richer conditions to 0V in leaner conditions. The sensor signal is sent to the ECM. The ECM adjusts the injection pulse duration to achieve the ideal air-fuel ratio. The ideal air-fuel ratio occurs near the radical change from 1V to 0V.

ECM TERMINALS AND REFERENCE VALUE

Specification data are reference values and are measured between each terminal and 43 (ECCS ground).

TERMINAL NO.	WIRE COLOR	ITEM	CONDITION	DATA (DC voltage)
46	W	Front heated oxygen sensor	Engine is running. After warming up sufficiently and engine speed is 2,000 rpm.	0 - Approximately 1.0V (periodically change)

CONSULT REFERENCE VALUE IN DATA MONITOR MODE

Specification data are reference values.

MONITOR ITEM	CONDITION		SPECIFICATION
FR O2 SENSOR	● Engine: After warming up	Maintaining engine speed at 2,000 rpm	0 - 0.3V ↔ Approx. 0.6 - 1.0V
FR O2 MNTR			LEAN ↔ RICH Changes more than 5 times during 10 seconds.

ON BOARD DIAGNOSIS LOGIC

Diagnostic Trouble Code No.	Malfunction is detected when ...	Check Items (Possible Cause)
P0130 0303	● An excessively high voltage from the sensor is sent to ECM. ● The voltage from the sensor is constantly approx. 0.3V. ● The maximum and minimum voltages from the sensor do not reach the specified voltages. ● The sensor does not respond between rich and lean within the specified time.	● Harness or connectors (The sensor circuit is open or shorted.) ● Front heated oxygen sensor ● Fuel pressure ● Injectors ● Intake air leaks

Front Heated Oxygen Sensor (Front HO2S) (Cont'd)

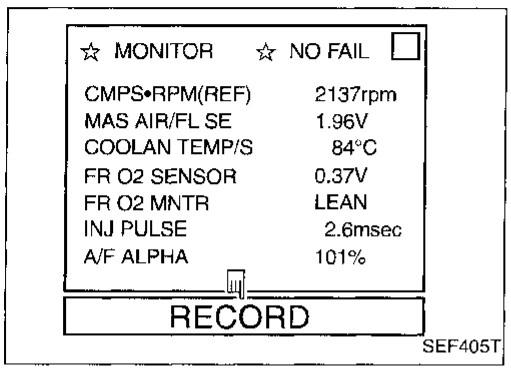

OVERALL FUNCTION CHECK

Use this procedure to check the overall function of the front heated oxygen sensor circuit. During this check, a 1st trip DTC might not be confirmed.

1) Start engine and warm it up sufficiently.
2) Select "MANU TRIG" and "HI SPEED" in "DATA MONITOR" mode with CONSULT, and select "FR O2 SENSOR" and "FR O2 MNTR".
3) Hold engine speed at 2,000 rpm under no load during the following steps.
4) Touch "RECORD" on CONSULT screen.
5) Check the following.

- "FR O2 MNTR" in "DATA MONITOR" mode changes from "RICH" to "LEAN" to "RICH" 5 times in 10 seconds.
  5 times (cycles) are counted as shown below:

cycle	1	2	3	4	5
FR O2 MNTR	R-L-R-L-R-L-R-L-R-L-R				

  R = "FR O2 MNTR", "RICH"
  L = "FR O2 MNTR", "LEAN"
- "FR O2 SENSOR" voltage goes above 0.6V at least once.
- "FR O2 SENSOR" voltage goes below 0.3V at least once.

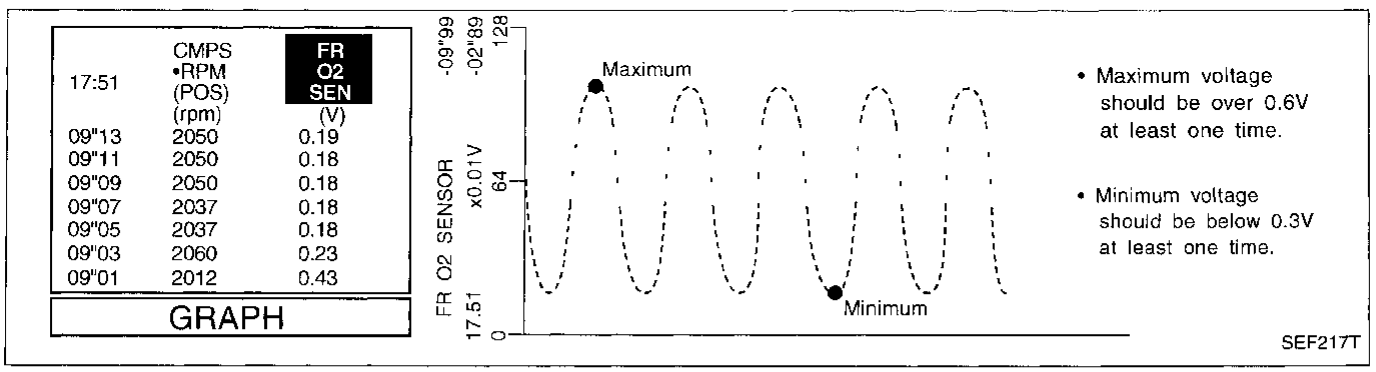

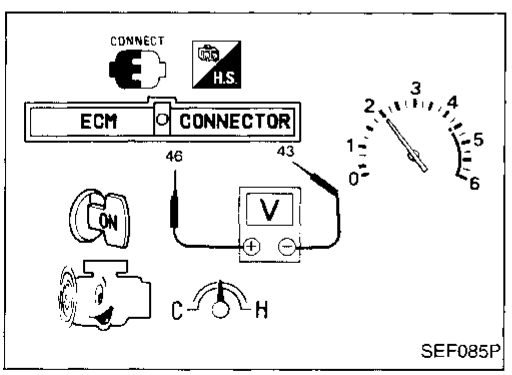

OR

1) Start engine and warm it up sufficiently.
2) Set voltmeter probes between ECM terminal ㊻ (sensor signal) and ㊸ (engine ground).
3) Check the following with engine speed held at 2,000 rpm constant under no load.

- Malfunction indicator lamp goes on more than 5 times within 10 seconds in Diagnostic Test Mode II (FRONT HEATED OXYGEN SENSOR MONITOR).
- The maximum voltage is over 0.6V at least one time.
- The minimum voltage is below 0.3V at least one time.

Front Heated Oxygen Sensor (Front HO2S) (Cont'd)

EC-FRO2-01

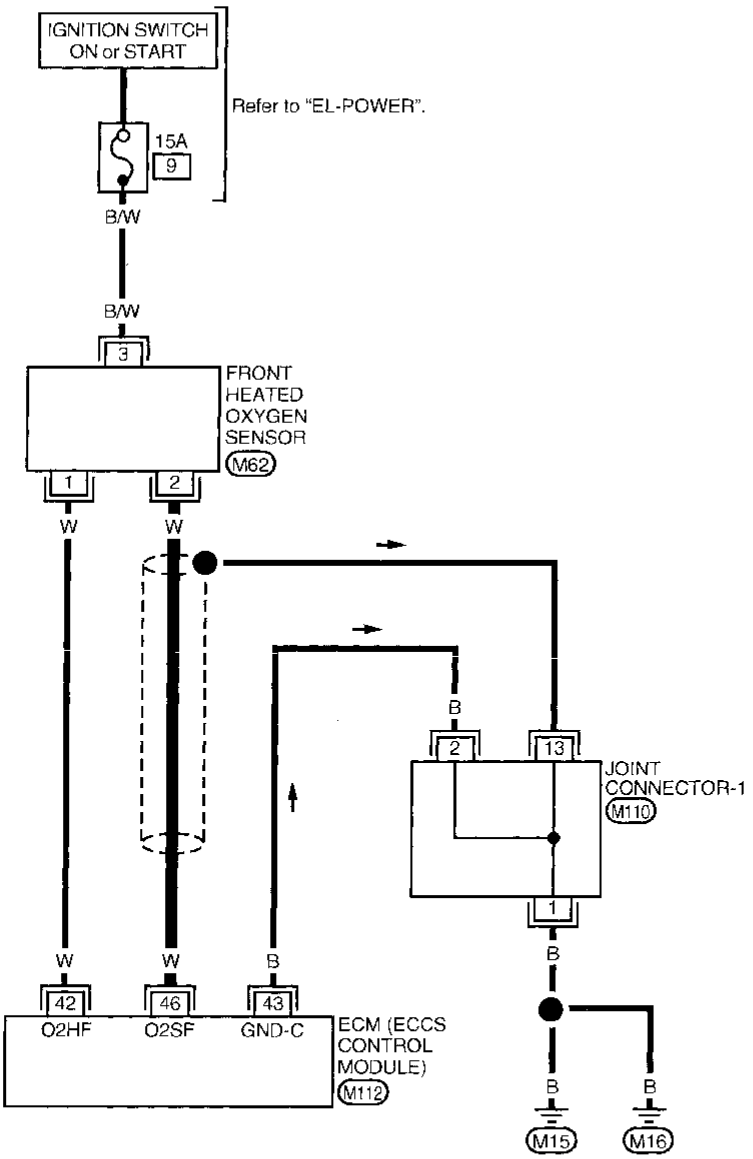

: Detectable line for DTC
: Non-detectable line for DTC

Refer to last page (Foldout page).
M110

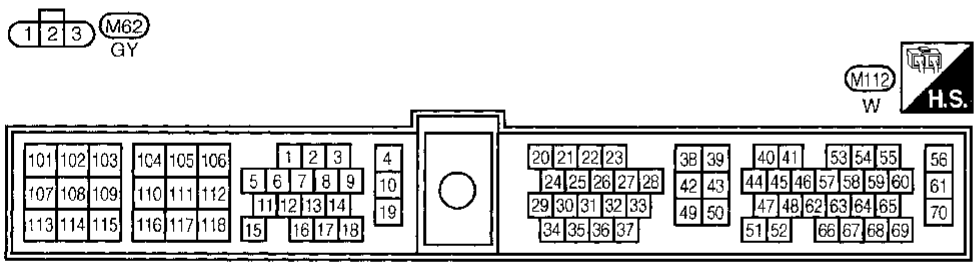

AEC304A

Front Heated Oxygen Sensor (Front HO2S) (Cont'd)

DIAGNOSTIC PROCEDURE

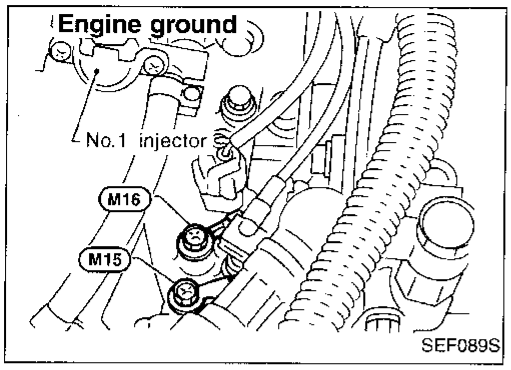

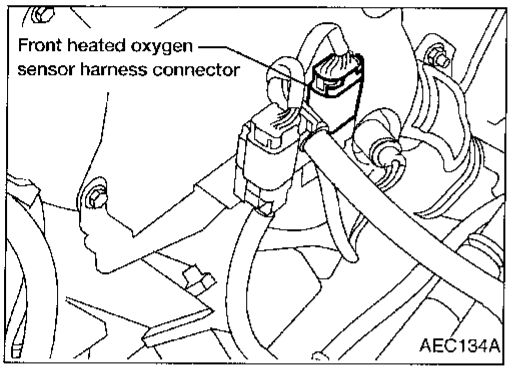

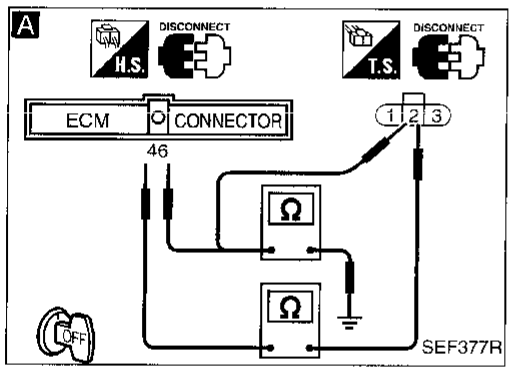

INSPECTION START

↓

CHECK SHIELD CIRCUIT.
1. Turn ignition switch "OFF".
2. Loosen and retighten engine ground screws.
3. Remove joint connector-1.
4. Check the following.
   - Continuity between joint connector-1 terminal ① and ground
   - Joint connector-1 (Refer to "HARNESS LAYOUT" in EL section.)

Continuity should exist.
If OK, check harness for short. Then reconnect joint connector-1.

NG → Repair harness or connectors.

OK ↓

A

CHECK INPUT SIGNAL CIRCUIT.
1. Disconnect front heated oxygen sensor harness connector and ECM harness connector.
2. Check harness continuity between ECM terminal ㊻ and terminal ②.
   Continuity should exist.
3. Check harness continuity between ECM terminal ㊻ (or terminal ②) and ground.
   Continuity should not exist.
   If OK, check harness for short.

NG → Repair harness or connectors.

OK ↓

Ⓐ
(Go to next page.)

Front Heated Oxygen Sensor (Front HO2S) (Cont'd)

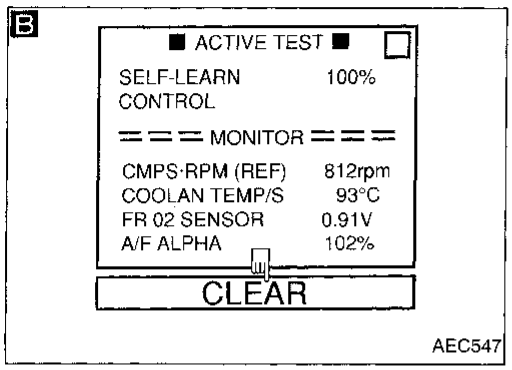

Ⓐ

B

CLEAR THE SELF-LEARNING DATA

1. Start engine and warm it up sufficiently.
2. Select "SELF-LEARNING CONT" in "ACTIVE TEST" mode with CONSULT.
3. Clear the self-learning control coefficient by touching "CLEAR".
4. Run engine for at least 10 minutes at idle speed.
   Is the 1st trip DTC P0171 or P0172 detected? Is it difficult to start engine?

Yes → Go to "TROUBLE DIAGNOSIS FOR DTC P0171, P0172", EC-148, 153.

OR

2. Turn ignition switch "OFF" and wait at least 7 seconds.
3. Disconnect mass air flow sensor harness connector, and restart and run engine for at least 3 seconds at idle speed.
4. Stop engine and reconnect mass air flow sensor harness connector.
5. Make sure 1st trip DTC No. 0102 is displayed in Diagnostic Test Mode II.
6. Erase the diagnostic test mode II (Self-diagnostic results) memory. Make sure diagnostic trouble code No. 0505 is displayed in Diagnostic Test Mode II.
7. Run engine for at least 10 minutes at idle speed.
   Is the 1st trip DTC 0114 or 0115 detected? Is it difficult to start engine?

No ↓

Disconnect and reconnect harness connectors in the circuit. Then retest.

Trouble is not fixed. ↓

Check ECM pin terminals for damage and check the connection of ECM harness connector. Reconnect ECM harness connector and retest.

NG → Replace front heated oxygen sensor.

OK ↓

INSPECTION END

Closed Loop Control

- **The closed loop control has one trip detection logic.**

Diagnostic Trouble Code No.	Malfunction is detected when ...	Check Items (Possible Cause)
P0130 0307	● The closed loop control function does not operate even when vehicle is driving in the specified condition.	● The front heated oxygen sensor circuit is open or shorted. ● Front heated oxygen sensor ● Front heated oxygen sensor heater

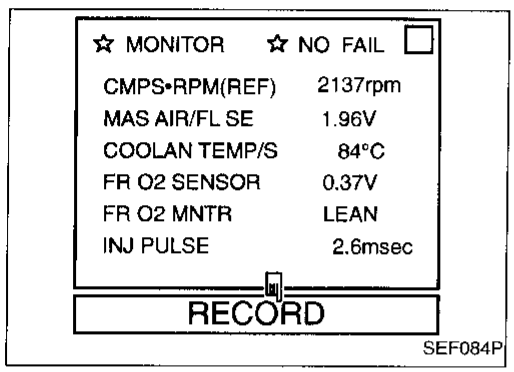

OVERALL FUNCTION CHECK

Use this procedure to check the overall function of the closed loop control. During this check, a 1st trip DTC might not be confirmed.

1) Start engine and warm it up sufficiently.
2) Select "MANU TRIG" and "HI SPEED" in "DATA MONITOR" mode with CONSULT, and select "FR O2 SENSOR" and "FR O2 MNTR".
3) Hold engine speed at 2,000 rpm under no load during the following steps.
4) Touch "RECORD" on CONSULT screen.
5) Check the following.

- "FR O2 MNTR" in "DATA MONITOR" mode changes from "RICH" to "LEAN" to "RICH" 5 times in 10 seconds.

  5 times (cycles) are counted as shown below:

cycle	1	2	3	4	5
FR O2 MNTR	R-L-R-L-R	L-R-L-R-L	R-L-R-L-R	L-R-L-R-L	R-L-R-L-R

  R = "FR O2 MNTR", "RICH"
  L = "FR O2 MNTR", "LEAN"

OR

1) Start engine and warm it up sufficiently.
2) Check that malfunction indicator lamp goes on more than 5 times in 10 seconds while keeping at 2,000 rpm in Diagnostic Test Mode II (FRONT HEATED OXYGEN SENSOR MONITOR).

DIAGNOSTIC PROCEDURE

Refer to TROUBLE DIAGNOSIS FOR DTC P0130, EC-129.
Refer to TROUBLE DIAGNOSIS FOR DTC P0135, EC-135.

Front Heated Oxygen Sensor Heater

SYSTEM DESCRIPTION

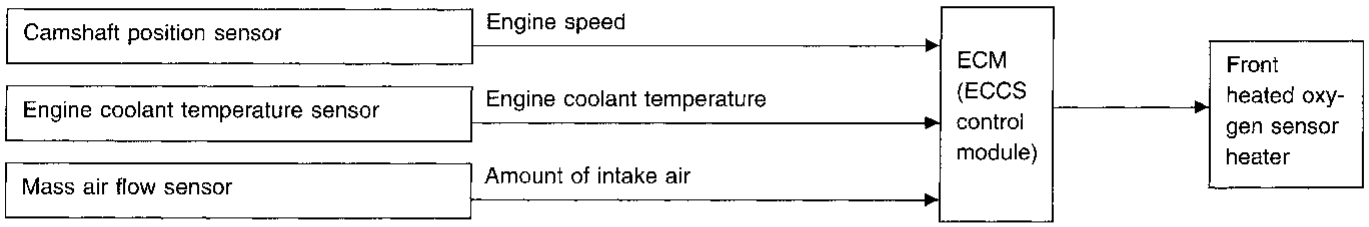

The ECM performs ON/OFF control of the front heated oxygen sensor heater corresponding to the engine conditions.

Engine speed (rpm)	Engine condition	Front heated oxygen sensor heater
Above 3,000	—	OFF
Below 3,000	Heavy load after warm-up	OFF
	Except above	ON

ECM TERMINALS AND REFERENCE VALUE

Specification data are reference values and are measured between each terminal and ㊸ (ECCS ground).

TERMINAL NO.	WIRE COLOR	ITEM	CONDITION	DATA (DC voltage)
42	W	Front heated oxygen sensor heater	Engine is running. └ Engine speed is below 3,000 rpm.	Approximately 0V
			Engine is running. └ Engine speed is above 3,000 rpm.	BATTERY VOLTAGE (11 - 14V)

CONSULT REFERENCE VALUE IN DATA MONITOR MODE

Specification data are reference values.

MONITOR ITEM	CONDITION	SPECIFICATION
FR O2 HEATER	● Engine speed: Idle	ON
	● Engine speed: Above 3,000 rpm	OFF

ON BOARD DIAGNOSIS LOGIC

Diagnostic Trouble Code No.	Malfunction is detected when	Check Items (Possible Cause)
P0135 0901	● The current amperage in the front heated oxygen sensor heater circuit is out of the normal range. (An improper voltage drop signal is sent to ECM through the front heated oxygen sensor heater.)	● Harness or connectors (The front heated oxygen sensor heater circuit is open or shorted.) ● Front heated oxygen sensor heater

Front Heated Oxygen Sensor Heater (Cont'd)

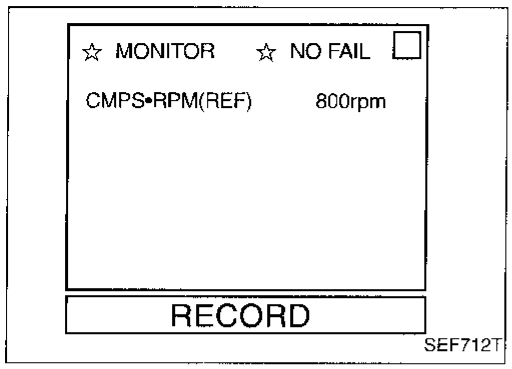

DIAGNOSTIC TROUBLE CODE CONFIRMATION PROCEDURE

1) Turn ignition switch "ON" and select "DATA MONITOR" mode with CONSULT.
2) Start engine and run it for at least 6 seconds at idle speed.

OR

1) Start engine and run it for at least 6 seconds at idle speed.
2) Turn ignition switch "OFF" and wait at least 7 seconds.
3) Start engine and run it for at least 6 seconds at idle speed.
4) Select "MODE 3" with GST.

OR

1) Start engine and run it for at least 6 seconds at idle speed.
2) Turn ignition switch "OFF", wait at least 7 seconds and then turn "ON".
3) Perform "Diagnostic Test Mode II" (Self-diagnostic results) with ECM.

- **When using GST, "DIAGNOSTIC TROUBLE CODE CONFIRMATION PROCEDURE" should be performed twice as much as when using CONSULT or ECM (Diagnostic Test Mode II) because GST cannot display MODE 7 (1st trip DTC) concerning this diagnosis. Therefore, using CONSULT or ECM (Diagnostic Test Mode II) is recommended.**

EC-FRO2/H-01

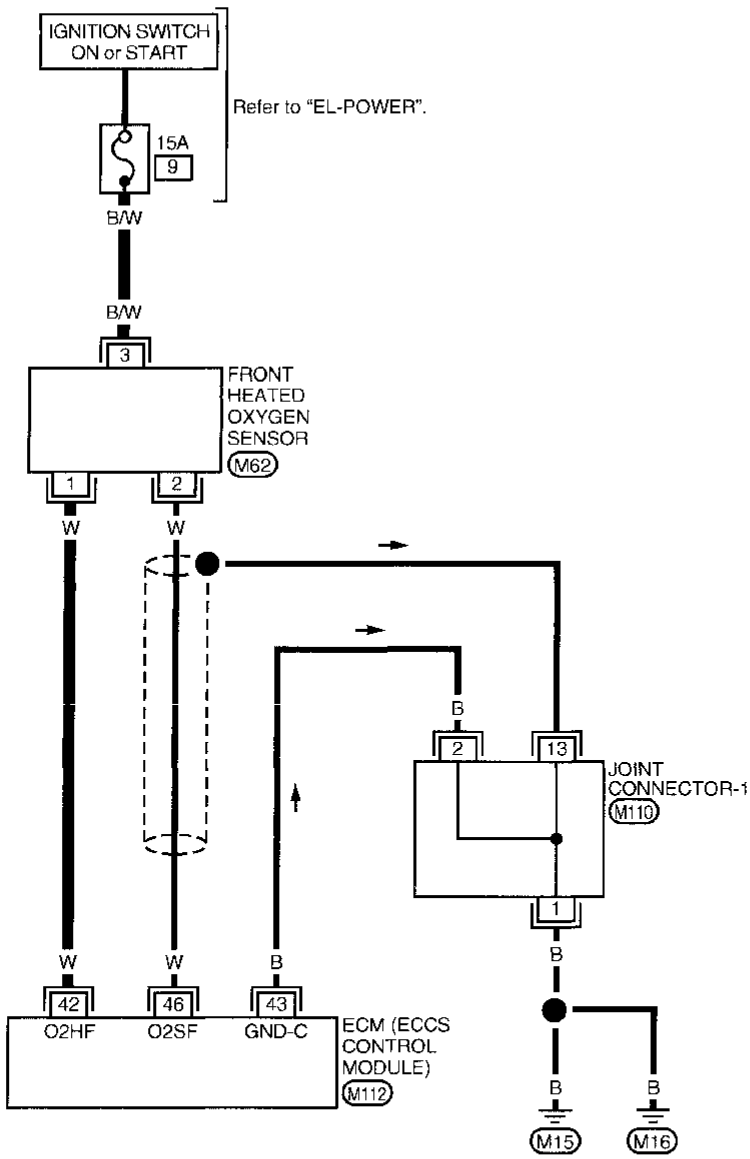

: Detectable line for DTC
: Non-detectable line for DTC

Refer to last page (Foldout page).
M110

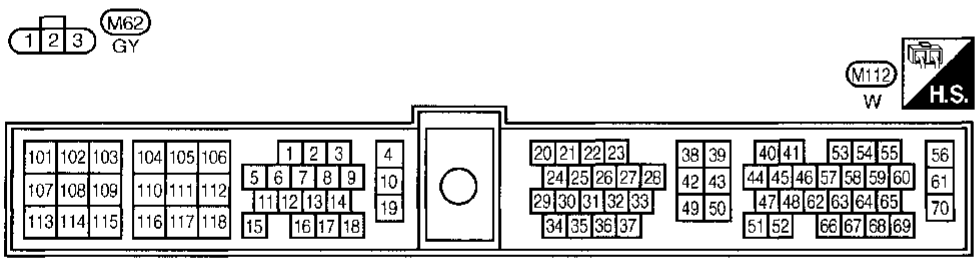

AEC305A

Front Heated Oxygen Sensor Heater (Cont'd)

DIAGNOSTIC PROCEDURE

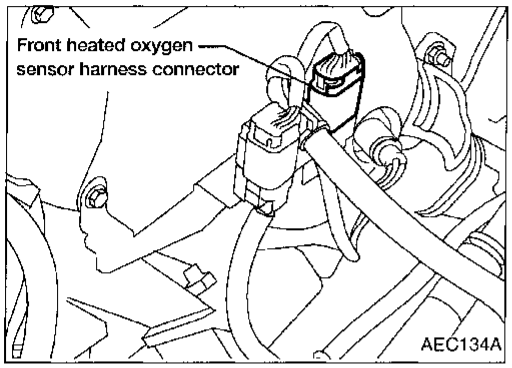

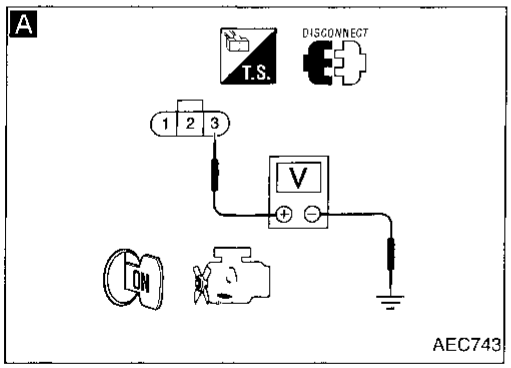

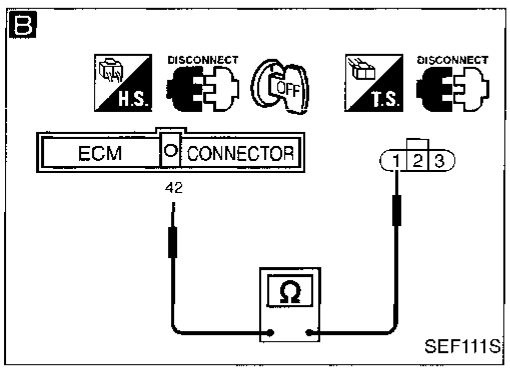

INSPECTION START

↓

A

CHECK POWER SUPPLY.
1. Disconnect front heated oxygen sensor harness connector.
2. Turn ignition switch "ON".
3. Check voltage between terminal ③ and ground.
   Voltage: Battery voltage

NG → Check the following.
- 15A fuse
- Harness for open or short between front heated oxygen sensor and fuse

If NG, repair harness or connectors.

OK ↓

B

CHECK GROUND CIRCUIT.
1. Turn ignition switch "OFF".
2. Disconnect ECM harness connector.
3. Check harness continuity between terminal ① and ECM terminal ㊷.
   Continuity should exist.
   If OK, check harness for short.

NG → Repair harness or connectors.

OK ↓

CHECK COMPONENT
(Front heated oxygen sensor heater).
Refer to "COMPONENT INSPECTION" below.

NG → Replace front heated oxygen sensor.

OK ↓

Disconnect and reconnect harness connectors in the circuit, and retest.

Trouble is not fixed. ↓

Check ECM pin terminals for damage and check the connection of ECM harness connector. Reconnect ECM harness connector and retest.

↓

INSPECTION END

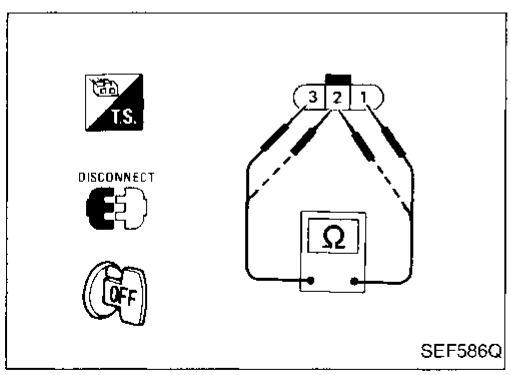

COMPONENT INSPECTION

Front heated oxygen sensor heater

Check resistance between terminals ③ and ①.

Resistance: 2.3 - 4.3Ω at 25°C (77°F)

Check continuity between terminals ② and ①, ③ and ②.

Continuity should not exist.

If NG, replace the front heated oxygen sensor.

CAUTION:

Discard any heated oxygen sensor which has been dropped from a height of more than 0.5 m (19.7 in) onto a hard surface such as a concrete floor; use a new one.

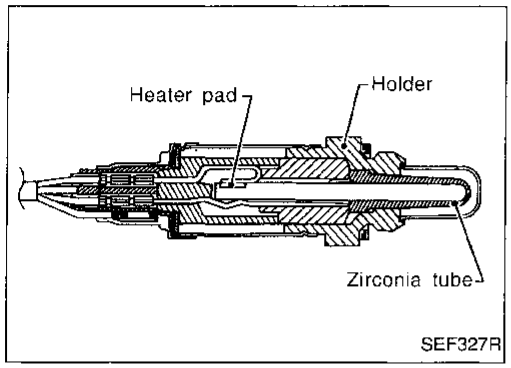

Rear Heated Oxygen Sensor (Rear HO2S)

COMPONENT DESCRIPTION

The rear heated oxygen sensor (Rear HO2S), after three way catalyst, monitors the oxygen level in the exhaust gas.
Even if switching characteristics of the front heated oxygen sensor are shifted, the air fuel ratio is controlled to stoichiometric, by the signal from the rear heated oxygen sensor.
This sensor is made of ceramic zirconia. The zirconia generates voltage from approximately 1V in richer conditions to 0V in leaner conditions.
Under normal conditions the rear heated oxygen sensor is not used for engine control operation.

ECM TERMINALS AND REFERENCE VALUE

Specification data are reference values and are measured between each terminal and ㊸ (ECCS ground).

TERMINAL NO.	WIRE COLOR	ITEM	CONDITION	DATA (DC voltage)
52	W	Rear heated oxygen sensor	Engine is running. └ After warming up sufficiently and engine speed is 2,000 rpm.	0 - Approximately 1.0V

CONSULT REFERENCE VALUE IN DATA MONITOR MODE

Specification data are reference values.

MONITOR ITEM	CONDITION		SPECIFICATION
RR O2 SENSOR	● Engine: After warming up	Maintaining engine speed at 2,000 rpm	0 - 0.3V ↔ Approx. 0.6 - 1.0V
RR O2 MNTR			LEAN ↔ RICH

ON BOARD DIAGNOSIS LOGIC

The rear heated oxygen sensor has a much longer switching time between rich and lean than the front heated oxygen sensor. The oxygen storage capacity of the three way catalyst causes the longer switching time. To judge the malfunctions of rear heated oxygen sensor, ECM monitors the sensor's voltage value and the switching response during the various driving condition such as fuel-cut.

Diagnostic Trouble Code No.	Malfunction is detected when ...	Check Items (Possible Cause)
P0136 0707	● An excessively high voltage from the sensor is sent to ECM. ● The maximum and minimum voltages from the sensor are not reached to the specified voltages. ● It takes more time for the sensor to respond between rich and lean than the specified time.	● Harness or connectors (The sensor circuit is open or shorted.) ● Rear heated oxygen sensor ● Fuel pressure ● Injectors ● Intake air leaks

Rear Heated Oxygen Sensor (Rear HO2S) (Cont'd)

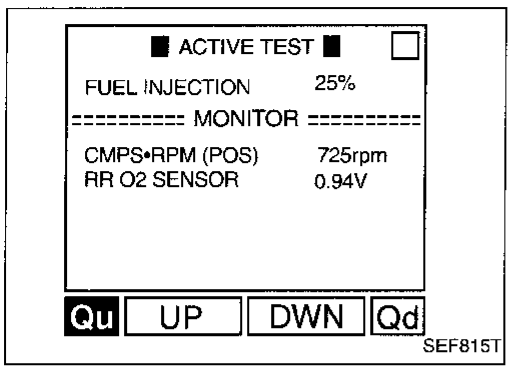

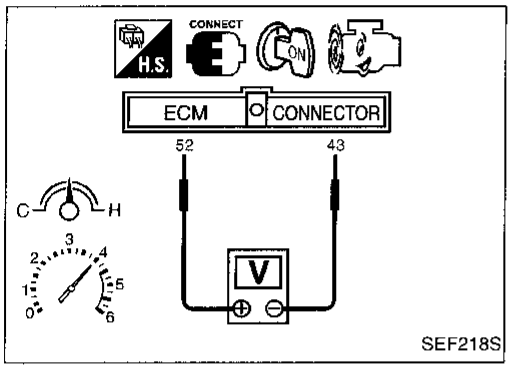

OVERALL FUNCTION CHECK

Use this procedure to check the overall function of the rear heated oxygen sensor circuit. During this check, a 1st trip DTC might not be confirmed.

1) Start engine and warm it up sufficiently.
2) Select "FUEL INJECTION" in "ACTIVE TEST" mode, and select "RR O2 SENSOR" as the monitor item with CONSULT.
3) Check "RR O2 SENSOR" at idle speed when adjusting "FUEL INJECTION" to ±25%.
   "RR O2 SENSOR" should be above 0.48V at least once when the "FUEL INJECTION" is +25%.
   "RR O2 SENSOR" should be below 0.43V at least once when the "FUEL INJECTION" is –25%.

OR

1) Start engine and warm it up sufficiently.
2) Set voltmeter probes between ECM terminals (52) (sensor signal) and (43) (engine ground).
3) Check the voltage when racing up to 4,000 rpm under no load at least 10 times.
   (depress and release accelerator pedal as soon as possible)
   The voltage should be above 0.48V and below 0.43V at least once during this procedure.
   If the voltage can be confirmed in step 3, step 4 is not necessary.
4) Keep vehicle at idling for 10 minutes, then check the voltage. Or check the voltage when coasting from 80 km/h (50 MPH) in 3rd gear position.
   The voltage should be above 0.48V and below 0.43V at least once during this procedure.

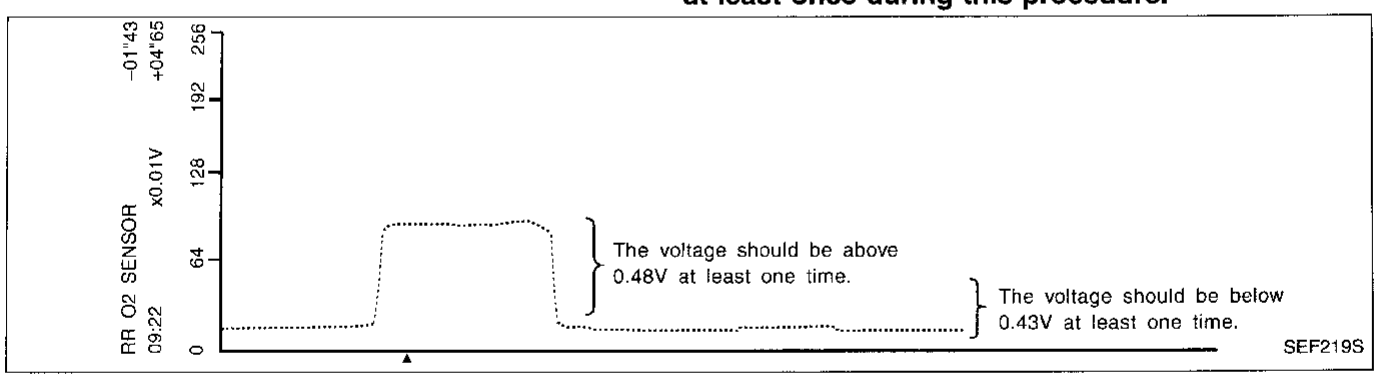

Rear Heated Oxygen Sensor (Rear HO2S) (Cont'd)

ER-RRO2-01

: Detectable line for DTC
: Non-detectable line for DTC

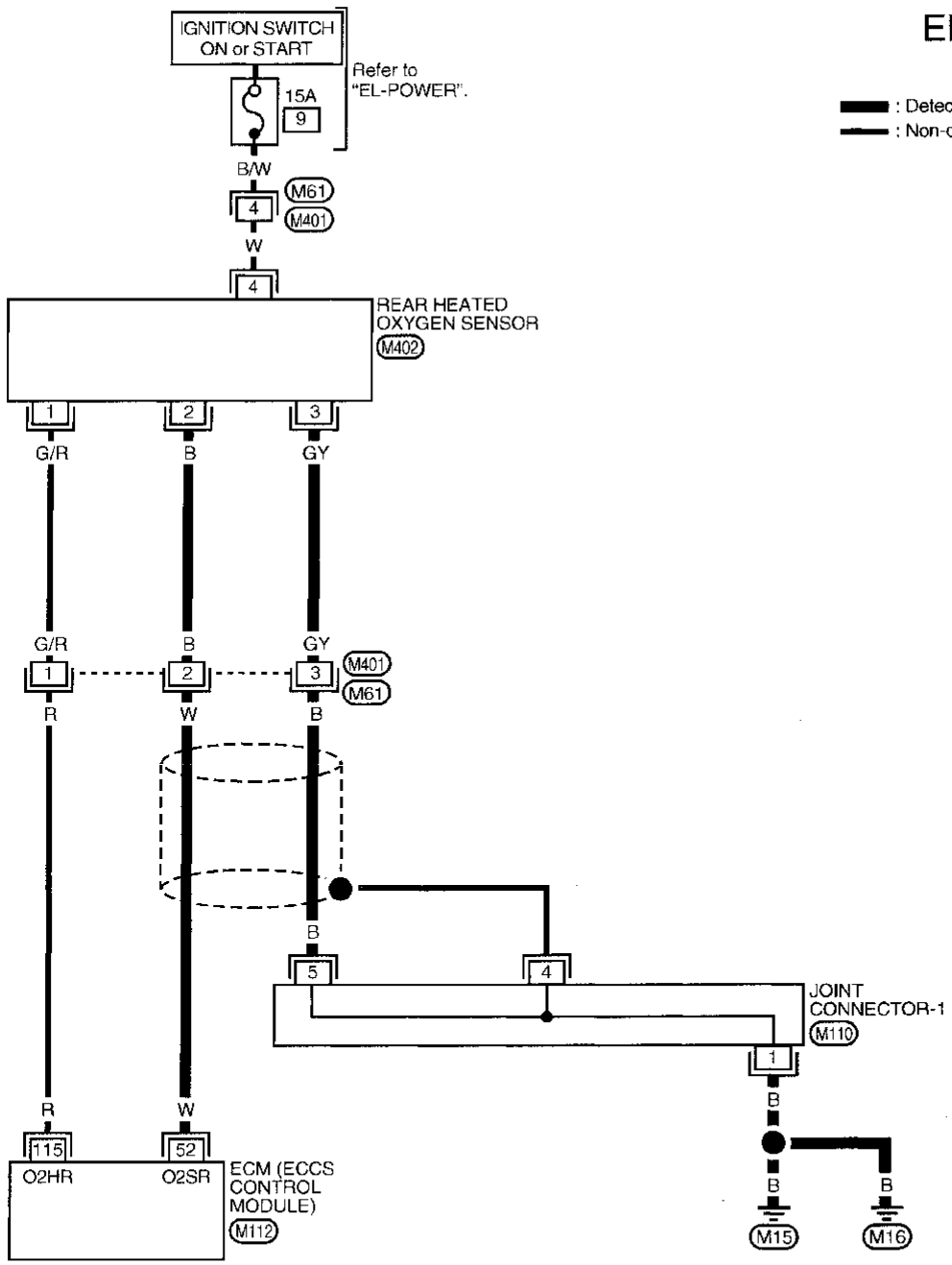

Refer to last page (Foldout page).
M110

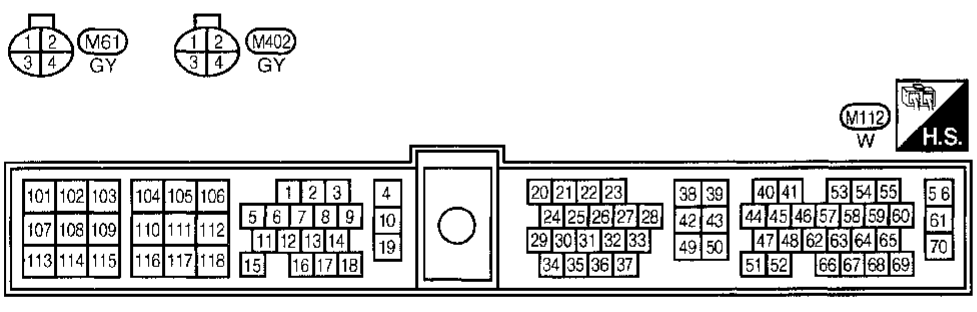

AEC306A

Rear Heated Oxygen Sensor (Rear HO2S) (Cont'd)

DIAGNOSTIC PROCEDURE

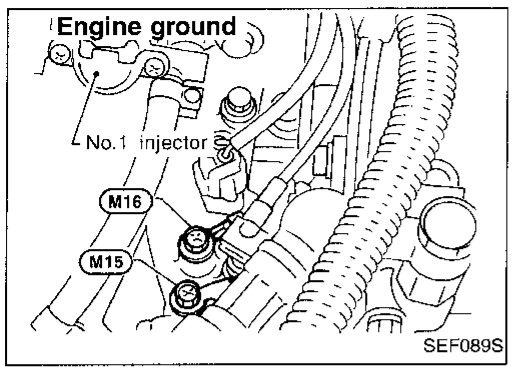

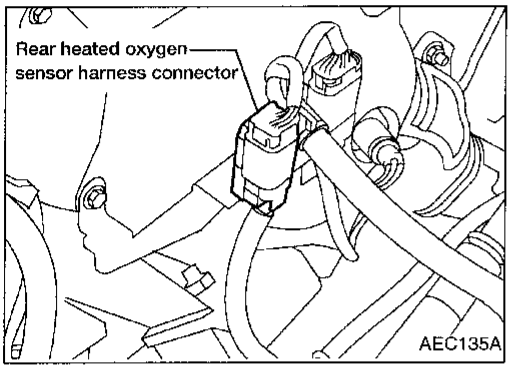

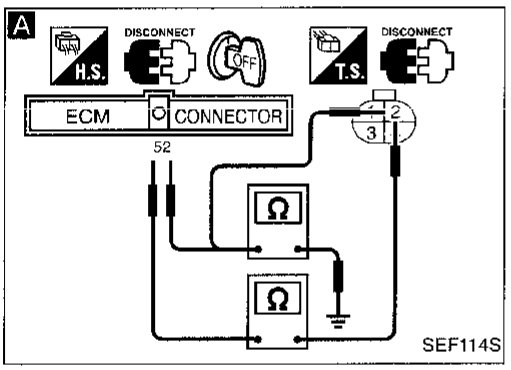

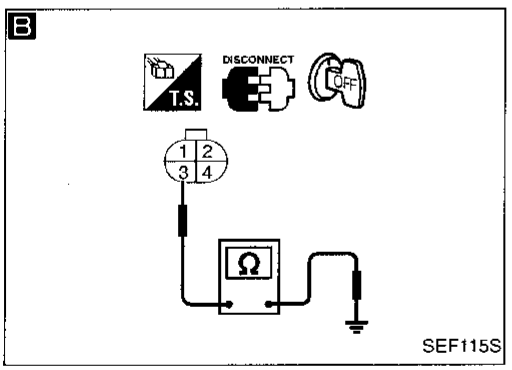

INSPECTION START

↓

CHECK SHIELD CIRCUIT.
1. Turn ignition switch "OFF".
2. Loosen and retighten engine ground screws.
3. Remove joint connector-1.
4. Check the following.
   - Continuity between joint connector-1 terminal ① and ground
   - Joint connector-1 (Refer to "HARNESS LAYOUT" in EL section.)

   Continuity should exist.
   If OK, check harness for short. Then reconnect joint connector-1.

NG → Repair harness or connectors.

OK ↓

A

CHECK INPUT SIGNAL CIRCUIT.
1. Disconnect rear heated oxygen sensor harness connector and ECM harness connector.
2. Check harness continuity between ECM terminal ㊷ and terminal ②.
   Continuity should exist.
3. Check harness continuity between ECM terminal ㊷ (or terminal ②) and ground.
   Continuity should not exist.
   If OK, check harness for short.

NG → Check the following.
- Harness connectors (M61), (M401)
- Harness for open or short between rear heated oxygen sensor and ECM

If NG, repair harness or connectors.

OK ↓

B

CHECK GROUND CIRCUIT.
Check harness continuity between terminal ③ and engine ground.
Continuity should exist.
If OK, check harness for short.

NG → Check the following.
- Harness connectors (M61), (M401)
- Joint connector-1
- Harness for open or short between rear heated oxygen sensor and engine ground

If NG, repair harness or connectors.

OK ↓

Disconnect and reconnect harness connectors in the circuit. Then retest.

Trouble is not fixed. ↓

Check ECM pin terminals for damage and check the connection of ECM harness connector. Reconnect ECM harness connector and retest.

NG → Replace rear heated oxygen sensor.

OK ↓

INSPECTION END

Rear Heated Oxygen Sensor Heater

SYSTEM DESCRIPTION

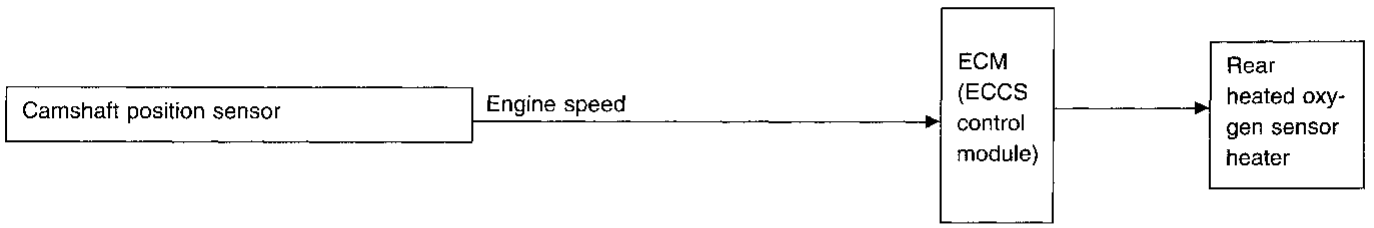

The ECM performs ON/OFF control of the rear heated oxygen sensor heater corresponding to the engine speed.

OPERATION

Engine speed rpm	Rear heated oxygen sensor heater
Above 6,000	OFF
Below 6,000	ON

ECM TERMINALS AND REFERENCE VALUE

Specification data are reference values and are measured between each terminal and ㊸ (ECCS ground).

TERMINAL NO.	WIRE COLOR	ITEM	CONDITION	DATA (DC voltage)
115	R	Rear heated oxygen sensor heater	Engine is running. └ Engine speed is below 6,000 rpm.	Approximately 0V
			Ignition switch "ON" └ Engine is stopped.	BATTERY VOLTAGE (11 - 14V)

CONSULT REFERENCE VALUE IN DATA MONITOR MODE

Specification data are reference values.

MONITOR ITEM	CONDITION	SPECIFICATION
RR O2 HEATER	• Engine speed: Below 6,000 rpm	ON
	• Ignition switch: ON (Engine stopped)	OFF

ON BOARD DIAGNOSIS LOGIC

Diagnostic Trouble Code No.	Malfunction is detected when	Check Items (Possible Cause)
P0141 0902	• The current amperage in the rear heated oxygen sensor heater circuit is out of the normal range. (An improper voltage drop signal is sent to ECM through the rear heated oxygen sensor heater.)	• Harness or connectors (The rear heated oxygen sensor heater circuit is open or shorted.) • Rear heated oxygen sensor heater

Rear Heated Oxygen Sensor Heater (Cont'd)

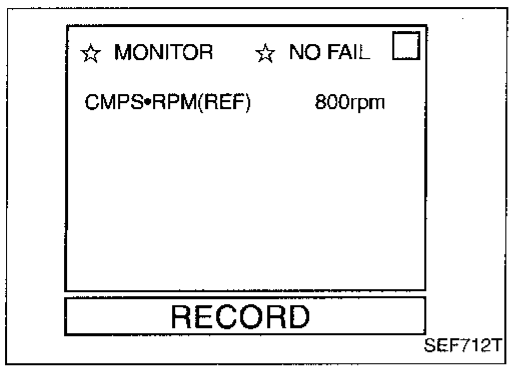

DIAGNOSTIC TROUBLE CODE CONFIRMATION PROCEDURE

1) Turn ignition switch "ON" and select "DATA MONITOR" mode with CONSULT.
2) Start engine and run it for at least 6 seconds at idle speed.

OR

1) Start engine and run it for at least 6 seconds at idle speed.
2) Turn ignition switch "OFF" and wait at least 7 seconds.
3) Start engine and run it for at least 6 seconds at idle speed.
4) Select "MODE 3" with GST.

OR

1) Start engine and run it for at least 6 seconds at idle speed.
2) Turn ignition switch "OFF", wait at least 7 seconds and then turn "ON".
3) Perform "Diagnostic Test Mode II (Self-diagnostic results)" with ECM.

- **When using GST, "DIAGNOSTIC TROUBLE CODE CONFIRMATION PROCEDURE" should be performed twice as much as when using CONSULT or ECM (Diagnostic Test Mode II) because GST cannot display MODE 7 (1st trip DTC) concerning this diagnosis. Therefore, using CONSULT or ECM (Diagnostic Test Mode II) is recommended.**

EC-RRO2/H-01

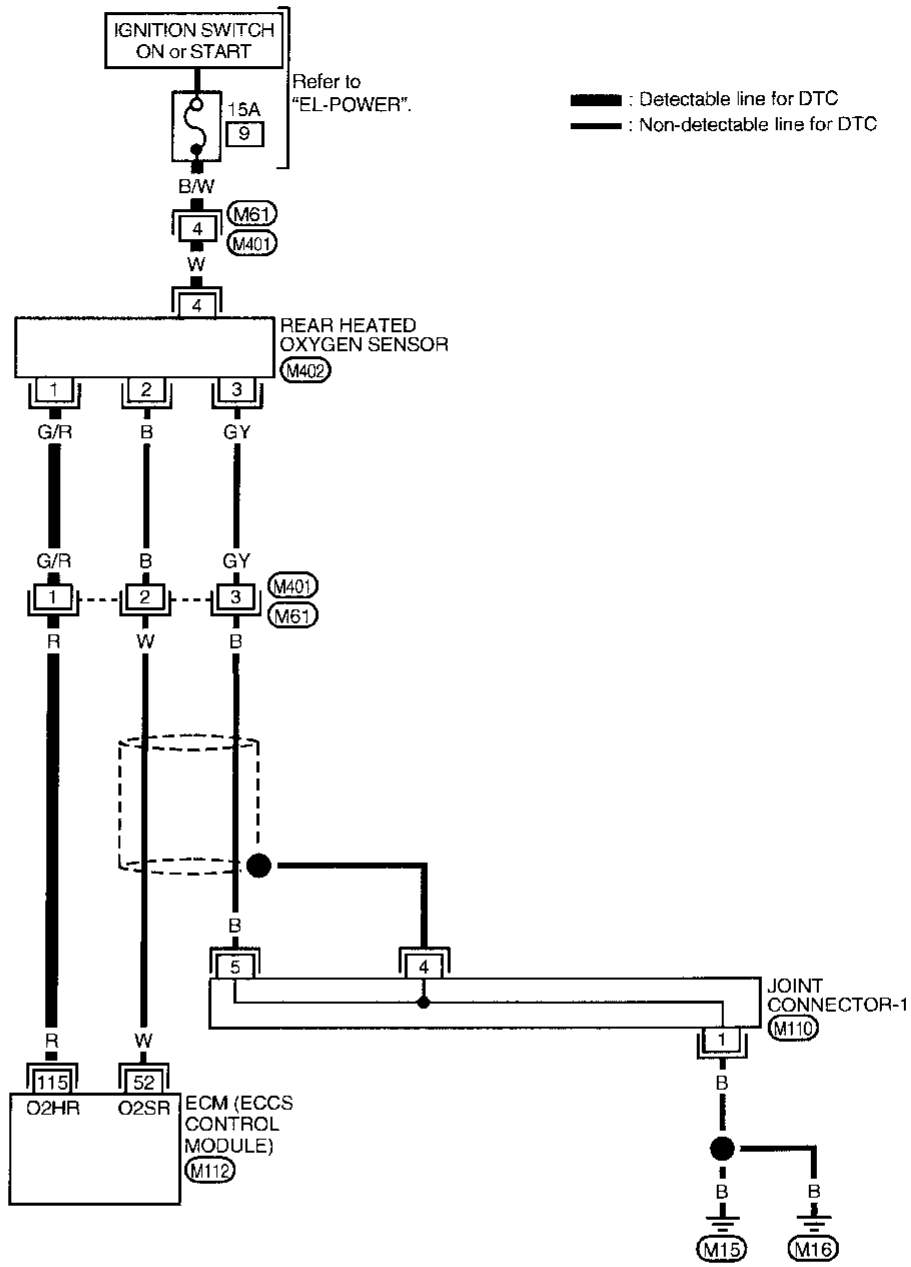

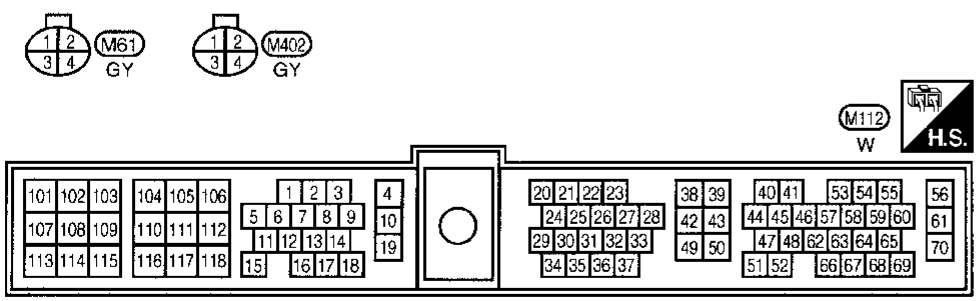

Refer to last page (Foldout page).
M110

AEC307A

Rear Heated Oxygen Sensor Heater (Cont'd)

DIAGNOSTIC PROCEDURE

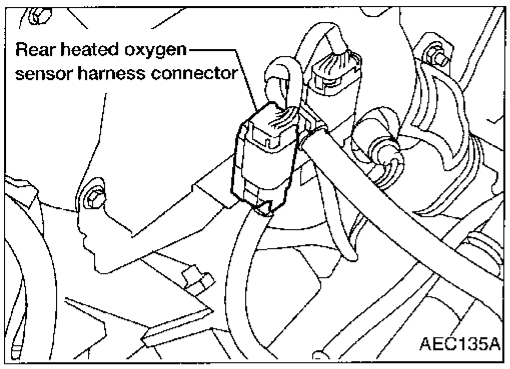

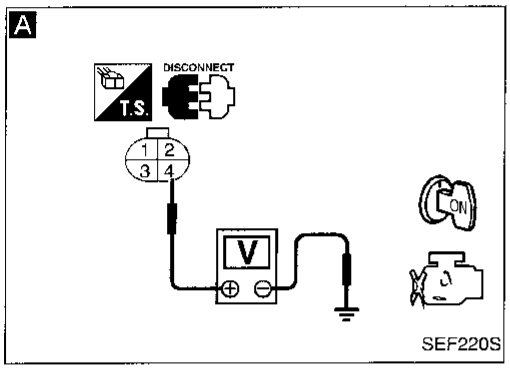

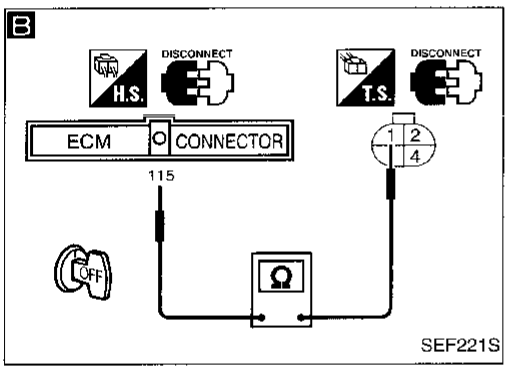

INSPECTION START

↓

A

CHECK POWER SUPPLY.
1. Turn ignition switch "OFF".
2. Disconnect rear heated oxygen sensor harness connector.
3. Turn ignition switch "ON".
4. Check voltage between terminal ④ and ground.
   Voltage: Battery voltage

NG → Check the following.
- Harness connectors (M401), (M61)
- 15A fuse
- Harness for open or short between rear heated oxygen sensor and fuse

If NG, repair harness or connectors.

OK ↓

B

CHECK GROUND CIRCUIT.
1. Turn ignition switch "OFF".
2. Disconnect ECM harness connector.
3. Check harness continuity between terminal ① and ECM terminal (115).
   Continuity should exist.
   If OK, check harness for short.

NG → Check the following.
- Harness connectors (M401), (M61)
- Harness for open or short between ECM and rear heated oxygen sensor

If NG, repair harness or connectors.

OK ↓

CHECK COMPONENT
(Rear heated oxygen sensor heater).
Refer to "COMPONENT INSPECTION" on next page.

NG → Replace rear heated oxygen sensor.

OK ↓

Disconnect and reconnect harness connectors in the circuit. Then retest.

Trouble is not fixed. ↓

Check ECM pin terminals for damage and check the connection of ECM harness connector. Reconnect ECM harness connector and retest.

↓

INSPECTION END

Rear Heated Oxygen Sensor Heater (Cont'd)

COMPONENT INSPECTION

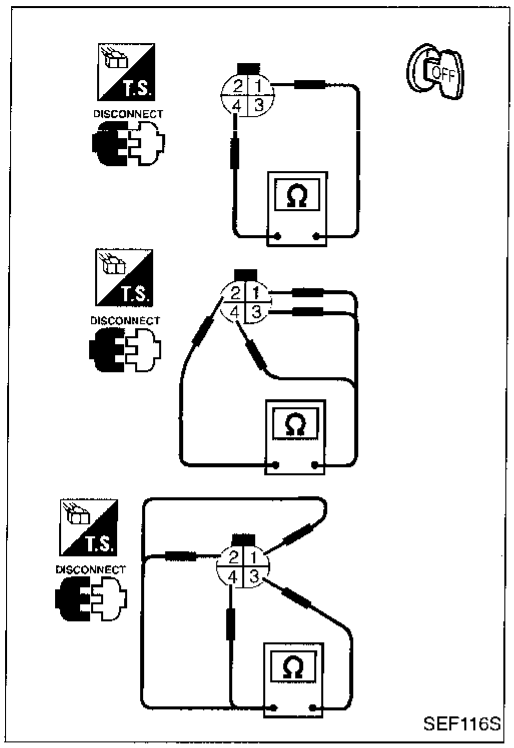

Rear heated oxygen sensor heater

Check the following.

1. Check resistance between terminals ④ and ①.
   Resistance: 11.4 - 17.4Ω at 25°C (77°F)
2. Check continuity.

Terminal No.	Continuity
② and ①, ③, ④	No
③ and ①, ②, ④	

If NG, replace the rear heated oxygen sensor.

CAUTION:

Discard any heated oxygen sensor which has been dropped from a height of more than 0.5 m (19.7 in) onto a hard surface such as a concrete floor; use a new one.

Fuel Injection System Function (Lean side)

ON BOARD DIAGNOSIS LOGIC

With Mixture Ratio Self-Learning Control, the actual mixture ratio can be brought closely to the theoretical mixture ratio based on the mixture ratio feedback signal from the front heated oxygen sensor. The ECM calculates the necessary compensation to correct the offset between the actual and the theoretical ratios.
In case the amount of the compensation value is extremely large (the actual mixture ratio is too lean), the ECM judges the condition as a fuel system malfunction and lights up the MIL (2 trip detection logic).

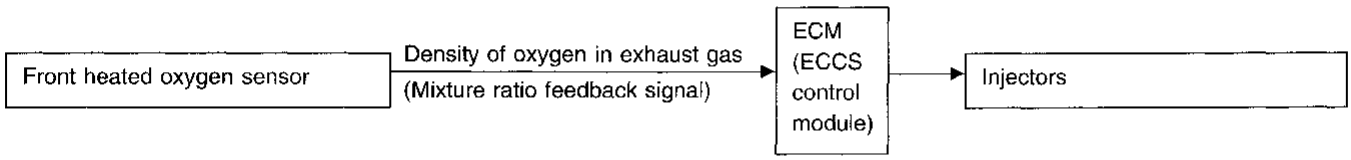

Diagnostic Trouble Code No.	Malfunction is detected when ...	Check Items (Possible Cause)
P0171 0115	• Fuel injection system does not operate properly. • The amount of mixture ratio compensation is too large. (The mixture ratio is too lean.)	• Intake air leak • Front heated oxygen sensor • Injectors • Exhaust gas leak • Incorrect fuel pressure • Lack of fuel • Mass air flow sensor

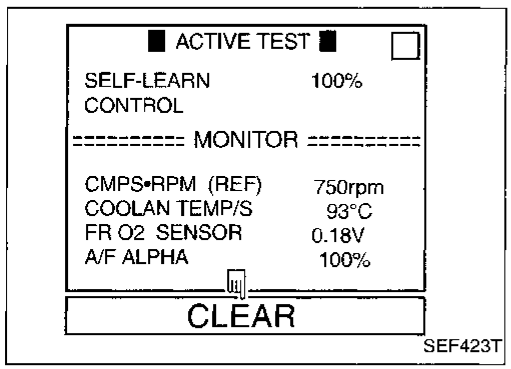

DIAGNOSTIC TROUBLE CODE CONFIRMATION PROCEDURE (Overall)

1) Start engine and warm it up sufficiently.
2) Turn ignition switch "OFF" and wait at least 7 seconds.
3) Turn ignition switch "ON" and select "SELF-LEARN CONTROL" in "ACTIVE TEST" mode with CONSULT.
4) Clear the self-learning control coefficient by touching "CLEAR".
5) Select "DATA MONITOR" mode with CONSULT.
6) Start engine again and run it for at least 10 minutes at idle speed.
   The 1st trip DTC should be detected at this stage, if a malfunction exists.
7) If it is difficult to start engine at step 6, the fuel injection system has a malfunction, too.
   Crank engine while depressing accelerator pedal. If engine starts, go to "DIAGNOSTIC PROCEDURE", EC-151. If engine does not start, check exhaust and intake air leak visually.

OR

Fuel Injection System Function (Lean side) (Cont'd)

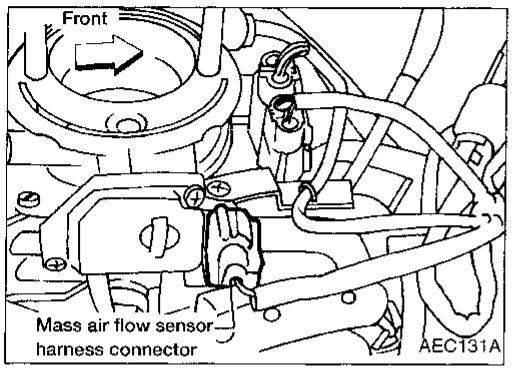

1) Start engine and warm it up sufficiently.
2) Turn ignition switch "OFF" and wait at least 7 seconds.
3) Disconnect mass air flow sensor harness connector. Then restart and run engine for at least 3 seconds at idle speed.
4) Stop engine and reconnect mass air flow sensor harness connector.
5) Select "MODE 7" with GST. Make sure 1st trip DTC P0100 is detected.
6) Select "MODE 4" with GST and erase the 1st trip DTC P0100.
7) Start engine again and run it for at least 10 minutes at idle speed.
8) Select "MODE 7" with GST. The 1st trip DTC P0171 should be detected at this stage, if a malfunction exists.
9) If it is difficult to start engine at step 8, the fuel injection system has a malfunction.
   Crank engine while depressing accelerator pedal. If engine starts, go to "DIAGNOSTIC PROCEDURE", EC-151. If engine does not start, check exhaust and intake air leak visually.

OR

1) Start engine and warm it up sufficiently.
2) Turn ignition switch "OFF" and wait at least 7 seconds.
3) Disconnect mass air flow sensor harness connector.
4) Start engine and run it for at least 3 seconds at idle speed.
5) Stop engine and reconnect mass air flow sensor harness connector.
6) Turn ignition switch "ON".
7) Perform Diagnostic Test Mode II (Self-diagnostic results) with ECM. Make sure 1st trip DTC 0102 is detected.
8) Erase the 1st trip DTC 0102 by changing from Diagnostic Test Mode II to Diagnostic Test Mode I.
9) Perform Diagnostic Test Mode II (Self-diagnostic results) with ECM. Make sure DTC 0505 is detected.
10) Start engine again and run it for at least 10 minutes at idle speed.
    The 1st trip DTC 0115 should be detected at this stage, if a malfunction exists.
11) If it is difficult to start engine at step 10, the fuel injection system also has a malfunction.
    Crank engine while depressing accelerator pedal. If engine starts, go to "DIAGNOSTIC PROCEDURE", EC-151. If engine does not start, check exhaust and intake air leak visually.

Fuel Injection System Function (Lean side) (Cont'd)

EC-FUEL-01

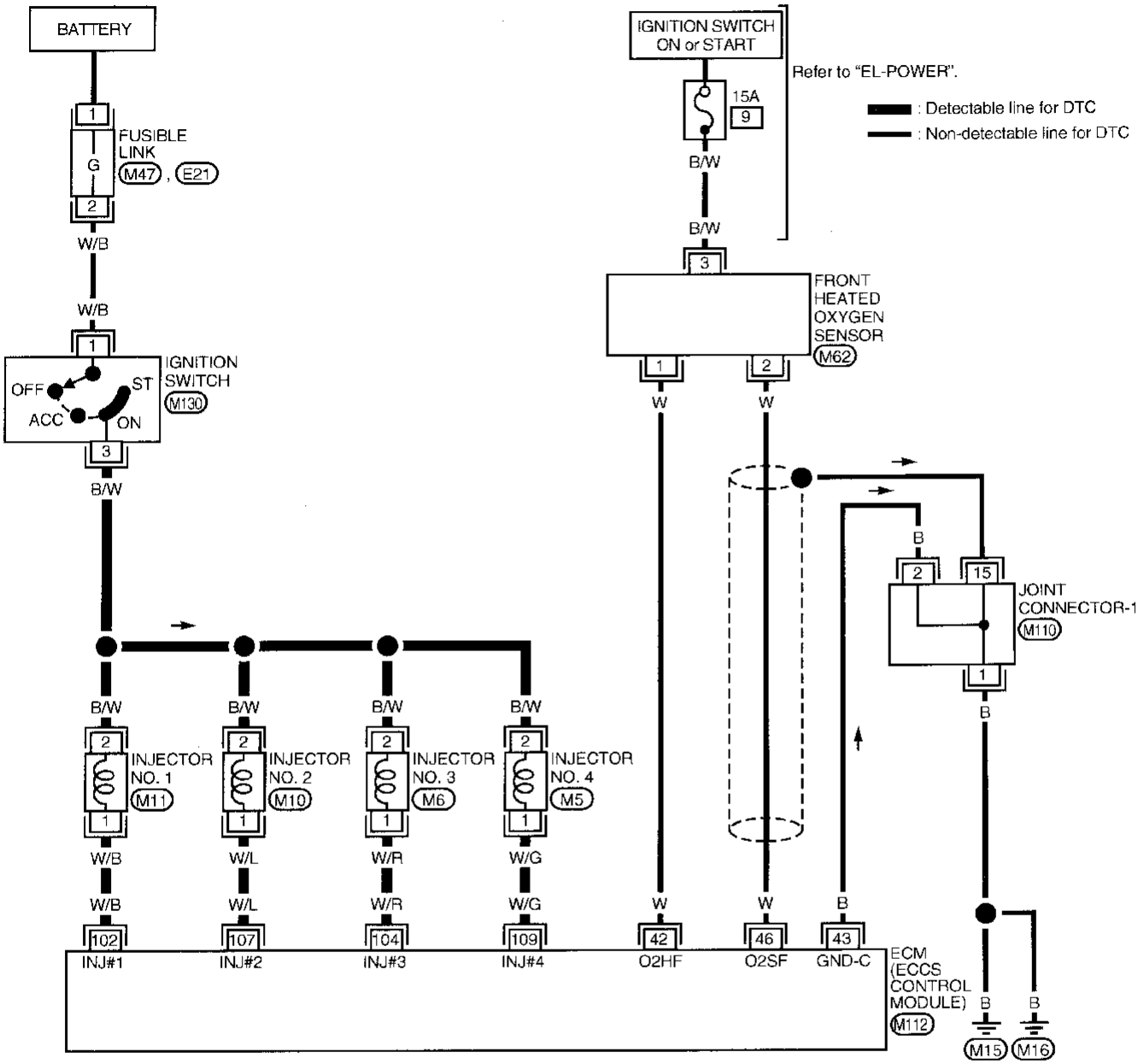

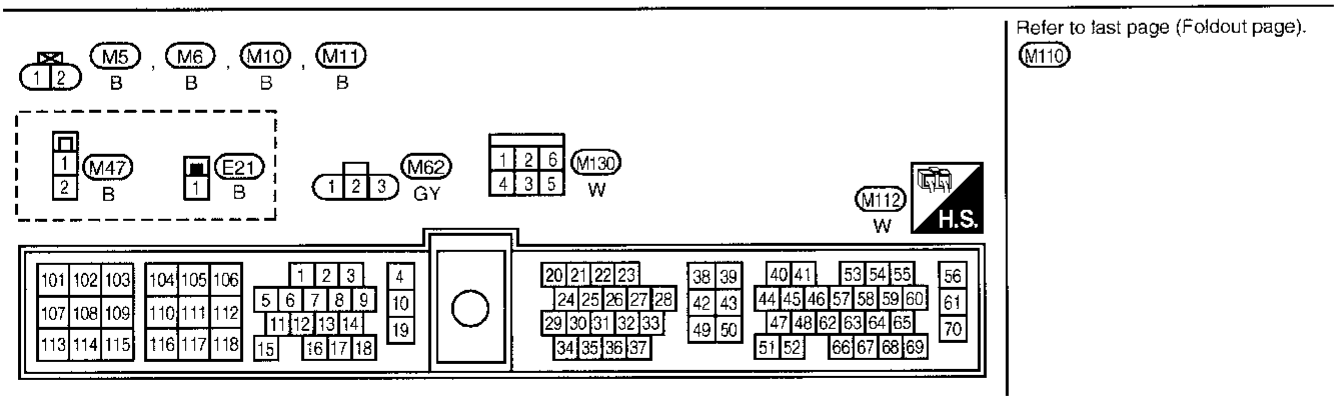

AEC308A

Fuel Injection System Function (Lean side) (Cont'd)

DIAGNOSTIC PROCEDURE

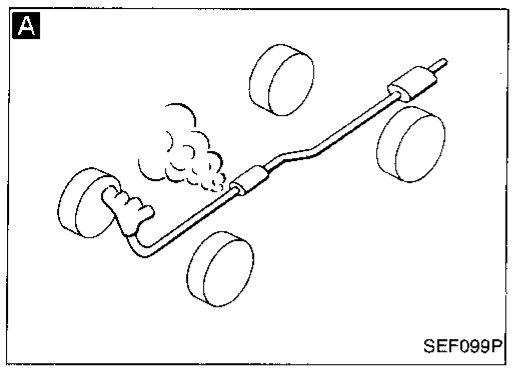

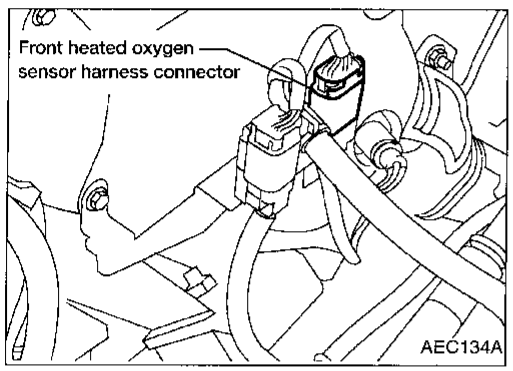

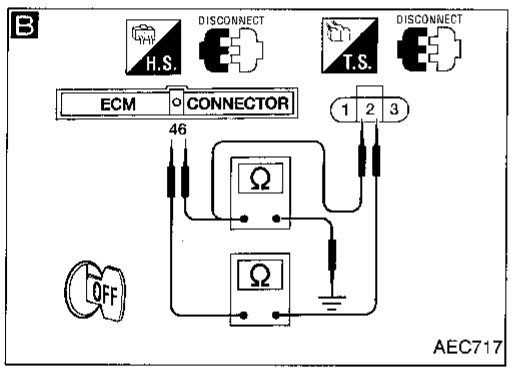

INSPECTION START

↓

A

CHECK EXHAUST AIR LEAK.
Start engine and run it at idle. Listen for an exhaust air leak before the three way catalyst.

NG → Repair or replace.

↓ OK

CHECK INTAKE AIR LEAK.
Start engine and run it at idle. Listen for an intake air leak after the mass air flow sensor.

NG → Repair or replace.

↓ OK

B

CHECK FRONT HEATED OXYGEN SENSOR.
1. Turn ignition switch "OFF".
2. Disconnect front heated oxygen sensor harness connector and ECM harness connector.
3. Check harness continuity between ECM terminal (46) and terminal (2).
   Continuity should exist.
4. Check harness continuity between ECM terminal (46) (or terminal (2)) and ground.
   Continuity should not exist.
   If OK, check harness for short.

NG → Repair harness or connectors.

↓ OK

CHECK FUEL PRESSURE.
1. Release fuel pressure to zero.
   Refer to page EC-25.
2. Install fuel pressure gauge and check fuel pressure.
   At idle:
   Approx. 235 kPa
   (2.4 kg/cm^2, 34 psi)
   A few seconds after ignition switch is turned OFF to ON:
   Approx. 294 kPa
   (3.0 kg/cm^2, 43 psi)

NG → Check fuel pump and circuit. Refer to EC-309.

↓ OK

CHECK MASS AIR FLOW SENSOR.
Check "MASS AIR FLOW" in "DATA MONITOR" mode with CONSULT.
1.8 - 6.5 g·m/sec: at idling (2WD)
2.1 - 6.0 g·m/sec: at idling (4WD)
7.7 - 15.0 g·m/sec: at 2,500 rpm (2WD)
6.8 - 13.3 g·m/sec: at 2,500 rpm (4WD)

OR

Check "mass air flow" in MODE 1 with GST.
1.8 - 6.5 g·m/sec: at idling (2WD)
2.1 - 6.0 g·m/sec: at idling (4WD)
7.7 - 15.0 g·m/sec: at 2,500 rpm (2WD)
6.8 - 13.3 g·m/sec: at 2,500 rpm (4WD)

NG → Check connectors for rusted terminals or loose connections in the mass air flow sensor circuit or engine grounds.
Refer to EC-93.

↓ OK

(A)
(Go to next page.)

Fuel Injection System Function (Lean side) (Cont'd)

C

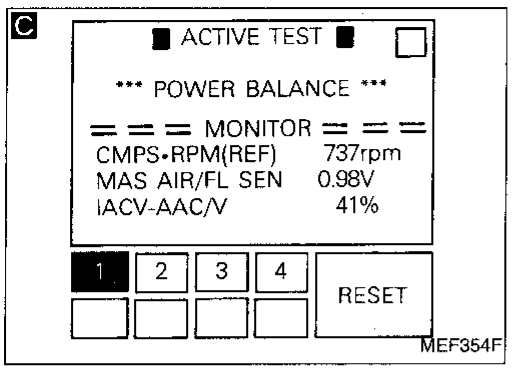

C

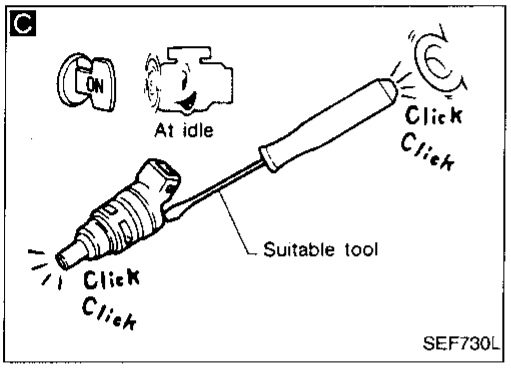

D

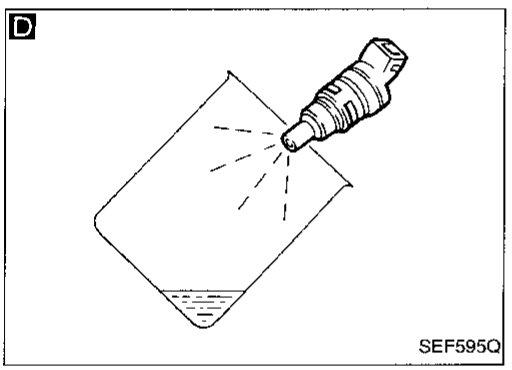

Ⓐ

C

CHECK FUNCTION OF INJECTORS.
1. Install all parts removed.
2. Start engine.
3. Perform "POWER BALANCE" in "ACTIVE TEST" mode with CONSULT.
4. Make sure that each circuit produces a momentary engine speed drop.

OR

3. Listen to each injector operating sound.
Clicking noise should be heard.

NG → Perform TROUBLE DIAGNOSIS FOR NON-DETECTABLE ITEMS, "Injectors", EC-303. Repair harness or connectors.

OK ↓

Confirm that the engine is cooled down and there are no fire hazards near the vehicle.

D

1. Turn ignition switch "OFF".
2. Remove injector assembly.
Refer to EC-26.
Keep fuel hose and all injectors connected to injector gallery.

1. Disconnect ignition coil harness connector.
2. Crank engine for about 3 seconds. Make sure that fuel sprays out from injectors.

NG → Replace injectors from which fuel does not spray out.

OK ↓

Check ECM pin terminals for damage and check the connection of ECM harness connector. Reconnect ECM harness connector and retest.

INSPECTION END

Fuel Injection System Function (Rich side)

ON BOARD DIAGNOSIS LOGIC

With Mixture Ratio Self-Learning Control, the actual mixture ratio can be brought closely to the theoretical mixture ratio based on the mixture ratio feedback signal from the front heated oxygen sensor. The ECM calculates the necessary compensation to correct the offset between the actual and the theoretical ratios.
In case the amount of the compensation value is extremely large (the actual mixture ratio is too rich), the ECM judges the condition as a fuel system malfunction and lights up the MIL (2 trip detection logic).

Front heated oxygen sensor → Density of oxygen in exhaust gas (Mixture ratio feedback signal) → ECM (ECCS control module) → Injectors

Diagnostic Trouble Code No.	Malfunction is detected when ...	Check Items (Possible Cause)
P0172 0114	• Fuel injection system does not operate properly. • The amount of mixture ratio compensation is too large. (The mixture ratio is too rich.)	• Front heated oxygen sensor • Injectors • Exhaust gas leak • Incorrect fuel pressure • Mass air flow sensor

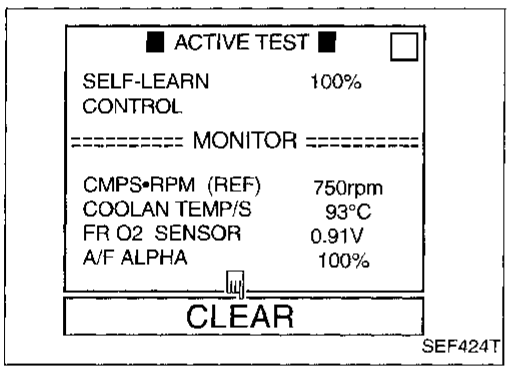

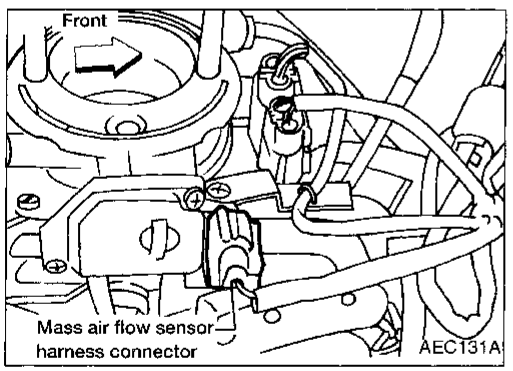

DIAGNOSTIC TROUBLE CODE CONFIRMATION PROCEDURE (Overall)

1) Start engine and warm it up sufficiently.
2) Turn ignition switch "OFF" and wait at least 7 seconds.
3) Turn ignition switch "ON" and select "SELF-LEARN CONTROL" in "ACTIVE TEST" mode with CONSULT.
4) Clear the self-learning control coefficient by touching "CLEAR".
5) Select "DATA MONITOR" mode with CONSULT.
6) Start engine again and run it for at least 10 minutes at idle speed.
   The 1st trip DTC P0172 should be detected at this stage, if a malfunction exists.
7) If it is difficult to start engine at step 6, the fuel injection system has a malfunction, too.
   Crank engine while depressing accelerator pedal. If engine starts, go to "DIAGNOSTIC PROCEDURE", EC-156. If engine does not start, remove ignition plugs and check for fouling, etc.

OR

1) Start engine and warm it up sufficiently.
2) Turn ignition switch "OFF" and wait at least 7 seconds.
3) Disconnect mass air flow sensor harness connector. Then restart and run engine for at least 3 seconds at idle speed.
4) Stop engine and reconnect mass air flow sensor harness connector.
5) Select "MODE 7" with GST. Make sure 1st trip DTC P0100 is detected.
6) Select "MODE 4" with GST and erase the 1st trip DTC P0100.
7) Start engine again and run it for at least 10 minutes at idle speed.
8) Select "MODE 7" with GST. The 1st trip DTC P0172 should be detected at this stage, if a malfunction exists.

Fuel Injection System Function (Rich side) (Cont'd)

9) If it is difficult to start engine at step 8, the fuel injection system has a malfunction.
   Crank engine while depressing accelerator pedal. If engine starts, go to "DIAGNOSTIC PROCEDURE", EC-156. If engine does not start, remove ignition plugs and check for fouling, etc.

OR

1) Start engine and warm it up sufficiently.
2) Turn ignition switch "OFF" and wait at least 7 seconds.
3) Disconnect mass air flow sensor harness connector.
4) Start engine and run it for at least 3 seconds at idle speed.
5) Stop engine and reconnect mass air flow sensor harness connector.
6) Turn ignition switch "ON".
7) Perform Diagnostic Test Mode II (Self-diagnostic results) with ECM. Make sure 1st trip DTC 0102 is detected.
8) Erase the 1st trip DTC 0102 by changing from Diagnostic Test Mode II to Diagnostic Test Mode I.
9) Perform Diagnostic Test Mode II (Self-diagnostic results) with ECM. Make sure DTC 0505 is detected.
10) Start engine again and run it for at least 10 minutes at idle speed.
    The 1st trip DTC 0114 should be detected at this stage, if a malfunction exists.
11) If it is difficult to start engine at step 10, the fuel injection system also has a malfunction.
    Crank engine while depressing accelerator pedal. If engine starts, go to "DIAGNOSTIC PROCEDURE", EC-156. If engine does not start, remove ignition plugs and check for fouling, etc.

Fuel Injection System Function (Rich side) (Cont'd)

EC-FUEL-01

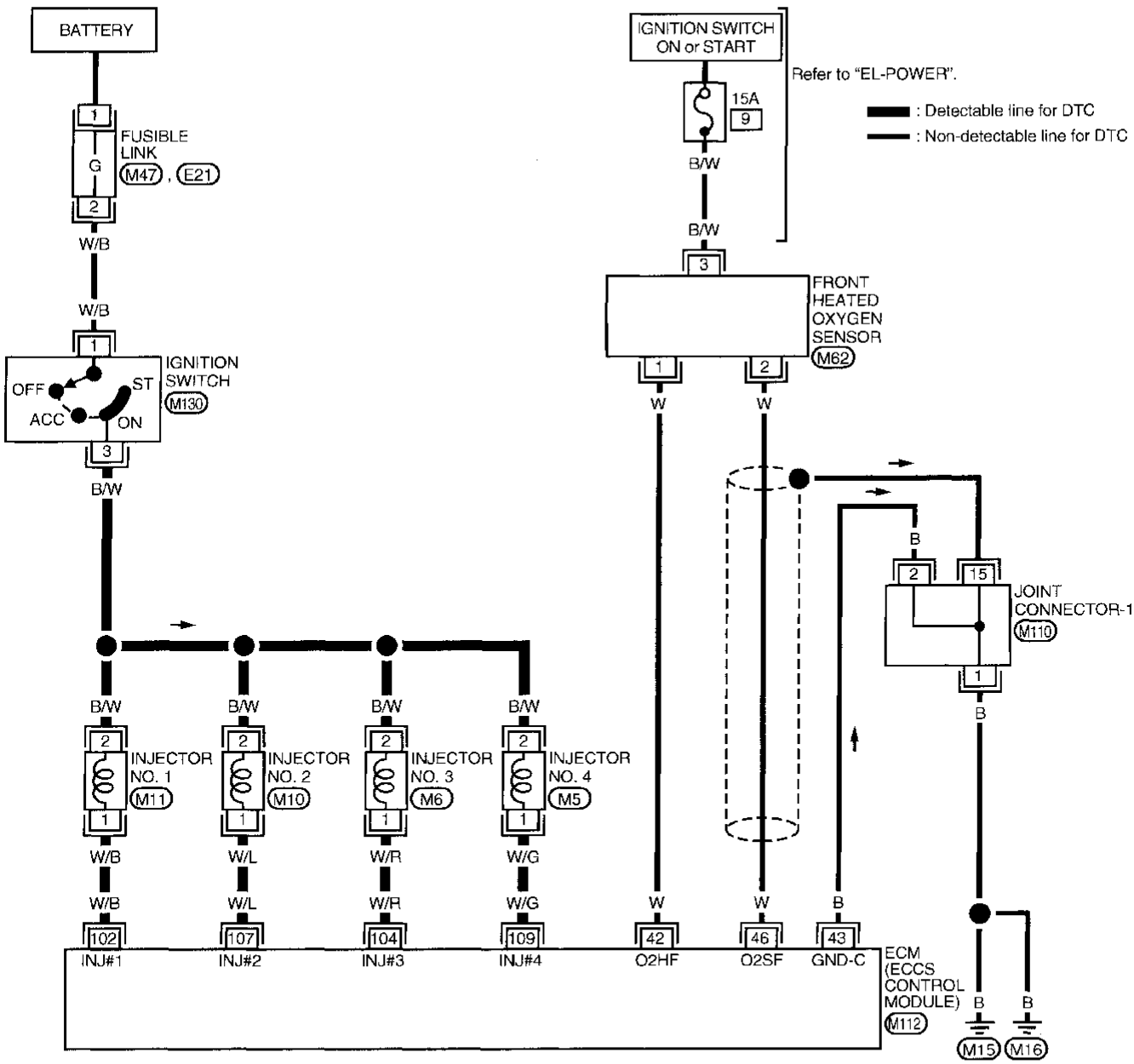

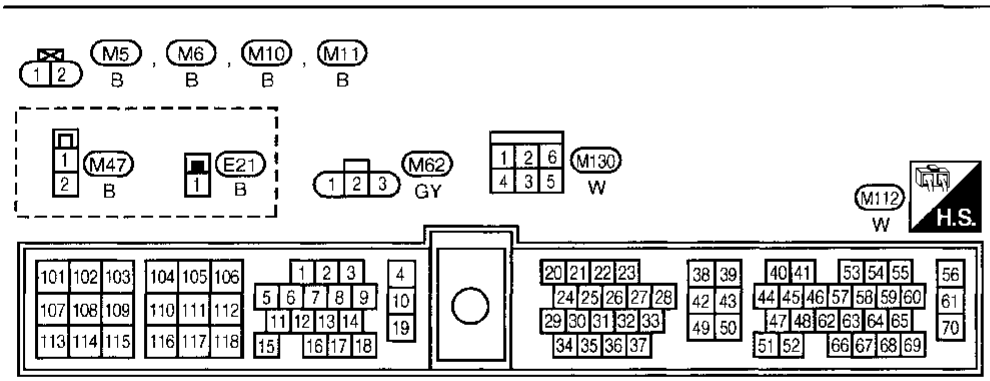

Refer to last page (Foldout page).
M110

AEC308A

Fuel Injection System Function (Rich side) (Cont'd)

DIAGNOSTIC PROCEDURE

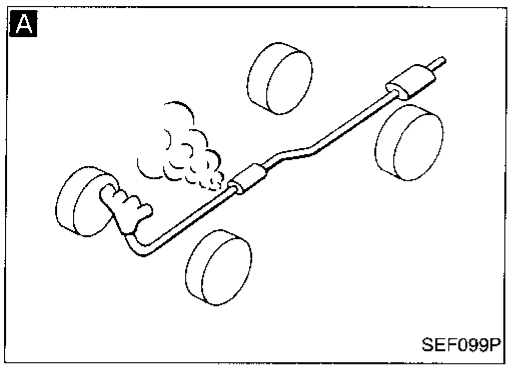

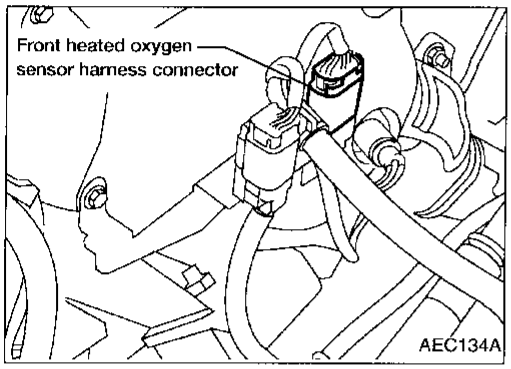

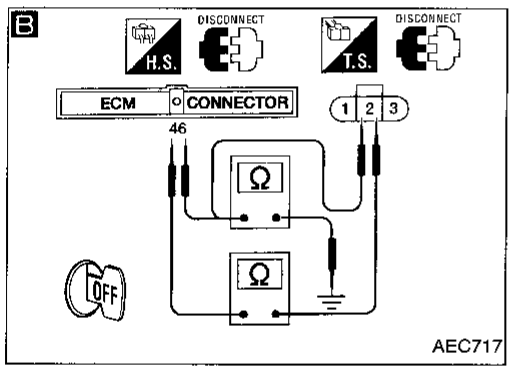

INSPECTION START

↓

A

CHECK EXHAUST AIR LEAK.
Start engine and run it at idle. Listen for an exhaust air leak before three way catalyst.

NG → Repair or replace.

↓ OK

CHECK INTAKE AIR LEAK.
Start engine and run it at idle. Listen for an intake air leak after mass air flow sensor.

NG → Repair or replace.

↓ OK

B

CHECK FRONT HEATED OXYGEN SENSOR.
1. Turn ignition switch "OFF".
2. Disconnect front heated oxygen sensor harness connector and ECM harness connector.
3. Check harness continuity between ECM terminal (46) and terminal (2).
   Continuity should exist.
4. Check harness continuity between ECM terminal (46) (or terminal (2)) and ground.
   Continuity should not exist.
   If OK, check harness for short.

NG → Repair harness or connectors.

↓ OK

CHECK FUEL PRESSURE.
1. Release fuel pressure to zero.
   Refer to page EC-25.
2. Install fuel pressure gauge and check fuel pressure.
   At idle:
   Approx. 235 kPa
   (2.4 kg/cm^2, 34 psi)
   A few seconds after ignition switch is turned OFF to ON:
   Approx. 294 kPa
   (3.0 kg/cm^2, 43 psi)

NG → Check fuel pump and circuit. Refer to EC-309.

↓ OK

CHECK MASS AIR FLOW SENSOR.
Check "MASS AIR FLOW" in "DATA MONITOR" mode with CONSULT.
1.8 - 6.5 g·m/sec: at idling (2WD)
2.1 - 6.0 g·m/sec: at idling (4WD)
7.7 - 15.0 g·m/sec: at 2,500 rpm (2WD)
6.8 - 13.3 g·m/sec: at 2,500 rpm (4WD)

OR

Check "mass air flow" in MODE 1 with GST.
1.8 - 6.5 g·m/sec: at idling (2WD)
2.1 - 6.0 g·m/sec: at idling (4WD)
7.7 - 15.0 g·m/sec: at 2,500 rpm (2WD)
6.8 - 13.3 g·m/sec: at 2,500 rpm (4WD)

NG → Check connectors for rusted terminals or loose connections in the mass air flow sensor circuit or engine grounds.
Refer to EC-93.

↓ OK

(A)
(Go to next page.)

Fuel Injection System Function (Rich side) (Cont'd)

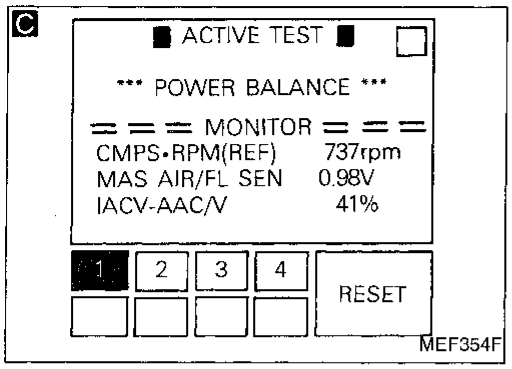

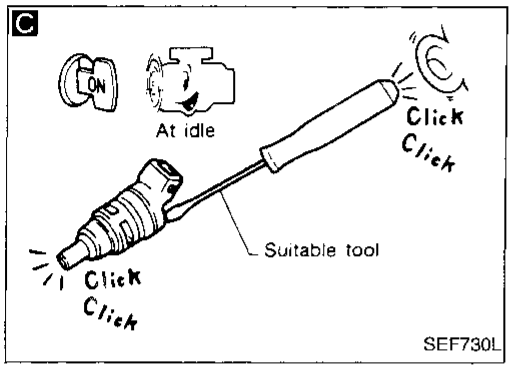

Ⓐ

CHECK FUNCTION OF INJECTORS.
1. Install all parts removed.
2. Start engine.
3. Perform "POWER BALANCE" in "ACTIVE TEST" mode with CONSULT.
4. Make sure that each circuit produces a momentary engine speed drop.

OR

3. Listen to each injector operating sound.
Clicking noise should be heard.

NG → Perform TROUBLE DIAGNOSIS FOR NON-DETECTABLE ITEMS, "Injectors", EC-303. Repair harness or connectors.

OK ↓

1. Turn ignition switch "OFF".
2. Remove injector assembly. Refer to EC-26. Keep fuel hose and all injectors connected to injector gallery.

↓

Confirm that the engine is cooled down and there are no fire hazards near the vehicle.

↓

1. Disconnect all injector harness connectors.
2. Disconnect ignition coil harness connector.
3. Crank engine for about 3 seconds. Make sure fuel does not drip from injector.

Drips → Replace the injectors from which fuel is dripping.

Does not drip. ↓

Check ECM pin terminals for damage and check the connection of ECM harness connector. Reconnect ECM harness connector and retest.

↓

INSPECTION END

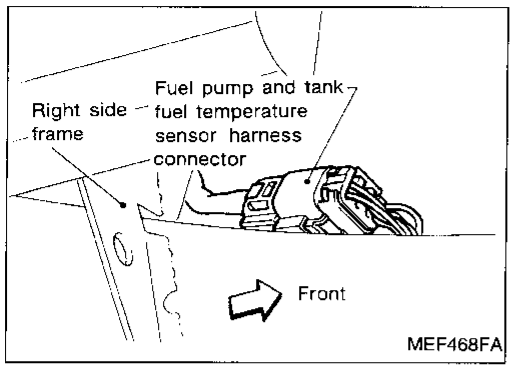

Tank Fuel Temperature Sensor

COMPONENT DESCRIPTION

The tank fuel temperature sensor is used to detect the fuel temperature inside the fuel tank. The sensor modifies a voltage signal from the ECM. The modified signal returns to the ECM as the fuel temperature input. The sensor uses a thermistor which is sensitive to the change in temperature. The electrical resistance of the thermistor decreases as temperature increases.

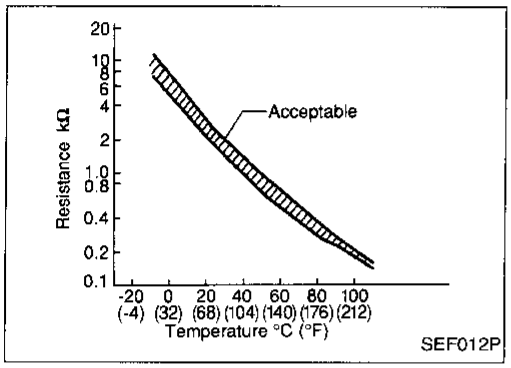

⟨Reference data⟩

Fluid temperature °C (°F)	Voltage* (V)	Resistance (kΩ)
20 (68)	3.5	2.3 - 2.7
50 (122)	2.2	0.79 - 0.90

*: These data are reference values and measured between ECM terminal 63 (Tank fuel temperature sensor) and ECM terminal 43 (ECCS ground).

ON BOARD DIAGNOSIS LOGIC

Diagnostic Trouble Code No.	Malfunction is detected when ...	Check Items (Possible Causes)
P0180 0402	• An excessively high or low voltage is sent to ECM. • Rationally incorrect voltage is sent to ECM, compared with the voltage signals from engine coolant temperature sensor and intake air temperature sensor.	• Harness or connectors (The sensor circuit is open or shorted.) • Tank fuel temperature sensor

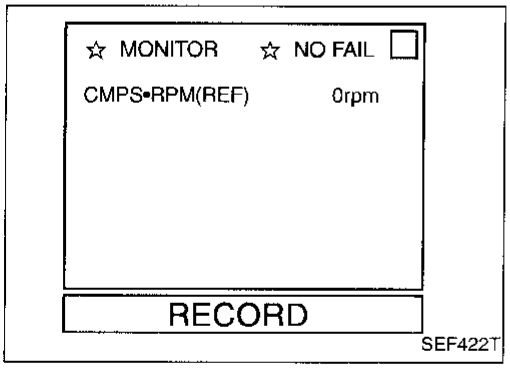

DIAGNOSTIC TROUBLE CODE CONFIRMATION PROCEDURE

1) Turn ignition switch "ON".
2) Select "DATA MONITOR" mode with CONSULT.
3) Wait at least 12 seconds.

OR

1) Turn ignition switch "ON" and wait at least 12 seconds.
2) Select "MODE 7" with GST.

OR

1) Turn ignition switch "ON" and wait at least 12 seconds.
2) Turn ignition switch "OFF", wait at least 7 seconds and then turn "ON".
3) Perform "Diagnostic Test Mode II (Self-diagnostic results)" with ECM.

EC-TFTS-01

: Detectable line for DTC
: Non-detectable line for DTC

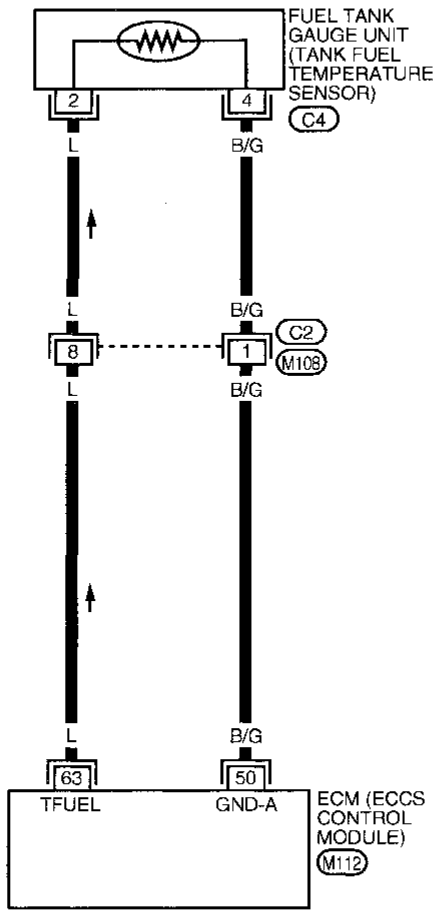

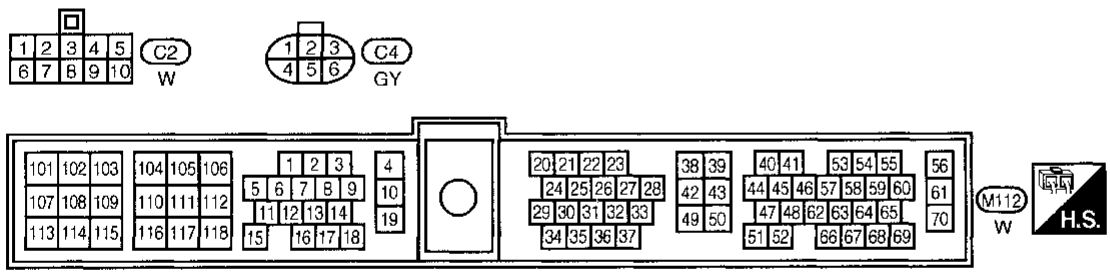

AEC049A

Tank Fuel Temperature Sensor (Cont'd)

DIAGNOSTIC PROCEDURE

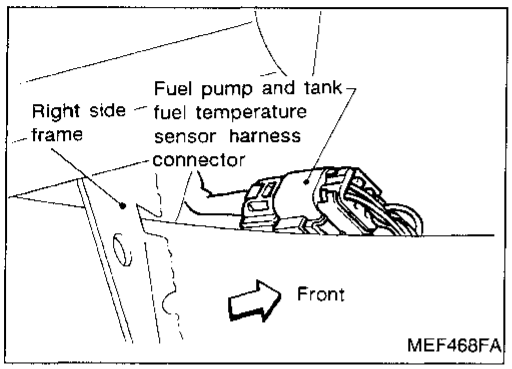

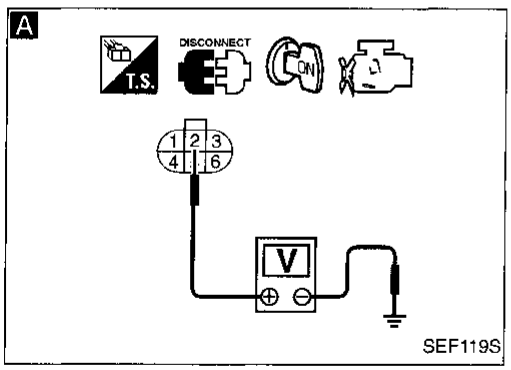

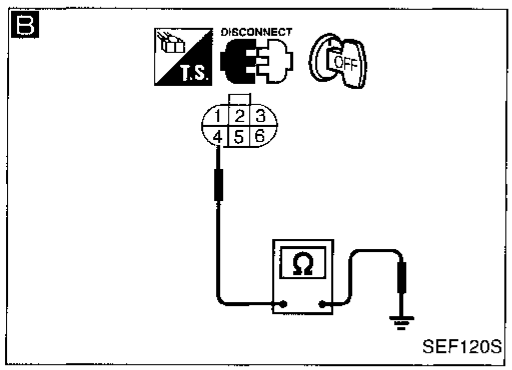

INSPECTION START

A

CHECK POWER SUPPLY.
1. Disconnect tank fuel temperature sensor harness connector.
2. Turn ignition switch "ON".
3. Check voltage between terminal ② and ground with CONSULT or tester.
Voltage: Approximately 5V

NG → Check the following.
- Harness connectors (C2), (M108)
- Harness for open or short between ECM and tank fuel temperature sensor

If NG, repair harness or connector.

OK ↓

B

CHECK GROUND CIRCUIT.
1. Turn ignition switch "OFF".
2. Check harness continuity between terminal ④ and body ground.
Continuity should exist.
If OK, check harness for short.

NG → Check the following.
- Harness connectors (C2), (M108)
- Harness for open or short between ECM and tank fuel temperature sensor

If NG, repair harness or connectors.

OK ↓

CHECK COMPONENT
(Tank fuel temperature sensor).
Refer to "COMPONENT INSPECTION" on next page.

NG → Replace tank fuel temperature sensor.

OK ↓

Disconnect and reconnect harness connectors in the circuit. Then retest.

Trouble is not fixed. ↓

Check ECM pin terminals for damage and check the connection of ECM harness connector. Reconnect ECM harness connector and retest.

↓

INSPECTION END

Tank Fuel Temperature Sensor (Cont'd)

COMPONENT INSPECTION

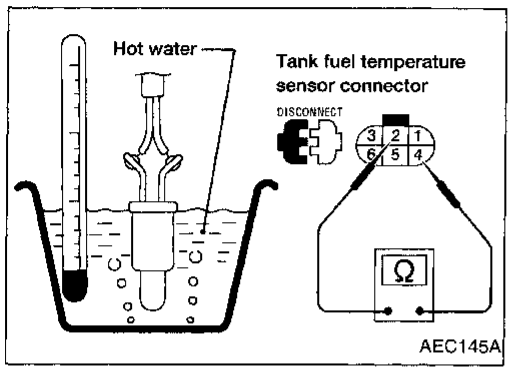

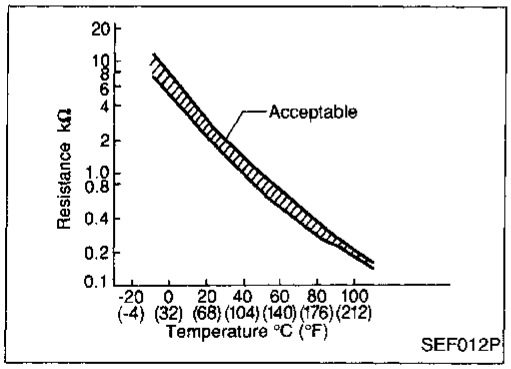

Tank fuel temperature sensor

Check resistance by heating with hot water or heat gun as shown in the figure.

⟨Reference data⟩

Temperature °C (°F)	Resistance kΩ
20 (68)	2.3 - 2.7
50 (122)	0.79 - 0.90

If NG, replace tank fuel temperature sensor.

No. 4 - 1 Cylinder Misfire, Multiple Cylinder Misfire

ON BOARD DIAGNOSIS LOGIC

If a misfire occurs, the engine speed will fluctuate. If the fluctuation is detected by the crankshaft position sensor (OBD), the misfire is diagnosed.
The misfire detection logic consists of the following two conditions.

Crankshaft position sensor (OBD) → Engine speed → ECM

1. One Trip Detection Logic (Three Way Catalyst Damage)
   When a misfire is detected which will overheat and damage the three way catalyst, the malfunction indicator lamp (MIL) will start blinking; even during the first trip. In this condition, ECM monitors the misfire every 200 revolutions.
   If the misfire frequency decreases to a level that will not damage the three way catalyst, the MIL will change from blinking to lighting up.
   (After the first trip detection, the MIL will light up from engine starting. If a misfire is detected that will cause three way catalyst damage, the MIL will start blinking.)
2. Two Trip Detection Logic (Exhaust quality deterioration)
   When a misfire that will not damage the three way catalyst (but will affect exhaust emission) occurs, the malfunction indicator lamp will light up based on the second consecutive trip detection logic. In this condition, ECM monitors the misfire for every 1,000 revolutions of the engine.

Diagnostic Trouble Code Nos.	Malfunction is detected when ...	Check Items (Possible Cause)
P0300 (0701)	● Multiple cylinders misfire.	● Improper spark plug ● Insufficient compression ● Incorrect fuel pressure ● EGR valve ● The injector circuit is open or shorted ● Injectors ● Intake air leak ● The ignition secondary circuit is open or shorted ● Lack of fuel ● Magnetized flywheel (drive plate)
P0301 (0608)	● No. 1 cylinder misfires.	
P0302 (0607)	● No. 2 cylinder misfires.	
P0303 (0606)	● No. 3 cylinder misfires.	
P0304 (0605)	● No. 4 cylinder misfires.	

DIAGNOSTIC TROUBLE CODE CONFIRMATION PROCEDURE (Overall)

1) Turn ignition switch "ON", and select "DATA MONITOR" mode with CONSULT.
2) Start engine and warm it up sufficiently.
3) Turn ignition switch "OFF" and wait at least 3 seconds.
4) Start engine again and drive at 1,500 - 3,000 rpm for at least 3 minutes.
   Hold the accelerator pedal as steady as possible during driving.

Note: Refer to the freeze frame data for the test driving condition.

OR

1) Start engine and warm it up sufficiently.
2) Turn ignition switch "OFF" and wait at least 3 seconds.
3) Start engine again and drive at 1,500 - 3,000 rpm for at least 3 minutes.
   Hold the accelerator pedal as steady as possible during driving.
4) Select "MODE 7" with GST.

Note: Refer to the freeze frame data for the test driving condition.

OR

1) Start engine and warm it up sufficiently.
2) Turn ignition switch "OFF" and wait at least 3 seconds.
3) Start engine again and drive at 1,500 - 3,000 rpm for at least 3 minutes.
   Hold the accelerator pedal as steady as possible during driving.
4) Perform "Diagnostic Test Mode II (Self-diagnostic results)" with ECM.

No. 4 - 1 Cylinder Misfire, Multiple Cylinder Misfire (Cont'd)

DIAGNOSTIC PROCEDURE

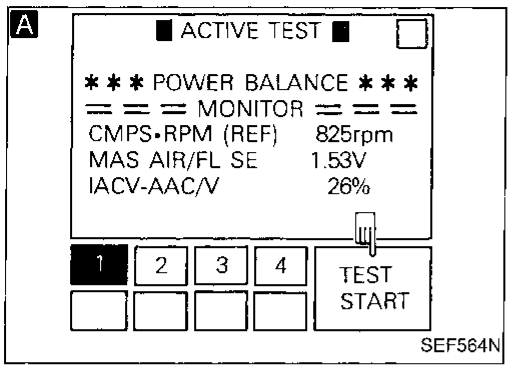

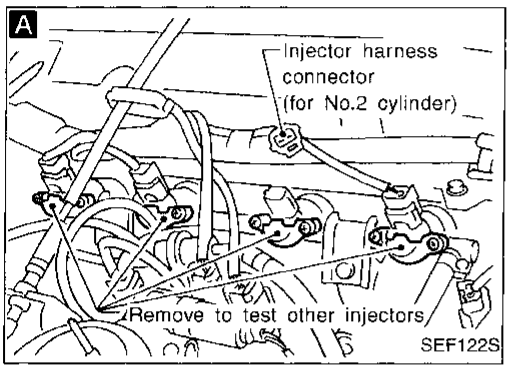

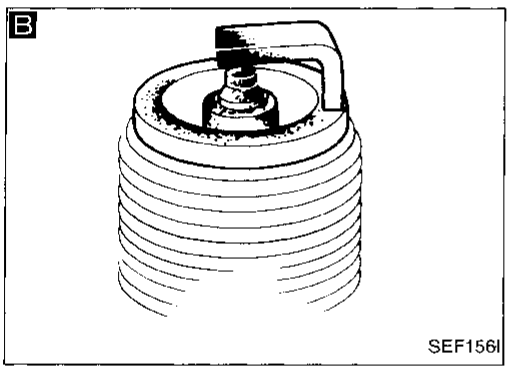

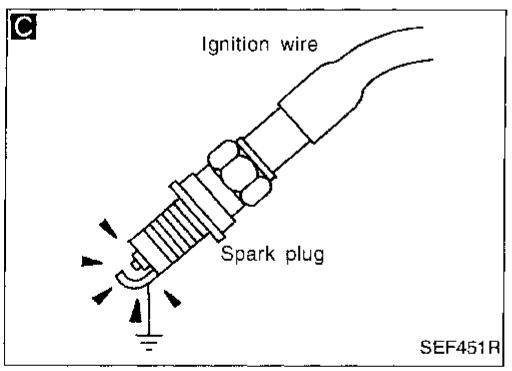

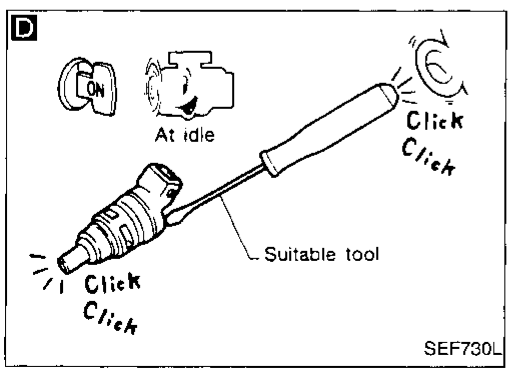

INSPECTION START

↓

CHECK FOR INTAKE AIR LEAK.
Start engine and run it at idle speed. Listen for an intake air leak.
- NG → Discover air leak location and repair.
- OK ↓

CHECK EXHAUST GAS CLOGGING.
Stop engine and visually check exhaust tube, three way catalyst and muffler for dent.
- NG → Repair or replace it.
- OK ↓

A

PERFORM POWER BALANCE TEST.
1. Perform "POWER BALANCE" in "ACTIVE TEST" mode.
2. Is there any cylinder which does not produce a momentary engine speed drop?

OR

When disconnecting each injector harness connector one at a time, is there any cylinder which does not produce a momentary engine speed drop?

- No → Go to **E** on next page.
- Yes ↓

B

CHECK SPARK PLUGS.
1. Turn ignition switch "OFF".
2. Remove the spark plugs and check for fouling, etc.

- NG → Repair or replace spark plug(s).
- OK ↓

C

CHECK IGNITION SPARK.
1. Disconnect ignition wire from spark plug.
2. Connect a known good spark plug to the ignition wire.
3. Place end of spark plug against a suitable ground and crank engine.
4. Check for spark.

- NG → CHECK COMPONENT (Ignition wires). Refer to "COMPONENT INSPECTION", EC-165.
  - OK → Check ignition coil, power transistor and their circuits. Refer to EC-261.
  - NG → Replace.
- OK ↓

D

CHECK INJECTOR.
1. Install all parts removed.
2. Start engine.
3. Does each injector make an operating sound at idle?

- No → Check injector(s) and circuit(s). Refer to EC-303.
- Yes ↓

Ⓐ
(Go to next page.)

No. 4 - 1 Cylinder Misfire, Multiple Cylinder Misfire (Cont'd)

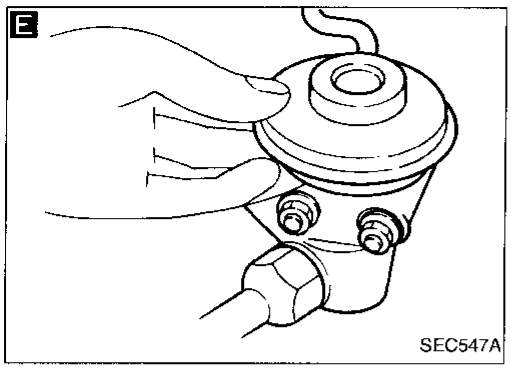

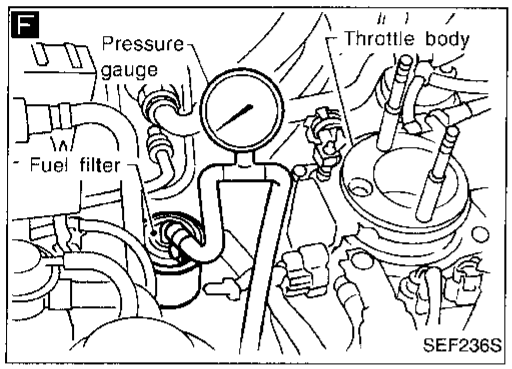

Ⓐ

E

CHECK EGR FUNCTION.
Perform "Procedure for malfunction B" "OVERALL FUNCTION CHECK", EC-179.

NG → Repair EGR system.

OK ↓

F

CHECK FUEL PRESSURE.
1. Release fuel pressure to zero. (Refer to page EC-25.)
2. Install fuel pressure gauge and check fuel pressure.
   At idle:
   Approx. 235 kPa
   (2.4 kg/cm², 34 psi)

NG → Check fuel pump and circuit.

OK ↓

CHECK COMPRESSION PRESSURE.
- Check compression pressure.

Standard:
kPa (kg/cm², psi)/300 rpm
1,236 (12.6, 179)
Minimum:
kPa (kg/cm², psi)/300 rpm
1,040 (10.6, 151)
Difference between each cylinder:
kPa (kg/cm², psi)/300 rpm
98 (1.0, 14)

NG → Check pistons, piston rings, valves, valve seats and cylinder head gaskets.

OK ↓

CHECK IGNITION TIMING.
Perform BASIC INSPECTION, EC-72.

NG → Adjust ignition timing.

OK ↓

CHECK MASS AIR FLOW SENSOR.

Check "MASS AIR FLOW" in "DATA MONITOR" mode with CONSULT.
1.8 - 6.5 g·m/sec: at idling (2WD)
2.1 - 6.0 g·m/sec: at idling (4WD)
7.7 - 15.0 g·m/sec: at 2,500 rpm (2WD)
6.8 - 13.3 g·m/sec: at 2,500 rpm (4WD)

OR

Check "mass air flow" in MODE 1 with GST.
1.8 - 6.5 g·m/sec: at idling (2WD)
2.1 - 6.0 g·m/sec: at idling (4WD)
7.7 - 15.0 g·m/sec: at 2,500 rpm (2WD)
6.8 - 13.3 g·m/sec: at 2,500 rpm (4WD)

NG → Check connectors for rusted terminals or loose connections in the mass air flow sensor circuit or engine grounds.
Refer to EC-93.
If NG, repair or replace it.

OK ↓

Ⓑ

(Go to next page.)

No. 4 - 1 Cylinder Misfire, Multiple Cylinder Misfire (Cont'd)

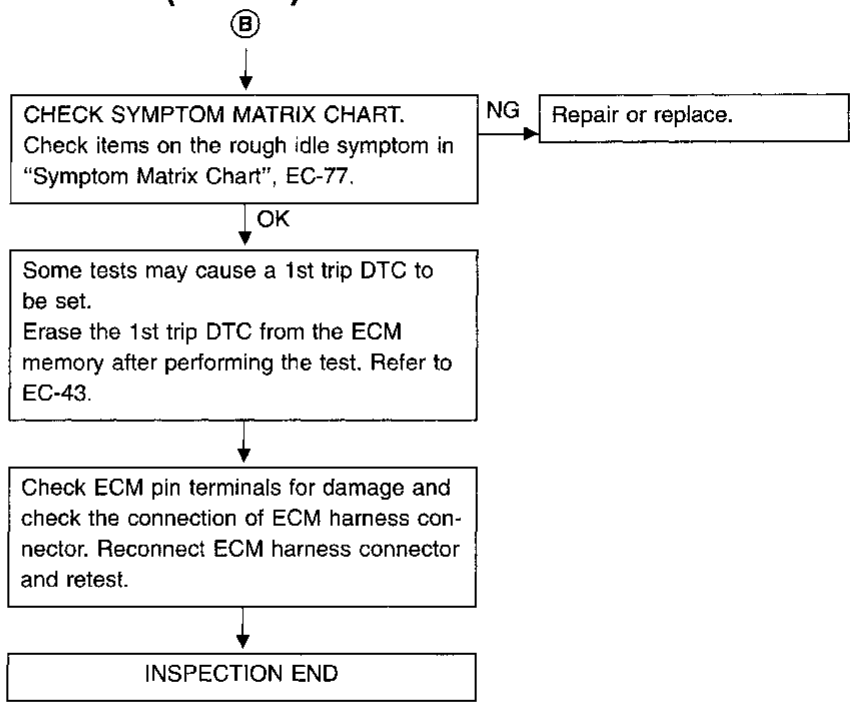

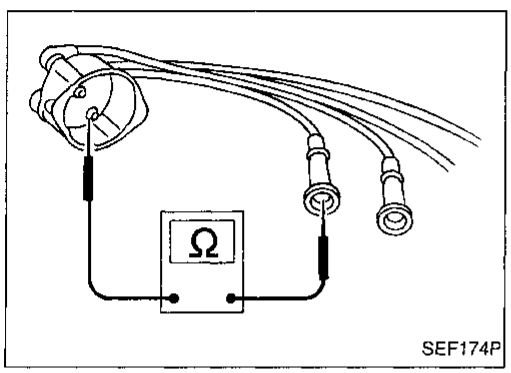

COMPONENT INSPECTION

Ignition wires

1. Inspect wires for cracks, damage, burned terminals and for improper fit.
2. Measure the resistance of wires to their distributor cap terminal. Move each wire while testing to check for intermittent breaks.

   Resistance:

   13.6 - 18.4 kΩ/m (4.15 - 5.61 kΩ/ft) at 25°C (77°F)

   If the resistance exceeds the above specification, inspect ignition wire to distributor cap connection. Clean connection or replace the ignition wire with a new one.

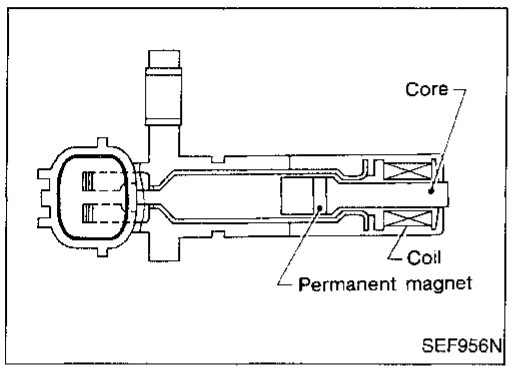

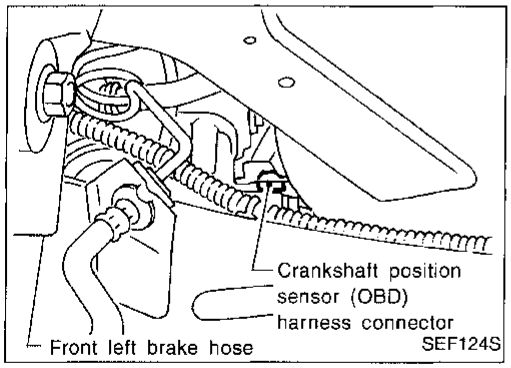

Crankshaft Position Sensor (CKPS) (OBD)

COMPONENT DESCRIPTION

The crankshaft position sensor (OBD) is located on the transmission housing facing the gear teeth (cogs) of the flywheel or drive plate. It detects the fluctuation of the engine revolution.
The sensor consists of a permanent magnet, core and coil.
When the engine is running, the high and low parts of the teeth cause the gap with the sensor to change.
The changing gap causes the magnetic field near the sensor to change.
Due to the changing magnetic field, the voltage from the sensor changes.
The ECM receives the voltage signal and detects the fluctuation of the engine revolution.
This sensor is not used to control the engine system. It is used only for the on board diagnosis of misfire.

ECM TERMINALS AND REFERENCE VALUE

Specification data are reference values and are measured between each terminal and ㊸ (ECCS ground).

TERMINAL NO.	WIRE COLOR	ITEM	CONDITION	DATA (DC voltage)
50	B/G	Sensors' ground	Engine is running. (Warm-up condition) └ Idle speed	0.001 - 0.02V
53	R	Crankshaft position sensor (OBD)	Engine is running. (A/T: N range, M/T: Neutral) └ Idle speed (Air conditioner switch "OFF".)	More than 0.2V* (AC range)

*: Average voltage for pulse signal (Actual pulse signal can be confirmed by oscilloscope.)

ON BOARD DIAGNOSIS LOGIC

Diagnostic Trouble Code No.	Malfunction is detected when	Check Items (Possible Cause)
P0335 0802	● The proper pulse signal from the crankshaft position sensor (OBD) is not sent to ECM while the engine is running at the specified engine speed.	● Harness or connectors (The crankshaft position sensor (OBD) circuit is open.) ● Crankshaft position sensor (OBD)

Crankshaft Position Sensor (CKPS) (OBD) (Cont'd)

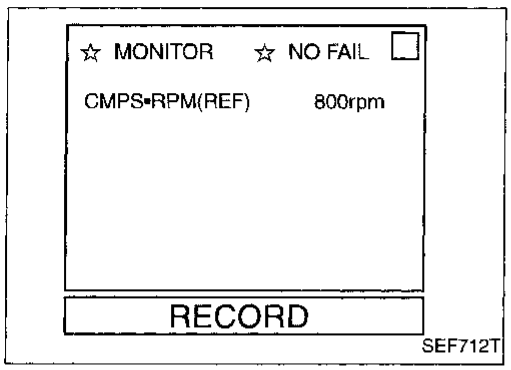

DIAGNOSTIC TROUBLE CODE CONFIRMATION PROCEDURE

1) Turn ignition switch "ON" and select "DATA MONITOR" mode with CONSULT.
2) Start engine and run it for at least 10 seconds at idle speed.

OR

1) Start engine and run it for at least 10 seconds at idle speed.
2) Select "MODE 7" with GST.

OR

1) Start engine and run it for at least 10 seconds at idle speed.
2) Turn ignition switch "OFF", wait at least 7 seconds and then turn "ON".
3) Perform "Diagnostic Test Mode II (Self-diagnostic results)" with ECM.

Crankshaft Position Sensor (CKPS) (OBD) (Cont'd)

EC-CKPS-01

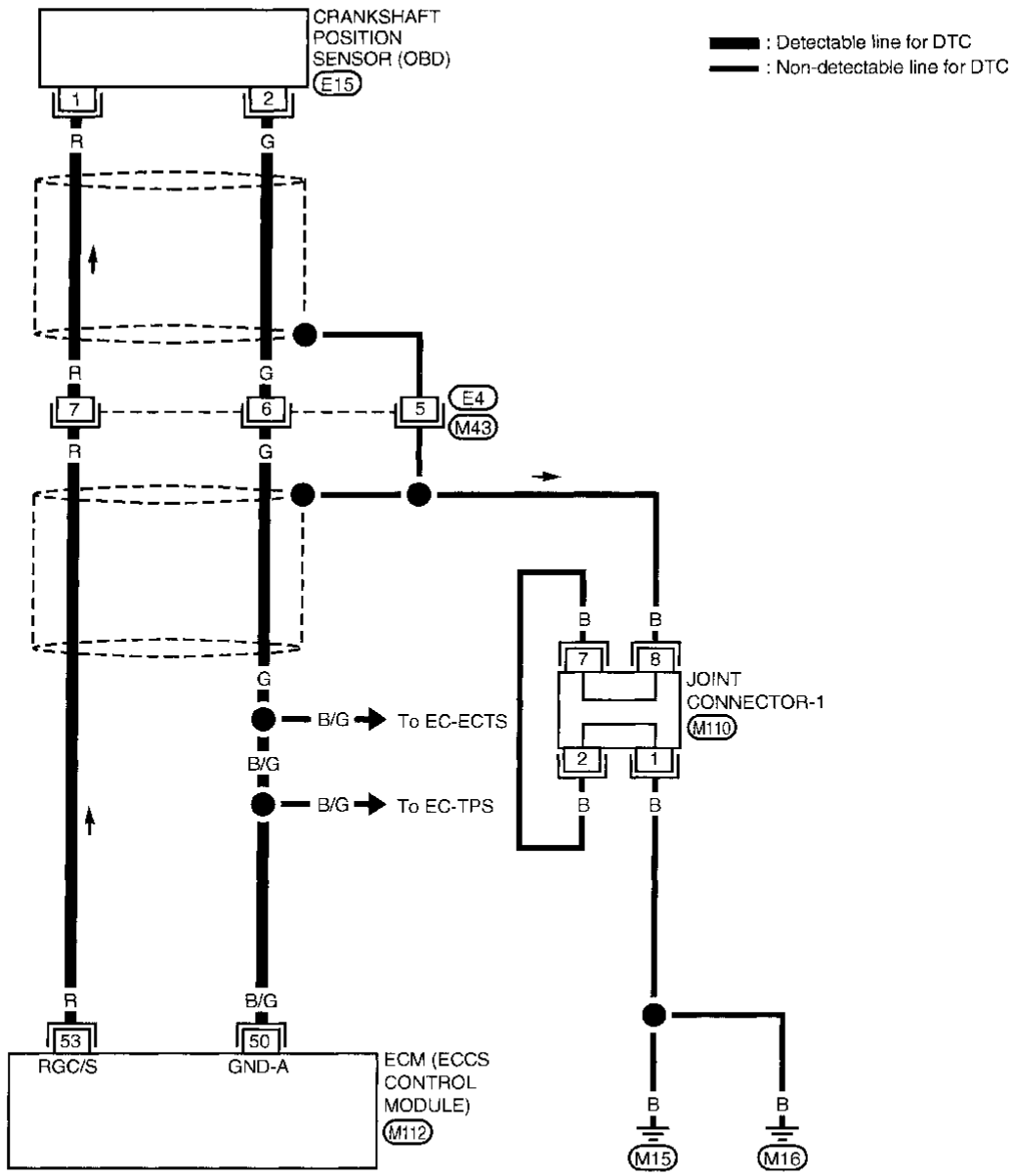

Refer to last page (Foldout page).
M110

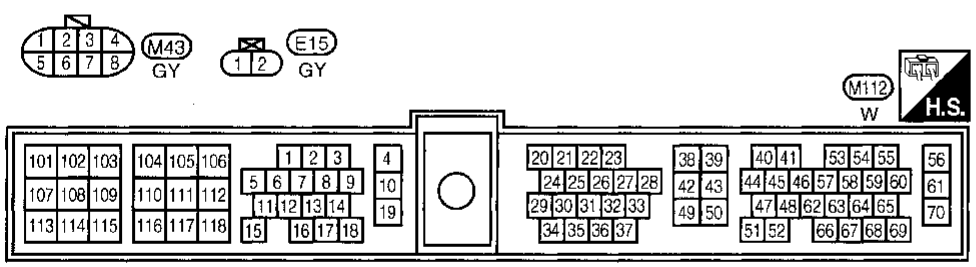

AEC063A

Crankshaft Position Sensor (CKPS) (OBD) (Cont'd)

DIAGNOSTIC PROCEDURE

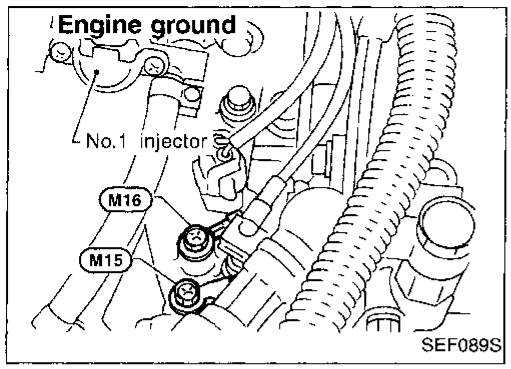

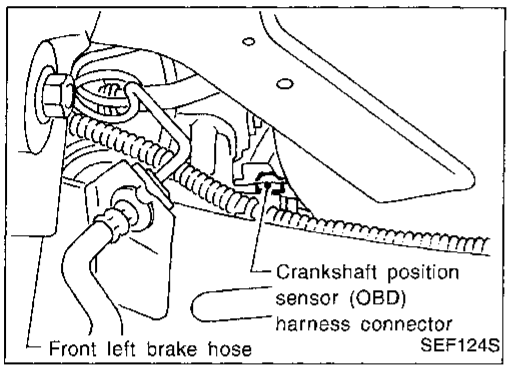

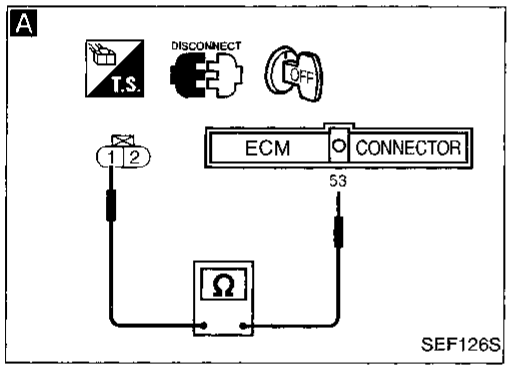

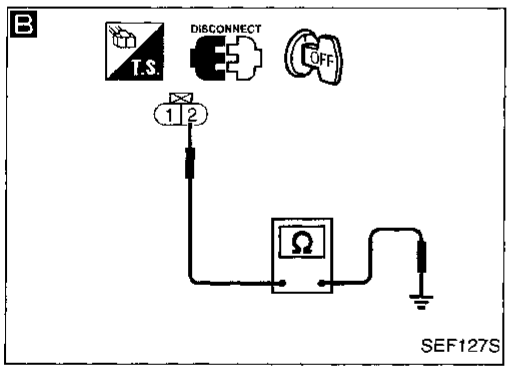

INSPECTION START

↓

CHECK SHIELD CIRCUIT.
1. Turn ignition switch "OFF".
2. Loosen and retighten engine ground screws.
3. Remove joint connector-1.
4. Check the following.
   - Continuity between joint connector-1 terminal ① and ground
   - Joint connector-1 (Refer to "HARNESS LAYOUT" in EL section.)

Continuity should exist.
If OK, check harness for short. Then reconnect joint connector-1.

NG → Repair harness or connectors.

OK ↓

A

CHECK INPUT SIGNAL CIRCUIT.
1. Disconnect crankshaft position sensor (OBD) harness connector and ECM harness connector.
2. Check harness continuity between ECM terminal ⑤③ and terminal ①.

Continuity should exist.
If OK, check harness for short.

NG → Check the following.
- Harness connectors (M43), (E4)
- Harness for open or short between ECM and crankshaft position sensor (OBD)

If NG, repair harness or connectors.

OK ↓

B

CHECK GROUND CIRCUIT.
1. Turn ignition switch "OFF".
2. Reconnect ECM harness connector.
3. Check harness continuity between terminal ② and engine ground.

Continuity should exist.
If OK, check harness for short.

NG → Check the following.
- Harness connectors (M43), (E4)
- Harness for open or short between ECM and crankshaft position sensor (OBD)

If NG, repair harness or connectors.

OK ↓

CHECK COMPONENT
[Crankshaft position sensor (OBD)].
Refer to "COMPONENT INSPECTION" on next page.

NG → Replace crankshaft position sensor (OBD).

OK ↓

Disconnect and reconnect harness connectors in the circuit. Then retest.

Trouble is not fixed. ↓

Check ECM pin terminals for damage and check the connection of ECM harness connector. Reconnect ECM harness connector and retest.

↓

INSPECTION END

Crankshaft Position Sensor (CKPS) (OBD) (Cont'd)

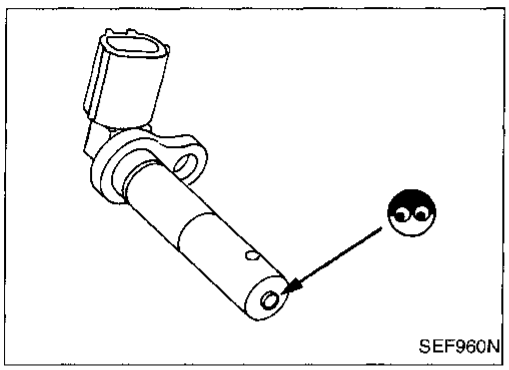

COMPONENT INSPECTION

Crankshaft position sensor (OBD)

1. Disconnect crankshaft position sensor (OBD) harness connector.
2. Loosen the fixing bolt of the sensor.
3. Remove the sensor.
4. Visually check the sensor for chipping.

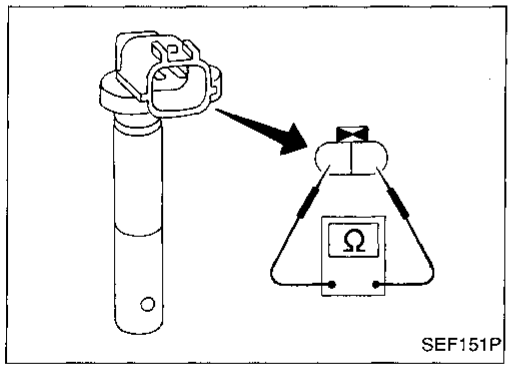

5. Check resistance as shown in the figure.
   Resistance: Approximately 166.5 - 203.5Ω at 20°C (68°F)

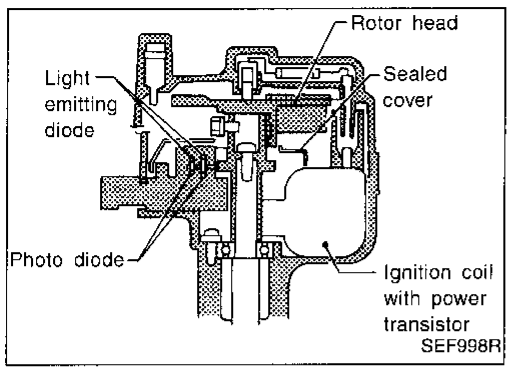

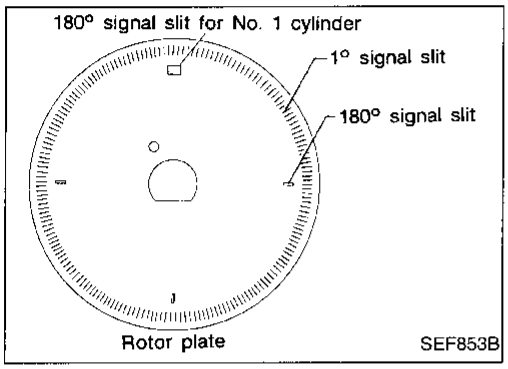

Camshaft Position Sensor (CMPS)

COMPONENT DESCRIPTION

The camshaft position sensor is a basic component of the ECCS. It monitors engine speed and piston position. These input signals to the ECM are used to control fuel injection, ignition timing and other functions.

The camshaft position sensor has a rotor plate and a wave-forming circuit. The rotor plate has 360 slits for a 1° signal and 4 slits for a 180° signal. The wave-forming circuit consists of Light Emitting Diodes (LED) and photo diodes.

The rotor plate is positioned between the LED and the photo diode. The LED transmits light to the photo diode. As the rotor plate turns, the slits cut the light to generate rough-shaped pulses. These pulses are converted into on-off signals by the wave-forming circuit and sent to the ECM.

The distributor is not repairable and must be replaced as an assembly, except distributor cap.

ECM TERMINALS AND REFERENCE VALUE

Specification data are reference values and are measured between each terminal and ㊸ (ECCS ground).

TERMINAL NO.	WIRE COLOR	ITEM	CONDITION	DATA (DC voltage)
40 44	GY R	Camshaft position sensor (Reference signal)	Engine is running.	Approximately 0.3V*
41	G	Camshaft position sensor (Position signal)	Engine is running.	Approximately 2.5V*

*: Average voltage for pulse signal (Actual pulse signal can be confirmed by oscilloscope.)

ON BOARD DIAGNOSIS LOGIC

Diagnostic Trouble Code No.	Malfunction is detected when	Check items (Possible cause)
P0340 0101	• Either 1° or 180° signal is not sent to ECM for the first few seconds during engine cranking. • Either 1° or 180° signal is not sent to ECM often enough while the engine speed is higher than the specified engine speed. • The relation between 1° and 180° signal is not in the normal range during the specified engine speed.	• Harness or connectors (The camshaft position sensor circuit is open or shorted.) • Camshaft position sensor • Starter motor (Refer to EL section.) • Starting system circuit (Refer to EL section.) • Dead (Weak) battery

Camshaft Position Sensor (CMPS) (Cont'd)

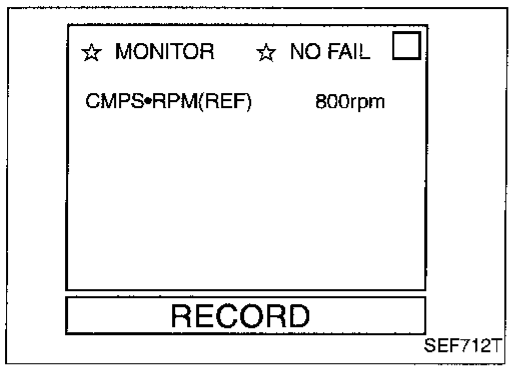

DIAGNOSTIC TROUBLE CODE CONFIRMATION PROCEDURE

Note: Before performing the following procedure, confirm that battery voltage is more than 10.5V.

1) Turn ignition switch "ON" and select "DATA MONITOR" mode with CONSULT.
2) Start engine and run it for 2 seconds. (If engine does not run, crank engine for at least 2 seconds.)

OR

1) Start engine and run it for 2 seconds. (If engine does not run, crank engine for at least 2 seconds.)
2) Select "MODE 7" with GST.

OR

1) Start engine and run it for 2 seconds. (If engine does not run, crank engine for at least 2 seconds.)
2) Turn ignition switch "OFF", wait at least 7 seconds and then turn "ON".
3) Perform "Diagnostic Test Mode II (Self-diagnostic results)" with ECM.

EC-CMPS-01

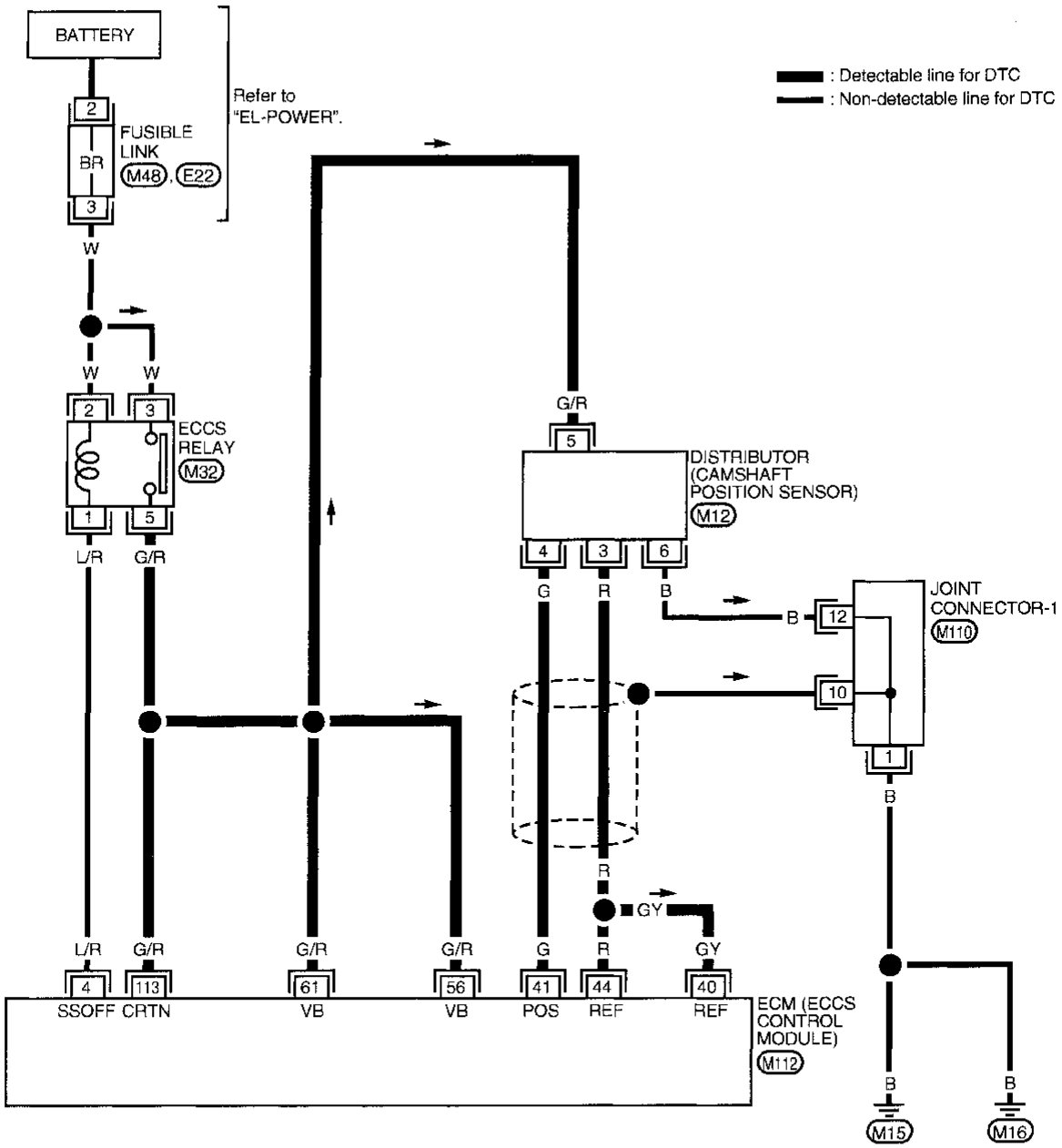

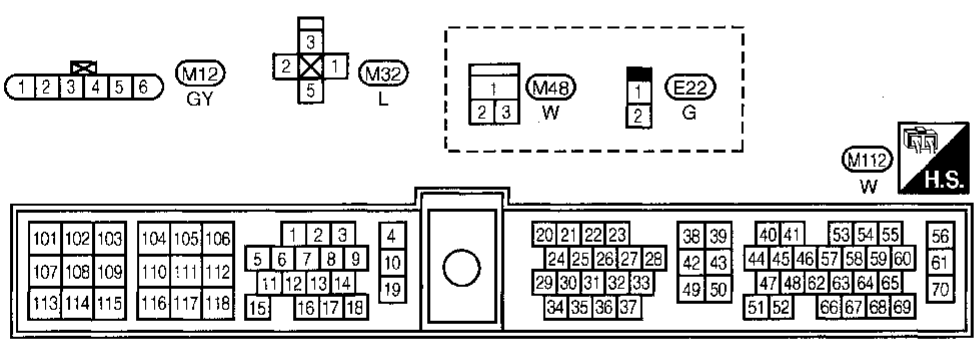

Refer to last page (Foldout page).
M110

AEC050A

Camshaft Position Sensor (CMPS) (Cont'd)

DIAGNOSTIC PROCEDURE (DETECTABLE CIRCUIT)

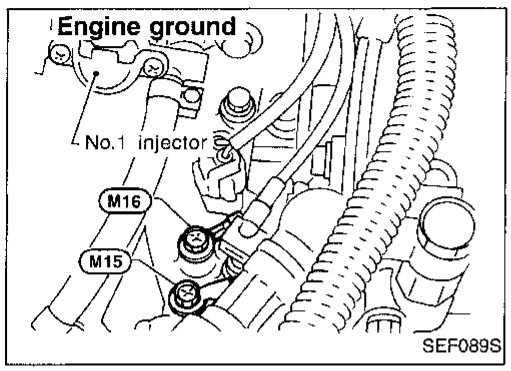

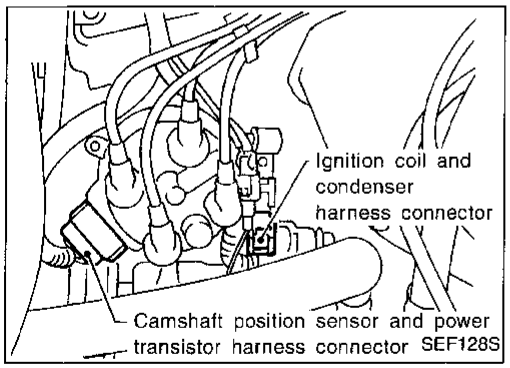

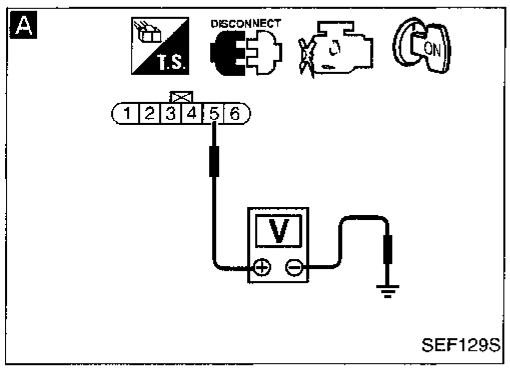

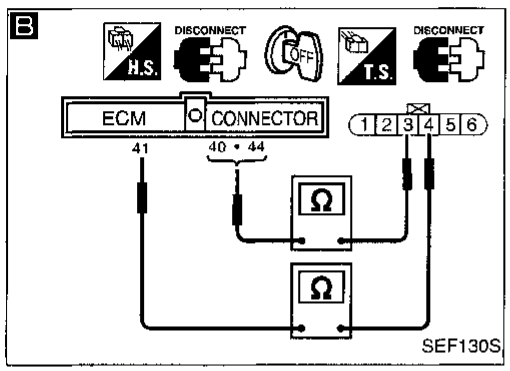

INSPECTION START

↓

CHECK SHIELD CIRCUIT.
1. Turn ignition switch "OFF".
2. Loosen and retighten engine ground screws.
3. Remove joint connector-1.
4. Check the following.
   - Continuity between joint connector-1 terminal ① and ground
   - Joint connector-1 (Refer to "HARNESS LAYOUT" in EL section.)

Continuity should exist.
If OK, check harness for short. Then reconnect joint connector-1.

NG → Repair harness or connectors.

OK ↓

A

CHECK POWER SUPPLY.
1. Disconnect camshaft position sensor harness connector.
2. Turn ignition switch "ON".
3. Check voltage between terminal ⑤ and ground with CONSULT or tester.

Voltage: Battery voltage

NG → Check the following.
- Harness for open or short between camshaft position sensor and ECM
- Harness for open or short between camshaft position sensor and ECCS relay

If NG, repair harness or connectors.

OK ↓

B

CHECK INPUT SIGNAL CIRCUIT.
1. Turn ignition switch "OFF".
2. Disconnect ECM harness connector.
3. Check harness continuity between terminal ④ and ECM terminal ㊶ (1° signal), terminal ③ and ECM terminals ㊵, ㊹ (180° signal).

Continuity should exist.
If OK, check harness for short.

NG → Repair harness or connectors.

OK ↓

CHECK COMPONENT
(Camshaft position sensor).
Refer to "COMPONENT INSPECTION" on next page.

NG → Replace camshaft position sensor.

OK ↓

Disconnect and reconnect harness connectors in the circuit. Then retest.

Trouble is not fixed. ↓

Check ECM pin terminals for damage and check the connection of ECM harness connector. Reconnect ECM harness connector and retest.

↓

INSPECTION END

Camshaft Position Sensor (CMPS) (Cont'd)

DIAGNOSTIC PROCEDURE (NON-DETECTABLE CIRCUIT)

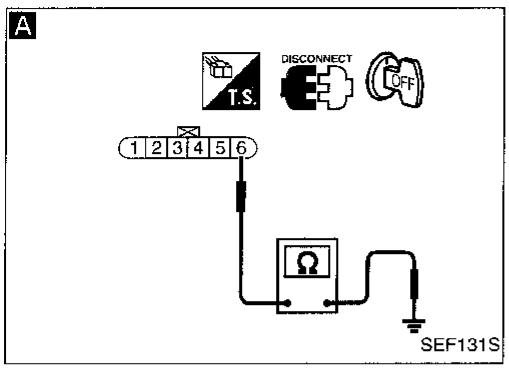

INSPECTION START

↓

A

CHECK GROUND CIRCUIT.
1. Disconnect camshaft position sensor harness connector.
2. Check harness continuity between terminal ⑥ and engine ground.
   Continuity should exist.
   If OK, check harness for short.

NG → Check the following.
- Joint connector-1
- Harness for open or short between camshaft position sensor and ground

If NG, repair harness or connectors.

↓ OK

CHECK COMPONENT (Camshaft position sensor). Refer to "COMPONENT INSPECTION" below.

NG → Replace camshaft position sensor.

↓ OK

Disconnect and reconnect harness connectors in the circuit. Then retest.

↓ Trouble is not fixed.

Check ECM pin terminals for damage and check the connection of ECM harness connector. Reconnect ECM harness connector and retest.

↓

INSPECTION END

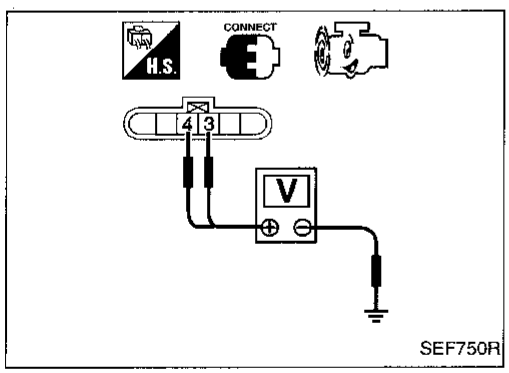

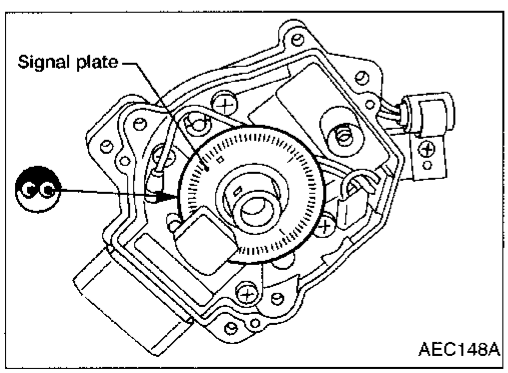

COMPONENT INSPECTION

Camshaft position sensor

1. Start engine.
2. Check voltage between terminals ③, ④ and ground with DC range.

Condition	Terminals	Voltage
Engine running at idle	③ and ground	Approximately 0.3V*
	④ and ground	Approximately 2.5V*

*: Average voltage for pulse signal (Actual pulse signal can be confirmed by oscilloscope.)

If NG, replace distributor assembly with camshaft position sensor.

3. Visually check signal plate for damage or dust.

EGR Function

SYSTEM DESCRIPTION

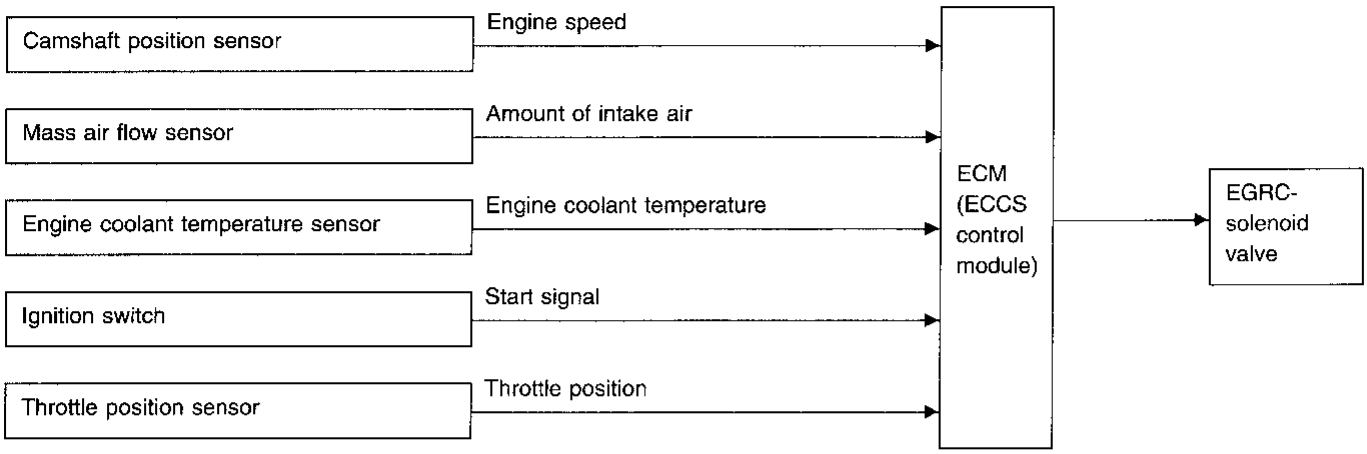

This system cuts and controls vacuum applied to the EGR valve to suit engine operating conditions. This cut-and-control operation is accomplished through the ECM and the EGRC-solenoid valve. When the ECM detects any of the following conditions, current flows through the solenoid valve. This causes the port vacuum to be discharged into the atmosphere and the EGR valve remains closed.

- Low engine coolant temperature
- Engine starting
- Engine stopped
- Engine idling
- Excessively high engine coolant temperature
- Mass air flow sensor malfunction

EGR and vacuum

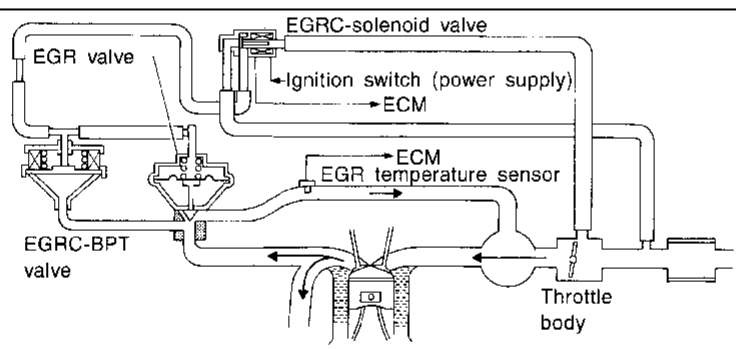

SEF641Q

ECM TERMINALS AND REFERENCE VALUE

Specification data are reference values and are measured between each terminal and ㊸ (ECCS ground).

TERMINAL NO.	WIRE COLOR	ITEM	CONDITION	DATA (DC voltage)
50	B/G	Sensors' ground	Engine is running. (Warm-up condition) — Idle speed	0.001 - 0.02V
62	G/OR	EGR temperature sensor	Engine is running. (Warm-up condition) — Idle speed	Less than 4.5V
			Engine is running. (Warm-up condition) — EGR system is operating.	0 - 3.0V
103	W/L	EGRC-solenoid valve	Engine is running. (Warm-up condition) — Engine speed is 2,000 rpm.	BATTERY VOLTAGE (11 - 14V)
			Engine is running. (Warm-up condition) — Idle speed	0 - 1V

EGR Function (Cont'd)

COMPONENT DESCRIPTION

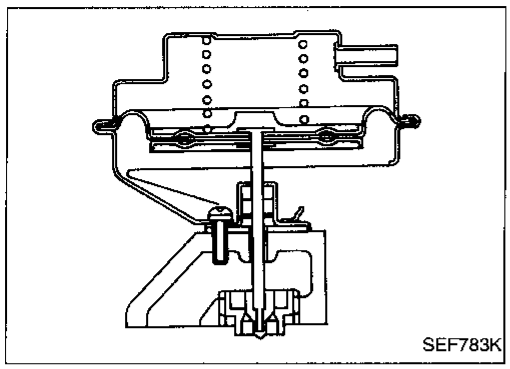

Exhaust gas recirculation (EGR) valve

The EGR valve controls the amount of exhaust gas routed to the intake manifold. Vacuum is applied to the EGR valve in response to throttle valve opening. The vacuum controls the movement of a taper valve connected to the vacuum diaphragm in the EGR valve.

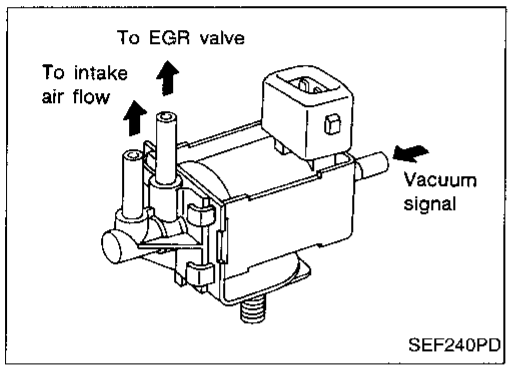

EGRC-solenoid valve

The EGRC-solenoid valve responds to signals from the ECM. When the ECM sends an ON (ground) signal, the coil in the solenoid valve is energized. A plunger will then move to cut the vacuum signal (from the throttle body to the EGR valve).
When the ECM sends an OFF signal, the vacuum signal passes through the solenoid valve. The signal then reaches the EGR valve.

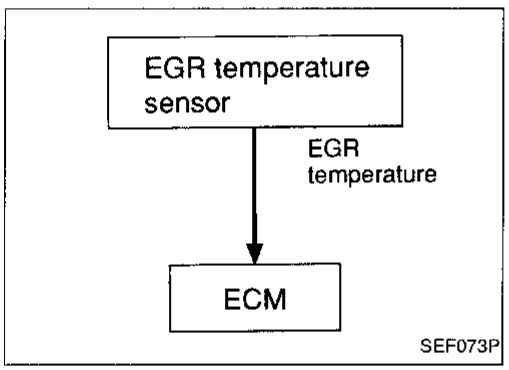

ON BOARD DIAGNOSIS LOGIC

If the absence of EGR flow is detected by EGR temperature sensor under the condition that calls for EGR, a low-flow malfunction is diagnosed.
If EGR temperature sensor detects EGR flow under the condition that does not call for EGR, a high-flow malfunction is diagnosed.

Diagnostic Trouble Code No.	Malfunction is detected when ...	Check Items (Possible Cause)
P0400 0302	A) The exhaust gas recirculation (EGR) flow is excessively low during the specified driving condition.	• EGR valve stuck closed • EGRC-BPT valve leaking • Passage blocked • EGRC-solenoid valve • Tube leaking for EGR valve • EGR temperature sensor
	B) The exhaust gas recirculation (EGR) flow is excessively high during the specified driving condition.	• EGRC-solenoid valve • EGR valve leaking or stuck open • EGR temperature sensor

OVERALL FUNCTION CHECK

Use this procedure to check the overall EGR function. During this check, a 1st trip DTC might not be confirmed.

Before starting with the following procedure, check the engine coolant temperature of the freeze frame data with CONSULT or Generic Scan Tool.
If the engine coolant temperature is higher than or equal to 55°C (131°F), perform only "Procedure for malfunction A".
If the engine coolant temperature is lower than 55°C (131°F), perform both "Procedure for malfunction A" and "Procedure for malfunction B". In this case, check DTCs in the ECM and perform inspections one by one based on "INSPECTION PRIORITY", refer to EC-75.

EGR Function (Cont'd)

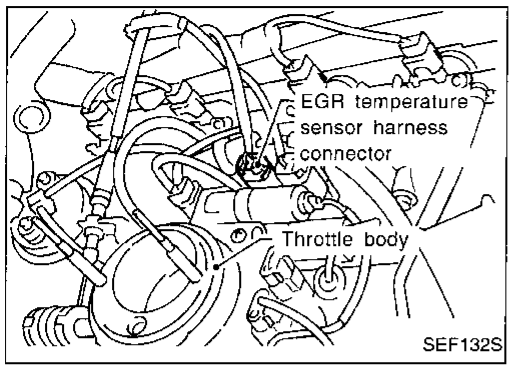

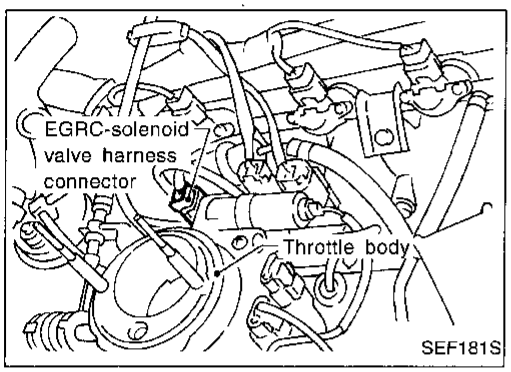

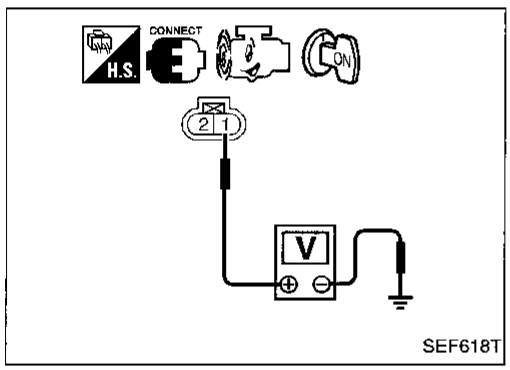

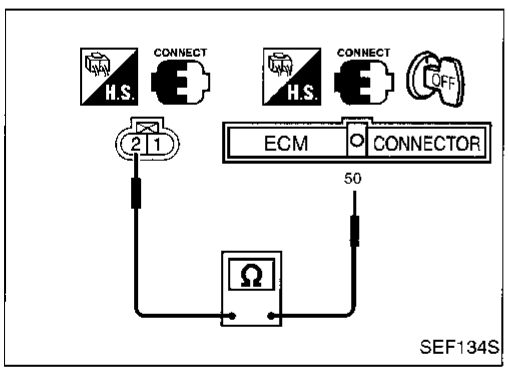

Procedure for malfunction A

1) Start engine and warm it up sufficiently.
2) Check for the EGR valve lifting when revving from 2,000 rpm up to 4,000 rpm under no load.
   EGR valve should lift up and down without sticking.

If EGR valve does not lift up and down, try again with either of the following methods:

- Select "EGRC SOLENOID VALVE" in "ACTIVE TEST" mode with CONSULT and turn the solenoid valve "OFF".
- Disconnect EGRC-solenoid valve harness connector. (The 1st trip DTC for EGRC-solenoid valve will be displayed, however, ignore it.)

3) Check voltage between EGR temperature sensor harness connector terminal ① and ground at idle speed.
   Less than 4.5V should exist.
4) Turn ignition switch "OFF".
   Check harness continuity between EGR temperature sensor harness connector terminal ② and ECM terminal ㊿.
   Continuity should exist.
5) Perform "COMPONENT INSPECTION", "EGR temperature sensor", EC-183.

Overall function check

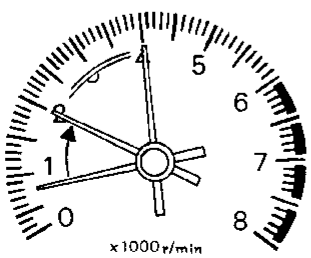

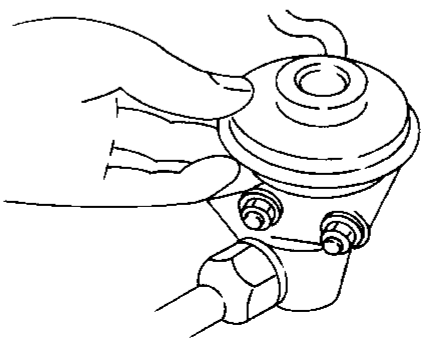

Check the EGR valve lifting when revving engine from 2,000 rpm up to 4,000 rpm.

SEF642Q

EGR Function (Cont'd)

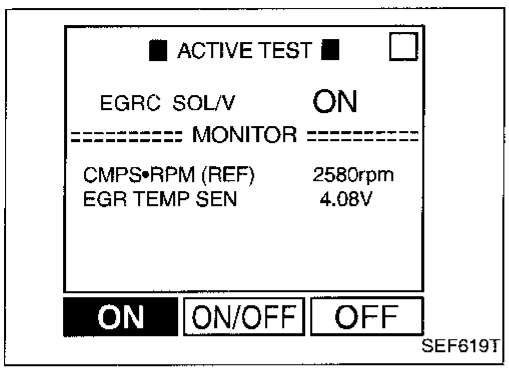

SEF619T

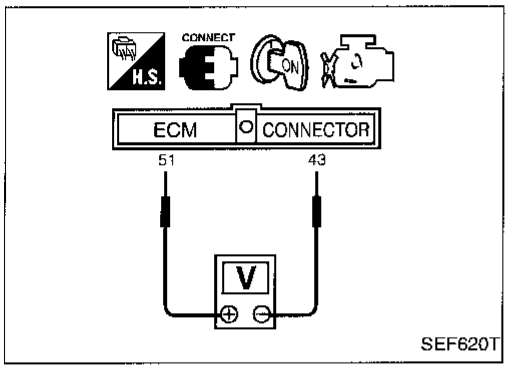

SEF620T

Procedure for malfunction B

1) Start engine.
2) Turn EGRC-solenoid valve "ON" in "ACTIVE TEST" mode with CONSULT.
3) Check for the EGR valve lifting when revving from 2,000 rpm up to 4,000 rpm under no load.
EGR valve should be closed and should not lift up.

— OR —

1) Confirm the engine coolant temperature is lower than 55°C (131°F) in "Mode 1" with generic scan tool.
Perform the following steps before its temperature becomes higher than 55°C (131°F).
2) Start engine.
3) Check for the EGR valve lifting when revving from 2,000 rpm up to 4,000 rpm under no load.
EGR valve should be closed and should not lift up.

— OR —

1) Confirm the voltage between ECM terminals 51 and 43 is higher than 2.08V.
Perform the following steps before the voltage becomes lower than 2.08V.
2) Start engine.
3) Check for the EGR valve lifting when revving from 2,000 rpm up to 4,000 rpm under no load.
EGR valve should be closed and should not lift up.

Overall function check

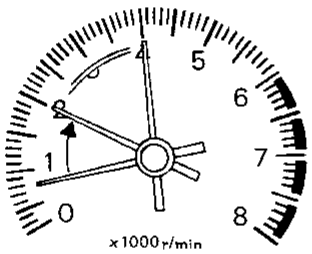

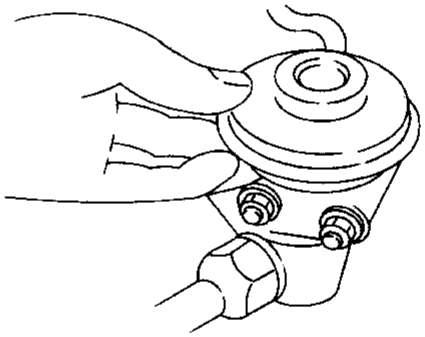

Check the EGR valve lifting when revving engine from 2,000 rpm up to 4,000 rpm.

SEF642Q

EC-EGRC1-01

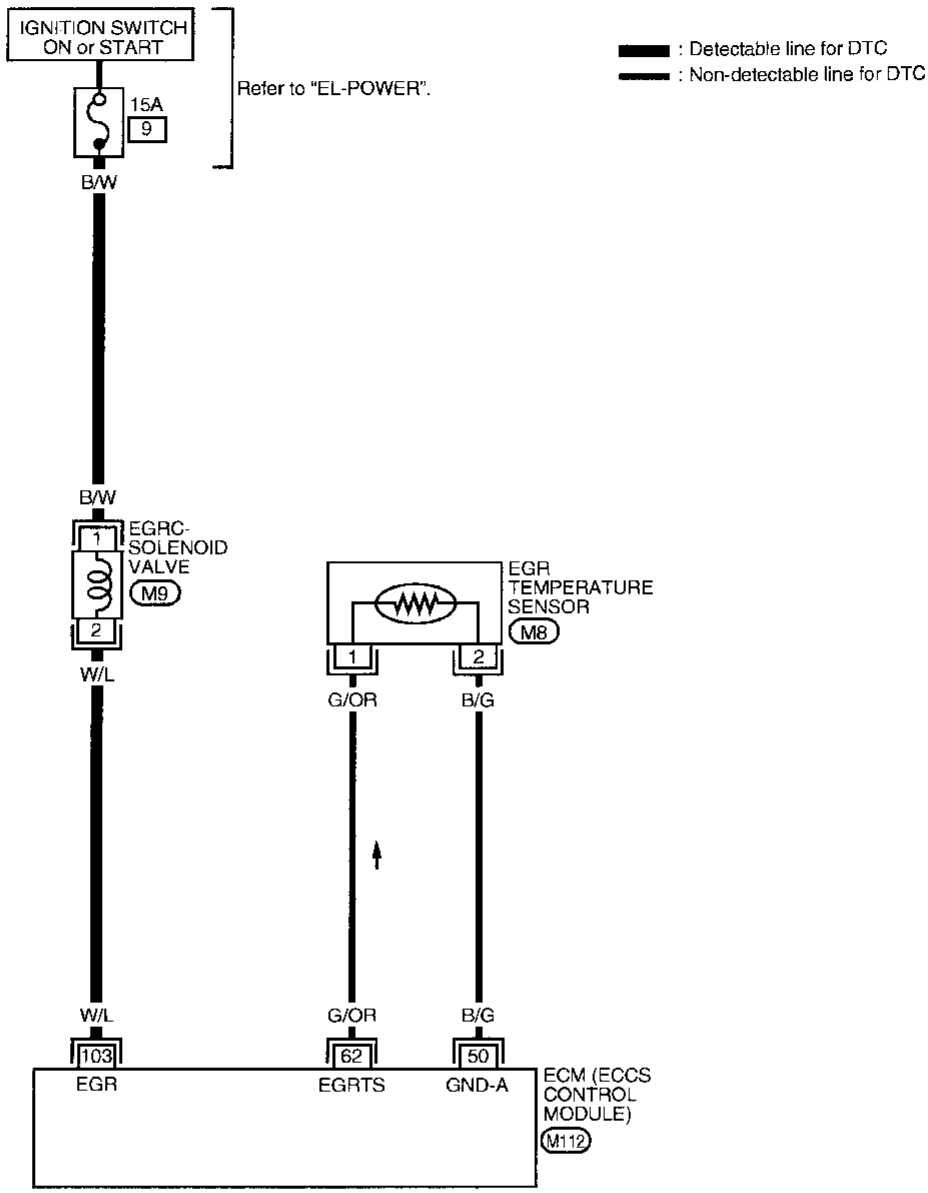

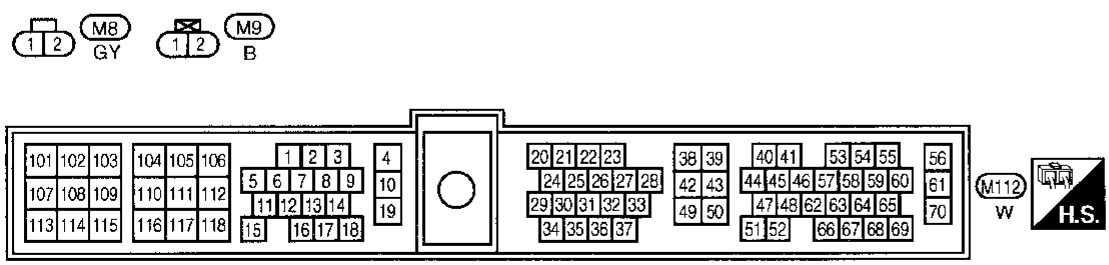

AEC309A

EGR Function (Cont'd)

DIAGNOSTIC PROCEDURE

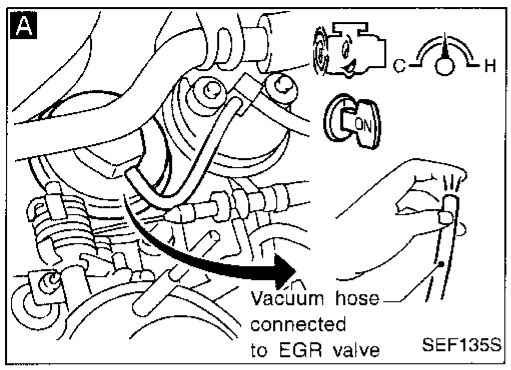

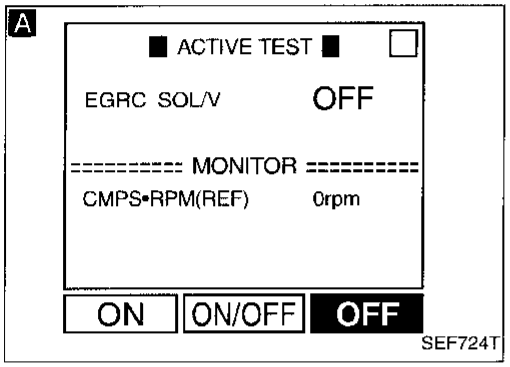

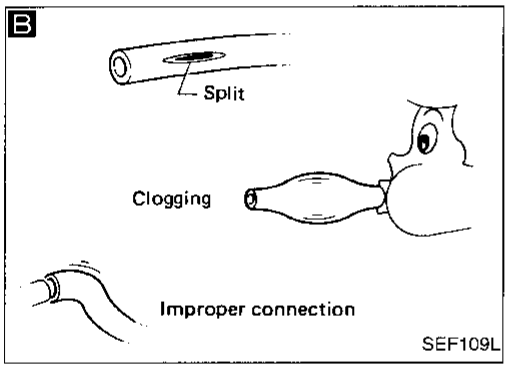

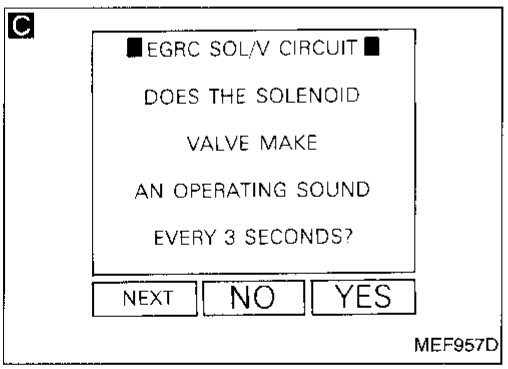

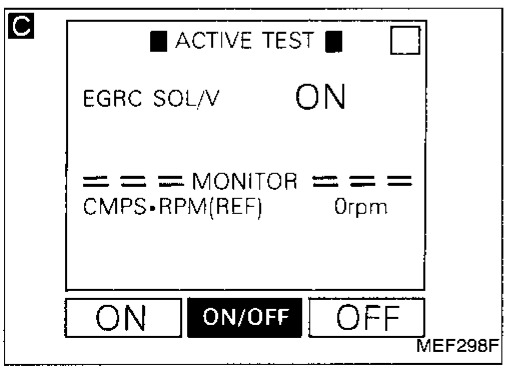

INSPECTION START

A

CHECK VACUUM SOURCE TO EGR VALVE.

1. Start engine and warm it up sufficiently.
2. Disconnect vacuum hose to EGR valve.
3. Check for vacuum existence.
   Vacuum should not exist at idle.
4. Check for vacuum existence when revving from 2,000 rpm up to 4,000 rpm with the following methods.
   - Select "EGRC SOLENOID VALVE" in "ACTIVE TEST" mode with CONSULT and turn the solenoid valve "OFF".

   OR

   - Disconnect EGRC-solenoid valve harness connector. (The 1st trip DTC for EGRC-solenoid valve will be displayed, however, ignore it.)

   Vacuum should exist when revving engine.

OK → CHECK COMPONENTS (EGR valve, and EGRC-BPT valve). Refer to "COMPONENT INSPECTION" on next page.

NG → Replace malfunctioning component(s).

NG

B

CHECK VACUUM HOSE.
Check vacuum hose for clogging, cracks or improper connection.

NG

C

CHECK COMPONENT
(EGRC-solenoid valve).

1. Turn ignition switch "ON".
2. Perform "EGRC SOL/V CIRCUIT" in "FUNCTION TEST" mode with CONSULT.

OR

1. Turn ignition switch "ON".
2. Turn EGRC-solenoid valve "ON" and "OFF" in "ACTIVE TEST" mode with CONSULT and check operating sound.

OR

1. Turn ignition switch "ON".
2. Check operating sound of the solenoid valve when disconnecting and connecting EGRC-solenoid valve harness connector. (The DTC or 1st trip DTC for the EGRC-solenoid valve will be displayed, however, ignore it.)

NG → Replace EGRC-solenoid valve.

OK

Ⓐ
(Go to next page.)

EGR Function (Cont'd)

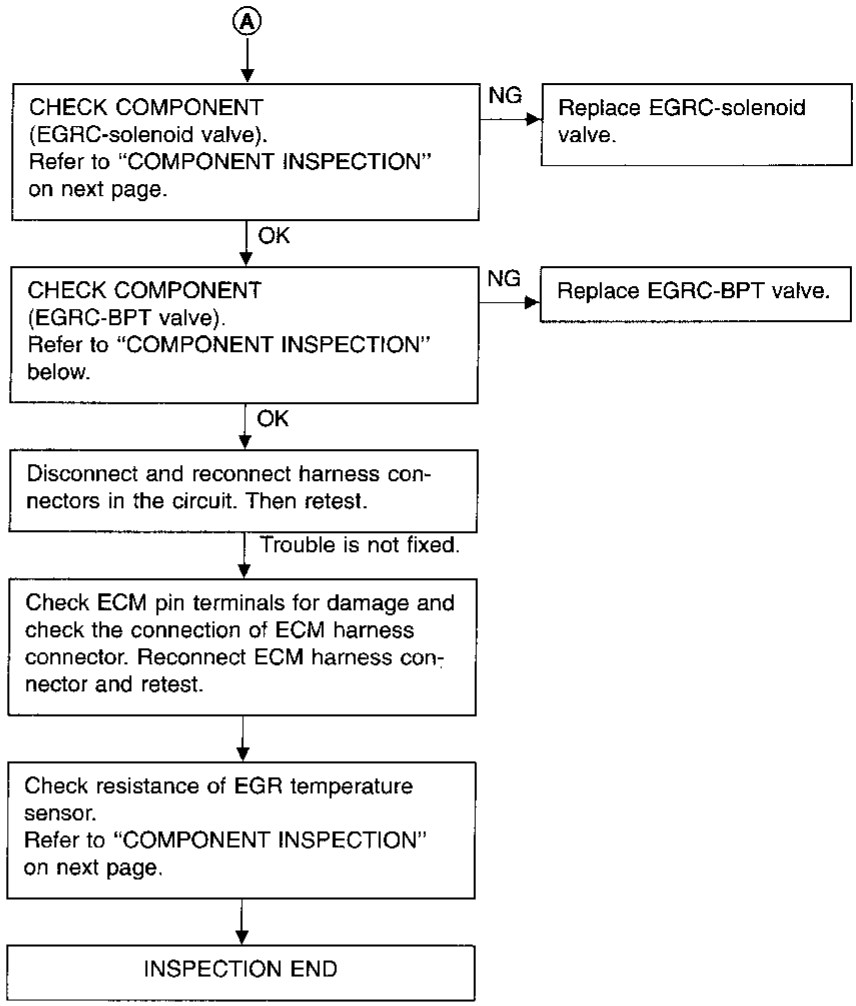

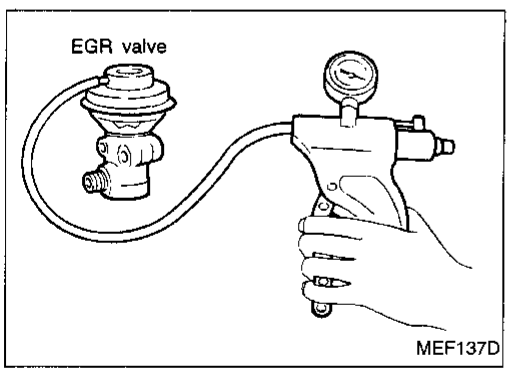

COMPONENT INSPECTION

EGR valve

Apply vacuum to EGR valve vacuum port with a hand vacuum pump.

EGR valve spring should lift.

If NG, replace EGR valve.

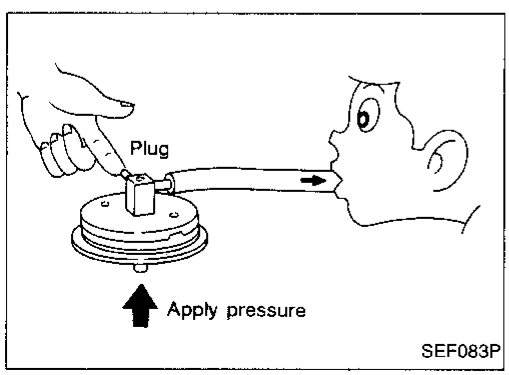

EGRC-BPT valve

1. Plug one of two ports of EGRC-BPT valve.
2. Vacuum from the other port and check for leakage while applying a pressure above 0.981 kPa (100 mmH_2O, 3.94 inH_2O) from under EGRC-BPT valve.
3. If a leakage is noted, replace the valve.

EGR Function (Cont'd)

EGRC-solenoid valve

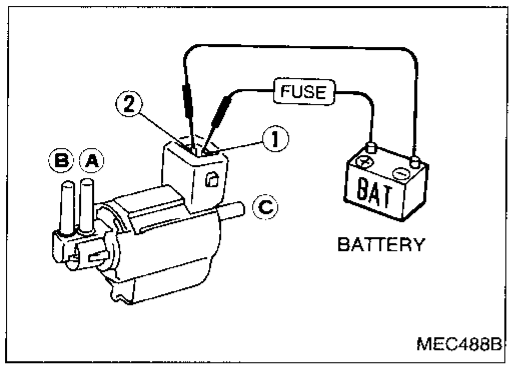

Check solenoid valve, following the table as shown below:

Conditions	Air passage continuity between Ⓐ and Ⓑ	Air passage continuity between Ⓐ and Ⓒ
12V direct current supply between terminals ① and ②	Yes	No
No supply	No	Yes

If NG, replace the solenoid valve.

EGR temperature sensor

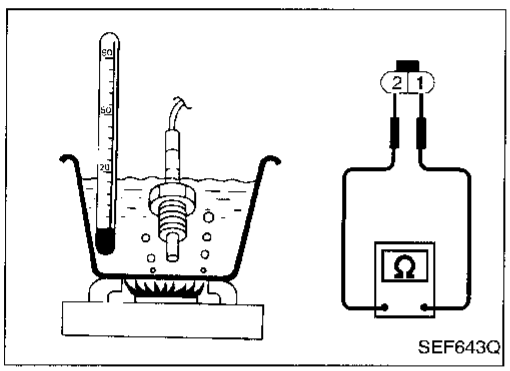

Check resistance change and resistance value.

⟨Reference data⟩

EGR temperature °C (°F)	Voltage (V)	Resistance (MΩ)
0 (32)	4.81	7.9 - 9.7
50 (122)	2.82	0.57 - 0.70
100 (212)	0.8	0.08 - 0.10

If NG, replace EGR temperature sensor.

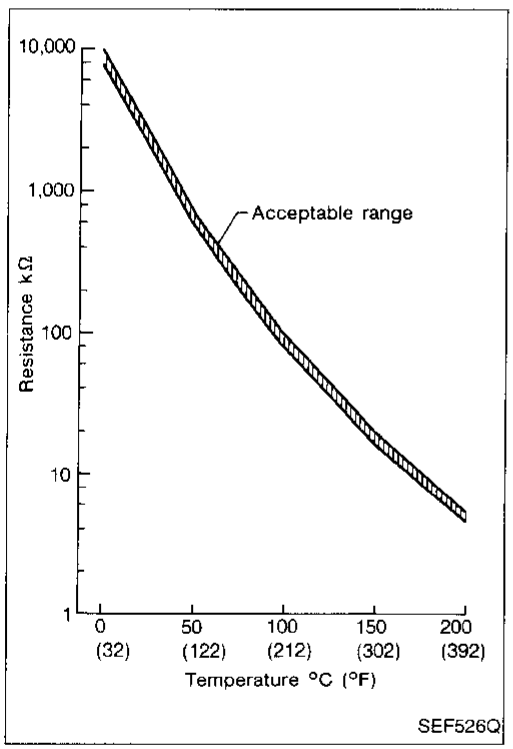

EGRC-BPT Valve Function

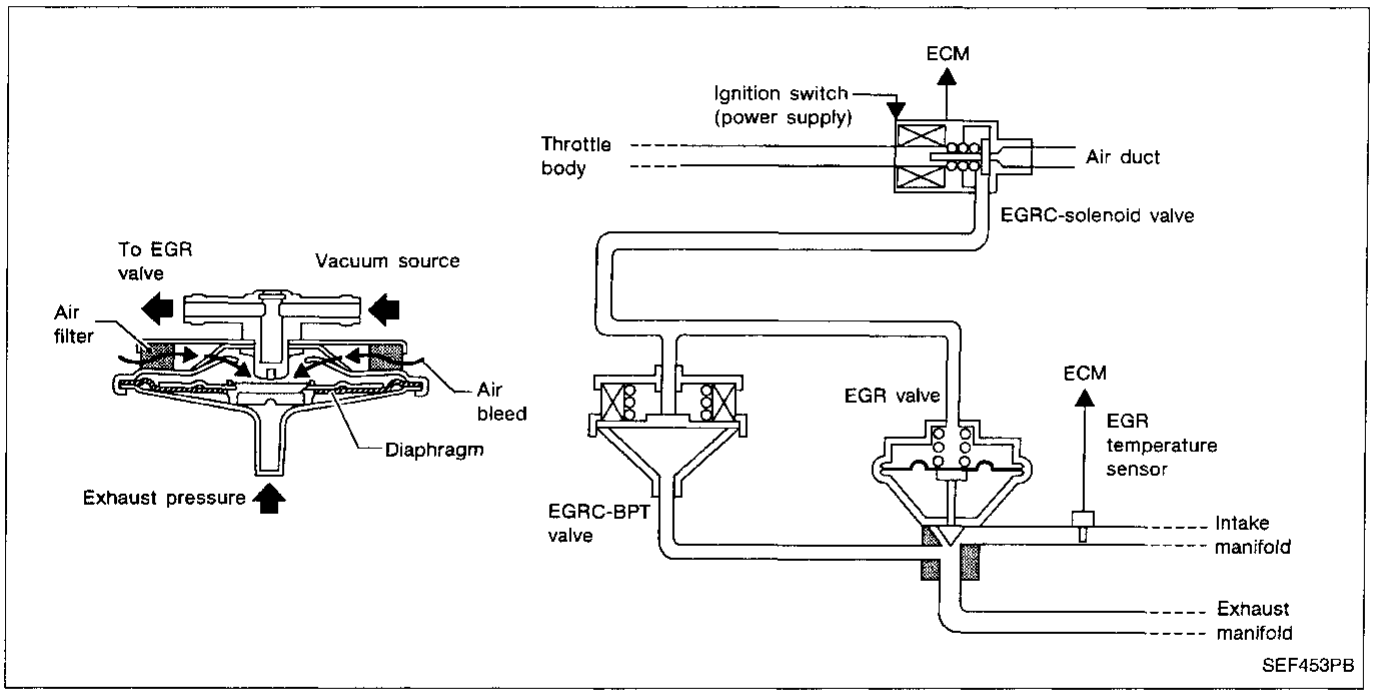

SYSTEM DESCRIPTION

The EGRC-BPT valve monitors exhaust pressure to activate the diaphragm, controlling throttle body vacuum applied to the EGR valve. In other words, recirculated exhaust gas is controlled in response to positioning of the EGR valve or to engine operation.

ON BOARD DIAGNOSIS LOGIC

If too much EGR flow exists due to an EGRC-BPT valve malfunction, off idle engine roughness will increase. If the roughness is large, then the vacuum to the EGR valve is interrupted through the EGRC-solenoid valve. If the engine roughness is reduced at that time, the EGRC-BPT valve malfunction is indicated.

Diagnostic Trouble Code No.	Malfunction is detected when ...	Check Items (Possible Cause)
P0402 0306	● The EGRC-BPT valve does not operate properly.	● EGRC-BPT valve ● Misconnected rubber tube ● Blocked rubber tube ● Intake manifold EGR passage

OVERALL FUNCTION CHECK

Use this procedure to check the overall function of the EGRC-BPT valve. During this check, a 1st trip DTC might not be confirmed.

1. Disconnect the rubber tube to the EGRC-solenoid valve at the intake manifold.
2. Disconnect the rubber tube to the EGRC-solenoid valve at the EGRC-BPT valve.
   Connect the intake manifold and the EGRC-BPT valve. (The intake manifold vacuum will be directly applied to the EGRC-BPT valve.)
3. Start engine.
4. Check for the EGR valve lifting with engine at less than 1,500 rpm under no load.
   EGR valve should remain closed.
5. Check the EGR valve lifting when revving from 2,000 rpm up to 4,000 rpm under no load.
   EGR valve should lift up, and go down without sticking when the engine is returned to idle.
6. Check rubber tube between EGRC-solenoid valve and throttle body for misconnection, cracks or blockages.

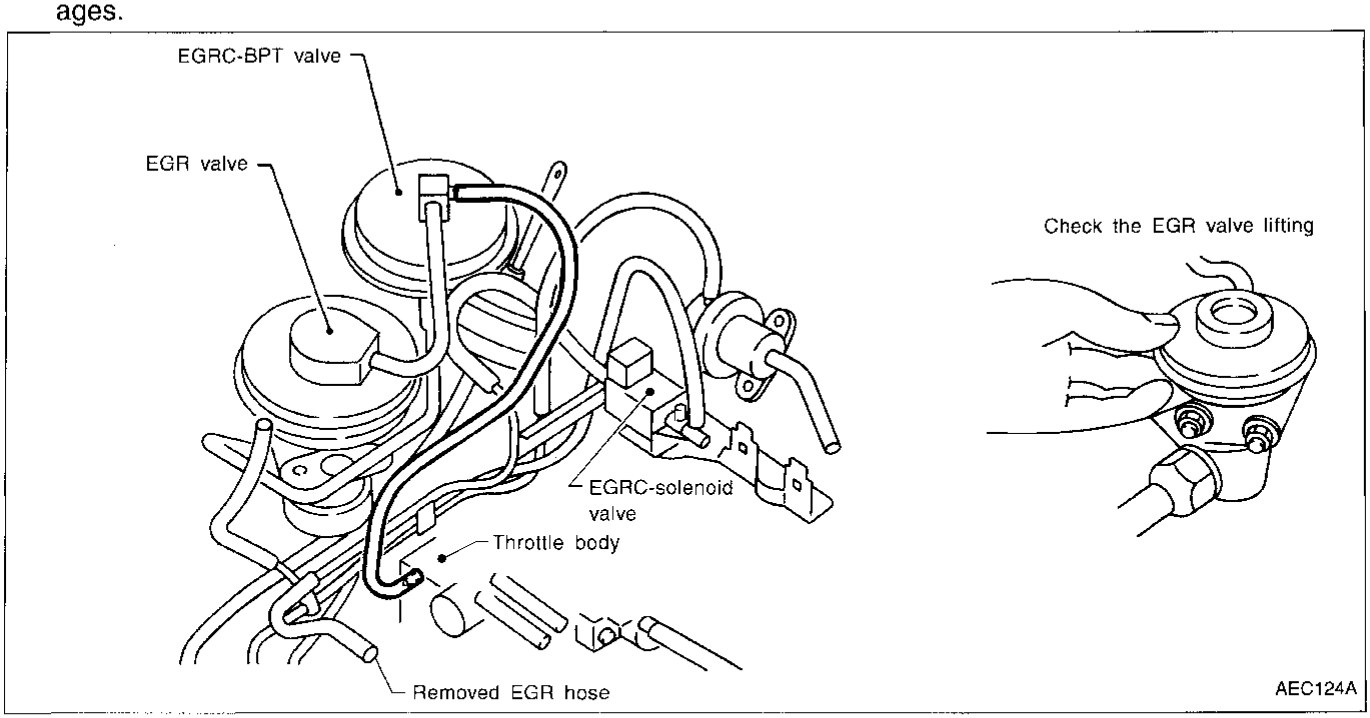

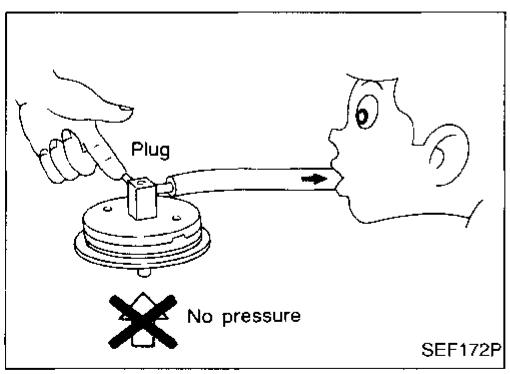

COMPONENT INSPECTION

EGRC-BPT valve

1) Plug one of two ports of EGRC-BPT valve.
2) Vacuum from the other port and check leakage without applying any pressure from under EGR-BPT valve.
   Leakage should exist.

Three Way Catalyst Function

ON BOARD DIAGNOSIS LOGIC

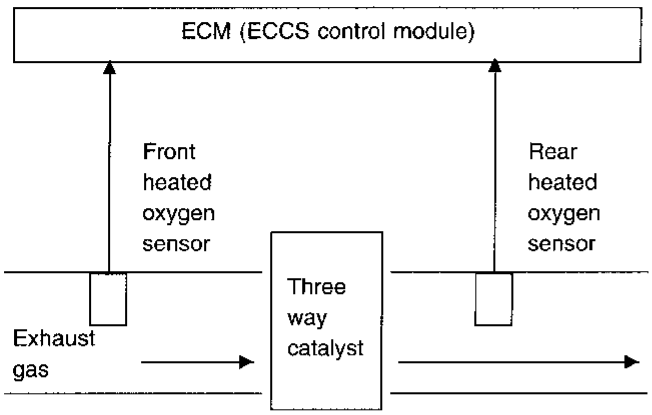

The ECM monitors the switching frequency ratio of front heated oxygen sensor and rear heated oxygen sensor.
A three way catalyst with high oxygen storage capacity will indicate a low switching frequency of rear heated oxygen sensor. As oxygen storage capacity decreases, the rear heated oxygen sensor switching frequency will increase.
When the frequency ratio of front heated oxygen sensor and rear heated oxygen sensor approaches a specified limit value, the three way catalyst malfunction is diagnosed.

Diagnostic Trouble Code No.	Malfunction is detected when ...	Check Items (Possible Cause)
P0420 0702	● Three way catalyst does not operate properly. ● Three way catalyst does not have enough oxygen storage capacity.	● Three way catalyst ● Exhaust tube ● Intake air leak ● Injectors ● Injector leak

OVERALL FUNCTION CHECK

Use this procedure to check the overall function of the three way catalyst. During this check, a 1st trip DTC might not be confirmed.

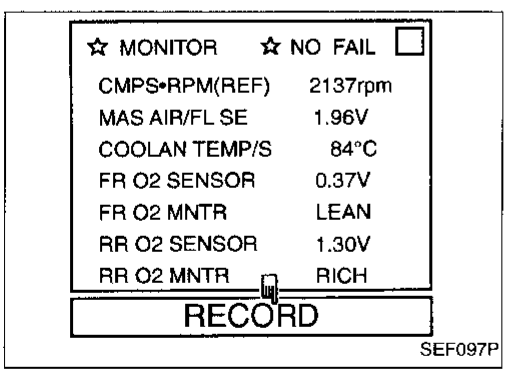

1) Start engine and warm it up sufficiently.
2) Set "MANU TRIG" and "HI SPEED", then select "FR O2 SENSOR", "RR O2 SENSOR", "FR O2 MNTR", "RR O2 MNTR" in "DATA MONITOR" mode with CONSULT.
3) Touch "RECORD" on CONSULT screen with engine speed held at 2,000 rpm constant under no load.
4) Make sure that the switching frequency between "RICH" and "LEAN" of "RR O2 MNTR" is much less than that of "FR O2 MNTR".

Switching frequency ratio =

$$\frac{\textbf{Rear heated oxygen sensor switching frequency}}{\textbf{Front heated oxygen sensor switching frequency}}$$

This ratio should be less than 0.6 (2WD models) and 0.8 (4WD models).
If the ratio is greater than above, the three way catalyst is not operating properly.

OR

Three Way Catalyst Function (Cont'd)

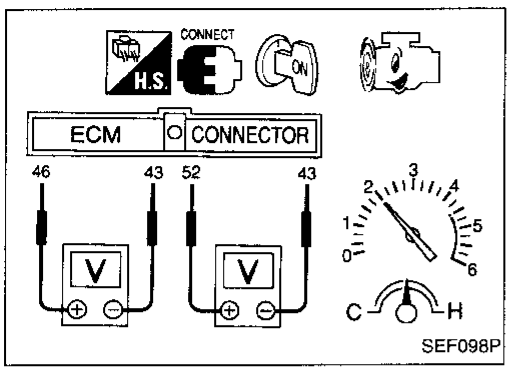

1) Start engine and warm it up sufficiently.
2) Set voltmeter probes between ECM terminals ㊻ (front heated oxygen sensor signal) and ㊸ (engine ground), and ECM terminals ㊷ (rear heated oxygen sensor signal) and ㊸ (engine ground).
3) Keep engine speed at 2,000 rpm constant under no load.
4) Make sure that the voltage switching frequency (high & low) between ECM terminals ㊷ and ㊸ is much less than that of ECM terminals ㊻ and ㊸.

Switching frequency ratio =

$$\frac{\textbf{Rear heated oxygen sensor voltage switching frequency}}{\textbf{Front heated oxygen sensor voltage switching frequency}}$$

This ratio should be less than 0.6 (2WD models) and 0.8 (4WD models).
If the ratio is greater than above, it means three way catalyst does not operate properly.

Note: If the voltage at terminal ㊻ does not switch periodically more than 5 times within 10 seconds at step 3, perform TROUBLE DIAGNOSIS FOR DTC P0130 (Front heated oxygen sensor) first. (See page EC-129.)

Three Way Catalyst Function (Cont'd)

DIAGNOSTIC PROCEDURE

A

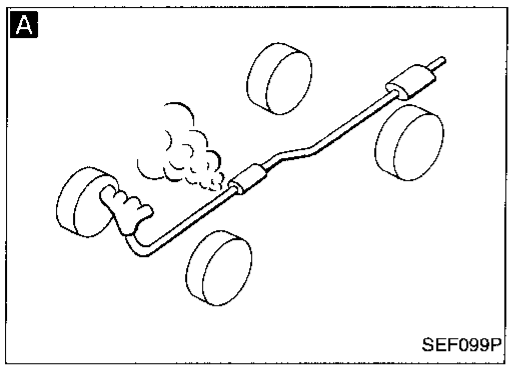

B

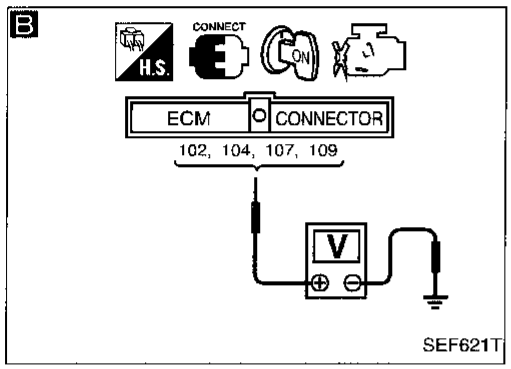

INSPECTION START

↓

CHECK EXHAUST SYSTEM.
Visually check exhaust tubes and muffler for dent.

NG → Repair or replace it.

OK ↓

A

CHECK EXHAUST AIR LEAK.
Start engine and run it at idle. Listen for an exhaust air leak before three way catalyst.

NG → Repair or replace.

OK ↓

CHECK INTAKE AIR LEAK.
Start engine and run it at idle. Listen for an intake air leak after mass air flow sensor.

NG → Repair or replace.

OK ↓

B

CHECK INJECTORS.
1. Refer to WIRING DIAGRAM for Injectors, EC-303.
2. Stop engine and then turn ignition switch "ON".
3. Check voltage between ECM terminals (102), (104), (107), or (109) and ground with CONSULT or tester.
   Battery voltage should exist.
4. Turn ignition switch "OFF".

NG → Perform TROUBLE DIAGNOSIS FOR NON-DETECTABLE ITEMS, "Injectors". (See page EC-303.) Repair harness or connectors.

OK ↓

Remove injector assembly.
Refer to EC-26.
Keep fuel hose and all injectors connected to injector gallery.

↓

1. Turn ignition switch "OFF".
2. Disconnect camshaft position sensor harness connector.
3. Turn ignition switch "ON".
   Make sure fuel does not drip from injector.

Drips → Replace the injectors from which fuel is dripping.

Does not drip. ↓

Check ECM pin terminals for damage and check the connection of ECM harness connector. Reconnect ECM harness connector and retest.

Trouble is not fixed → Replace three way catalyst.

Trouble is fixed. ↓

INSPECTION END

Evaporative Emission (EVAP) Control System (Small Leak)

Note: If both DTC P0440 and P0446 are displayed, perform TROUBLE DIAGNOSIS FOR P0446 first. (See EC-207.)

ON BOARD DIAGNOSIS LOGIC

This diagnosis uses two methods to detect leaks in the EVAP purge line.
The first method, the pressure test, makes use of vapor pressure in the fuel tank. The second method, the vacuum test, makes use of engine intake manifold vacuum.

Pressure test

The EVAP canister vent control valve is closed to shut the EVAP purge line. The vacuum cut valve bypass valve will then be opened to clear the line between the fuel tank and the EVAP canister purge control valve. The EVAP control system pressure sensor can now monitor the pressure inside the fuel tank.
If pressure increases, the ECM will check for leaks in the line between the vacuum cut valve and EVAP canister purge control valve. If no pressure does not increase, the ECM will perform the "Vacuum test".

Vacuum test

If pressure does not increase in the "Pressure test", the ECM will check for leaks in the line between the fuel tank and EVAP canister purge control valve, under the following "Vacuum test" conditions.
The vacuum cut valve bypass valve is opened to clear the line between the fuel tank and the EVAP canister purge control valve. The EVAP canister vent control valve will then be closed to shut the EVAP purge line off.
The EVAP canister purge volume control valve and EVAP canister purge control valve are opened to depressurize the EVAP purge line using intake manifold vacuum. After this occurs, the EVAP canister purge control valve and EVAP canister purge volume control valve will be closed.

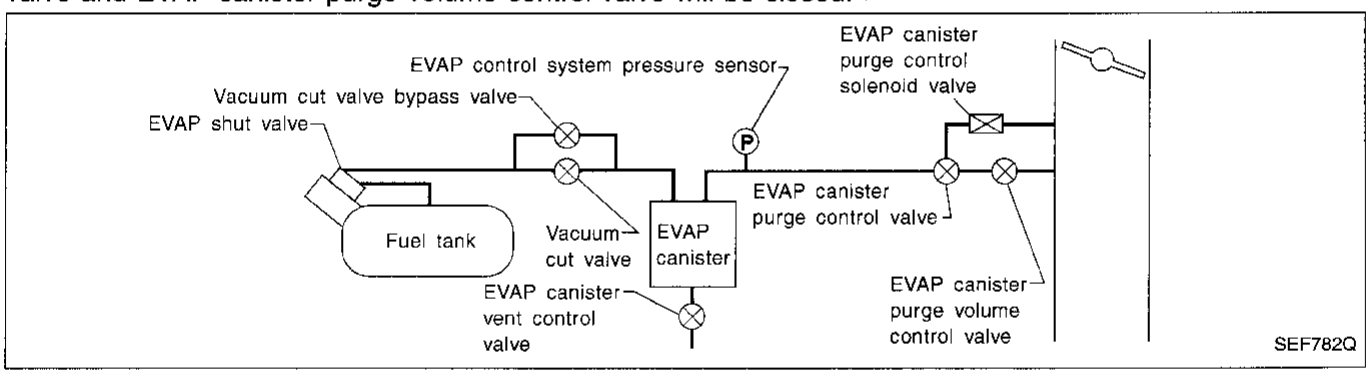

Evaporative Emission (EVAP) Control System (Small Leak) (Cont'd)

Diagnostic Trouble Code No.	Malfunction is detected when	Check Items (Possible Cause)
P0440 0705	• EVAP control system has a leak. • EVAP control system does not operate properly.	• Incorrect fuel tank vacuum relief valve • Incorrect fuel filler cap used • Fuel filler cap remains open or fails to close • Foreign matter caught in fuel filler cap • Leak is in line between intake manifold and EVAP canister purge control valve. • Foreign matter caught in EVAP canister vent control valve. • EVAP canister or fuel tank leaks • EVAP purge line (pipe and rubber tube) leaks • EVAP purge line rubber tube bent • Blocked or bent rubber tube to EVAP control system pressure sensor • Loose or disconnected rubber tube • EVAP canister purge control valve • EVAP canister purge volume control valve • EVAP canister purge control solenoid valve • Absolute pressure sensor • Tank fuel temperature sensor • MAP/BARO switch solenoid valve • Blocked or bent rubber tube to MAP/BARO switch solenoid valve • O-ring of EVAP canister vent control valve is missing or damaged

CAUTION:
- **Use only a genuine fuel filler cap as a replacement. If an incorrect fuel filler cap is used, the MIL may come on.**
- **If the fuel filler cap is not tightened properly, the MIL may come on.**
- **Use only a genuine rubber tube as a replacement.**

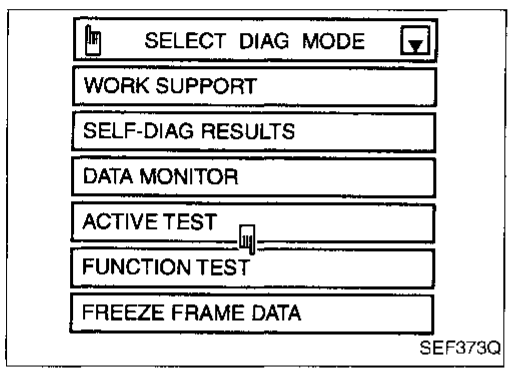

DIAGNOSTIC TROUBLE CODE CONFIRMATION PROCEDURE

CAUTION:
- **Always select "SINGLE TEST" with CONSULT when performing the "FUNCTION TEST".**
- **Perform "FUNCTION TEST" when the fuel level is less than 3/4 full. If not, inspect fuel filler cap and fuel tank separately. Refer to EC-193.**

1) Select "EVAP (SMALL LEAK)" in "FUNCTION TEST" mode with CONSULT.
2) Make sure that "OK" is displayed with "EVAP (SMALL LEAK)". (If "NG" is displayed, refer to "DIAGNOSTIC PROCEDURE".)
3) Check fuel filler cap and fuel tank when the fuel tank is more than 3/4 full.
   Refer to "DIAGNOSTIC PROCEDURE", EC-193.

Evaporative Emission (EVAP) Control System (Small Leak) (Cont'd)

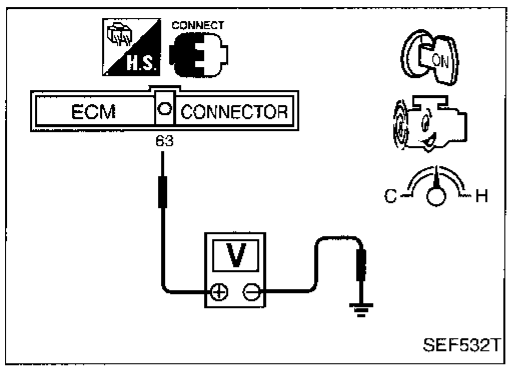

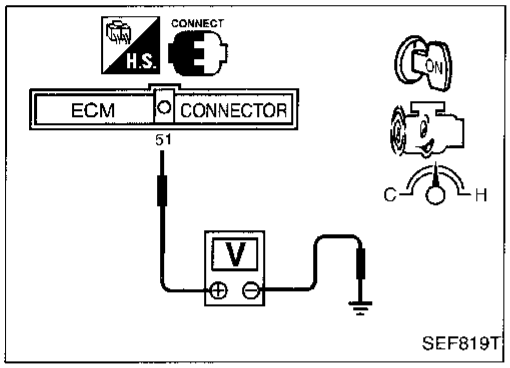

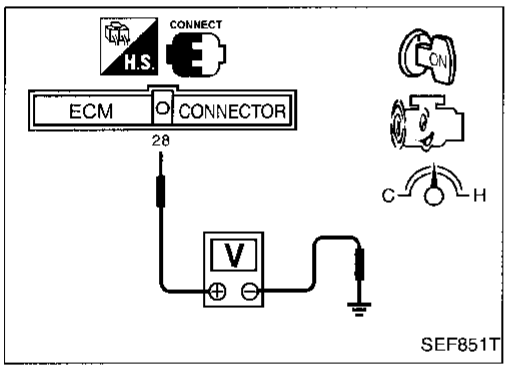

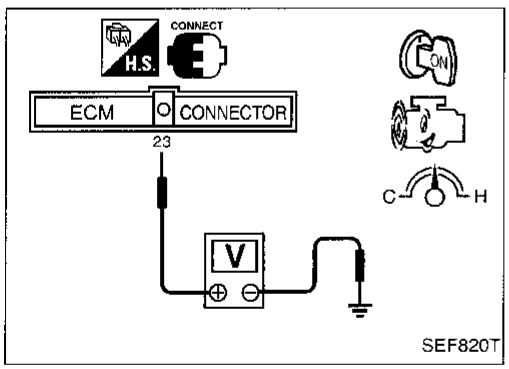

1) Start engine and warm it up sufficiently.
2) Check voltage between ECM terminal ⑥③ and ground (**Voltage 1**).
   Voltage: 1.9 - 4.2V
3) Check voltage between ECM terminal ⑤① and ground.
   Voltage: 0.8 - 1.5V
   Perform the following procedure before the voltage drops below 0.8V. If the voltage drops below 0.8V, cool down the engine and perform the entire procedure over again.
4) Check voltage between ECM terminal ②⑧ and ground.
   Voltage: 1.9 - 4.1V
5) Turn ignition switch "OFF" and wait at least 7 seconds.
6) Turn ignition switch "ON" and wait at least 12 seconds.
7) Restart engine and let it idle for at least 70 seconds.
8) Maintain the following conditions for at least 40 seconds consecutively.
   Gear position: Suitable gear position
   Vehicle speed: 50 - 70 km/h (31 - 43 MPH)
   Engine speed: 1,500 - 2,500 rpm
9) Decelerate the vehicle to 0 km/h and let engine idle.
10) Maintain the following conditions for at least 5 seconds consecutively.
    Gear position: "1" or "2" position
    Vehicle speed: 40 - 60 km/h (25 - 37 MPH)
    Engine speed: 1,500 - 2,500 rpm
11) Perform steps 9, 10 more than 10 times.
12) Decelerate the vehicle to 0 km/h and let engine idle.
13) Maintain the following condition for at least continuous 10 seconds.
    Gear position: Suitable gear position
    Vehicle speed: 40 - 80 km/h (25 - 50 MPH)
    Engine speed: 1,000 - 3,000 rpm
14) Decelerate the vehicle to 0 km/h and let engine idle, then wait at least 11 minutes.
15) Check voltage between ECM terminal ⑥③ and ground (**Voltage 2**).
    Voltage: 1.9 - 4.2V
16) Check voltage decrease between **voltage 1 and 2**.
    Voltage 1 – Voltage 2 ≧ 0.1V
17) Check voltage between ECM terminal ②③ and ground (**Voltage 3**).
    Voltage: 0.3 - 0.7V
18) Maintain the following conditions for 9 minutes measuring voltage between ECM terminal ②③ and ground (**Voltage 4**) after 12 minutes have passed from restarting engine in step 7.
    Gear position: Suitable gear position
    Vehicle speed: 20 - 80 km/h (12 - 50 MPH)
    Engine speed: 800 - 2,200 rpm (A/T models)
    800 - 3,000 rpm (M/T models)
    Voltage 4 - Voltage 3 ≦ 0.5V (2WD M/T)
    0.7V (2WD A/T)
    0.8V (4WD)
19) Stop the vehicle, turn ignition switch "OFF", wait at least 7 seconds, and then turn "ON".
20) Perform "Diagnostic Test Mode II (Self-diagnostic results)" with ECM.

Evaporative Emission (EVAP) Control System (Small Leak) (Cont'd)

NOTE:

- Hold the accelerator pedal as steady as possible during driving in steps 8, 10, 13 and 18.
- If the driving conditions do not conform to those specified in steps 8, 10, 13 and 18, the procedure must be performed again under the specified conditions.
- It is better that the fuel level is low.
- While warming up the engine or idling it for more than 30 seconds, keep the engine hood open. Close the engine hood before driving the vehicle.

Evaporative Emission (EVAP) Control System (Small Leak) (Cont'd)

DIAGNOSTIC PROCEDURE

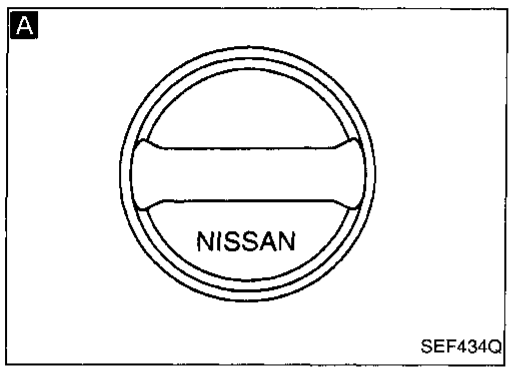

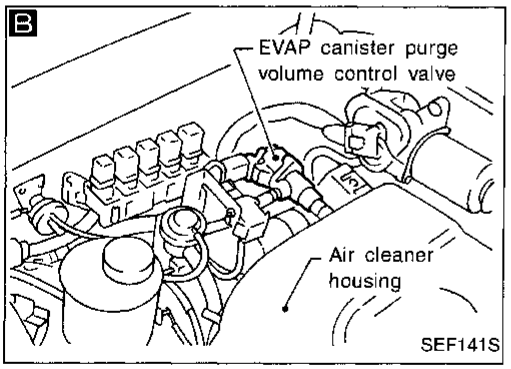

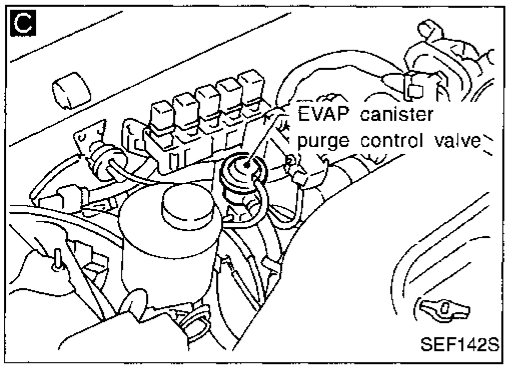

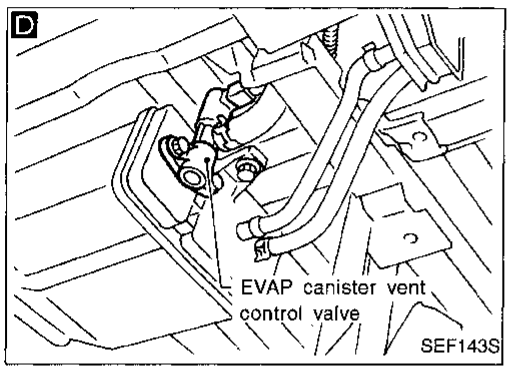

INSPECTION START

A

CHECK FUEL FILLER CAP.
1. Check that fuel filler cap does not remain open, closes properly and does not contain foreign matter.
2. Check for genuine fuel filler cap design.
3. Check fuel tank vacuum relief valve. Refer to "EVAPORATIVE EMISSION SYSTEM", EC-20.

NG → 1. Open fuel filler cap, then clean cap and fuel filler neck threads using air blower. 2. Replace with genuine fuel filler cap.

OK ↓

B

CHECK COMPONENT
(EVAP canister purge volume control valve).
Refer to "COMPONENT INSPECTION", EC-196.

NG → Replace EVAP canister purge volume control valve.

OK ↓

C

CHECK COMPONENT
(EVAP canister purge control valve).
Refer to "COMPONENT INSPECTION", EC-197.

NG → Replace EVAP canister purge control valve.

OK ↓

D

CHECK COMPONENT
(EVAP canister vent control valve).
Refer to "COMPONENT INSPECTION", EC-197.

NG → Replace EVAP canister vent control valve.

OK ↓

Ⓐ
(Go to next page.)

Evaporative Emission (EVAP) Control System (Small Leak) (Cont'd)

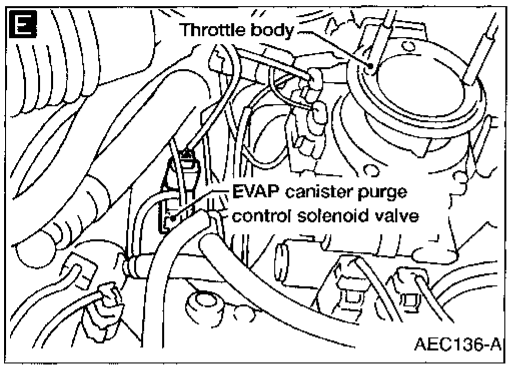

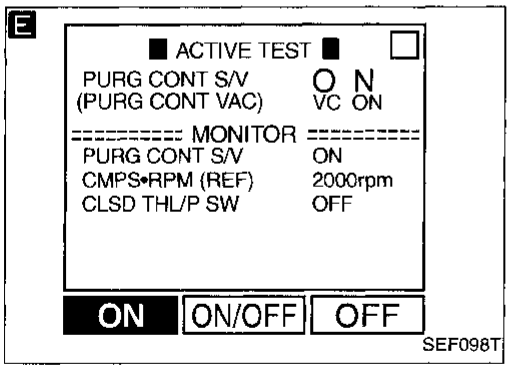

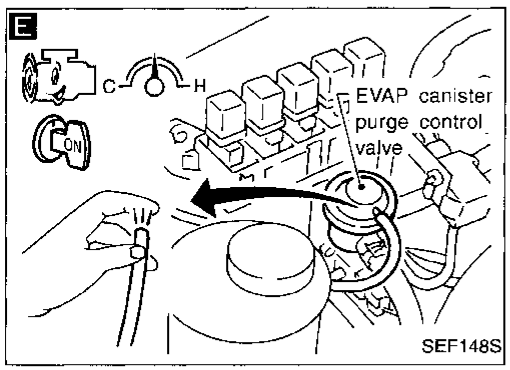

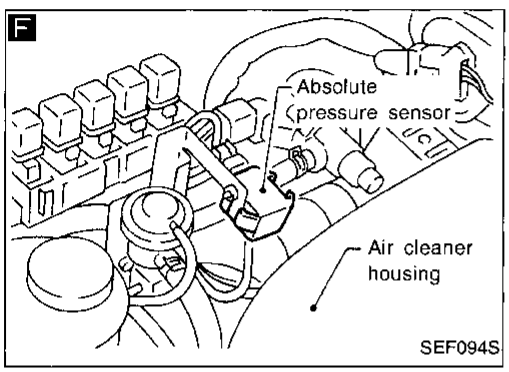

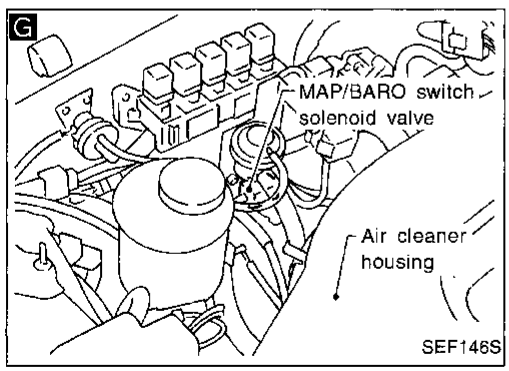

Ⓐ

E

CHECK COMPONENT (EVAP canister purge control solenoid valve).

1. Disconnect vacuum hose to EVAP canister purge control valve.
2. Start engine.
3. Perform "PURG CONT S/V" in "ACTIVE TEST" mode.
4. Select "ON" on CONSULT screen to turn on "PURG CONT S/V".
5. Check vacuum hose for vacuum when revving engine up to 2,000 rpm.
   Vacuum should exist.

OR

1. Start engine and warm it up sufficiently.
2. Stop engine.
3. Lift up the vehicle.
4. Disconnect vacuum hose to EVAP canister purge control valve.
5. Start engine.
6. Check vacuum hose for vacuum when revving engine up to 2,000 rpm.
   Vacuum should exist.

NG → Check the following.
- EVAP canister purge control solenoid valve
  Refer to "COMPONENTS INSPECTION", EC-197.
- Vacuum hoses for clogging or disconnection
  Refer to "Vacuum Hose Drawing", EC-22.

OK ↓

F

CHECK COMPONENT
(Absolute pressure sensor).
Refer to "COMPONENT INSPECTION", EC-197.

NG → Replace absolute pressure sensor.

OK ↓

G

CHECK COMPONENT
(MAP/BARO switch solenoid valve).
Refer to "COMPONENT INSPECTION", EC-198.

NG → Replace MAP/BARO switch solenoid valve.

OK ↓

Ⓑ

(Go to next page.)

Evaporative Emission (EVAP) Control System (Small Leak) (Cont'd)

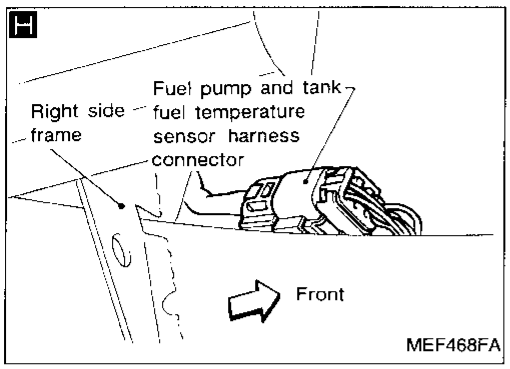

Ⓑ

H

CHECK COMPONENT
(Tank fuel temperature sensor).
Refer to "COMPONENT INSPECTION", EC-198.

NG → Replace tank fuel temperature sensor.

OK ↓

CHECK EVAP PURGE LINE.
Check EVAP purge line (pipe, rubber tube, fuel tank and EVAP canister) for cracks or improper connection.
Refer to "EVAPORATIVE EMISSION SYSTEM," EC-20.

NG → Repair or reconnect the hose.

OK ↓

Clean EVAP purge line (pipe and rubber tube) using air blower.

↓

Disconnect and reconnect harness connectors in the circuit. Then retest.

Trouble is not fixed. ↓

Check ECM pin terminals for damage and check the connection of ECM harness connector. Reconnect ECM harness connector and retest.

↓

INSPECTION END

Evaporative Emission (EVAP) Control System (Small Leak) (Cont'd)

COMPONENT INSPECTION

EVAP canister purge volume control valve

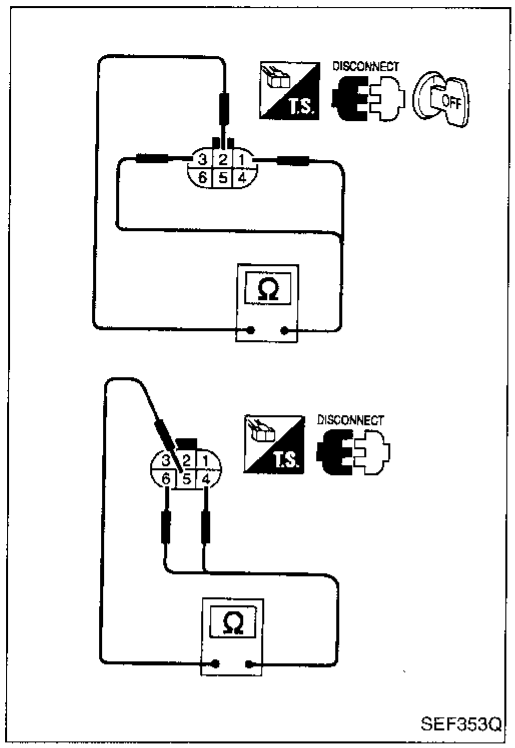

SEF353Q

1. Disconnect EVAP canister purge volume control valve harness connector.
2. Check resistance between the following terminals.
   terminal ② and terminals ①, ③
   terminal ⑤ and terminals ④, ⑥
   Resistance:
   Approximately 30Ω [At 25°C (77°F)]
3. Reconnect EVAP canister purge volume control valve harness connector.
4. Remove EVAP canister purge volume control valve from intake manifold collector and disconnect hoses from the valve.
   (Plug the purge hoses. The EVAP canister purge volume control valve harness connector should remain connected.)
5. Turn ignition switch "ON".
6. Perform "PURG VOL CONT/V" in "ACTIVE TEST" mode with CONSULT. Check that EVAP canister purge volume control valve shaft moves smoothly forward and backward according to the valve opening.
   If NG, replace the EVAP canister purge volume control valve.

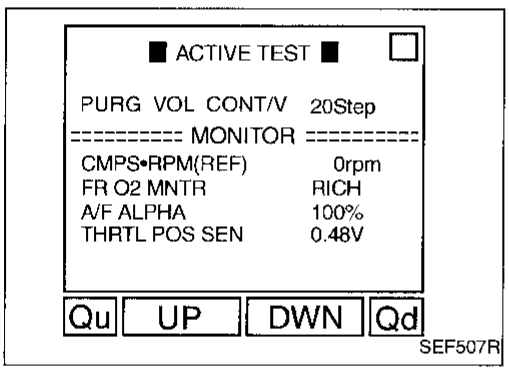

SEF507R

OR

1. Disconnect EVAP canister purge volume control valve harness connector.
2. Check resistance between the following terminals.
   terminal ② and terminals ①, ③
   terminal ⑤ and terminals ④, ⑥
   Resistance:
   Approximately 30Ω [At 25°C (77°F)]
3. Reconnect EVAP canister purge volume control valve harness connector.
4. Remove EVAP canister purge volume control valve from intake manifold collector and disconnect hoses from the valve.
   (Plug the purge hoses. The EVAP canister purge volume control valve harness connector should remain connected.)
5. Turn ignition switch "ON" and "OFF". Check that EVAP canister purge volume control valve shaft moves smoothly forward and backward according to the ignition switch position.
   If NG, replace the EVAP canister purge volume control valve.

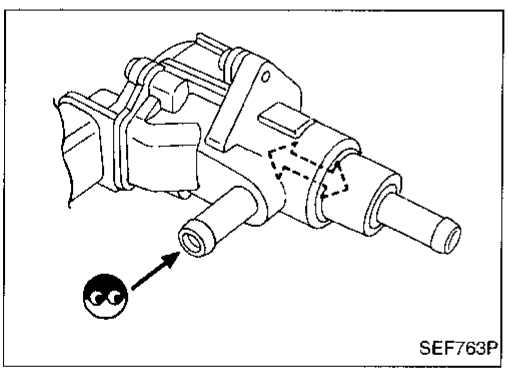
SEF763P

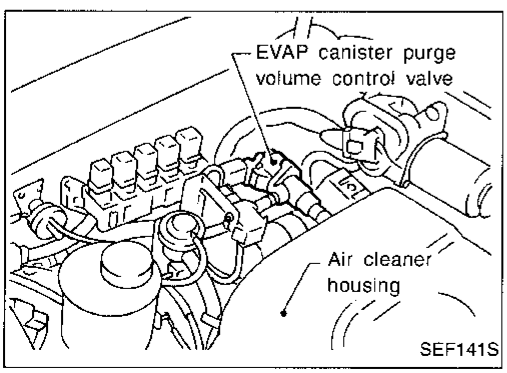

SEF141S

Evaporative Emission (EVAP) Control System (Small Leak) (Cont'd)

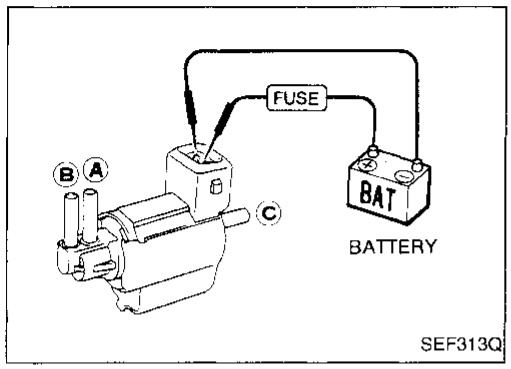

EVAP canister purge control solenoid valve

Check air passage continuity.

Condition	Air passage continuity between Ⓐ and Ⓑ	Air passage continuity between Ⓐ and Ⓒ
12V direct current supply between terminals	Yes	No
No supply	No	Yes

If NG, replace solenoid valve.

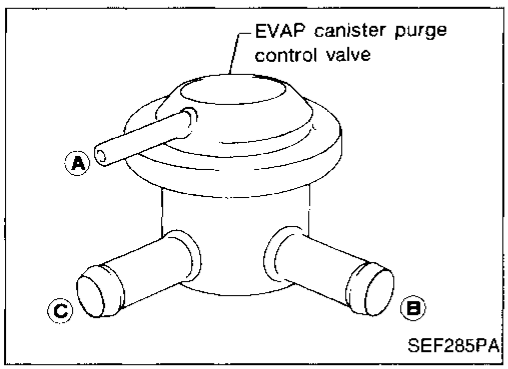

EVAP canister purge control valve

Check EVAP canister purge control valve as follows:

1. Plug the port Ⓑ.
2. Apply pressure [80.0 kPa (600 mmHg, 23.62 inHg, 11.60 psi)] to port Ⓐ. Then keep it for 15 seconds, and check there is no leakage.
3. Repeat step 2 for port Ⓒ.

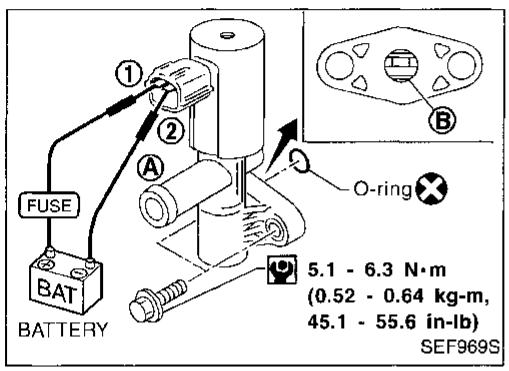

EVAP canister vent control valve

Check air passage continuity.

Condition	Air passage continuity between Ⓐ and Ⓑ
12V direct current supply between terminals ① and ②	No
No supply	Yes

If NG, clean valve using air blower or replace as necessary.
Make sure new O-ring is installed properly.

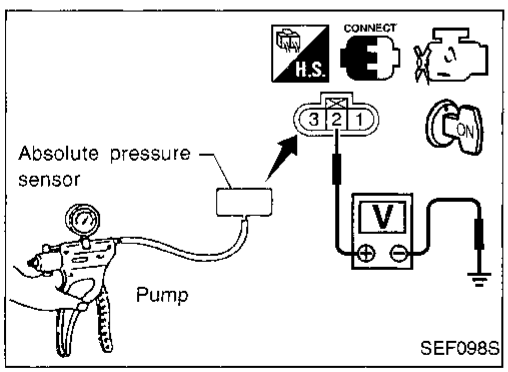

Absolute pressure sensor

1. Remove absolute pressure sensor from bracket with its harness connector connected.
2. Remove hose from absolute pressure sensor.
3. Turn ignition switch "ON" and check output voltage between terminal ② and engine ground.
   The voltage should be 3.2 to 4.8 V.
4. Use pump to apply vacuum of −26.7 kPa (−200 mmHg, −7.87 inHg, −3.87 psi) to absolute pressure sensor as shown in figure and check the output voltage.
   The voltage should be 1.0 to 1.4 V lower than the value measured in step 3.

Evaporative Emission (EVAP) Control System (Small Leak) (Cont'd)

CAUTION:
Always calibrate the vacuum pump gauge when using it.

5. If NG, replace absolute pressure sensor.

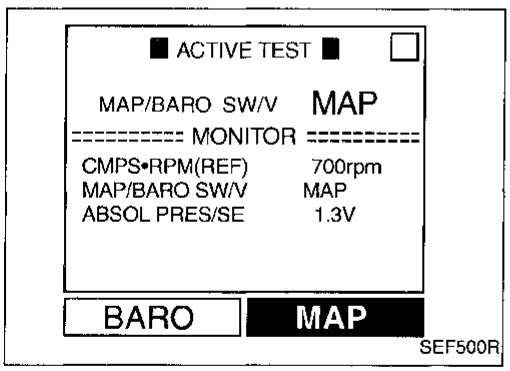

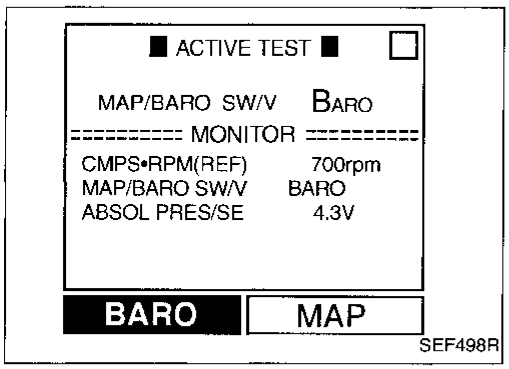

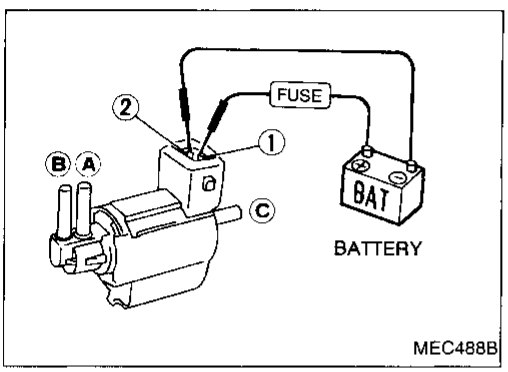

MAP/BARO switch solenoid valve

1. Start engine and warm it up sufficiently.
2. Perform "MAP/BARO SW/V" in "ACTIVE TEST" mode with CONSULT.
3. Check the following.
   - When "MAP" is selected, "ABSOL PRES/SE" indicates approximately 1.3V.
   - When "BARO" is selected, "ABSOL PRES/SE" indicates approximately 4.3V.
4. If NG, replace solenoid valve.

OR

1. Remove MAP/BARO switch solenoid valve.
2. Check air passage continuity.

Condition	Air passage continuity between Ⓐ and Ⓑ	Air passage continuity between Ⓐ and Ⓒ
12V direct current supply between terminals ① and ②	Yes	No
No supply	No	Yes

3. If NG, replace solenoid valve.

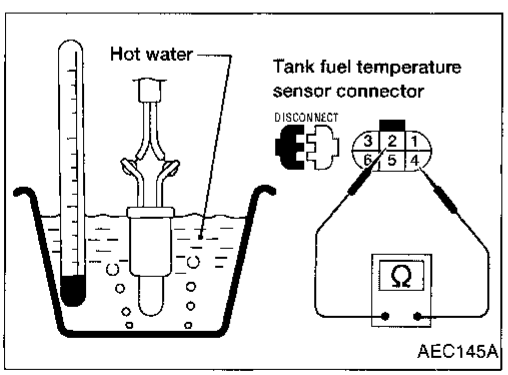

Tank fuel temperature sensor

Check resistance by heating with hot water or heat gun as shown in the figure.

⟨Reference data⟩

Temperature °C (°F)	Resistance kΩ
20 (68)	2.3 - 2.7
50 (122)	0.79 - 0.90

If NG, replace tank fuel temperature sensor.

Evaporative Emission (EVAP) Canister Purge Control Valve/Solenoid Valve

SYSTEM DESCRIPTION

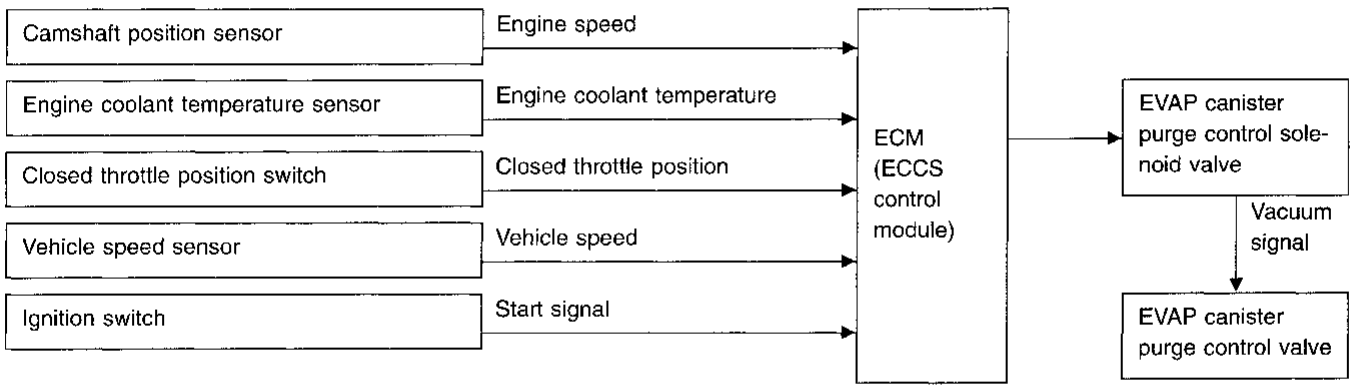

This system controls the vacuum signal applied to the EVAP canister purge control valve.
When the ECM detects any of the following conditions, current does not flow through the EVAP canister purge control solenoid valve.
The solenoid valve cuts the vacuum signal so that the EVAP canister purge control valve remains closed.

- Ignition switch "START"
- Closed throttle position
- Low or high engine coolant temperature
- During deceleration
- Engine stopped
- Low vehicle speed (M/T models)

ECM TERMINALS AND REFERENCE VALUE

Specification data are reference values and are measured between each terminal and 43 (ECCS ground).

TERMINAL NO.	WIRE COLOR	ITEM	CONDITION	DATA (DC voltage)
105	W/R	EVAP canister purge control solenoid valve	Engine is running. └ Idle speed	BATTERY VOLTAGE (11 - 14V)

CONSULT REFERENCE VALUE IN DATA MONITOR MODE

Specification data are reference values.

MONITOR ITEM	CONDITION		SPECIFICATION
PURG CONT S/V	● Engine: After warming up	Idle	OFF
		2,000 rpm	ON

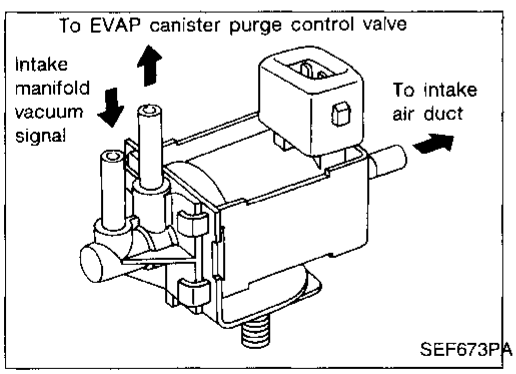

COMPONENT DESCRIPTION

EVAP canister purge control solenoid valve

The EVAP canister purge control solenoid valve responds to signals from the ECM. When the ECM sends an OFF signal, the vacuum signal (from the intake manifold to the EVAP canister purge control valve) is cut.
When the ECM sends an ON (ground) signal, the vacuum signal passes through the EVAP canister purge control solenoid valve. The signal then opens the EVAP canister purge control valve.

Evaporative Emission (EVAP) Canister Purge Control Valve/Solenoid Valve (Cont'd)

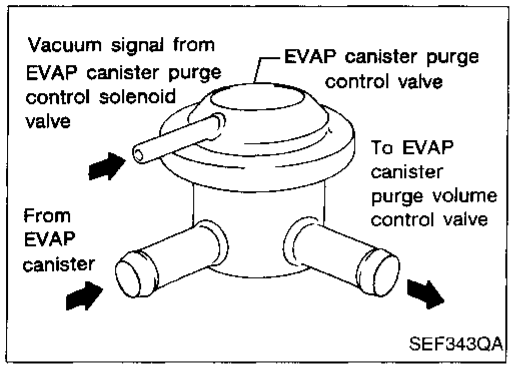

EVAP canister purge control valve

When the vacuum signal is cut by EVAP canister purge control solenoid valve, EVAP canister purge control valve closes.

EVAPORATIVE EMISSION SYSTEM DIAGRAM

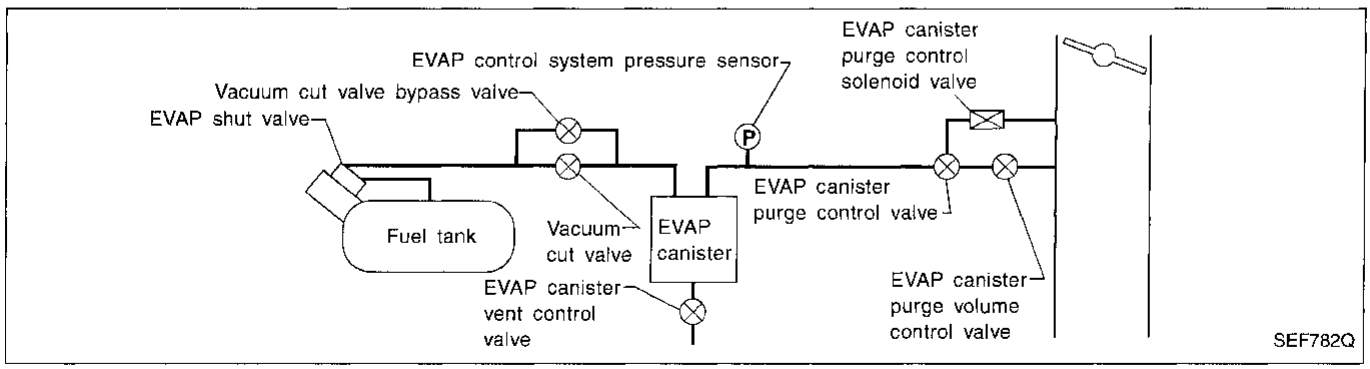

Diagnostic Trouble Code No.	Malfunction is detected when	Check Items (Possible Cause)
P0443 0807	A) An improper voltage signal is sent to ECM through EVAP canister purge control solenoid valve.	● Harness or connectors (The EVAP canister purge control solenoid valve circuit is open or shorted.) ● EVAP canister purge control solenoid valve
	B) EVAP canister purge control valve does not operate properly (stuck open).	● EVAP canister purge control valve ● EVAP canister purge control solenoid valve ● Vacuum hoses for clogging or disconnection ● EVAP control system pressure sensor

DIAGNOSTIC TROUBLE CODE CONFIRMATION PROCEDURE

Perform "Procedure for malfunction A" first. If the 1st trip DTC cannot be confirmed, perform "Procedure for malfunction B" on next page.

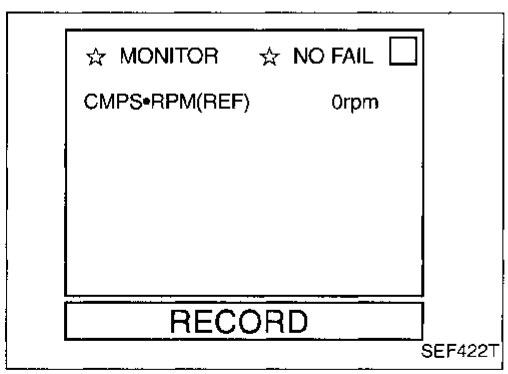

Procedure for malfunction A

1) Turn ignition switch "ON".
2) Select "DATA MONITOR" mode with CONSULT.
3) Wait at least 5 seconds.

OR

1) Turn ignition switch "ON" and wait at least 5 seconds.
2) Select "MODE 7" with GST.

OR

1) Turn ignition switch "ON" and wait at least 5 seconds.
2) Turn ignition switch "OFF", wait at least 7 seconds and then turn "ON".
3) Perform "Diagnostic Test Mode II (Self-diagnostic results)" with ECM.

Evaporative Emission (EVAP) Canister Purge Control Valve/Solenoid Valve (Cont'd)

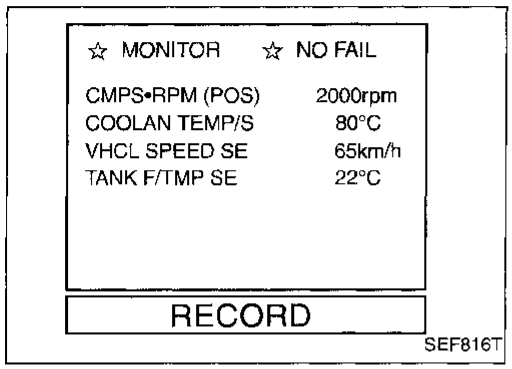

Procedure for malfunction B

1) Lift up vehicle.
2) Turn ignition switch "ON" and select "DATA MONITOR" mode with CONSULT.
3) Start engine and warm it up sufficiently.
4) Check that tank fuel temperature is above 0°C (32°F).
5) Turn ignition switch "OFF" and wait at least 7 seconds.
6) Turn ignition switch "ON" and wait at least 12 seconds.
7) Start engine and let it idle for at least 70 seconds.
8) Maintain the following conditions for at least 10 seconds.

Gear position:
"2" or "D" range (A/T)
"3rd" or "4th" gear (M/T)
Vehicle speed:
50 - 80 km/h (31 - 50 MPH)
Engine speed:
1,500 - 2,500 rpm
Coolant temperature:
Less than 100°C (212°F)

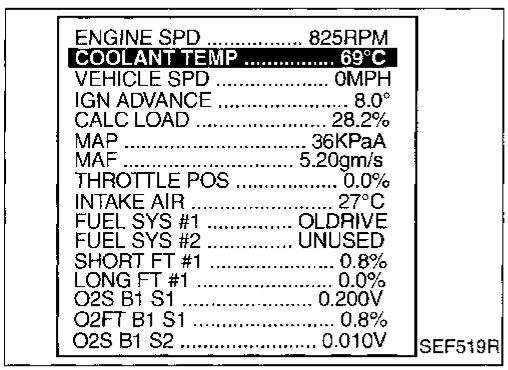

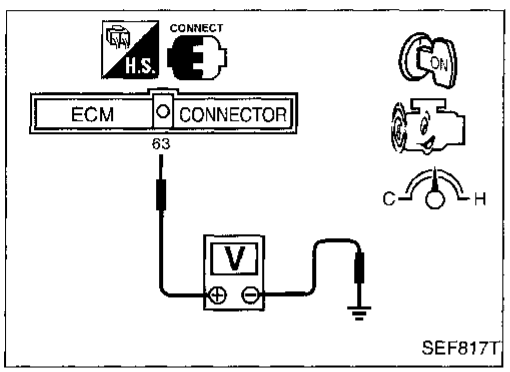

OR

1) Lift up vehicle.
2) Turn ignition switch "ON" and select "MODE 1" with GST.
3) Start engine and warm it up sufficiently.
4) Check that voltage between ECM terminal 63 and ground is less than 4.2V.
5) Turn ignition switch "OFF" and wait at least 7 seconds.
6) Turn ignition switch "ON" and wait at least 12 seconds.
7) Start engine and let it idle for at least 70 seconds.
8) Maintain the following conditions for at least 10 seconds.

Gear position:
"2" or "D" range (A/T)
"3rd" or "4th" gear (M/T)
Vehicle speed:
50 - 80 km/h (31 - 50 MPH)
Engine speed:
1,500 - 2,500 rpm
Coolant temperature:
Less than 100°C (212°F)

9) Select "MODE 7" with GST.

Evaporative Emission (EVAP) Canister Purge Control Valve/Solenoid Valve (Cont'd)

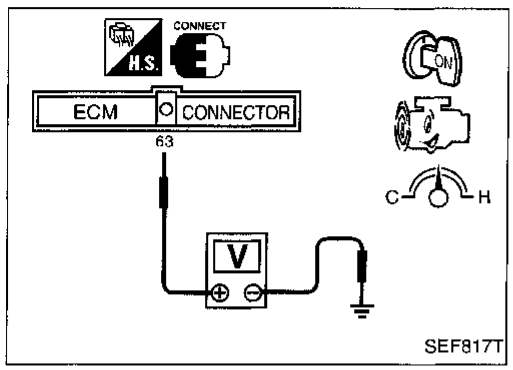

OR

NO TOOLS

1) Lift up vehicle.
2) Start engine and warm it up sufficiently.
3) Check that voltage between ECM terminal ⑥③ and ground is less than 4.2V.
4) Turn ignition switch "OFF" and wait at least 7 seconds.
5) Turn ignition switch "ON" and wait at least 12 seconds.
6) Start engine and let it idle for at least 70 seconds.
7) Maintain the following conditions for at least 10 seconds.

   Gear position:
   "2" or "D" range (A/T)
   "3rd" or "4th" gear (M/T)
   Vehicle speed:
   50 - 80 km/h (31 - 50 MPH)
   Engine speed:
   1,500 - 2,500 rpm
   Voltage between ECM terminal ⑤① and ground:
   More than 0.8V

8) Turn ignition switch "OFF", wait at least 7 seconds and then turn "ON".
9) Perform "Diagnostic Test Mode II (Self-diagnostic results)" with ECM.

Evaporative Emission (EVAP) Canister Purge Control Valve/Solenoid Valve (Cont'd)

EC-CANI/V-01

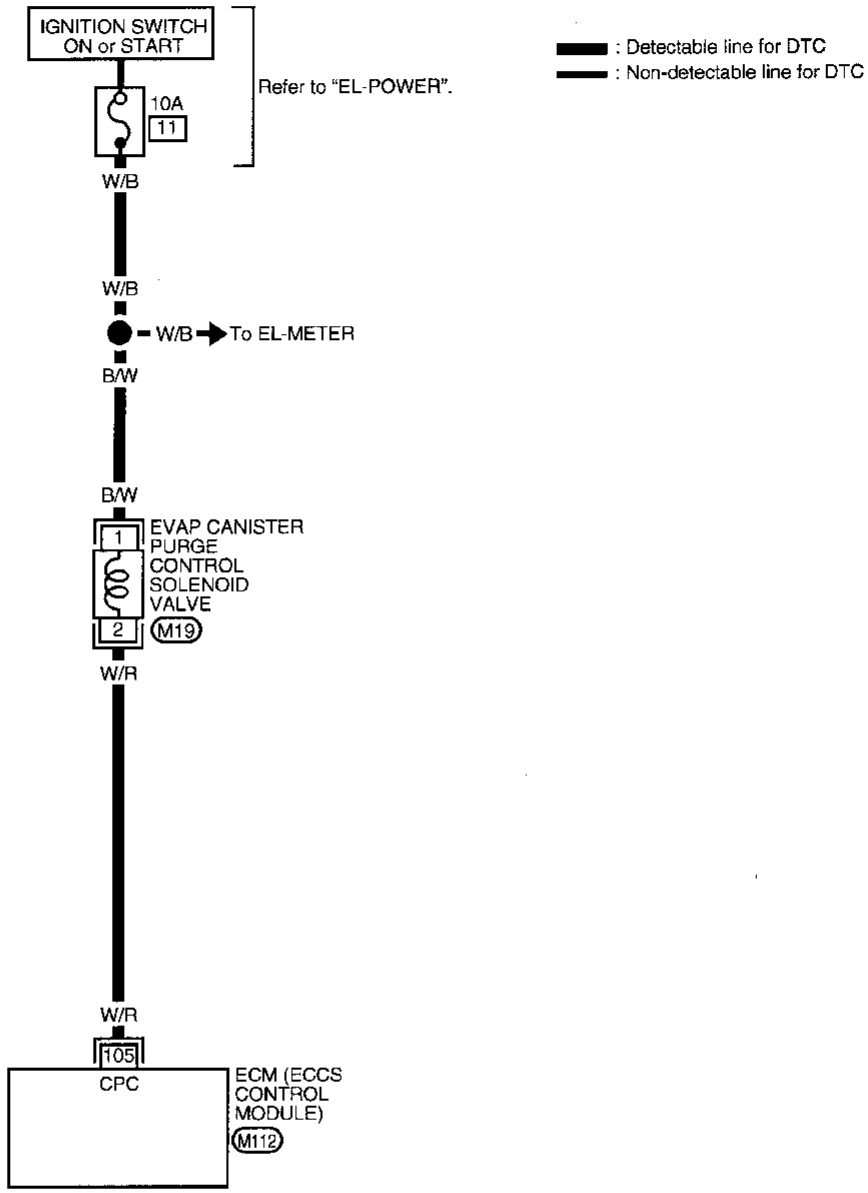

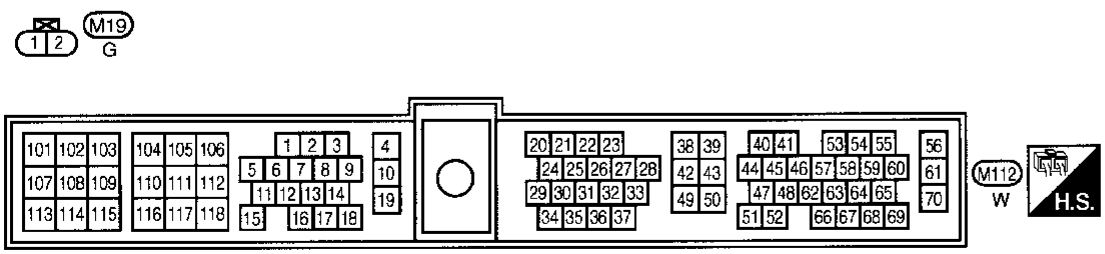

AEC310A

Evaporative Emission (EVAP) Canister Purge Control Valve/Solenoid Valve (Cont'd)

DIAGNOSTIC PROCEDURE

Procedure for malfunction A

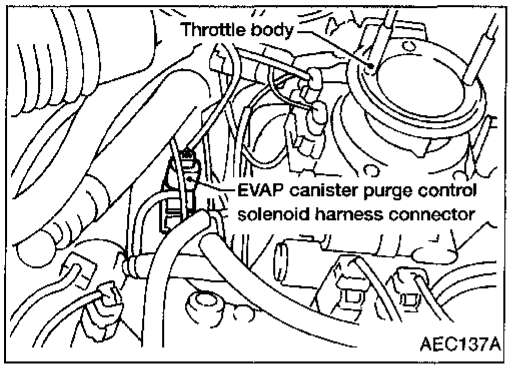

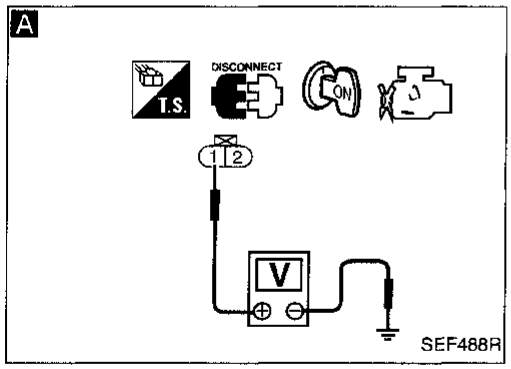

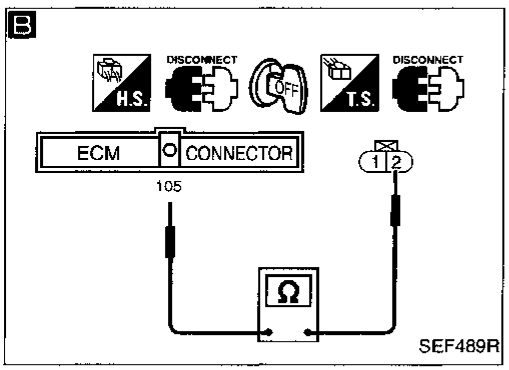

INSPECTION START

↓

A

CHECK POWER SUPPLY.
1. Disconnect EVAP canister purge control solenoid valve harness connector.
2. Turn ignition switch "ON".
3. Check voltage between terminal ① and ground with CONSULT or tester.
Voltage: Battery voltage

NG → Check the following.
- 10A fuse
- Harness for open or short between EVAP canister purge control solenoid valve and fuse

If NG, repair harness or connectors.

OK ↓

B

CHECK OUTPUT SIGNAL CIRCUIT.
1. Turn ignition switch "OFF".
2. Disconnect ECM harness connector.
3. Check harness continuity between ECM terminal (105) and terminal ②.
Continuity should exist.
If OK, check harness for short.

NG → Repair harness or connectors.

OK ↓

CHECK COMPONENT
(EVAP canister purge control solenoid valve).
Refer to "COMPONENT INSPECTION", EC-206.

NG → Replace EVAP canister purge control solenoid valve.

OK ↓

Disconnect and reconnect harness connectors in the circuit. Then retest.

Trouble is not fixed. ↓

Check ECM pin terminals for damage and check the connection of ECM harness connector. Reconnect ECM harness connector and retest.

↓

INSPECTION END

Evaporative Emission (EVAP) Canister Purge Control Valve/Solenoid Valve (Cont'd)

Procedure for malfunction B

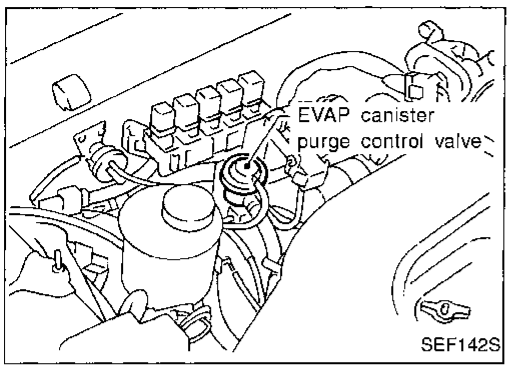

A

■ ACTIVE TEST ■

PURG CONT S/V (PURG CONT VAC)	ON VC ON
========== MONITOR ==========	
PURG CONT S/V	ON
CMPS•RPM (REF)	2000rpm
CLSD THL/P SW	OFF

ON | ON/OFF | OFF

SEF098T

A

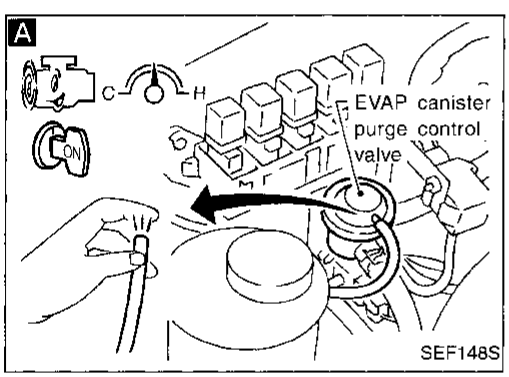

INSPECTION START

A

CHECK VACUUM SIGNAL.

1. Disconnect vacuum hose to EVAP canister purge control valve.
2. Start engine.
3. Perform "PURG CONT S/V" in "ACTIVE TEST" mode.
4. Select "ON" on CONSULT screen to turn on "PURG CONT S/V".
5. Check vacuum hose for vacuum when revving engine up to 2,000 rpm.
   Vacuum should exist.

OR

1. Start engine and warm it up sufficiently.
2. Stop engine.
3. Lift up vehicle.
4. Disconnect vacuum hose to EVAP canister purge control valve.
5. Start engine.
6. Check vacuum hose for vacuum when revving engine up to 2,000 rpm.
   Vacuum should exist.

NG → CHECK COMPONENTS (EVAP canister purge control solenoid valve). Refer to "COMPONENTS INSPECTION" on next page.

OK → Check vacuum hoses for clogging or disconnection. Refer to "Vacuum Hose Drawing", EC-13.

OK ↓

CHECK COMPONENT (EVAP canister purge control valve). Refer to "COMPONENT INSPECTION" on next page.

NG → Replace EVAP canister purge control valve.

OK ↓

Go to "TROUBLE DIAGNOSIS FOR DTC P0450", "EVAP Control System Pressure Sensor", EC-212.

OK ↓

CHECK EVAPORATIVE EMISSION LINE. Check EVAP purge line hoses for leak or clogging. Refer to "Evaporative Emission Line Drawing", EC-22.

NG → Repair EVAP purge line hoses.

OK ↓

INSPECTION END

Evaporative Emission (EVAP) Canister Purge Control Valve/Solenoid Valve (Cont'd)

COMPONENT INSPECTION

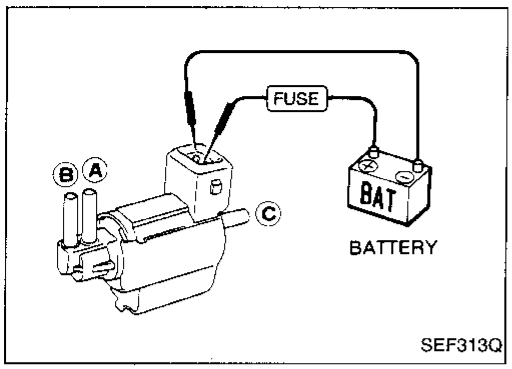

EVAP canister purge control solenoid valve

Check air passage continuity.

Condition	Air passage continuity between Ⓐ and Ⓑ	Air passage continuity between Ⓐ and Ⓒ
12V direct current supply between terminals	Yes	No
No supply	No	Yes

If NG, replace solenoid valve.

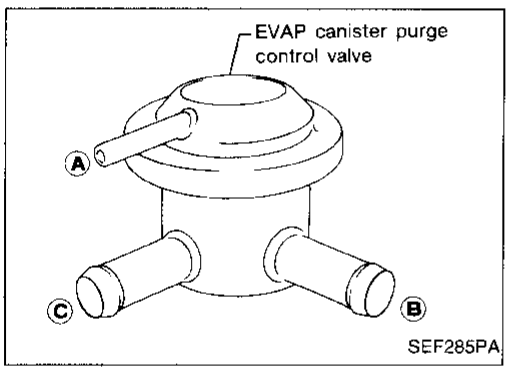

EVAP canister purge control valve

Check EVAP canister purge control valve as follows.

1. Plug the port Ⓑ.
2. Apply pressure [80.0 kPa (600 mmHg, 23.62 inHg, 11.60 psi)] to port Ⓐ. Then keep it for 15 seconds, and check there is no leakage.
3. Repeat step 2 for port Ⓒ.

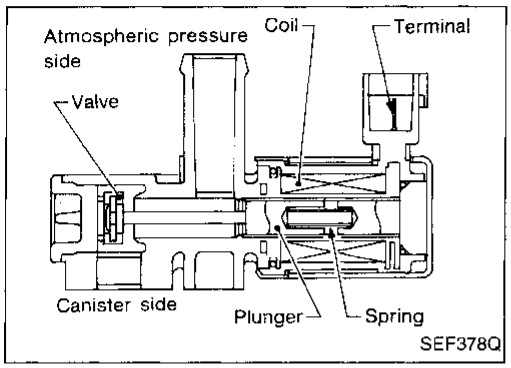

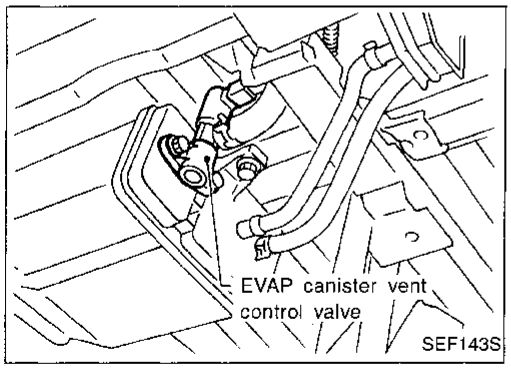

Evaporative Emission (EVAP) Canister Vent Control Valve

Note: If both DTC P0440 and P0446 are displayed, perform TROUBLE DIAGNOSIS FOR P0446 first.

COMPONENT DESCRIPTION

The EVAP canister vent control valve is located on the EVAP canister and is used to seal the canister vent.
This solenoid (the EVAP canister vent control valve) responds to signals from the ECM.
When the ECM sends an ON signal, the coil in the solenoid valve is energized.
A plunger will then move to seal the canister vent. The ability to seal the vent is necessary for the on board diagnosis of other evaporative loss system components.
This solenoid valve is used only for diagnosis, and usually remains opened.
When the vent is closed, under normal purge conditions, the evaporative loss system is depressurized and allows "EVAP Control System (Small Leak)" diagnosis.

ECM TERMINALS AND REFERENCE VALUE

Specification data are reference values and are measured between each terminal and ㊸ (ECCS ground).

TERMINAL NO.	WIRE COLOR	ITEM	CONDITION	DATA (DC voltage)
108	R	EVAP canister vent control valve	Ignition switch "ON"	BATTERY VOLTAGE (11 - 14V)

CONSULT REFERENCE VALUE IN DATA MONITOR MODE

Specification data are reference values

MONITOR ITEM	CONDITION	SPECIFICATION
VENT CONT/V	• Ignition switch: ON	OFF

ON BOARD DIAGNOSIS LOGIC

Diagnostic Trouble Code No.	Malfunction is detected when	Check Items (Possible Cause)
P0446 0903	A) An improper voltage signal is sent to ECM through EVAP canister vent control valve.	• Harness or connectors (EVAP canister vent control valve circuit is open or shorted.)
	B) EVAP canister vent control valve does not operate properly.	• EVAP canister vent control valve • EVAP control system pressure sensor • Blocked rubber tube to EVAP canister vent control valve

Evaporative Emission (EVAP) Canister Vent Control Valve (Cont'd)

DIAGNOSTIC TROUBLE CODE CONFIRMATION PROCEDURE

Perform "Procedure for malfunction A". If the 1st trip DTC cannot be confirmed, perform "Procedure for malfunction B" on next page.

Procedure for malfunction A

1) Turn ignition switch "ON".
2) Select "DATA MONITOR" mode with CONSULT.
3) Start engine and wait at least 5 seconds.

OR

1) Start engine and wait at least 5 seconds.
2) Select "MODE 7" with GST.

OR

1) Start engine and wait at least 5 seconds.
2) Turn ignition switch "OFF", wait at least 7 seconds and then turn "ON".
3) Perform "Diagnostic Test Mode II (Self-diagnostic results)" with ECM.

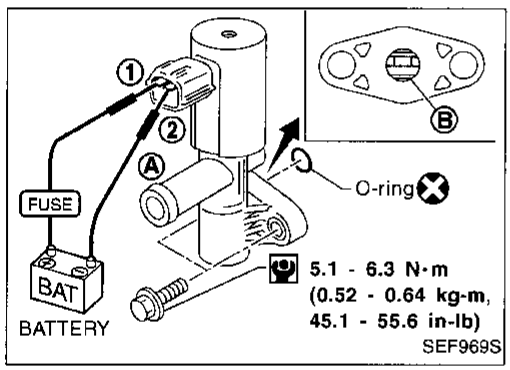

OVERALL FUNCTION CHECK

Use this procedure to check the overall function of the EVAP canister vent control valve circuit. During this check, a 1st trip DTC might not be confirmed.

Procedure for malfunction B

1) Remove EVAP canister vent control valve from EVAP canister and disconnect hoses from the valve.
2) Check air passage continuity.

Condition	Air passage continuity between Ⓐ and Ⓑ
12V direct current supply between terminals ① and ②	No
No supply	Yes

Make sure new O-ring is installed properly.

Evaporative Emission (EVAP) Canister Vent Control Valve (Cont'd)

EC-VENT/V-01

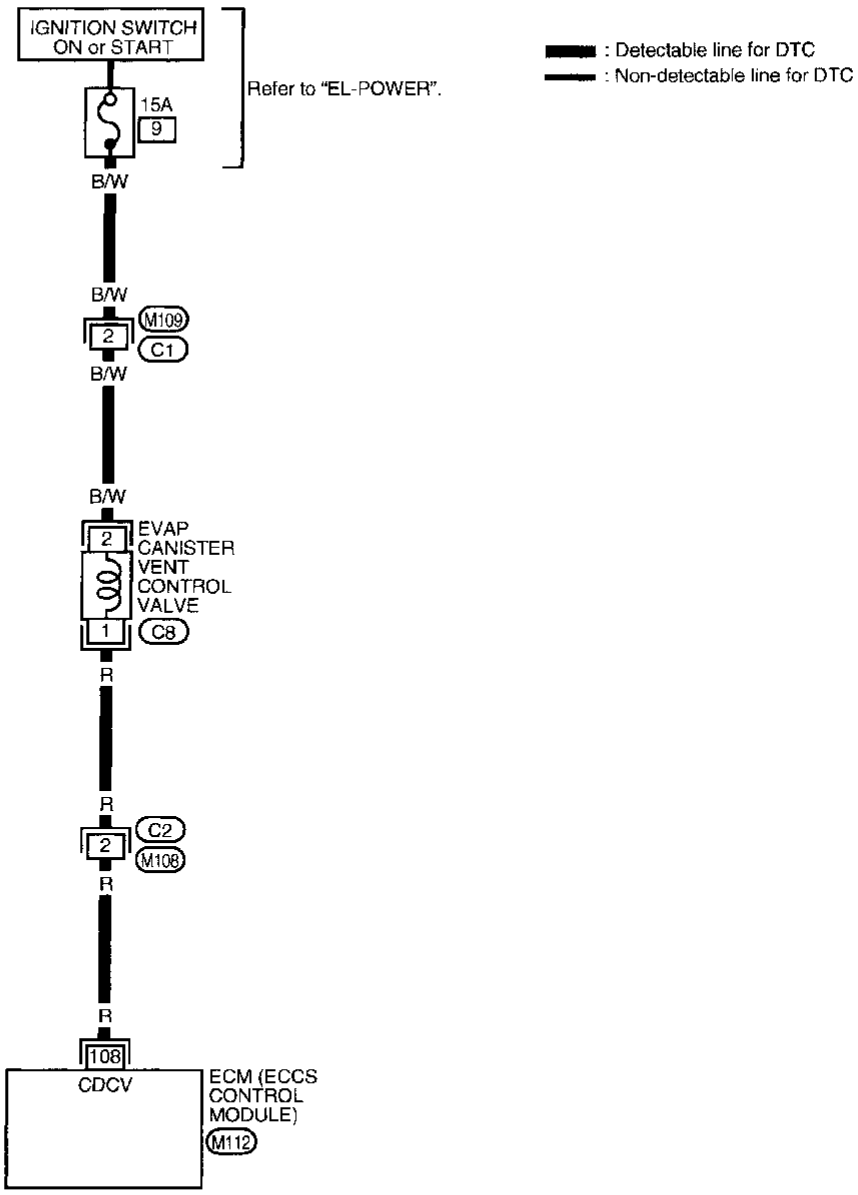

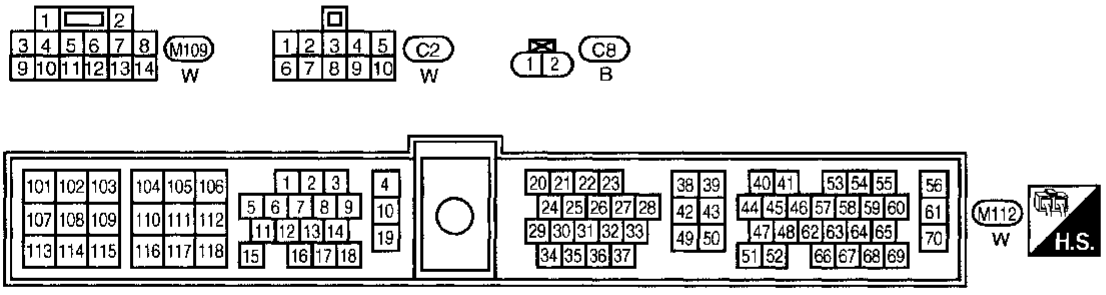

AEC311A

Evaporative Emission (EVAP) Canister Vent Control Valve (Cont'd)

DIAGNOSTIC PROCEDURE

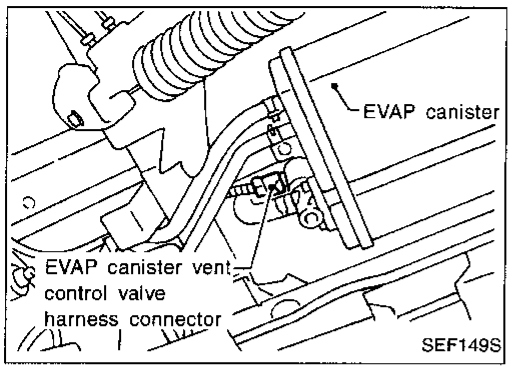

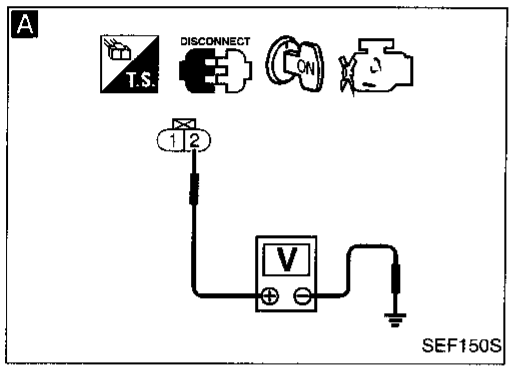

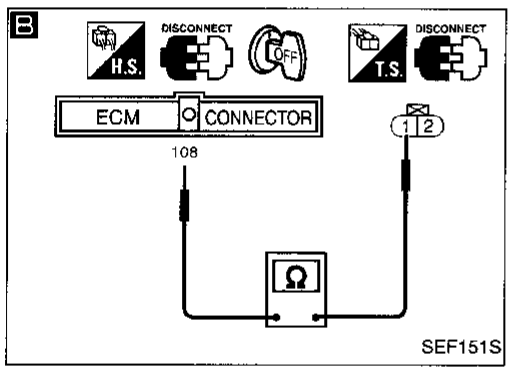

INSPECTION START

↓

A

CHECK POWER SUPPLY.
1. Disconnect EVAP canister vent control valve harness connector.
2. Turn ignition switch "ON".
3. Check voltage between terminal ② and ground with CONSULT or tester.
Voltage: Battery voltage

NG → Check the following.
- Harness connectors (C1), (M109)
- 15A fuse
- Harness for open or short between EVAP canister vent control valve and fuse

If NG, repair harness or connectors.

OK ↓

B

CHECK OUTPUT SIGNAL CIRCUIT.
1. Turn ignition switch "OFF".
2. Disconnect ECM harness connector.
3. Check harness continuity between ECM terminal (108) and terminal ①.
Continuity should exist.
If OK, check harness for short.

NG → Check the following.
- Harness connectors (C2), (M108)
- Harness for open or short between EVAP canister vent control valve and ECM

If NG, repair harness or connectors.

OK ↓

CHECK RUBBER TUBE FOR CLOGGING.
Check obstructed rubber tube to EVAP canister vent control valve and clean the rubber tube using air blower.

OK ↓

CHECK COMPONENT
(EVAP canister vent control valve).
Refer to "COMPONENT INSPECTION" on next page.

NG → Replace EVAP canister vent control valve.

OK ↓

CHECK COMPONENT
(EVAP control system pressure sensor).
Refer to "COMPONENT INSPECTION" on next page.

NG → Replace EVAP control system pressure sensor.

OK ↓

Disconnect and reconnect harness connectors in the circuit. Then retest.

Trouble is not fixed. ↓

Check ECM pin terminals for damage and check the connection of ECM harness connector. Reconnect ECM harness connector and retest.

↓

INSPECTION END

Evaporative Emission (EVAP) Canister Vent Control Valve (Cont'd)

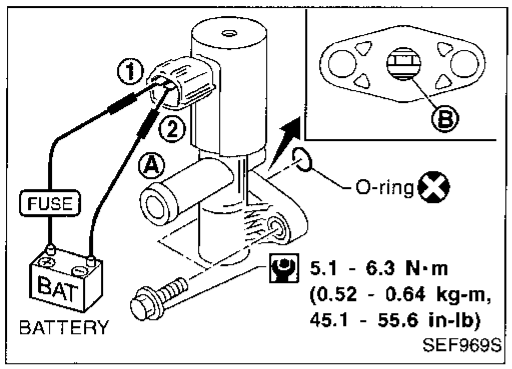

COMPONENT INSPECTION

EVAP canister vent control valve

Check air passage continuity.

Condition	Air passage continuity between Ⓐ and Ⓑ
12V direct current supply between terminals ① and ②	No
No supply	Yes

If NG, clean valve using air blower or replace as necessary.
Make sure new O-ring is installed properly.

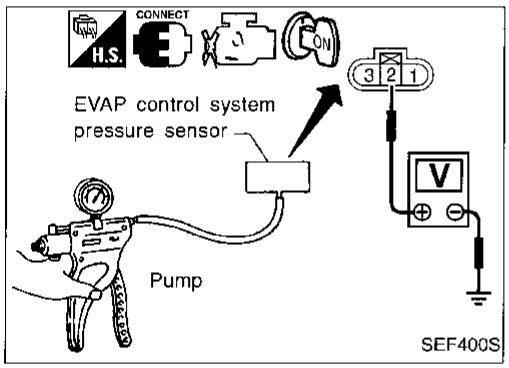

EVAP control system pressure sensor

1. Remove EVAP control system pressure sensor with its harness connector connected.
2. Remove hose from EVAP control system pressure sensor.
3. Use pump to apply vacuum and pressure to EVAP control system pressure sensor as shown in figure.
4. Check output voltage between terminal ② and engine ground.

Pressure (Relative to atmospheric pressure)	Voltage (V)
0 kPa (0 mmHg, 0 inHg, 0 psi)	3.0 - 3.6
−9.3 kPa (−70 mmHg, −2.76 inHg, −1.35 psi)	0.4 - 0.6

CAUTION:
Always calibrate the vacuum pump gauge when using it.

5. If NG, replace EVAP control system pressure sensor.

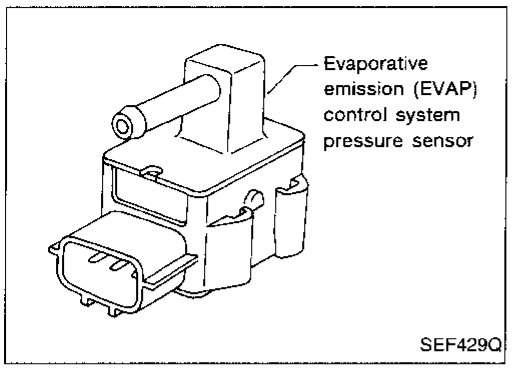

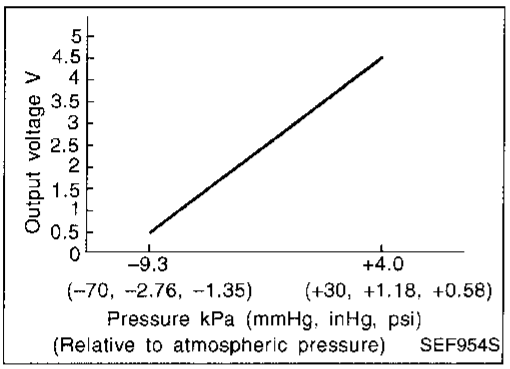

Evaporative Emission (EVAP) Control System Pressure Sensor

COMPONENT DESCRIPTION

The EVAP control system pressure sensor detects pressure in the purge line. The sensor output voltage to the ECM increases as pressure increases. The EVAP control system pressure sensor is not used to control the engine system. It is used only for on board diagnosis.

ECM TERMINALS AND REFERENCE VALUE

Specification data are reference values and are measured between each terminal and ㊸ (ECCS ground).

TERMINAL NO.	WIRE COLOR	ITEM	CONDITION	DATA (DC voltage)
49	P	Sensors' power supply	Ignition switch "ON"	Approximately 5V
50	B/G	Sensors' ground	Engine is running. (Warm-up condition) └ Idle speed	0.001 - 0.02V
67	L	EVAP control system pressure sensor	Ignition switch "ON"	Approximately 3.4V

CONSULT REFERENCE VALUE IN DATA MONITOR MODE

Specification data are reference values

MONITOR ITEM	CONDITION	SPECIFICATION
EVAP SYS PRES	● Ignition switch: ON	Approx. 3.4V

ON BOARD DIAGNOSIS LOGIC

Diagnostic Trouble Code No.	Malfunction is detected when	Check Items (Possible Cause)
P0450 0704	● An improper voltage signal from EVAP control system pressure sensor is sent to ECM.	● Harness or connectors (The EVAP control system pressure sensor circuit is open or shorted.) ● EVAP control system pressure sensor ● EVAP canister vent control valve (The valve is stuck open.)

Evaporative Emission (EVAP) Control System Pressure Sensor (Cont'd)

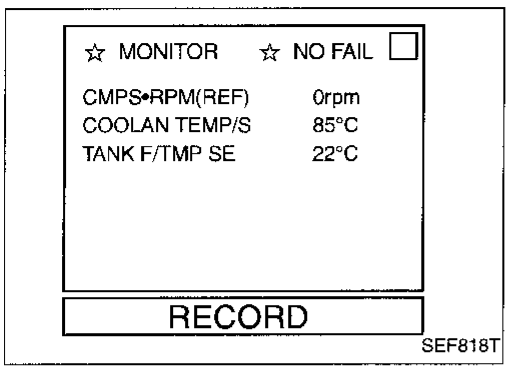

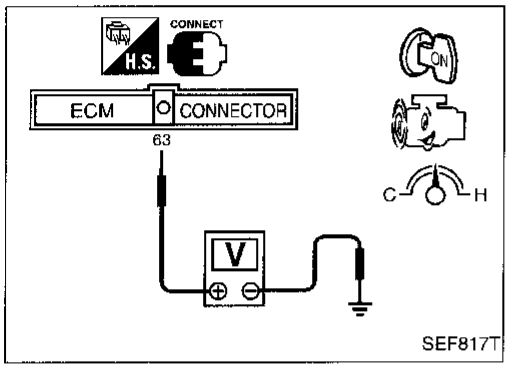

DIAGNOSTIC TROUBLE CODE CONFIRMATION PROCEDURE

1) Start engine and warm it up sufficiently.
2) Check that tank fuel temperature is above 0°C (32°F).
3) Turn ignition switch "OFF" and wait at least 7 seconds.
4) Turn ignition switch "ON".
5) Select "DATA MONITOR" mode with CONSULT.
6) Wait at least 5 seconds.

OR

1) Start engine and warm it up sufficiently.
2) Check that voltage between ECM terminal 63 and ground is less than 4.2V.
3) Turn ignition switch "OFF" and wait at least 7 seconds.
4) Turn ignition switch "ON" and wait at least 5 seconds.
5) Select "MODE 7" with GST.

OR

1) Start engine and warm it up sufficiently.
2) Check that voltage between ECM terminal 63 and ground is less than 4.2V.
3) Turn ignition switch "OFF" and wait at least 7 seconds.
4) Turn ignition switch "ON" and wait at least 5 seconds.
5) Turn ignition switch "OFF", wait at least 7 seconds and then turn "ON".
6) Perform "Diagnostic Test Mode II (Self-diagnostic results)" with ECM.

Evaporative Emission (EVAP) Control System Pressure Sensor (Cont'd)

EC-PRE/SE-01

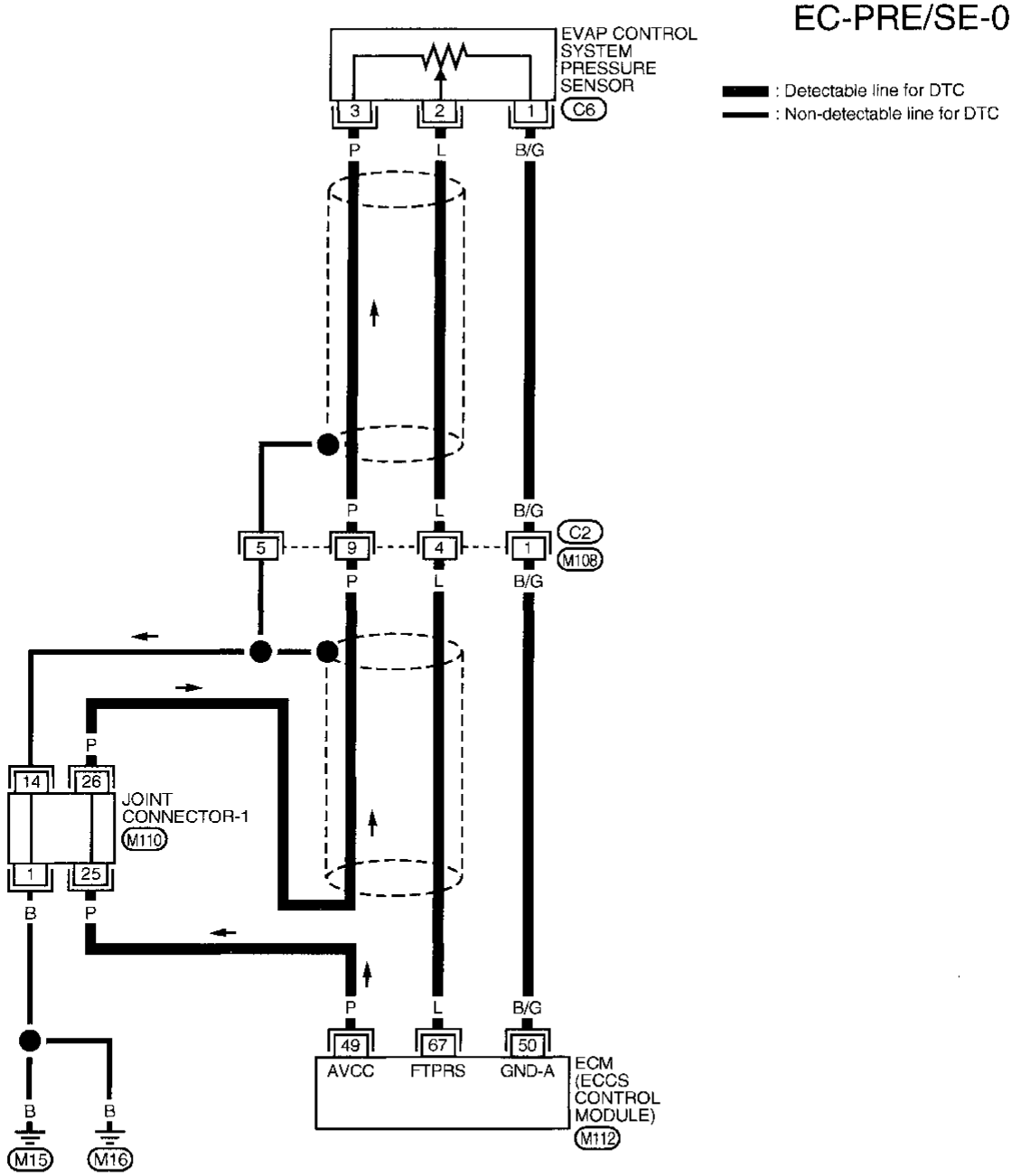

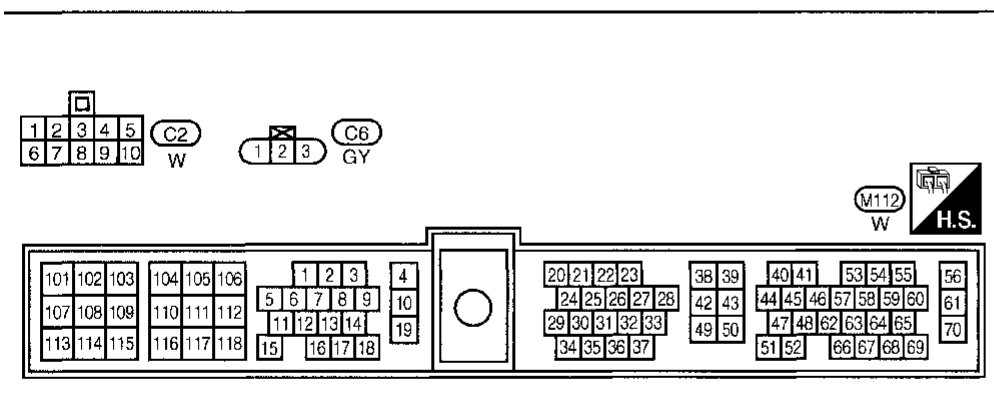

Refer to last page (Foldout page).
M110

AEC054A

Evaporative Emission (EVAP) Control System Pressure Sensor (Cont'd)

DIAGNOSTIC PROCEDURE

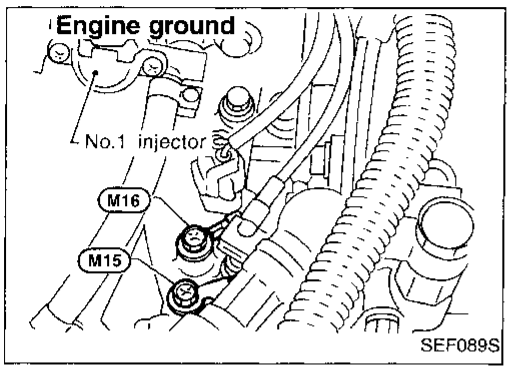

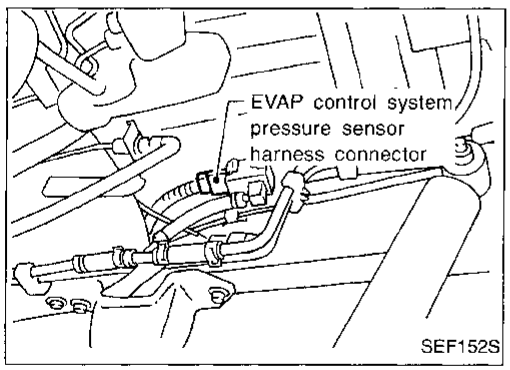

INSPECTION START

↓

CHECK SHIELD CIRCUIT.
1. Turn ignition switch "OFF".
2. Loosen and retighten engine ground screws.
3. Remove joint connector-1.
4. Check the following.
   - Continuity between joint connector-1 terminal ① and ground
   - Joint connector-1 (Refer to "HARNESS LAYOUT" in EL section.)

Continuity should exist.
If OK, check harness for short. Then reconnect joint connector-1.

NG → Repair harness or connectors.

OK ↓

A

CHECK POWER SUPPLY.
1. Disconnect EVAP control system pressure sensor harness connector.
2. Turn ignition switch "ON".
3. Check voltage between terminal ③ and engine ground with CONSULT or tester.

Voltage: Approximately 5V

NG → Check the following.
- Harness connectors (M108), (C2)
- Joint connector-1
- Harness for open or short between EVAP control system pressure sensor and ECM

If NG, repair harness or connectors.

OK ↓

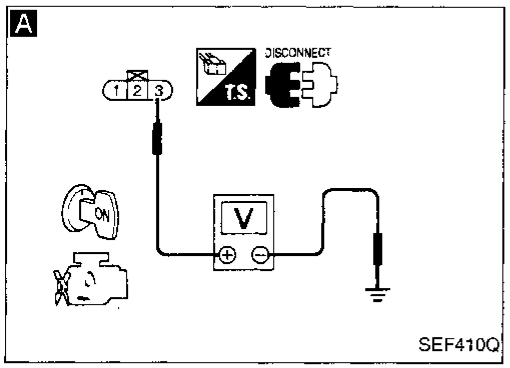

B

CHECK GROUND CIRCUIT.
1. Turn ignition switch "OFF".
2. Check harness continuity between terminal ① and engine ground.

Continuity should exist.
If OK, check harness for short.

NG → Check the following.
- Harness connectors (M108), (C2)
- Harness for open or short between ECM and EVAP control system pressure sensor

If NG, repair harness or connectors.

OK ↓

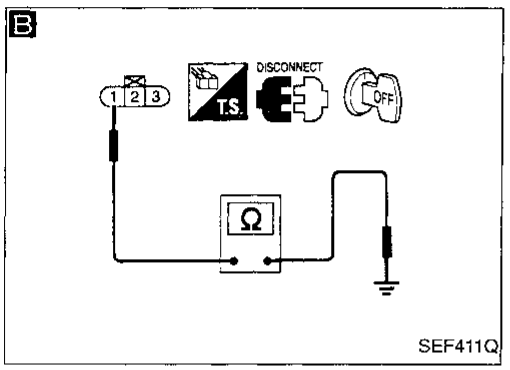

C

CHECK INPUT SIGNAL CIRCUIT.
1. Disconnect ECM harness connector.
2. Check harness continuity between ECM terminal (67) and terminal ②.

Continuity should exist.
If OK, check harness for short.

NG → Check the following.
- Harness connectors (M108), (C2)
- Harness for open or short between ECM and EVAP control system pressure sensor

If NG, repair harness or connectors.

OK ↓

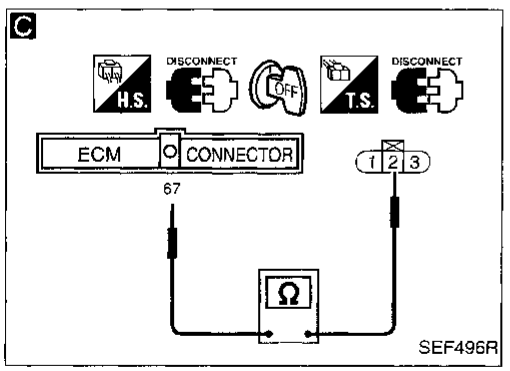

CHECK COMPONENT
(EVAP canister vent control valve).
Refer to "COMPONENT INSPECTION", EC-211.

OK ↓

Ⓐ
(Go to next page.)

Evaporative Emission (EVAP) Control System Pressure Sensor (Cont'd)

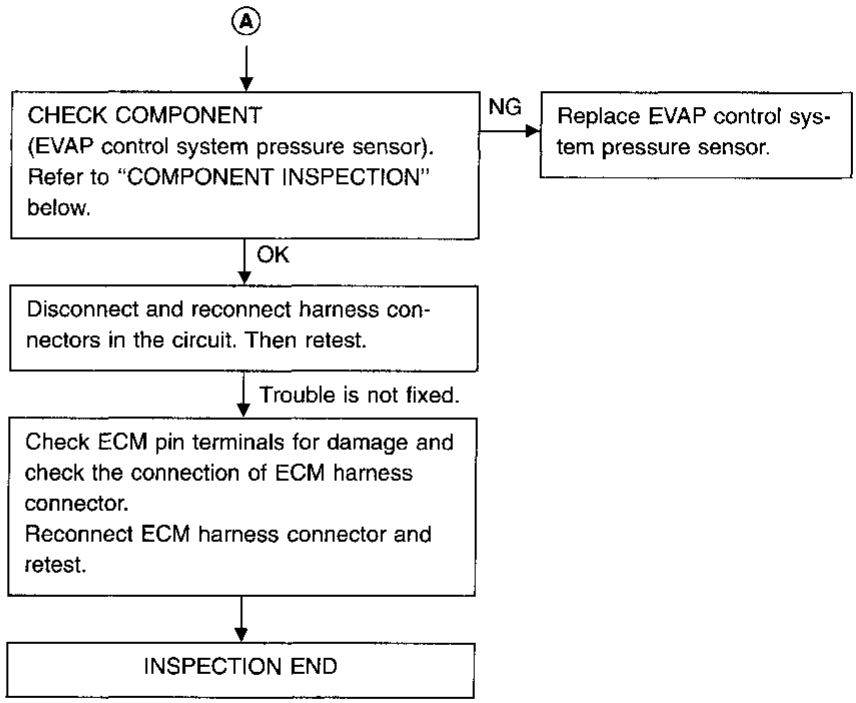

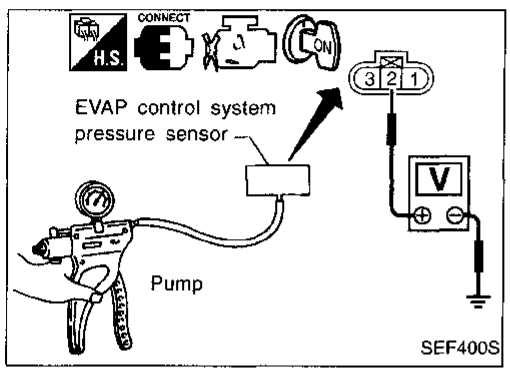

COMPONENT INSPECTION

EVAP control system pressure sensor

1. Remove EVAP control system pressure sensor with its harness connector connected.
2. Remove hose from EVAP control system pressure sensor.
3. Use pump to apply vacuum and pressure to EVAP control system pressure sensor as shown in figure.
4. Check output voltage between terminal ② and engine ground.

Pressure (Relative to atmospheric pressure)	Voltage (V)
0 kPa (0 mmHg, 0 inHg, 0 psi)	3.0 - 3.6
−9.3 kPa (−70 mmHg, −2.76 inHg, −1.35 psi)	0.4 - 0.6

CAUTION:
Always calibrate the vacuum pump gauge when using it.

5. If NG, replace EVAP control system pressure sensor.

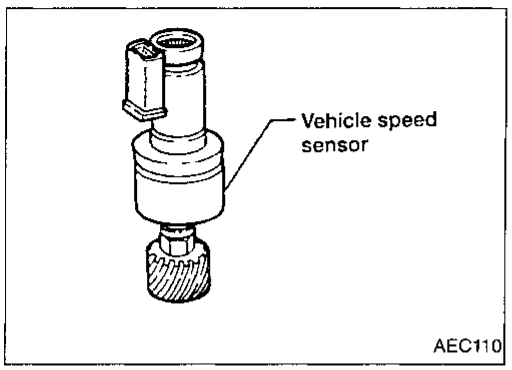

Vehicle Speed Sensor (VSS)

COMPONENT DESCRIPTION

The vehicle speed sensor is installed in the transmission. It contains a pulse generator which provides a vehicle speed signal to the speedometer. The speedometer then sends a signal to the ECM.

ECM TERMINALS AND REFERENCE VALUE

Specification data are reference values and are measured between each terminal and ㊸ (ECCS ground).

TERMINAL NO.	WIRE COLOR	ITEM	CONDITION	DATA (DC voltage)
26	W/L	Vehicle speed sensor	Engine is running. └ Slowly rotating front wheels	Approximately 1.8 - 2.4V* (AC voltage)

*: Average voltage for pulse signal (Actual pulse signal can be confirmed by oscilloscope.)

ON BOARD DIAGNOSIS LOGIC

Diagnostic Trouble Code No.	Malfunction is detected when	Check items (Possible cause)
P0500 0104	● The almost 0 km/h (0 MPH) signal from the vehicle speed sensor is sent to ECM even when the vehicle is driving.	● Harness or connector (The vehicle speed sensor circuit is open or shorted.) ● Vehicle speed sensor

Vehicle Speed Sensor (VSS) (Cont'd)

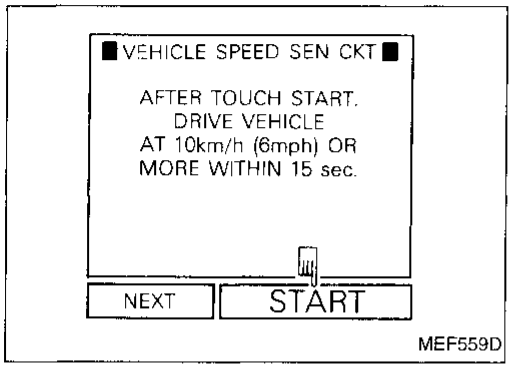

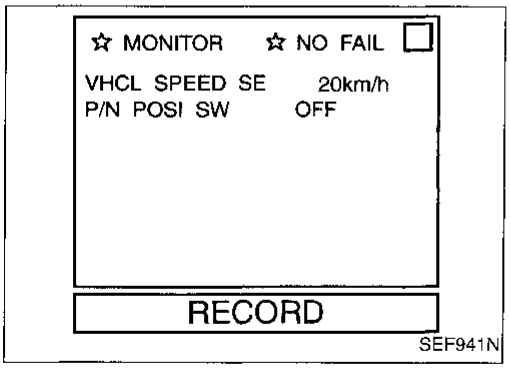

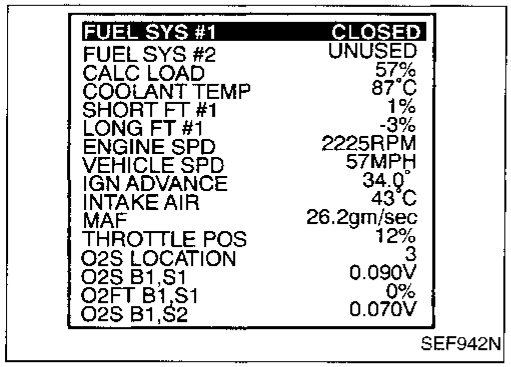

OVERALL FUNCTION CHECK

Use this procedure to check the overall function of vehicle speed sensor circuit. During this check, a 1st trip DTC might not be confirmed.

1) Jack up drive wheels.

2) Start engine.
3) Perform "VEHICLE SPEED SEN CKT" in "FUNCTION TEST" mode with CONSULT.

OR

2) Start engine.
3) Read vehicle speed sensor signal in "DATA MONITOR" mode with CONSULT.

The vehicle speed on CONSULT should be able to exceed 10 km/h (6 MPH) when rotating wheels with suitable gear position.

OR

1) Jack up drive wheels.
2) Start engine.
3) Read vehicle speed sensor signal in "MODE 1" with GST.

The vehicle speed on GST should be able to exceed 10 km/h (6 MPH) when rotating wheels with suitable gear position.

OR

DIAGNOSTIC TROUBLE CODE CONFIRMATION PROCEDURE

1) Start engine and warm it up sufficiently.
2) Perform test drive for at least 10 seconds continuously in the following recommended condition.

Engine speed	: 1,400 - 2,500 rpm (A/T models) 1,700 - 2,600 rpm (2WD M/T models) 1,850 - 2,850 rpm (4WD M/T models)
Intake manifold vacuum	: (A/T models) –53.3 to –33.3 kPa (–400 to –250 mmHg, –15.75 to –9.84 inHg, –7.73 to –4.83 psi) (M/T models) –46.7 to –32.0 kPa (–350 to –240 mmHg, –13.78 to –9.45 inHg, –6.77 to –4.64 psi)
Gear position	: Suitable position (except "N" or "P" position)

3) Stop the vehicle, turn ignition switch "OFF", wait at least 7 seconds and then turn "ON".
4) Perform "Diagnostic Test Mode II (Self-diagnostic results)" with ECM.

Even though 1st trip DTC is not detected, perform the above test drive at least one more time.

EC-VSS-01

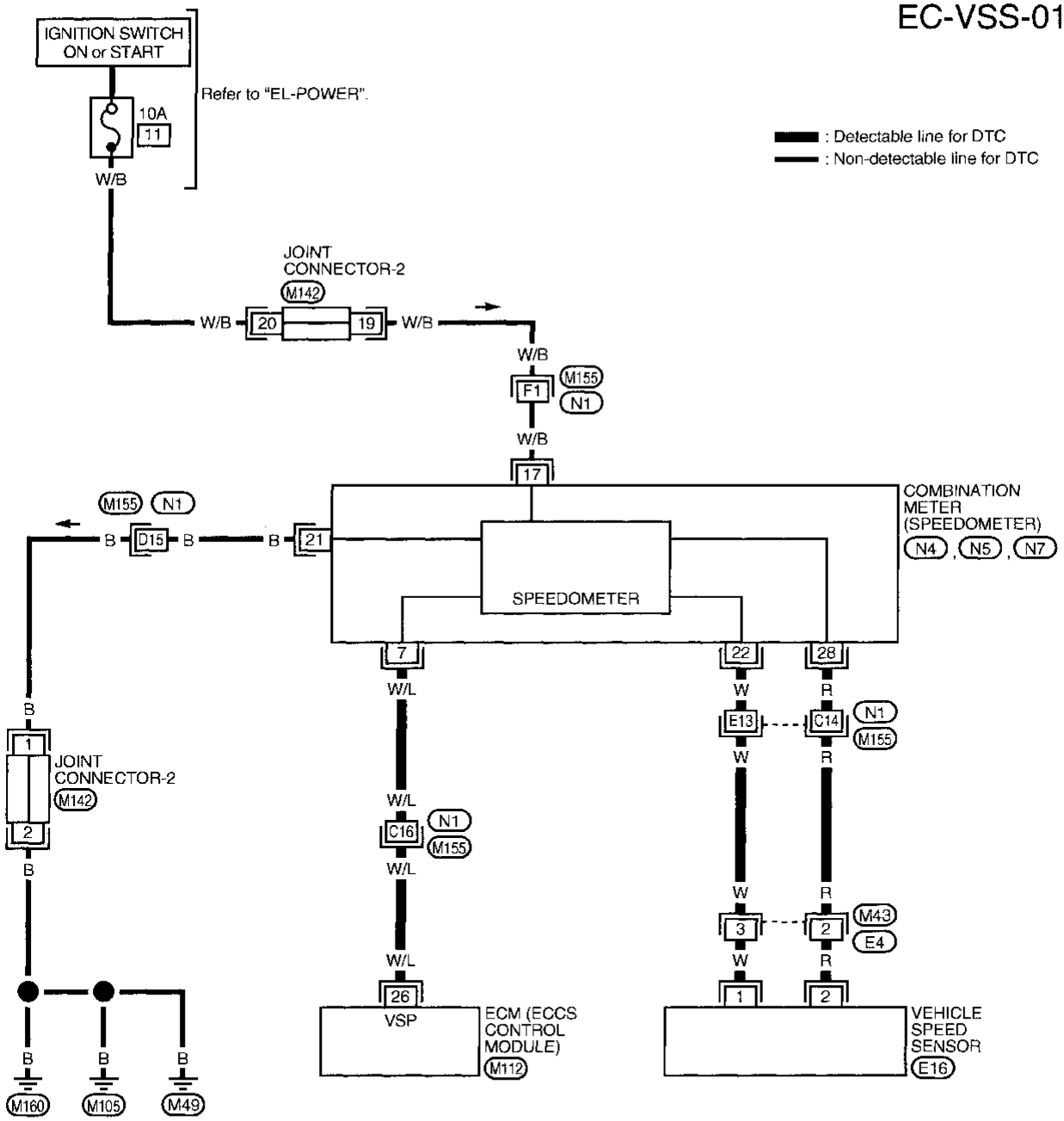

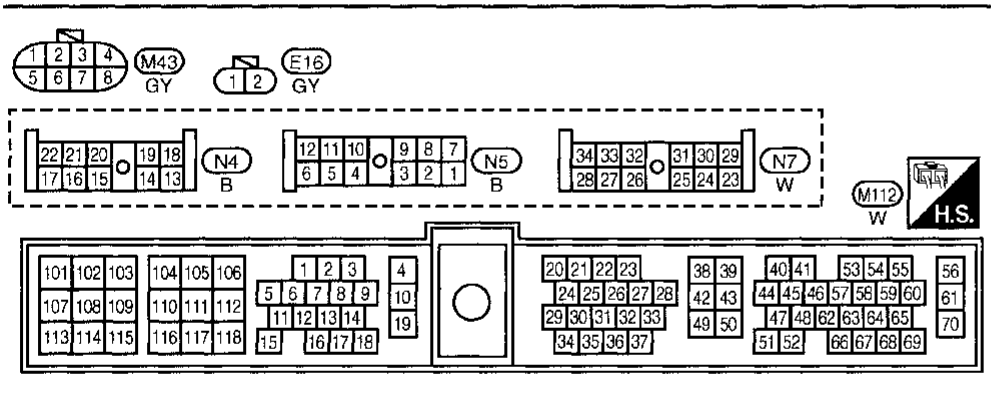

Refer to last page (Foldout page).
M142
M155, N1

AEC055A

Vehicle Speed Sensor (VSS) (Cont'd)

DIAGNOSTIC PROCEDURE

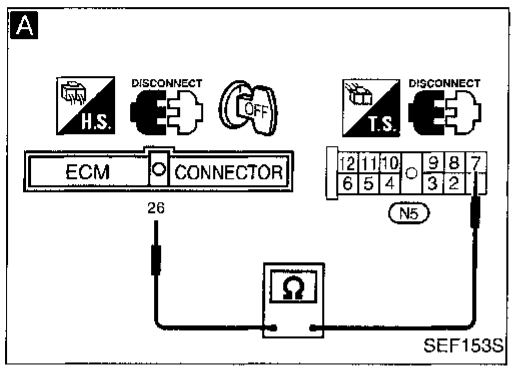

INSPECTION START

A

CHECK INPUT SIGNAL CIRCUIT.
1. Turn ignition switch "OFF".
2. Disconnect ECM harness connector and combination meter harness connector.
3. Check harness continuity between ECM terminal (26) and terminal (7).
   Continuity should exist.
   If OK, check harness for short.

NG →
Check the following.
- Harness connectors (N1), (M155)
- Harness for open or short between ECM and combination meter

If NG, repair harness or connectors.

OK ↓

CHECK SPEEDOMETER FUNCTION.
Make sure that speedometer functions properly.

NG →
Check the following.
- Harness connectors (N1), (M155)
- Harness connectors (M43), (E4)
- Harness for open or short between combination meter and vehicle speed sensor

If NG, repair harness or connectors.
Check vehicle speed sensor and its circuit.
(Refer to EL section.)

OK ↓

Disconnect and reconnect harness connectors in the circuit. Then retest.

Trouble is not fixed. ↓

Check ECM pin terminals for damage and check the connection of ECM harness connector. Reconnect ECM harness connector and retest.

↓

INSPECTION END

Idle Air Control Valve (IACV) — Auxiliary Air Control (AAC) Valve

SYSTEM DESCRIPTION

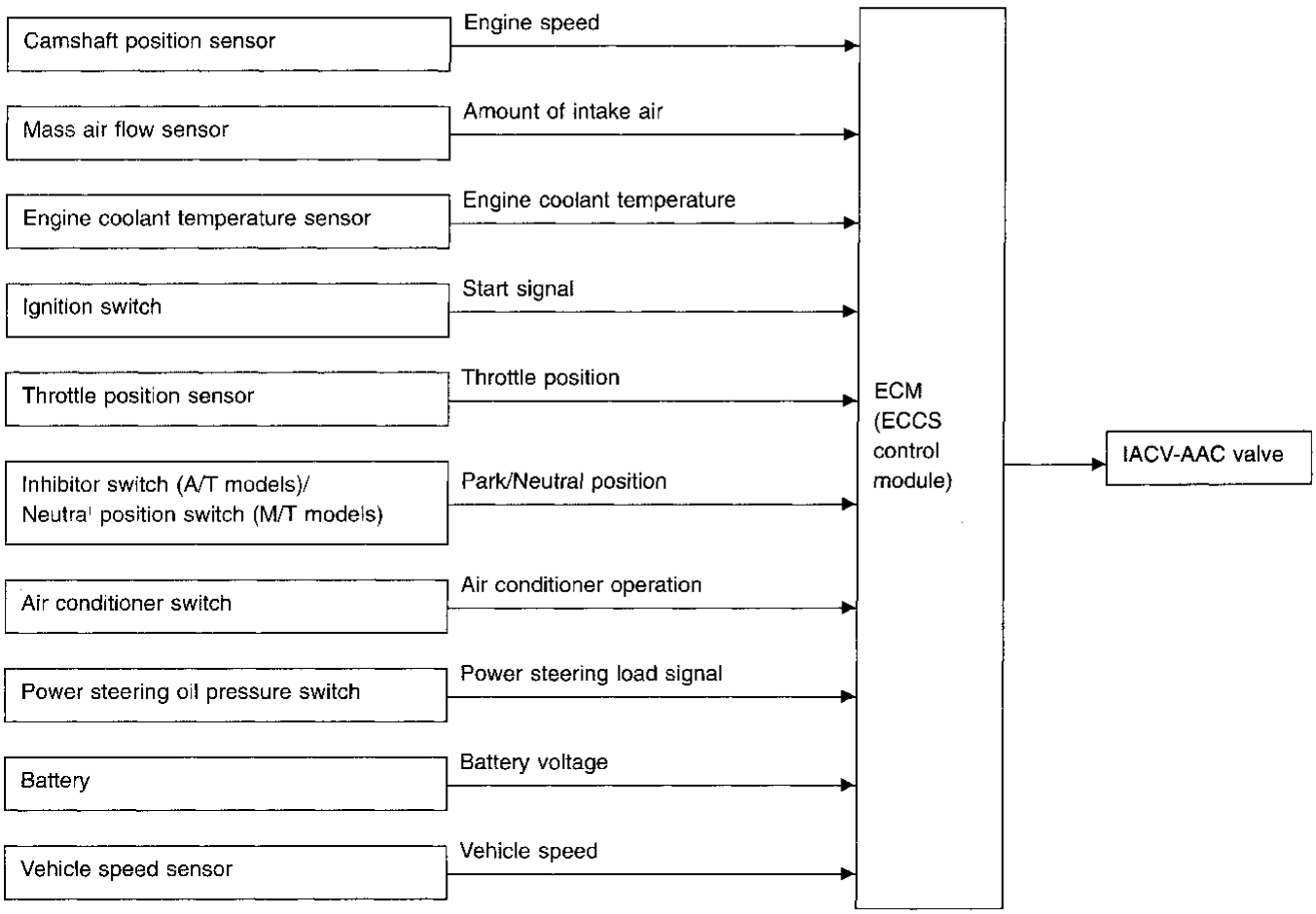

This system automatically controls engine idle speed to a specified level. Idle speed is controlled through fine adjustment of the amount of air which by-passes the throttle valve via IACV-AAC valve. The IACV-AAC valve repeats ON/OFF operation according to the signal sent from the ECM. The camshaft position sensor detects the actual engine speed and sends a signal to the ECM. The ECM then controls the ON/OFF time of the IACV-AAC valve so that engine speed coincides with the target value memorized in ECM. The target engine speed is the lowest speed at which the engine can operate steadily. The optimum value stored in the ECM is determined by taking into consideration various engine conditions, such as during warm up, deceleration, and engine load (air conditioner and power steering operation).

ECM TERMINALS AND REFERENCE VALUE

Specification data are reference values and are measured between each terminal and ㊸ (ECCS ground).

TERMINAL NO.	WIRE COLOR	ITEM	CONDITION	DATA (DC voltage)
101	W/G	IACV-AAC valve	Ignition switch "ON".	BATTERY VOLTAGE (11 - 14V)
			Engine is running. (Warm-up condition) └ Engine speed is 2,000 rpm	0 - 7V

CONSULT REFERENCE VALUE IN DATA MONITOR MODE

Specification data are reference values.

MONITOR ITEM	CONDITION		SPECIFICATION
IACV-AAC/V	• Engine: After warming up • Air conditioner switch: OFF • Shift lever "N" • No-load	Idle	20 - 40%
		2,000 rpm	—

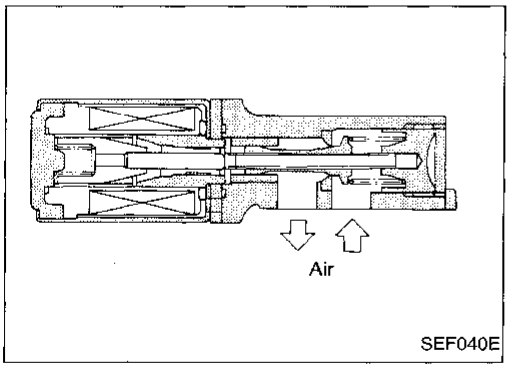

COMPONENT DESCRIPTION

IACV-ACC valve

The IACV-AAC valve is moved by ON/OFF pulses from the ECM. The longer the ON pulse, the greater the amount of air that will flow through the valve. The more air that flows through the valve, the higher the idle speed.

ON BOARD DIAGNOSIS LOGIC

Diagnostic Trouble Code No.	Malfunction is detected when	Check Items (Possible cause)
P0505 0205	A) The IACV-AAC valve does not operate properly.	• Harness or connectors (The IACV-AAC valve circuit is open.) • IACV-AAC valve
	B) The IACV-AAC valve does not operate properly.	• Harness or connectors (The IACV-AAC valve circuit is shorted.) • IACV-AAC valve

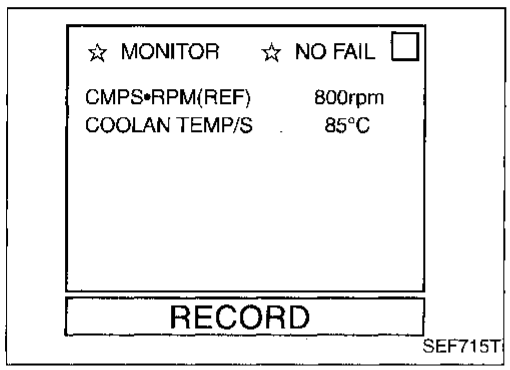

DIAGNOSTIC TROUBLE CODE CONFIRMATION PROCEDURE

Perform "Procedure for malfunction A" first. If the 1st trip DTC cannot be confirmed, perform "Procedure for malfunction B".

Procedure for malfunction A

1) Turn ignition switch "ON".
2) Select "DATA MONITOR" mode with CONSULT.
3) Start engine and run it for at least 2 seconds at idle speed.

OR

1) Start engine and run it for at least 2 seconds at idle speed.
2) Select "MODE 7" with GST.

OR

1) Start engine and run it for at least 2 seconds at idle speed.
2) Perform "Diagnostic Test Mode II (Self-diagnostic results)" with ECM.

Idle Air Control Valve (IACV) — Auxiliary Air Control (AAC) Valve (Cont'd)

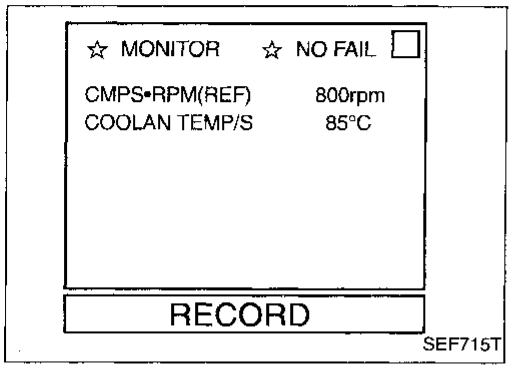

Procedure for malfunction B

1) Start engine and warm it up sufficiently.
2) Turn ignition switch "OFF" and wait at least 7 seconds.
3) Turn ignition switch "ON" again and select "DATA MONITOR" mode with CONSULT.
4) Start engine and run it for at least 1 minute at idle speed.

OR

1) Start engine and warm it up sufficiently.
2) Turn ignition switch "OFF" and wait at least 7 seconds.
3) Start engine again and run it for at least 1 minute at idle speed.
4) Select "MODE 7" with GST.

OR

1) Start engine and warm it up sufficiently.
2) Turn ignition switch "OFF" and wait at least 7 seconds.
3) Start engine again and run it for at least 1 minute at idle speed.
4) Turn ignition switch "OFF", wait at least 7 seconds and then turn "ON".
5) Perform "Diagnostic Test Mode II (Self-diagnostic results)" with ECM.

Idle Air Control Valve (IACV) — Auxiliary Air Control (AAC) Valve (Cont'd)

EC-AAC/V-01

: Detectable line for DTC
: Non-detectable line for DTC

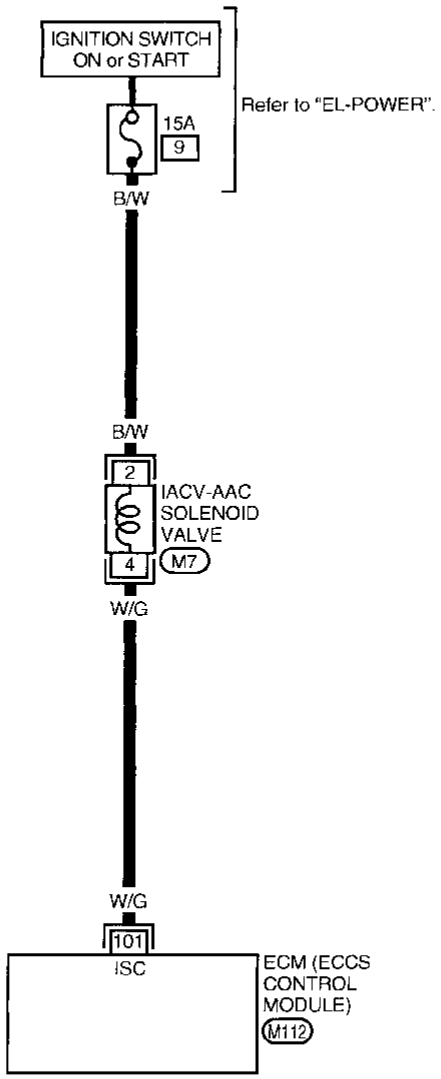

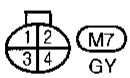

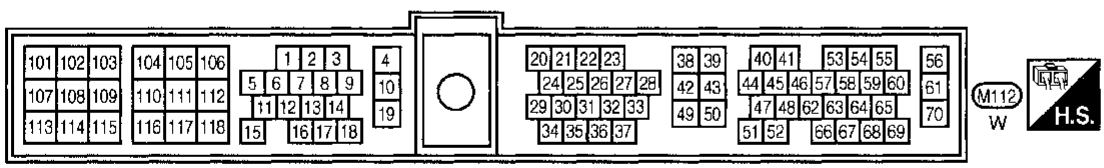

AEC312A

Idle Air Control Valve (IACV) — Auxiliary Air Control (AAC) Valve (Cont'd)

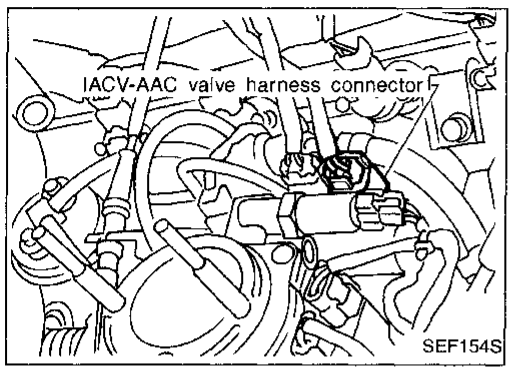

DIAGNOSTIC PROCEDURE

INSPECTION START

A

CHECK POWER SUPPLY.
1. Stop engine.
2. Disconnect IACV-AAC valve harness connector.
3. Turn ignition switch "ON".
4. Check voltage between terminal ② and ground with CONSULT or tester.
Voltage: Battery voltage

NG → Check the following.
- 15A fuse
- Harness for open or short between IACV-AAC valve and fuse

If NG, repair harness or connectors.

OK ↓

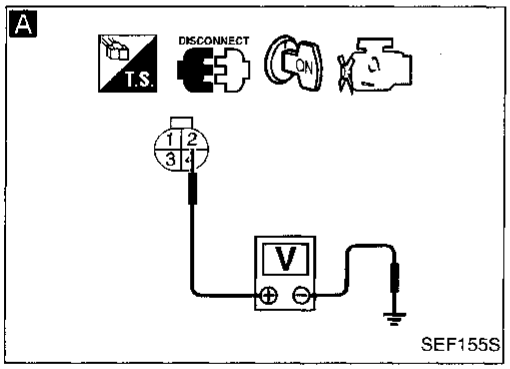

B

CHECK OUTPUT SIGNAL CIRCUIT.
1. Turn ignition switch "OFF".
2. Disconnect ECM harness connector.
3. Check harness continuity between ECM terminal (101) and terminal ④.
Continuity should exist.
If OK, check harness for short.

NG → Repair harness or connectors.

OK ↓

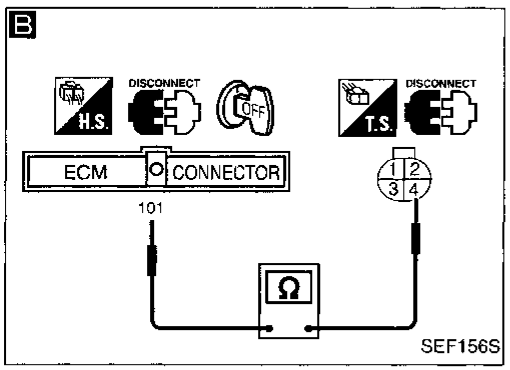

CHECK COMPONENT (IACV-AAC valve).
Refer to "COMPONENT INSPECTION" below.

NG → Replace IACV-AAC valve.

OK ↓

Disconnect and reconnect harness connectors in the circuit. Then retest.

Trouble is not fixed. ↓

Check ECM pin terminals for damage and check the connection of ECM harness connector. Reconnect ECM harness connector and retest.

↓

INSPECTION END

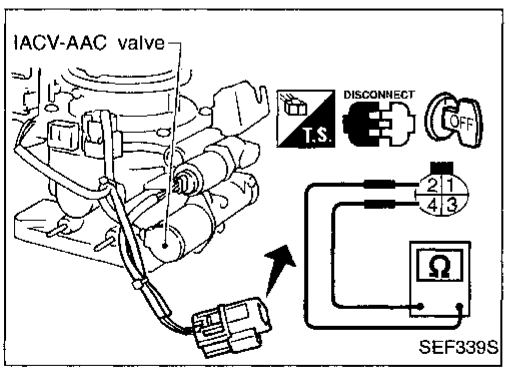

COMPONENT INSPECTION

IACV-AAC valve

Disconnect IACV-AAC valve harness connector.
- Check IACV-AAC valve resistance.
  Resistance:
  Approximately 10Ω at 25°C (77°F)
- Check plunger for seizing or sticking.
- Check for broken spring.

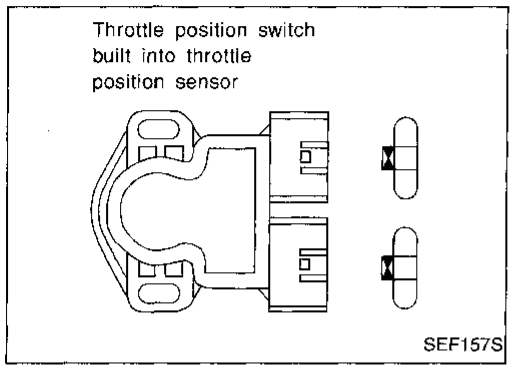

Closed Throttle Position Switch

COMPONENT DESCRIPTION

A closed throttle position switch and wide open throttle position switch are built into the throttle position sensor unit. The wide open throttle position switch is used only for A/T control.
When the throttle valve is in the closed position, the closed throttle position switch sends a voltage signal to the ECM. The ECM only uses this signal to open or close the EVAP canister purge control valve when the throttle position sensor is malfunctioning.

ECM TERMINALS AND REFERENCE VALUE

Specification data are reference values and are measured between each terminal and ㊸ (ECCS ground).

TERMINAL NO.	WIRE COLOR	ITEM	CONDITION	DATA (DC voltage)
27	Y	Throttle position switch (Closed position)	Ignition switch "ON" (Warm-up condition) — Accelerator pedal released	BATTERY VOLTAGE (11 - 14V)
			Ignition switch "ON" — Accelerator pedal depressed	Approximately 0V

CONSULT REFERENCE VALUE IN DATA MONITOR MODE

Specification data are reference values.

MONITOR ITEM	CONDITION		SPECIFICATION
CLSD THL/P SW	• Ignition switch: ON (Engine stopped)	Throttle valve: Idle position	ON
		Throttle valve: Slightly open	OFF

ON BOARD DIAGNOSIS LOGIC

Diagnostic Trouble Code No.	Malfunction is detected when	Check Items (Possible Cause)
P0510 0203	• Battery voltage from the closed throttle position switch is sent to ECM with the throttle valve opened.	• Harness or connectors. (The closed throttle position switch circuit is shorted.) • Closed throttle position switch.

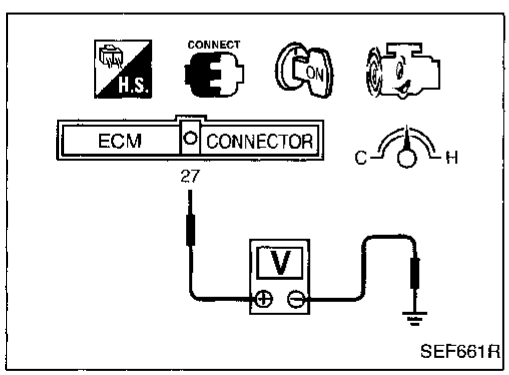

OVERALL FUNCTION CHECK

Use this procedure to check the overall function of the closed throttle position switch circuit. During this check, a 1st trip DTC might not be confirmed.

1) Start engine and warm it up sufficiently.
2) Check the voltage between ECM terminal ㉗ and ground under the following conditions.
   At idle: Battery voltage
   At 2,000 rpm: Approximately 0V

Closed Throttle Position Switch (Cont'd)

EC-TP/SW-01

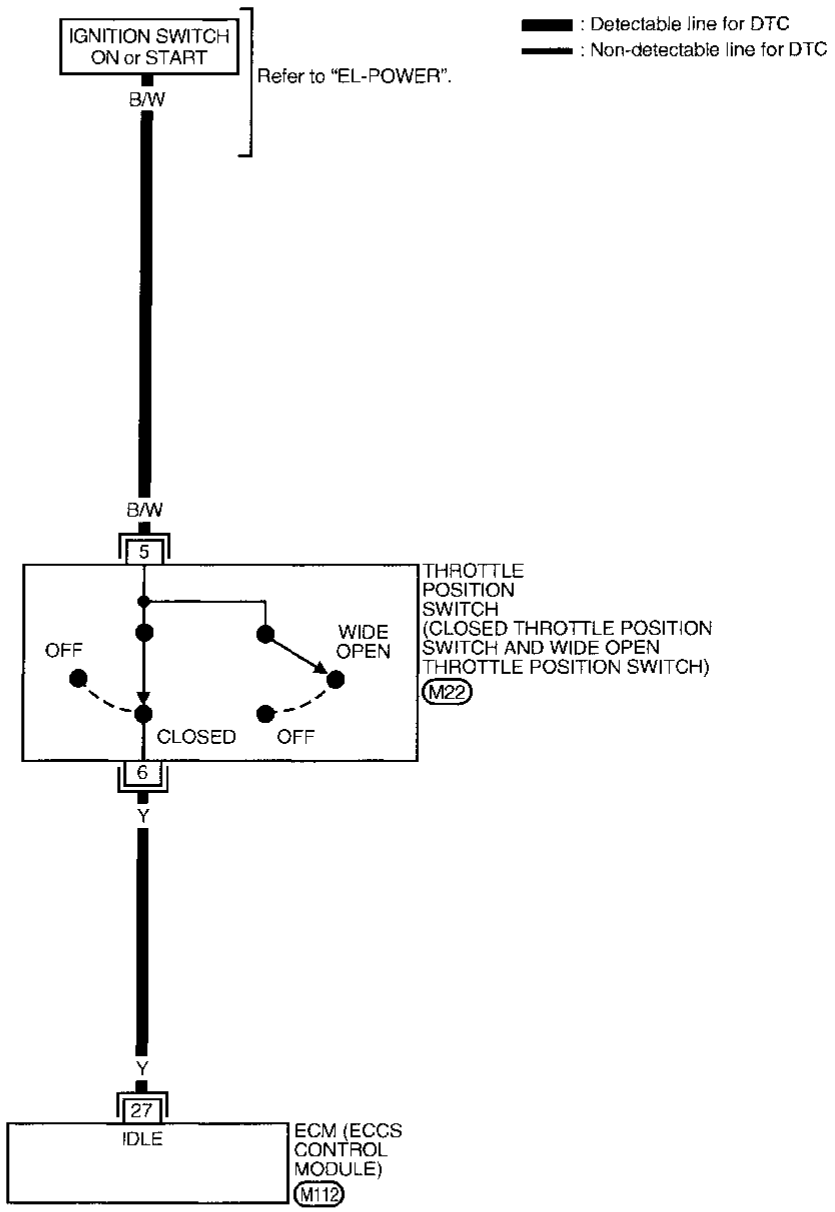

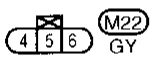

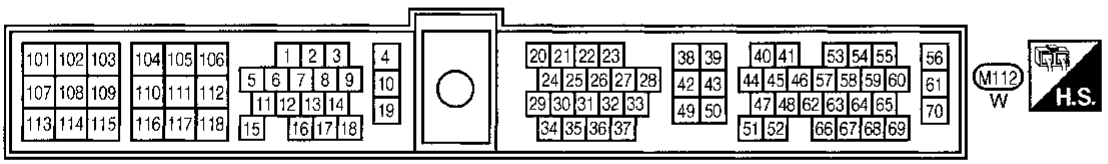

AEC057A

Closed Throttle Position Switch (Cont'd)

DIAGNOSTIC PROCEDURE

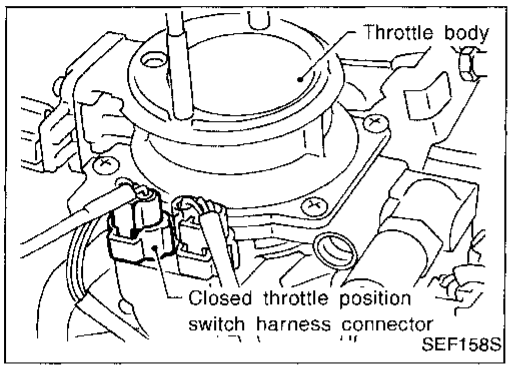

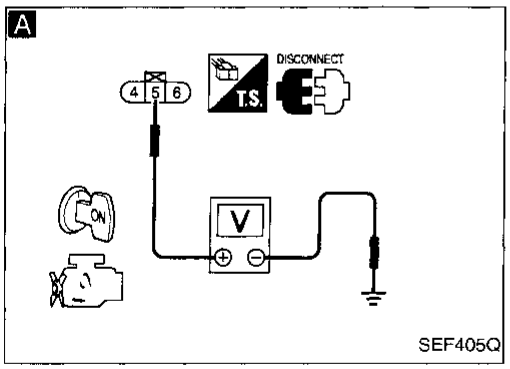

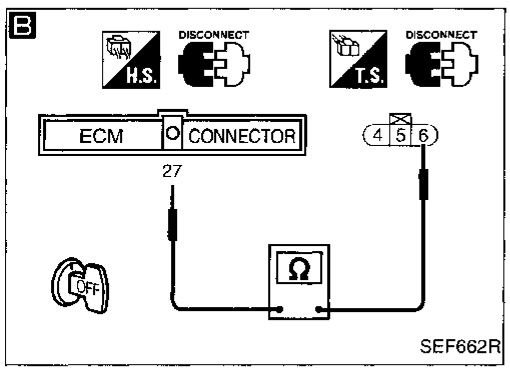

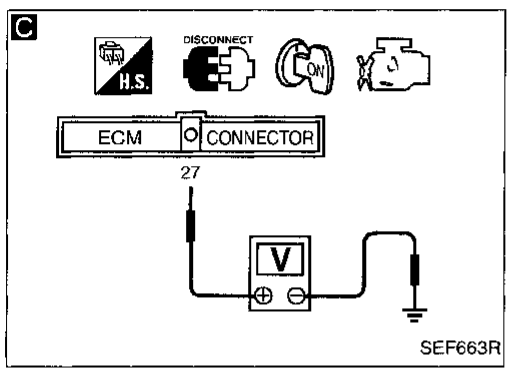

INSPECTION START

↓

CHECK FIC.
Perform "Fast Idle Cam (FIC) Inspection and Adjustment", EC-27.

↓

A

CHECK POWER SUPPLY.
1. Turn ignition switch "OFF".
2. Disconnect throttle position switch harness connector.
3. Turn ignition switch "ON".
4. Check voltage between terminal ⑤ and ground with CONSULT or tester.
Voltage: Battery voltage

NG → Repair harness or connectors.

OK ↓

B

CHECK INPUT SIGNAL CIRCUIT.
1. Turn ignition switch "OFF".
2. Disconnect ECM harness connector.
3. Check harness continuity between ECM terminal ㉗ and terminal ⑥.
Continuity should exist.
If OK, check harness for short.

NG → Repair harness or connectors.

OK ↓

C

CHECK INPUT SIGNAL CIRCUIT.
1. Turn ignition switch "ON".
2. Check voltage between ECM terminal ㉗ and engine ground.
Voltage: Approx. 0V

NG → Repair harness or connectors.

OK ↓

ADJUST THROTTLE POSITION SWITCH.
Perform BASIC INSPECTION, EC-72.

OK ↓

CHECK COMPONENT
(Closed throttle position switch).
Refer to "COMPONENT INSPECTION" on next page.

NG → Replace throttle position switch.

OK ↓

Disconnect and reconnect harness connectors in the circuit. Then retest.

Trouble is not fixed. ↓

Check ECM pin terminals for damage and check the connection of ECM harness connector.
Reconnect ECM harness connector and retest.

↓

INSPECTION END

Closed Throttle Position Switch (Cont'd)

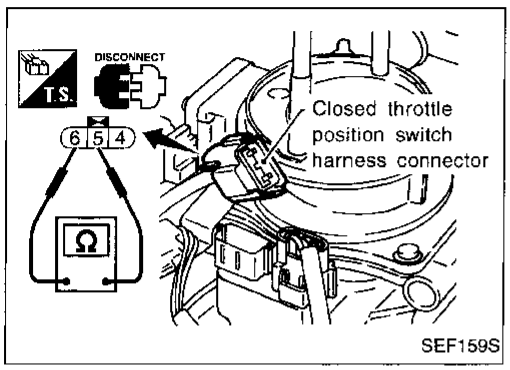

COMPONENT INSPECTION

Closed throttle position switch

1. Start engine and warm it up sufficiently.
2. Turn ignition switch "OFF".
3. Disconnect throttle position switch harness connector.
4. Check continuity between terminals ⑤ and ⑥ while opening throttle valve manually.

Throttle valve conditions	Continuity
Completely closed	Yes
Partially open or completely open	No

If NG, replace throttle position switch.

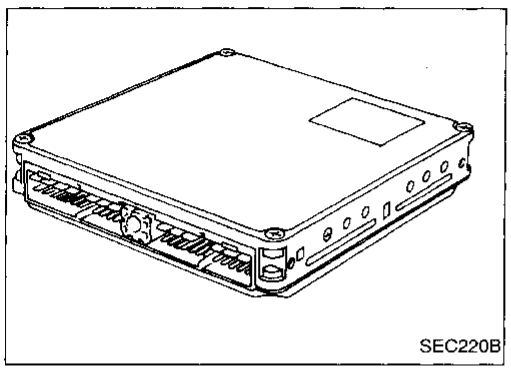

Engine Control Module (ECM)-ECCS Control Module

COMPONENT DESCRIPTION

The ECM consists of a microcomputer, diagnostic test mode selector, and connectors for signal input and output and for power supply. The unit controls the engine.

ON BOARD DIAGNOSIS LOGIC

Diagnostic Trouble Code No.	Malfunction is detected when	Check Item (Possible Cause)
P0605 0301	● ECM calculation function is malfunctioning.	● ECM (ECCS control module)

DIAGNOSTIC TROUBLE CODE CONFIRMATION PROCEDURE

1) Turn ignition switch "ON".
2) Select "DATA MONITOR" mode with CONSULT.
3) Start engine.
4) Run engine for at least 2 seconds at idle speed.

OR

1) Turn ignition switch "ON".
2) Start engine.
3) Run engine for at least 2 seconds at idle speed.
4) Select "Mode 7" with GST.

OR

1) Turn ignition switch "ON".
2) Start engine and wait at least 2 seconds.
3) Turn ignition switch "OFF" and wait at least 7 seconds.
4) Perform "Diagnostic Test Mode II (Self-diagnostic results)" with ECM.

DIAGNOSTIC PROCEDURE

INSPECTION START

↓

1. Turn ignition switch "ON".
2. Select "SELF DIAG RESULTS" mode with CONSULT.
3. Touch "ERASE".

OR

1. Turn ignition switch "ON".
2. Select MODE 4 with GST.
3. Touch "ERASE".

OR

1. Turn ignition switch "ON".
2. Erase the diagnostic test mode II (Self-diagnostic results) memory.

↓

Ⓐ
(Go to next page.)

Engine Control Module (ECM)-ECCS Control Module (Cont'd)

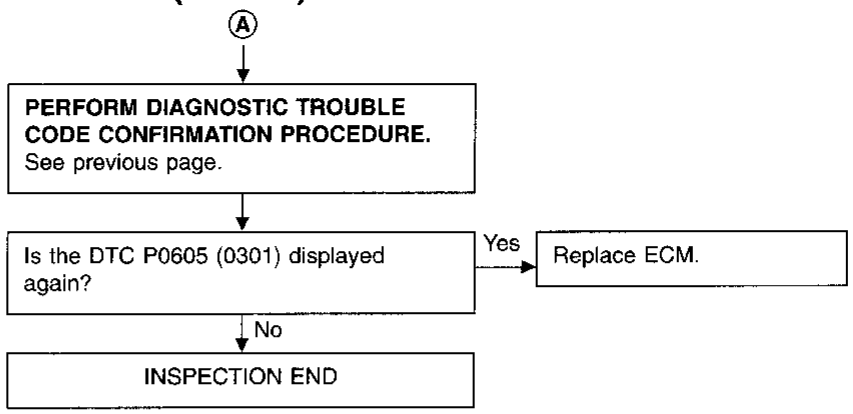

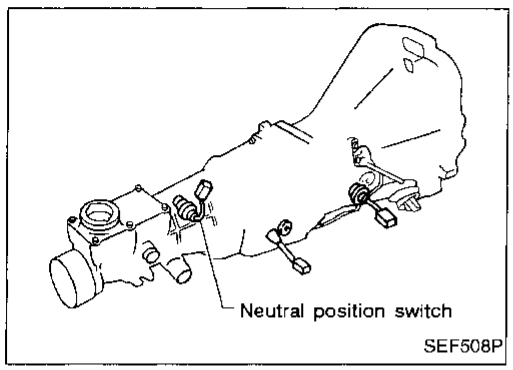

Park/Neutral Position Switch

COMPONENT DESCRIPTION

When the gear position is "P" (A/T models only) or "N", park/neutral position is "ON".
ECM detects the position because the continuity of the line (the "ON" signal) exists.

ECM TERMINALS AND REFERENCE VALUE

Specification data are reference values and are measured between each terminal and ㊸ (ECCS ground).

TERMINAL NO.	WIRE COLOR	ITEM	CONDITION	DATA (DC voltage)
22	L/B	Neutral position switch (M/T models) Inhibitor switch (A/T models)	Ignition switch "ON" — Gear position is "Neutral position" (M/T models) — Gear position is "N" or "P" (A/T models)	Approximately 0V
			Ignition switch "ON" — Except the above gear position	Approximately 5V

CONSULT REFERENCE VALUE IN DATA MONITOR MODE

Specification data are reference values

MONITOR ITEM	CONDITION		SPECIFICATION
P/N POSI SW	● Ignition switch: ON	Shift lever "P" or "N"	ON
		Except above	OFF

ON BOARD DIAGNOSIS LOGIC

Diagnostic Trouble Code No.	Malfunction is detected when	Check Items (Possible cause)
P0705 1003	● The signal of the park/neutral position switch is not changed in the process of engine starting and driving.	● Harness or connectors (The neutral position switch or inhibitor switch circuit is open or shorted.) ● Neutral position switch (M/T models) ● Inhibitor switch (A/T models)

Park/Neutral Position Switch (Cont'd)

OVERALL FUNCTION CHECK

Use this procedure to check the overall function of the park/neutral position switch circuit. During this check, a 1st trip DTC might not be confirmed.

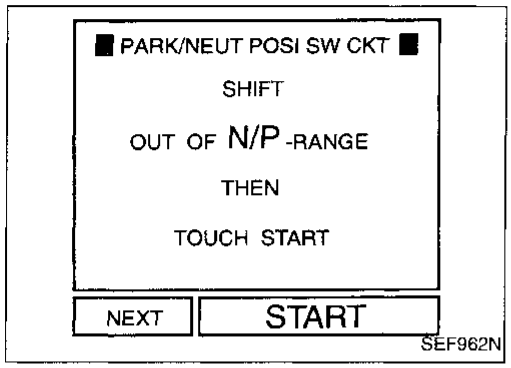

1) Turn ignition switch "ON".
2) Perform "PARK/NEUT POSI SW CKT" in "FUNCTION TEST" mode with CONSULT.

OR

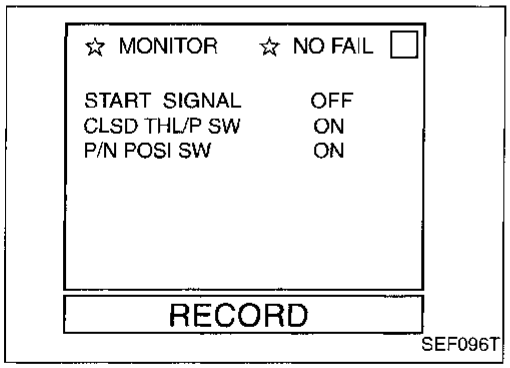

2) Select "P/N POSI SW" in "DATA MONITOR" mode with CONSULT.
3) Check the "P/N POSI SW" signal under the following conditions.

Condition (Gear position)	Known good signal
"N" and "P" (A/T only) position	ON
Except the above position	OFF

OR

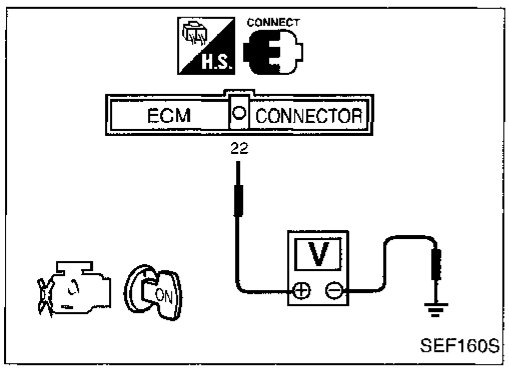

1) Turn ignition switch "ON".
2) Check voltage between ECM terminal ㉒ and body ground under the following conditions.

Condition (Gear position)	Voltage (V) (Known good data)
"N" and "P" (A/T only) position	Approx. 0
Except the above position	Approx. 5

EC-PNP/SW-01

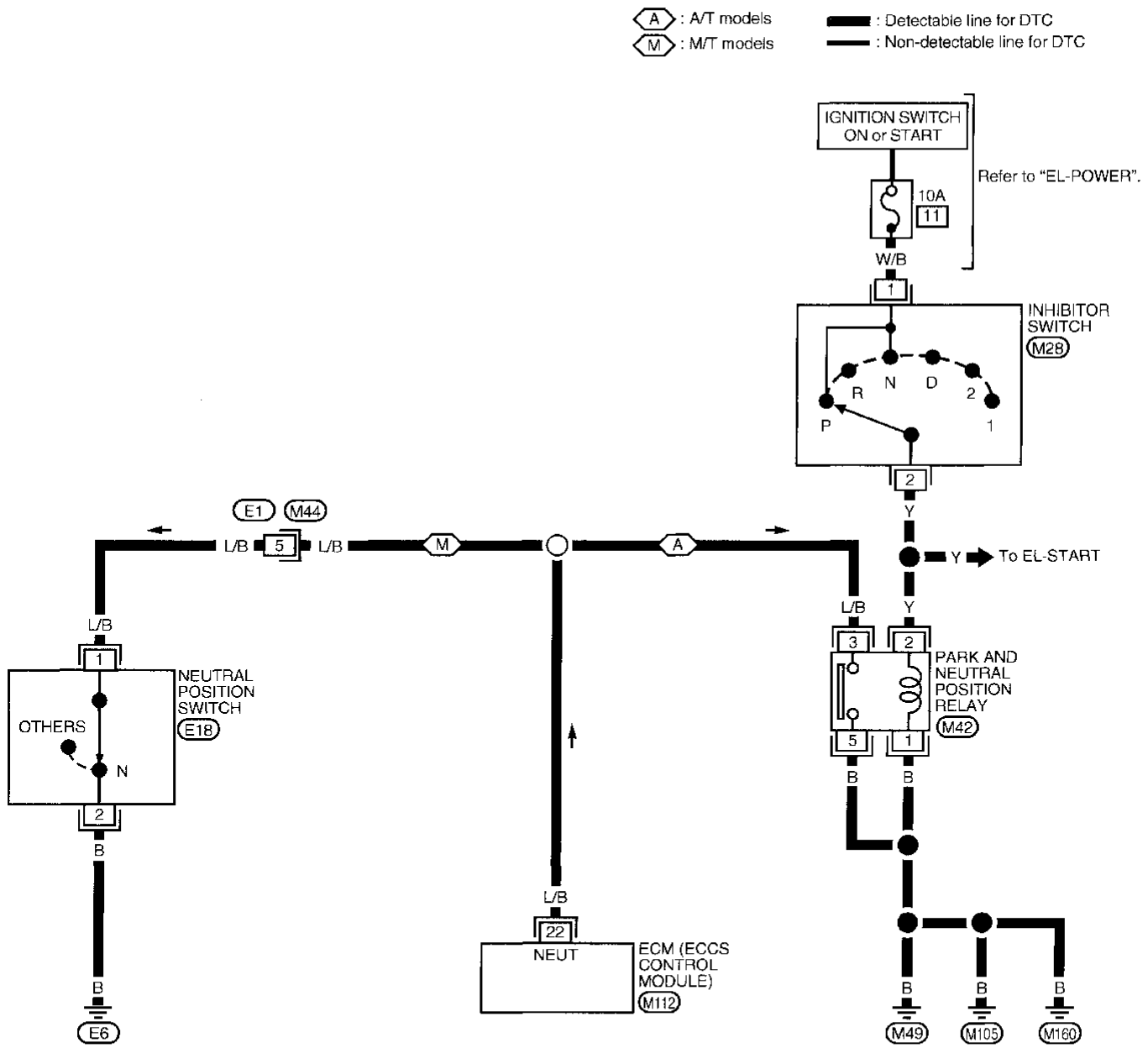

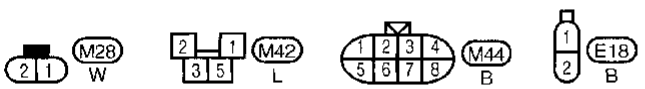

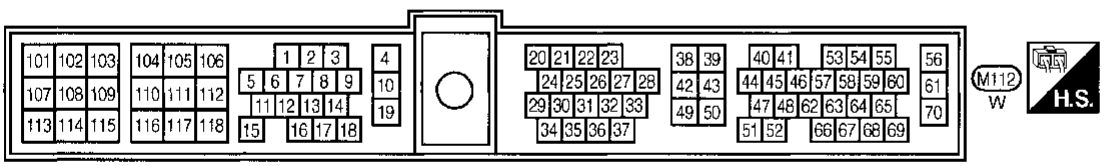

AEC313A

Park/Neutral Position Switch (Cont'd)

DIAGNOSTIC PROCEDURE

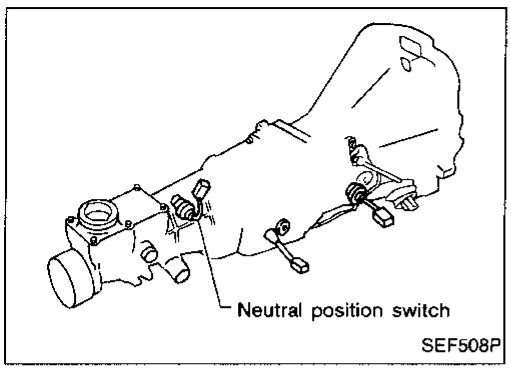

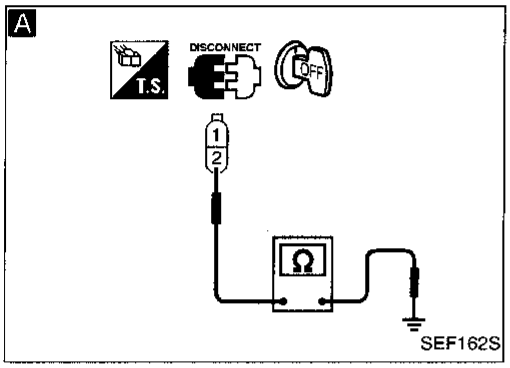

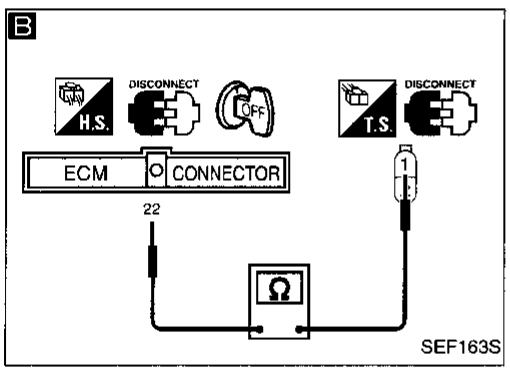

Neutral position switch

INSPECTION START

↓

A

CHECK GROUND CIRCUIT.
1. Disconnect neutral position switch harness connector.
2. Check harness continuity between terminal ② and body ground.
   Continuity should exist.
   If OK, check harness for short.

NG → Repair harness or connectors.

OK ↓

B

CHECK INPUT SIGNAL CIRCUIT.
1. Disconnect ECM harness connector.
2. Check harness continuity between ECM terminal ㉒ and terminal ①.
   Continuity should exist.
   If OK, check harness for short.

NG → Check the following.
- Harness connectors (E1), (M44)
- Harness for open or short between ECM and neutral position switch

If NG, repair harness or connectors.

OK ↓

CHECK COMPONENT
(Neutral position switch).
Refer to MT section

NG → Replace neutral position switch.

OK ↓

Disconnect and reconnect harness connectors in the circuit. Then retest.

Trouble is not fixed. ↓

Check ECM pin terminals for damage and check the connection of ECM harness connector. Reconnect ECM harness connector and retest.

↓

INSPECTION END

Park/Neutral Position Switch (Cont'd)

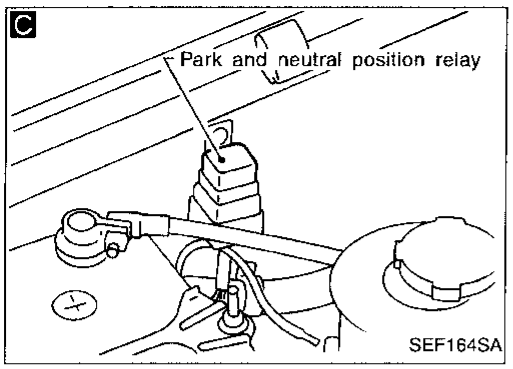

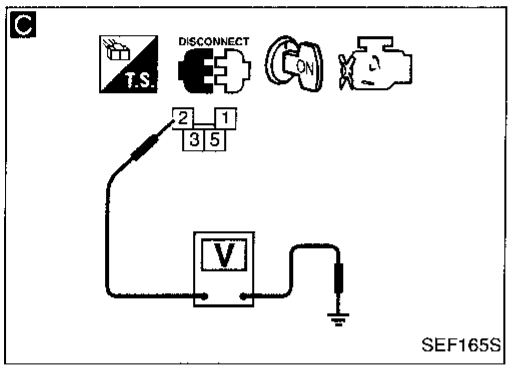

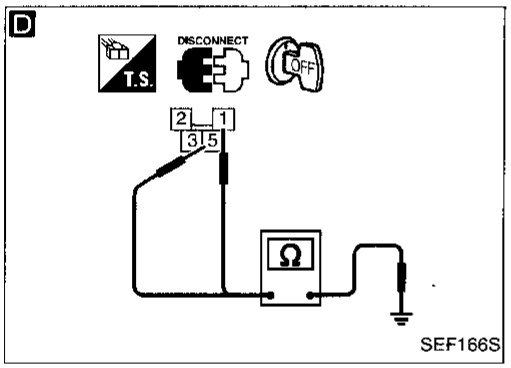

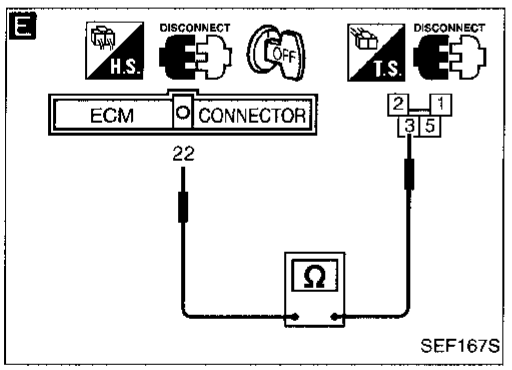

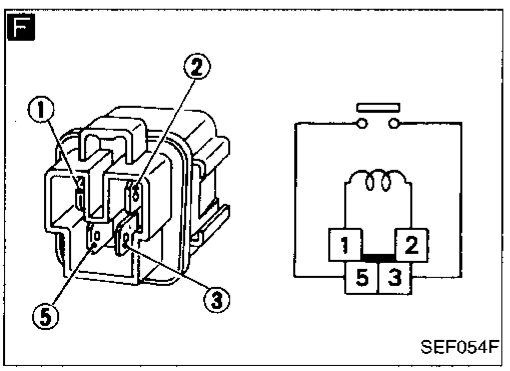

Inhibitor switch (A/T models)

INSPECTION START

C

CHECK POWER SUPPLY.
1. Turn ignition switch "OFF".
2. Disconnect park and neutral position relay.
3. Make sure that selector lever is in "P" or "N" position.
4. Turn ignition switch "ON".
5. Check voltage between terminal ② and ground with CONSULT or tester.
   Voltage: Battery voltage

NG → Check the following.
- 10A fuse
- Harness for open or short between inhibitor switch and fuse
- Harness for open or short between inhibitor switch and park and neutral position relay

If NG, repair harness or connector.

OK → CHECK COMPONENT (INHIBITOR SWITCH). Refer to AT section.

OK ↓

D

CHECK GROUND CIRCUIT.
1. Turn ignition switch "OFF".
2. Check harness continuity between relay terminals ①, ⑤ and engine ground.
   Continuity should exist.
   If OK, check harness for short.

NG → Repair harness or connectors.

OK ↓

E

CHECK INPUT SIGNAL CIRCUIT.
1. Disconnect ECM harness connector.
2. Check harness continuity between ECM terminal ㉒ and relay terminal ③.
   Continuity should exist.
   If OK, check harness for short.

NG → Repair harness or connectors.

OK ↓

F

PARK AND NEUTRAL POSITION RELAY
1. Apply 12V direct current between relay terminals ① and ②.
2. Check continuity between relay terminals ③ and ⑤.
   12V (① - ②) applied:
   Continuity exists.
   No voltage applied:
   No continuity

NG → Replace park and neutral position relay.

OK ↓

Disconnect and reconnect harness connectors in the circuit. Then retest.

Trouble is not fixed. ↓

Check ECM pin terminals for damage and check the connection of ECM harness connector. Reconnect ECM harness connector and retest. → INSPECTION END

Manifold Absolute Pressure (MAP)/Barometric Pressure (BARO) Switch Solenoid Valve

SYSTEM DESCRIPTION

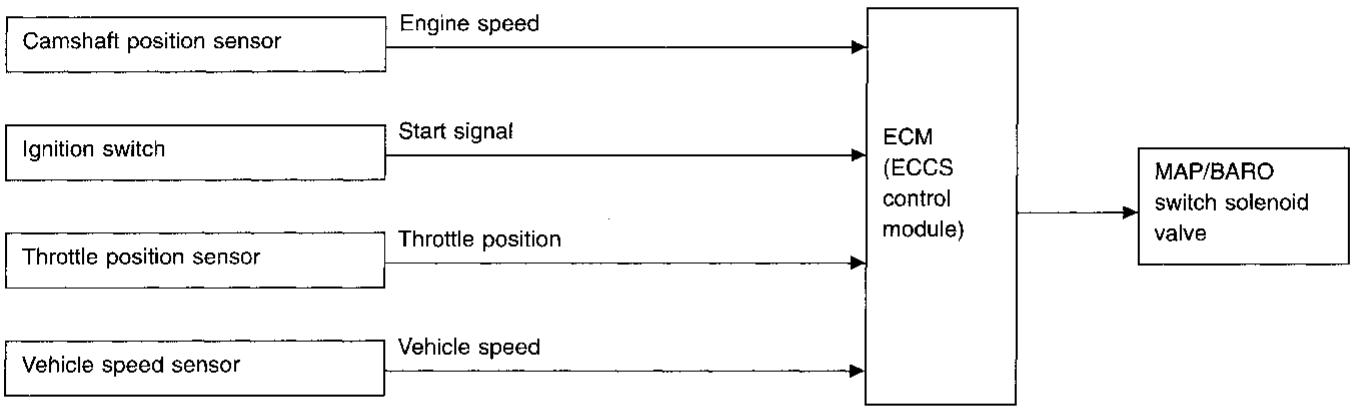

This system allows the absolute pressure sensor to monitor either ambient barometric pressure or intake manifold pressure. The MAP/BARO switch solenoid valve switches between two passages by ON-OFF pulse signals from the ECM. (One passage is from the intake air duct, the other is from the intake manifold.) Either ambient barometric pressure or intake manifold pressure is applied to the absolute pressure sensor.

Solenoid	Conditions
ON	● Ignition switch is "ON". (Engine is not running.) ● For 5 seconds after starting engine or ● More than 5 minutes after the solenoid valve shuts OFF. and ● Throttle valve is shut or almost fully shut for more than 5 seconds and ● Vehicle speed is less than 100 km/h (62 MPH).

ECM TERMINALS AND REFERENCE VALUE

Specification data are reference values and are measured between each terminal and ㊸ (ECCS ground).

TERMINAL NO.	WIRE COLOR	ITEM	CONDITION	DATA (DC voltage)
116	W/R	MAP/BARO switch solenoid valve	Ignition switch "ON"	0 - 1V
			Engine is running. └ Idle speed (More than 5 seconds after starting engine)	BATTERY VOLTAGE (11 - 14V)

CONSULT REFERENCE VALUE IN DATA MONITOR MODE

Specification data are reference values.

MONITOR ITEM	CONDITION	SPECIFICATION
MAP/BARO SW/V	● Ignition switch: ON	BARO
	● Engine speed: Idle (More than 5 seconds after starting engine)	MAP

Manifold Absolute Pressure (MAP)/Barometric Pressure (BARO) Switch Solenoid Valve (Cont'd)

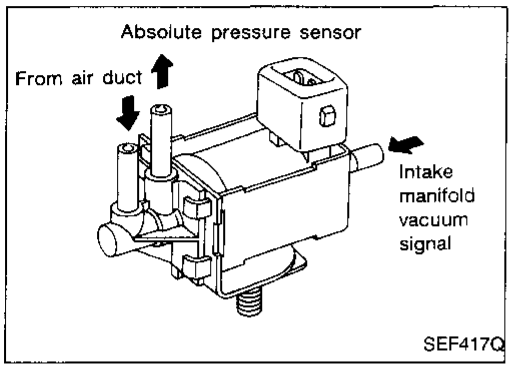

COMPONENT DESCRIPTION

The MAP/BARO switch solenoid valve switches its air flow passage according to the voltage signal sent from the ECM. When voltage is supplied from the ECM, the MAP/BARO switch solenoid turns "ON". Then, the absolute pressure sensor can monitor the ambient barometric pressure. When voltage is not supplied from the ECM, the MAP/BARO switch solenoid valve turns "OFF". Then, the sensor monitors intake manifold pressure.

ON BOARD DIAGNOSIS LOGIC

Diagnostic Trouble Code No.	Malfunction is detected when	Check Items (Possible Cause)
P1105 1302	• MAP/BARO switch solenoid valve receives the voltage supplied though ECM does not supply the voltage to the valve. • There is little difference between MAP/BARO switch solenoid valve input voltage at ambient barometric pressure and voltage at intake manifold pressure.	• Harness or connectors (MAP/BARO switch solenoid valve circuit is open or shorted.) • Hoses (Hoses are clogged or disconnected.) • Absolute pressure sensor • MAP/BARO switch solenoid valve

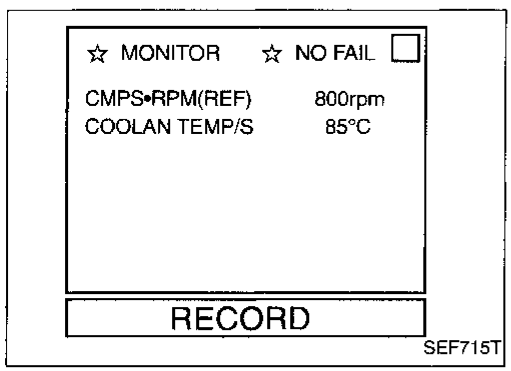

DIAGNOSTIC TROUBLE CODE CONFIRMATION PROCEDURE

1) Start engine and warm it up sufficiently.
2) Turn ignition switch "OFF" and wait at least 7 seconds.
3) Turn ignition switch "ON" and select "DATA MONITOR" mode with CONSULT.
4) Start engine and let it idle.
5) Wait at least 15 seconds.

OR

1) Start engine and warm it up sufficiently.
2) Turn ignition switch "OFF" and wait at least 7 seconds.
3) Start engine and let it idle.
4) Wait at least 15 seconds.
5) Select "MODE 7" with GST.

OR

1) Start engine and warm it up sufficiently.
2) Turn ignition switch "OFF" and wait at least 7 seconds.
3) Start engine and let it idle.
4) Wait at least 15 seconds.
5) Turn ignition switch "OFF", wait at least 7 seconds and then turn "ON".
6) Perform "Diagnostic Test Mode II (Self-diagnostic results)" with ECM.

Manifold Absolute Pressure (MAP)/Barometric Pressure (BARO) Switch Solenoid Valve (Cont'd)

EC-SW/V-01

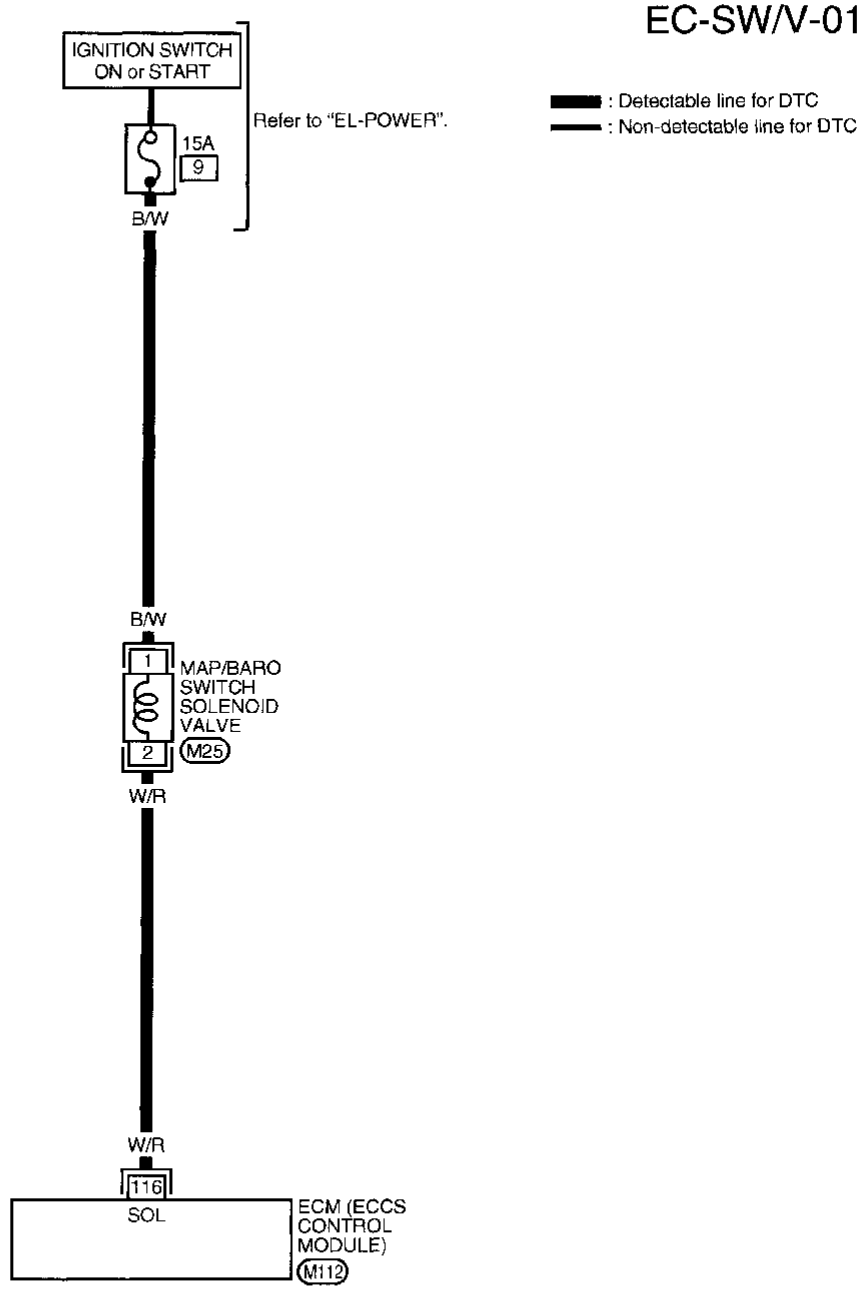

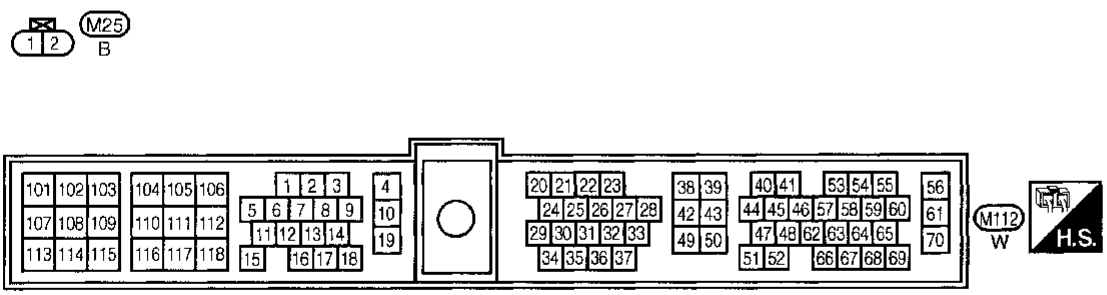

AEC314A

Manifold Absolute Pressure (MAP)/Barometric Pressure (BARO) Switch Solenoid Valve (Cont'd)

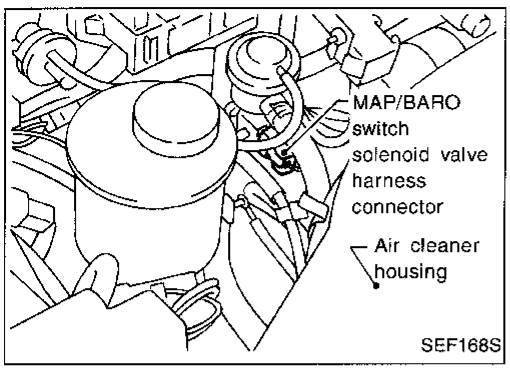

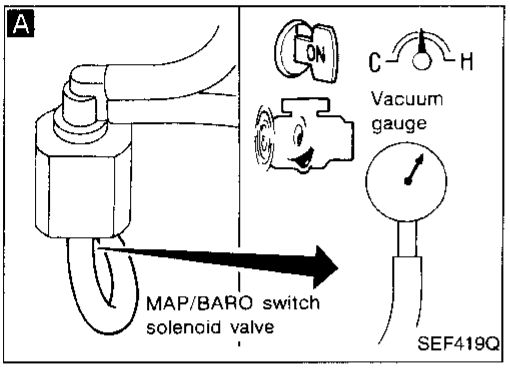

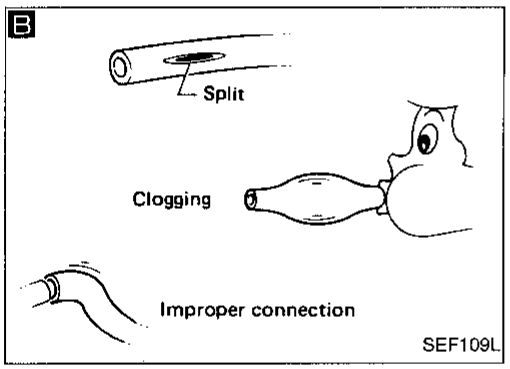

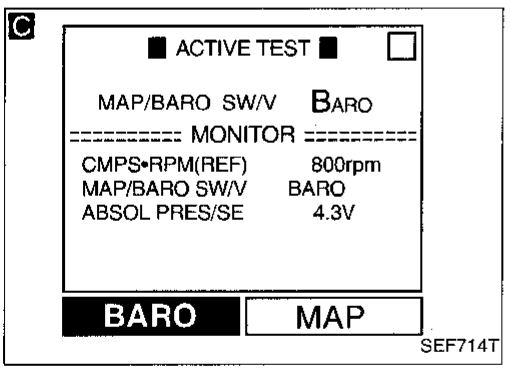

DIAGNOSTIC PROCEDURE

INSPECTION START

A

CHECK VACUUM SOURCE TO MAP/BARO SWITCH SOLENOID VALVE.
1. Start engine and warm it up sufficiently.
2. Disconnect vacuum hose connected to MAP/BARO switch solenoid valve.
3. Check the vacuum pressure with vacuum gauge at idle speed.

Vacuum pressure:
Approx. –66.7 kPa (–500 mmHg, –19.69 inHg, –9.67 psi)

NG → CHECK VACUUM HOSE. Check vacuum hose for clogging, cracks or improper connection. If NG, repair or replace the hose.

OK → CHECK INTAKE SYSTEM. Check the intake system for air leaks.

OK ↓

B

CHECK HOSE BETWEEN ABSOLUTE PRESSURE SENSOR AND MAP/BARO SWITCH SOLENOID VALVE.
1. Turn ignition switch "OFF".
2. Check hose for clogging, cracks or improper connection.

NG → Repair or reconnect the hose.

OK (without) ↓ Ⓑ (Go to next page.)

OK (with) → **C**

C

CHECK POWER SUPPLY AND OUTPUT SIGNAL CIRCUIT.
1. Turn ignition switch "ON".
2. Select "MAP/BARO SW/V" in "ACTIVE TEST" mode with CONSULT.
3. Touch "MAP" and "BARO" alternatively.
4. Check for operating sound.

NG → Ⓑ

OK → Ⓐ (Go to next page.)

Manifold Absolute Pressure (MAP)/Barometric Pressure (BARO) Switch Solenoid Valve (Cont'd)

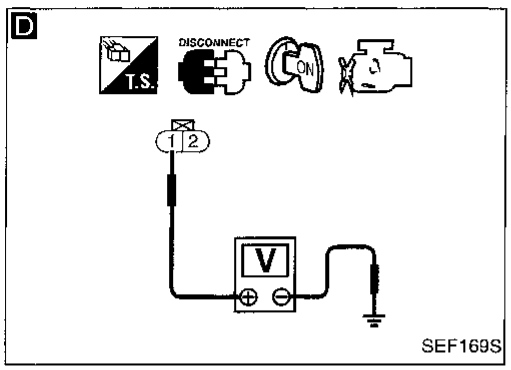

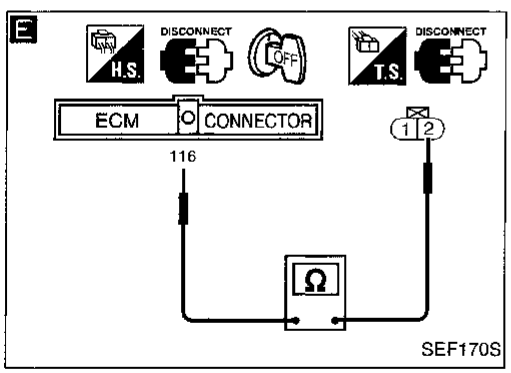

Ⓑ

D

CHECK POWER SUPPLY.
1. Turn ignition switch "OFF".
2. Disconnect MAP/BARO switch solenoid valve harness connector.
3. Turn ignition switch "ON".
4. Check voltage between terminal ① and ground with CONSULT or tester.
   Voltage: Battery voltage
   If OK, check harness for short.

NG → Check the following.
- 15A fuse
- Harness for open or short between MAP/BARO switch solenoid valve and fuse

If NG, repair harness or connectors.

OK ↓

E

CHECK OUTPUT SIGNAL CIRCUIT.
1. Turn ignition switch "OFF".
2. Disconnect ECM harness connector.
3. Check harness continuity between ECM terminal (116) and terminal ②.
   Continuity should exist.
   If OK, check harness for short.

NG → Repair harness or connectors.

OK ↓

Ⓐ

CHECK COMPONENT
(Absolute pressure sensor).
Refer to "COMPONENT INSPECTION" of "TROUBLE DIAGNOSIS FOR DTC P0105", EC-106.

NG → Replace absolute pressure sensor.

OK ↓

CHECK COMPONENT
(MAP/BARO switch solenoid valve).
Refer to "COMPONENT INSPECTION" on next page.

NG → Replace MAP/BARO switch solenoid valve.

OK ↓

Disconnect and reconnect harness connectors in the circuit. Then retest.

Trouble is not fixed. ↓

Check ECM pin terminals for damage and check the connection of ECM harness connector. Reconnect ECM harness connector and retest.

↓

INSPECTION END

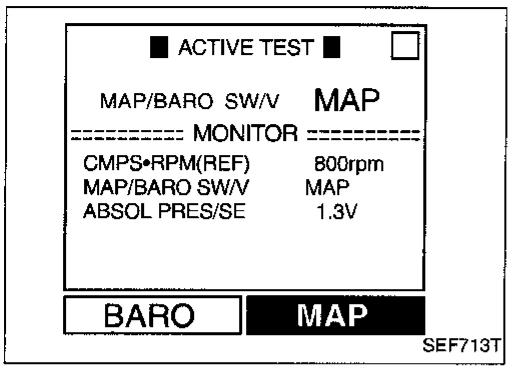

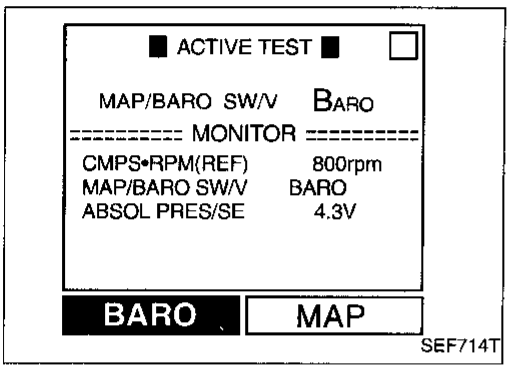

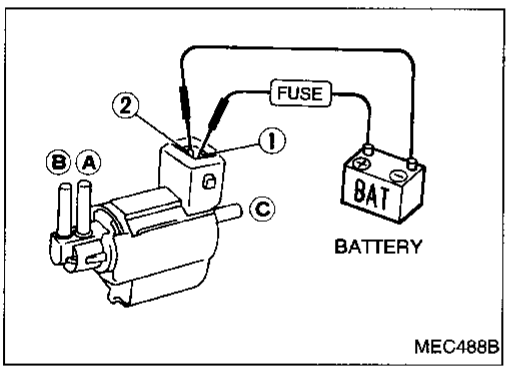

Manifold Absolute Pressure (MAP)/Barometric Pressure (BARO) Switch Solenoid Valve (Cont'd)

COMPONENT INSPECTION

MAP/BARO switch solenoid valve

1. Start engine and warm it up sufficiently.
2. Perform "MAP/BARO SW/V" in "ACTIVE TEST" mode with CONSULT.
3. Check the following.
   - When "MAP" is selected, "ABSOL PRES/SE" indicates approximately 1.3V.
   - When "BARO" is selected, "ABSOL PRES/SE" indicates approximately 4.3V.
4. If NG, replace solenoid valve.

OR

1. Remove MAP/BARO switch solenoid valve.
2. Check air passage continuity.

Condition	Air passage continuity between Ⓐ and Ⓑ	Air passage continuity between Ⓐ and Ⓒ
12V direct current supply between terminals ① and ②	Yes	No
No supply	No	Yes

3. If NG, replace solenoid valve.

Swirl Control Valve Control Solenoid Valve

SYSTEM DESCRIPTION

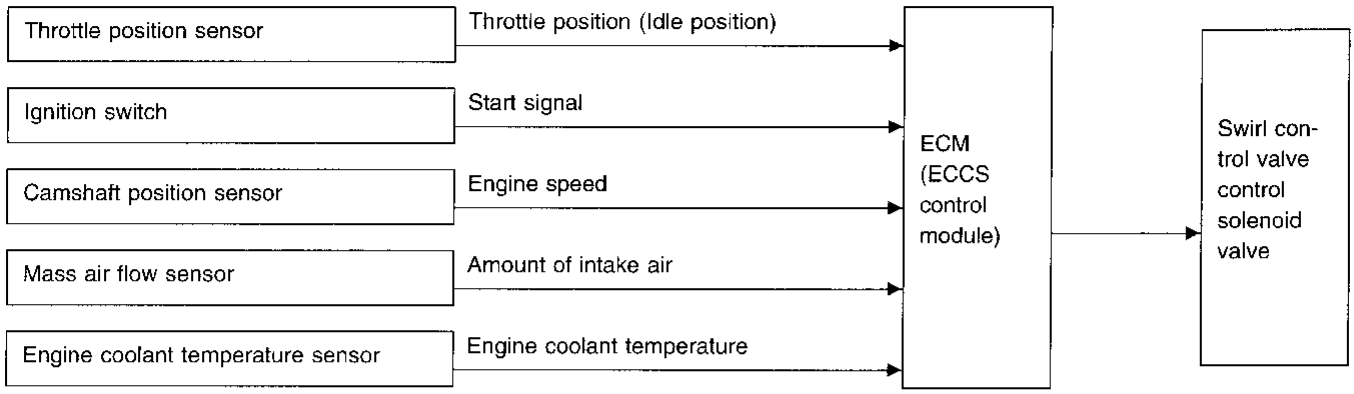

This system has a swirl control valve in the intake passage of each cylinder.
While idling and during low engine speed operation, the swirl control valve closes. Thus the velocity of the air in the intake passage increases, promoting the vaporization of the fuel and producing a swirl in the combustion chamber.
Because of this operation, this system tends to increase the burning speed of the gas mixture, improve fuel consumption, and increase the stability in running conditions.
Also, except when idling and during low engine speed operation, this system opens the swirl control valve. In this condition, this system tends to increase power by improving intake efficiency via reduction of intake flow resistance, intake flow.

The solenoid valve controls swirl control valve's shut/open condition. This solenoid valve is operated by the ECM.

Throttle position switch (Idle position)	Engine speed	Swirl control valve control solenoid valve	Swirl control valve
ON	Below 3,600 rpm	ON	Closed
OFF	Less than 3,200 rpm	ON	Closed
	More than 4,000 rpm	OFF	Open

When engine coolant temperature is below 0°C (32°F) swirl control valve is kept open.

ECM TERMINALS AND REFERENCE VALUE

Specification data are reference values and are measured between each terminal and 43 (ECCS ground).

TERMINAL NO.	WIRE COLOR	ITEM	CONDITION	DATA (DC voltage)
111	GY	Swirl control valve control solenoid valve	Engine is running. — Idle speed	0 - 1V
			Engine is running. — Engine speed is above 3,600 rpm.	BATTERY VOLTAGE (11 - 14V)

CONSULT REFERENCE VALUE IN DATA MONITOR MODE

Specification data are reference values.

MONITOR ITEM	CONDITION	SPECIFICATION
SWRL CONT S/V	● Engine is running at a speed of less than 3,600 rpm.	ON
	● Except above	OFF

Swirl Control Valve Control Solenoid Valve (Cont'd)

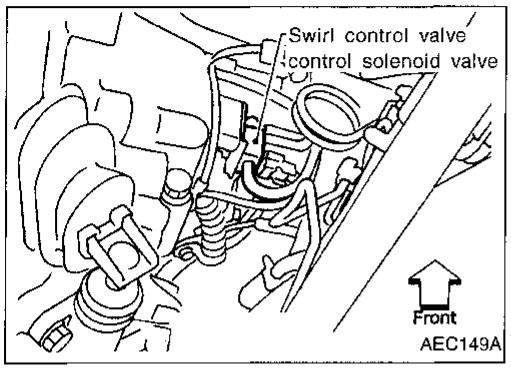

COMPONENT DESCRIPTION

Swirl control valve control solenoid valve

The swirl control valve control solenoid valve responds to signals from the ECM. When the ECM sends an ON (ground) signal, the solenoid valve is bypassed to apply intake manifold vacuum to the swirl control valve actuator. This operation closes the swirl control valve. When the ECM sends an OFF signal, the vacuum signal is cut and the swirl control valve opens.

ON BOARD DIAGNOSIS LOGIC

Diagnostic Trouble Code No.	Malfunction is detected when ...	Check Items (Possible Cause)
P1130 1004	A) An improper voltage signal is sent to ECM through swirl control valve control solenoid valve.	● Harness or connectors (The swirl control valve control solenoid valve circuit is open or shorted.)
	B) The vacuum signal is not sent to swirl control valve under specified driving conditions, even though swirl control valve control solenoid valve is ON.	● Harness or connector (The swirl control valve control solenoid valve circuit is open.) ● Swirl control valve control solenoid valve ● Intake system (Intake air leaks) ● Hoses ● Swirl control valve ● Swirl control valve control vacuum check switch ● One-way valve ● Vacuum tank
	C) The vacuum signal is sent to swirl control valve even though swirl control valve control solenoid valve is OFF.	● Harness or connector (The swirl control valve control solenoid valve circuit is shorted.) ● Blocked vacuum pipe or hose ● Swirl control valve control solenoid valve

Note: If DTC P1130 (1004) and P1165 (0112) are displayed, first perform TROUBLE DIAGNOSIS FOR DTC P1165 (0112). (See EC-251.)

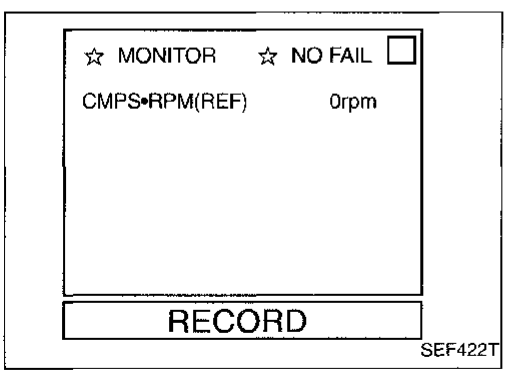

DIAGNOSTIC TROUBLE CODE CONFIRMATION PROCEDURE

Perform "Procedure for malfunction A" first. If the 1st trip DTC cannot be confirmed, perform "Procedure for malfunction B and C".

Procedure for malfunction A

1) Turn ignition switch "ON".
2) Select "DATA MONITOR" mode with CONSULT.
3) Wait at least 5 seconds.

OR

Swirl Control Valve Control Solenoid Valve (Cont'd)

1) Turn ignition switch "ON" and wait at least 5 seconds.
2) Select "MODE 7" with GST.

OR

1) Turn ignition switch "ON" and wait at least 5 seconds.
2) Turn ignition switch "OFF", wait at least 7 seconds and then turn "ON".
3) Perform "Diagnostic Test Mode II (Self-diagnostic results)" with ECM.

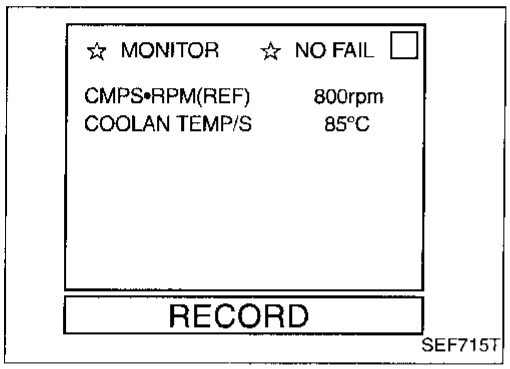

Procedure for malfunction B

1) Start engine and warm it up sufficiently.
2) Turn ignition switch "OFF" and wait at least 7 seconds.
3) Turn ignition switch "ON" again and select "DATA MONITOR" mode with CONSULT.
4) Start engine and run it for at least 20 seconds at idle speed.

OR

1) Start engine and warm it up sufficiently.
2) Turn ignition switch "OFF" and wait at least 7 seconds.
3) Start engine again and run it for at least 20 seconds at idle speed.
4) Select "MODE 7" with GST.

OR

1) Start engine and warm it up sufficiently.
2) Turn ignition switch "OFF" and wait at least 7 seconds.
3) Start engine and run it for at least 20 seconds at idle speed.
4) Turn ignition switch "OFF", wait at least 7 seconds and then turn "ON".
5) Perform "Diagnostic Test Mode II (Self-diagnostic results)" with ECM.

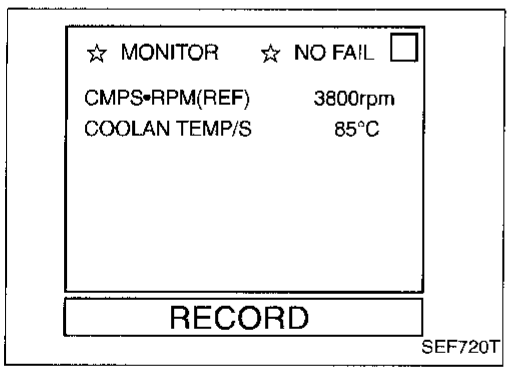

Procedure for malfunction C

1) Start engine and warm it up sufficiently.
2) Turn ignition switch "OFF" and wait at least 7 seconds.
3) Turn ignition switch "ON" again and select "DATA MONITOR" mode with CONSULT.
4) Start engine and run it for at least 20 seconds at 3,800 rpm under no load.

OR

1) Start engine and warm it up sufficiently.
2) Turn ignition switch "OFF" and wait at least 7 seconds.
3) Start engine and run it for at least 20 seconds at 3,800 rpm under no load.
4) Select "MODE 7" with GST.

OR

1) Start engine and warm it up sufficiently.
2) Turn ignition switch "OFF" and wait at least 7 seconds.
3) Start engine and run it for at least 20 seconds at 3,800 rpm under no load.
4) Turn ignition switch "OFF", wait at least 7 seconds and then turn "ON".
5) Perform "Diagnostic Test Mode II (Self-diagnostic results)" with ECM.

Swirl Control Valve Control Solenoid Valve (Cont'd)

EC-SWL/V-01

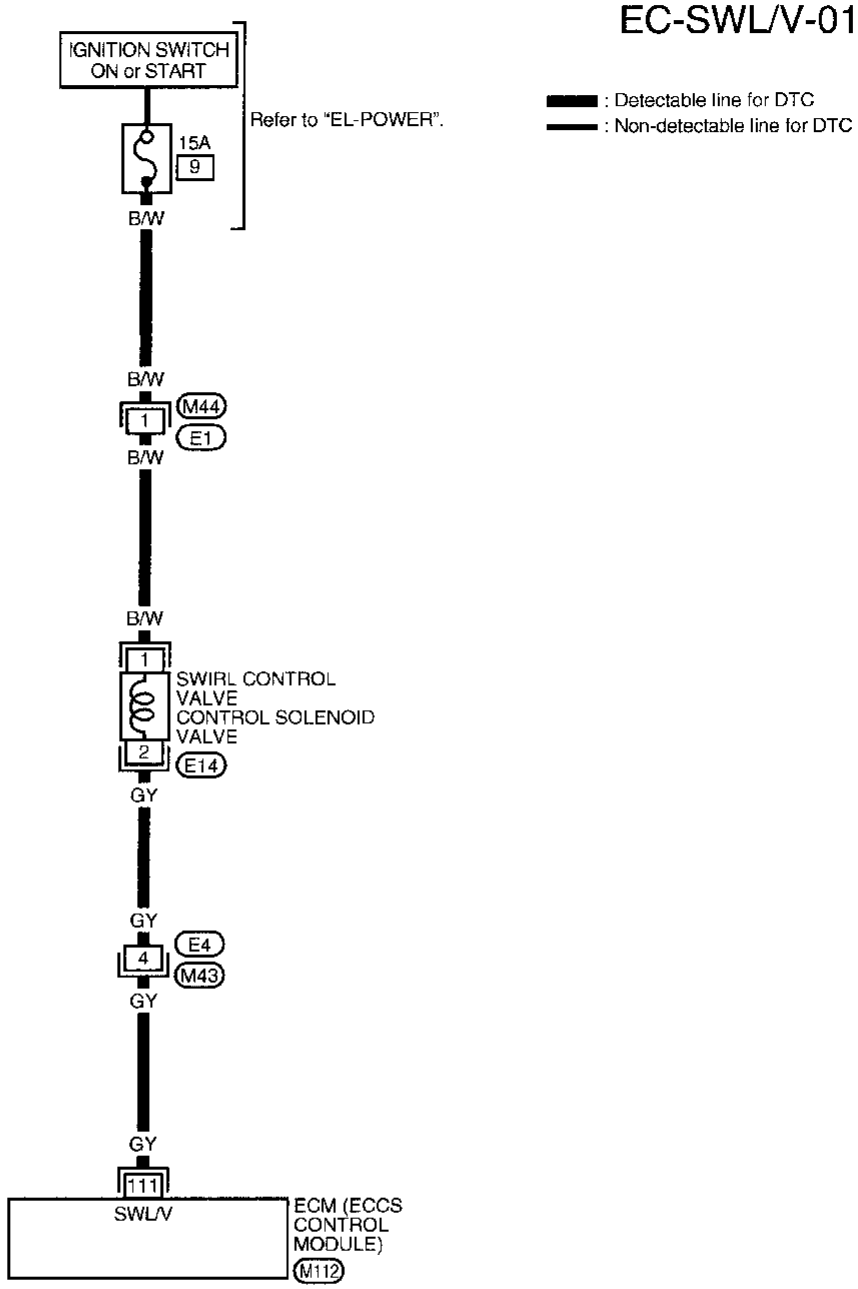

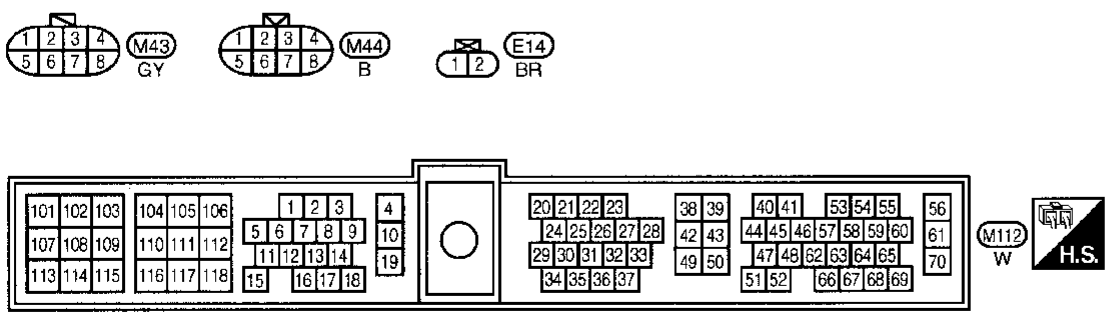

AEC315A

Swirl Control Valve Control Solenoid Valve (Cont'd)

DIAGNOSTIC PROCEDURE

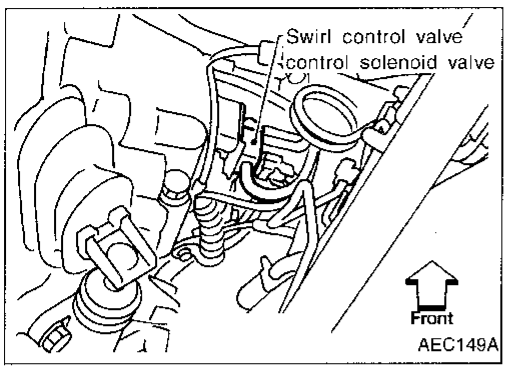

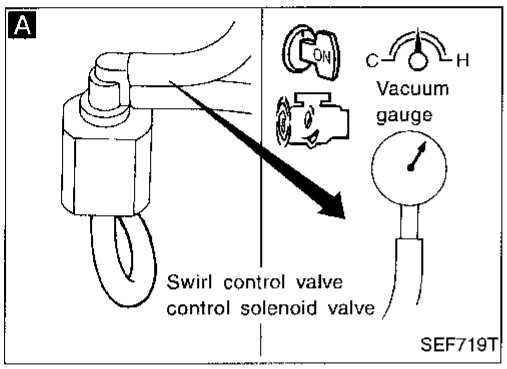

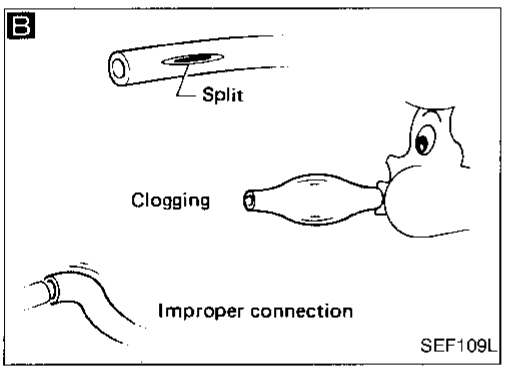

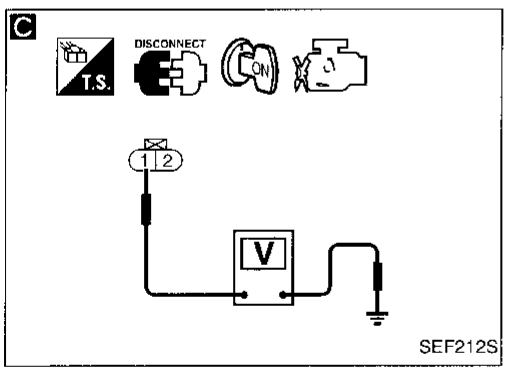

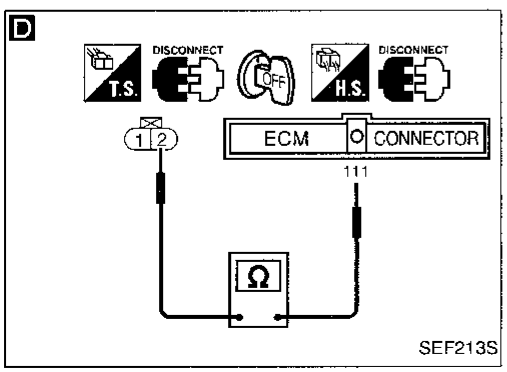

INSPECTION START

↓

CHECK INTAKE SYSTEM.
Check intake system for air leaks.

NG → Repair intake system.

OK ↓

A

CHECK VACUUM SOURCE TO SWIRL CONTROL VALVE CONTROL SOLENOID VALVE.
1. Start engine and warm it up sufficiently.
2. Disconnect vacuum hose connected to the solenoid valve.
3. Check the vacuum pressure with vacuum gauge with engine running at idle under no load.
   Manifold vacuum should exist.
   Minimum vacuum pressure:
   –22.7 kPa
   (–170 mmHg, –6.69 inHg)

NG → Repair vacuum hose.

OK ↓

B

CHECK HOSES BETWEEN SWIRL CONTROL VALVE CONTROL SOLENOID VALVE, SWIRL CONTROL VALVE CONTROL VACUUM CHECK SWITCH AND SWIRL CONTROL VALVE ACTUATOR.
1. Turn ignition switch "OFF".
2. Check hose for clogging, cracks or improper connection.

NG → Repair or reconnect the hose.

OK ↓

C

CHECK POWER SUPPLY.
1. Disconnect swirl control valve control solenoid valve harness connector.
2. Turn ignition switch "ON".
3. Check voltage between terminal ① and ground with CONSULT or tester.
   Voltage: Battery voltage

NG → Check the following.
- Harness connectors (E1), (M44)
- 15A fuse
- Harness for open or short between swirl control valve control solenoid valve and fuse

If NG, repair harness or connectors.

OK ↓

D

CHECK INPUT SIGNAL CIRCUIT.
1. Turn ignition switch "OFF".
2. Disconnect ECM harness connector.
3. Check continuity between terminal ② and ECM terminal (111).
   Continuity should exist.
   If OK, check harness for short.

NG → Check the following.
- Harness connectors (E4), (M43)
- Harness for open or short between swirl control valve control solenoid valve and ECM

If NG, repair harness or connectors.

OK ↓

Ⓐ
(Go to next page.)

Swirl Control Valve Control Solenoid Valve (Cont'd)

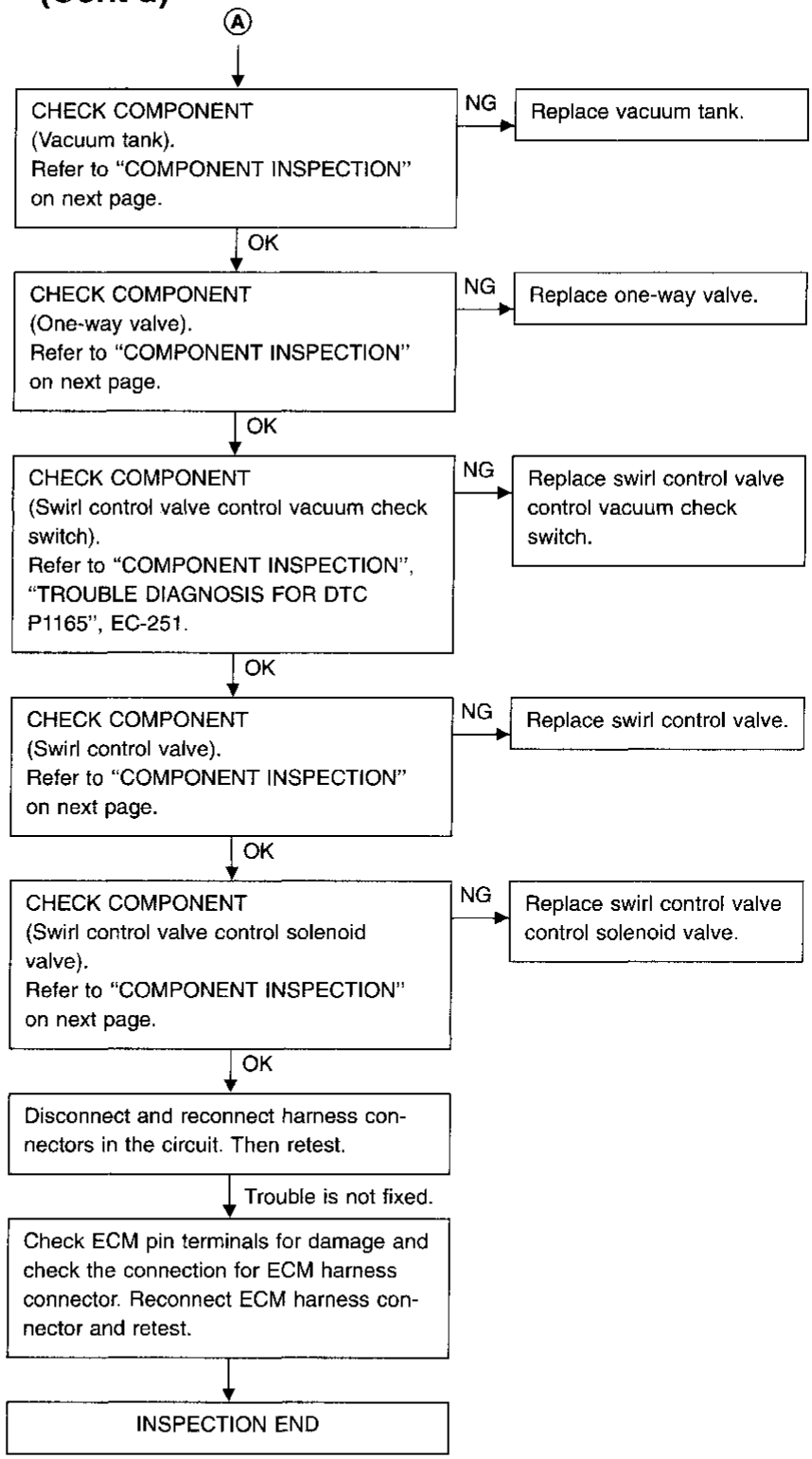

Swirl Control Valve Control Solenoid Valve (Cont'd)

COMPONENT INSPECTION

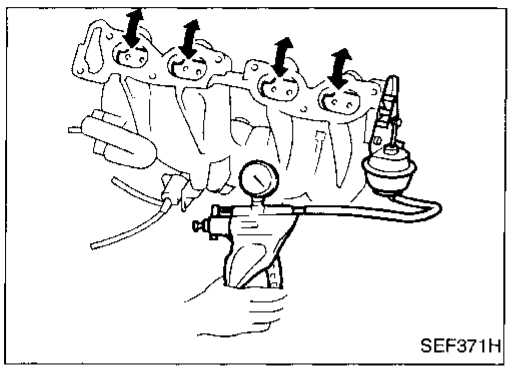

Swirl control valve

Supply vacuum to actuator and check swirl control valve operation.

Condition	Swirl control valve
Supply vacuum to actuator	Close
No supply	Open

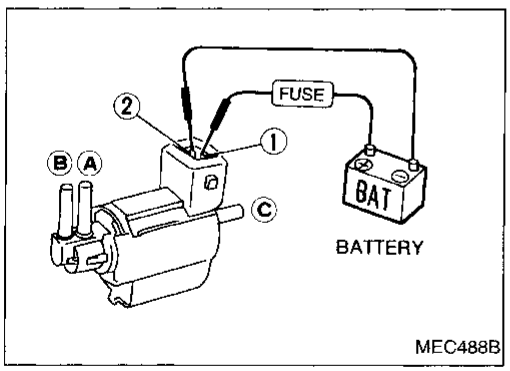

Swirl control valve control solenoid valve

Check solenoid valve air passage continuity.

Condition	Air passage continuity between Ⓐ and Ⓑ	Air passage continuity between Ⓐ and Ⓒ
12V direct current supply between terminals ① and ②	Yes	No
No supply	No	Yes

If NG, replace solenoid valve.

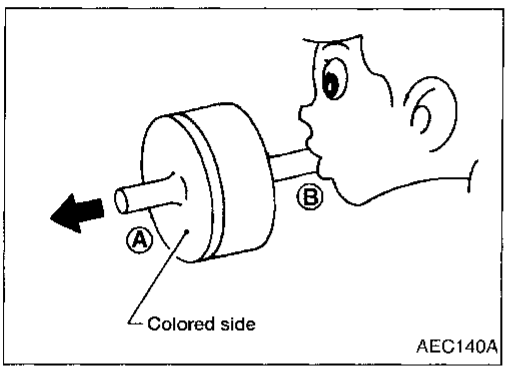

One-way valve

Check one-way valve air passage continuity.

Condition	Air passage continuity
Blow air from side B to A	Yes
Blow air from side A to B	No

If NG, replace one-way valve.

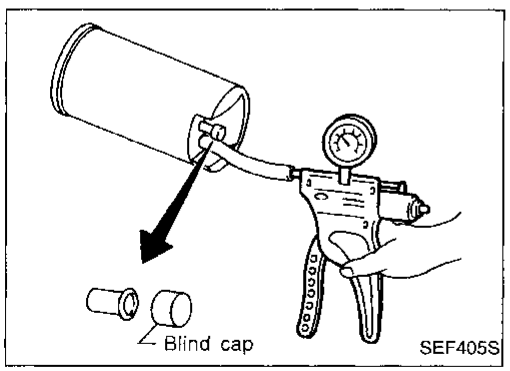

Vacuum tank

Check vacuum tank leakage.
Apply vacuum –80.0 kPa (–600 mmHg, –23.62 inHg, –11.60 psi). Then keep it for 10 seconds and check there is no leakage.

Swirl Control Valve Control Solenoid Valve (Cont'd)

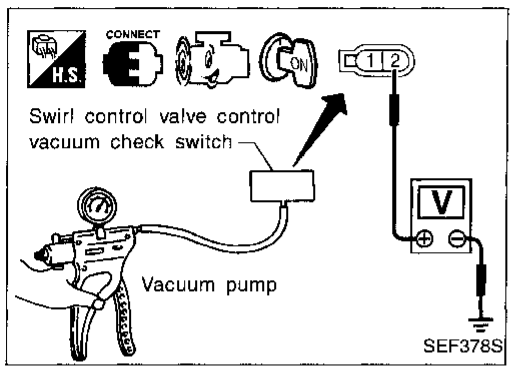

Swirl control valve control vacuum check switch

1. Disconnect swirl control valve control vacuum check switch harness connector.
2. Use vacuum pump to apply vacuum to swirl control valve control vacuum check switch as shown in figure.
3. Start engine.
4. Check voltage between terminal ② and engine ground with CONSULT or tester.

Pressure	Voltage (V)
More than −18.7 kPa (−140 mmHg, −5.51 inHg)	Engine ground
−18.7 to −22.7 kPa (−140 to −170 mmHg, −5.51 to −6.69 inHg)	Engine ground or Approx. 4.8
Less than −22.7 kPa (−170 mmHg, −6.69 inHg)	Approx. 4.8

5. If NG, replace swirl control valve control vacuum check switch.

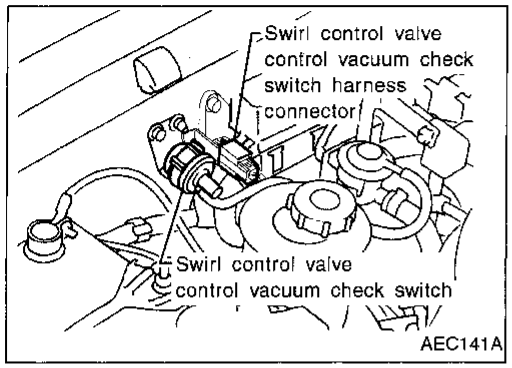

Swirl Control Valve Control Vacuum Check Switch

COMPONENT DESCRIPTION

The swirl control valve control vacuum check switch detects vacuum signal to the swirl control valve, and sends "ON" or "OFF" signal to the ECM.
When vacuum is supplied to the valve, the swirl control valve control vacuum check switch sends "OFF" signal to the ECM.
The swirl control valve control vacuum check switch is not used to control the engine system, it is used for on board diagnosis.

ECM TERMINALS AND REFERENCE VALUE

Specification data are reference values and are measured between each terminal and ㊸ (ECCS ground).

TERMINAL NO.	WIRE COLOR	ITEM	CONDITION	DATA (DC voltage)
32	R/Y	Swirl control valve control vacuum check switch	Engine is running. └ Engine speed is above 3,600 rpm.	0V
			Engine is running. └ Engine speed is less than 3,600 rpm.	Approximately 4.8V

ON BOARD DIAGNOSIS LOGIC

Diagnostic Trouble Code No.	Malfunction is detected when	Check Items (Possible cause)
P1165 0112	The swirl control valve control vacuum check switch remains "OFF" under specified engine conditions.	● Harness or connectors (Swirl control valve control vacuum check switch circuit is open.) ● Hoses (Hoses are connected incorrectly.) ● Swirl control valve control solenoid valve ● Swirl control valve control vacuum check switch

CONSULT REFERENCE VALUE IN DATA MONITOR MODE

Specification data are reference values.

MONITOR ITEM	CONDITION	SPECIFICATION
SWL CON VC SW	● Engine is running at a speed of less than 3,600 rpm.	OFF
	● Except above	ON

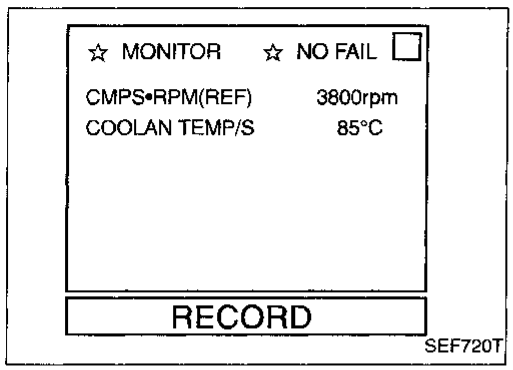

Swirl Control Valve Control Vacuum Check Switch (Cont'd)

DIAGNOSTIC TROUBLE CODE CONFIRMATION PROCEDURE

1) Start engine and warm it up sufficiently.
2) Turn ignition switch "OFF" and wait at least 7 seconds.
3) Turn ignition switch "ON".
4) Select "DATA MONITOR" mode with CONSULT.
5) Start engine and run it for at least 5 seconds at 3,800 rpm under no load.

OR

1) Start engine and warm it up sufficiently.
2) Turn ignition switch "OFF" and wait at least 7 seconds.
3) Start engine and run it for at least 5 seconds at 3,800 rpm under no load.
4) Select "MODE 7" with GST.

OR

1) Start engine and warm it up sufficiently.
2) Turn ignition switch "OFF" and wait at least 7 seconds.
3) Turn ignition switch "ON".
4) Start engine and run it for at least 5 seconds at 3,800 rpm under no load.
5) Turn ignition switch "OFF", wait at least 7 seconds and then turn "ON".
6) Perform "Diagnostic Test Mode II (Self-diagnostic results)" with ECM.

Swirl Control Valve Control Vacuum Check Switch (Cont'd)

EC-S/VCSW-01

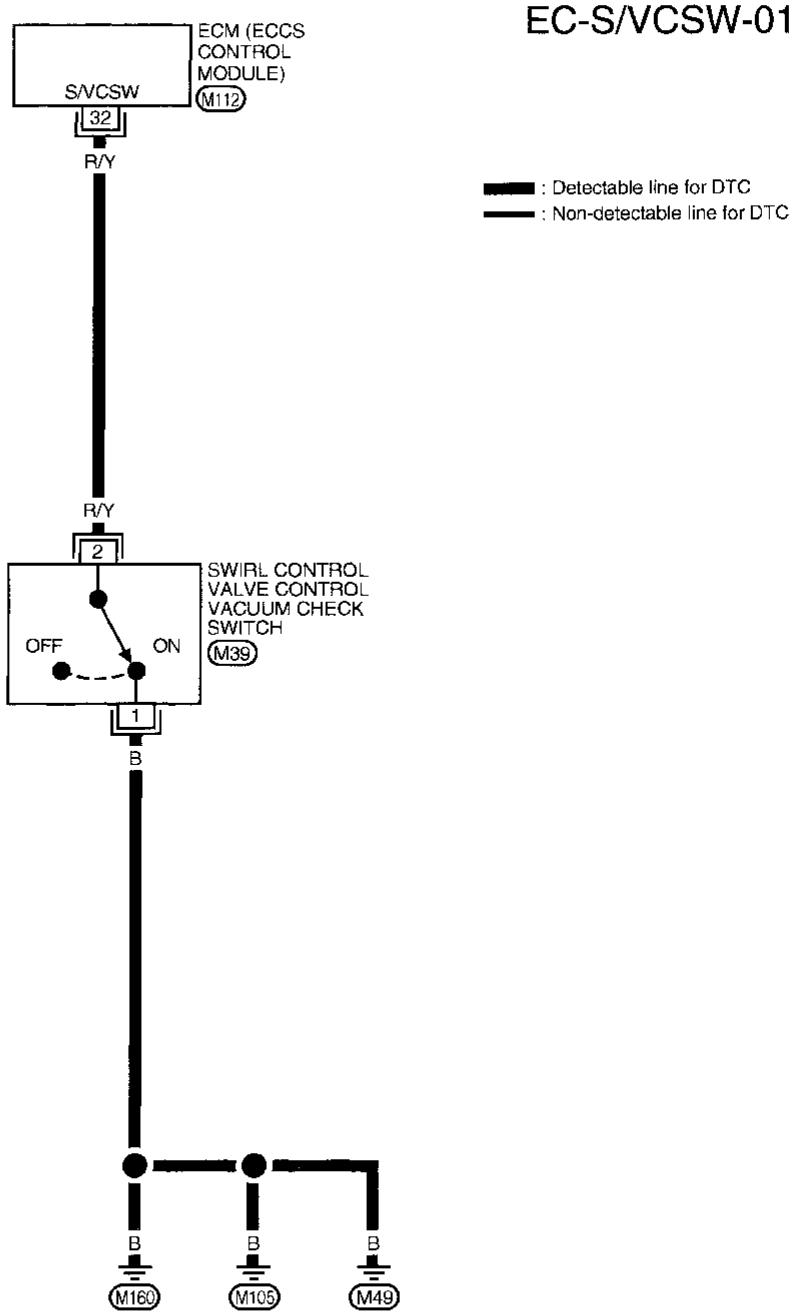

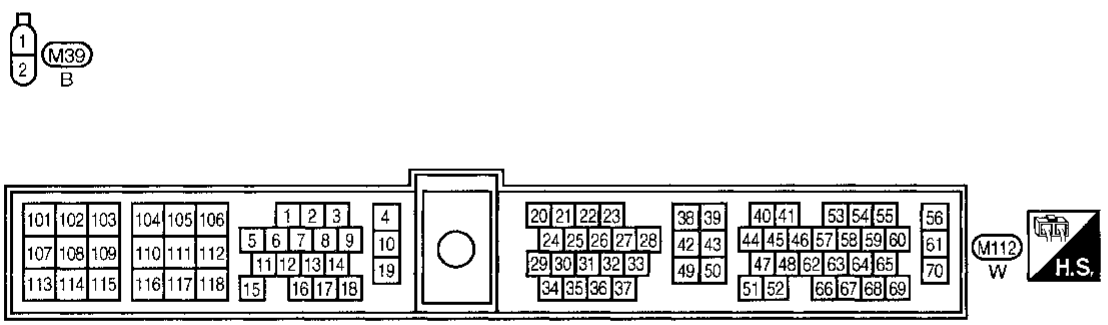

AEC061A

Swirl Control Valve Control Vacuum Check Switch (Cont'd)

DIAGNOSTIC PROCEDURE

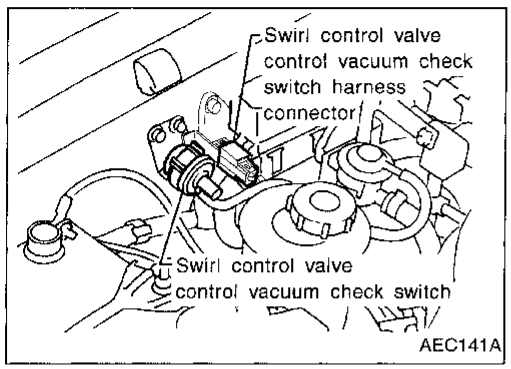

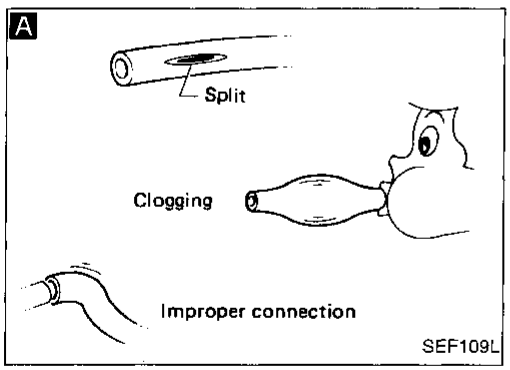

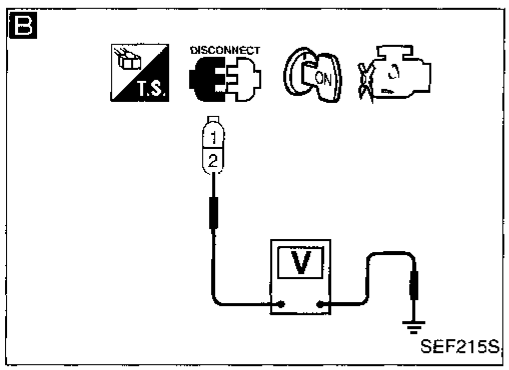

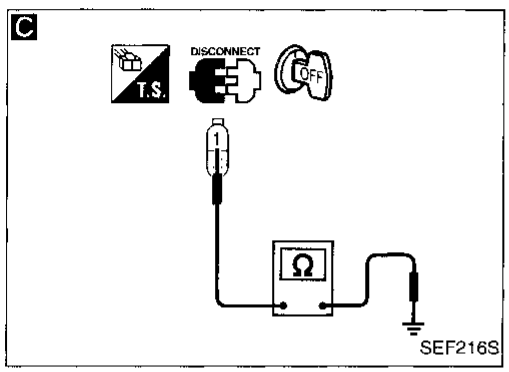

INSPECTION START

↓

A

CHECK HOSES BETWEEN SWIRL CONTROL VALVE CONTROL SOLENOID VALVE, SWIRL CONTROL VALVE CONTROL VACUUM CHECK SWITCH AND SWIRL CONTROL VALVE ACTUATOR.
1. Turn ignition switch "OFF".
2. Check hose for clogging, cracks or improper connection.

NG → Repair or reconnect the hose.

OK ↓

B

CHECK INPUT SIGNAL CIRCUIT.
1. Turn ignition switch "OFF".
2. Disconnect swirl control valve control vacuum check switch harness connector.
3. Check voltage between terminal ② and ground with CONSULT or tester.
Voltage: Approximately 5V

NG → Repair harness or connectors.

OK ↓

C

CHECK GROUND CIRCUIT.
1. Turn ignition switch "OFF".
2. Check harness continuity between terminal ① and engine ground.
Continuity should exist.
If OK, check harness for short.

NG → Repair harness or connectors.

OK ↓

CHECK COMPONENTS
(Swirl control valve control vacuum check switch).
Refer to "COMPONENT INSPECTION" on next page.

NG → Replace swirl control valve control vacuum check switch.

OK ↓

CHECK COMPONENT
(Swirl control valve control solenoid valve).
Refer to "COMPONENT INSPECTION" on next page.

NG → Replace swirl control valve control solenoid valve.

OK ↓

Disconnect and reconnect harness connectors in the circuit. Then retest.

↓ Trouble is not fixed.

Ⓐ

(Go to next page.)

Swirl Control Valve Control Vacuum Check Switch (Cont'd)

Ⓐ

Check ECM pin terminals for damage and check the connection of ECM harness connector. Reconnect ECM harness connector and retest.

INSPECTION END

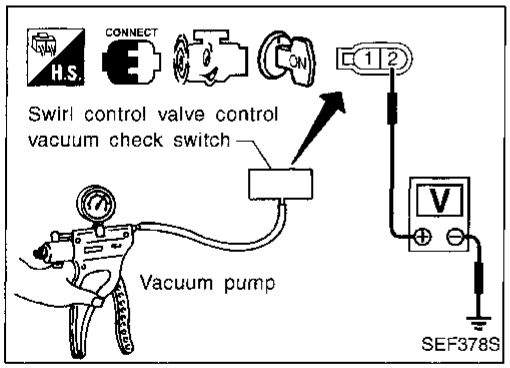

COMPONENT INSPECTION

Swirl control valve control vacuum check switch

1. Use vacuum pump to apply vacuum to swirl control valve control vacuum check switch as shown in figure.
2. Start engine.
3. Check voltage between terminal ② and engine ground with CONSULT or tester.

Pressure	Voltage (V)
More than −18.7 kPa (−140 mmHg, −5.51 inHg)	Engine ground
−18.7 to −22.7 kPa (−140 to −170 mmHg, −5.51 to −6.69 inHg)	Engine ground or Approx. 4.8
Less than −22.7 kPa (−170 mmHg, −6.69 inHg)	Approx. 4.8

4. If NG, replace swirl control valve control vacuum check switch.

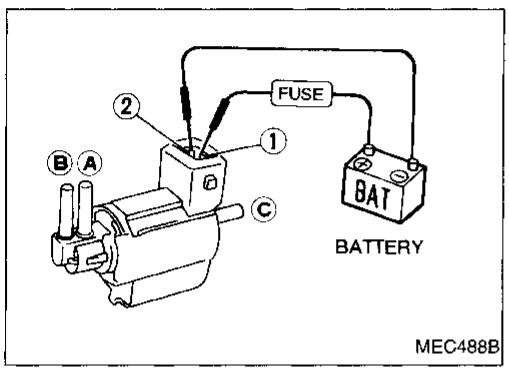

Swirl control valve control solenoid valve

Check solenoid valve air passage continuity.

Condition	Air passage continuity between Ⓐ and Ⓑ	Air passage continuity between Ⓐ and Ⓒ
12V direct current supply between terminals ① and ②	Yes	No
No supply	No	Yes

If NG, replace solenoid valve.

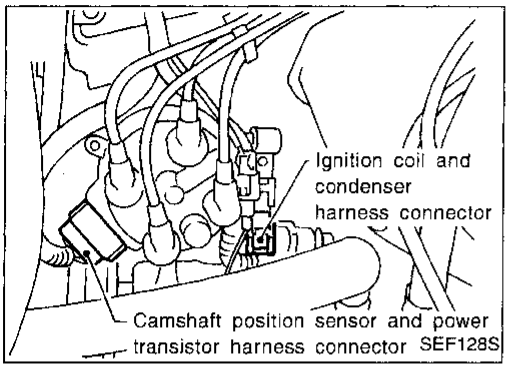

Ignition Signal

COMPONENT DESCRIPTION

Ignition coil & power transistor (Built into distributor)

The ignition signal from the ECM is sent to and amplified by the power transistor. The power transistor turns on and off the ignition coil primary circuit. This on-off operation induces the proper high voltage in the coil secondary circuit.

ECM TERMINALS AND REFERENCE VALUE

Specification data are reference values and are measured between each terminal and ㊸ (ECCS ground).

TERMINAL NO.	WIRE COLOR	ITEM	CONDITION	DATA (DC voltage)
1	W	Ignition signal	Engine is running. — Idle speed	0.3 - 0.6V*
			Engine is running. — Engine speed is 2,000 rpm	Approximately 0.8V*
2	W/G	Ignition check	Engine is running. — Idle speed	Approximately 12V*
3	W	Tachometer	Engine is running. — Idle speed	Approximately 0.9V*

*: Average voltage for pulse signal (Actual pulse signal can be confirmed by oscilloscope.)

ON BOARD DIAGNOSIS LOGIC

Diagnostic Trouble Code No.	Malfunction is detected when ...	Check Items (Possible Cause)
P1320 0201	● The ignition signal in the primary circuit is not sent during engine cranking or running.	● Harness or connectors (The ignition primary circuit is open or shorted.) ● Power transistor ● Resistor ● Camshaft position sensor ● Camshaft position sensor circuit

Ignition Signal (Cont'd)

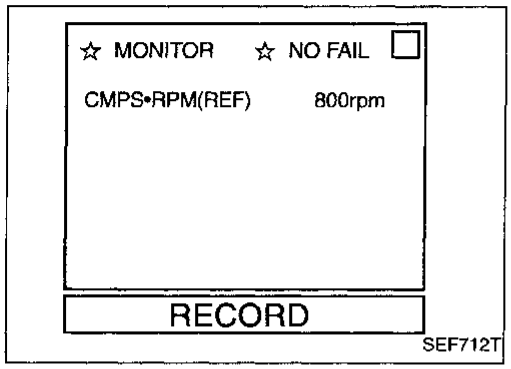

DIAGNOSTIC TROUBLE CODE CONFIRMATION PROCEDURE

Note: If both DTC P0340 (0101) and P1320 (0201) are displayed, perform TROUBLE DIAGNOSIS FOR DTC P0340 first. (See EC-171.)

1) Turn ignition switch "ON".
2) Select "DATA MONITOR" mode with CONSULT.
3) Start engine. (If engine does not run, turn ignition switch to "START" for at least 5 seconds.)

OR

1) Turn ignition switch "ON".
2) Start engine. (If engine does not run, turn ignition switch to "START" for at least 5 seconds.)
3) Select MODE 7 with GST.

OR

1) Turn ignition switch "ON".
2) Start engine. (If engine does not run, turn ignition switch to "START" for at least 5 seconds.)
3) Turn ignition switch "OFF", wait at least 7 seconds and then turn "ON".
4) Perform "Diagnostic Test Mode II (Self-diagnostic results)" with ECM.

Ignition Signal (Cont'd)

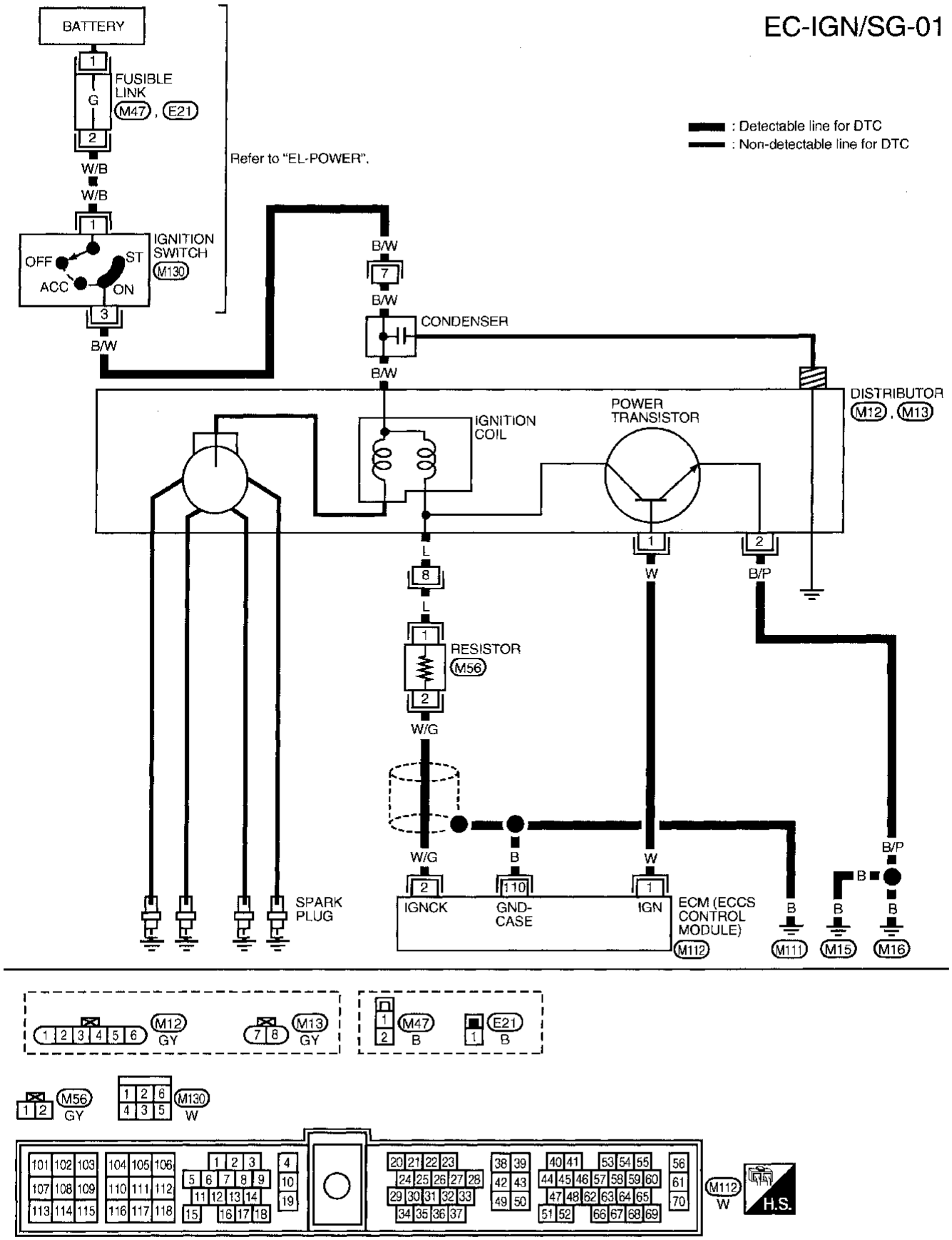

AEC316A

Ignition Signal (Cont'd)

DIAGNOSTIC PROCEDURE

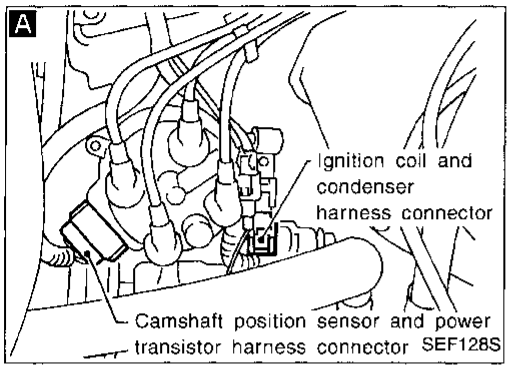

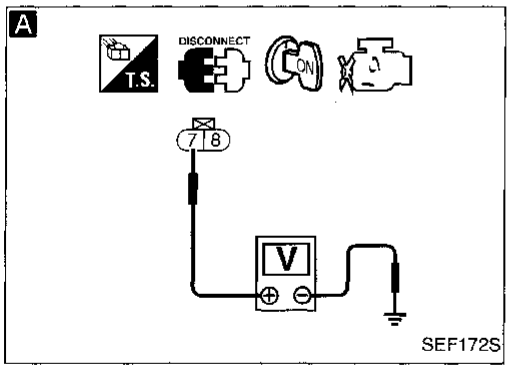

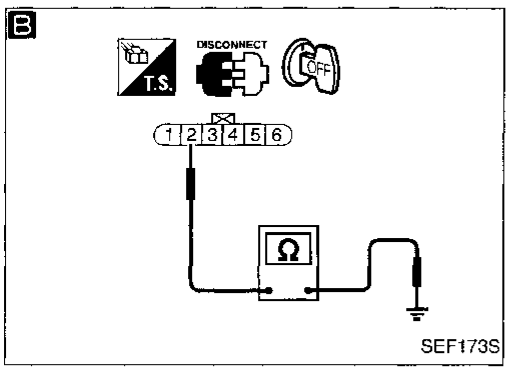

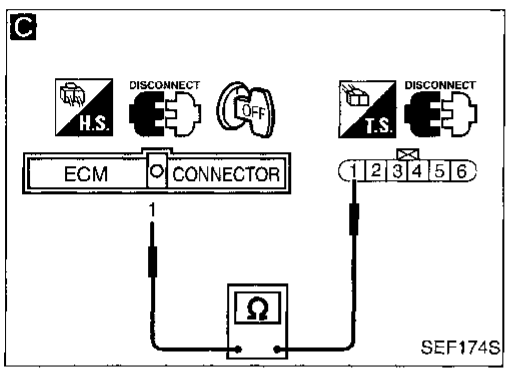

INSPECTION START

↓

Turn ignition switch "OFF", and restart engine.
Is engine running?

Yes → Ⓐ (Go to next page.)

No ↓

A

CHECK POWER SUPPLY.
1. Turn ignition switch "OFF".
2. Disconnect ignition coil harness connector.
3. Turn ignition switch "ON".
4. Check voltage between terminal ⑦ and ground with CONSULT or tester.
Voltage: Battery voltage

NG → Repair harness or connectors.

OK ↓

B

CHECK GROUND CIRCUIT.
1. Turn ignition switch "OFF".
2. Disconnect power transistor harness connector.
3. Check harness continuity between terminal ② and engine ground.
Continuity should exist.
If OK, check harness for short.

NG → Repair harness or connectors.

OK ↓

C

CHECK INPUT SIGNAL CIRCUIT.
1. Disconnect ECM harness connector.
2. Check harness continuity between ECM terminal ① and terminal ①.
Continuity should exist.
If OK, check harness for short.

NG → Repair harness or connectors.

OK ↓

CHECK COMPONENTS
(Ignition coil, power transistor).
Refer to "COMPONENT INSPECTION", EC-261.

NG → Replace malfunctioning component(s).

OK ↓

Disconnect and reconnect harness connectors in the circuit. Then retest.

Trouble is not fixed. ↓

Check ECM pin terminals for damage and check the connection of ECM harness connector. Reconnect ECM harness connector and retest.

↓

INSPECTION END

Ignition Signal (Cont'd)

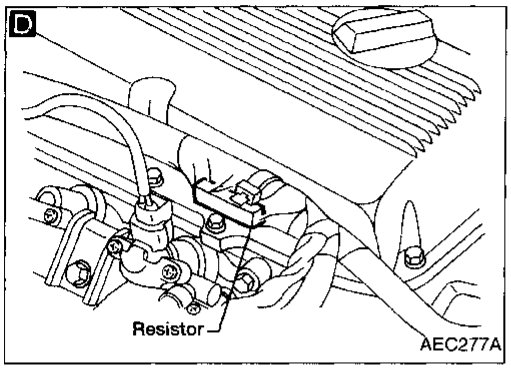

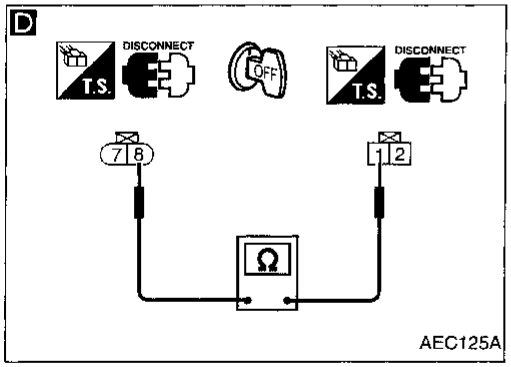

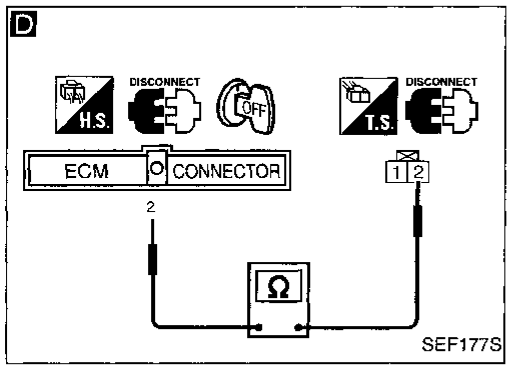

Ⓐ

D

CHECK INPUT SIGNAL CIRCUIT.

1. Stop engine.
2. Disconnect ignition coil harness connector.
3. Strip tape covering resistor.
4. Disconnect resistor harness connector.
5. Disconnect ECM harness connector.
6. Check harness continuity between terminal ⑧ and terminal ①, terminal ② and ECM terminal ②.
   Continuity should exist.
   If OK, check harness for short.

NG → Repair harness or connectors.

OK ↓

CHECK COMPONENTS (Resistor).
Refer to "COMPONENT INSPECTION" on next page.

NG → Replace resistor.

OK ↓

Disconnect and reconnect harness connectors in the circuit. Then retest.

Trouble is not fixed. ↓

Check ECM pin terminals for damage and check the connection of ECM harness connector. Reconnect ECM harness connector and retest.

↓

INSPECTION END

Ignition Signal (Cont'd)

COMPONENT INSPECTION

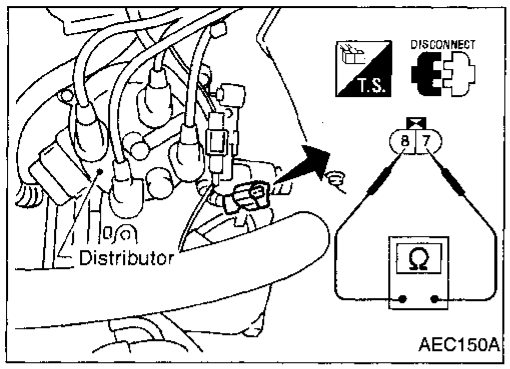

Ignition coil

1. Disconnect ignition coil harness connector.
2. Remove distributor cap.
3. Check resistance as shown in the figure.

Terminal	Resistance [at 25°C (77°F)]
⑦ - ⑧	Less than 1Ω
⑦ - ⑨	7 - 13 kΩ

If NG, replace distributor assembly.

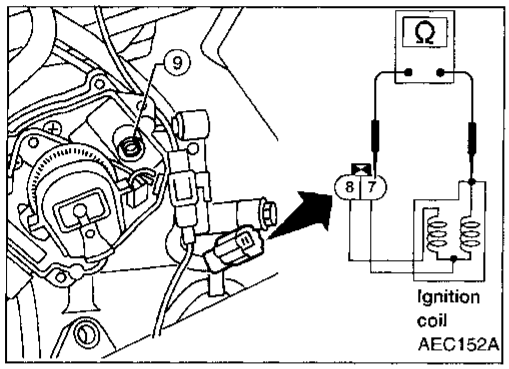

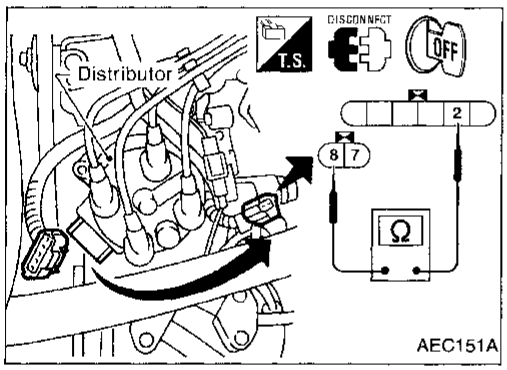

Power transistor

1. Disconnect camshaft position sensor & power transistor harness connector and ignition coil harness connector.
2. Check power transistor resistance between terminals ② and ⑧.

Terminals	Resistance	Result
② and ⑧	Except 0Ω	OK
	0Ω	NG

If NG, replace distributor assembly.

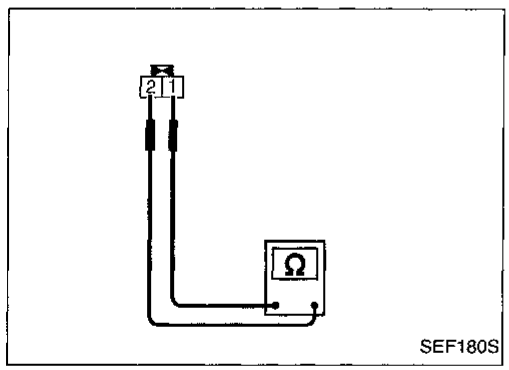

Resistor

1. Disconnect resistor harness connector.
2. Check resistance between terminals ① and ②.
   Resistance: Approximately 2.2 kΩ

If NG, replace resistor.

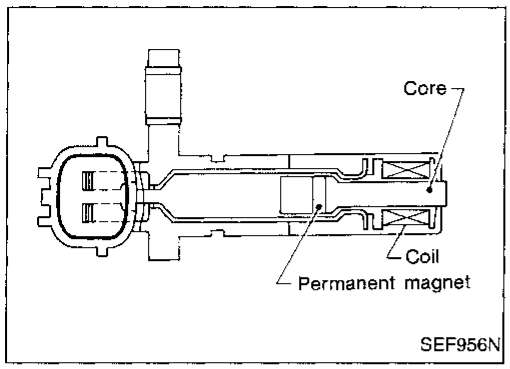

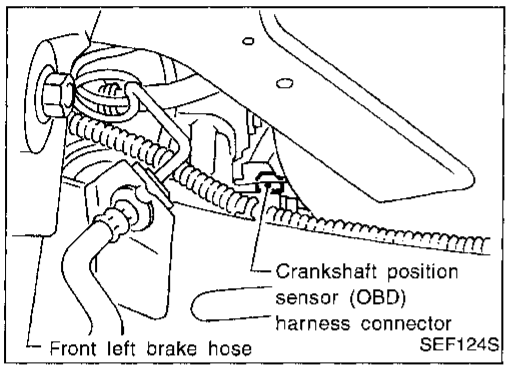

Crankshaft Position Sensor (CKPS) (OBD) (COG)

COMPONENT DESCRIPTION

The crankshaft position sensor (OBD) is located on the transmission housing facing the gear teeth (cogs) of the flywheel or drive plate. It detects the fluctuation of the engine revolution.
The sensor consists of a permanent magnet, core and coil.
When the engine is running, the high and low parts of the teeth cause the gap with the sensor to change.
The changing gap causes the magnetic field near the sensor to change.
Due to the changing magnetic field, the voltage from the sensor changes.
The ECM receives the voltage signal and detects the fluctuation of the engine revolution.
This sensor is not used to control the engine system.
It is used only for the on board diagnosis of misfire.

ECM TERMINALS AND REFERENCE VALUE

Specification data are reference values and are measured between each terminal and ㊸ (ECCS ground).

TERMINAL NO.	WIRE COLOR	ITEM	CONDITION	DATA (DC voltage)
50	B/G	Sensors' ground	Engine is running. (Warm-up condition) └ Idle speed	0.001 - 0.02V
53	R	Crankshaft position sensor (OBD)	Engine is running. (A/T: N range, M/T: Neutral) └ Idle speed (Air conditioner switch "OFF".)	More than 0.2V* (AC range)

*: Average voltage for pulse signal (Actual pulse signal can be confirmed by oscilloscope.)

ON BOARD DIAGNOSIS LOGIC

Diagnostic Trouble Code No.	Malfunction is detected when	Check Items (Possible Cause)
P1336 0905	● A chipping of the flywheel or drive plate gear tooth (cog) is detected by the ECM.	● Harness or connectors ● Crankshaft position sensor (OBD) ● Flywheel (Drive plate)

Crankshaft Position Sensor (CKPS) (OBD) (COG) (Cont'd)

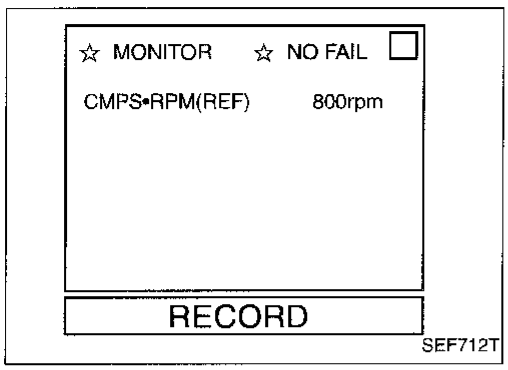

DIAGNOSTIC TROUBLE CODE CONFIRMATION PROCEDURE

1) Turn ignition switch "ON" and select "DATA MONITOR" mode with CONSULT.
2) Start engine and run it for at least 2 minutes at idle speed.

OR

1) Start engine and run it for at least 2 minutes at idle speed.
2) Select "MODE 7" with GST.

OR

1) Start engine and run it for at least 2 minutes at idle speed.
2) Turn ignition switch "OFF", wait at least 7 seconds and then turn "ON".
3) Perform "Diagnostic Test Mode II (Self-diagnostic results)" with ECM.

Crankshaft Position Sensor (CKPS) (OBD) (COG) (Cont'd)

EC-CKPS-01

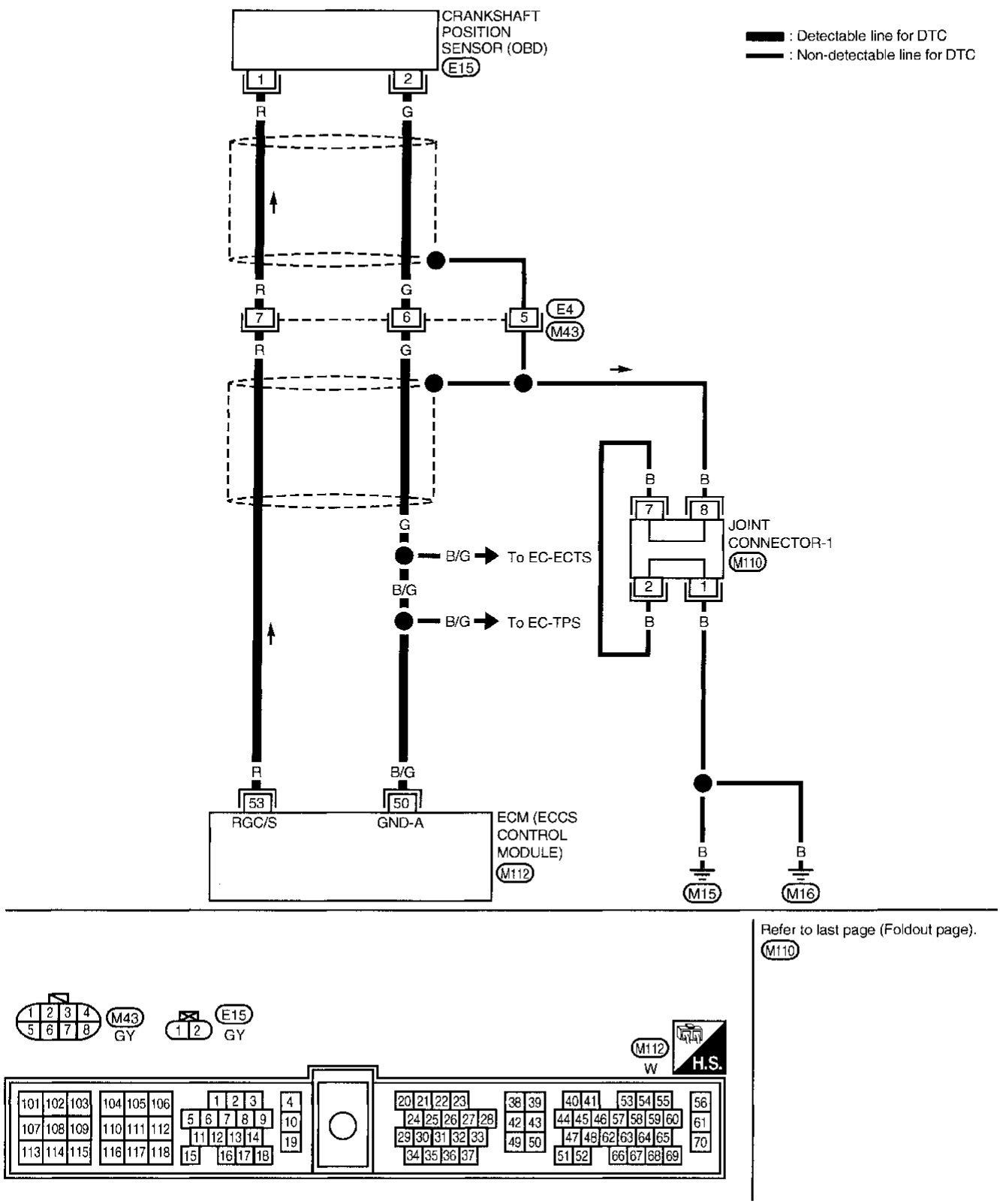

AEC063A

Crankshaft Position Sensor (CKPS) (OBD) (COG) (Cont'd)

DIAGNOSTIC PROCEDURE

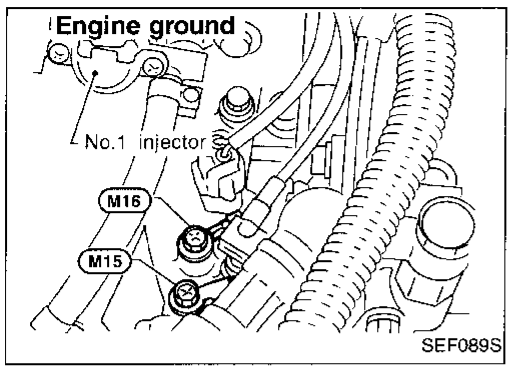

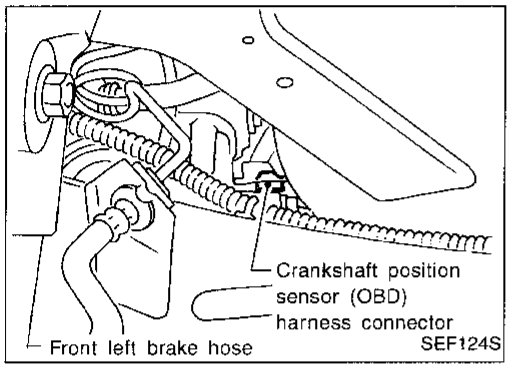

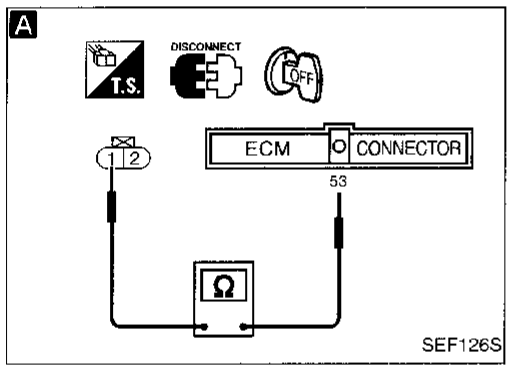

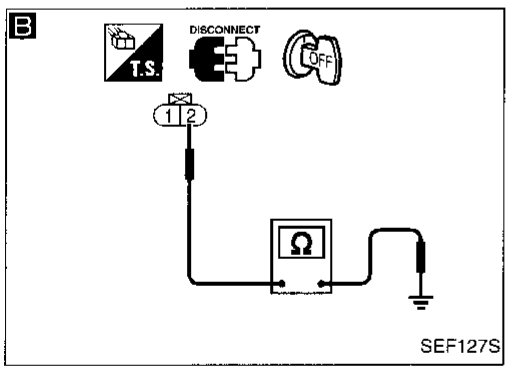

INSPECTION START

↓

CHECK SHIELD CIRCUIT.
1. Turn ignition switch "OFF".
2. Loosen and retighten engine ground screws.
3. Remove joint connector-1.
4. Check the following.
   - Continuity between joint connector-1 terminal and ground
   - Joint connector-1 (Refer to "HARNESS LAYOUT" in EL section.)

Continuity should exist.
If OK, check harness for short. Then reconnect joint connector-1.

NG → Repair harness or connectors.

OK ↓

A

CHECK INPUT SIGNAL CIRCUIT.
1. Disconnect crankshaft position sensor (OBD) harness connector and ECM harness connector.
2. Check continuity between ECM terminal (53) and terminal (1).

Continuity should exist.
If OK, check harness for short.

NG → Check the following.
- Harness connectors (M43), (E4)
- Harness for open or short between crankshaft position sensor (OBD) and ECM

If NG, repair harness or connectors.

OK ↓

B

CHECK GROUND CIRCUIT.
1. Turn ignition switch "OFF".
2. Reconnect ECM harness connector.
3. Check harness continuity between terminal (2) and engine ground.

Continuity should exist.
If OK, check harness for short.

NG → Check the following.
- Harness connectors (M43), (E4)
- Harness for open or short between crankshaft position sensor (OBD) and ECM

If NG, repair harness or connectors.

OK ↓

Loosen and retighten the fixing bolt of the crankshaft position sensor (OBD). Then retest.

↓ Trouble is not fixed.

(A)
(Go to next page.)

Crankshaft Position Sensor (CKPS) (OBD) (COG) (Cont'd)

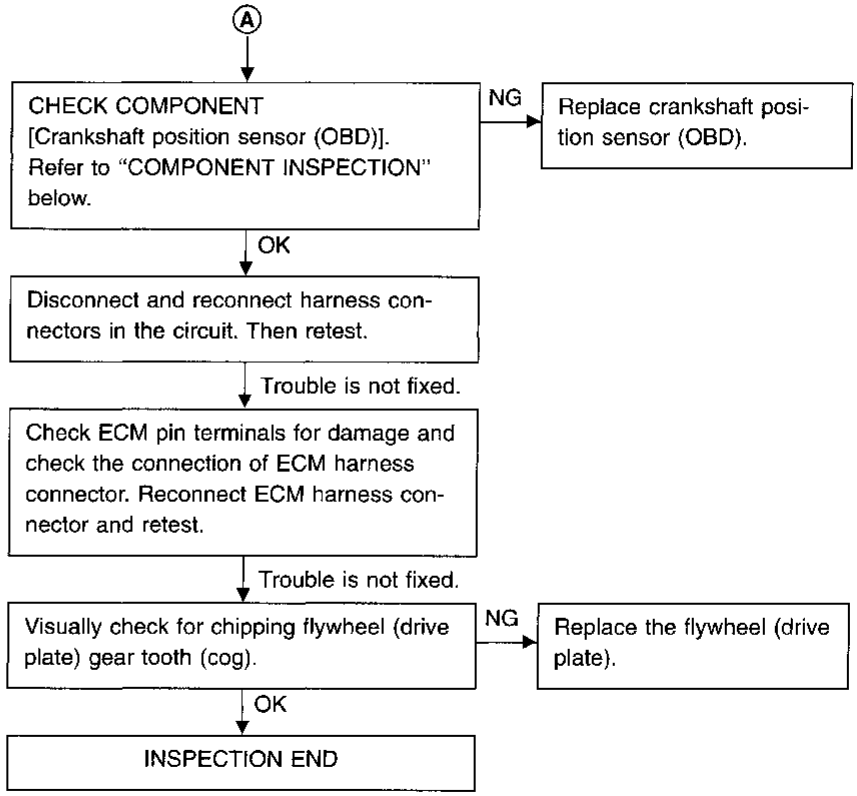

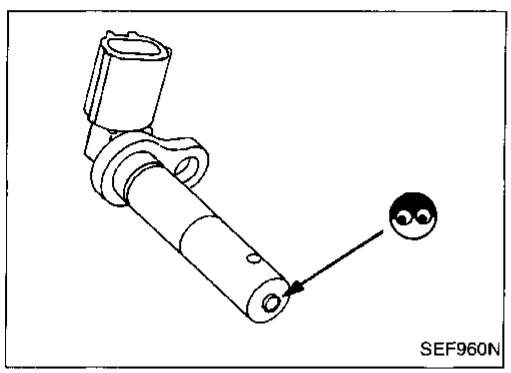

COMPONENT INSPECTION

Crankshaft position sensor (OBD)

1. Disconnect crankshaft position sensor (OBD) harness connector.
2. Loosen the fixing bolt of the sensor.
3. Remove the sensor.
4. Visually check the sensor for chipping.

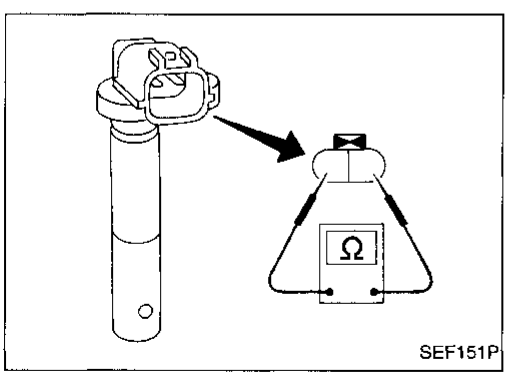

5. Check resistance as shown in the figure.
   Resistance: Approximately 166.5 - 203.5Ω at 20°C (68°F)

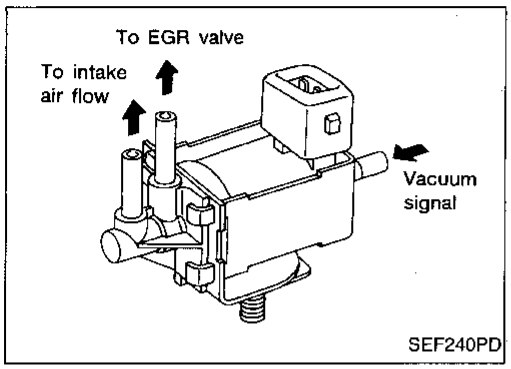

EGRC-Solenoid Valve

COMPONENT DESCRIPTION

The EGRC-solenoid valve responds to signals from the ECM. When the ECM sends an ON (ground) signal, the coil in the solenoid valve is energized. A plunger will then move to cut the vacuum signal (from the throttle body to the EGR valve).
When the ECM sends an OFF signal, the vacuum signal passes through the solenoid valve. The signal then reaches the EGR valve.

ECM TERMINALS AND REFERENCE VALUE

Specification data are reference values and are measured between each terminal and ㊸ (ECCS ground).

TERMINAL NO.	WIRE COLOR	ITEM	CONDITION	DATA (DC voltage)
103	W/L	EGRC-solenoid valve	Engine is running. (Warm-up condition) └ Engine speed is 2,000 rpm.	BATTERY VOLTAGE (11 - 14V)
			Engine is running. (Warm-up condition) └ Idle speed	0 - 1V

CONSULT REFERENCE VALUE IN DATA MONITOR MODE

Specification data are reference values.

MONITOR ITEM	CONDITION		SPECIFICATION
EGRC SOL/V	● Engine: After warming up ● Air conditioner switch: OFF ● Shift lever: "N" ● No-load	Idle	ON
		Racing up to 1,500 - 2,000 rpm	OFF

ON BOARD DIAGNOSIS LOGIC

Diagnostic Trouble Code No.	Malfunction is detected when	Check Items (Possible Cause)
P1400 1005	● An improper voltage signal is sent to ECM through EGRC-solenoid valve.	● Harness or connectors (The EGRC-solenoid valve circuit is open or shorted.) ● EGRC-solenoid valve

EGRC-Solenoid Valve (Cont'd)

OVERALL FUNCTION CHECK

Use this procedure to check the overall function of the EGRC-solenoid valve circuit. During this check, a 1st trip DTC might not be confirmed.

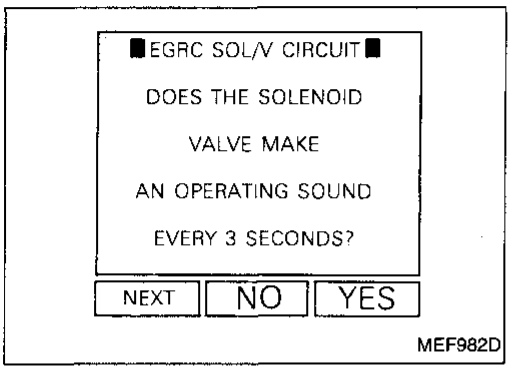

1) Turn ignition switch "ON".
2) Perform "EGRC SOL/V CIRCUIT" in "FUNCTION TEST" mode with CONSULT.

— OR —

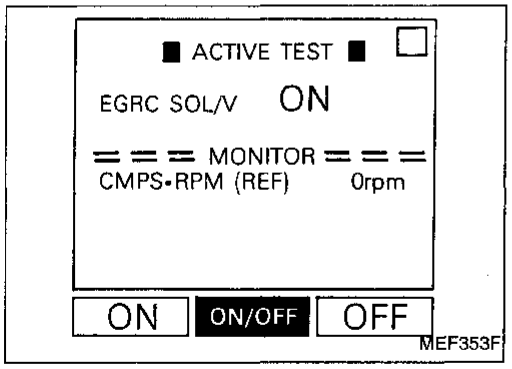

1) Turn ignition switch "ON".
2) Perform "EGRC SOLENOID VALVE" in "ACTIVE TEST" mode with CONSULT and check the operating sound, according to ON/OFF switching.

— OR —

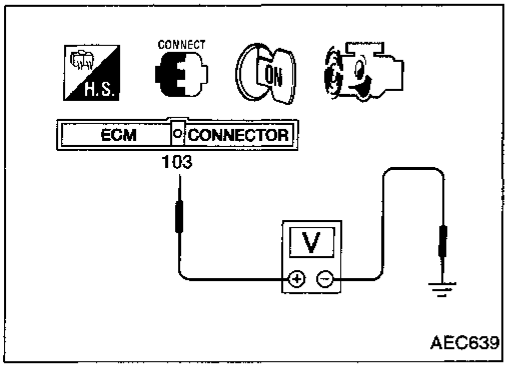

1) Start engine and warm it up sufficiently.
2) Turn ignition switch "OFF" and wait at least 7 seconds.
3) Start engine again.
4) Check the voltage between ECM terminal (103) and ground at idle speed.
   Voltage: 0.04 - 0.08V
5) Check that the voltage changes to battery voltage and returns to 0.04 - 0.08V when the engine speed increases to about 2,500 rpm.

EC-EGRC/V-01

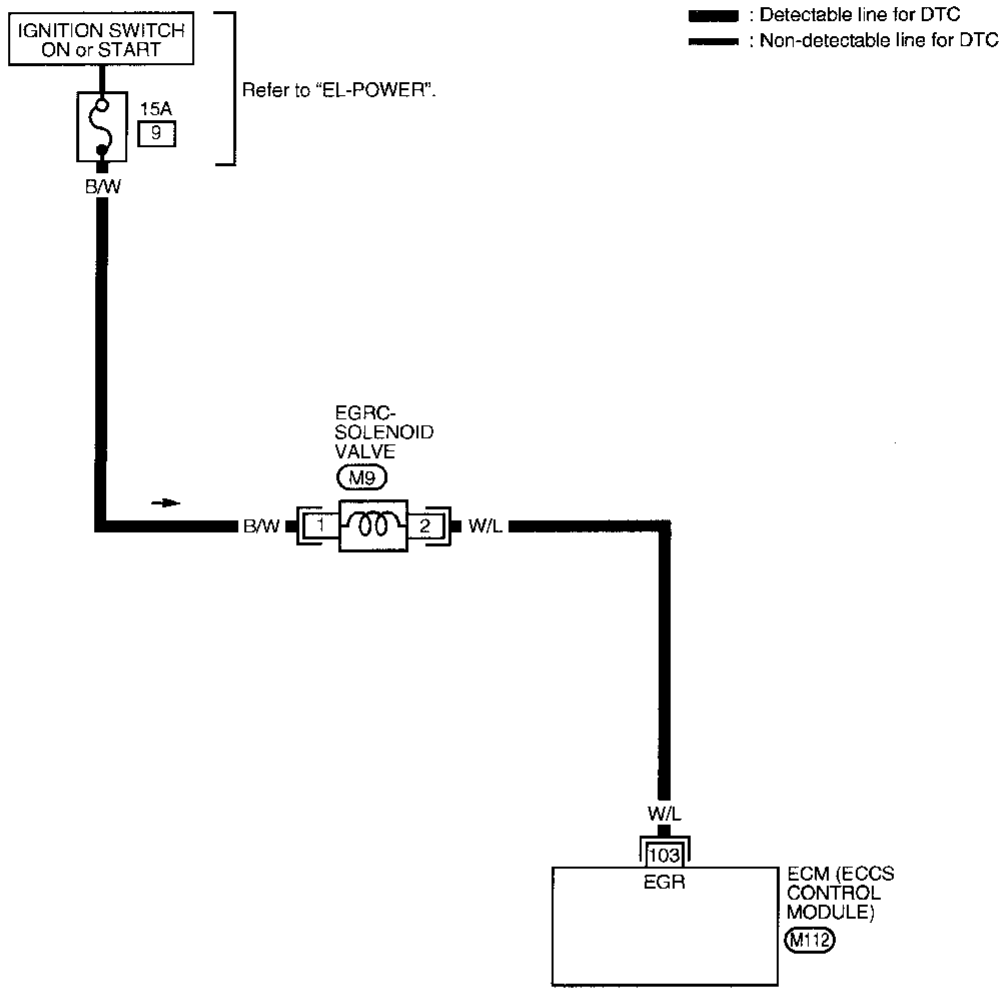

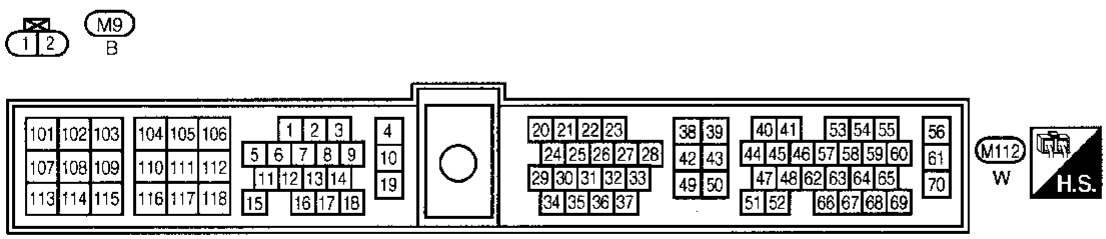

AEC317A

EGRC-Solenoid Valve (Cont'd)

DIAGNOSTIC PROCEDURE

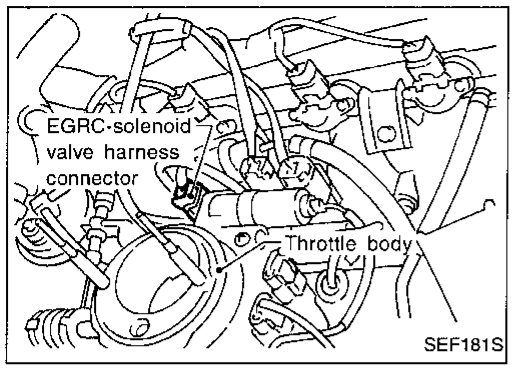

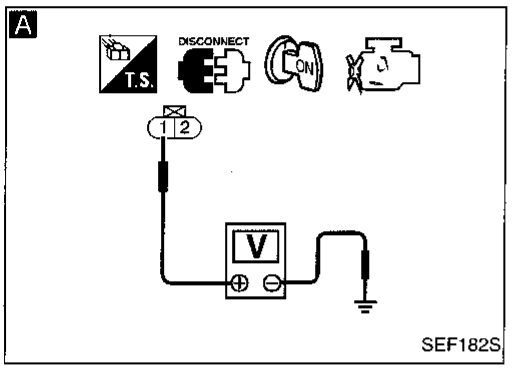

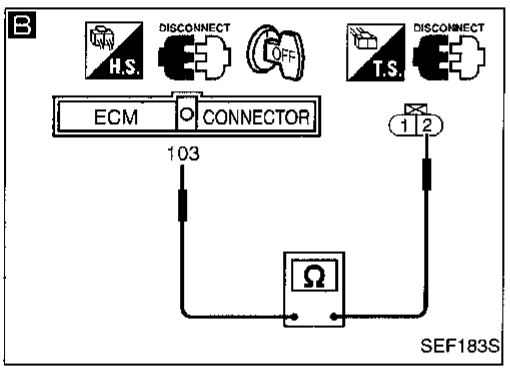

INSPECTION START

↓

A

CHECK POWER SUPPLY.
1. Turn ignition switch "OFF".
2. Disconnect EGRC-solenoid valve harness connector.
3. Turn ignition switch "ON".
4. Check voltage between terminal ① and ground with CONSULT or tester.
   Voltage: Battery voltage

NG → Check the following.
- 15A fuse
- Harness for open or short between EGRC-solenoid valve and fuse

If NG, repair harness or connectors.

OK ↓

B

CHECK OUTPUT SIGNAL CIRCUIT.
1. Turn ignition switch "OFF".
2. Disconnect ECM harness connector.
3. Check harness continuity between ECM terminal (103) and terminal ②.
   Continuity should exist.
   If OK, check harness for short.

NG → Repair harness or connectors.

OK ↓

CHECK COMPONENT (EGRC-solenoid valve).
Refer to "COMPONENT INSPECTION" below.

NG → Replace EGRC-solenoid valve.

OK ↓

Disconnect and reconnect harness connectors in the circuit. Then retest.

Trouble is not fixed. ↓

Check ECM pin terminals for damage and check the connection of ECM harness connector. Reconnect ECM harness connector and retest.

↓

INSPECTION END

COMPONENT INSPECTION

EGRC-solenoid valve

Check air passage continuity.

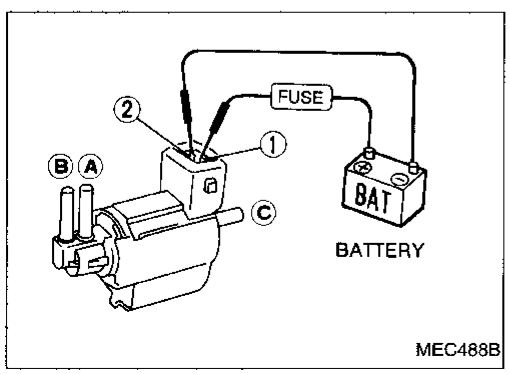

Condition	Air passage continuity between Ⓐ and Ⓑ	Air passage continuity between Ⓐ and Ⓒ
12V direct current supply between terminals ① and ②	Yes	No
No supply	No	Yes

If NG, replace solenoid valve.

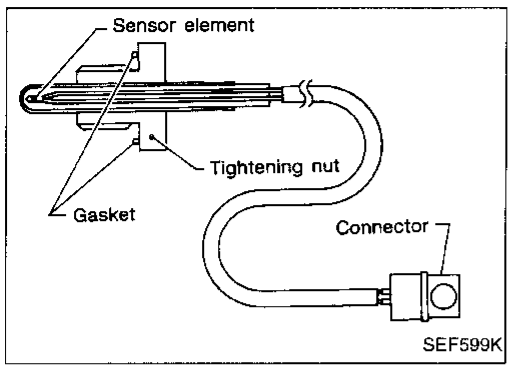

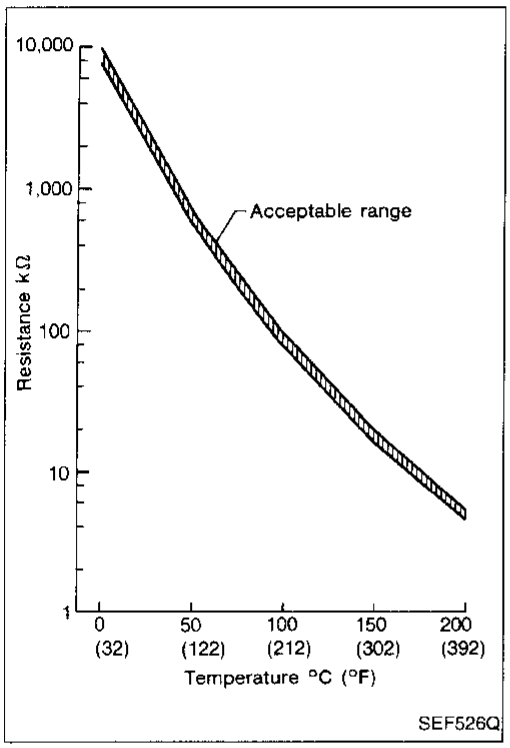

EGR Temperature Sensor

COMPONENT DESCRIPTION

The EGR temperature sensor detects temperature changes in the EGR passage way. When the EGR valve opens, hot exhaust gases flow, and the temperature in the passageway changes. The EGR temperature sensor is a thermistor that modifies a voltage signal sent from the ECM. This modified signal then returns to the ECM as an input signal. As the temperature increases, EGR temperature sensor resistance decreases.

This sensor is not used to control the engine system. It is used only for the on board diagnosis.

〈Reference data〉

EGR temperature °C (°F)	Voltage* (V)	Resistance (MΩ)
0 (32)	4.81	7.9 - 9.7
50 (122)	2.82	0.57 - 0.70
100 (212)	0.8	0.08 - 0.10

*: These data are reference values and measured between ECM terminal 62 (EGR temperature sensor) and ECM terminal 43 (ECCS ground).

ON BOARD DIAGNOSIS LOGIC

Diagnostic Trouble Code No.	Malfunction is detected when	Check Items (Possible Cause)
P1401 0305	A) An excessively low voltage from the EGR temperature sensor is sent to ECM, even when engine coolant temperature is low.	● Harness or connectors (The EGR temperature sensor circuit is shorted.) ● EGR temperature sensor ● Malfunction of EGR function, EGRC-BPT valve or EGRC-solenoid valve
	B) An excessively high voltage from the EGR temperature sensor is sent to ECM, even when engine coolant temperature is high.	● Harness or connectors (The EGR temperature sensor circuit is open.) ● EGR temperature sensor ● Malfunction of EGR function, EGRC-BPT valve or EGRC-solenoid valve

EGR Temperature Sensor (Cont'd)

OVERALL FUNCTION CHECK

Use this procedure to check the overall function of the EGR temperature sensor circuit. During this check, a 1st trip DTC might not be confirmed.

Procedure for malfunctions A and B

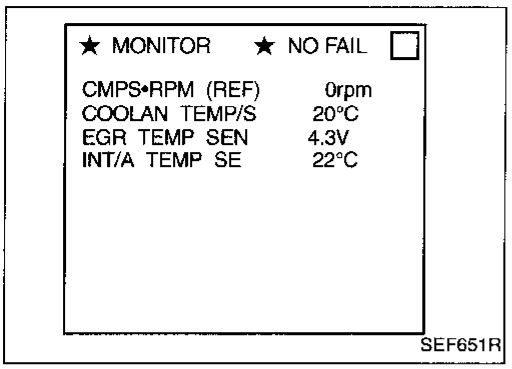

1) Turn ignition switch "ON" and select "DATA MONITOR" mode with CONSULT.
2) Confirm that engine coolant temperature and intake air temperature are lower than 40°C (104°F). (If necessary, wait until the temperatures equal atmospheric temperature.)
3) Confirm that "EGR TEMP SEN" reading is between 3.45V and 5.0V.
4) Start engine and warm it up sufficiently.
5) Run engine at idle for at least 2 minutes.
6) Confirm that EGR valve is not lifting. If NG, go to TROUBLE DIAGNOSES FOR DTC P0400 and P0402. (See pages EC-176 and 184.)
7) Read "EGR TEMP SEN" at about 1,500 rpm with EGR valve lifted up to the full position by hand.
   Voltage should decrease to less than 1.0V.
8) If step 7 is OK, perform TROUBLE DIAGNOSES FOR DTC P0400, P0402 and P1400. (See pages EC-176, 184 and 267.)

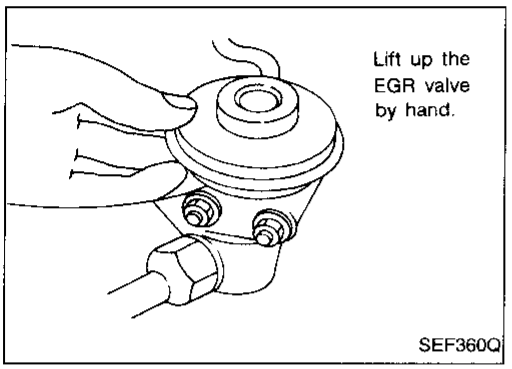

OR

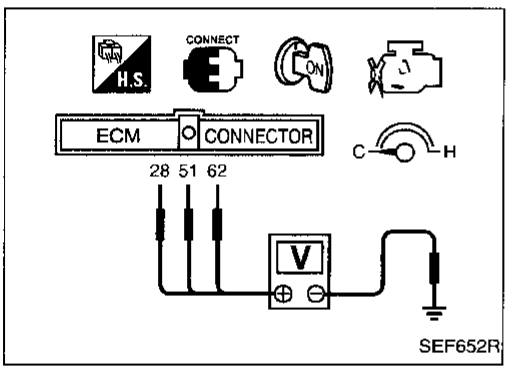

1) Turn ignition switch "ON".
2) Confirm that voltage between ECM terminals (51), (28) and ground are more than 2.72V. (If necessary, wait until engine coolant temperature and intake air temperature equal atmospheric temperature.)
3) Confirm that voltage between ECM terminal (62) and ground is between 3.45V and 5.0V.
4) Start engine and warm it up sufficiently.
5) Run engine at idle for at least 2 minutes.
6) Confirm that EGR valve is not lifting. If NG, go to TROUBLE DIAGNOSES FOR DTC P0400 and P0402. (See pages EC-176 and 184.)
7) Check voltage between ECM terminal (62) and ground at about 1,500 rpm with EGR valve lifted up to the full position by hand.
   Voltage should decrease to less than 1.0V.
8) If step 7 is OK, perform TROUBLE DIAGNOSES FOR DTC P0400, P0402 and P1400. (See pages EC-176, 184 and 267.)

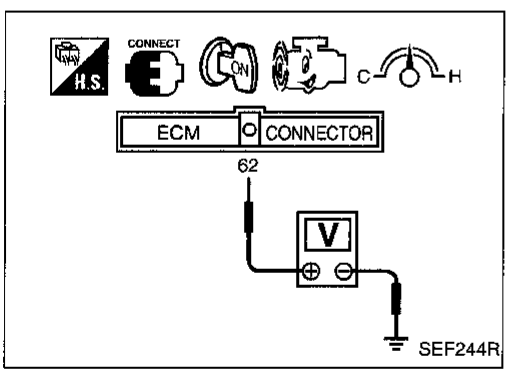

EC-EGR/TS-01

: Detectable line for DTC
: Non-detectable line for DTC

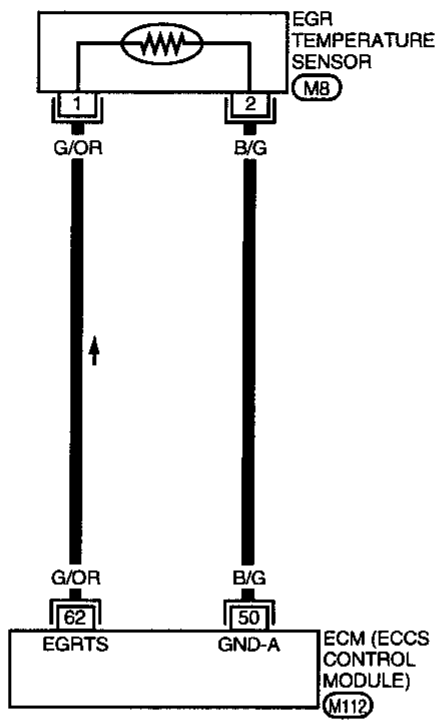

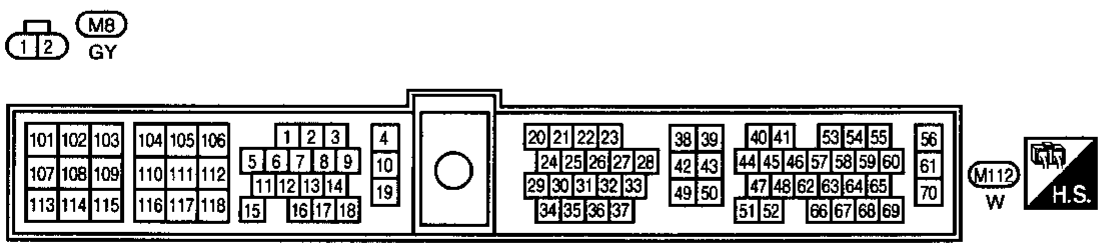

AEC065A

EGR Temperature Sensor (Cont'd)

DIAGNOSTIC PROCEDURE

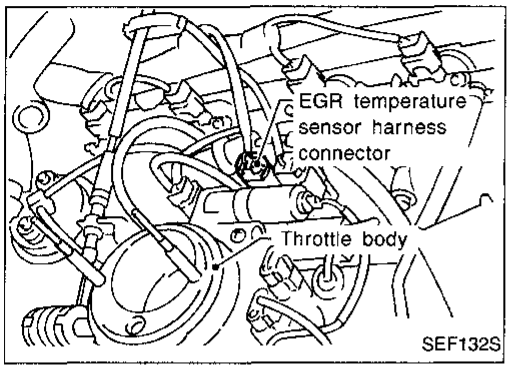

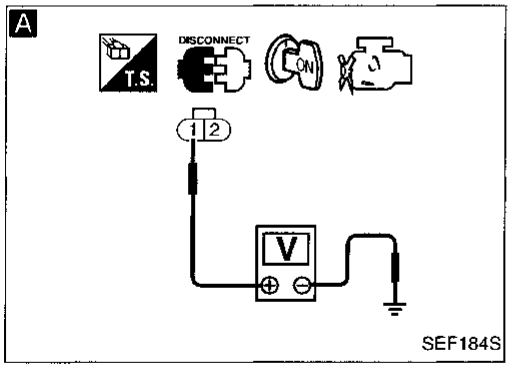

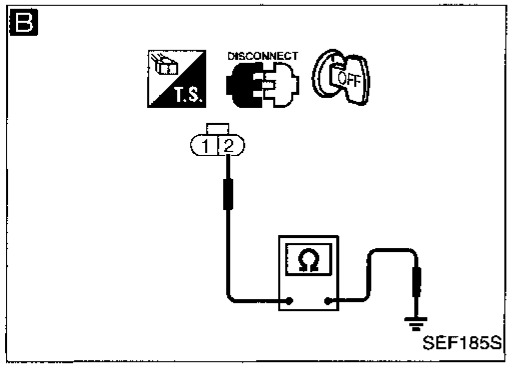

INSPECTION START

↓

A

CHECK POWER SUPPLY.
1) Disconnect EGR temperature sensor harness connector.
2) Turn ignition switch "ON".
3) Check voltage between terminal ① and ground with CONSULT or tester.
Voltage: Approximately 5V

NG → Repair harness or connectors.

↓ OK

B

CHECK GROUND CIRCUIT.
1) Turn ignition switch "OFF".
2) Check harness continuity between terminal ② and engine ground.
Continuity should exist.
If OK, check harness for short.

NG → Check the following.
- Harness continuity between ECM and EGR temperature sensor

If NG, repair harness or connector.

↓ OK

CHECK COMPONENT
(EGR temperature sensor).
Refer to "COMPONENT INSPECTION" on next page.

NG → Replace EGR temperature sensor.

↓ OK

Disconnect and reconnect harness connectors in the circuit. Then retest.

↓ Trouble is not fixed.

Check ECM pin terminals for damage and check the connection of ECM harness connector. Reconnect ECM harness connector and retest.

↓

INSPECTION END

EGR Temperature Sensor (Cont'd)

COMPONENT INSPECTION

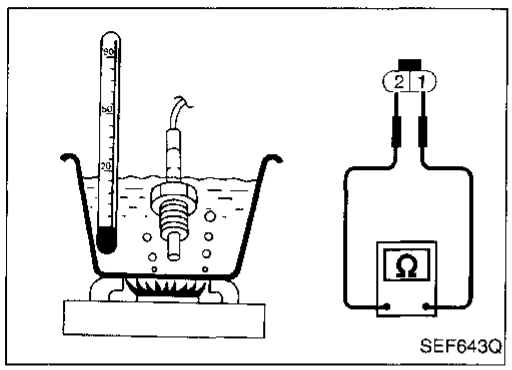

EGR temperature sensor

Check resistance change and resistance value.

⟨Reference data⟩

EGR temperature °C (°F)	Voltage (V)	Resistance (MΩ)
0 (32)	4.81	7.9 - 9.7
50 (122)	2.82	0.57 - 0.70
100 (212)	0.8	0.08 - 0.10

If NG, replace EGR temperature sensor.

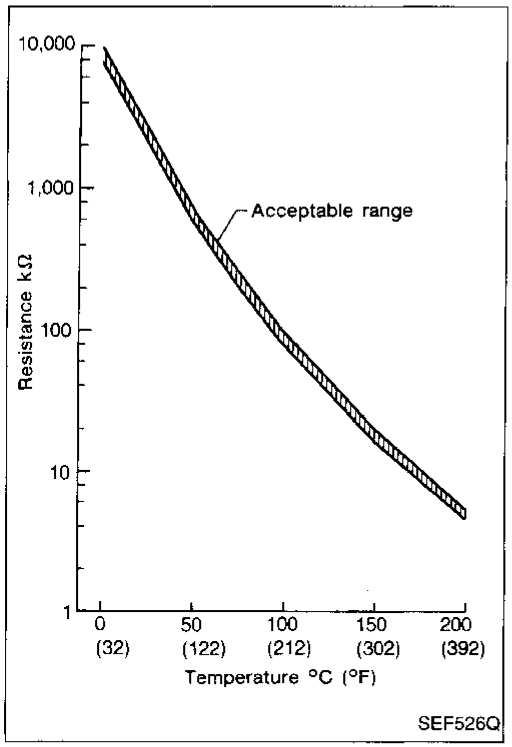

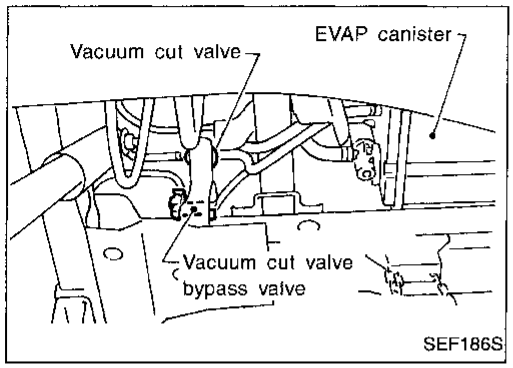

Vacuum Cut Valve Bypass Valve

COMPONENT DESCRIPTION

The vacuum cut valve and vacuum cut valve bypass valve are installed in parallel on the EVAP purge line between the fuel tank and the EVAP canister.
The vacuum cut valve prevents the intake manifold vacuum from being applied to the fuel tank.
The vacuum cut valve bypass valve is a solenoid type valve and generally remains closed. It opens only for on board diagnosis.
The vacuum cut valve bypass valve responds to signals from the ECM. When the ECM sends an ON (ground) signal, the valve is opened. The vacuum cut valve is then bypassed to apply intake manifold vacuum to the fuel tank.

ECM TERMINALS AND REFERENCE VALUE

Specification data are reference values and are measured between each terminal and ㊸ (ECCS ground).

TERMINAL NO.	WIRE COLOR	ITEM	CONDITION	DATA (DC voltage)
117	Y	Vacuum cut valve bypass valve	Ignition switch "ON"	BATTERY VOLTAGE (11 - 14V)

CONSULT REFERENCE VALUE IN DATA MONITOR MODE

Specification data are reference values.

MONITOR ITEM	CONDITION	SPECIFICATION
VC/V BYPASS/V	● Ignition switch: ON	OFF

EVAPORATIVE EMISSION SYSTEM DIAGRAM

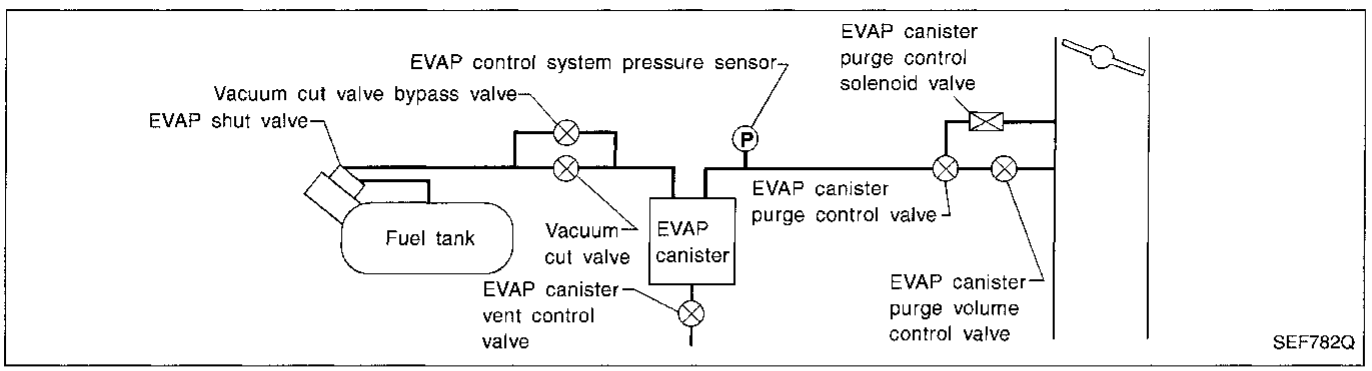

ON BOARD DIAGNOSIS LOGIC

Diagnostic Trouble Code No.	Malfunction is detected when	Check Items (Possible Cause)
P1441 0801	A) An improper voltage signal is sent to ECM through vacuum cut valve bypass valve.	● Harness or connectors (The vacuum cut valve bypass valve circuit is open or shorted.) ● Vacuum cut valve bypass valve
	B) Vacuum cut valve bypass valve does not operate properly.	● Vacuum cut valve bypass valve ● Vacuum cut valve ● Bypass hoses for clogging ● EVAP shut valve ● EVAP control system pressure sensor

Vacuum Cut Valve Bypass Valve (Cont'd)

DIAGNOSTIC TROUBLE CODE CONFIRMATION PROCEDURE

Perform "Procedure for malfunction A" first. If 1st trip DTC cannot be confirmed, perform "OVERALL FUNCTION CHECK", "Procedure for malfunction B".

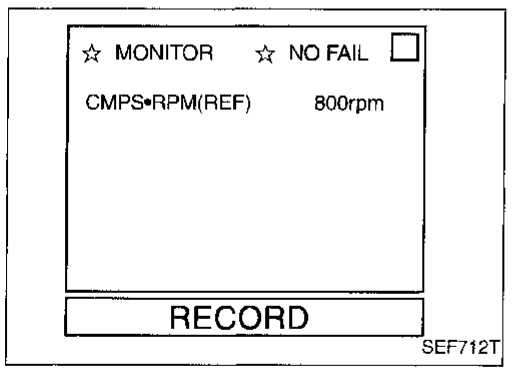

Procedure for malfunction A

1) Turn ignition switch "ON".
2) Select "DATA MONITOR" mode with CONSULT.
3) Start engine and wait at least 5 seconds.

— OR —

1) Start engine and wait at least 5 seconds.
2) Select "MODE 7" with GST.

— OR —

1) Start engine and wait at least 5 seconds.
2) Turn ignition switch "OFF", wait at least 7 seconds and then turn "ON".
3) Perform "Diagnostic Test Mode II (Self-diagnostic results)" with ECM.

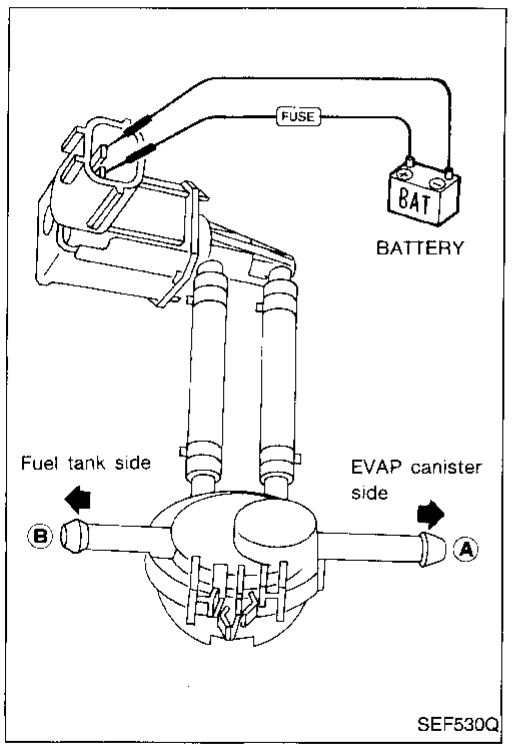

OVERALL FUNCTION CHECK

Procedure for malfunction B

1) Remove vacuum cut valve and vacuum cut valve bypass valve as an assembly.
2) Apply vacuum to port Ⓐ and check that there is no suction from port Ⓑ.
3) Apply vacuum to port Ⓑ and check that there is suction from port Ⓐ.
4) Blow air in port Ⓑ and check that there is a resistance to flow out of port Ⓐ.
5) Supply battery voltage to the terminal.
6) Blow air in port Ⓐ and check that air flows freely out of port Ⓑ.
7) Blow air in port Ⓑ and check that air flows freely out of port Ⓐ.

Vacuum Cut Valve Bypass Valve (Cont'd)

EC-BYPS/V-01

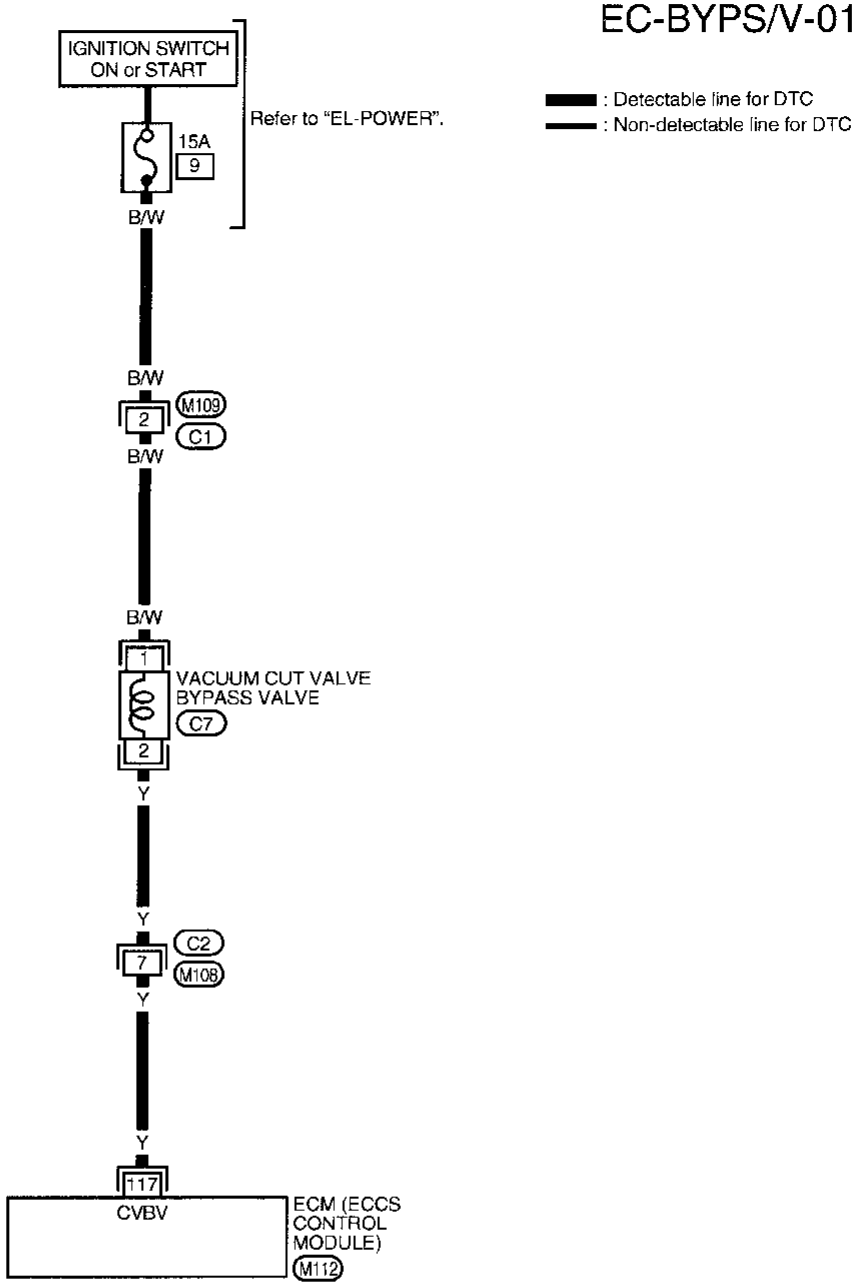

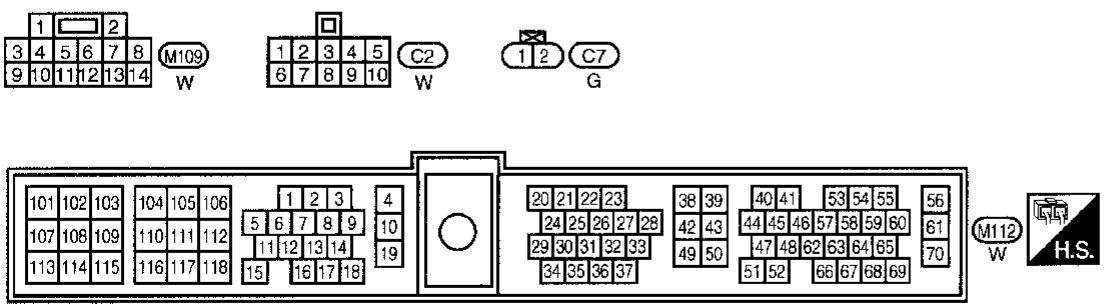

AEC318A

Vacuum Cut Valve Bypass Valve (Cont'd)

DIAGNOSTIC PROCEDURE

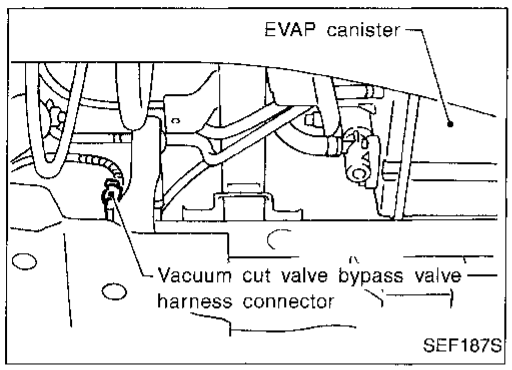

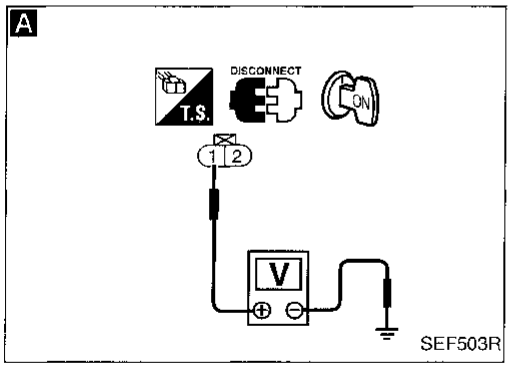

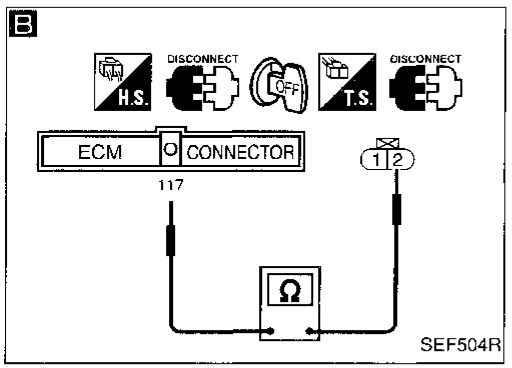

Procedure for malfunction A

INSPECTION START

↓

A

CHECK POWER SUPPLY.
1. Turn ignition switch "OFF".
2. Disconnect vacuum cut valve bypass valve harness connector.
3. Turn ignition switch "ON".
4. Check voltage between terminal ① and ground with CONSULT or tester.
Voltage: Battery voltage

NG → Check the following.
- Harness connectors (C1), (M109)
- 15A fuse
- Harness for open or short between vacuum cut valve bypass valve and fuse

If NG, repair harness or connectors.

↓ OK

B

CHECK OUTPUT SIGNAL CIRCUIT.
1. Turn ignition switch "OFF".
2. Disconnect ECM harness connector.
3. Check harness continuity between ECM terminal (117) and terminal ②.
Continuity should exist.
If OK, check harness for short.

NG → Check the following.
- Harness connectors (C2), (M108)
- Harness for open or short between vacuum cut valve bypass valve and ECM

If NG, repair harness or connectors.

↓ OK

CHECK COMPONENT
(Vacuum cut valve bypass valve).
Refer to "COMPONENT INSPECTION" on next page.

NG → Replace vacuum cut valve bypass valve.

↓ OK

Disconnect and reconnect harness connectors in the circuit. Then retest.

↓ Trouble is not fixed.

Check ECM pin terminals for damage and check the connection of ECM harness connector. Reconnect ECM harness connector and retest.

↓

INSPECTION END

Vacuum Cut Valve Bypass Valve (Cont'd)

DIAGNOSTIC PROCEDURE

Procedure for malfunction B

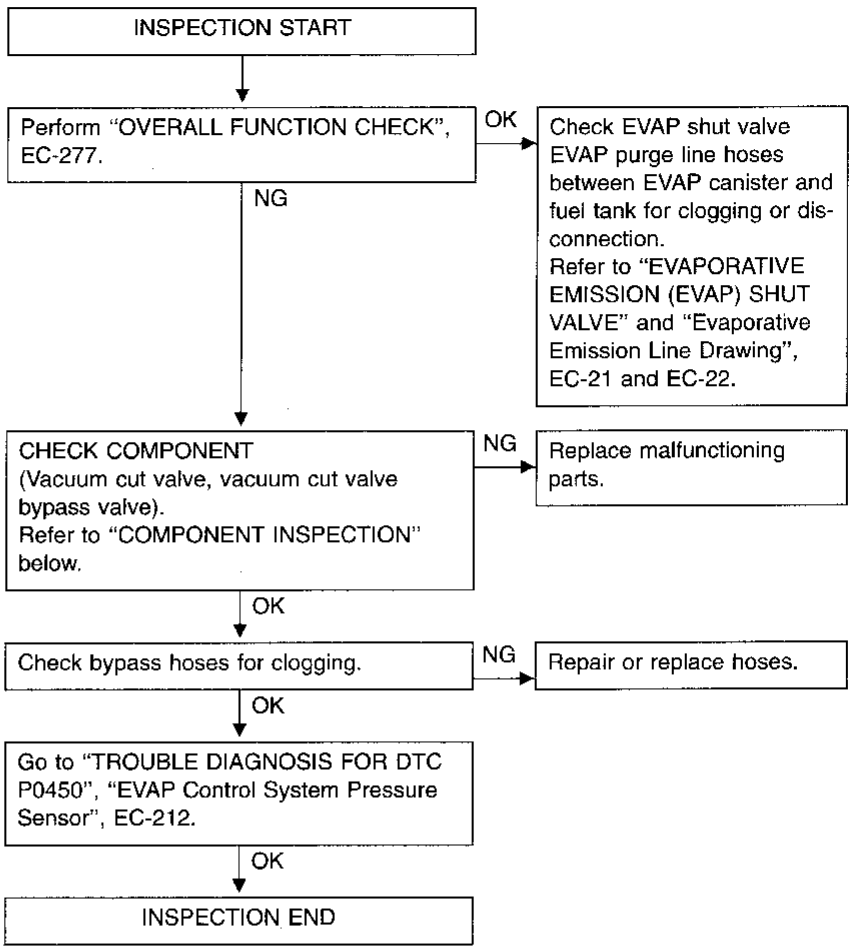

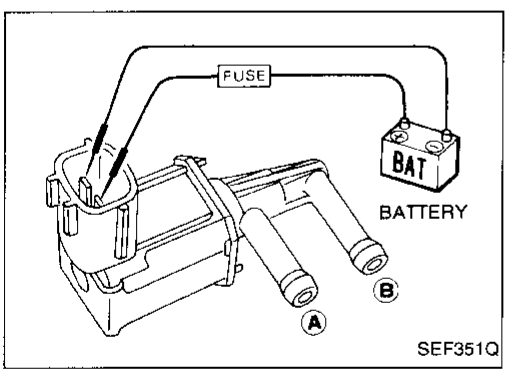

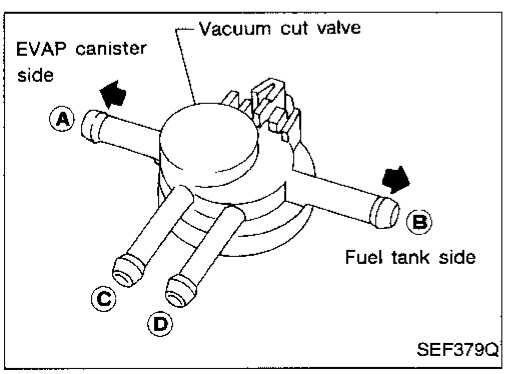

COMPONENT INSPECTION

Vacuum cut valve bypass valve

Check air passage continuity.

Condition	Air passage continuity between Ⓐ and Ⓑ
12V direct current supply between terminals	Yes
No supply	No

If NG, replace vacuum cut valve bypass valve.

Vacuum cut valve

Check vacuum cut valve as follows:

1. Plug port Ⓒ and Ⓓ with fingers.
2. Apply vacuum to port Ⓐ and check that there is no suction from port Ⓑ.
3. Apply vacuum to port Ⓑ and check that there is suction from port Ⓐ.
4. Blow air in port Ⓑ and check that there is a resistance to flow out of port Ⓐ.
5. Open port Ⓒ and Ⓓ.
6. Blow air in port Ⓐ check that air flows freely out of port Ⓒ.
7. Blow air in port Ⓑ check that air flows freely out of port Ⓓ.

Evaporative Emission (EVAP) Canister Purge Volume Control Valve

SYSTEM DESCRIPTION

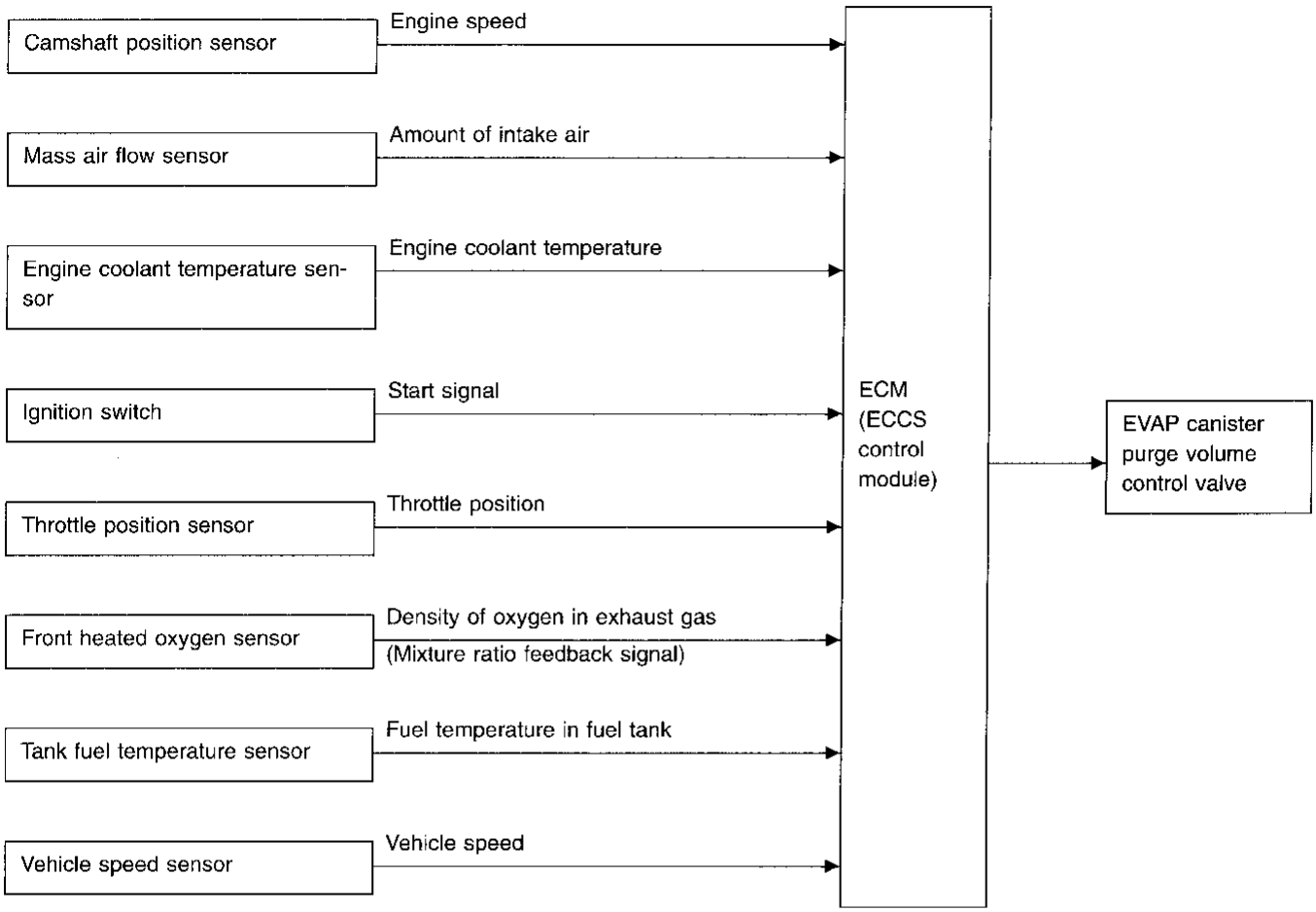

This system controls flow rate of fuel vapor from the EVAP canister. The opening of the vapor by-pass passage in the EVAP canister purge volume control valve changes to control the flow rate. A built-in step motor moves the valve in steps corresponding to the ECM output pulses. The opening of the valve varies for optimum engine control. The optimum value stored in the ECM is determined by considering various engine conditions. When the engine is operating, the flow rate of fuel vapor from the EVAP canister is regulated as the air flow changes.

ECM TERMINALS AND REFERENCE VALUE

Specification data are reference values and are measured between each terminal and 43 (ECCS ground).

TERMINAL NO.	WIRE COLOR	ITEM	CONDITION	DATA (DC voltage)
5	R	EVAP canister purge volume control valve	Engine is running. └ Idle speed	0 - 0.4V or BATTERY VOLTAGE (11 - 14V)
6	L/G			
16	G			
17	Y			

Evaporative Emission (EVAP) Canister Purge Volume Control Valve (Cont'd)

CONSULT REFERENCE VALUE IN DATA MONITOR MODE

Specification data are reference values.

MONITOR ITEM	CONDITION		SPECIFICATION
PURG VOL C/V	• Engine: After warming up • Air conditioner switch: OFF • Shift lever "N" • No-load	Vehicle stopped	0 step
		Vehicle running	—

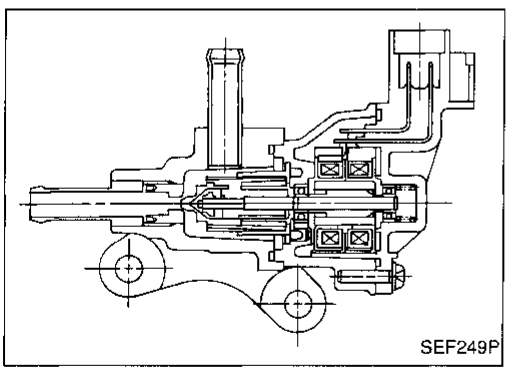

COMPONENT DESCRIPTION

The EVAP canister purge volume control valve uses a step motor to control the flow rate of fuel vapor from the EVAP canister. This motor has four winding phases. It operates according to the output pulse signal of the ECM. Two windings are turned ON and OFF in sequence. Each time an ON pulse is issued, the valve opens or closes, changing the flow rate. When no change in the flow rate is needed, the ECM does not issue the pulse signal. A certain voltage signal is issued so that the valve remains at that particular opening.

ON BOARD DIAGNOSIS LOGIC

Diagnostic Trouble Code No.	Malfunction is detected when	Check Items (Possible Cause)
P1445 1008	A) An improper voltage signal is sent to ECM through the valve.	• Harness or connectors (The valve circuit is open or shorted.) • EVAP canister purge volume control valve
	B) The canister purge flow is detected during the specified driving conditions, even when EVAP canister purge volume control valve is completely closed.	• EVAP control system pressure sensor • EVAP canister purge volume control valve (The valve is stuck open.) • EVAP canister purge control valve • Hoses (Hoses are connected incorrectly.)

Evaporative Emission (EVAP) Canister Purge Volume Control Valve (Cont'd)

DIAGNOSTIC TROUBLE CODE CONFIRMATION PROCEDURE

Perform "Procedure for malfunction A" first. If the 1st trip DTC cannot be confirmed, perform "Procedure for malfunction B".

Procedure for malfunction A

1) Lift up vehicle.
2) Turn ignition switch "ON" and select "DATA MONITOR" mode with CONSULT.
3) Start engine and let it idle for at least 90 seconds.
4) Move selector/gearshift lever to "1" range (A/T) or "1st" gear (M/T).
5) Rev engine from idle to 2,000 to 3,000 rpm more than 10 times.

OR

1) Lift up vehicle.
2) Start engine and let it idle for at least 90 seconds.
3) Move selector/gearshift lever to "1" range (A/T) or "1st" gear (M/T).
4) Rev engine from idle to 2,000 to 3,000 rpm more than 10 times.
5) Select "MODE 3" with GST.

OR

1) Lift up vehicle.
2) Start engine and let it idle for at least 90 seconds.
3) Move selector/gearshift lever to "1" range (A/T) or "1st" gear (M/T).
4) Rev engine from idle to 2,000 to 3,000 rpm more than 10 times.
5) Turn ignition switch "OFF", wait at least 7 seconds and then turn "ON".
6) Perform "Diagnostic Test Mode II (Self-diagnostic results)" with ECM.

Procedure for malfunction B

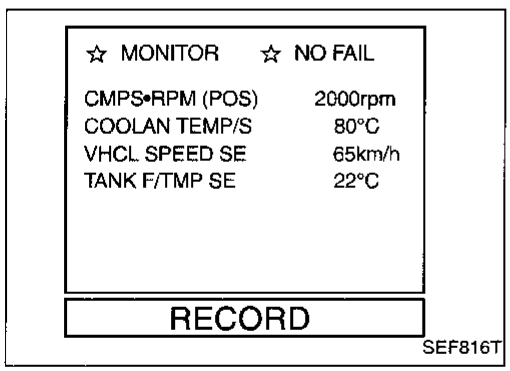

1) Lift up vehicle.
2) Turn ignition switch "ON" and select "DATA MONITOR" mode with CONSULT.
3) Start engine and warm it up sufficiently.
4) Check that tank fuel temperature is above 0°C (32°F).
5) Turn ignition switch "OFF" and wait at least 7 seconds.
6) Turn ignition switch "ON" and wait at least 12 seconds.
7) Start engine and let it idle for at least 70 seconds.
8) Maintain the following conditions for at least 25 seconds.

Gear position:
"2" or "D" range (A/T)
"3rd" or "4th" gear (M/T)
Vehicle speed:
50 - 70 km/h (31 - 43 MPH)
Engine speed:
1,500 - 2,500 rpm
Coolant temperature:
Less than 100°C (212°F)

Evaporative Emission (EVAP) Canister Purge Volume Control Valve (Cont'd)

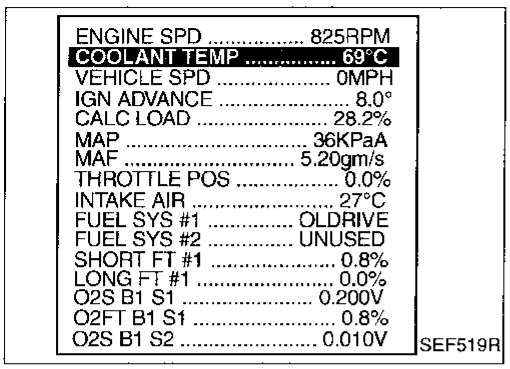

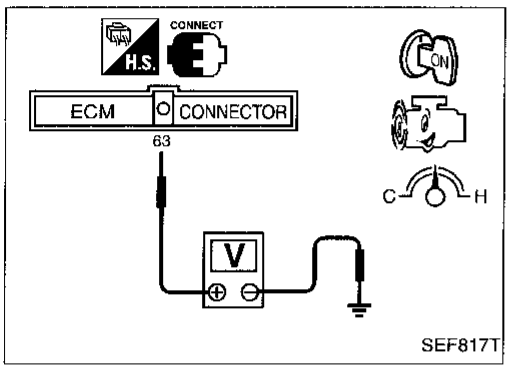

OR

1) Lift up vehicle.
2) Turn ignition switch "ON" and select "MODE 1" mode with GST.
3) Start engine and warm it up sufficiently.
4) Check that voltage between ECM terminal ⑥③ and ground is less than 4.2V.
5) Turn ignition switch "OFF" and wait at least 7 seconds.
6) Turn ignition switch "ON" and wait at least 12 seconds.
7) Start engine and let it idle for at least 70 seconds.
8) Maintain the following conditions for at least 25 seconds.

   Gear position:
   "2" or "D" range (A/T)
   "3rd" or "4th" gear (M/T)
   Vehicle speed:
   50 - 70 km/h (31 - 43 MPH)
   Engine speed:
   1,500 - 2,500 rpm
   Coolant temperature:
   Less than 100°C (212°F)

9) Select "MODE 3" with GST.

OR

1) Lift up vehicle.
2) Turn ignition switch "ON".
3) Start engine and warm it up sufficiently.
4) Check that voltage between ECM terminal ⑥③ and ground is less than 4.2V.
5) Turn ignition switch "OFF" and wait at least 7 seconds.
6) Turn ignition switch "ON" and wait at least 12 seconds.
7) Start engine and let it idle for at least 70 seconds.
8) Maintain the following conditions for at least 25 seconds.

   Gear position:
   "2" or "D" range (A/T)
   "3rd" or "4th" gear (M/T)
   Vehicle speed:
   50 - 70 km/h (31 - 43 MPH)
   Engine speed:
   1,500 - 2,500 rpm
   Voltage between ECM terminal ⑤① and ground:
   More than 0.8V

9) Turn ignition switch "OFF", wait at least 7 seconds and then turn "ON".
10) Perform "Diagnostic Test Mode II (Self-diagnostic results)" with ECM.

Evaporative Emission (EVAP) Canister Purge Volume Control Valve (Cont'd)

EC-PGC/V-01

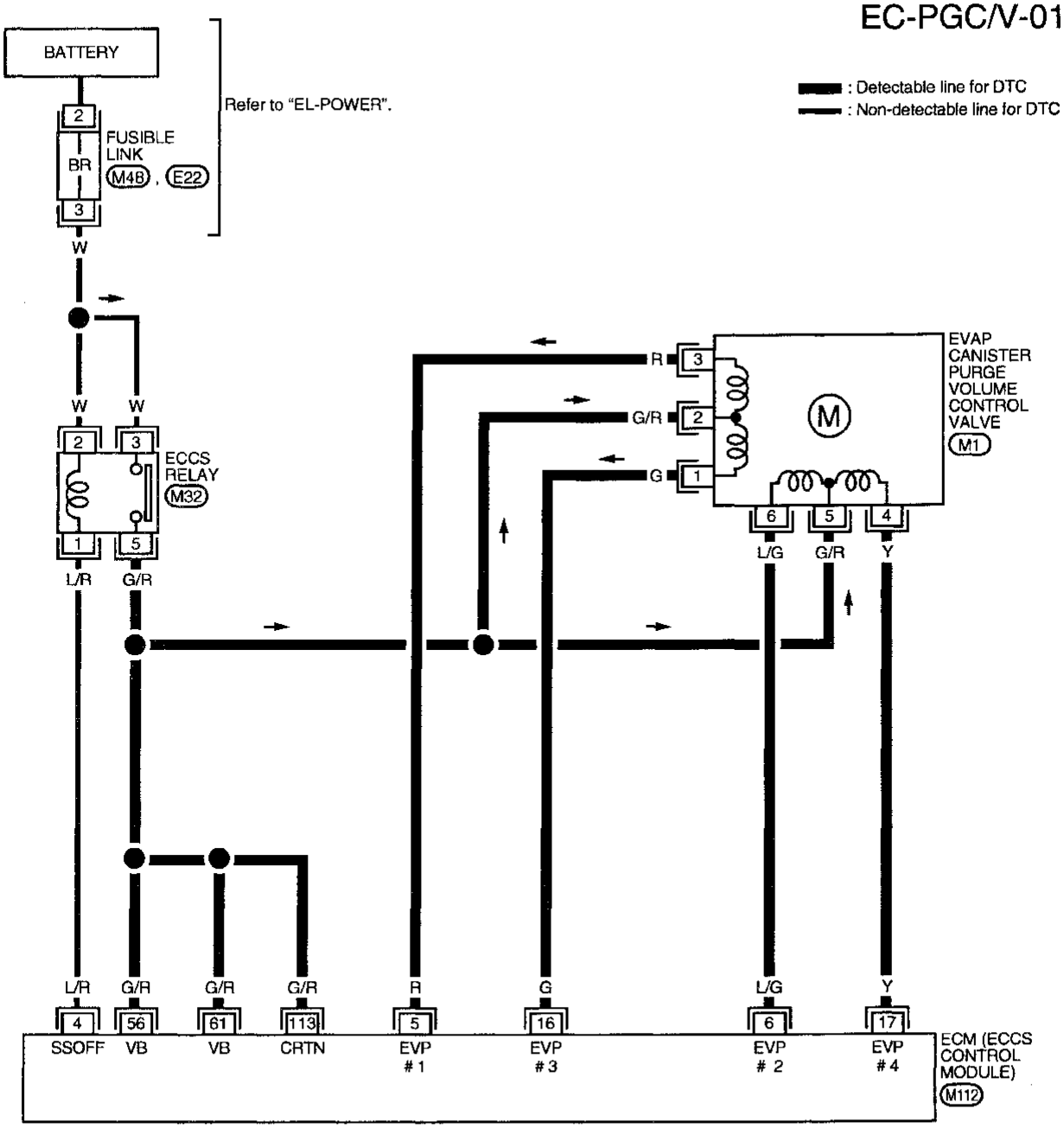

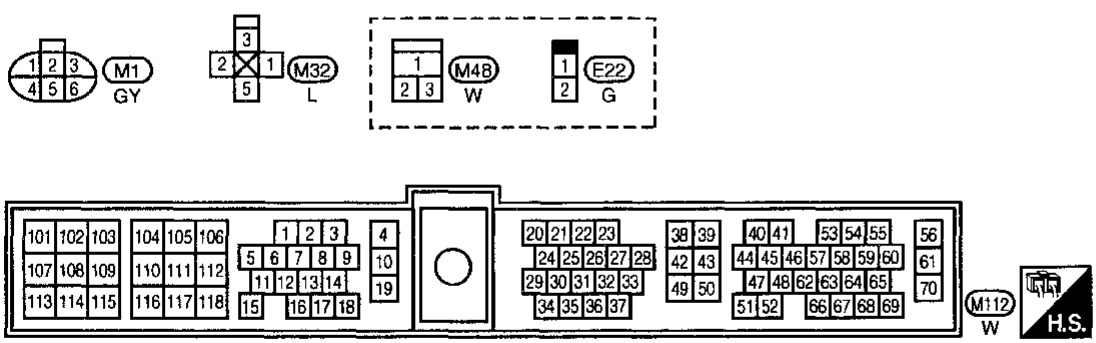

AEC067A

Evaporative Emission (EVAP) Canister Purge Volume Control Valve (Cont'd)

DIAGNOSTIC PROCEDURE

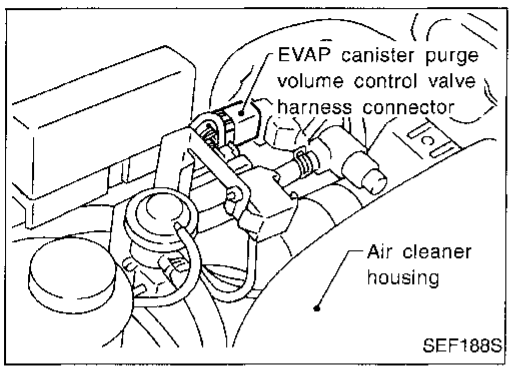

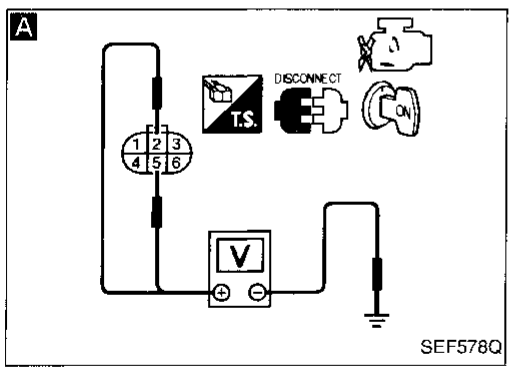

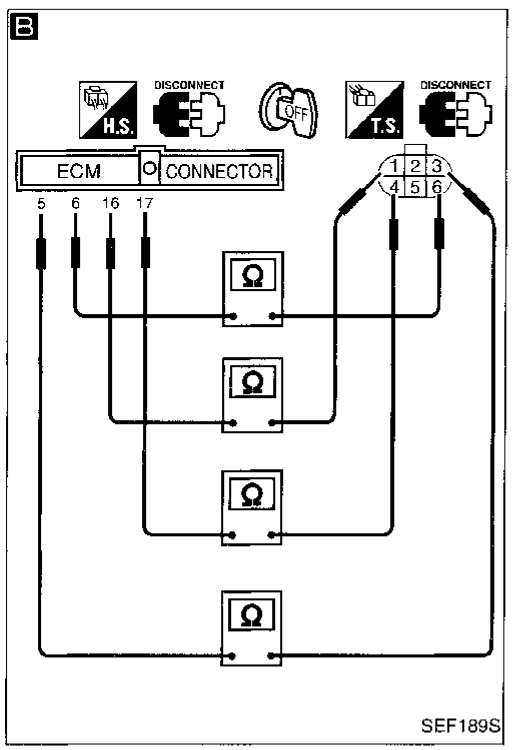

INSPECTION START

↓

A

CHECK POWER SUPPLY.
1. Turn ignition switch "OFF".
2. Disconnect EVAP canister purge volume control valve harness connector.
3. Turn ignition switch "ON".
4. Check voltage between terminals ②, ⑤ and engine ground with CONSULT or tester.

Voltage: Battery voltage

NG → Check the following.
- ECCS relay
- BR fusible link
- Harness for open or short between EVAP canister purge volume control valve and fusible link
- Harness for open or short between EVAP canister purge volume control valve and ECM

If NG, repair harness or connectors.

OK ↓

B

CHECK OUTPUT SIGNAL CIRCUIT.
1. Turn ignition switch "OFF".
2. Disconnect ECM harness connector.
3. Check harness continuity between
   ECM terminal ⑯ and terminal ①,
   ECM terminal ⑰ and terminal ④,
   ECM terminal ⑤ and terminal ③,
   ECM terminal ⑥ and terminal ⑥.

Continuity should exist.
If OK, check harness for short.

NG → Repair harness or connectors.

OK ↓

CHECK COMPONENT
(EVAP control system pressure sensor)
(For malfunction B only).
Refer to "COMPONENT INSPECTION" in "TROUBLE DIAGNOSIS FOR DTC P0450", EC-216.

NG → Replace EVAP control system pressure sensor.

OK ↓

CHECK COMPONENT
(EVAP canister purge volume control valve).
Refer to "COMPONENT INSPECTION" on next page.

NG → Replace EVAP canister purge volume control valve.

OK ↓

Disconnect and reconnect harness connectors in the circuit. Then retest.

Trouble is not fixed. ↓

Check ECM pin terminals for damage and check the connection of ECM harness connector. Reconnect ECM harness connector and retest.

↓

INSPECTION END

Evaporative Emission (EVAP) Canister Purge Volume Control Valve (Cont'd)

COMPONENT INSPECTION

EVAP canister purge volume control valve

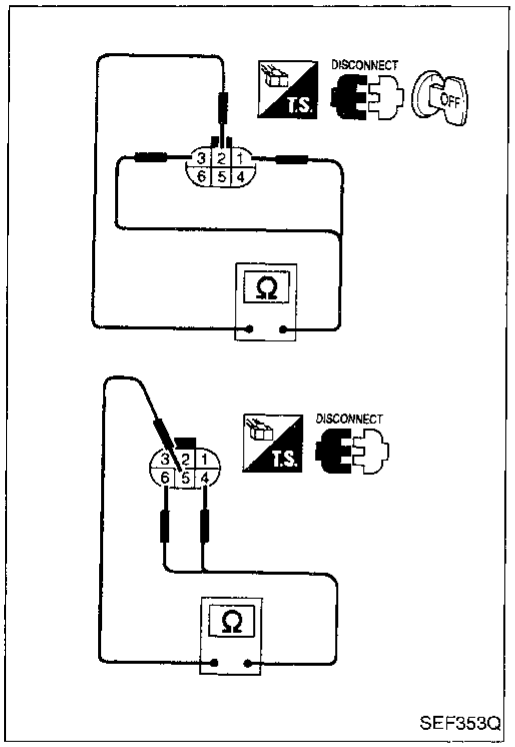

SEF353Q

1. Disconnect EVAP canister purge volume control valve harness connector.
2. Check resistance between the following terminals.
   terminal ② and terminals ①, ③
   terminal ⑤ and terminals ④, ⑥
   Resistance:
   Approximately 30Ω [At 25°C (77°F)]
3. Reconnect EVAP canister purge volume control valve harness connector.
4. Remove EVAP canister purge volume control valve from intake manifold collector and disconnect hoses from the valve.
   (Plug the purge hoses. The EVAP canister purge volume control valve harness connector should remain connected.)
5. Turn ignition switch "ON".
6. Perform "PURG VOL CONT/V" in "ACTIVE TEST" mode with CONSULT. Check that EVAP canister purge volume control valve shaft moves smoothly forward and backward according to the valve opening.
   If NG, replace the EVAP canister purge volume control valve.

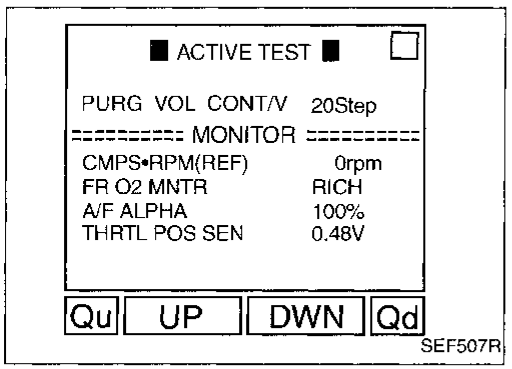

SEF507R

— OR —

1. Disconnect EVAP canister purge volume control valve harness connector.
2. Check resistance between the following terminals.
   terminal ② and terminals ①, ③
   terminal ⑤ and terminals ④, ⑥
   Resistance:
   Approximately 30Ω [At 25°C (77°F)]
3. Reconnect EVAP canister purge volume control valve harness connector.
4. Remove EVAP canister purge volume control valve from intake manifold collector and disconnect hoses from the valve.
   (Plug the purge hoses. The EVAP canister purge volume control valve harness connector should remain connected.)
5. Turn ignition switch "ON" and "OFF". Check that EVAP canister purge volume control valve shaft moves smoothly forward and backward according to the ignition switch position.
   If NG, replace the EVAP canister purge volume control valve.

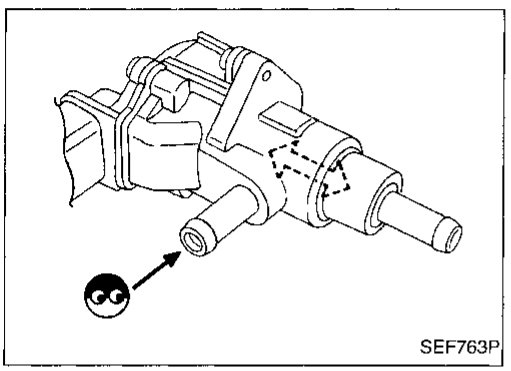
SEF763P

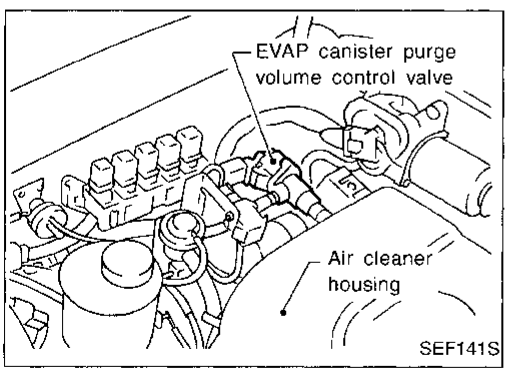

SEF141S

Evaporative Emission (EVAP) Control System Purge Flow Monitoring

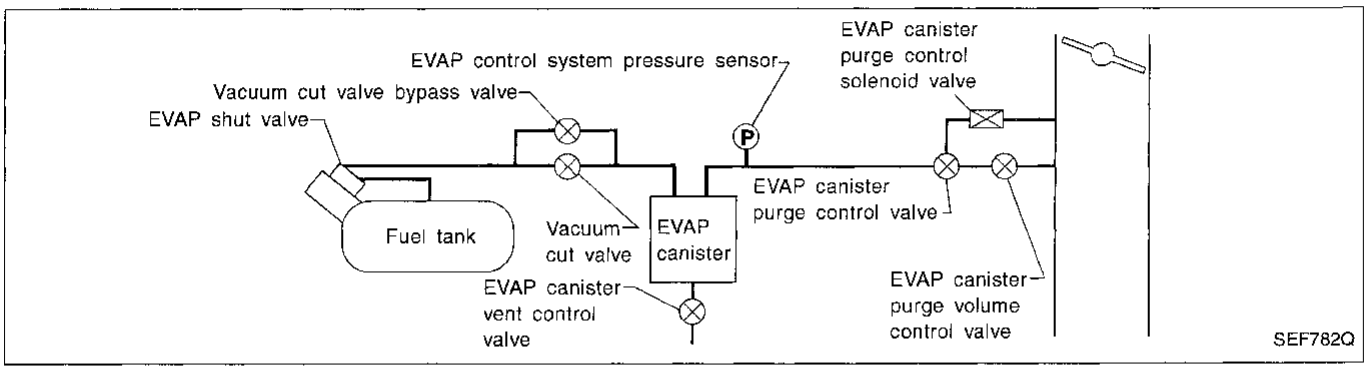

SYSTEM DESCRIPTION

In this evaporative emission (EVAP) control system, purge flow occurs during non-closed throttle conditions. Purge volume is related to air intake volume. Under normal purge conditions (non-closed throttle), the EVAP canister purge volume control valve and EVAP canister purge control valve are open. Purge flow exposes the EVAP control system pressure sensor to intake manifold vacuum.

ON BOARD DIAGNOSIS LOGIC

Under normal conditions (non-closed throttle), sensor output voltage indicates if pressure drop and purge flow are adequate. If not, a fault is determined.

Diagnostic Trouble Code No.	Malfunction is detected when	Check Items (Possible Cause)
P1447 0111	● EVAP control system does not operate properly. ● EVAP control system has a leak between intake manifold and EVAP control system pressure sensor.	● EVAP canister purge volume control valve stuck closed ● EVAP canister purge control valve stuck closed ● EVAP control system pressure sensor ● Loose or disconnected rubber tube ● Blocked rubber tube ● EVAP canister purge control solenoid valve ● Blocked or bent rubber tube to MAP/BARO switch solenoid valve ● Cracked EVAP canister ● Absolute pressure sensor ● MAP/BARO switch solenoid valve

Evaporative Emission (EVAP) Control System Purge Flow Monitoring (Cont'd)

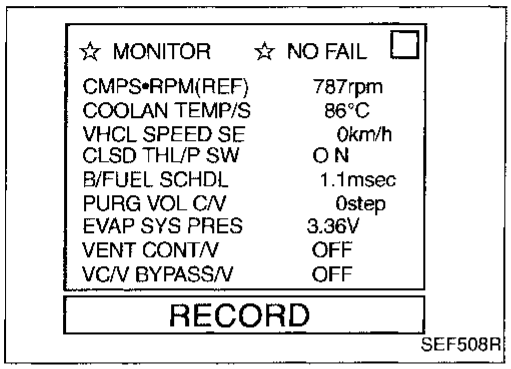

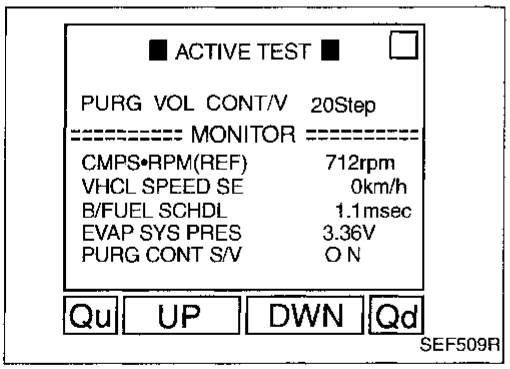

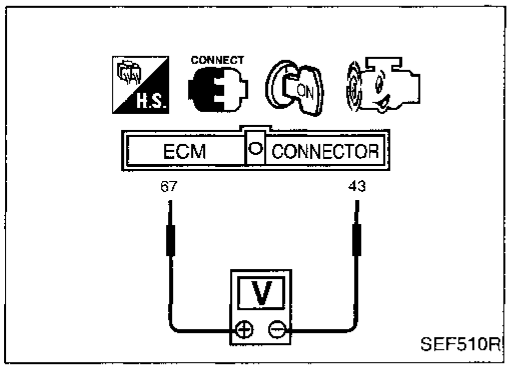

OVERALL FUNCTION CHECK

Use this procedure to check the overall monitoring function of the EVAP control system purge flow. During this check, a 1st trip DTC might not be confirmed.

1) Lift up vehicle.
2) Start engine.
3) Select "EVAP SYS PRES" in "DATA MONITOR" mode with CONSULT.
4) Check EVAP control system pressure sensor value at idle speed.
5) Select "PURG VOL CONT/V" in "ACTIVE TEST" mode with CONSULT and set "PURG VOL CONT/V" to 20 steps by touching "UP" or "Qu".
6) Maintain the following conditions for at least 30 seconds. Verify that EVAP control system pressure sensor value ("EVAP SYS PRES") stays 0.1V less than the value at idle speed for at least 2 seconds.

   Engine speed:
   Approx. 2,000 rpm
   Gear position (for M/T models):
   Any position other than "Neutral" or "Reverse"

CAUTION:
Do not run vehicle at speeds greater than 80 km/h (50 MPH).

OR

1) Lift up vehicle.
2) Start engine and warm it up sufficiently.
3) Turn ignition switch "OFF", wait at least 7 seconds.
4) Start engine and wait at least 70 seconds.
5) Set voltmeter probes to ECM terminals (67) (EVAP control system pressure sensor signal) and (43) (ground).
6) Check EVAP control system pressure sensor value at idle speed.
7) Establish and maintain the following conditions for at least 30 seconds.

   Air conditioner switch: ON
   Steering wheel: Fully turned
   Headlamp switch: ON
   Engine speed: Approx. 3,500 rpm
   Intake manifold vacuum:
   –73.3 to –60.0 kPa (–550 to –450 mmHg, –21.65 to –17.72 inHg, –10.63 to –8.70 psi)
   Gear position:
   M/T models
   Any position other than "Neutral" or "Reverse"
   A/T models
   Any position other than "P", "N" or "R".

   Return all conditions to normal. Repeat this procedure at least 5 times.
   Verify that EVAP control system pressure sensor value stays 0.1V less than the value at idle speed for at least 2 seconds.

CAUTION:
Do not run vehicle at speeds greater than 80 km/h (50 MPH).

Evaporative Emission (EVAP) Control System Purge Flow Monitoring (Cont'd)

DIAGNOSTIC PROCEDURE

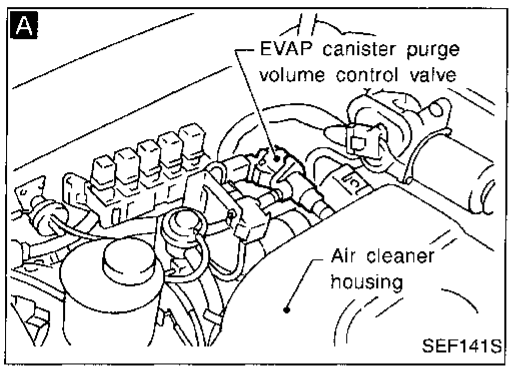

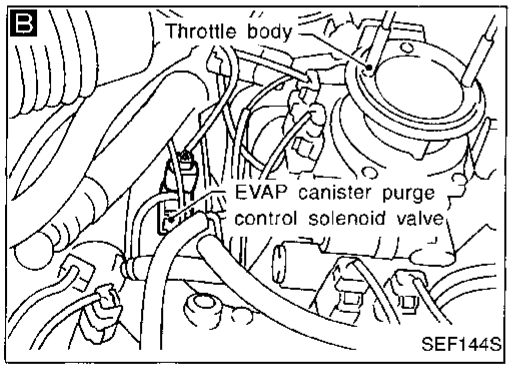

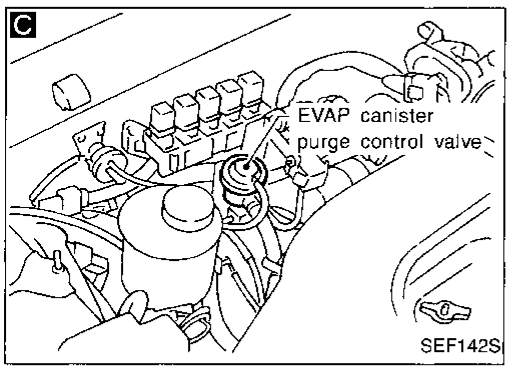

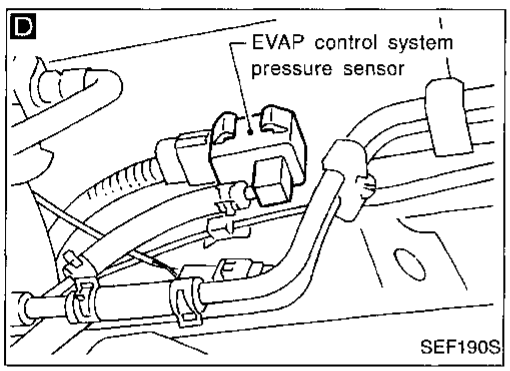

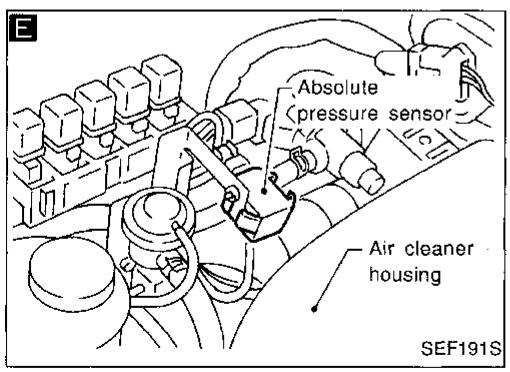

INSPECTION START

↓

CHECK EVAP CANISTER.
Check EVAP canister for cracks.
→ NG → Replace EVAP canister.
↓ OK

CHECK EVAP PURGE LINE.
Check EVAP purge line for improper connection.
Refer to "EVAPORATIVE EMISSION SYSTEM", EC-22.
→ NG → Repair it.
↓ OK

A

CHECK COMPONENT
(EVAP canister purge volume control valve).
Refer to "COMPONENT INSPECTION", EC-292.
→ NG → Replace EVAP canister purge volume control valve.
↓ OK

B

CHECK COMPONENT
(EVAP canister purge control solenoid valve).
Refer to "COMPONENT INSPECTION", EC-293.
→ NG → Replace EVAP canister purge control solenoid valve.
↓ OK

C

CHECK COMPONENT
(EVAP canister purge control valve).
Refer to "COMPONENT INSPECTION", EC-293.
→ NG → Replace EVAP canister purge control valve.
↓ OK

D

CHECK COMPONENT
(EVAP control system pressure sensor).
Refer to "COMPONENT INSPECTION", EC-293.
→ NG → Replace EVAP control system pressure sensor.
↓ OK

E

CHECK COMPONENT
(Absolute pressure sensor).
Refer to "COMPONENT INSPECTION", EC-294.
→ NG → Replace absolute pressure sensor.
↓ OK

Ⓐ
(Go to next page.)

Evaporative Emission (EVAP) Control System Purge Flow Monitoring (Cont'd)

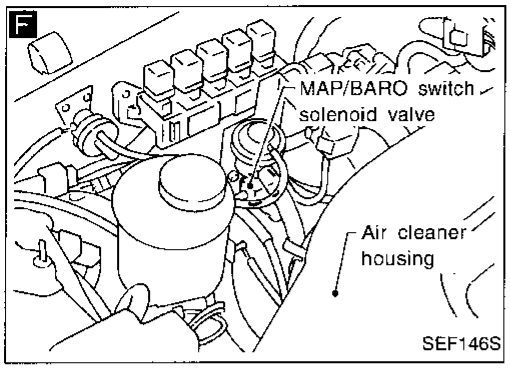

Ⓐ

F

CHECK COMPONENT
(MAP/BARO switch solenoid valve).
Refer to "COMPONENT INSPECTION", EC-294.

NG → Replace MAP/BARO switch solenoid valve.

OK ↓

CHECK EVAP PURGE LINE.
Inspect EVAP purge line (pipe and rubber tube). Check for evidence of leaks.

NG → Replace it.

OK ↓

Clean EVAP purge line (pipe and rubber tube) using air blower.

↓

Disconnect and reconnect harness connectors in the circuit. Then retest.

Trouble is not fixed. ↓

Check ECM pin terminals for damage and check the connection of ECM harness connector. Reconnect ECM harness connector and retest.

↓

INSPECTION END

Evaporative Emission (EVAP) Control System Purge Flow Monitoring (Cont'd)

COMPONENT INSPECTION

EVAP canister purge volume control valve

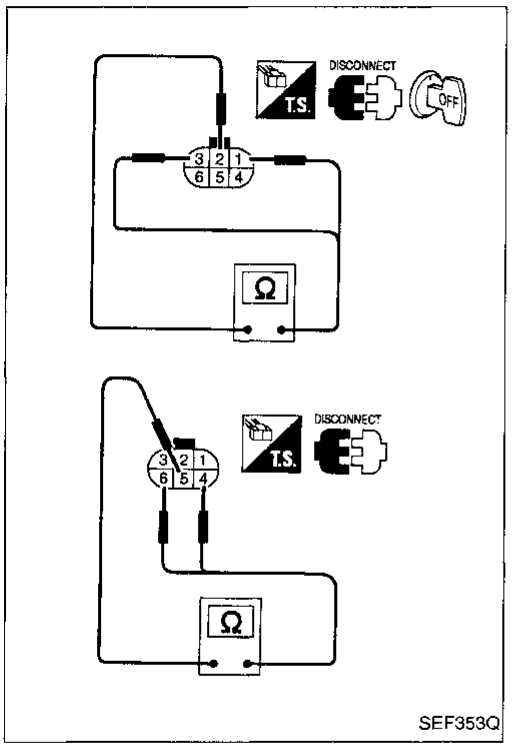

SEF353Q

1) Disconnect EVAP canister purge volume control valve harness connector.
2) Check resistance between the following terminals.
   terminal ② and terminals ①, ③
   terminal ⑤ and terminals ④, ⑥
   Resistance:
   Approximately 30Ω [At 25°C (77°F)]
3) Reconnect EVAP canister purge volume control valve harness connector.
4) Remove EVAP canister purge volume control valve from intake manifold collector and disconnect hoses from the valve.
   (Plug the purge hoses. The EVAP canister purge volume control valve harness connector should remain connected.)
5) Turn ignition switch "ON".
6) Perform "PURG VOL CONT/V" in "ACTIVE TEST" mode with CONSULT. Check that EVAP canister purge volume control valve shaft moves smoothly forward and backward according to the valve opening.
   If NG, replace the EVAP canister purge volume control valve.

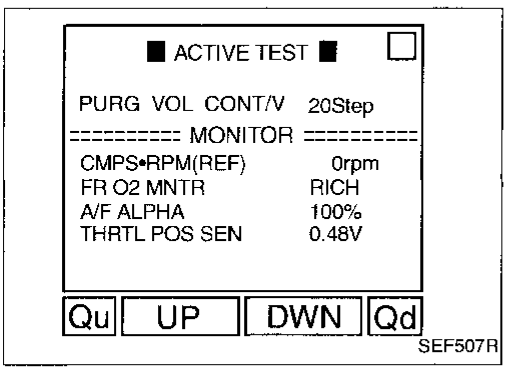

SEF507R

OR

1) Disconnect EVAP canister purge volume control valve harness connector.
2) Check resistance between the following terminals.
   terminal ② and terminals ①, ③
   terminal ⑤ and terminals ④, ⑥
   Resistance:
   Approximately 30Ω [At 25°C (77°F)]
3) Reconnect EVAP canister purge volume control valve harness connector.
4) Remove EVAP canister purge volume control valve from intake manifold collector and disconnect hoses from the valve.
   (Plug the purge hoses. The EVAP canister purge volume control valve harness connector should remain connected.)
5) Turn ignition switch "ON" and "OFF". Check that EVAP canister purge volume control valve shaft moves smoothly forward and backward according to the ignition switch position.
   If NG, replace the EVAP canister purge volume control valve.

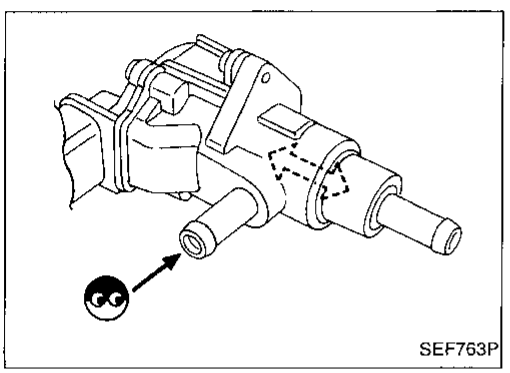
SEF763P

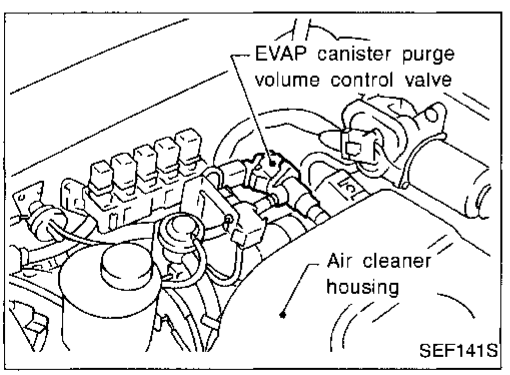

SEF141S

Evaporative Emission (EVAP) Control System Purge Flow Monitoring (Cont'd)

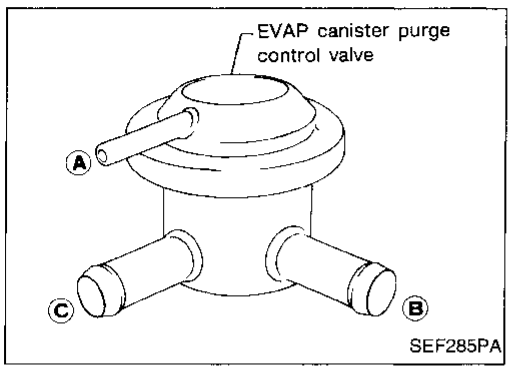

EVAP canister purge control valve

Check EVAP canister purge control valve as follows:

1. Plug the port Ⓑ.
2. Apply pressure [80.0 kPa (600 mmHg, 23.62 inHg, 11.60 psi)] to port Ⓐ. Then keep it for 15 seconds, and check there is no leakage.
3. Repeat step 2 for port Ⓒ.

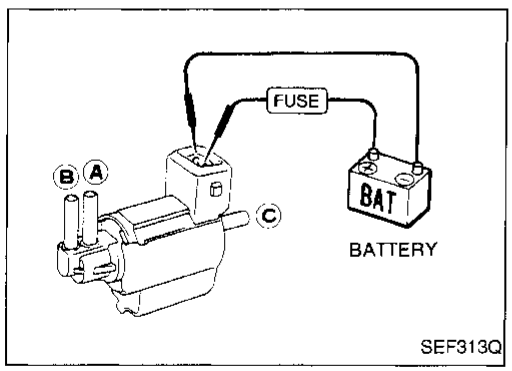

EVAP canister purge control solenoid valve

Check air passage continuity.

Condition	Air passage continuity between Ⓐ and Ⓑ	Air passage continuity between Ⓐ and Ⓒ
12V direct current supply between terminals	Yes	No
No supply	No	Yes

If NG, replace solenoid valve.

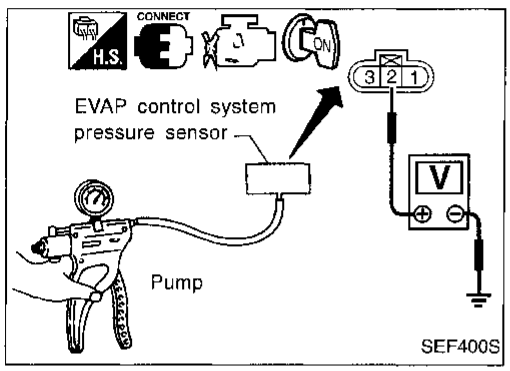

EVAP control system pressure sensor

1. Remove EVAP control system pressure sensor with its harness connector connected.
2. Remove hose from EVAP control system pressure sensor.
3. Use pump to apply vacuum and pressure to EVAP control system pressure sensor as shown in figure.
4. Check output voltage between terminal ② and engine ground.

Pressure (Relative to atmospheric pressure)	Voltage (V)
0 kPa (0 mmHg, 0 inHg, 0 psi)	3.0 - 3.6
−9.3 kPa (−70 mmHg, −2.76 inHg, −1.35 psi)	0.4 - 0.6

CAUTION:
Always calibrate the vacuum pump gauge when using it.

5. If NG, replace EVAP control system pressure sensor.

Evaporative Emission (EVAP) Control System Purge Flow Monitoring (Cont'd)

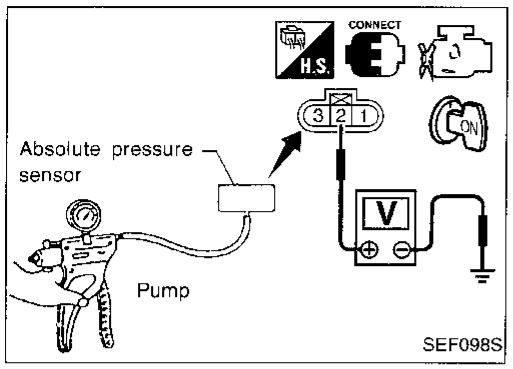

Absolute pressure sensor

1. Remove absolute pressure sensor with its harness connector connected.
2. Remove hose from absolute pressure sensor.
3. Turn ignition switch "ON" and check output voltage between terminal ② and engine ground.
   The voltage should be 3.2 to 4.8 V.
4. Use pump to apply vacuum of –26.7 kPa (–200 mmHg, –7.87 inHg, –3.87 psi) to absolute pressure sensor as shown in figure and check the output voltage.
   The voltage should be 1.0 to 1.4 V lower than the value measured in step 3.

CAUTION:
Always calibrate the vacuum pump gauge when using it.

5. If NG, replace absolute pressure sensor.

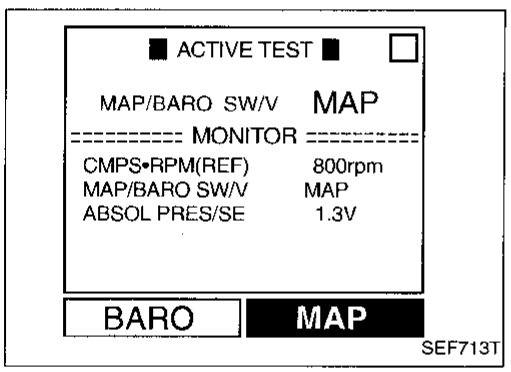

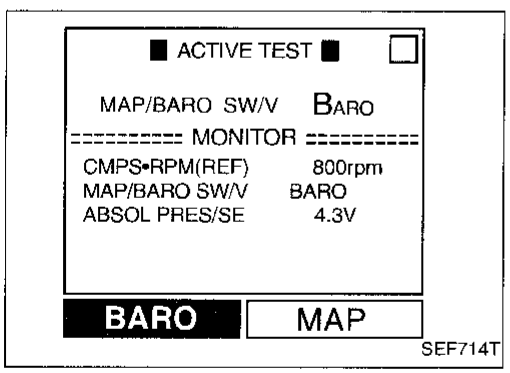

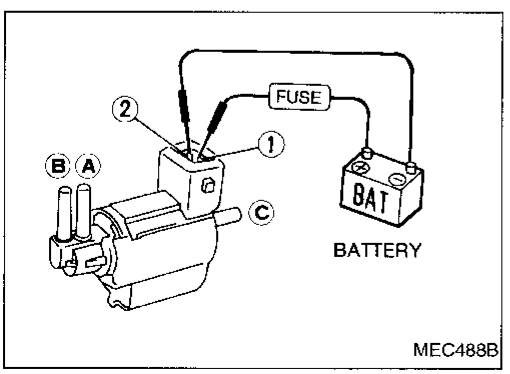

MAP/BARO switch solenoid valve

1. Start engine and warm it up sufficiently.
2. Perform "MAP/BARO SW/V" in "ACTIVE TEST" mode with CONSULT.
3. Check the following.
   - When "MAP" is selected, "ABSOL PRES/SE" indicates approximately 1.3V.
   - When "BARO" is selected, "ABSOL PRES/SE" indicates approximately 4.3V.
4. If NG, replace solenoid valve.

OR

1. Remove MAP/BARO switch solenoid valve.
2. Check air passage continuity.

Condition	Air passage continuity between Ⓐ and Ⓑ	Air passage continuity between Ⓐ and Ⓒ
12V direct current supply between terminals ① and ②	Yes	No
No supply	No	Yes

3. If NG, replace solenoid valve.

Torque Converter Clutch Solenoid Valve

SYSTEM DESCRIPTION

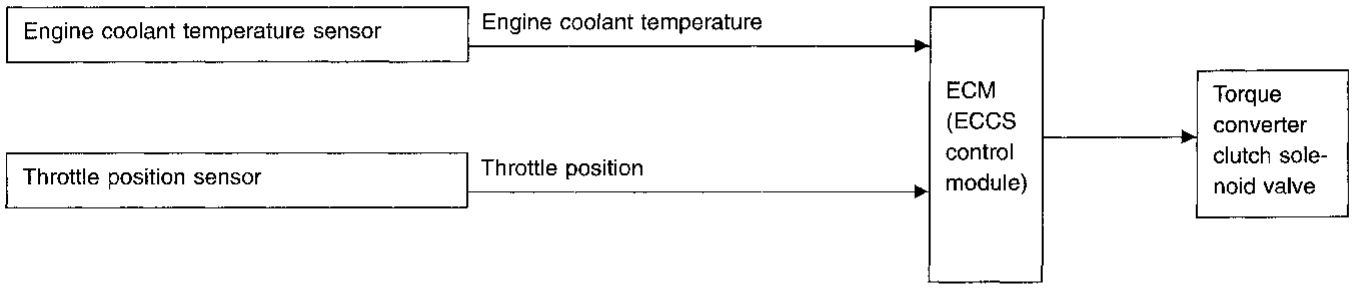

The ECM controls torque converter clutch solenoid valve to cancel the lock-up condition of A/T. When the solenoid valve is turned on, lock-up is cancelled. When the solenoid valve is turned off, A/T lock-up is operational.

Conditions for lock-up cancel:

- Throttle valve is fully closed (idling or deceleration)
- Engine coolant temperature is below 40°C (104°F)

ECM TERMINALS AND REFERENCE VALUE

Specification data are reference values and are measured between each terminal and ㊸ (ECCS ground).

TERMINAL NO.	WIRE COLOR	ITEM	CONDITION	DATA (DC voltage)
114	L/Y	Torque converter clutch solenoid valve	Engine is running. — Idle speed — Engine coolant temperature is below 40°C (104°F)	Approximately 0V
			Engine is running. — After warming up — Engine coolant temperature is above 40°C (104°F) — Engine speed is 2,000 rpm	BATTERY VOLTAGE (11 - 14V)

CONSULT REFERENCE VALUE IN DATA MONITOR MODE

Specification data are reference values.

MONITOR ITEM	CONDITION		SPECIFICATION
TCC SOL/V	• Engine speed: Idle • Engine coolant temperature below 40°C (104°F)		ON
	• Engine: After warming up • Engine coolant temperature above 40°C (104°F)	2,000 rpm	OFF

Torque Converter Clutch Solenoid Valve (Cont'd)

ON BOARD DIAGNOSIS LOGIC

Diagnostic Trouble Code No.	Malfunction is detected when	Check Items (Possible Cause)
P1550 0904	• An excessively low voltage from the solenoid is sent to ECM. • A/T torque converter slip is occurred in lock-up condition.	• Harness or connectors (The circuit is open or shorted.) • Torque converter clutch solenoid valve • A/T hydraulic control system • Torque converter

DIAGNOSTIC TROUBLE CODE CONFIRMATION PROCEDURE

1) Turn ignition switch "ON".
2) Select "DATA MONITOR" mode with CONSULT.
3) Start engine and warm it up sufficiently.
4) Perform test drive in "D" position for at least 20 seconds continuously under the following conditions.
   Engine speed: 2,000 - 2,700 rpm
   Vehicle speed: 75 - 95 km/h (45 - 60 MPH)

OR

1) Start engine and warm it up sufficiently.
2) Perform test drive in "D" position for at least 20 seconds continuously under the following conditions.
   Engine speed: 2,000 - 2,700 rpm
   Vehicle speed: 75 - 95 km/h (45 - 60 MPH)
3) Select MODE 7 with GST.

OR

1) Start engine and warm it up sufficiently.
2) Perform test drive in "D" position for at least 20 seconds continuously under the following conditions.
   Engine speed: 2,000 - 2,700 rpm
   Vehicle speed: 75 - 95 km/h (45 - 60 MPH)
3) Stop the vehicle, turn ignition switch "OFF", wait at least 7 seconds and then turn "ON".
4) Perform "Diagnostic Test Mode II (Self-diagnostic results)" with ECM.

Torque Converter Clutch Solenoid Valve (Cont'd)

EC-TCV-01

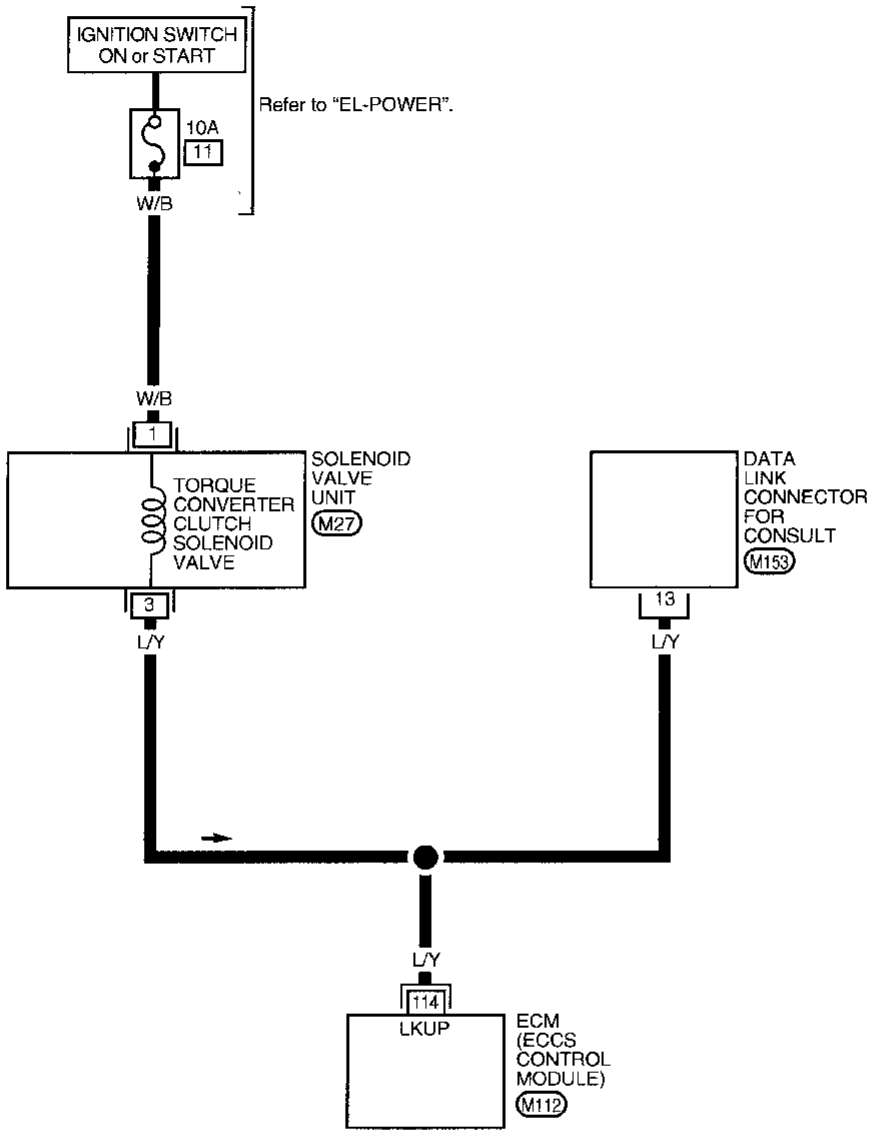

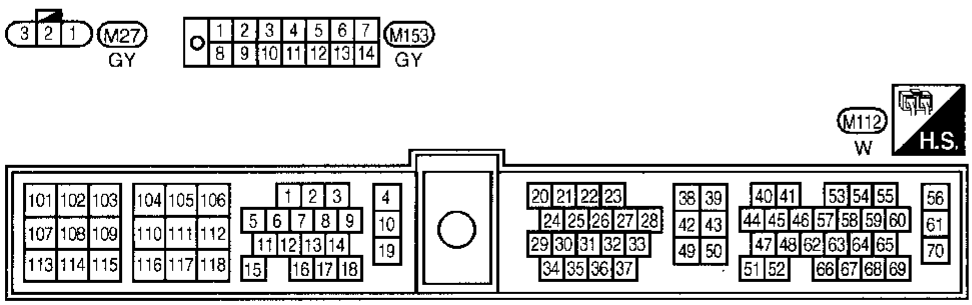

AEC320A

Torque Converter Clutch Solenoid Valve (Cont'd)

DIAGNOSTIC PROCEDURE

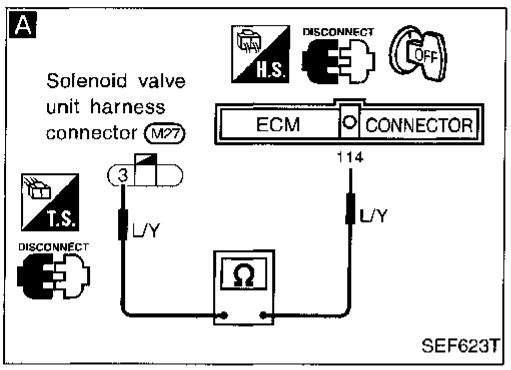

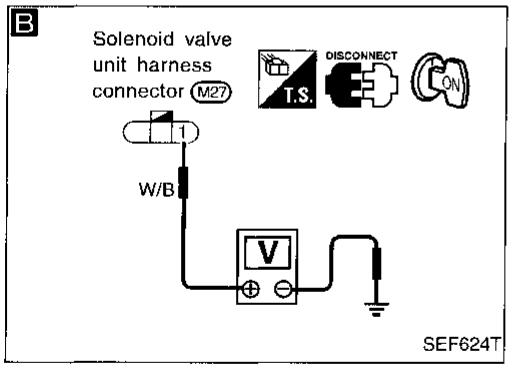

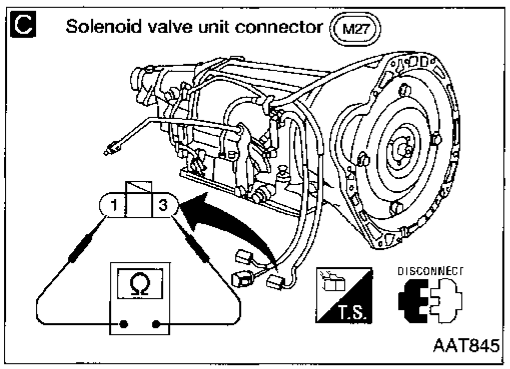

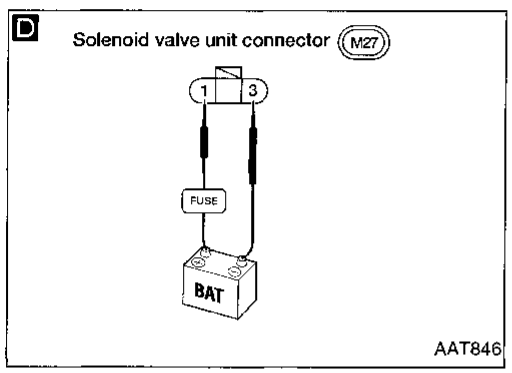

INSPECTION START

↓

A

CHECK GROUND CIRCUIT.
1. Turn ignition switch to OFF position.
2. Disconnect ECM harness connector and torque converter clutch solenoid valve harness connector.
3. Check resistance between solenoid valve unit harness terminal No. (3) and ECM harness terminal No. (114).

Resistance:
Approximately 0Ω

No → Repair or replace harness between ECM and torque converter clutch solenoid valve.

Yes ↓

B

CHECK POWER SOURCE CIRCUIT.
1. Turn ignition switch to ON position.
2. Check voltage between solenoid valve unit harness terminal No. (1) and ground.

Voltage:
Battery voltage

No → Check the following items:
- Ignition switch and fuse Refer to EL section ("POWER SUPPLY ROUTING").
- Harness continuity between fuse and torque converter clutch solenoid valve

Yes ↓

C

CHECK TORQUE CONVERTER CLUTCH SOLENOID VALVE (RESISTANCE).
Check resistance between torque converter clutch solenoid valve terminal Nos. (1) and (3).

Resistance:
Approximately 25Ω

NG → Replace torque converter clutch solenoid valve.

OK ↓

D

CHECK TORQUE CONVERTER CLUTCH SOLENOID VALVE (OPERATION).
1. Remove torque converter clutch solenoid valve. Refer to "ON-VEHICLE SERVICE" in AT section.
2. Check torque converter clutch solenoid valve operation.

NG → Replace torque converter clutch solenoid valve.

OK ↓

(A)
(Go to next page.)

Torque Converter Clutch Solenoid Valve (Cont'd)

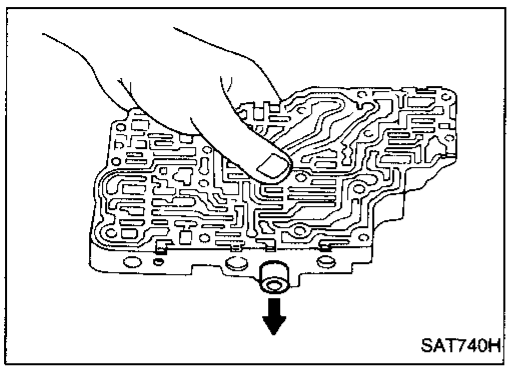

Ⓐ

CHECK CONTROL VALVE.
1. Disassemble control valve assembly. Refer to "REPAIR FOR COMPONENT PARTS" in AT section.
2. Check torque converter clutch control valve.
- Valve, and sleeve slide along valve bore under their own weight.
- Valve, and sleeve are free from burrs, dents and scratches.
- Control valve springs are free from damage, deformation and fatigue.
- Hydraulic line is free from obstacles.

NG → Repair control valve.

OK ↓

Is malfunction eliminated?

No → Check control valve again. Repair or replace control valve assembly.

Yes ↓

INSPECTION END

Overheat

Note: Since this diagnosis does not meet P1900 of SAEJ2012, it is indicated only by CONSULT.

ON BOARD DIAGNOSIS LOGIC

If the cooling fan or another component in the cooling system malfunctions, the engine coolant temperature will rise.
When the engine coolant temperature reaches an abnormally high temperature condition, a malfunction is indicated.

Diagnostic trouble code No.	Malfunction is detected when ...	Check Items (Possible Cause)
OVERHEAT (P1900) 0208	● Engine coolant temperature reaches an abnormally high temperature.	● Cooling fan ● Radiator hose ● Radiator ● Radiator cap ● Water pump ● Thermostat For more information, refer to "MAIN 12 CAUSES OF OVERHEATING", (EC-302).

CAUTION:
When a malfunction is indicated, be sure to replace the coolant following the procedure in the MA section ("Changing Engine Coolant", "ENGINE MAINTENANCE"). Also, replace the engine oil.

a. Fill radiator with coolant up to specified level with a filling speed of 2 liters per minute like pouring coolant by kettle. Be sure to use coolant with the proper mixture ratio. Refer to MA section ("Anti-freeze Coolant Mixture Ratio", "RECOMMENDED FLUIDS AND LUBRICANTS").

b. After refilling coolant, run engine to ensure that no water-flow noise is emitted.

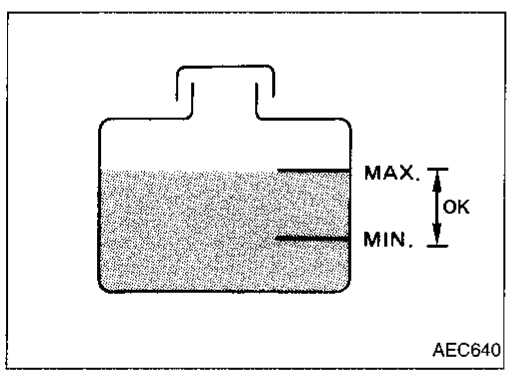

OVERALL FUNCTION CHECK

WARNING:
Never remove the radiator cap when the engine is hot. Serious burns could be caused by high pressure fluid escaping from the radiator.
Wrap a thick cloth around cap. Carefully remove the cap by turning it a quarter turn to allow built-up pressure to escape. Then turn the cap all the way off.

1) Check the coolant level in the reservoir tank and radiator.
   Allow engine to cool before checking coolant level.
   If the coolant level in the reservoir tank and/or radiator is below the proper range, skip the following step and go to "DIAGNOSTIC PROCEDURE" on next page.
2) Confirm whether customer filled the coolant or not. If customer filled the coolant, go to "DIAGNOSTIC PROCEDURE" on next page.

Overheat (Cont'd)

DIAGNOSTIC PROCEDURE

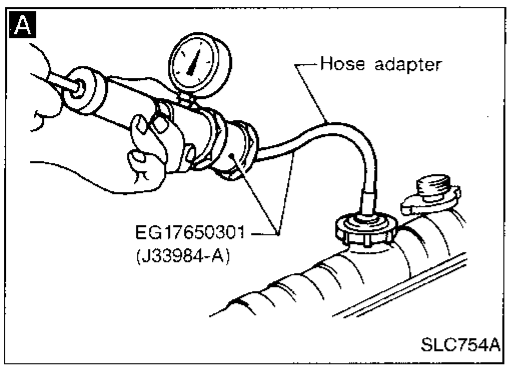

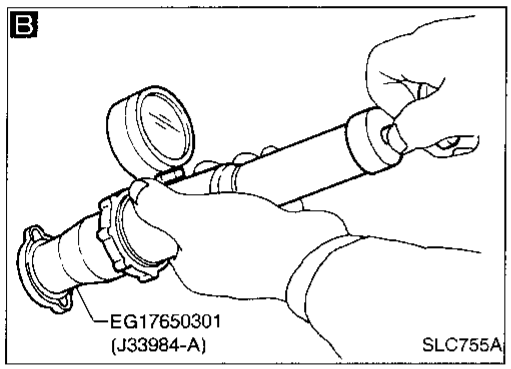

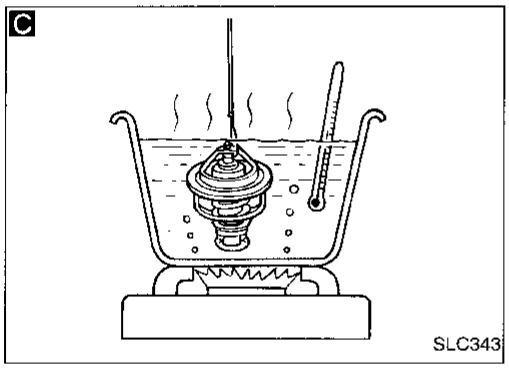

INSPECTION START

↓

A

CHECK COOLING SYSTEM FOR LEAK.
Apply pressure to the cooling system with a tester, and check if the pressure drops.
Testing pressure:
157 kPa (1.6 kg/cm², 23 psi)
Pressure should not drop.
CAUTION:
Higher than the specified pressure may cause radiator damage.

NG → Check the following for leak.
- Hose
- Radiator
- Water pump

Refer to LC section ("Water Pump").

↓ OK

B

CHECK RADIATOR CAP.
Apply pressure to cap with a tester.
Radiator cap relief pressure:
78 - 98 kPa (0.8 - 1.0 kg/cm², 11 - 14 psi)

NG → Replace radiator cap.

↓ OK

C

CHECK THERMOSTAT.
1. Check valve seating condition at normal room temperatures.
   It should seat tightly.
2. Check valve opening temperature and valve lift.
   Valve opening temperature:
   76.5°C (170°F) [standard]
   Valve lift:
   More than 10 mm/90°C (0.39 in/194°F)
3. Check if valve is closed at 5°C (9°F) below valve opening temperature.

For details, refer to LC section ("Thermostat").

NG → Replace thermostat.

↓ OK

Check engine coolant temperature sensor. Refer to "COMPONENT INSPECTION", EC-117.

NG → Replace engine coolant temperature sensor.

↓ OK

If the cause cannot be isolated, go to "MAIN 12 CAUSES OF OVERHEATING" on next page.

↓

INSPECTION END

Perform FINAL CHECK by the following procedure after repair is completed.

1. Warm up engine. Run the vehicle for at least 20 minutes. Pay attention to engine coolant temperature gauge on the instrument panel. If the reading shows an abnormally high temperature, another part may be malfunctioning.
2. Stop vehicle and let engine idle. Check the intake and exhaust systems for leaks by listening for noise or visually inspecting the components.
3. Allow engine to cool and visually check for oil and coolant leaks. Then, perform "OVERALL FUNCTION CHECK".

MAIN 12 CAUSES OF OVERHEATING

Engine	Step	Inspection item	Equipment	Standard	Reference page
OFF	1	● Blocked radiator ● Blocked condenser ● Blocked radiator grille ● Blocked bumper	● Visual	No blocking	—
	2	● Coolant mixture	● Coolant tester	50 - 50% coolant mixture	See "RECOMMENDED FLUIDS AND LUBRICANTS" in MA section
	3	● Coolant level	● Visual	Coolant up to MAX level in reservoir tank and radiator filler neck	See "Changing Engine Coolant", "ENGINE MAINTENANCE" in MA section
	4	● Radiator cap	● Pressure tester	78 - 98 kPa (0.8 - 1.0 kg/cm^2, 11 - 14 psi) 59 - 98 kPa (0.6 - 1.0 kg/cm^2, 9 - 14 psi) (Limit)	See "System Check" "ENGINE COOLING SYSTEM" in LC section
ON*2	5	● Coolant leaks	● Visual	No leaks	See "System Check" "ENGINE COOLING SYSTEM" in LC section
ON*2	6	● Thermostat	● Touch the upper and lower radiator hoses	Both hoses should be hot	See "Thermostat" and "Radiator", "ENGINE COOLING SYSTEM" in LC section
ON*1	7	● Cooling fan	● Visual	Operating	See "Cooling Fan" "ENGINE COOLING SYSTEM" in LC section.
OFF	8	● Combustion gas leak	● Color checker chemical tester 4 gas analyzer	Negative	—
ON*3	9	● Coolant temperature gauge	● Visual	Gauge less than 3/4 when driving	—
		● Coolant overflow to reservoir tank	● Visual	No overflow during driving and idling	See "Changing Engine Coolant", "ENGINE MAINTENANCE" in MA section
OFF*4	10	● Coolant return from reservoir tank to radiator	● Visual	Should be initial level in reservoir tank	See "ENGINE MAINTENANCE" in MA section
OFF	11	● Cylinder head	● Straight gauge feeler gauge	0.1 mm (0.004 in) Maximum distortion (warping)	See "Inspection", "CYLINDER HEAD" in EM section
	12	● Cylinder block and pistons	● Visual	No scuffing on cylinder walls or piston	See "Inspection", "CYLINDER BLOCK" in EM section

*1: Turn the ignition switch ON.
*2: Engine running at 3,000 rpm for 10 minutes.
*3: Drive at 90 km/h (55 MPH) for 30 minutes and then let idle for 10 minutes.
*4: After 60 minutes of cool down time.
For more information, refer to "OVERHEATING CAUSE ANALYSIS" in LC section.

Injector

EC-INJECT-01

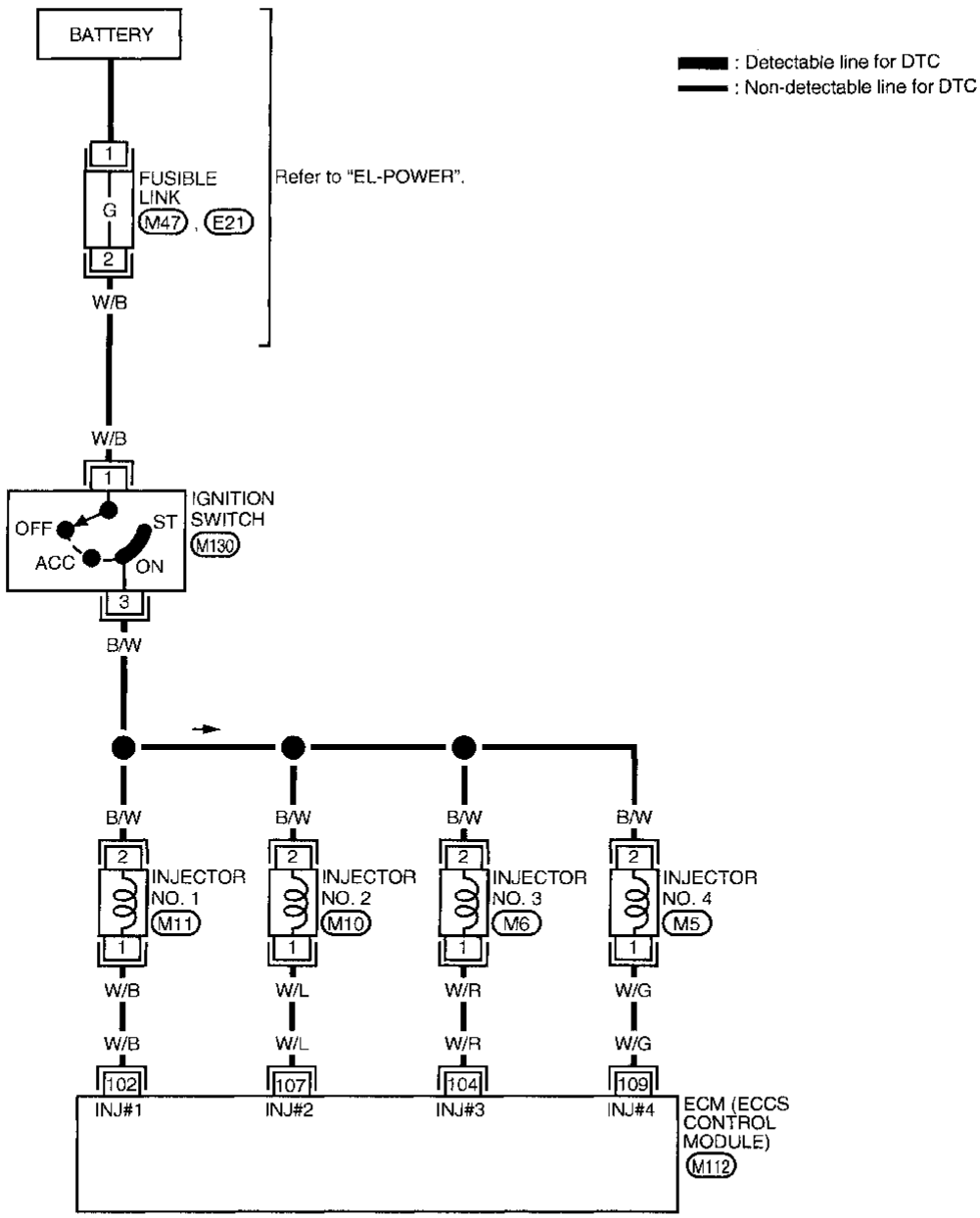

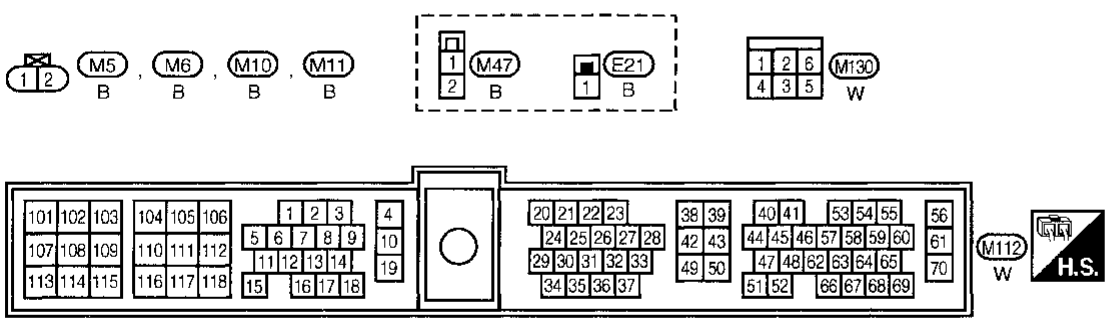

AEC068A

Injector (Cont'd)

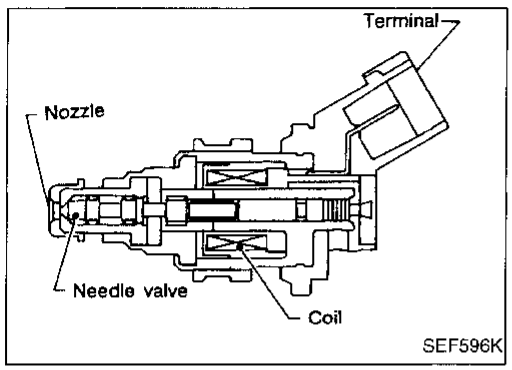

COMPONENT DESCRIPTION

The fuel injector is a small, precise solenoid valve. When the ECM supplies a ground to the injector circuit, the coil in the injector is energized. The energized coil pulls the needle valve back and allows fuel to flow through the injector into the intake manifold. The amount of fuel injected depends upon the injection pulse duration. Pulse duration is the length of time the injector remains open. The ECM controls the injection pulse duration based on engine fuel needs.

ECM TERMINALS AND REFERENCE VALUE

Specification data are reference values and are measured between each terminal and ㊸ (ECCS ground).

TERMINAL NO.	WIRE COLOR	ITEM	CONDITION	DATA (DC voltage)
102	W/B	Injector No. 1	Engine is running.	BATTERY VOLTAGE (11 - 14V)
104	W/R	Injector No. 3		
107	W/L	Injector No. 2		
109	W/G	Injector No. 4		

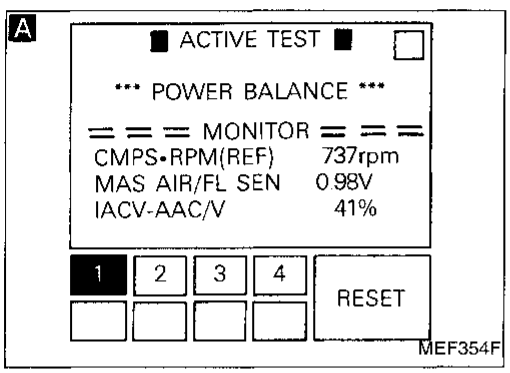

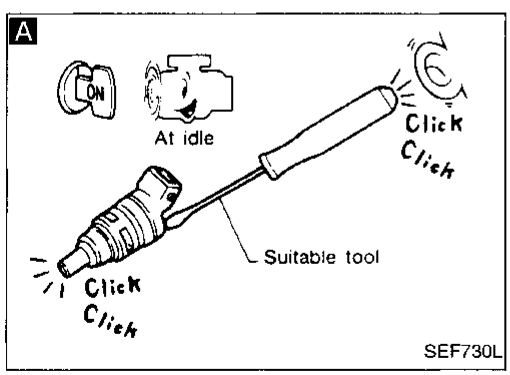

DIAGNOSTIC PROCEDURE

INSPECTION START

↓

A

CHECK OVERALL FUNCTION.

1. Start engine.
2. Perform "POWER BALANCE" in "ACTIVE TEST" mode with CONSULT.
3. Make sure that each circuit produces a momentary engine speed drop.

OR

2. Listen to each injector operating sound.
Clicking noise should be heard.

OK → INSPECTION END

↓ NG

Ⓐ

(Go to next page.)

Injector (Cont'd)

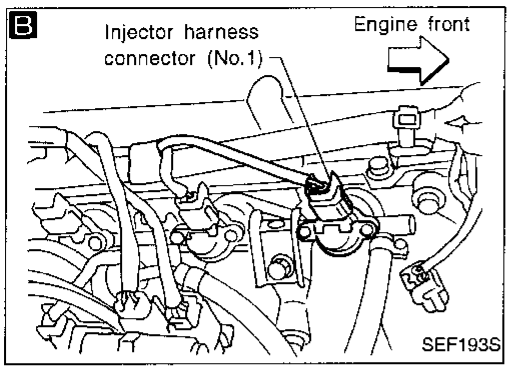

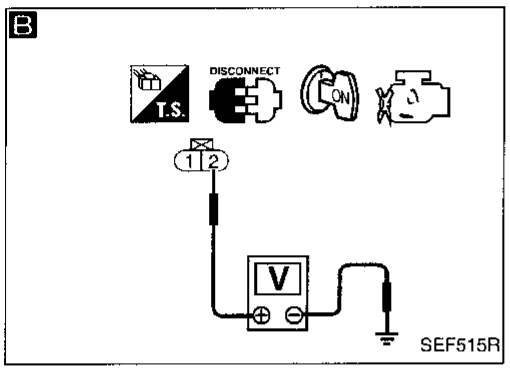

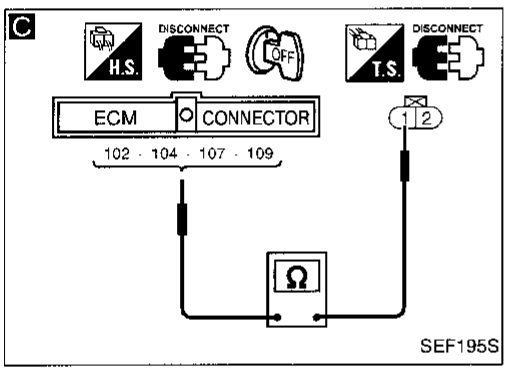

Ⓐ

B

CHECK POWER SUPPLY.
1. Stop engine.
2. Disconnect injector harness connector.
3. Turn ignition switch "ON".
4. Check voltage between terminal ② and ground with CONSULT or tester.
   Voltage: Battery voltage

NG → Repair harness or connectors.

OK ↓

C

CHECK OUTPUT SIGNAL CIRCUIT.
1. Turn ignition switch "OFF".
2. Disconnect ECM harness connector.
3. Check harness continuity between terminal ① and ECM terminals (102), (104), (107), (109).
   Continuity should exist.
   If OK, check harness for short.

NG → Repair harness or connectors.

OK ↓

CHECK COMPONENT (Injector).
Refer to "COMPONENT INSPECTION" below.

NG → Replace injector.

OK ↓

Disconnect and reconnect harness connectors in the circuit. Then retest.

Trouble is not fixed. ↓

Check ECM pin terminals for damage and check the connection of ECM harness connector. Reconnect ECM harness connector and retest.

↓

INSPECTION END

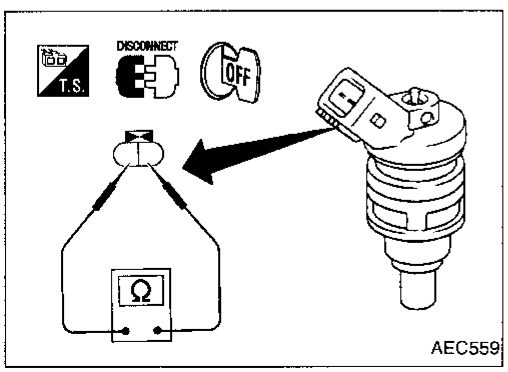

COMPONENT INSPECTION

Injector

1. Disconnect injector harness connector.
2. Check resistance between terminals as shown in the figure.
   Resistance: 10 - 14Ω at 25°C (77°F)
   If NG, replace injector.

Start Signal

EC-S/SIG-01

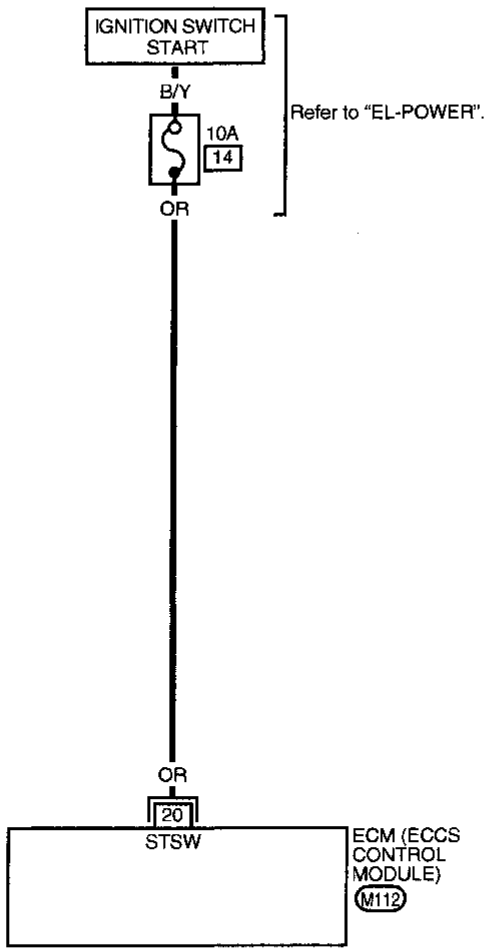

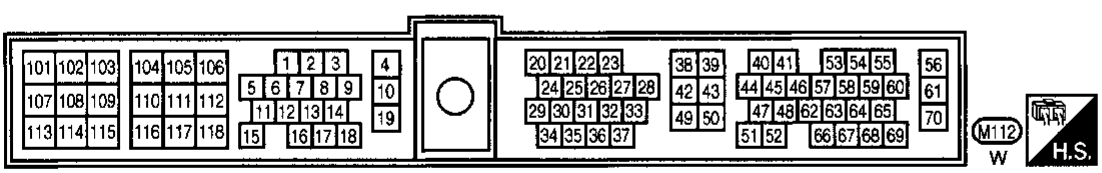

AEC069A

Start Signal (Cont'd)

SYSTEM DESCRIPTION

If the ECM always receives a start signal, the ECM will judge the start signal "OFF" when engine speed is above 1,000 rpm. This prevents extra enrichment. After the engine speed is below 200 rpm, start-up enrichment will be allowed until the engine speed reaches 1,000 rpm.

ECM TERMINALS AND REFERENCE VALUE

Specification data are reference values and are measured between each terminal and ㊸ (ECCS ground).

TERMINAL NO.	WIRE COLOR	ITEM	CONDITION	DATA (DC voltage)
20	OR	Start signal	Ignition switch "ON"	Approximately 0V
			Ignition switch "START"	BATTERY VOLTAGE (11 - 14V)

CONSULT REFERENCE VALUE IN DATA MONITOR MODE

Specification data are reference values.

MONITOR ITEM	CONDITION	SPECIFICATION
START SIGNAL	● Ignition switch: ON → START → ON	OFF → ON → OFF

Start Signal (Cont'd)

DIAGNOSTIC PROCEDURE

A

■ START SIGNAL CKT ■

1. CLOSE THROTTLE, SHIFT TO P OR N RANGE.
2. TOUCH START AND START ENGINE IMMEDIATELY.

NEXT | START

SEF191L

A

☆ MONITOR ☆ NO FAIL

START SIGNAL	OFF
CLSD TH/P SW	ON
AIR COND SIG	OFF
P/N POSI SW	ON

RECORD

SEF111P

A

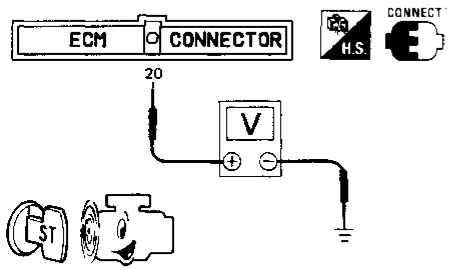

SEF109P

INSPECTION START

A

CHECK OVERALL FUNCTION.

1. Turn ignition switch "ON".
2. Perform "START SIGNAL CKT" in "FUNCTION TEST" mode with CONSULT.

OR

1. Turn ignition switch "ON".
2. Check "START SIGNAL" in "DATA MONITOR" mode with CONSULT.

IGN "ON"	OFF
IGN "START"	ON

OR

1. Turn ignition switch to "START".
2. Check voltage between ECM terminal 20 and ground.

Voltage:
Ignition switch "START"
Battery voltage
Except above
Approximately 0V

OK → INSPECTION END

NG ↓

Check the following.
- 10A fuse
- Harness for open or short between ECM and ignition switch

If NG, repair harness or connectors.

↓

Disconnect and reconnect harness connectors in the circuit. Then retest.

↓ Trouble is not fixed.

Check ECM pin terminals for damage and check the connection of ECM harness connector. Reconnect ECM harness connector and retest.

↓

INSPECTION END

Fuel Pump

SYSTEM DESCRIPTION

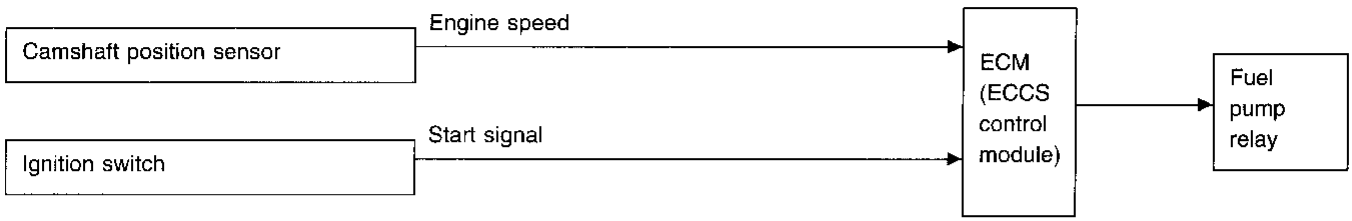

The ECM activates the fuel pump for several seconds after the ignition switch is turned on to improve engine startability. If the ECM receives a 180° signal from the camshaft position sensor, it knows that the engine is rotating, and causes the pump to perform. If the 180° signal is not received when the ignition switch is on, the engine stalls. The ECM stops pump operation and prevents battery discharging, thereby improving safety. The ECM does not directly drive the fuel pump. It controls the ON/OFF fuel pump relay, which in turn controls the fuel pump.

Condition	Fuel pump operation
Ignition switch is turned to ON.	Operates for 5 seconds
Engine running and cranking	Operates
When engine is stopped	Stops in 1 second
Except as shown above	Stops

ECM TERMINALS AND REFERENCE VALUE

Specification data are reference values and are measured between each terminal and ㊸ (ECCS ground).

TERMINAL NO.	WIRE COLOR	ITEM	CONDITION	DATA (DC voltage)
8	W/R	Fuel pump relay	Ignition switch "ON" └ For 5 seconds after turning ignition switch "ON" Engine is running.	Approximately 1V
			Ignition switch "ON" └ 5 seconds after turning ignition switch "ON"	BATTERY VOLTAGE (11 - 14V)

CONSULT REFERENCE VALUE IN DATA MONITOR MODE

Specification data are reference values

MONITOR ITEM	CONDITION	SPECIFICATION
FUEL PUMP RLY	● Ignition switch is turned to ON (Operates for 5 seconds) ● Engine running and cranking ● When engine is stopped (Stops in 1.0 seconds)	ON
	● Except as shown above	OFF

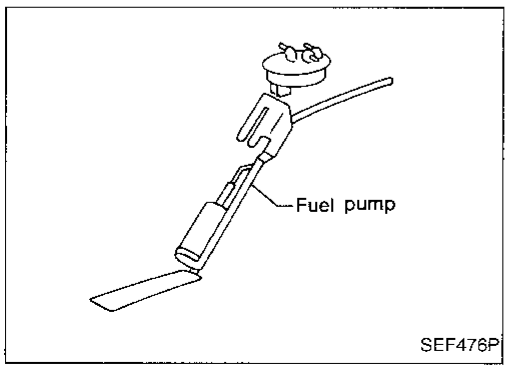

COMPONENT DESCRIPTION

The fuel pump with a fuel damper is an in-tank type (the pump and damper are located in the fuel tank).

Fuel Pump (Cont'd)

EC-F/PUMP-01

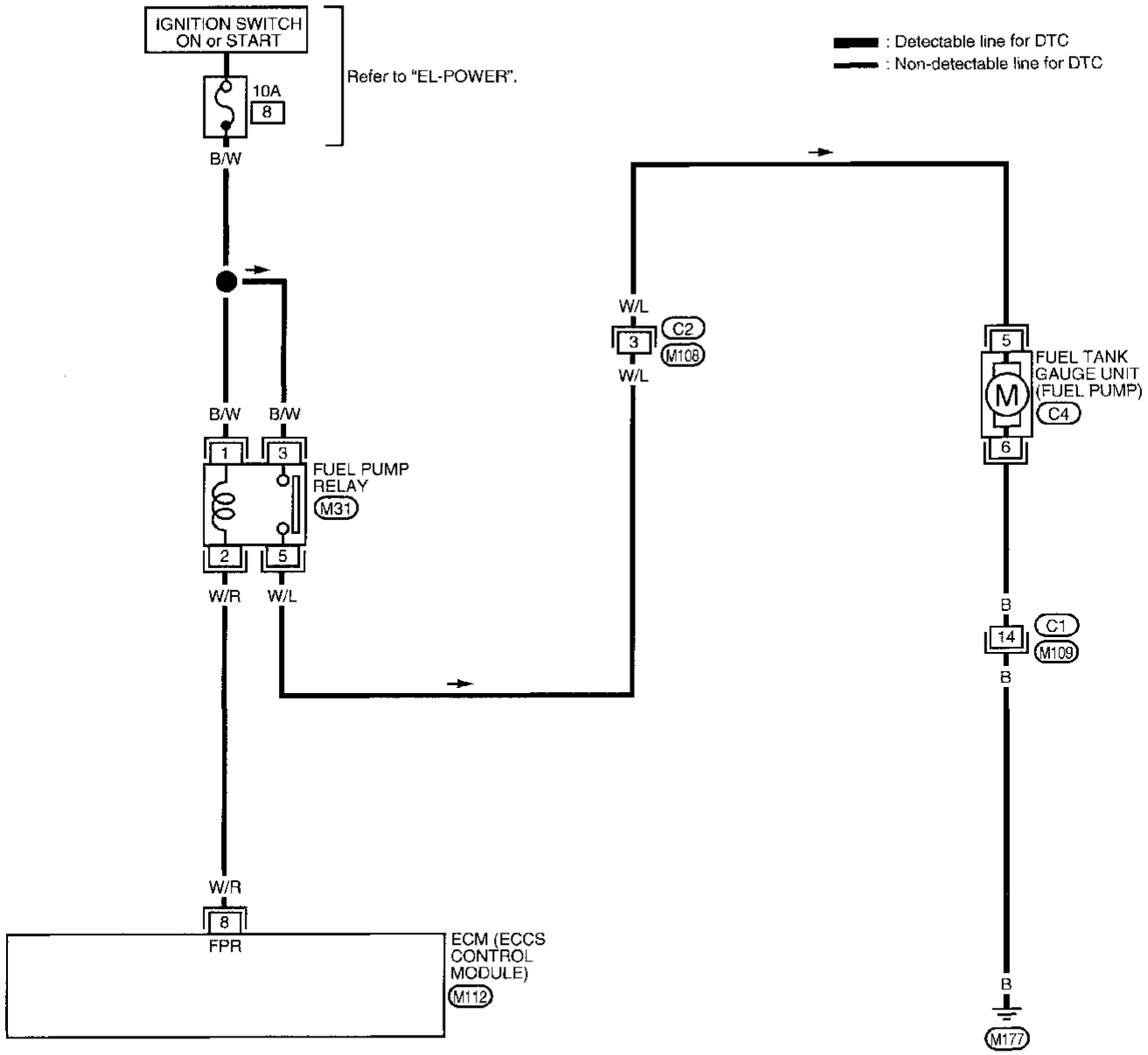

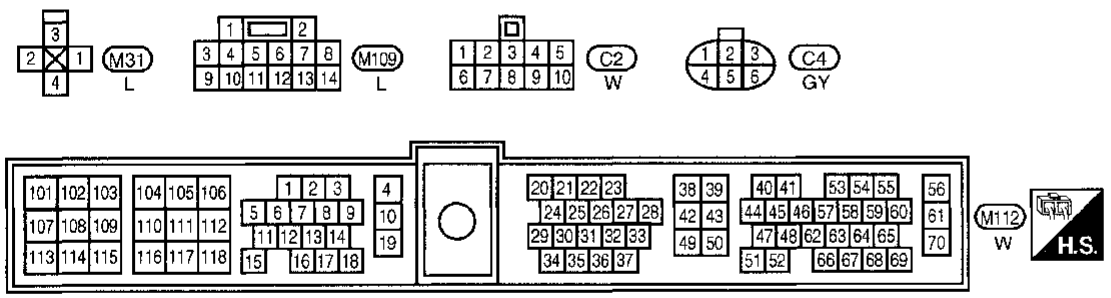

AEC340A

Fuel Pump (Cont'd)

DIAGNOSTIC PROCEDURE

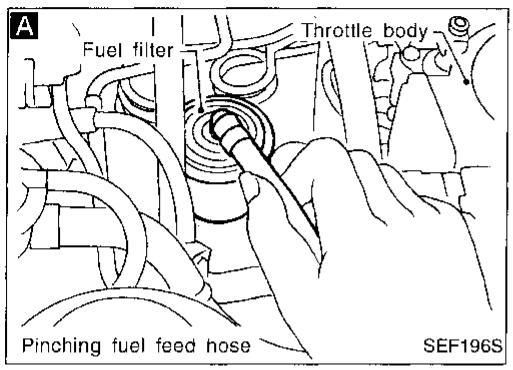

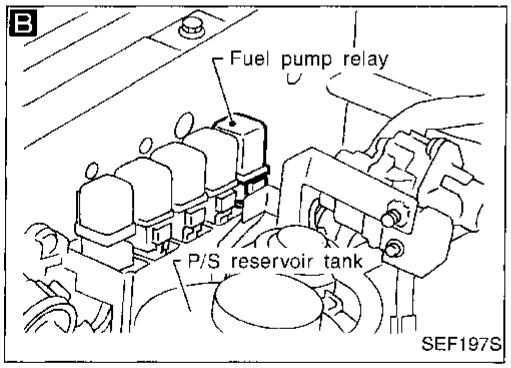

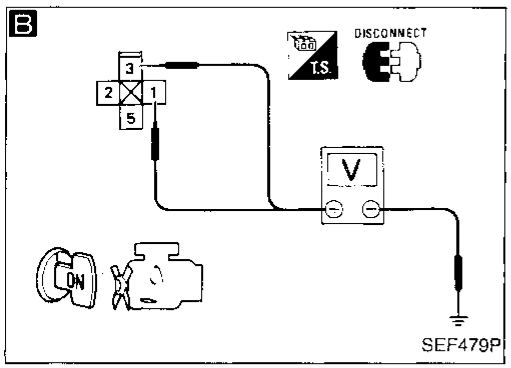

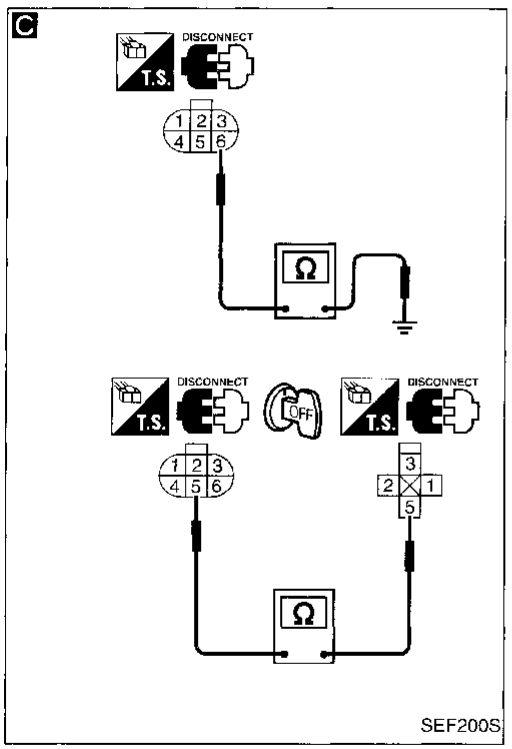

INSPECTION START

A

CHECK OVERALL FUNCTION.
1. Turn ignition switch "ON".
2. Pinch fuel feed hose with fingers.
   Fuel pressure pulsation should be felt on the fuel feed hose for 5 seconds after ignition switch is turned "ON".

OK → INSPECTION END

NG ↓

B

CHECK POWER SUPPLY.
1. Turn ignition switch "OFF".
2. Disconnect fuel pump relay.
3. Turn ignition switch "ON".
4. Check voltage between terminals ①, ③ and ground with CONSULT or tester.
   Voltage: Battery voltage

NG → Check the following.
- 10A fuse
- Harness for open or short between fuse and fuel pump relay

If NG, repair harness or connectors.

OK ↓

C

CHECK GROUND CIRCUIT.
1. Turn ignition switch "OFF".
2. Disconnect fuel pump harness connector.
3. Check harness continuity between terminal ⑥ and body ground, relay terminal ⑤ and terminal ⑤.
   Continuity should exist.
   If OK, check harness for short.

NG → Check the following.
- Harness connectors (C1), (M109)
- Harness connectors (C2), (M108)
- Harness for open or short between fuel pump and body ground
- Harness for open or short between fuel pump and fuel pump relay

If NG, repair harness or connectors.

OK ↓

D

CHECK OUTPUT SIGNAL CIRCUIT.
1. Disconnect ECM harness connector.
2. Check harness continuity between ECM terminal ⑧ and terminal ②.
   Continuity should exist.
   If OK, check harness for short.

NG → Repair harness or connectors.

OK ↓

Ⓐ
(Go to next page.)

Fuel Pump (Cont'd)

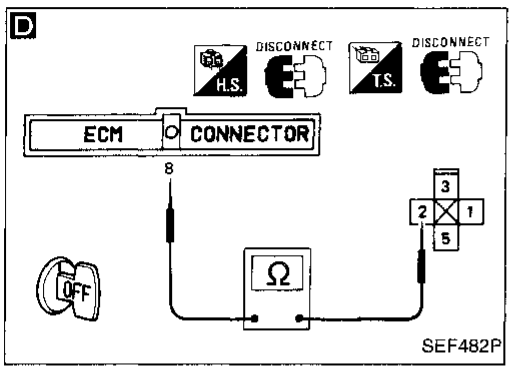

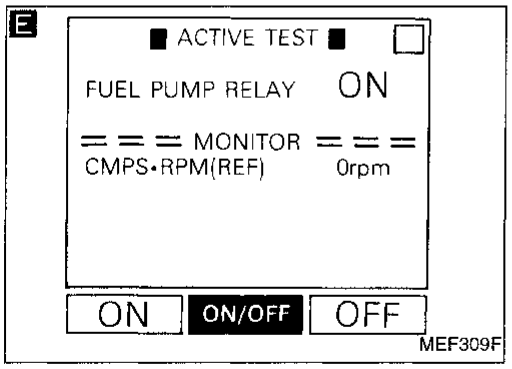

Ⓐ

E

CHECK COMPONENT
(Fuel pump relay).
1. Reconnect fuel pump relay, fuel pump harness connector and ECM harness connector.
2. Turn ignition switch "ON".
3. Turn fuel pump relay "ON" and "OFF" in "ACTIVE TEST" mode with CONSULT and check operating sound.

— OR —

Refer to "COMPONENT INSPECTION" below.

NG → Replace fuel pump relay.

OK ↓

CHECK COMPONENT
(Fuel pump).
Refer to "COMPONENT INSPECTION" below.

NG → Replace fuel pump.

OK ↓

Disconnect and reconnect harness connectors in the circuit. Then retest.

Trouble is not fixed. ↓

Check ECM pin terminals for damage and check the connection of ECM harness connector. Reconnect ECM harness connector and retest.

↓

INSPECTION END

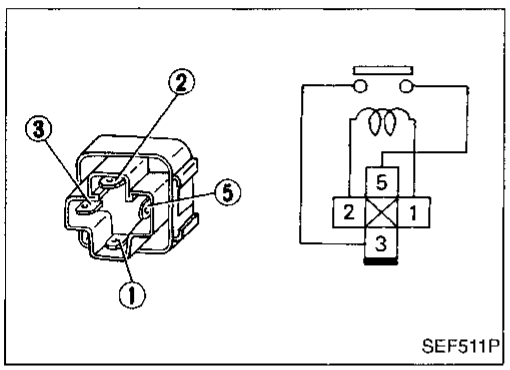

COMPONENT INSPECTION

Fuel pump relay

Check continuity between terminals ③ and ⑤.

Conditions	Continuity
12V direct current supply between terminals ① and ②	Yes
No current supply	No

If NG, replace relay.

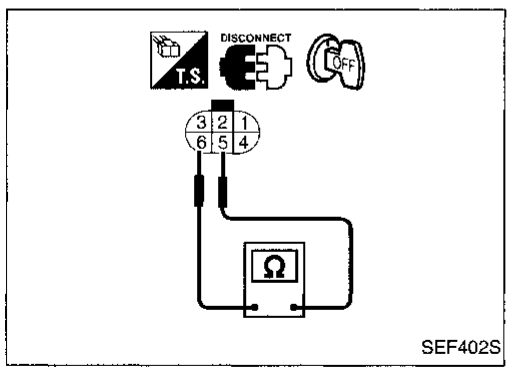

Fuel pump

1. Disconnect fuel pump harness connector.
2. Check resistance between terminals ⑤ and ⑥.
   Resistance: 0.2 - 5.0Ω at 25°C (77°F)
   If NG, replace fuel pump.

Power Steering Oil Pressure Switch

EC-PST/SW-01

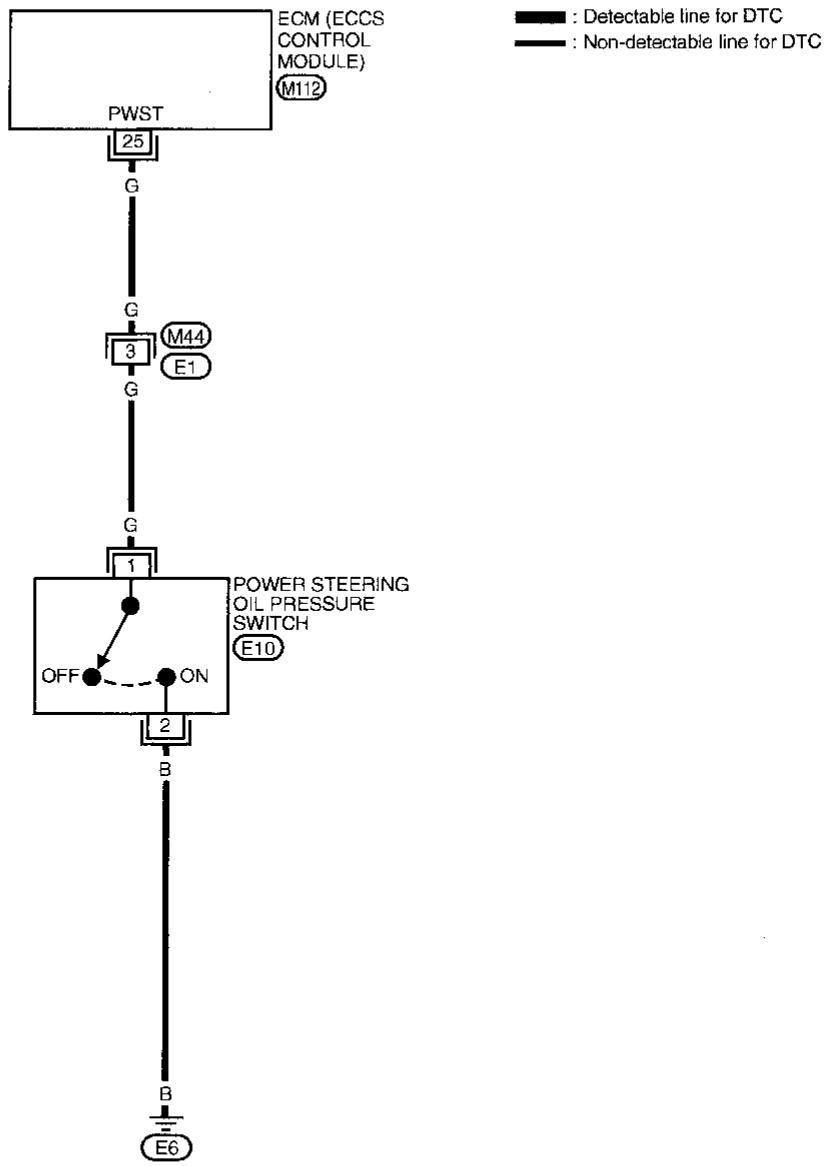

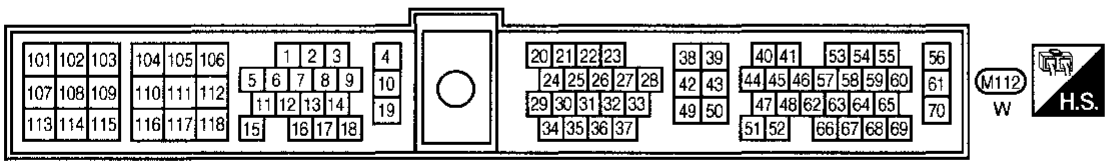

AEC071A

Power Steering Oil Pressure Switch (Cont'd)

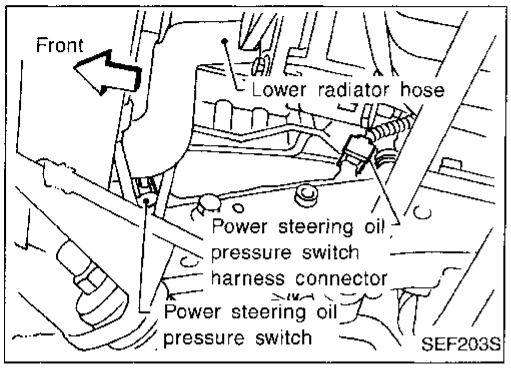

COMPONENT DESCRIPTION

The power steering oil pressure switch is attached to the power steering high-pressure tube and detects a power steering load. When a power steering load is detected, it signals the ECM. The ECM adjusts the IACV-AAC valve to increase the idle speed and adjust for the increased load.

ECM TERMINALS AND REFERENCE VALUE

Specification data are reference values and are measured between each terminal and ㊸ (ECCS ground).

TERMINAL NO.	WIRE COLOR	ITEM	CONDITION	DATA (DC voltage)
25	G	Power steering oil pressure switch	Engine is running. └ Steering wheel is being turned.	0V
			Engine is running. └ Steering wheel is not being turned.	Approximately 5V

CONSULT REFERENCE VALUE IN DATA MONITOR MODE

Specification data are reference values

MONITOR ITEM	CONDITION		SPECIFICATION
PW/ST SIGNAL	● Engine: After warming up, idle the engine	Steering wheel in neutral position (forward direction)	OFF
		The steering wheel is turned	ON

Power Steering Oil Pressure Switch (Cont'd)

DIAGNOSTIC PROCEDURE

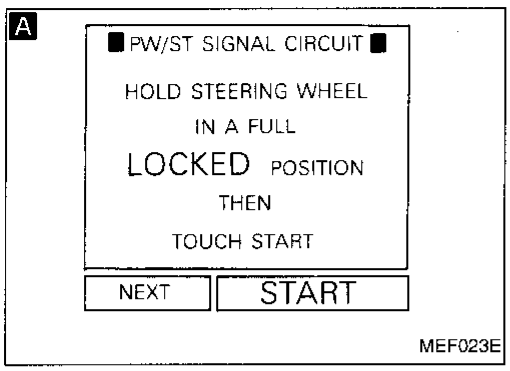

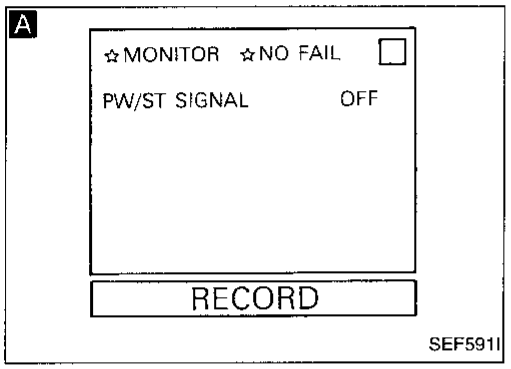

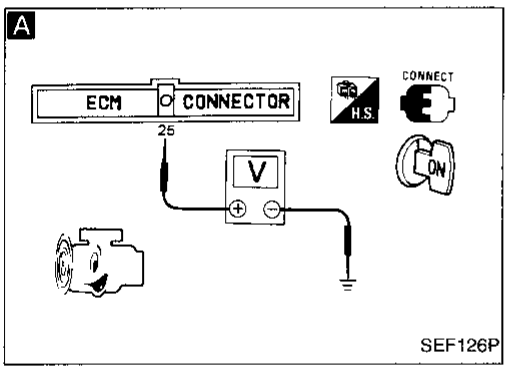

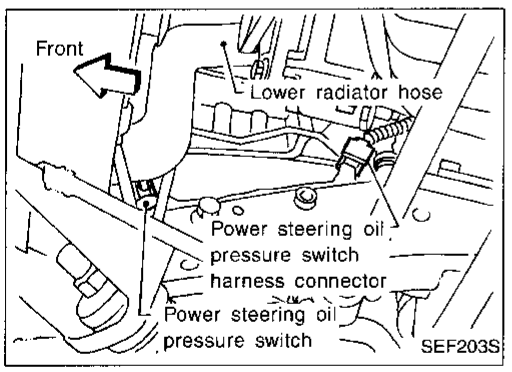

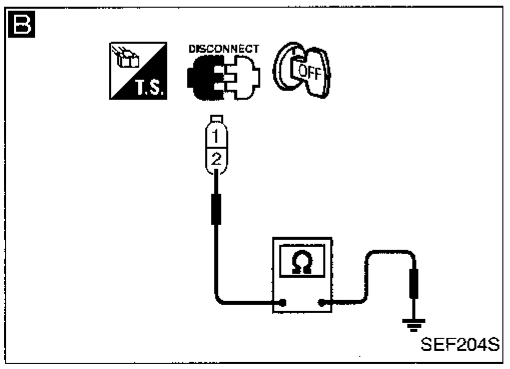

INSPECTION START

A

CHECK OVERALL FUNCTION.

1. Turn ignition switch "ON".
2. Perform "PW/ST SIGNAL CIRCUIT" in "FUNCTION TEST" mode with CONSULT.

OR

1. Start engine.
2. Check "PW/ST SIGNAL" in "DATA MONITOR" mode with CONSULT.

Steering is neutral position: OFF
Steering is turned: ON

OR

1. Start engine.
2. Check voltage between ECM terminal 25 and ground.

Voltage:
When steering wheel is turned quickly.
Approximately 0V
Except above
Approximately 5V

OK → INSPECTION END

NG ↓

B

CHECK GROUND CIRCUIT.

1. Turn ignition switch "OFF".
2. Disconnect power steering oil pressure switch harness connector.
3. Check harness continuity between terminal 2 and engine ground.

Continuity should exist.
If OK, check harness for short.

NG → Repair harness or connectors.

OK ↓

Ⓐ
(Go to next page.)

Power Steering Oil Pressure Switch (Cont'd)

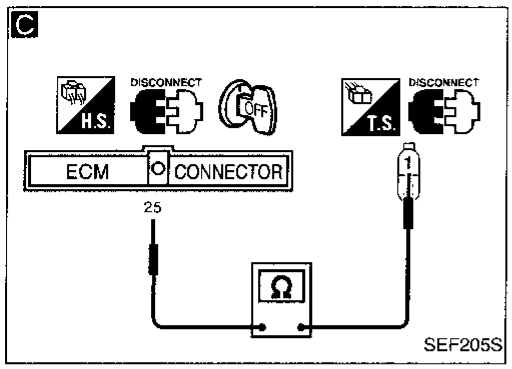

Ⓐ

C

CHECK INPUT SIGNAL CIRCUIT.
1. Disconnect ECM harness connector.
2. Check harness continuity between ECM terminal ㉕ and terminal ①.
Continuity should exist.
If OK, check harness for short.

NG → Check the following.
- Harness connectors (E1), (M44)
- Harness for open or short between ECM and power steering oil pressure switch

If NG, repair harness or connectors.

OK ↓

CHECK COMPONENT
(Power steering oil pressure switch).
Refer to "COMPONENT INSPECTION" below.

NG → Replace power steering oil pressure switch.

OK ↓

Disconnect and reconnect harness connectors in the circuit. Then retest.

Trouble is not fixed. ↓

Check ECM pin terminals for damage and check the connection of ECM harness connector. Reconnect ECM harness connector and retest.

↓

INSPECTION END

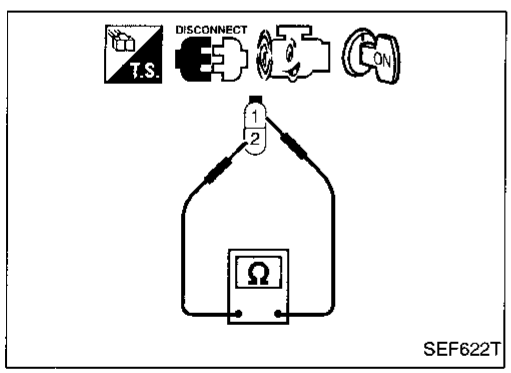

COMPONENT INSPECTION

Power steering oil pressure switch

1. Disconnect power steering oil pressure switch harness connector then start engine.
2. Check continuity between terminals ① and ②.

Conditions	Continuity
Steering wheel is being turned	Yes
Steering wheel is not being turned	No

If NG, replace power steering oil pressure switch.

IACV-FICD Solenoid Valve

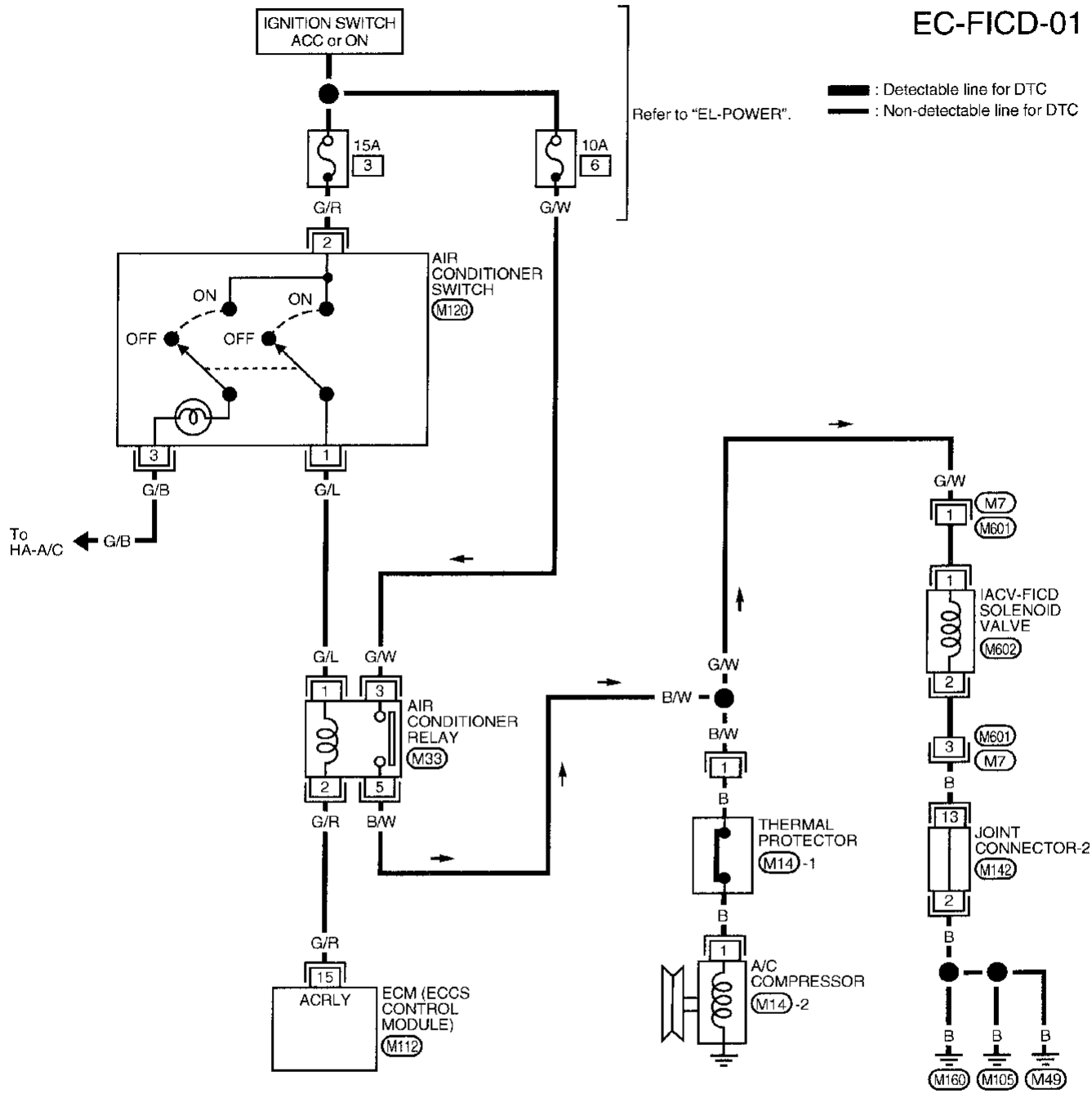

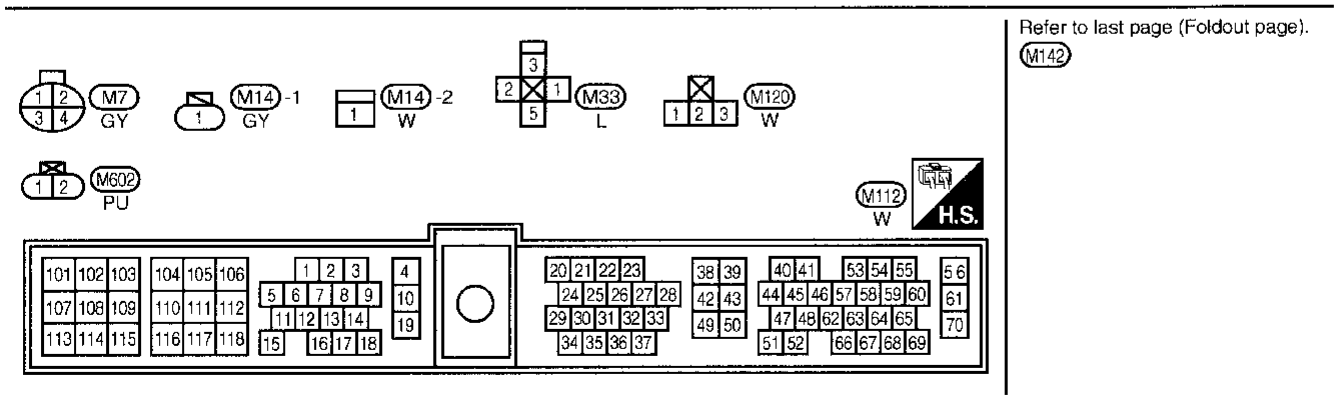

Refer to last page (Foldout page).
M142

AEC319A

IACV-FICD Solenoid Valve (Cont'd)

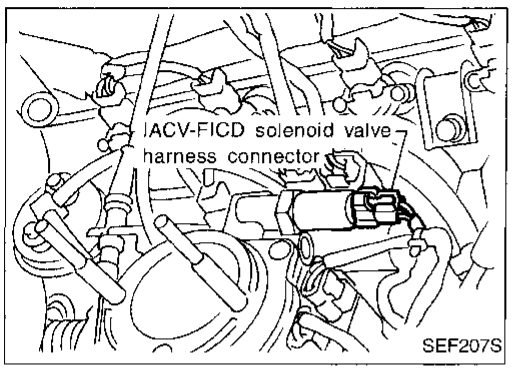

COMPONENT DESCRIPTION

The idle air adjusting (IAA) unit is made up of the IACV-AAC valve, IACV-FICD solenoid valve and idle adjusting screw. It receives the signal from the ECM and controls the idle speed at the preset value.

ECM TERMINALS AND REFERENCE VALUE

Specification data are reference values and are measured between each terminal and ㊸ (ECCS ground).

TERMINAL NO.	WIRE COLOR	ITEM	CONDITION	DATA (DC voltage)
15	G/R	Air conditioner relay	Engine is running. └ Both air conditioner switch and blower switch are "ON".	Approximately 1V
			Engine is running. └ Air conditioner switch is "OFF".	BATTERY VOLTAGE (11 - 14V)
21	G/R	Air conditioner switch	Engine is running. └ Both air conditioner switch and blower switch are "ON". (Compressor operates)	Approximately 0V
			Engine is running. └ Air conditioner switch is "OFF".	BATTERY VOLTAGE (11 - 14V)

IACV-FICD Solenoid Valve (Cont'd)

DIAGNOSTIC PROCEDURE

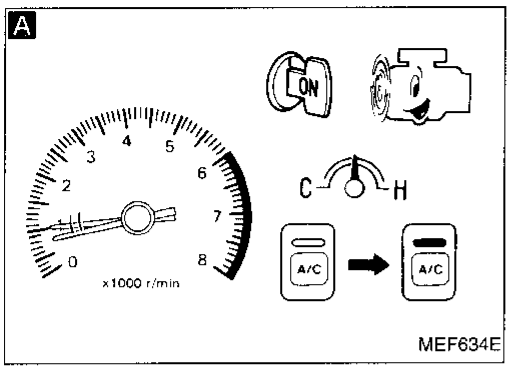

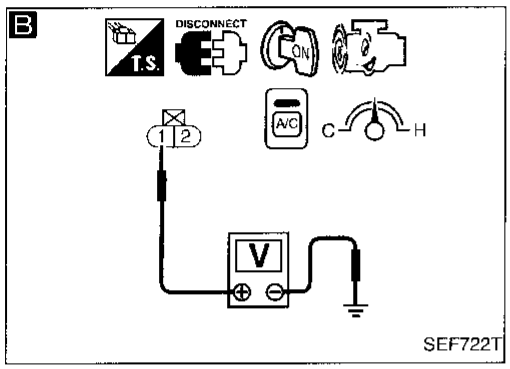

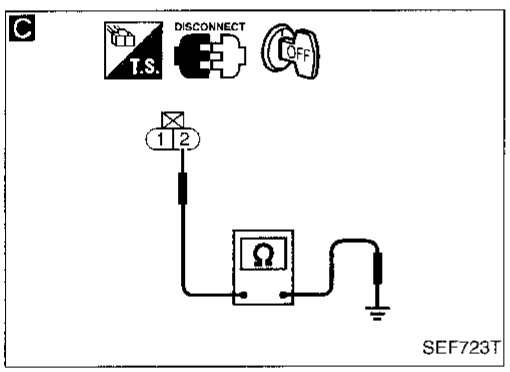

INSPECTION START

A

CHECK OVERALL FUNCTION.
1. Start engine and warm it up sufficiently.
2. Check idle speed.
   M/T: 800±50 rpm
   A/T: 800±50 rpm (in "N" position)
   If NG, adjust idle speed.
3. Turn air conditioner switch and blower fan switch "ON".
4. Recheck idle speed.
   M/T: 900 rpm or more
   A/T: 900 rpm or more (in "N" position)

OK → INSPECTION END

NG ↓

Check if air conditioner compressor functions normally.

NG → Refer to HA section.

OK ↓

B

CHECK POWER SUPPLY.
1. Stop engine.
2. Disconnect IACV-FICD solenoid valve harness connector.
3. Restart engine and turn air conditioner switch and blower fan switch "ON".
4. Check voltage between terminal ① and ground with CONSULT or tester.
   Voltage: Battery voltage

NG → Check the following.
- Harness connectors, (M7), (M601)
- Harness for open or short between IACV-FICD solenoid valve and air conditioner relay

If NG, repair harness or connectors.

OK ↓

C

CHECK GROUND CIRCUIT.
1. Turn ignition switch "OFF".
2. Check harness continuity between terminal ② and body ground.
   Continuity should exist.
   If OK, check harness for short.

NG → Check the following.
- Harness connectors, (M7), (M601)
- Joint connector-2
- Harness for open or short between IACV-FICD solenoid valve and body ground

If NG, repair harness or connectors.

OK ↓

CHECK COMPONENT
(IACV-FICD solenoid valve).
Refer to "COMPONENT INSPECTION" on next page.

NG → Replace IACV-FICD solenoid valve.

OK ↓

Ⓐ

(Go to next page.)

IACV-FICD Solenoid Valve (Cont'd)

Ⓐ

↓

Disconnect and reconnect harness connectors in the circuit. Then retest.

↓ Trouble is not fixed.

Check ECM pin terminals for damage and check the connection of ECM harness connector. Reconnect ECM harness connector. Then retest.

↓

INSPECTION END

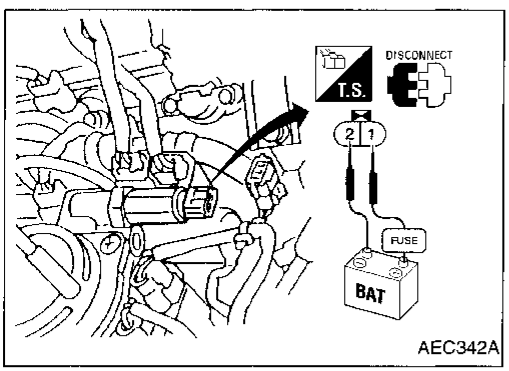

AEC342A

COMPONENT INSPECTION

IACV-FICD solenoid valve

Disconnect IACV-FICD solenoid valve harness connector.

- Check for clicking sound when applying 12V direct current to terminals.

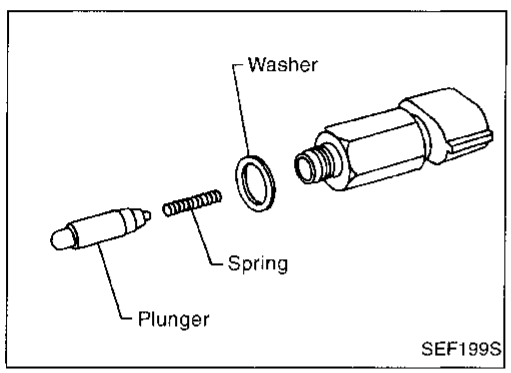

SEF199S

- Check plunger for seizing or sticking.
- Check for broken spring.

MIL & Data Link Connectors

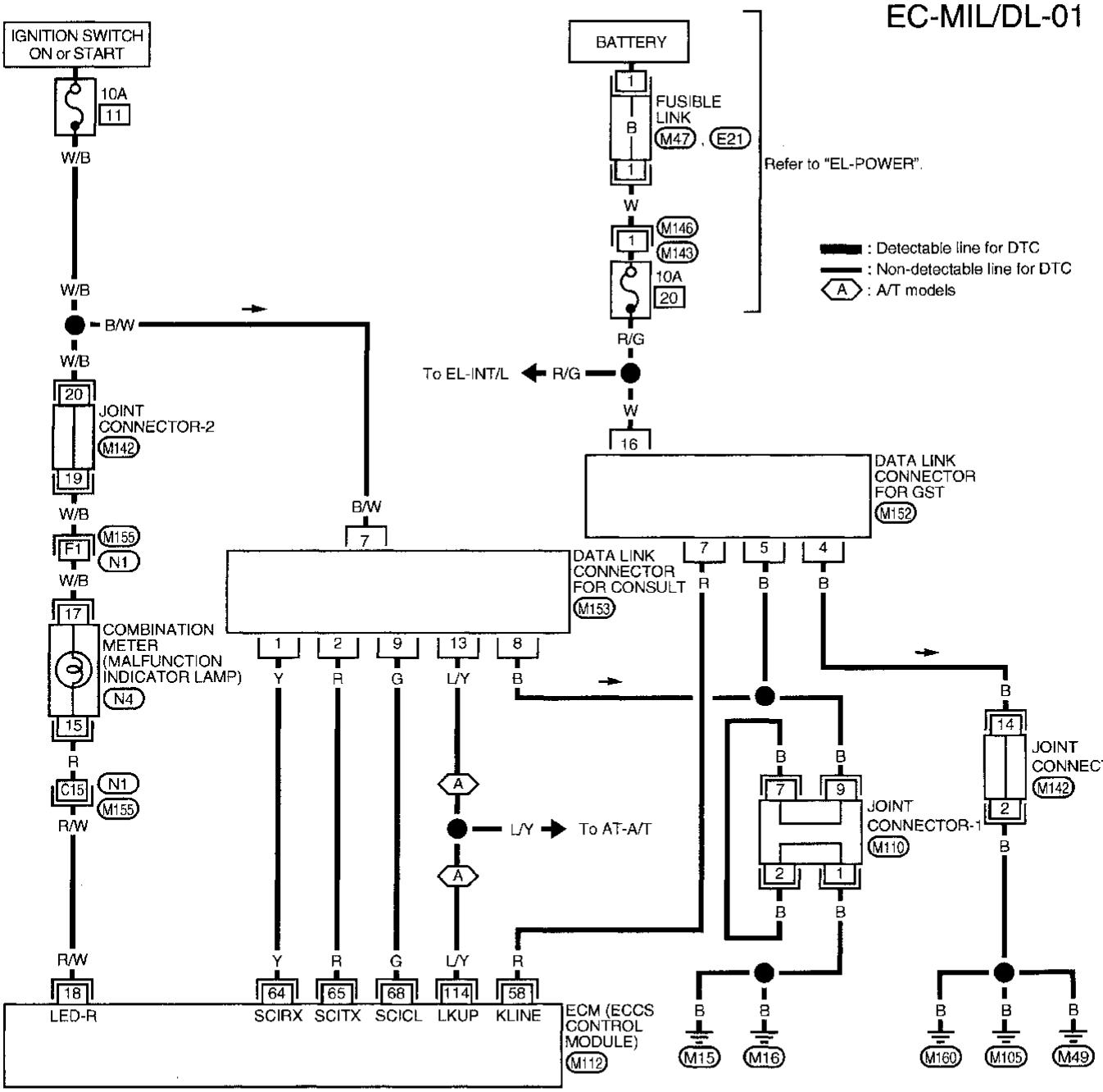

AEC321A

ECM TERMINALS AND REFERENCE VALUE

Specification data are reference values and are measured between each terminal and ㊸ (ECCS ground).

TERMINAL NO.	WIRE COLOR	ITEM	CONDITION	DATA (DC Voltage)
18	R/W	Malfunction indicator lamp	Ignition switch "ON"	0 - 1V
			Engine is running. └ Idle speed	BATTERY VOLTAGE (11 - 14V)
58	R	Data link connector for GST	Engine is running. └ Idle speed (GST is disconnected.)	Approximately 9V
64	Y	Data link connector for CONSULT	Engine is running. └ Idle speed (Connect CONSULT and select DATA MONITOR mode.)	Approximately 0.1V
65	R			Approximately 4 - 9V
68	G			Approximately 3.5V*

*: Average voltage for pulse signal (Actual pulse signal can be confirmed by oscilloscope.)

General Specifications

PRESSURE REGULATOR	
Fuel pressure at idling kPa (kg/cm², psi)	
Vacuum hose is connected	Approximately 235 (2.4, 34)
Vacuum hose is disconnected	Approximately 294 (3.0, 43)

Inspection and Adjustment

Idle speed*1 rpm	
No-load*2 (in "N" position)	800±50
Air conditioner: ON (in "N" position)	900 or more
Ignition timing	10°±2° BTDC
Throttle position touch speed rpm	1,000±150

*1: Feedback controlled and needs no adjustments
*2: Under the following conditions:
- Air conditioner switch: OFF
- Steering wheel: Kept in straight-ahead position
- Electrical load: OFF (Lights, heater fan & rear window defogger)

IGNITION COIL

Primary voltage V	Battery voltage (11 - 14)
Primary resistance [at 25°C (77°F)] Ω	Less than 1.0
Secondary resistance [at 25°C (77°F)] kΩ	7 - 13

MASS AIR FLOW SENSOR

Supply voltage V	Battery voltage (11 - 14)
Output voltage at idle V	1.3 - 1.7
Mass air flow (Using CONSULT or GST) g·m/sec	1.8 - 6.5 at idle* (2WD) 2.1 - 6.0 at idle* (4WD) 7.7 - 15.0 at 2,500 rpm* (2WD) 6.8 - 13.3 at 2,500 rpm* (4WD)

*: Engine is warmed up sufficiently and running under no-load.

ENGINE COOLANT TEMPERATURE SENSOR

Temperature °C (°F)	Resistance
20 (68)	2.1 - 2.9 kΩ
50 (122)	0.68 - 1.00 kΩ
90 (194)	0.236 - 0.260 kΩ

EGR TEMPERATURE SENSOR

EGR temperature °C (°F)	Voltage (V)	Resistance (MΩ)
0 (32)	4.81	7.9 - 9.7
50 (122)	2.82	0.57 - 0.70
100 (212)	0.8	0.08 - 0.10

FUEL PUMP

Resistance [at 25°C (77°F)] Ω	0.2 - 5.0

IACV-AAC VALVE

Resistance [at 25°C (77°F)] Ω	Approximately 10.0

INJECTOR

Resistance [at 25°C (77°F)] Ω	10 - 14

RESISTOR

Resistance [at 25°C (77°F)] kΩ	Approximately 2.2

THROTTLE POSITION SENSOR

Throttle valve conditions	Resistance [at 25°C (77°F)]
Completely closed	Approximately 0.5 kΩ
Partially open	0.5 - 4.0 kΩ
Completely open	Approximately 4.0 kΩ

CALCULATED LOAD VALUE

	Calculated load value % (Using CONSULT or GST)
At idle	16.8 - 34.7* (2WD) 15.9 - 33.2* (4WD)
At 2,500 rpm	14.1 - 27.6* (2WD) 13.3 - 26.1* (4WD)

*: Engine is warmed up sufficiently and running under no-load.

Inspection and Adjustment (Cont'd)

INTAKE AIR TEMPERATURE SENSOR

Temperature °C (°F)	Resistance
20 (68)	2.1 - 2.9 kΩ
80 (176)	0.27 - 0.38 kΩ

FRONT HEATED OXYGEN SENSOR HEATER

Resistance [at 25°C (77°F)]	Ω	2.3 - 4.3

REAR HEATED OXYGEN SENSOR HEATER

Resistance [at 25°C (77°F)]	Ω	11.4 - 17.4

CRANKSHAFT POSITION SENSOR (OBD)

Resistance [at 20°C (68°F)]	Ω	166.5 - 203.5

ACCELERATOR CONTROL, FUEL & EXHAUST SYSTEMS

SECTION FE

CONTENTS

ACCELERATOR CONTROL SYSTEM 2
Adjusting Accelerator Wire 2

FUEL SYSTEM 3
Fuel Tank 3
Fuel Pump and Gauge 6
EXHAUST SYSTEM 7

CAUTION:

- **When removing accelerator wire, mark initial position of lock nut.**
- **Check that throttle valve opens fully when accelerator pedal is fully depressed. Check that throttle valve returns to idle position when accelerator pedal is released.**
- **Check accelerator control parts for improper contact with any adjacent parts.**
- **When connecting accelerator wire, do not twist or scratch the inner wire.**
- **For adjustment of A/T throttle wire, refer to AT section ("Throttle Wire Adjustment", "ON-VEHICLE SERVICE").**

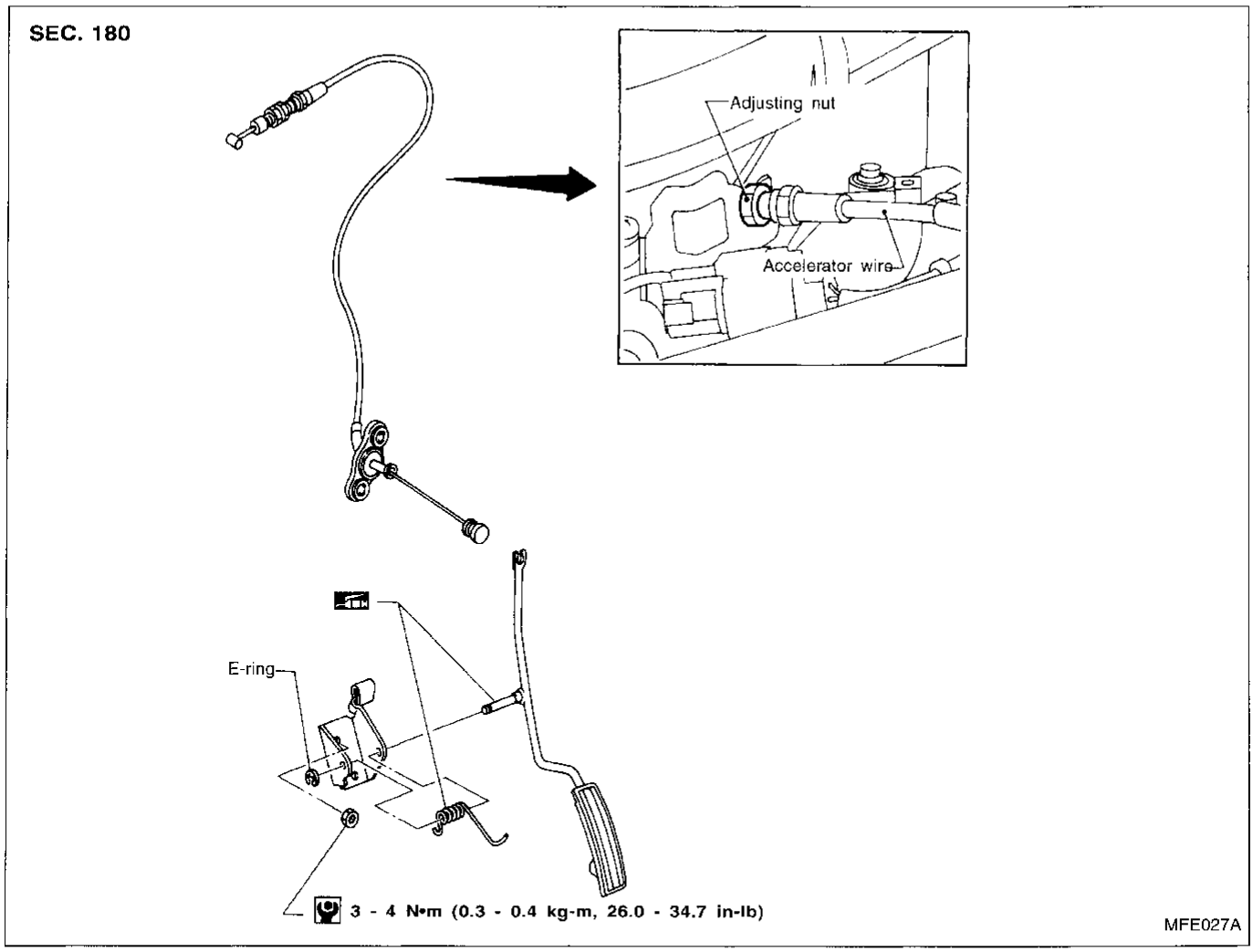

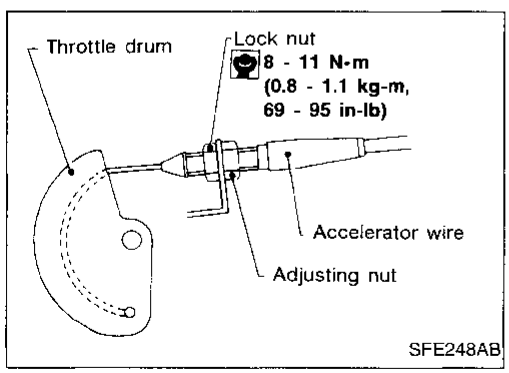

Adjusting Accelerator Wire

CAUTION:

- **Make sure the ASCD wire is not pulling the throttle drum.**
- **For ASCD wire adjustment, refer to EL section ["AUTOMATIC SPEED CONTROL DEVICE (ASCD)"].**

1. Loosen lock nut, and tighten adjusting nut until throttle drum starts to move.
2. Loosen adjusting nut 1.5 to 2 turns and tighten lock nut.

Fuel Tank

WARNING:
When replacing fuel line parts, be sure to observe the following:
- **Put a "CAUTION: FLAMMABLE" sign in workshop.**
- **Do not smoke while servicing fuel system. Keep open flames and sparks away from work area.**
- **Furnish workshop with a CO_2 fire extinguisher.**

CAUTION:
- **Before removing fuel line parts, carry out the following procedures:**

a. **Put drained fuel in an explosion-proof container and put the lid on securely.**
b. **Release fuel pressure from fuel line. Refer to EC section ("Fuel Pressure Release", "BASIC SERVICE PROCEDURE").**
c. **Disconnect battery ground cable.**

- **When installing fuel check valve, install it in the correct direction. Refer to EC section ("EVAPORATIVE EMISSION SYSTEM").**
- **Always replace O-ring with a new one.**
- **Do not kink or twist tubes and hoses during installation.**
- **To avoid damaging hoses, do not tighten hose clamps excessively.**
- **After installing tubes, run engine and check for fuel leaks at connections.**
- **Use only a genuine fuel filler cap as a replacement. If an incorrect fuel filler cap is used, the MIL may turn on.**
- **For inspection of EVAP shut valve, refer to EC section ("EVAPORATIVE EMISSION SYSTEM").**

SEC. 172

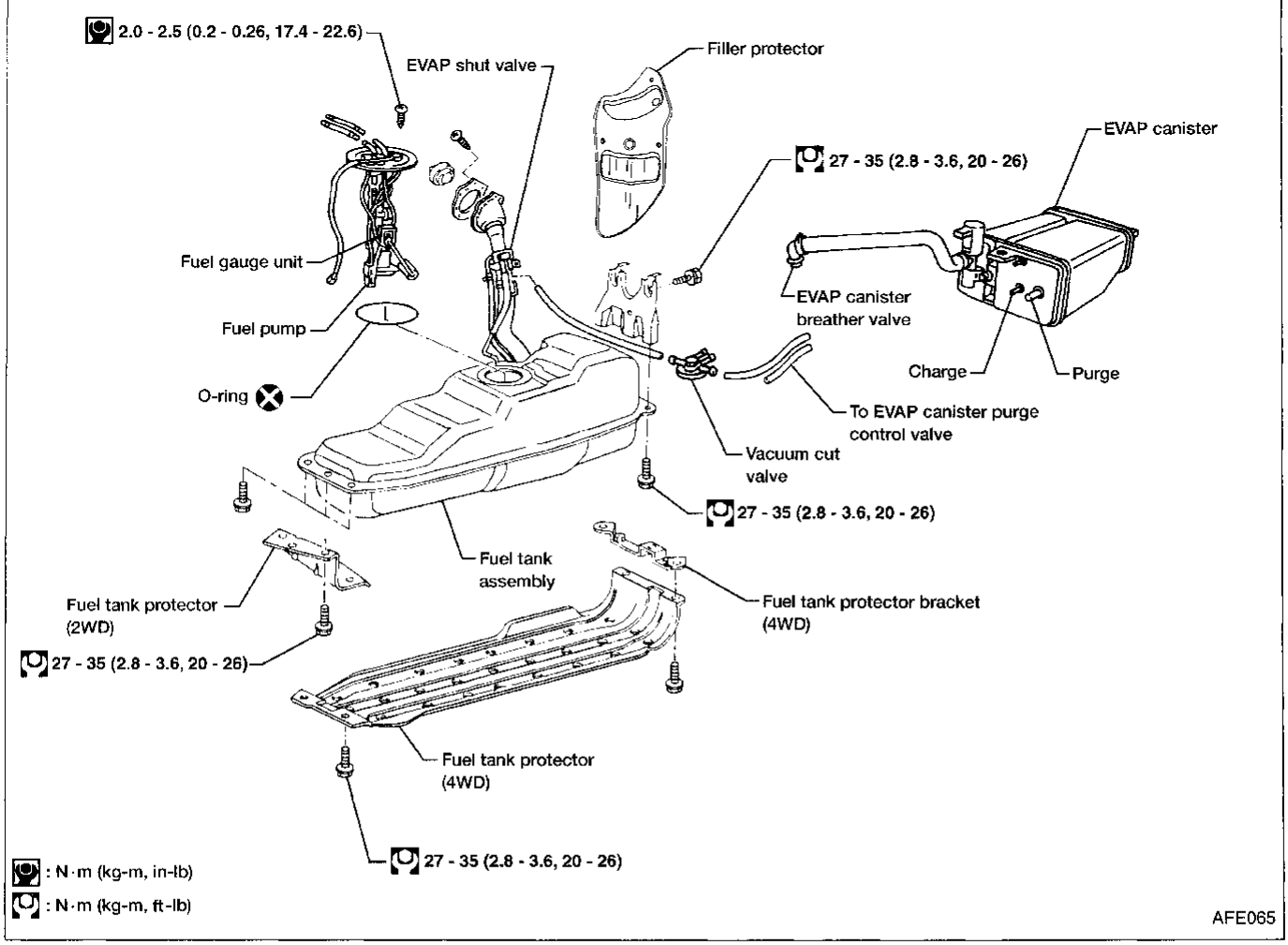

Fuel Tank (Cont'd)

REMOVAL

CAUTION:

- **Do not disconnect any fuel line unless absolutely necessary.**
- **Plug hose and pipe openings to prevent entry of dust or dirt.**

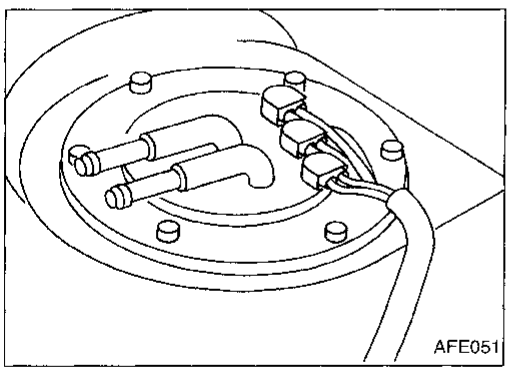

1. Release fuel pressure. Refer to EC section ("Fuel Pressure Release", "BASIC SERVICE PROCEDURE").
2. Disconnect battery ground cable.
3. Drain fuel from fuel tank.
4. Disconnect electrical connector.
5. Remove filler protector.
6. Disconnect filler tubes, fuel supply tube and fuel return tube.

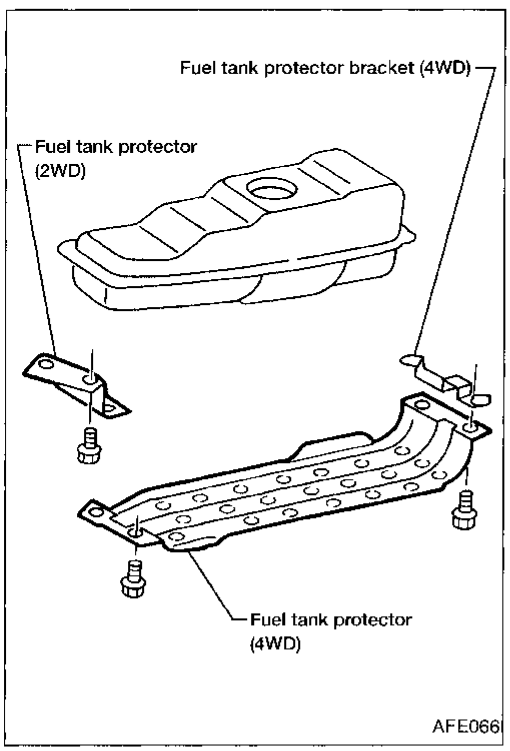

7. Remove fuel tank protector.

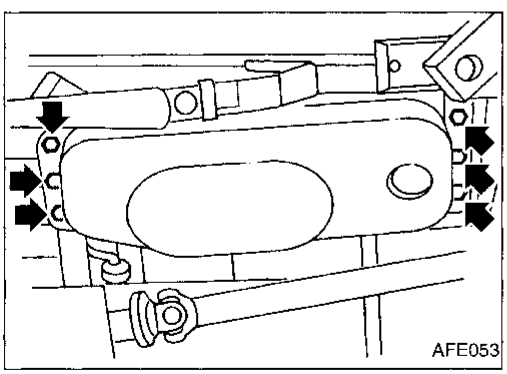

8. Remove six fuel tank mounting bolts while supporting fuel tank.

Fuel Tank (Cont'd)

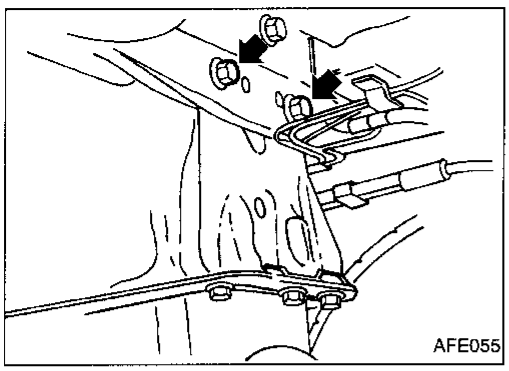

9. Remove rear fuel tank mounting bracket.

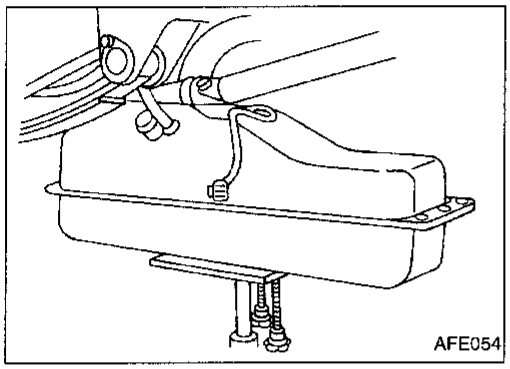

10. Remove fuel tank.

INSTALLATION

To install, reverse the removal procedure.

CAUTION:

- **Do not kink or twist hoses and tubes during installation.**
- **To avoid damaging hoses, do not tighten hose clamps excessively.**
- **Tighten bolts to specified torque.**
- **After installation, run engine and check for leaks at connections.**

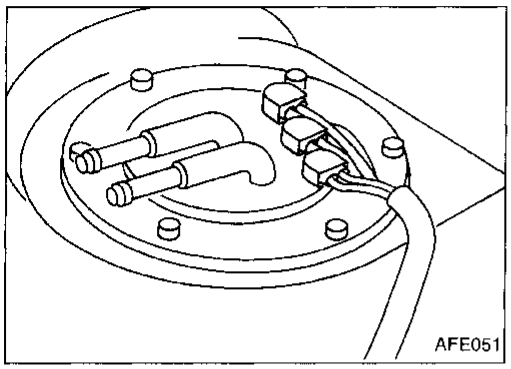

Fuel Pump and Gauge

REMOVAL

1. Remove fuel tank. Refer to FE-4.
2. Disconnect fuel supply tube, fuel return tube and electrical connector.
3. Remove the six screws.

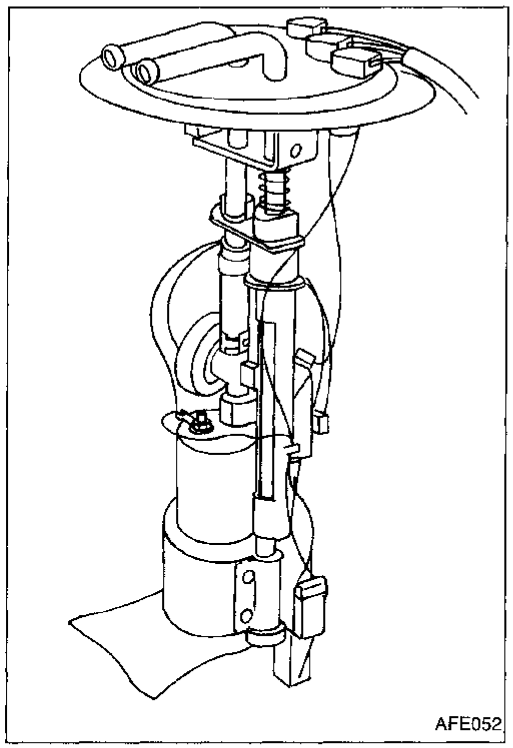

4. Remove fuel pump and gauge.

INSTALLATION

To install, reverse the removal procedure.

CAUTION:

- **Tighten bolts to specified torque.**
  : 2.0 - 2.5 N·m (0.20 - 0.26 kg-m, 17.4 - 22.6 in-lb)
- **Always replace O-ring with a new one.**
- **After installation, run engine and check for leaks at connections.**

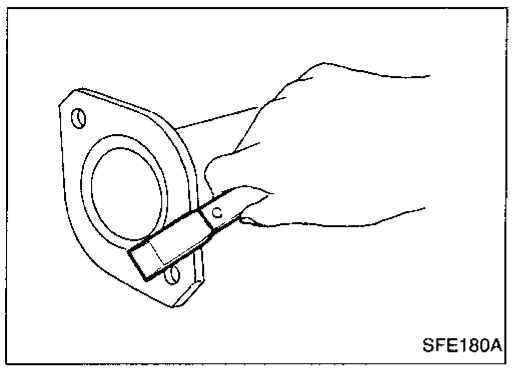

CAUTION:

- **Replace exhaust gaskets with new ones when reassembling.**
  If gasket remains on flange surface, scrape off completely as shown at left.
- **With engine running, check all tube connections for exhaust gas leaks, and entire system for unusual noises.**
- **Check to ensure that mounting brackets and mounting insulators are installed properly and are free from undue stress. Improper installation could result in excessive noise or vibration.**
- **Discard any heated oxygen sensor dropped from a height of more than 0.5 m (19.7 in) onto a hard surface such as a concrete floor; use a new one.**

2WD model
SEC. 200•208

13 - 16 (1.3 - 1.6, 9 - 12)
Three way catalytic converter
Rear heated oxygen sensor
40 - 60 (4.1 - 6.1, 30 - 44)
13 - 16 (1.3 - 1.6, 9 - 12)
43 - 55 (4.4 - 5.6, 32 - 41)
43 - 55 (4.4 - 5.6, 32 - 41)
Gasket
43 - 50 (4.4 - 5.1, 32 - 37)
13 - 16 (1.3 - 1.6, 9 - 12)
13 - 16 (1.3 - 1.6, 9 - 12)
43 - 55 (4.4 - 5.6, 32 - 41)
43 - 55 (4.4 - 5.6 - 32 - 41)
13 - 16 (1.3 - 1.6, 9 - 12)
5 - 7 (0.5 - 0.7, 43 - 61)
13 - 16 (1.3 - 1.6, 9 - 12)

: N·m (kg-m, in-lb)
: N·m (kg-m, ft-lb)
: Always replace after every disassembly

AFE049

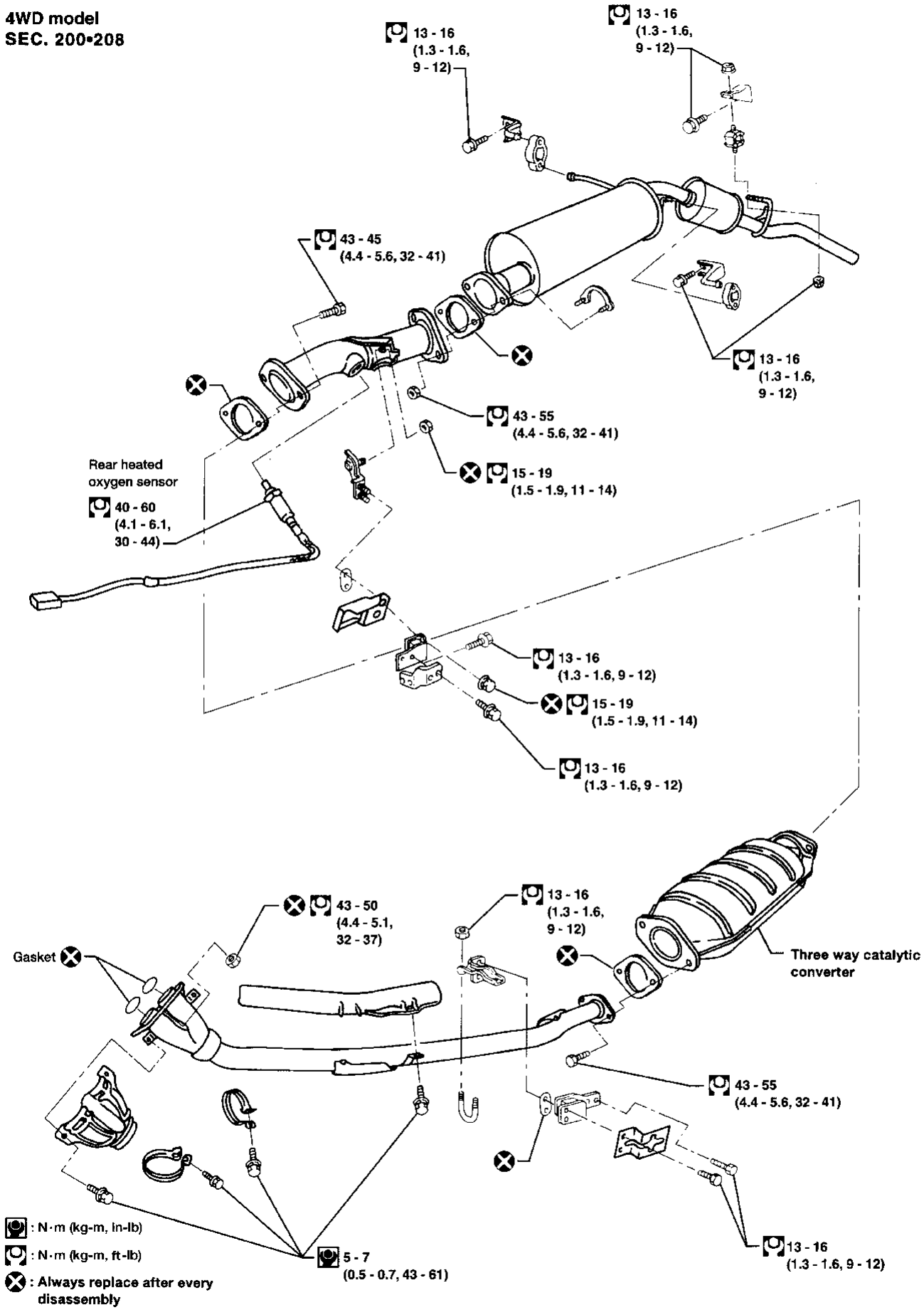
4WD model
SEC. 200•208
13 - 16 (1.3 - 1.6, 9 - 12)
13 - 16 (1.3 - 1.6, 9 - 12)
43 - 45 (4.4 - 5.6, 32 - 41)
13 - 16 (1.3 - 1.6, 9 - 12)
43 - 55 (4.4 - 5.6, 32 - 41)
15 - 19 (1.5 - 1.9, 11 - 14)
Rear heated oxygen sensor
40 - 60 (4.1 - 6.1, 30 - 44)
13 - 16 (1.3 - 1.6, 9 - 12)
15 - 19 (1.5 - 1.9, 11 - 14)
13 - 16 (1.3 - 1.6, 9 - 12)
43 - 50 (4.4 - 5.1, 32 - 37)
13 - 16 (1.3 - 1.6, 9 - 12)
Gasket
Three way catalytic converter
43 - 55 (4.4 - 5.6, 32 - 41)
: N·m (kg-m, in-lb)
: N·m (kg-m, ft-lb)
: Always replace after every disassembly
5 - 7 (0.5 - 0.7, 43 - 61)
13 - 16 (1.3 - 1.6, 9 - 12)
AFE050

SECTION CL

CONTENTS

PRECAUTIONS AND PREPARATION 2
Precautions 2
Special Service Tools 2
Commercial Service Tools 2
CLUTCH SYSTEM 3
Clutch Pedal 4
INSPECTION AND ADJUSTMENT 5
Adjusting Clutch Pedal 5
Bleeding Procedure 6
HYDRAULIC CLUTCH CONTROL 7
Clutch Master Cylinder 7
Operating Cylinder 8
Clutch Damper 9
CLUTCH RELEASE MECHANISM 10
CLUTCH DISC AND CLUTCH COVER 12
Clutch Disc 12
Clutch Cover and Flywheel 13
SERVICE DATA AND SPECIFICATIONS (SDS) 14
General Specifications 14
Inspection and Adjustment 14

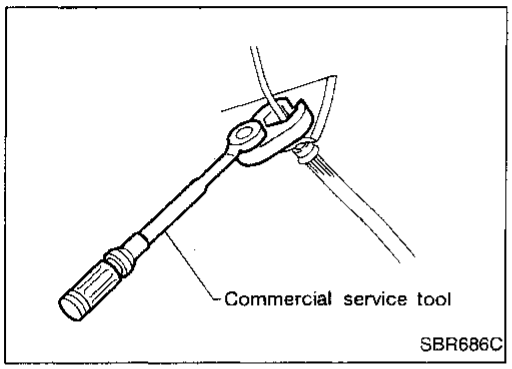

Precautions

- **Recommended fluid is brake fluid "DOT 3".**
- **Never reuse drained brake fluid.**
- **Be careful not to splash brake fluid on painted areas.**
- **When removing and installing clutch piping, use a suitable tool.**
- **Use new brake fluid to clean or wash all parts of master cylinder, operating cylinder and clutch damper.**
- **Never use mineral oils such as gasoline or kerosene. They will ruin the rubber parts of the hydraulic system.**

WARNING:
After cleaning the clutch disc, wipe it with a dust collector. Do not use compressed air.

Special Service Tools

The actual shapes of Kent-Moore tools may differ from those of special service tools illustrated here.

Tool number (Kent-Moore No.) Tool name	Description	
ST20630000 (J26366) Clutch aligning bar	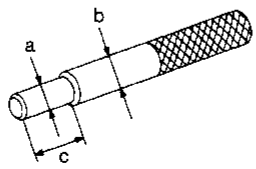 NT405	Installing clutch cover and clutch disc **a: 15.9 mm (0.626 in) dia.** **b: 22.8 mm (0.898 in) dia.** **c: 55 mm (2.17 in)**
ST20050240 (—) Diaphragm spring adjusting wrench	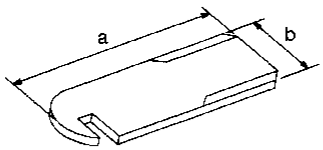 NT404	Adjusting unevenness of clutch cover diaphragm spring **a: 150 mm (5.91 in)** **b: 25 mm (0.98 in)**

Commercial Service Tools

Tool name	Description	
① Flare nut crowfoot ② Torque wrench	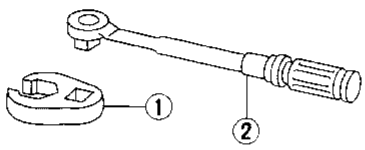 NT223	Removing and installing clutch piping **a: 10 mm (0.39 in)**
Bearing puller	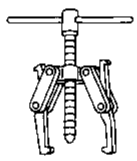 NT077	Removing release bearing
Bearing drift	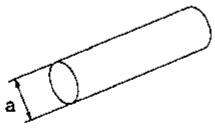 NT063	Installing release bearing **a: 50 mm (1.97 in) dia.**

SEC. 300•305•306•465

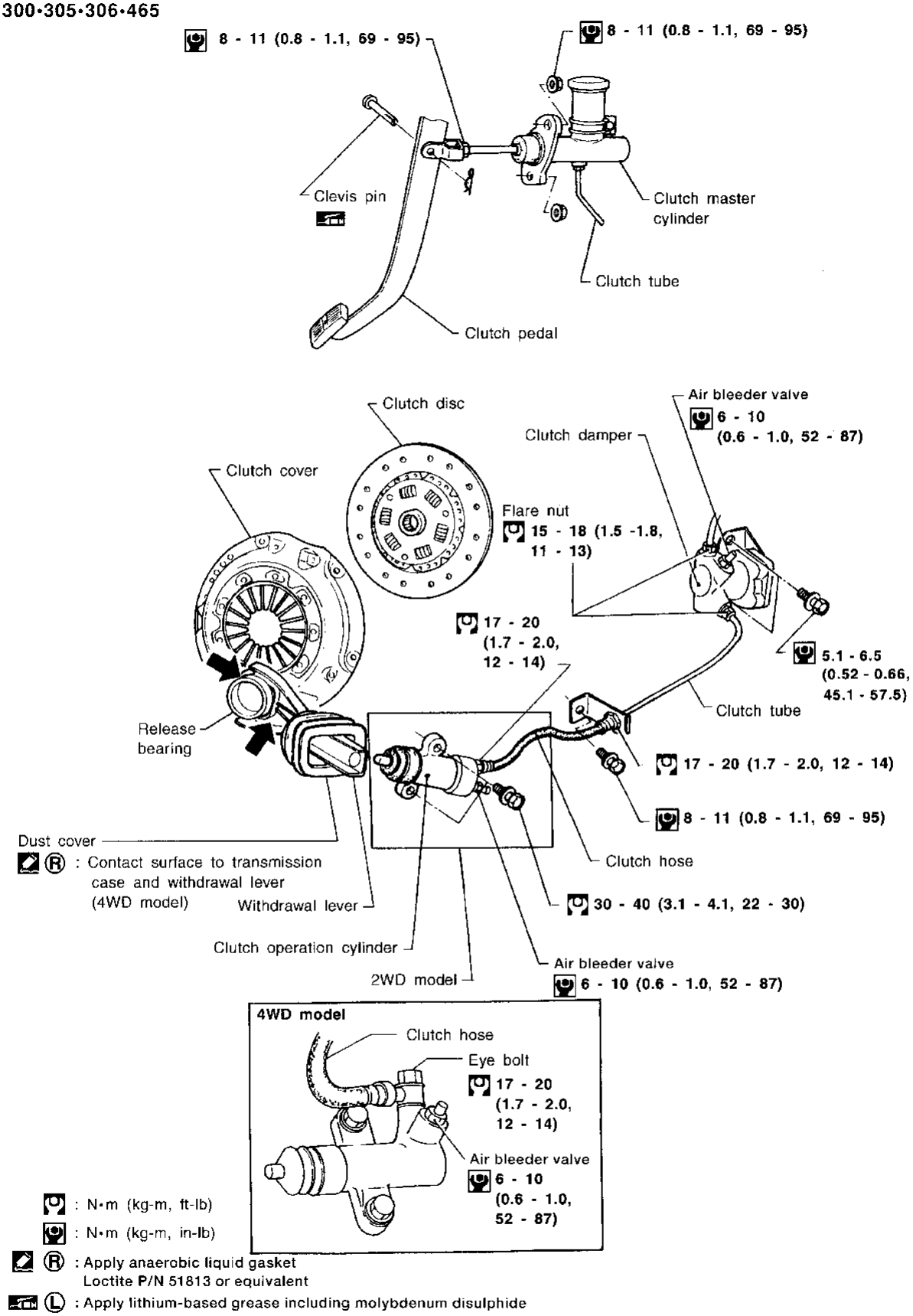

ACL033

Clutch Pedal

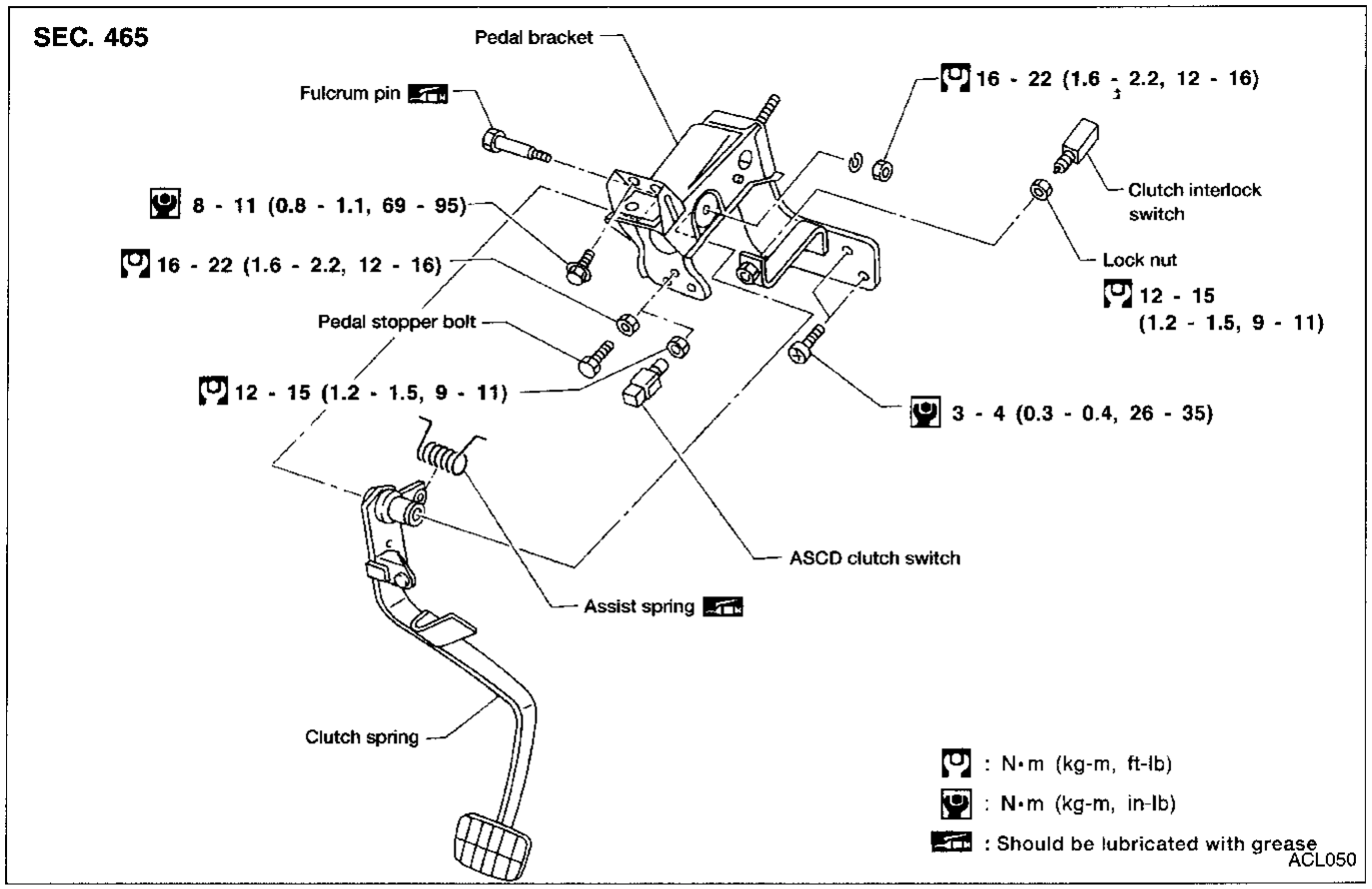

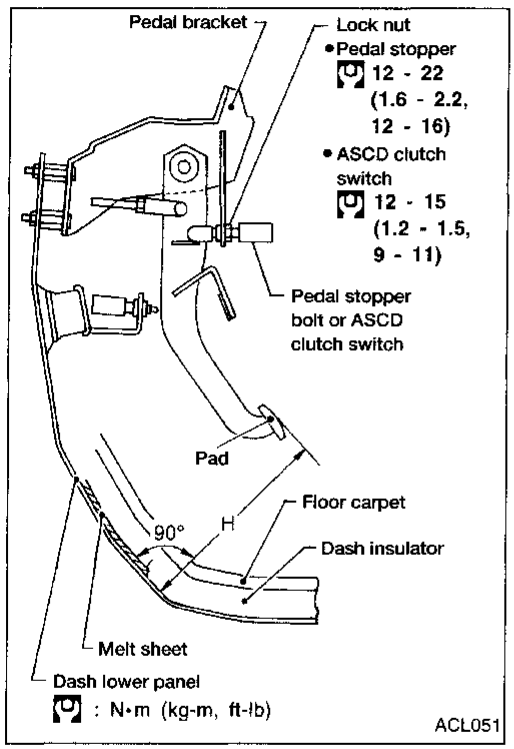

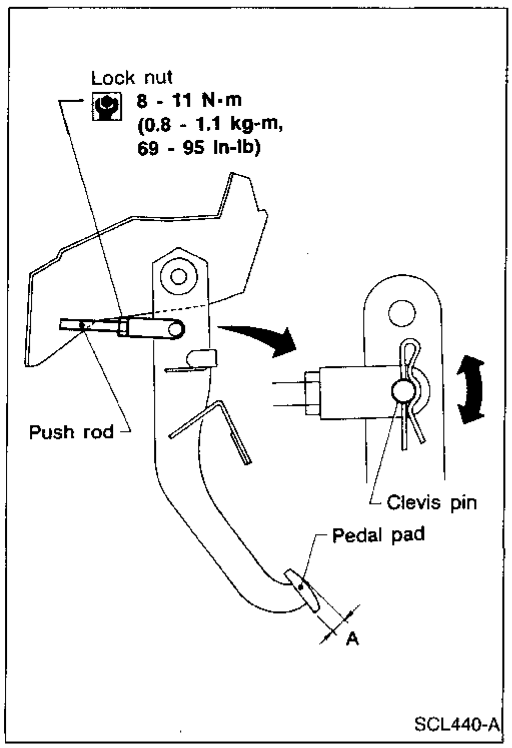

Adjusting Clutch Pedal

1. Adjust pedal height with pedal stopper bolt or ASCD clutch switch.
   Pedal height "H":
   236 - 246 mm (9.29 - 9.69 in)

2. Adjust pedal free play by turning master cylinder push rod. Then tighten lock nut.
   Pedal free play "A":
   9 - 16 mm (0.35 - 0.63 in)

Pedal free play, measured at pedal pad includes the following:

- **Free play due to clevis pin and clevis pin hole, push rod and master cylinder.**

3. Make sure that clevis pin can rotate smoothly.
   If not, readjust pedal free play with master cylinder push rod.

Adjusting Clutch Pedal (Cont'd)

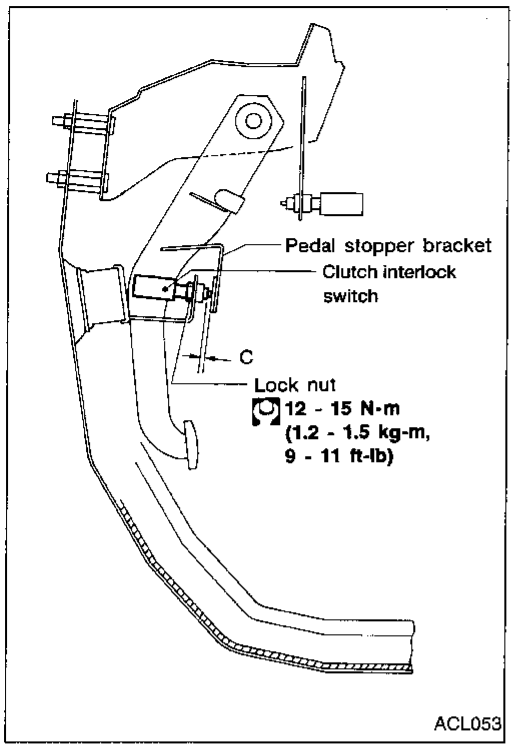

4. Adjust clearance "C" shown in the figure while fully depressing clutch pedal.
   Clearance "C":
   0.3 - 1.0 mm (0.012 - 0.039 in)

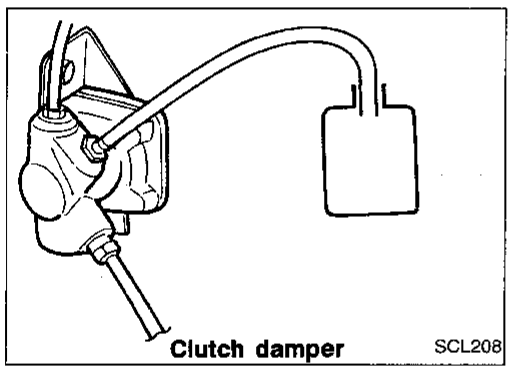

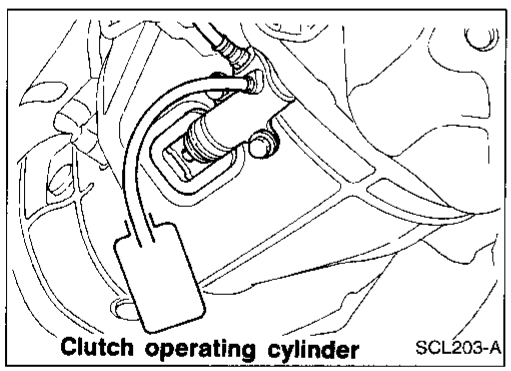

Bleeding Procedure

- **Carefully monitor fluid level at clutch master cylinder during bleeding operation.**

1. Bleed air from clutch operating cylinder according to the following procedures a through f.
   a. Fill reservoir with recommended brake fluid.
   b. Connect a transparent vinyl tube to air bleeder valve.
   c. Fully depress and release clutch pedal several times.
   d. While holding clutch pedal in the depressed position, open bleeder valve to release air.
   e. Close bleeder valve, then release clutch pedal.
   f. Repeat steps c through e above until brake fluid flows from air bleeder valve without air bubbles.
2. Bleed air from clutch damper by using the above procedures a through f.
3. Repeat the above bleeding procedures 1 and 2 several times.

Clutch Master Cylinder

SEC. 305

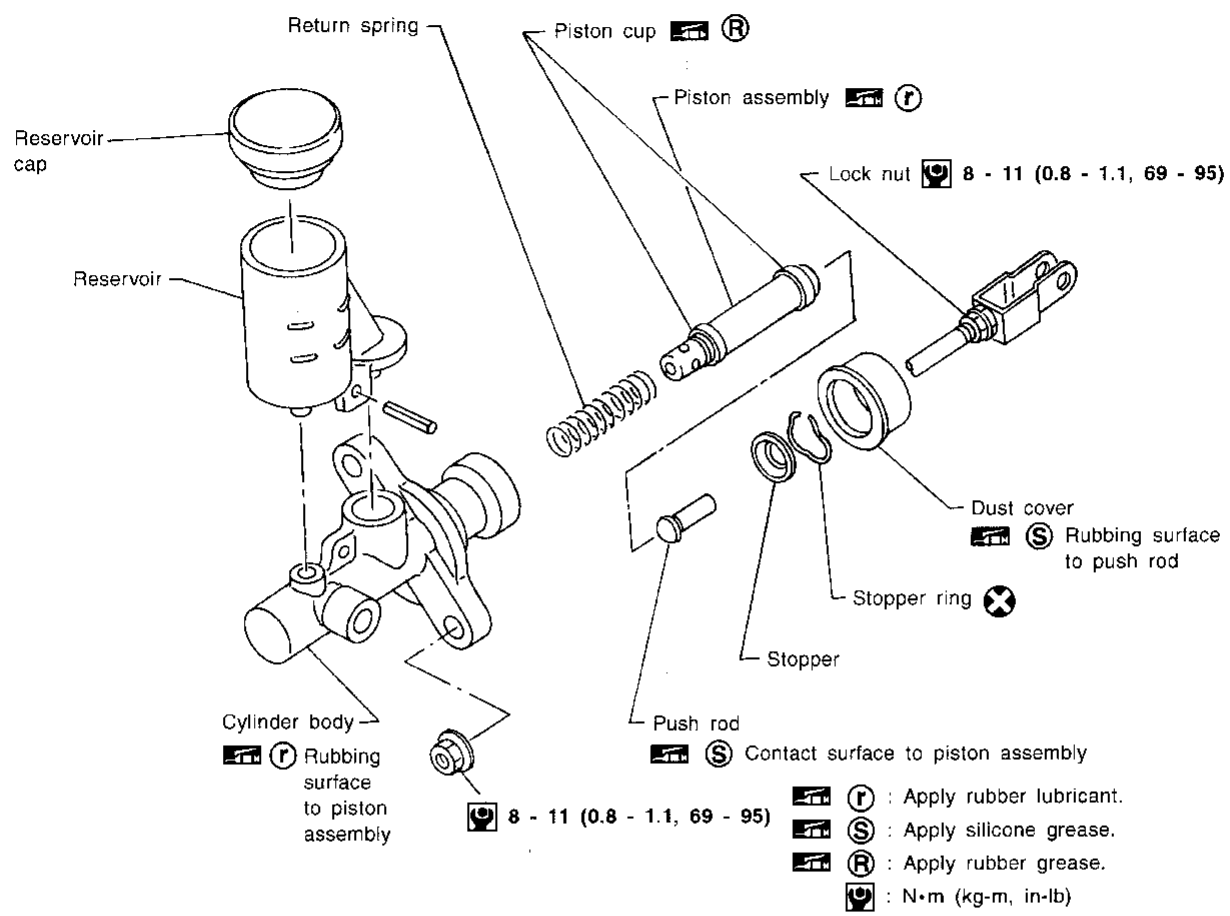

SCL686

DISASSEMBLY AND ASSEMBLY

- Use a screwdriver to remove stopper ring while pushing push rod into cylinder.
- When installing stopper ring, tap in lightly while pushing push rod into cylinder.

INSPECTION

Check the following items, and replace as necessary.

- Rubbing surface of cylinder and piston, for uneven wear, rust or damage
- Piston with piston cup, for wear or damage
- Return spring, for wear or damage
- Dust cover, for cracks, deformation or damage
- Reservoir, for deformation or damage

Operating Cylinder

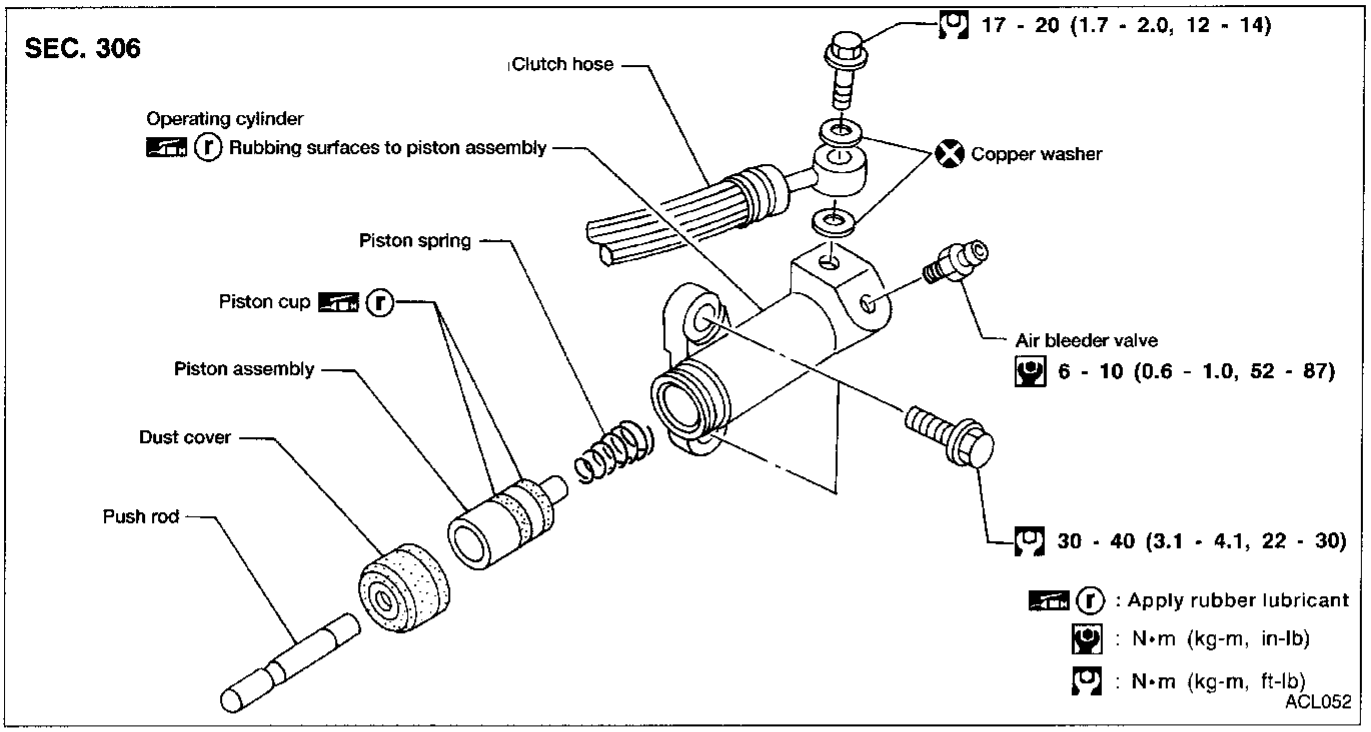

INSPECTION

Check the following items, and replace as necessary.

- Rubbing surface of cylinder and piston, for uneven wear, rust or damage
- Piston with piston cup, for wear or damage
- Piston spring, for wear or damage
- Dust cover, for cracks, deformation or damage

Clutch Damper

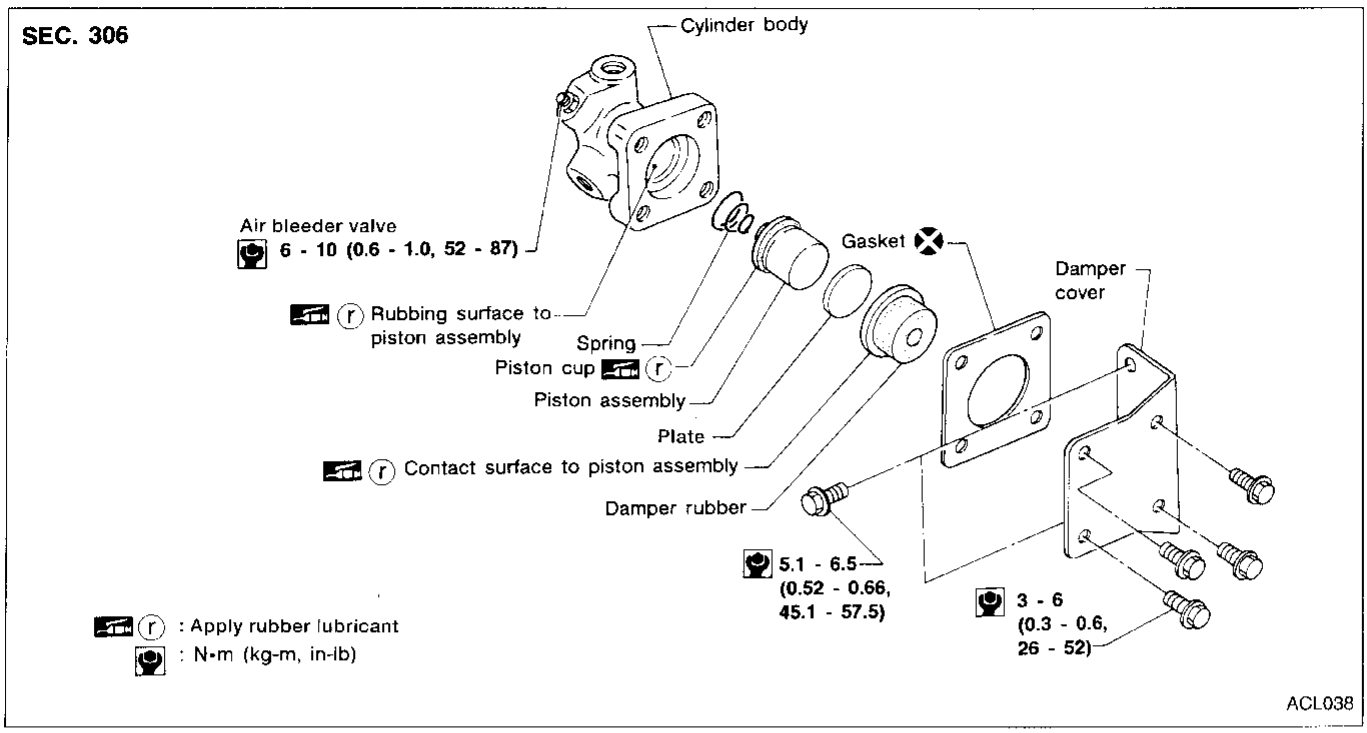

INSPECTION

Check the following items, and replace as necessary.

- Rubbing surface of cylinder and piston, for uneven wear, rust or damage
- Piston with piston cup, for wear or damage
- Damper rubber and plate for cracks, deformation or damage
- Piston spring, for wear or damage

SEC.

INSPECTION

Check the following items, and replace as necessary.

- Release bearing, to see that it rolls freely and is free from noise, cracks, pitting or wear
- Release sleeve and withdrawal lever rubbing surface, for wear, rust or damage

LUBRICATION

- Apply recommended grease to contact surface and rubbing surface.
- **Too much lubricant might damage clutch disc facing.**

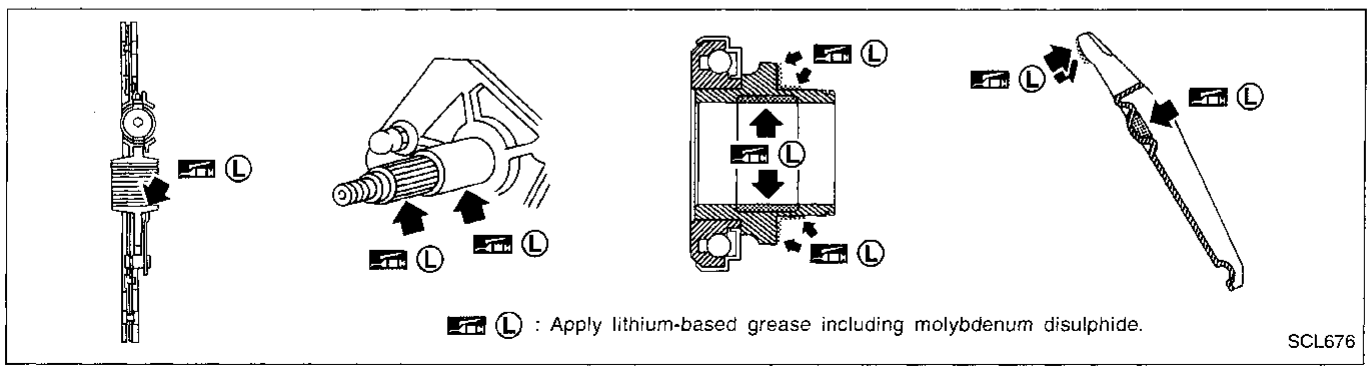

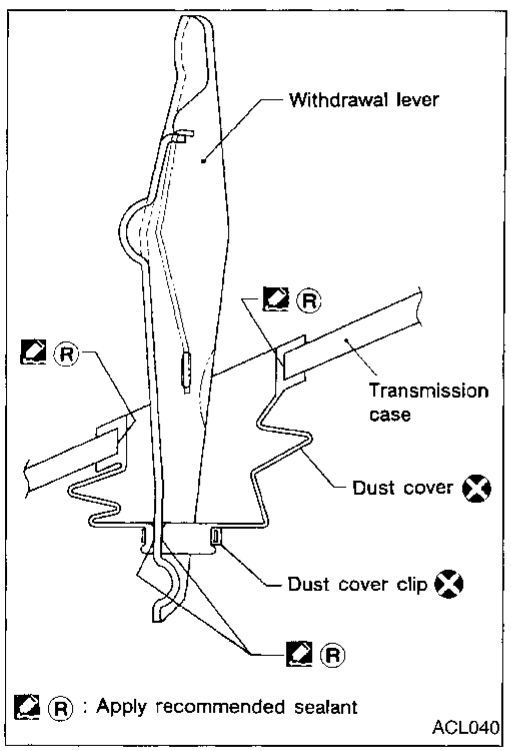

WATERPROOF — for 4WD model

- Apply recommended sealant to contact surface of transmission case dust cover and withdrawal lever, then install dust cover clip.

Recommended sealant: Nissan genuine part (KP115-00100) or equivalent.

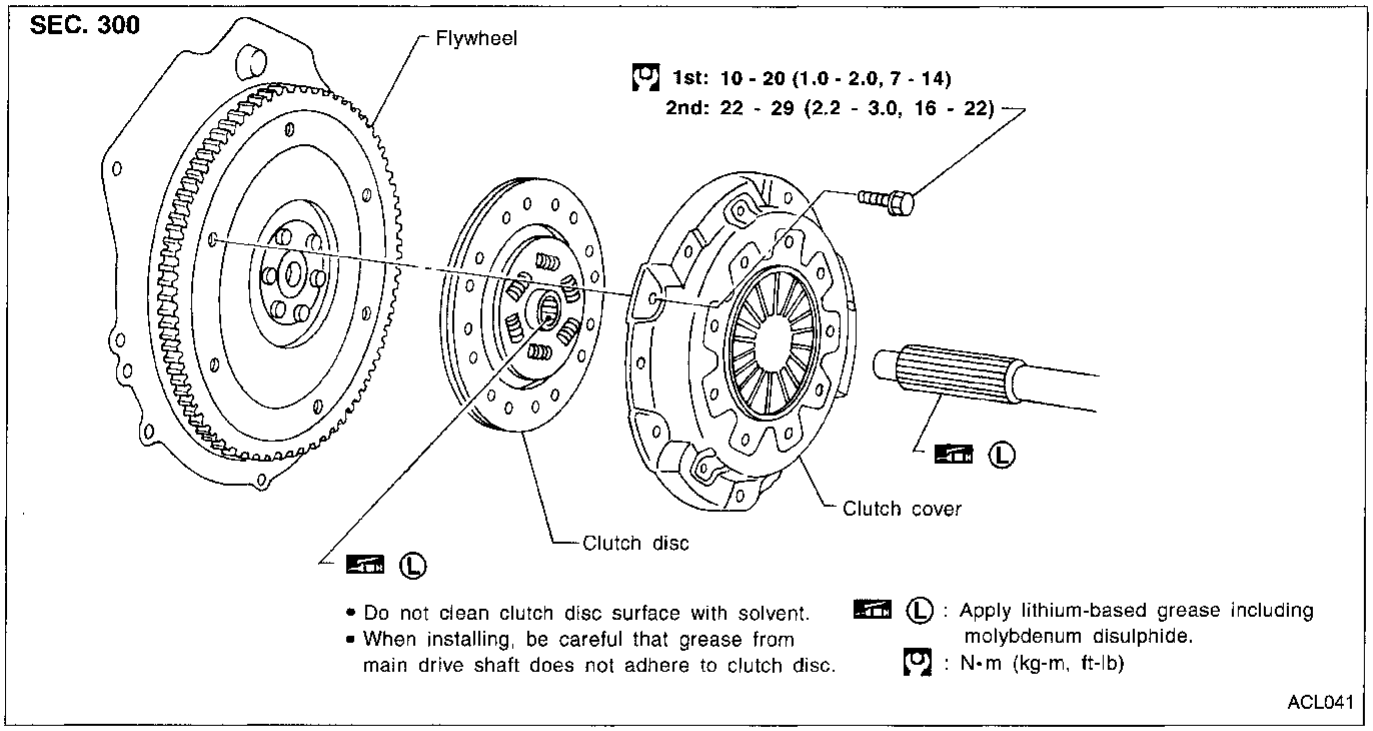

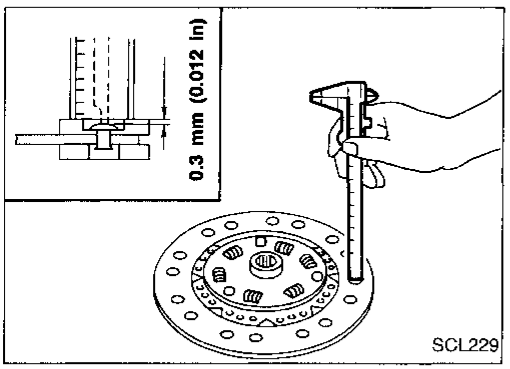

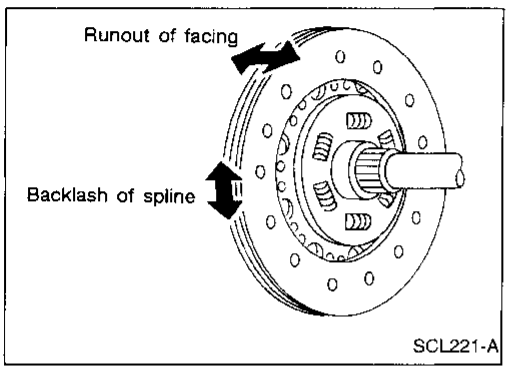

Clutch Disc

INSPECTION

Check the following items, and replace as necessary.

- Clutch disc, for burns, discoloration, oil or grease leakage
- Clutch disc, for wear of facing
  Wear limit of facing surface to rivet head:
  0.3 mm (0.012 in)

- Clutch disc, for backlash of spline and runout of facing
  Maximum backlash of spline (at outer edge of disc):
  1.0 mm (0.039 in)
  Runout limit:
  1.0 mm (0.039 in)
  Distance of runout check point (from hub center):
  115 mm (4.53 in)

INSTALLATION

- Apply recommended grease to contact surface of splines.
- **Too much lubricant may damage clutch disc facing.**

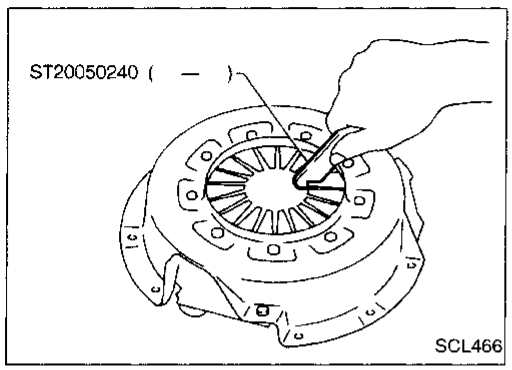

Clutch Cover and Flywheel

INSPECTION AND ADJUSTMENT

- Check clutch cover, installed on vehicle, for uneven diaphragm spring toe height.
  Uneven limit:
  0.7 mm (0.028 in)
- If out of limit, adjust the height using Tool.

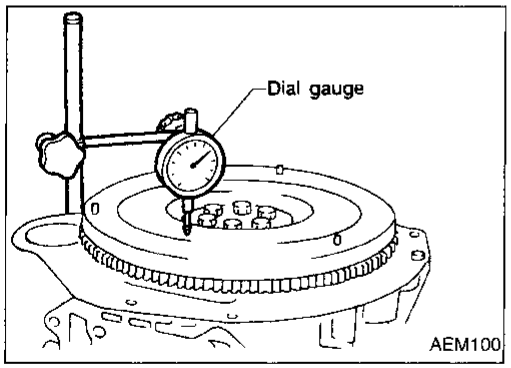

FLYWHEEL INSPECTION

CAUTION:
Do not allow any magnetic materials to contact the ring gear teeth.

- Inspect contact surface of flywheel for slight burns or discoloration. Clean flywheel using emery paper.
- Check flywheel runout.
  Maximum allowable runout:
  Refer to EM section ("Inspection", "CYLINDER BLOCK").

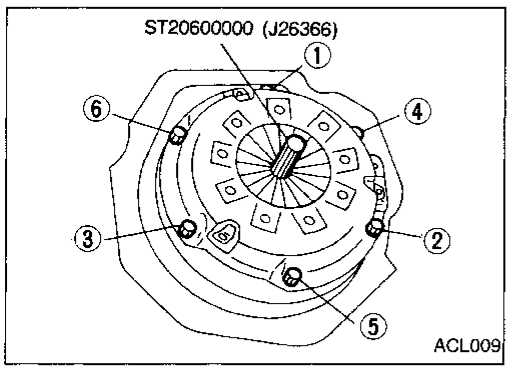

INSTALLATION

- Insert Tool into clutch disc hub while installing clutch cover and disc.
- Be careful not to allow grease to contaminate clutch facing.
- Tighten bolts in numerical order, in two steps.
  First step:
  [ ]: 10 - 20 N·m (1.0 - 2.0 kg-m, 7 - 14 ft-lb)
  Final step:
  [ ]: 22 - 29 N·m (2.2 - 3.0 kg-m, 16 - 22 ft-lb)

General Specifications

CLUTCH MASTER CYLINDER

Inner diameter	mm (in)	15.87 (5/8)

CLUTCH OPERATING CYLINDER

Inner diameter	mm (in)	17.46 (11/16)

CLUTCH DAMPER

Inner diameter	mm (in)	19.05 (3/4)

CLUTCH DISC

Model	240
Engine	KA24E
Facing size (Outer dia. x inner dia. x thickness) mm (in)	240 x 150 x 3.5 (9.45 x 5.91 x 0.138)
Thickness of disc assembly With load mm (in)	7.8 - 8.2 (0.307 - 0.323) with 4,413 N (450 kg, 992 lb)

CLUTCH COVER

Model	240
Engine	KA24E
Set-load N (kg, lb)	4,413 (450, 992)

Inspection and Adjustment

CLUTCH PEDAL

Unit: mm (in)

Pedal height "H"*	236 - 246 (9.29 - 9.69)
Pedal free play "A" (at pedal pad)	9 - 16 (0.35 - 0.63)
Clearance "C" between pedal stopper bracket and clutch pedal position switch (with clutch pedal fully depressed)	0.3 - 1.0 (0.012 - 0.039)

*: Measured from surface of dash lower panel to pedal pad.

CLUTCH DISC

Unit: mm (in)

Model	240
Wear limit of facing surface to rivet head	0.3 (0.012)
Runout limit of facing	1.0 (0.039)
Distance of runout check point (from hub center)	115 (4.53)
Maximum backlash of spline (at outer edge of disc)	1.0 (0.039)

CLUTCH COVER

Unit: mm (in)

Model	240
Diaphragm spring height	37.5 - 39.5 (1.476 - 1.555)
Uneven limit of diaphragm spring toe height	0.7 (0.028)

SECTION MT

CONTENTS

PREPARATION 2
Special Service Tools 2
Commercial Service Tools 3
ON-VEHICLE SERVICE 4
Replacing Rear Oil Seal — 2WD Model 4
Position Switch Check 4
REMOVAL AND INSTALLATION 5
MAJOR OVERHAUL 7
Case Components 7
Gear Components — 2WD Model 8
Gear Components — 4WD Model 9
Shift Control Components 10
DISASSEMBLY 11
Case Components 11
Shift Control Components 11
Gear Components 12
INSPECTION 15
Shift Control Components 15
Gear Components 15
Gears And Shafts 15
Synchronizers 15
Bearings 16
ASSEMBLY 17
Gear Components 17
Shift Control Components 23
Case Components 24
SERVICE DATA AND SPECIFICATIONS (SDS) 27
General Specifications 27
Inspection and Adjustment 28

Special Service Tools

The actual shapes of Kent-Moore tools may differ from those of special service tools illustrated here.

Tool number (Kent-Moore No.) Tool name	Description	
ST23810001 (—) Adapter setting plate	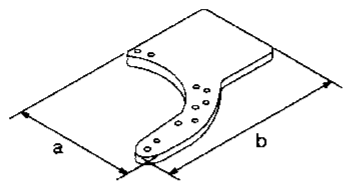 NT407	Fixing adapter plate with gear assembly **a: 166 mm (6.54 in)** **b: 270 mm (10.63 in)**
KV32101330 (See J26349-A) Puller	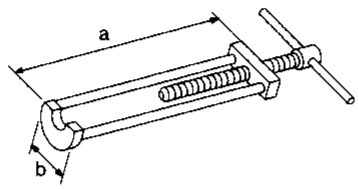 NT408	Removing overdrive mainshaft bearing **a: 447 mm (17.60 in)** **b: 100 mm (3.94 in)**
KV31100401 (—) Transmission press stand	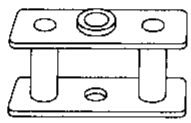 NT068	Pressing counter gear and mainshaft
ST22520000 (J26348) Wrench	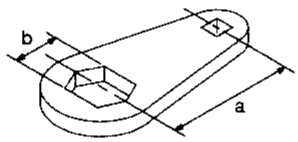 NT409	Tightening mainshaft lock nut **a: 100 mm (3.94 in)** **b: 41 mm (1.61 in)**
ST23540000 (J25689-A) Pin punch	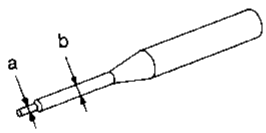 NT442	Removing and installing fork rod retaining pin **a: 2.3 mm (0.091 in) dia.** **b: 4 mm (0.16 in) dia.**
ST30031000 (J22912-01) Puller	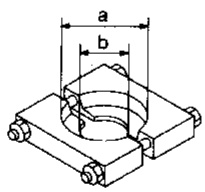 NT411	Removing and installing 1st gear bushing Removing main drive gear bearing **a: 90 mm (3.54 in) dia.** **b: 50 mm (1.97 in) dia.**
ST23860000 (—) Drift	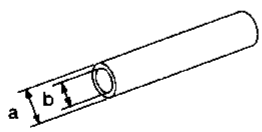 NT065	Installing counter drive gear **a: 38 mm (1.50 in) dia.** **b: 33 mm (1.30 in) dia.**
ST22360002 (J25679-01) Drift	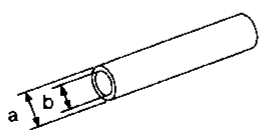 NT065	Installing counter gear front and rear end bearings **a: 29 mm (1.14 in) dia.** **b: 23 mm (0.91 in) dia.**
ST22350000 (J25678-01) Drift	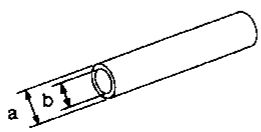 NT065	Installing OD gear bushing **a: 34 mm (1.34 in) dia.** **b: 28 mm (1.10 in) dia.**

Special Service Tools (Cont'd)

Tool number (Kent-Moore No.) Tool name	Description	
ST23800000 (J25691-01) Drift	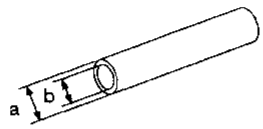 NT065	Installing front cover oil seal **a: 44 mm (1.73 in) dia.** **b: 31 mm (1.22 in) dia.**
ST33400001 (J26082) Drift	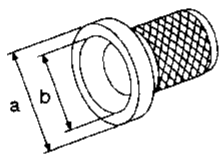 NT086	Installing rear oil seal **a: 60 mm (2.36 in) dia.** **b: 47 mm (1.85 in) dia.**
ST33290001 (J34286) Puller	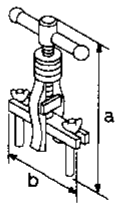 NT414	Removing rear oil seal **a: 250 mm (9.84 in)** **b: 160 mm (6.30 in)**
ST30720000 (J25405) Drift	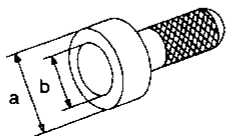 NT115	Installing mainshaft ball bearing **a: 77 mm (3.03 in) dia.** **b: 55.5 mm (2.185 in) dia.**
ST30613000 (J25742-3) Drift	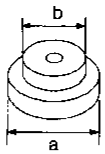 NT073	Installing main drive gear bearing **a: 71.5 mm (2.815 in) dia.** **b: 47.5 mm (1.870 in) dia.**
ST33200000 (J26082) Drift	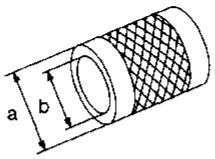 NT091	Installing counter rear bearing **a: 60 mm (2.36 in) dia.** **b: 44.5 mm (1.752 in) dia.**

Commercial Service Tools

Tool name	Description	
Puller	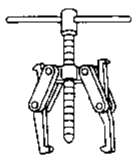 NT077	Removing counter bearings, counter drive and OD gears
Drift	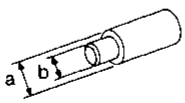 NT074	Installing countershaft rear end bearing (FS5W71C-4WD model) **a: 40 mm (1.57 in) dia.** **b: 30 mm (1.18 in) dia.**

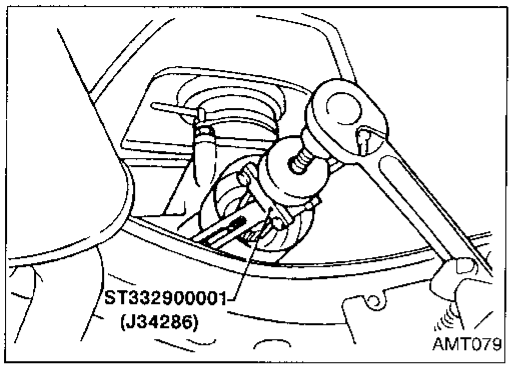

Replacing Rear Oil Seal — 2WD Model

REMOVAL

1. Remove the propeller shaft. Refer to PD section ("Removal and Installation", "PROPELLER SHAFT").
2. Remove rear oil seal using Tool.

- **Always replace with a new seal once it has been removed.**

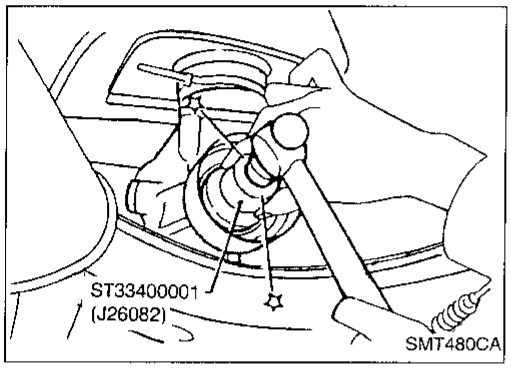

INSTALLATION

1. Install new oil seal until it stops.

- **Apply multi-purpose grease to seal lip of oil seal before installing.**

2. Install any part removed.

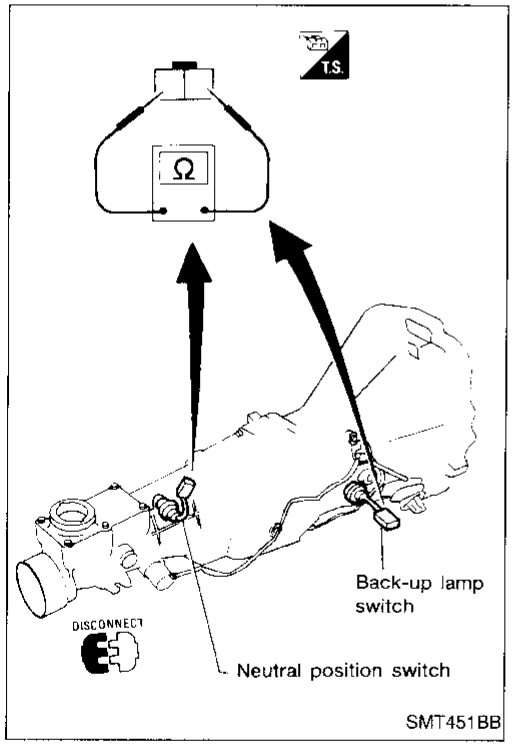

Position Switch Check

- Check continuity.

Switch	Gear position	Continuity
Back-up lamp switch	Reverse	Yes
	Except reverse	No
Neutral position switch	Neutral	Yes
	Except neutral	No

Removal

CAUTION:
Before separating the transmission from the engine, remove the crankshaft position sensor (OBD) from the transmission. Be careful not to damage sensor edge or ring gear teeth.

2WD MODEL

1. Remove battery negative terminal.
2. Remove crankshaft position sensor (OBD) from transmission upper side.
3. Remove clutch operating cylinder from transmission.
4. Remove back-up switch and neutral position switch harness connectors.
5. Remove starter motor from transmission.
6. Remove propeller shaft. Refer to PD section ("Removal and Installation", "PROPELLER SHAFT").

- **Insert plug into rear oil seal after removing propeller shaft.**
- **Be careful not to damage spline, sleeve yoke and rear oil seal when removing propeller shaft.**

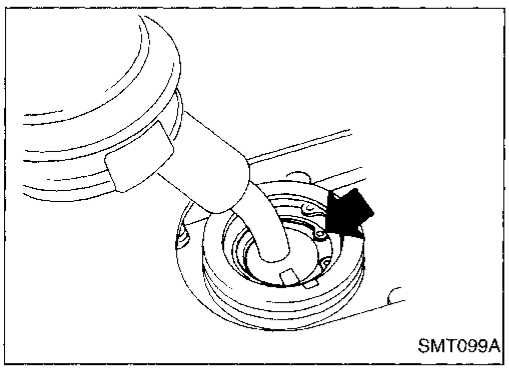
SMT099A

7. Remove control lever.
8. Support engine by placing a jack under oil pan.

- **Do not place jack under oil pan drain plug.**

9. Separate transmission from engine.

WARNING:
Support manual transmission while removing it.

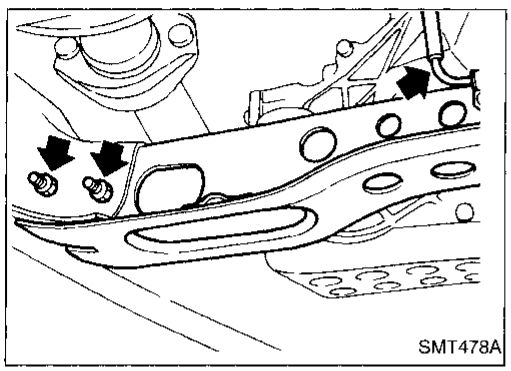
SMT478A

4WD MODEL

1. Remove battery negative terminal.
2. Remove crankshaft position sensor (OBD) from transmission upper side.
3. Remove clutch operating cylinder from transmission.
4. Remove back-up switch and neutral position switch harness connector.
5. Remove starter motor from transmission.
6. Remove front and rear propeller shafts. Refer to PD section ("Removal and Installation", "PROPELLER SHAFT").

- **Insert plug into front and rear oil seals of transfer after removing propeller shafts.**
- **Be careful not to damage splines, sleeve yokes and front and rear oil seals of transfer when removing propeller shafts.**

7. Remove torsion bar springs. Refer to FA section ("Torsion Bar Spring", "FRONT SUSPENSION"). Then remove second crossmember.

Removal (Cont'd)

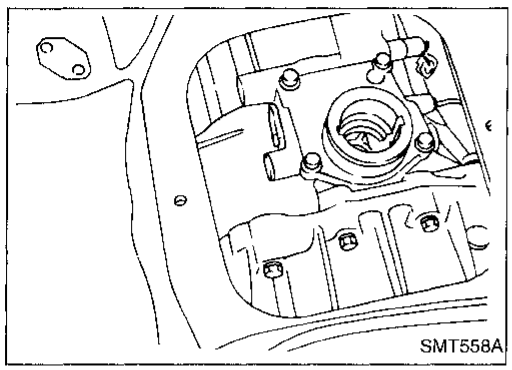

8. Remove transmission and transfer control levers.
9. Support engine by placing a jack under oil pan.
   - **Do not place jack under oil pan drain plug.**
10. Separate transmission with transfer from engine.

WARNING:
Support manual transmission with transfer while removing it.

Installation

1. Apply sealant to areas shown below: — 4WD model

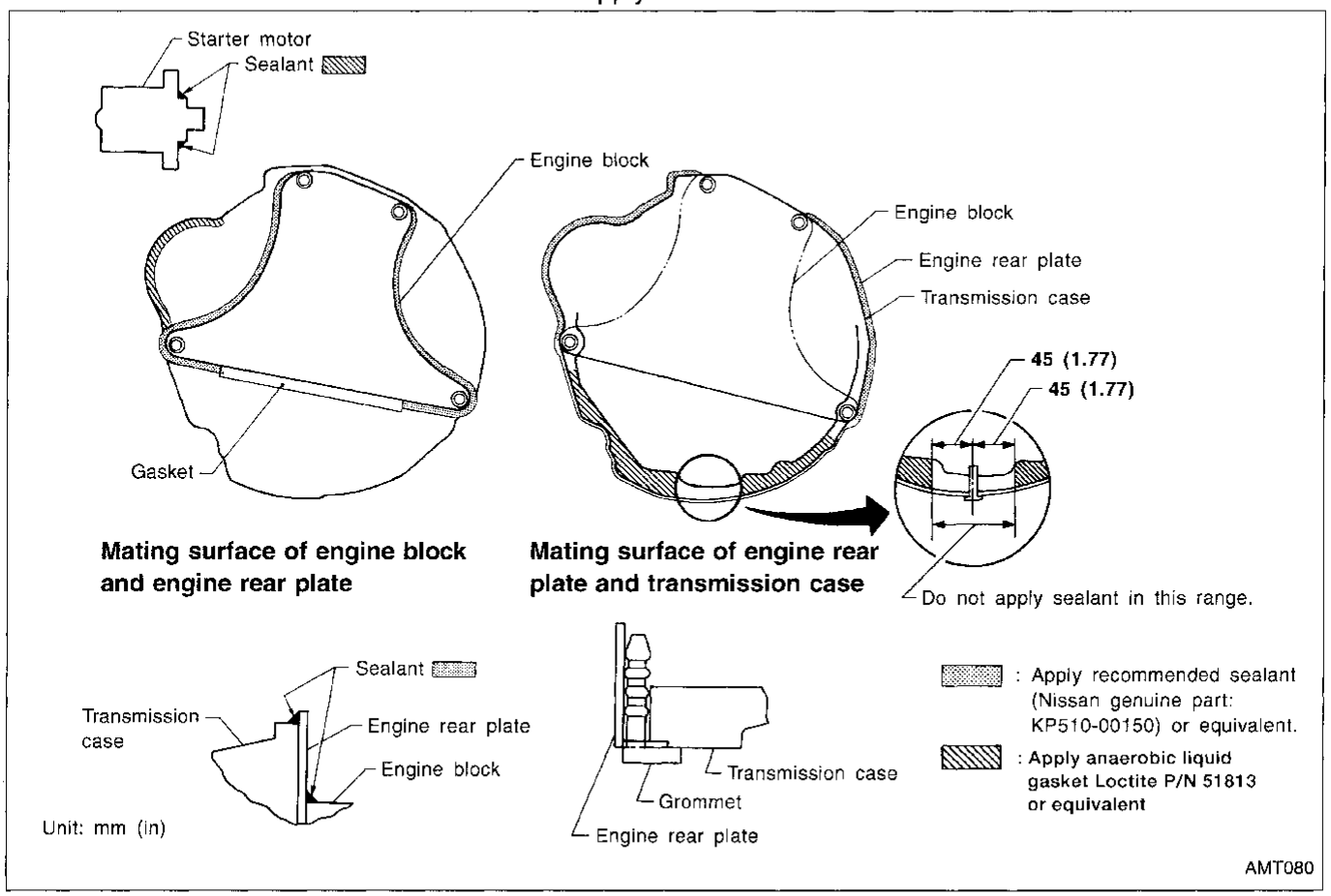

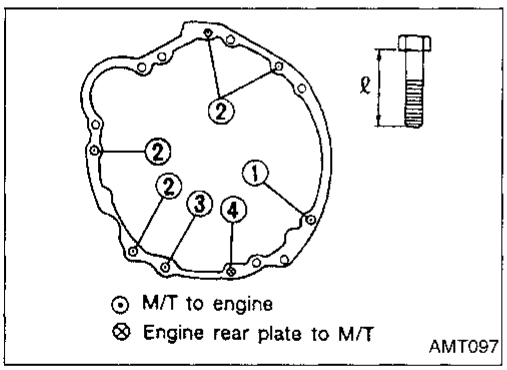

2. Tighten bolts securing transmission.

Bolt No.	Tightening torque N·m (kg-m, ft-lb)	ℓ mm (in)
①	39 - 49 (4.0 - 5.0, 29 - 36)	65 (2.56)
②	39 - 49 (4.0 - 5.0, 29 - 36)	58 (2.28)
③*	16 - 22 (1.6 - 2.2, 12 - 16)	25 (0.98)
④	16 - 22 (1.6 - 2.2, 12 - 16)	16 (0.63)

*: With nut

3. Tighten clutch operating cylinder to the specified torque. Refer to CL section ("CLUTCH SYSTEM").

Case Components

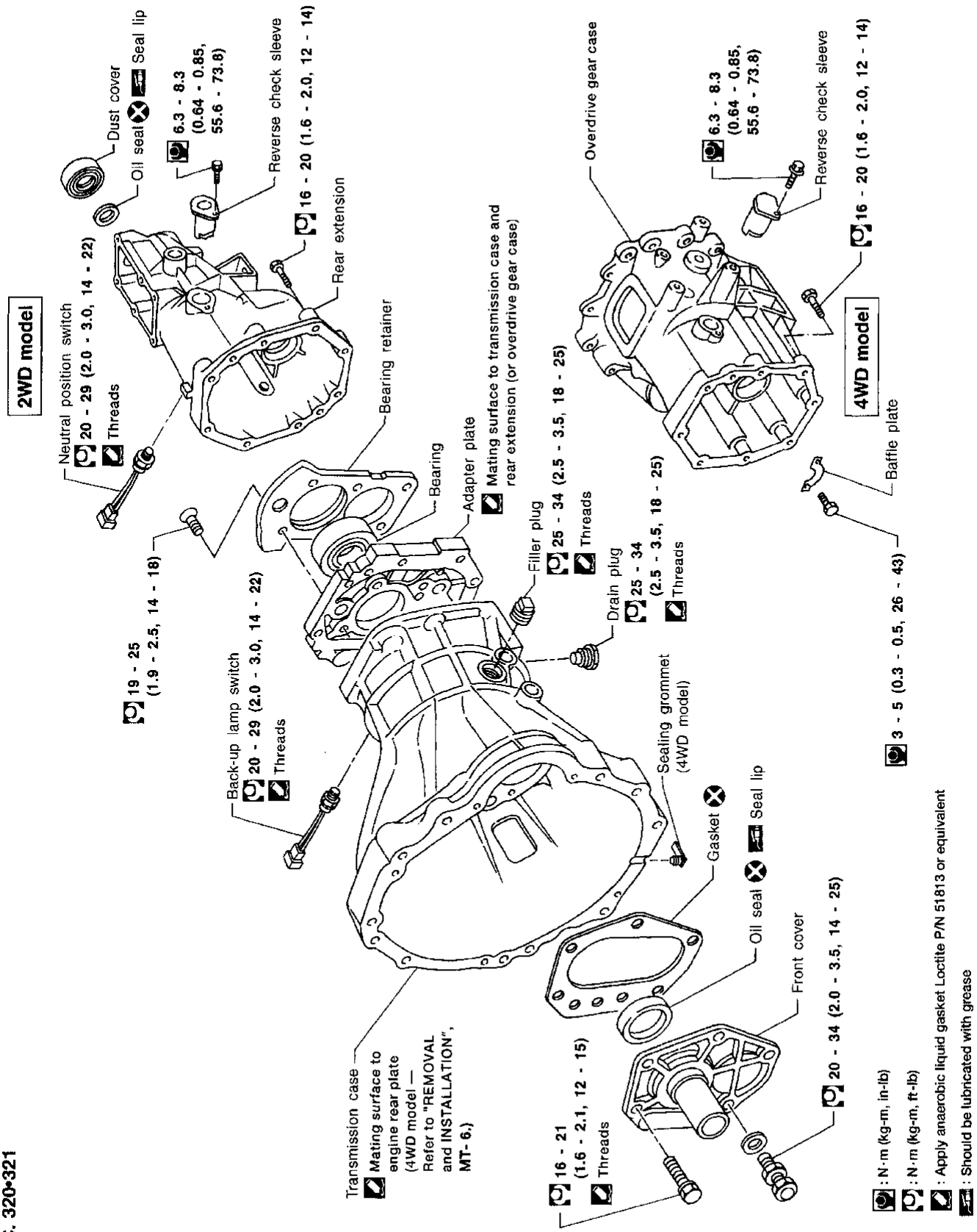

AMT108

Gear Components — 2WD Model

SEC. 322

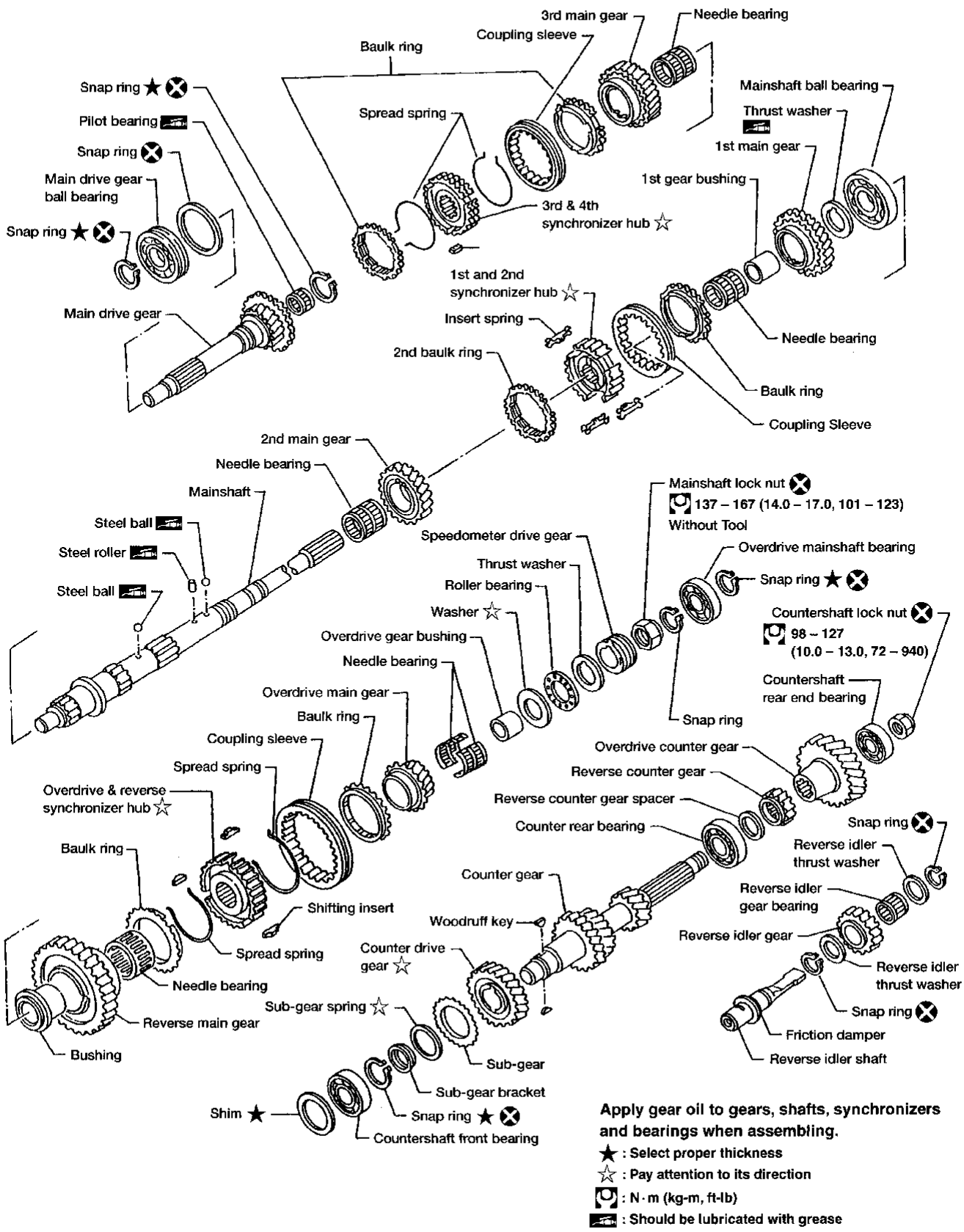

Apply gear oil to gears, shafts, synchronizers and bearings when assembling.

★ : Select proper thickness

☆ : Pay attention to its direction

: N·m (kg-m, ft-lb)

: Should be lubricated with grease

AMT105

Gear Components — 4WD Model

SEC. 322

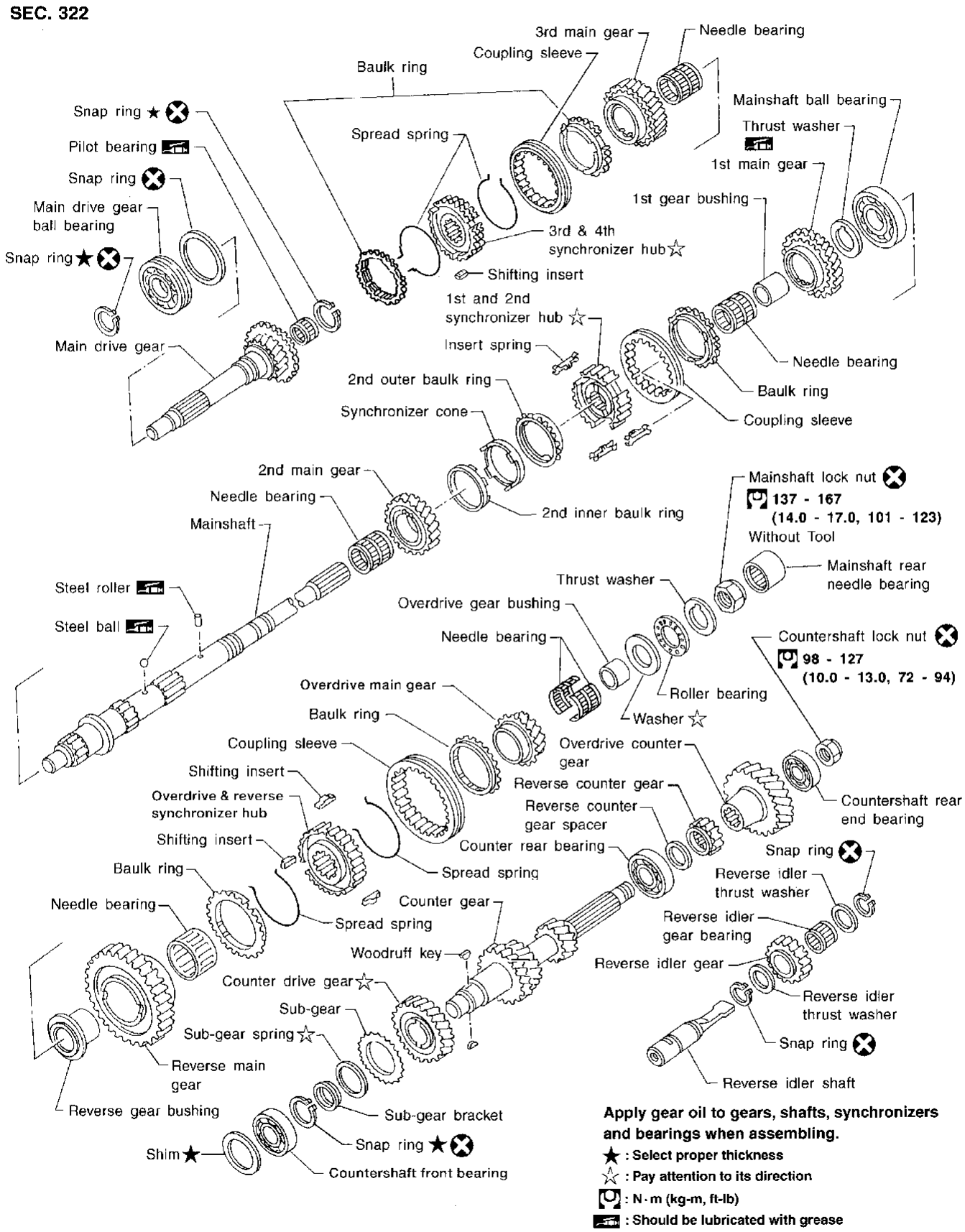

Apply gear oil to gears, shafts, synchronizers and bearings when assembling.

★ : Select proper thickness

☆ : Pay attention to its direction

: N·m (kg-m, ft-lb)

: Should be lubricated with grease

AMT106

Shift Control Components

CAUTION:
To avoid damage when replacing shift knob, remove control lever with knob, as assembled.

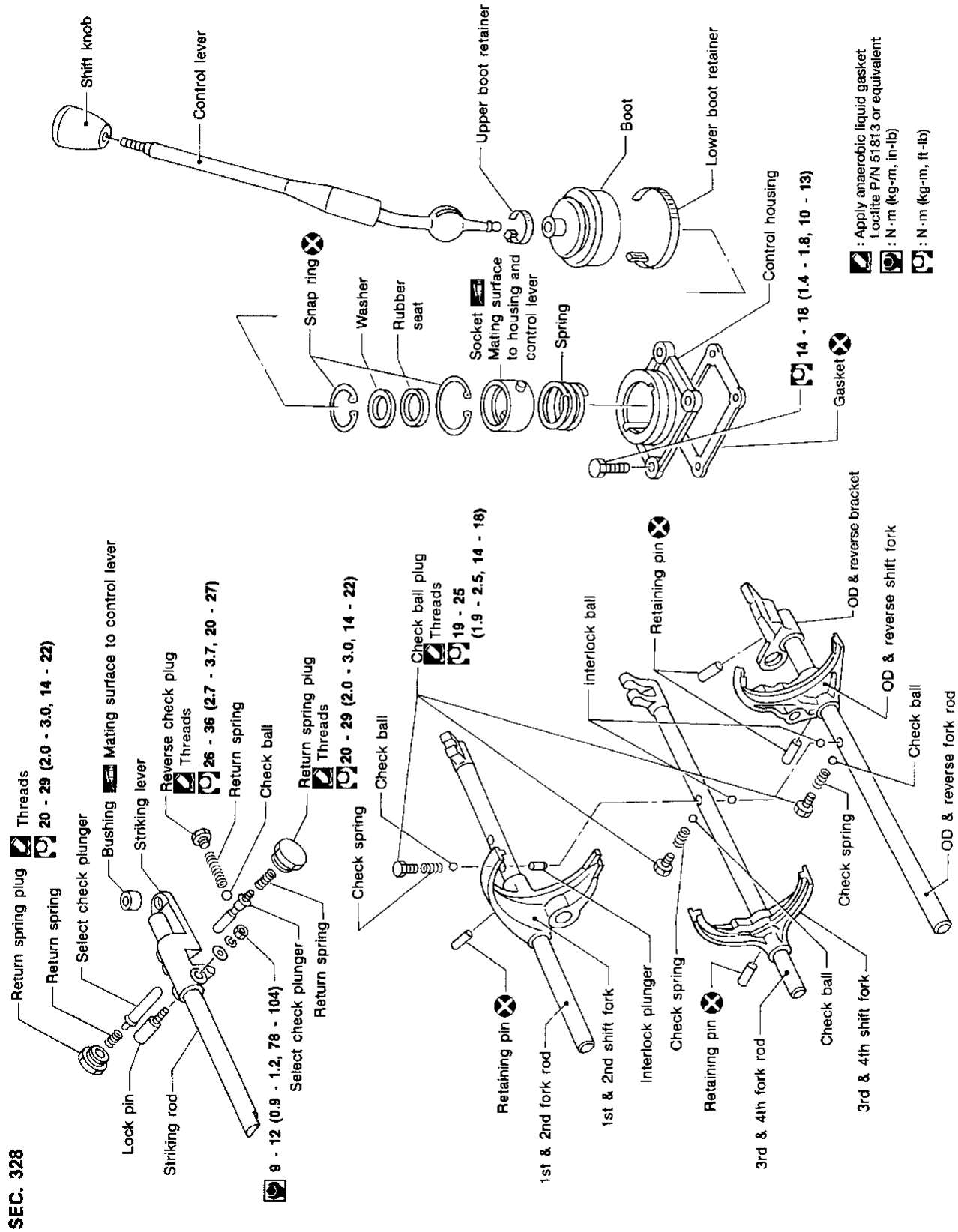

SEC. 328

AMT107

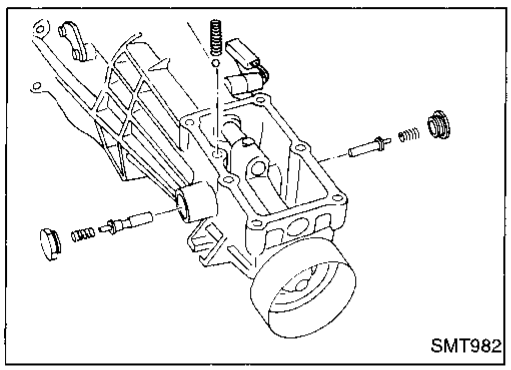

Case Components

1. Remove rear extension.

a. Remove control housing, check ball, return spring plugs, select check plungers and return springs. Also remove reverse check plug, check spring and check ball.

- **Be careful not to lose check balls.**

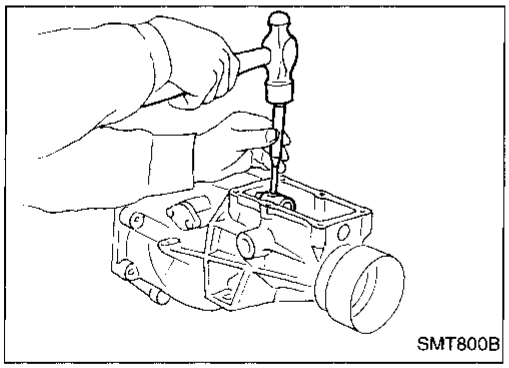

b. Drive out striking lever retaining pin.
c. Remove striking lever from striking rod.
d. Remove rear extension by lightly tapping on it.

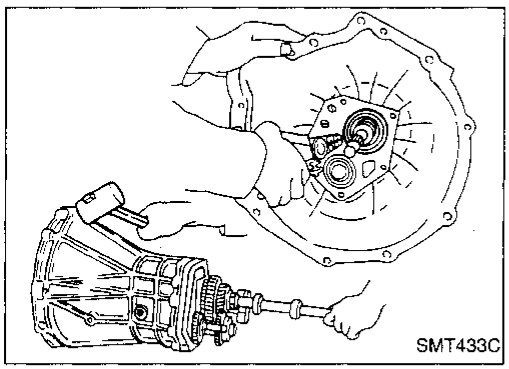

2. Remove front cover, gasket, countershaft front bearing shim and main drive gear ball bearing snap ring.
3. Separate transmission case from adapter plate by lightly tapping on it.

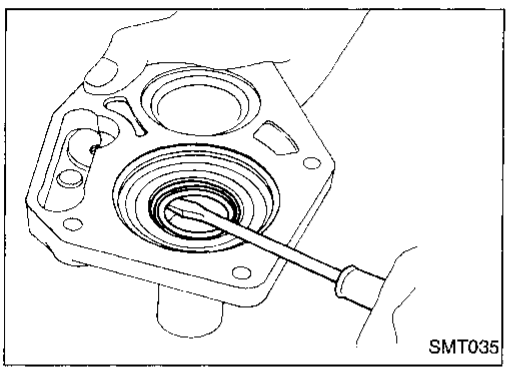

4. Remove oil seal from front cover.

- **Be careful not to damage mating surface of front cover.**

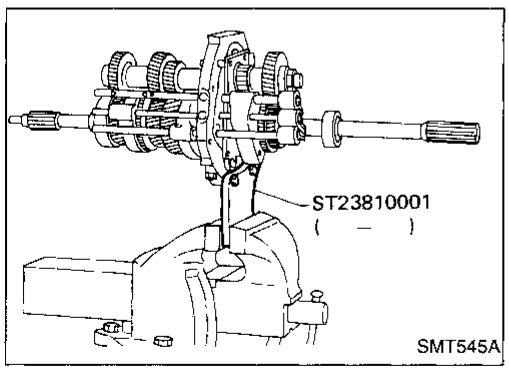

Shift Control Components

1. Set up Tool on adapter plate.
2. Remove striking rod from adapter plate.
3. Remove check ball plugs, check springs, and check balls.

Shift Control Components (Cont'd)

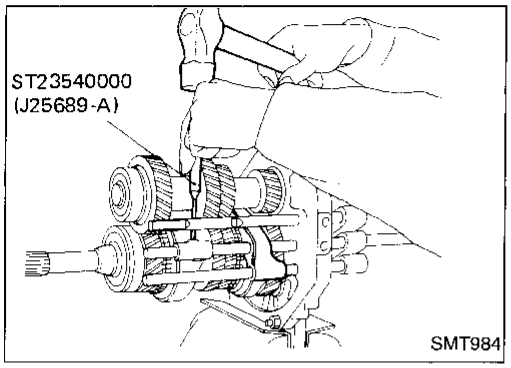

4. Drive out retaining pins. Then drive out fork rods and remove interlock balls.

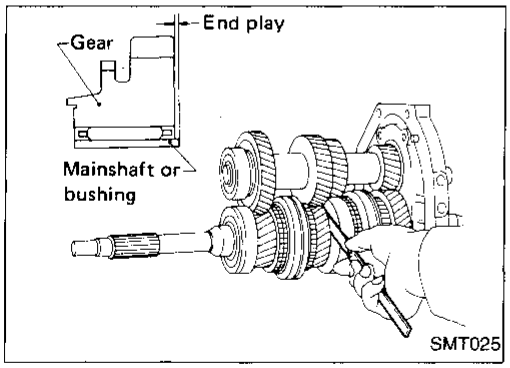

Gear Components

1. Before disassembly, measure the end play of each gear.
- If end play is not within the specified limit, disassemble and inspect the parts.
- Replace any part which is worn or damaged.

Gear end play:
Refer to SDS, MT-28.

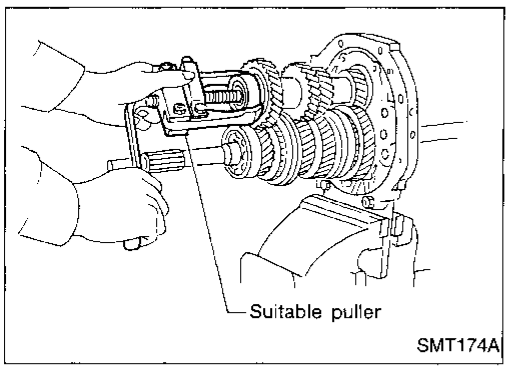

2. Mesh 2nd and reverse gear, then remove countershaft front bearing using a suitable puller.
3. Remove snap ring, then remove sub-gear bracket, sub-gear spring and sub-gear.

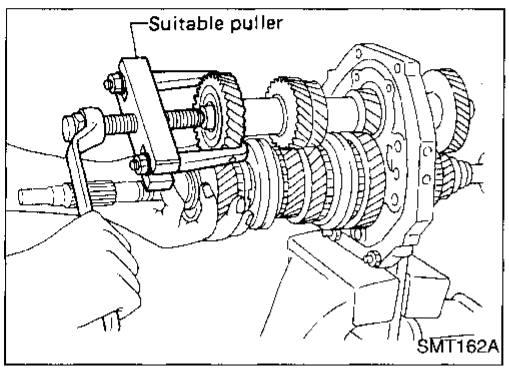

4. Remove counter drive gear together with main drive gear assembly using a suitable puller.
- **When removing main drive gear assembly, be careful not to drop pilot bearing or baulk ring.**

5. Remove snap ring, then remove 3rd & 4th synchronizer assembly and 3rd main gear.

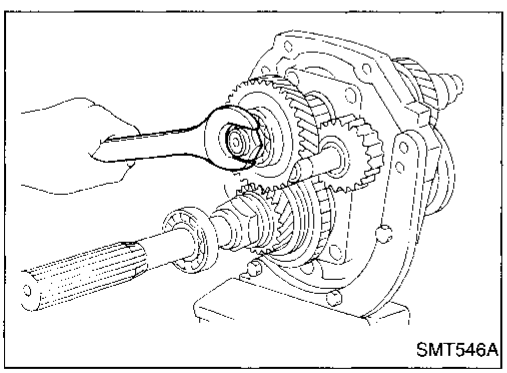

6. Disassemble parts at rear of adapter plate as follows:

a. Release staking on both countershaft and mainshaft nuts, then loosen both nuts.
Mainshaft nut: Left-hand thread

Gear Components (Cont'd)

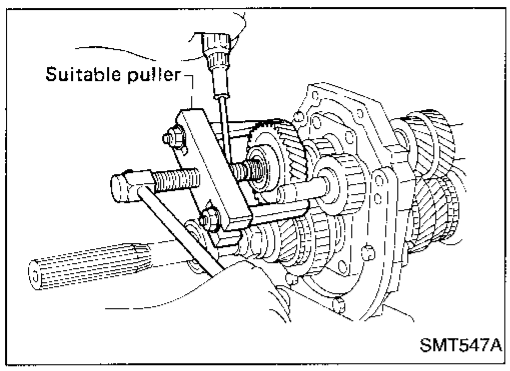

b. Remove overdrive counter gear together with countershaft rear end bearing using a suitable puller.
c. Remove reverse counter gear and spacer.
d. Remove snap rings from reverse idler shaft, then remove reverse idler gear, thrust washers and reverse idler gear bearing.

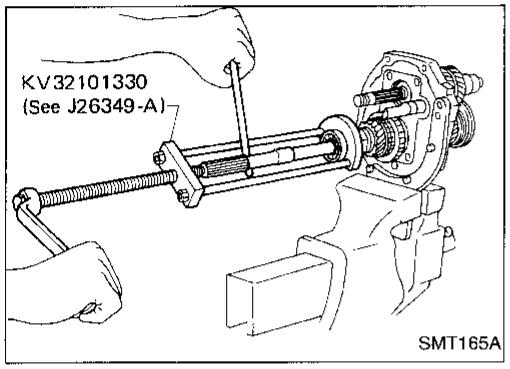

e. Remove snap ring and pull out overdrive mainshaft bearing, then remove snap ring. (2WD model)
f. Remove mainshaft nut.
g. Remove speedometer drive gear and steel ball. (2WD model)
h. Remove thrust washer, steel roller, roller bearing and washer.
i. Remove overdrive main gear, needle bearing and baulk ring (overdrive).
j. Remove counter gear by tapping on rear end of counter gear.
k. Press out overdrive gear bushing and overdrive & reverse synchronizer assembly.
l. Remove reverse main gear and needle bearing.
m. Press out reverse gear bushing.

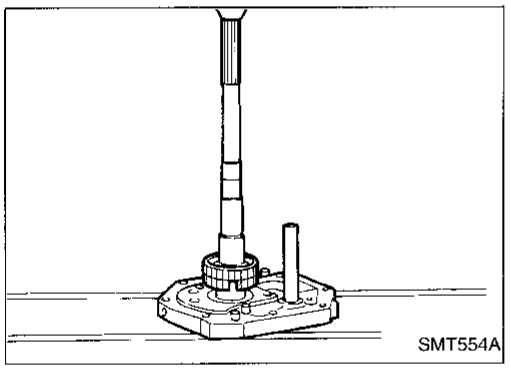

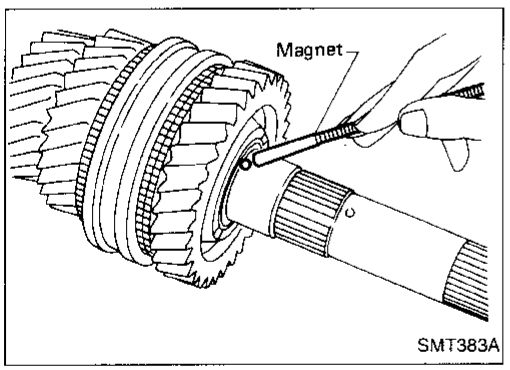

7. Remove thrust washer, steel ball, 1st main gear and needle bearing.
- **Be careful not to lose steel ball.**

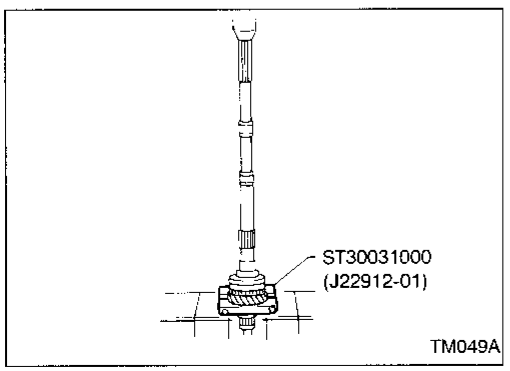

8. Press out 1st gear bushing together with 2nd main gear using Tool.
Remove 2nd gear needle bearing.

Gear Components (Cont'd)

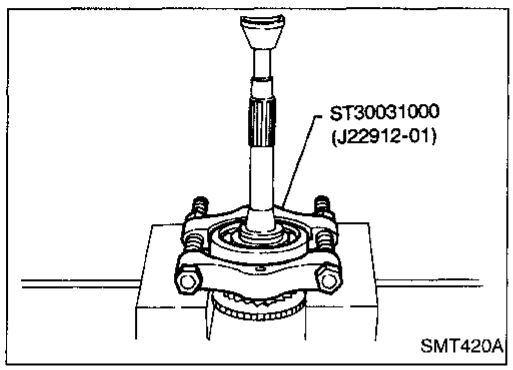

9. Remove main drive gear ball bearing.
a. Remove snap ring.
b. Remove main drive gear ball bearing.

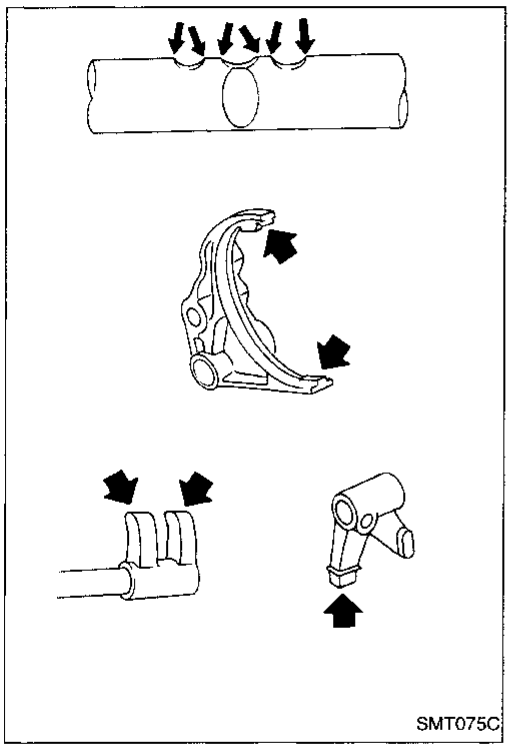

Shift Control Components

- Check contact and sliding surfaces of fork rods for wear, scratches, projections and other damage.

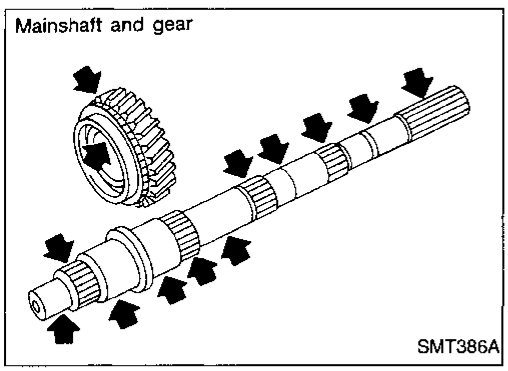

Gear Components

GEARS AND SHAFTS

- Check shafts for cracks, wear and bending.
- Check gears for excessive wear, chips and cracks.

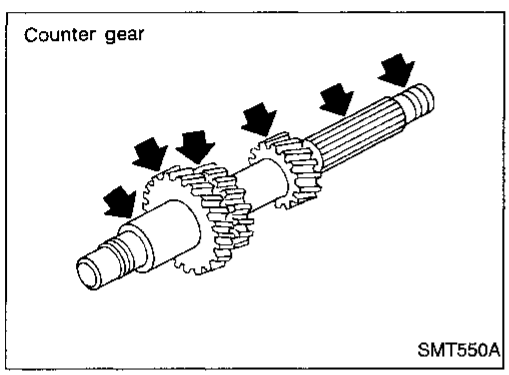

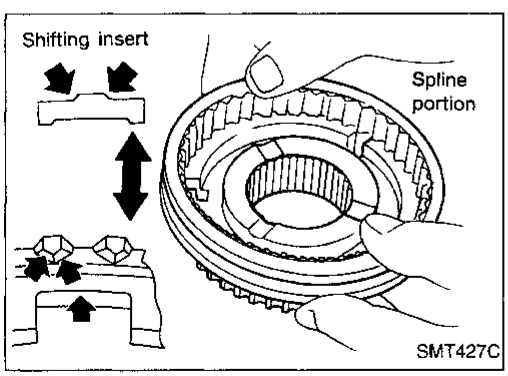

SYNCHRONIZERS

- Check spline portion of coupling sleeves, synchronizer hubs and gears for wear, chips and cracks.
- Check baulk rings for cracks and deformation.
- Check shifting inserts for wear and deformation.
- Check insert spread springs for deformation.

Gear Components (Cont'd)

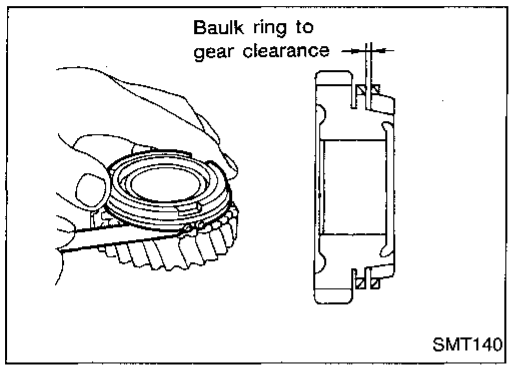

- Measure baulk ring wear.

a. Measure clearance between baulk ring and gear.

Clearance between baulk ring and gear:
Refer to SDS, MT-28.

- If the clearance is less than the wear limit, replace baulk ring.

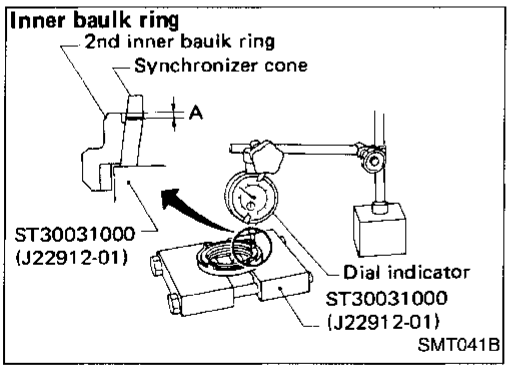

- Measure 2nd baulk ring wear—4WD model.

a. Place baulk rings in position on synchronizer cone.

b. While holding baulk rings against synchronizer cone as far as possible, measure dimensions "A" and "B".

Standard:
Inner "A": 0.7 - 0.9 mm (0.028 - 0.035 in)
Outer "B": 0.6 - 1.1 mm (0.024 - 0.043 in)
Wear limit:
0.2 mm (0.008 in)

c. If dimension "A" or "B" is less than the wear limit, replace baulk ring.

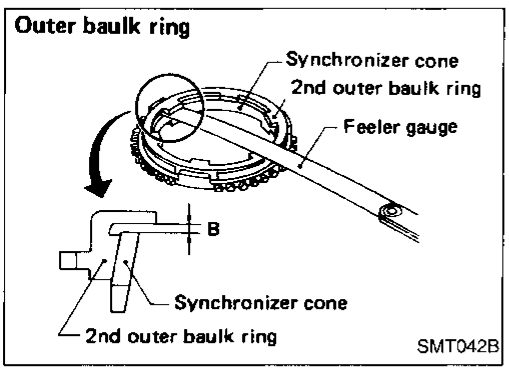

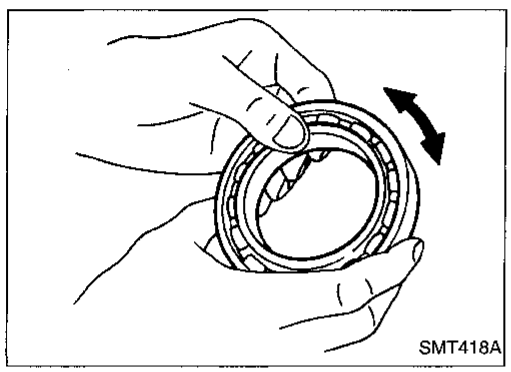

BEARINGS

- Make sure all bearings roll freely and are free from noise, cracks, pitting or wear.

Gear Components

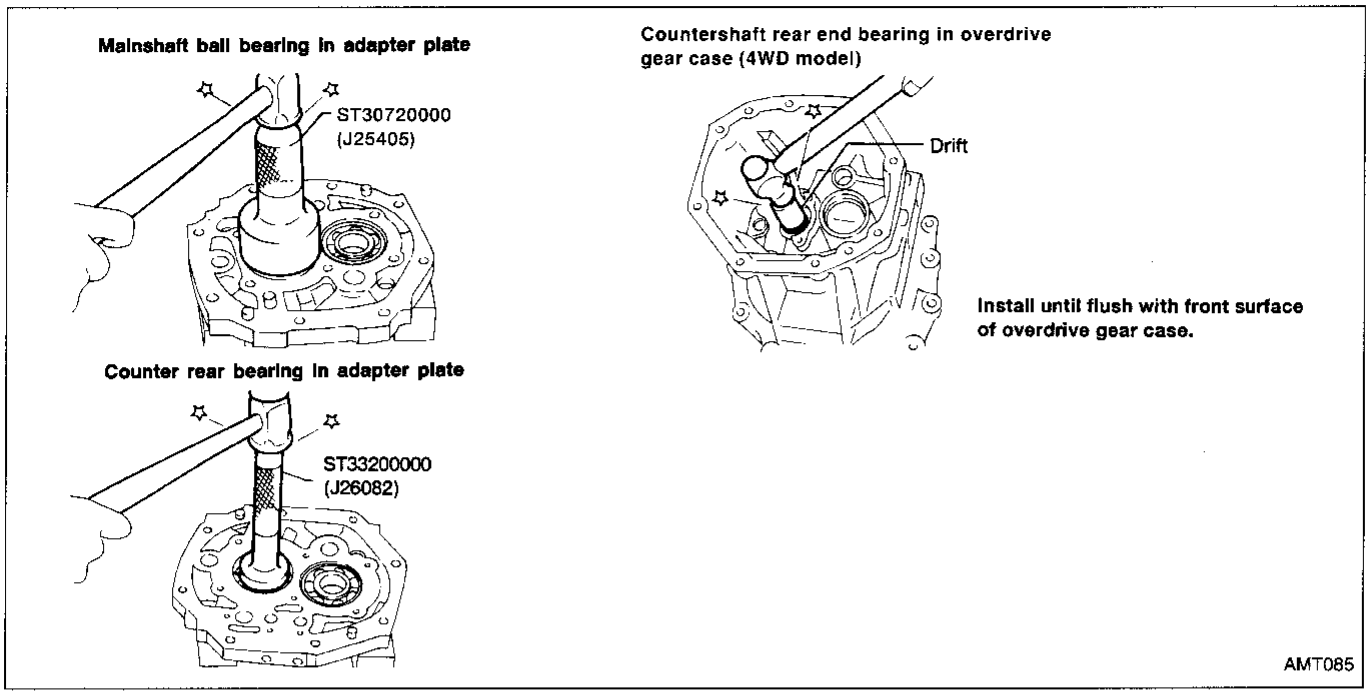

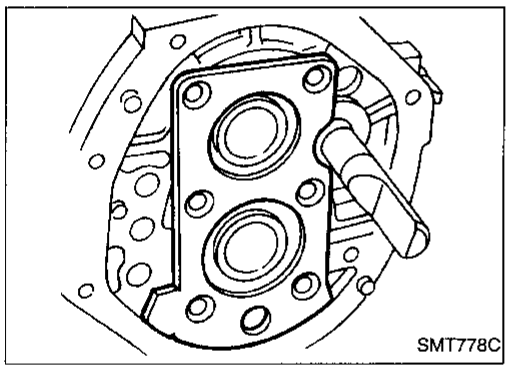

1. Install bearings into case components.
2. Assemble adapter plate parts.
- Install oil gutter on adapter plate and expand on rear side.
- Install bearing retainer.

a. Insert reverse idler shaft, then install bearing retainer.

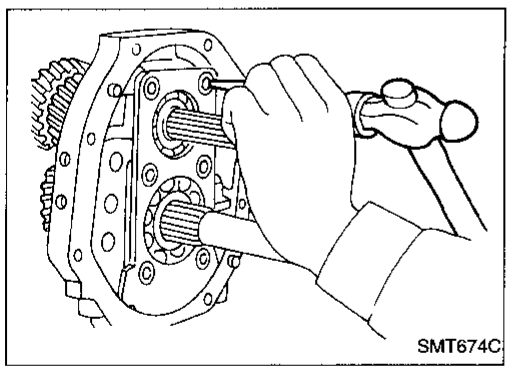

b. Tighten each screw, then stake each one at two points.

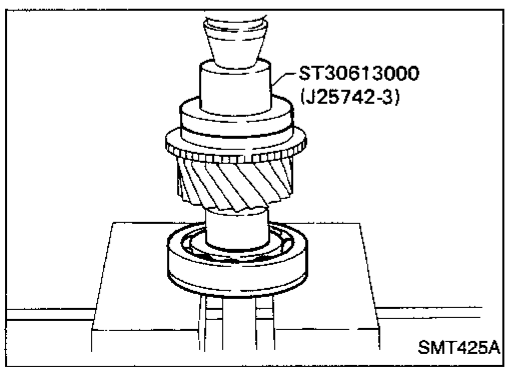

3. Install main drive gear ball bearing.

a. Press main drive gear ball bearing.

Gear Components (Cont'd)

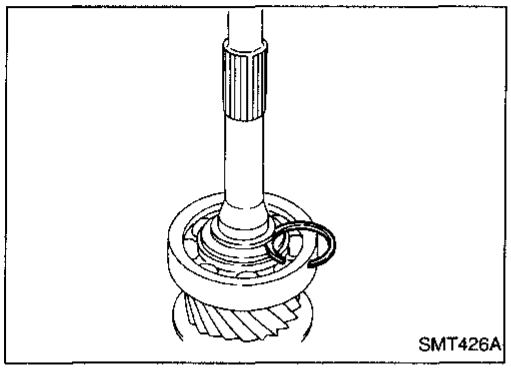

b. Select and install proper main drive gear snap ring to achieve proper clearance of groove.
   Allowable clearance of groove:
   0 - 0.13 mm (0 - 0.0051 in)
   Main drive gear snap ring:
   Refer to SDS, MT-28.

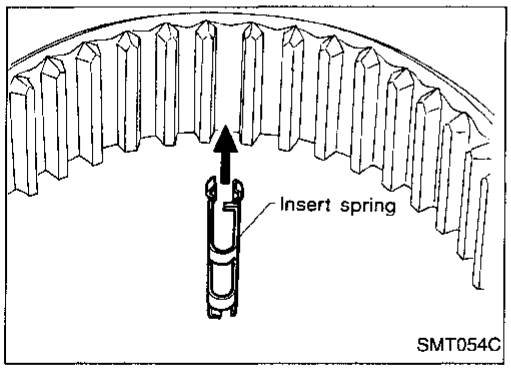

4. Assemble synchronizers.
- 1st and 2nd (2WD model) synchronizer

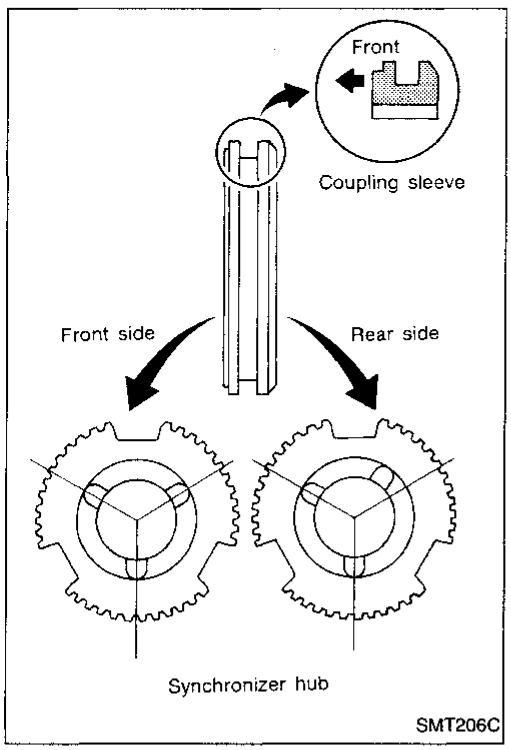

- **Check coupling sleeve and synchronizer hub orientation.**

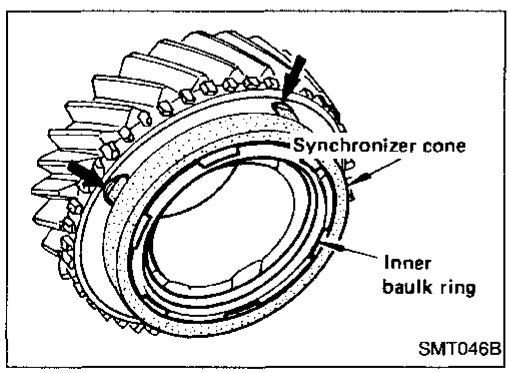

- 2nd double baulk ring type synchronizer (4WD model)

Gear Components (Cont'd)

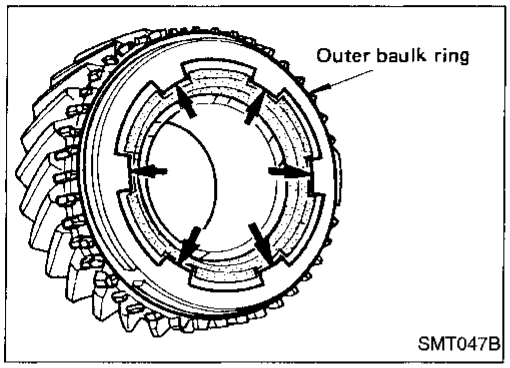

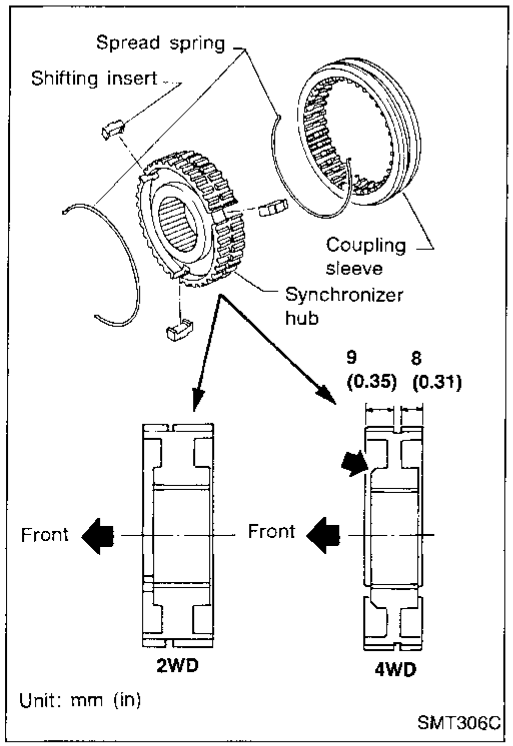

- 3rd & 4th synchronizer
- **The three synchronizer gutters should be at the rear.**

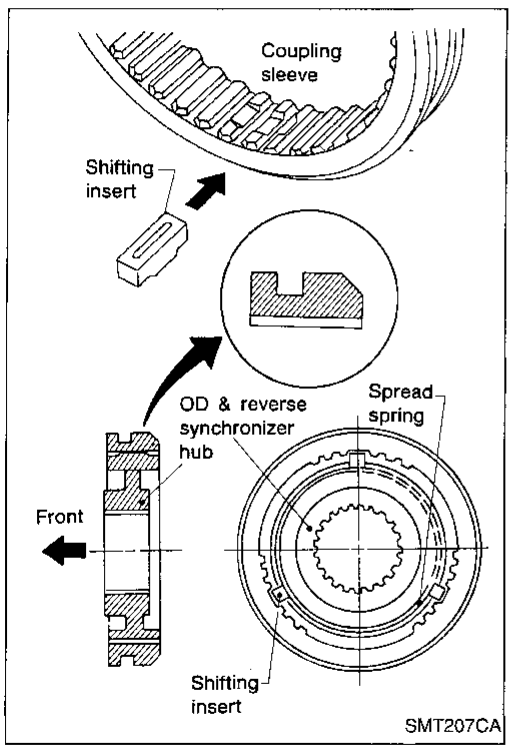

- Overdrive & reverse synchronizer

Gear Components (Cont'd)

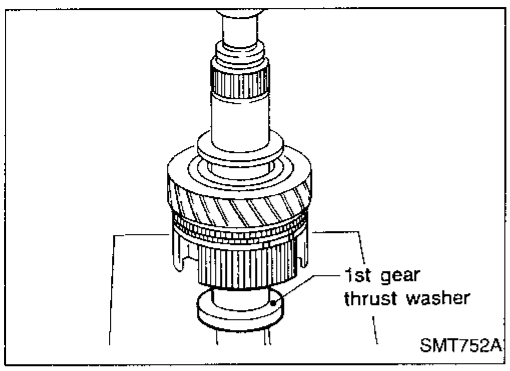

5. Assemble front side components to mainshaft.
a. Install 2nd main gear, needle bearing and 1st & 2nd synchronizer assembly, then press 1st gear bushing on mainshaft.
b. Install 1st main gear.

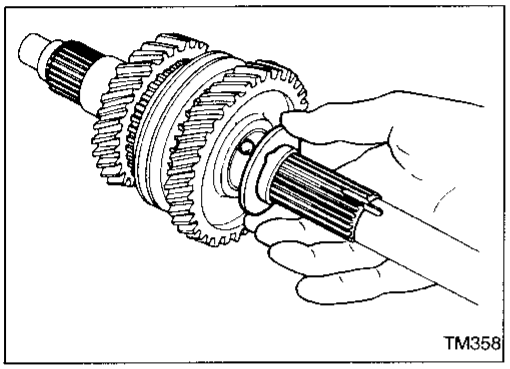

c. Install steel ball and 1st gear washer.
- **Before installation, apply multi-purpose grease to steel ball and to both sides of the 1st gear washer.**

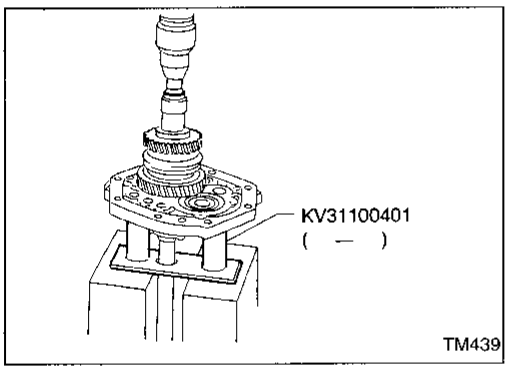

6. Install mainshaft and counter gear on adapter plate and main drive gear on mainshaft as follows:
a. Press mainshaft assembly into adapter plate using Tool.

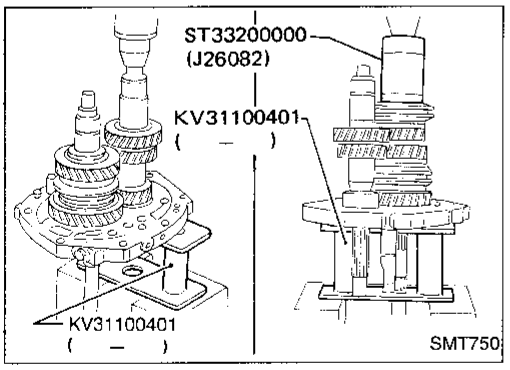

b. Press counter gear into adapter plate using Tool.
c. Install 3rd main gear and needle bearing, then press 3rd & 4th synchronizer assembly onto mainshaft.
- **Pay attention to the direction of 3rd & 4th synchronizer.**

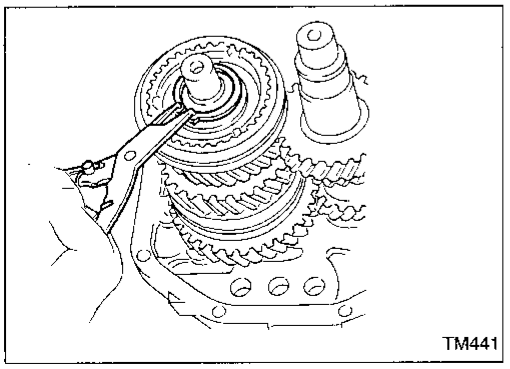

d. Install front mainshaft snap ring.
Select proper front mainshaft snap ring to achieve proper clearance of groove.
Allowable clearance of groove:
0 - 0.18 mm (0 - 0.0071 in)
Mainshaft front snap ring:
Refer to SDS, MT-28.
e. Apply gear oil to mainshaft pilot bearing and install it on mainshaft.

Gear Components (Cont'd)

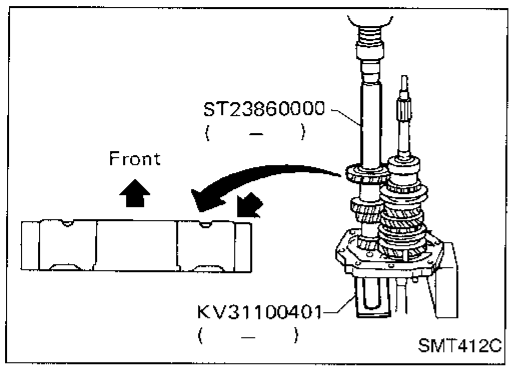

f. Press counter drive gear together with main drive gear using Tool.

- **Pay attention to the direction of counter drive gear.**

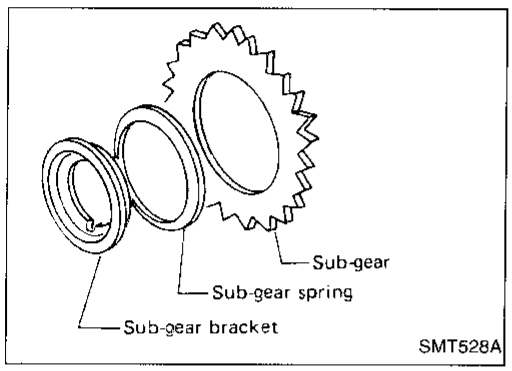

g. Install sub-gear components.

(1) Install sub-gear and sub-gear bracket on counter drive gear, then select proper snap ring to achieve proper clearance of groove.

Allowable clearance of groove:
0 - 0.18 mm (0 - 0.0071 in)
Counter drive gear snap ring:
Refer to SDS, MT-28.

(2) Remove snap ring, sub-gear bracket and sub-gear from counter gear.

(3) Reinstall sub-gear, sub-gear spring and sub-gear bracket.

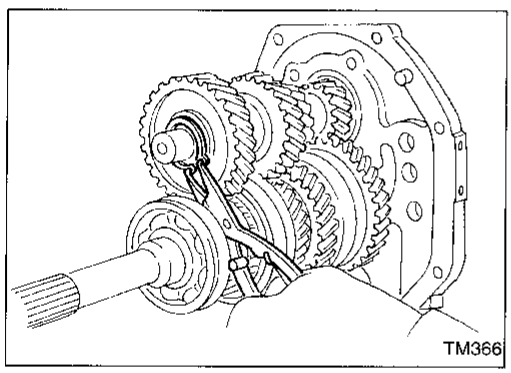

h. Install selected counter drive gear snap ring.

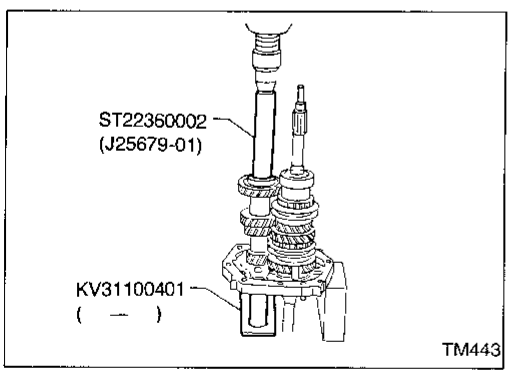

i. Press countershaft front bearing onto counter gear using Tool.

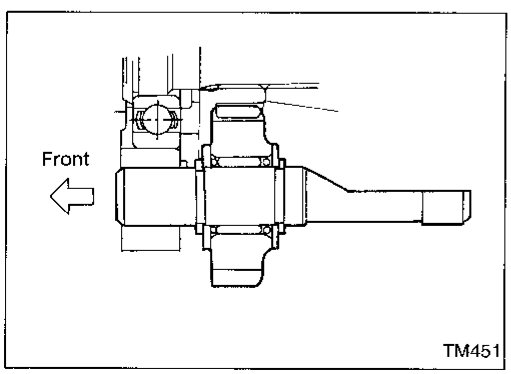

7. Install rear side components on mainshaft and counter gear as follows:

a. Install reverse idler gear to reverse idler shaft along with spacers, snap rings and reverse idler gear bearing.

Gear Components (Cont'd)

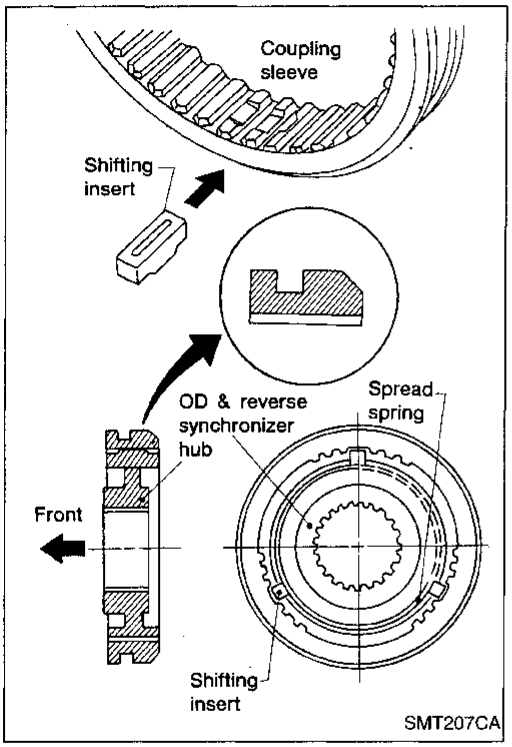

b. Install bushing, reverse main gear and overdrive & reverse synchronizer to mainshaft.

- **Pay attention to the direction of synchronizer hub.**

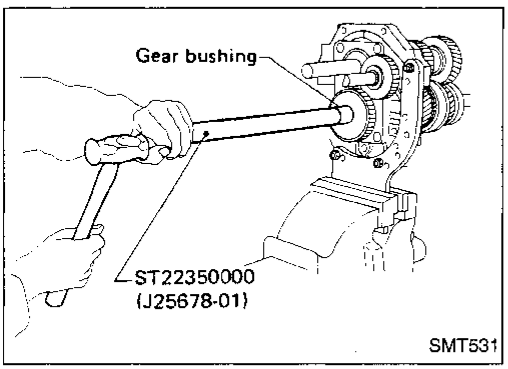

c. Install overdrive gear bushing to mainshaft using Tool.
d. Install overdrive main gear and needle bearing to mainshaft.
e. Install spacer, reverse counter gear and overdrive counter gear to countershaft.

- **OD main gear and OD counter gear should be handled as a matched set.**

f. Install washer, roller bearing, steel roller and thrust washer.
g. Tighten mainshaft lock nut temporarily.

- **Always use new lock nut.**

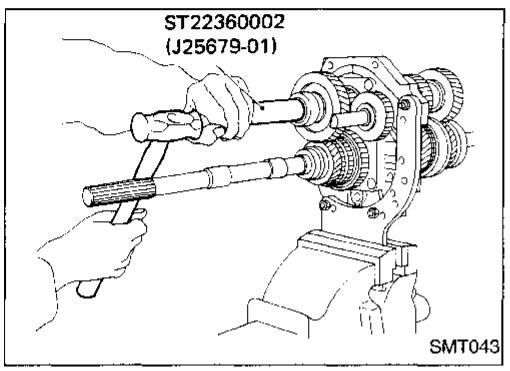

h. Install countershaft rear end bearing using Tool.

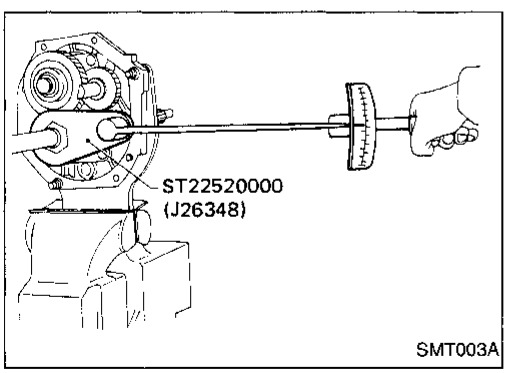

8. Mesh 2nd and reverse gears, then tighten mainshaft lock nut using Tool.

- **Always use new lock nut.**
  Mainshaft lock nut:
  [O]: 137 - 167 N·m (14.0 - 17.0 kg-m, 101 - 123 ft-lb)

Gear Components (Cont'd)

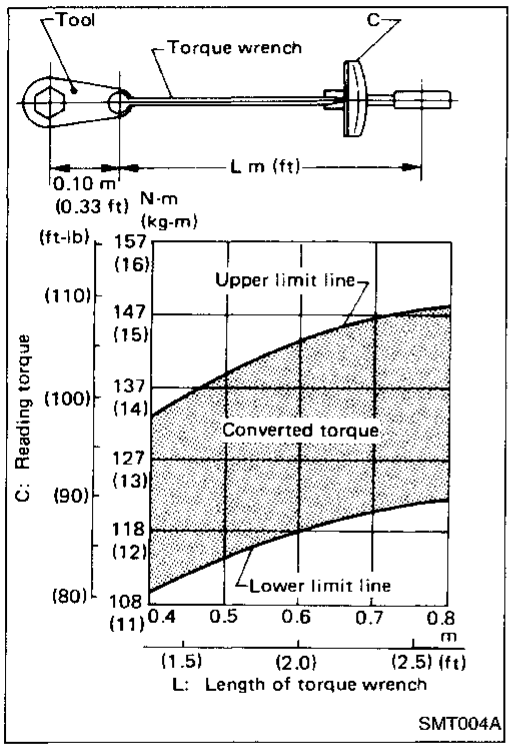

- Use the chart shown at left to determine the proper reading torque.
  (Length of torque wrench vs. setting or reading torque)

9. Tighten countershaft lock nut.

- **Always use new lock nut.**
  Countershaft lock nut:
  [O]: 98 - 127 N·m (10.0 - 13.0 kg-m, 72 - 94 ft-lb)

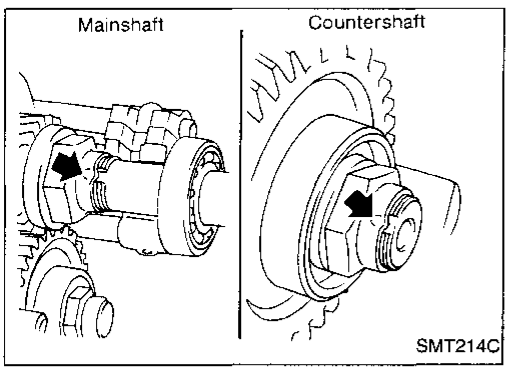

10. Stake mainshaft lock nut and countershaft lock nut using a punch.
11. Measure gear end play. Refer to "Gear Components", "DISASSEMBLY", MT-12.

Shift Control Components

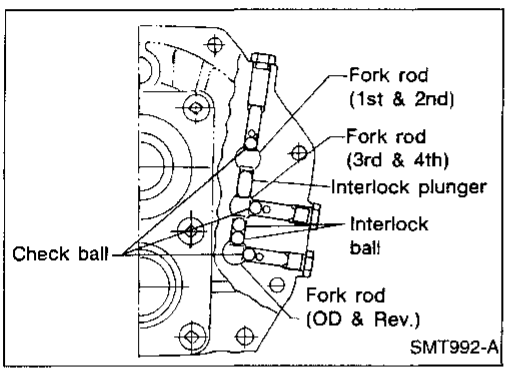

1. Install fork rods, interlock plunger, interlock balls and check balls.

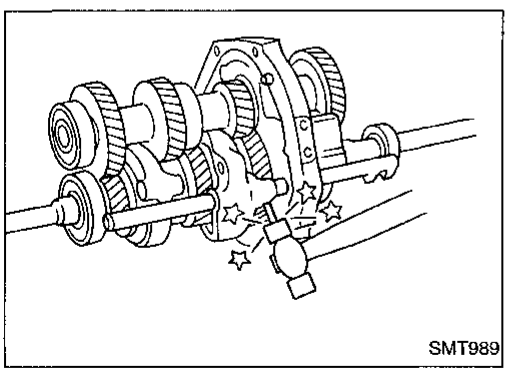

2. Install 1st & 2nd shift fork, then drive in retaining pin.

Shift Control Components (Cont'd)

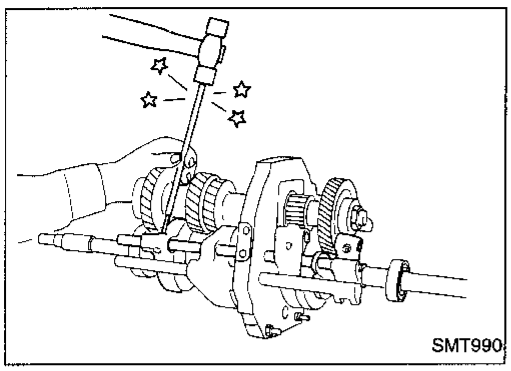

3. Install 3rd & 4th shift fork, then drive in retaining pin.

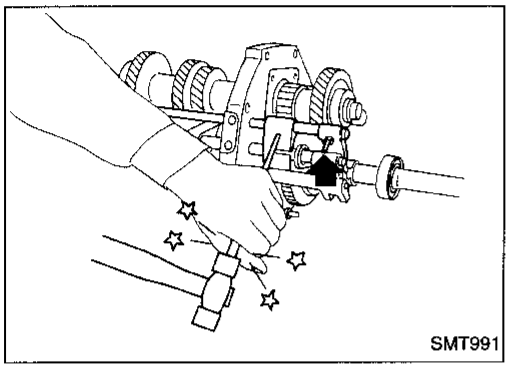

4. Install overdrive & reverse shift fork, then drive in retaining pin.

Case Components

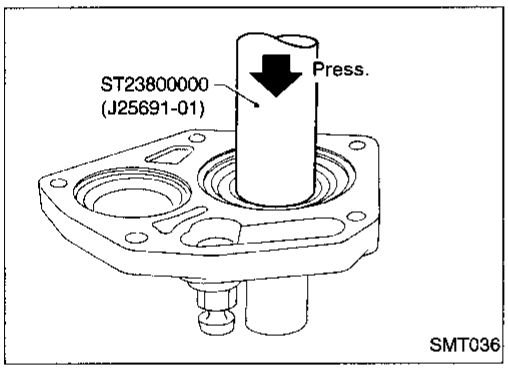

1. Install front cover oil seal using Tool.
- **Apply multi-purpose grease to seal lip.**

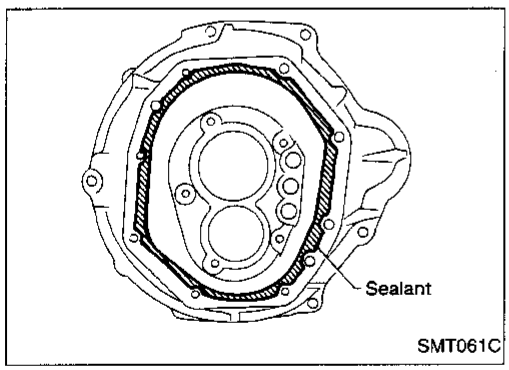

2. Apply sealant to mating surface of transmission case as shown at left.
- **Use anaerobic liquid gasket Loctite P/N 51813 or equivalent.**

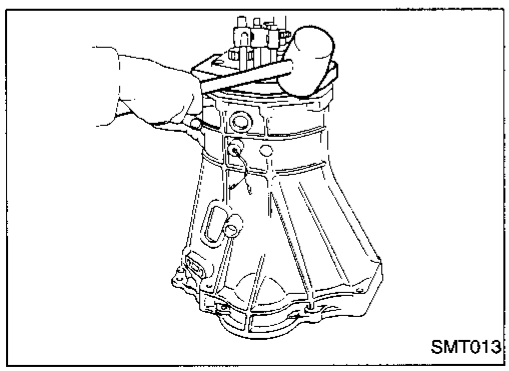

3. Slide gear assembly onto adapter plate by lightly tapping it using a soft hammer.

Case Components (Cont'd)

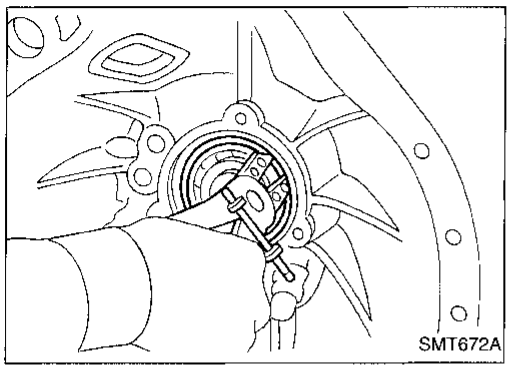

4. Install main drive gear ball bearing snap ring.

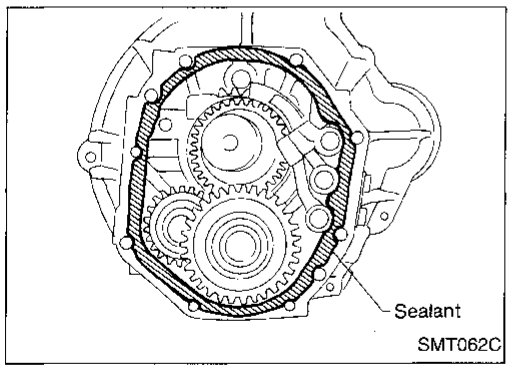

5. Apply sealant to mating surface of adapter plate as shown at left.
- **Use anaerobic liquid gasket Loctite P/N 51813 or equivalent.**

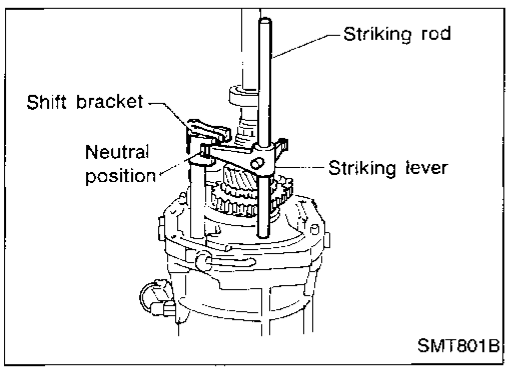

6. Place shift forks in neutral position.
7. Install striking lever and rod onto adapter plate and align striking lever with shift brackets.

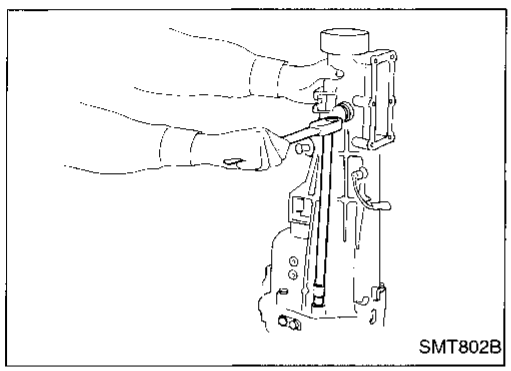

8. Install rear extension.
9. Fit main drive bearing snap ring.

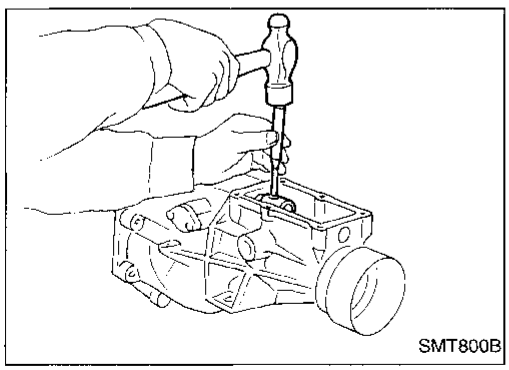

10. Install striking rod lock pin.

Case Components (Cont'd)

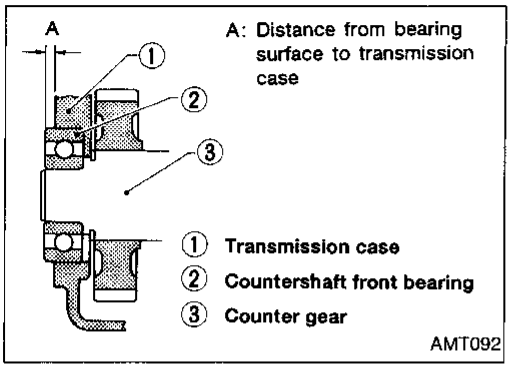

11. Select countershaft front bearing shim.
    Countershaft front bearing shim:
    Refer to SDS, MT-29.
12. Install gasket and front cover.

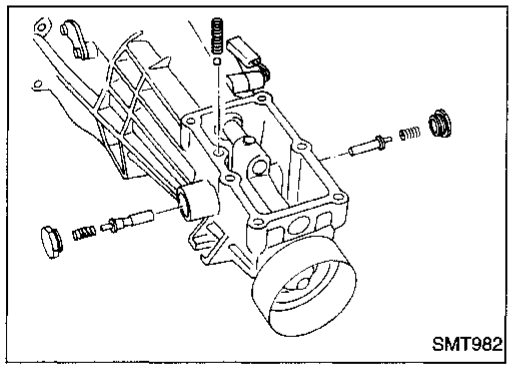

13. Install return spring plugs, check ball, return springs and select check plungers.
14. Install control housing and gasket.

General Specifications

Applied model	2WD	4WD
Transmission	FS5W71C	
Number of speed	5	
Shift pattern		
Synchromesh type	Warner	
Gear ratio		
1st	3.321	3.985
2nd	1.902	2.246
3rd	1.308	1.415
4th	1.000	1.000
OD	0.838	0.821
Reverse	3.382	3.657
Number of teeth		
Mainshaft		
Drive	22	21
1st	33	34
2nd	27	28
3rd	26	26
OD	22	21
Reverse	36	36
Countershaft		
Drive	31	32
1st	14	13
2nd	20	19
3rd	28	28
OD	37	39
Reverse	15	15
Reverse idler gear	21	21
Oil capacity ℓ (US pt, Imp pt)	2.0 (4-1/4, 3-1/2)	4.9 (10-3/8, 8-5/8)
Remarks	Reverse synchronizer	
	—	2nd double baulk ring type synchronizer

Inspection and Adjustment

GEAR END PLAY

Unit: mm (in)

1st gear	0.31 - 0.41 (0.0122 - 0.0161)
2nd gear	0.11 - 0.21 (0.0043 - 0.0083)
3rd gear	0.11 - 0.21 (0.0043 - 0.0083)
Overdrive gear	0.24 - 0.41 (0.0094 - 0.0161)

CLEARANCE BETWEEN BAULK RING AND GEAR

Unit: mm (in)

Standard	
1st & 2nd (2WD)	1.20 - 1.60 (0.0472 - 0.0630)
3rd & main drive	1.20 - 1.60 (0.0472 - 0.0630)
Overdrive	1.20 - 1.60 (0.0472 - 0.0630)
Reverse	1.10 - 1.55 (0.0433 - 0.0610)
Wear limit	
1st & 2nd (2WD)	0.80 (0.0315)
3rd & main drive	0.80 (0.0315)
Overdrive	0.80 (0.0315)
Reverse	0.70 (0.0276)

2nd baulk ring (4WD model)

Unit: mm (in)

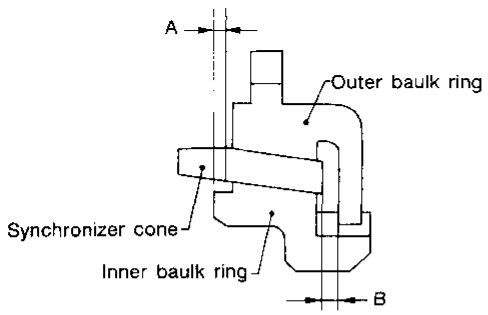

SMT733C

Dimension	Standard	Wear limit
A	0.7 - 0.9 (0.028 - 0.035)	0.2 (0.008)
B	0.6 - 1.1 (0.024 - 0.043)	

AVAILABLE SNAP RINGS

Main drive gear bearing

Allowable clearance	0 - 0.13 mm (0 - 0.0051 in)
Thickness mm (in)	Part number
1.87 (0.0736)	32204-78001
1.94 (0.0764)	32204-78002
2.01 (0.0791)	32204-78003

Mainshaft front

Allowable clearance	0 - 0.18 mm (0 - 0.0071 in)
Thickness mm (in)	Part number
2.4 (0.094)	32263-V5200
2.5 (0.098)	32263-V5201

Mainshaft rear end bearing (2WD model)

Allowable clearance	0 - 0.14 mm (0 - 0.0055 in)
Thickness mm (in)	Part number
1.1 (0.043)	32228-20100
1.2 (0.047)	32228-20101
1.3 (0.051)	32228-20102
1.4 (0.055)	32228-20103

Counter drive gear

Allowable clearance	0 - 0.18 mm (0 - 0.0071 in)
Thickness mm (in)	Part number
1.4 (0.055)	32215-E9000
1.5 (0.059)	32215-E9001
1.6 (0.063)	32215-E9002

AVAILABLE SHIMS

Countershaft front bearing

Unit: mm (in)

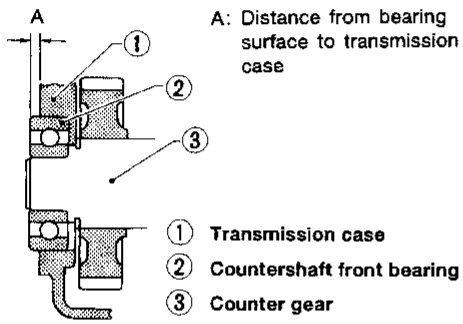

AMT092

"A"	Thickness of shim	Part number
4.52 - 4.71 (0.1780 - 0.1854)	Not necessary	
4.42 - 4.51 (0.1740 - 0.1776)	0.1 (0.004)	32218-V5000
4.32 - 4.41 (0.1701 - 0.1736)	0.2 (0.008)	32218-V5001
4.22 - 4.31 (0.1661 - 0.1697)	0.3 (0.012)	32218-V5002
4.12 - 4.21 (0.1622 - 0.1657)	0.4 (0.016)	32218-V5003
4.02 - 4.11 (0.1583 - 0.1618)	0.5 (0.020)	32218-V5004
3.92 - 4.01 (0.1543 - 0.1579)	0.6 (0.024)	32218-V5005

SECTION AT

CONTENTS

PREPARATION AND PRECAUTIONS 2
Special Service Tools 2
Precautions For Supplemental Restraint System (SRS) "AIR BAG" 4
Precautions 4
OVERALL SYSTEM 5
Circuit Diagram 5
Wiring Diagram 6
Cross-Sectional View 8
Hydraulic Control Circuits 9
Shift Mechanism 10
TROUBLE DIAGNOSIS — Basic Inspection 12
Remarks 12
A/T Fluid Check 12
Road Test 12
Shift Schedule 14
TROUBLE DIAGNOSIS — General Description 16
Symptom Chart 16
TROUBLE DIAGNOSIS FOR DTC P1550 20
Torque Converter Clutch Solenoid Valve 20
TROUBLE DIAGNOSES 22
Component Inspection 22
Final Check 25
TROUBLE DIAGNOSES — A/T Shift Lock System 30
Description 30
Shift Lock System Electrical Parts Location 30
Wiring Diagram 31
Diagnostic Procedure 32
Key Interlock Cable 34
Component Check 35
ON-VEHICLE SERVICE 37
Control Valve Assembly and Accumulators Inspection 37
Rear Oil Seal Replacement 37
Parking Components Inspection 38
Governor Valve 38
Throttle Wire Adjustment 38
Inhibitor Switch Adjustment 39
Manual Control Linkage Adjustment 39
REMOVAL AND INSTALLATION 40
Removal 40
Installation 41
MAJOR OVERHAUL 42
Oil Channel 44
Locations of Needle Bearings, Thrust Washers and Snap Rings 45
DISASSEMBLY 46
Disassembly 46
REPAIR FOR COMPONENT PARTS 57
Oil Pump 57
Control Valve Assembly 61
Control Valve Upper Body 66
Control Valve Lower Body 70
Governor Valve Assembly 72
Parking Gear 72
Reverse Clutch 73
High Clutch 77
Forward and Overrun Clutches 79
Low & Reverse Brake 83
Forward Clutch Drum Assembly 86
Rear Internal Gear and Forward Clutch Hub 88
Band Servo Piston Assembly 90
Parking Pawl Components 94
ASSEMBLY 96
Assembly (1) 96
Adjustment 104
Assembly (2) 106
SERVICE DATA AND SPECIFICATIONS (SDS) 113
General Specifications 113
Specifications and Adjustment 113
Vehicle Speed When Shifting Gears 113
Vehicle Speed When Performing And Releasing Lock-Up 113
Stall Revolution 113
Line Pressure 113
Return Springs 114
Accumulator O-Ring 114
Clutches And Brakes 115
Oil Pump And Low One-Way Clutch 116

CONTENTS (Cont'd.)

Total End Play 116
Parking Gear 116
Reverse Clutch Drum End Play 116
Removal And Installation 116

When you read wiring diagrams:
- **Read GI section, "HOW TO READ WIRING DIAGRAMS".**
- **See EL section, "POWER SUPPLY ROUTING" for power distribution circuit.**

When you perform trouble diagnoses, read GI section, "HOW TO FOLLOW FLOW CHART IN TROUBLE DIAGNOSES".

Special Service Tools

The actual shapes of Kent-Moore tools may differ from those of special service tools illustrated here.

Tool number (Kent-Moore No.) Tool name	Description	
(J34301-C) Oil pressure gauge set ① (J34301-1) Oil pressure gauge ② (J34301-2) Hose ③ (J34298) Joint pipe ④ (J34282-2) Adapter ⑤ (790-301-1230-A) 60° Adapter ⑥ (J34301-15) Square socket	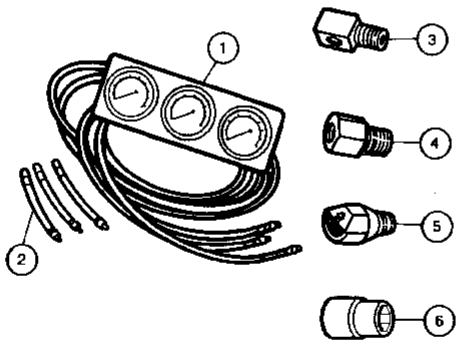 AAT546	Measuring line pressure and governor pressure
ST07870000 (J37068) Transmission case stand	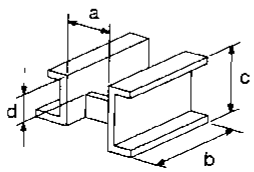 NT421	Disassembling and assembling A/T **a: 182 mm (7.17 in)** **b: 282 mm (11.10 in)** **c: 230 mm (9.06 in)** **d: 100 mm (3.94 in)**
KV31102100 (J37065) Torque converter one-way clutch check tool	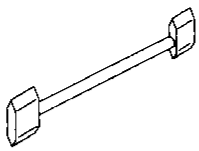 NT098	Checking one-way clutch in torque converter
ST25850000 (J25721-A) Sliding hammer	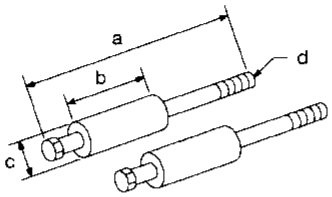 NT422	Removing oil pump assembly **a: 179 mm (7.05 in)** **b: 70 mm (2.76 in)** **c: 40 mm (1.57 in) dia.** **d: M12 x 1.75P**
KV31102400 (J34285 and J34285-87) Clutch spring compressor	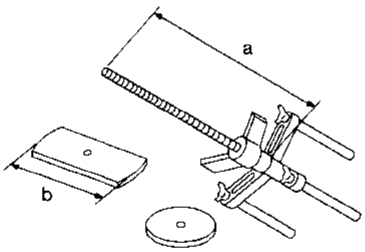 NT423	Removing and installing clutch return springs **a: 320 mm (12.60 in)** **b: 174 mm (6.85 in)**

Special Service Tools (Cont'd)

Tool number (Kent-Moore No.) Tool name	Description	
ST33200000 (J26082) Drift	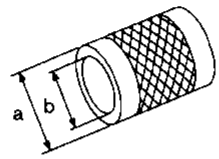 NT091	Installing oil pump housing oil seal Installing rear oil seal **a: 60 mm (2.36 in) dia.** **b: 44.5 mm (1.752 in) dia.**
ST30720000 (J34331) Drift	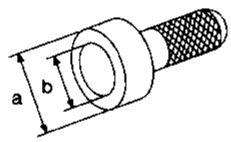 NT115	Installing rear oil seal **a: 77 mm (3.03 in) dia.** **b: 55.5 mm (2.185 in) dia.**
(J34291) Shim setting gauge set	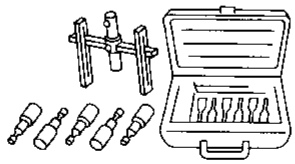 NT101	Selecting oil pump cover bearing race and oil pump thrust washer

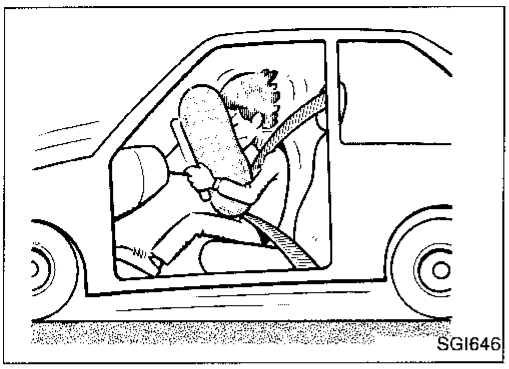

Precautions For Supplemental Restraint System (SRS) "AIR BAG"

The Supplemental Restraint System "Air Bag", used along with a seat belt, helps to reduce the risk or severity of injury to the driver in a frontal collision. The Supplemental Restraint System consists of an air bag module (located in the center of the steering wheel), a diagnosis sensor unit, warning lamp, wiring harness, a crash zone sensor (4WD models) and spiral cable. Information necessary to service the system safely is included in the **RS section** of this Service Manual.

WARNING:

- **To avoid rendering the SRS inoperative, which could increase the risk of personal injury or death in the event of a collision which would result in air bag inflation, all maintenance must be performed by an authorized NISSAN dealer.**
- **Improper maintenance, including incorrect removal and installation of the SRS, can lead to personal injury caused by unintentional activation of the system.**
- **Do not use electrical test equipment on any circuit related to the SRS unless instructed to in this Service Manual. SRS wiring harnesses are covered with yellow insulation either just before the harness connectors or for the complete harness, for easy identification.**

Precautions

- Before proceeding with disassembly, thoroughly clean the outside of the transmission. It is important to prevent the internal parts from becoming contaminated by dirt or other foreign matter.
- Disassembly should be done in a clean work area.
- Use lint-free cloth or towels for wiping parts clean. Common shop rags can leave fibers that could interfere with the operation of the transmission.
- Place disassembled parts in order for easier and proper assembly.
- All parts should be carefully cleaned with a general purpose, non-flammable solvent before inspection or reassembly.
- Gaskets, seals and O-rings should be replaced anytime the transmission is disassembled.
- The valve body contains precision parts and requires extreme care when parts are removed and serviced. Place removed parts in order, on a parts rack, so they can be put back in the valve body in the same positions and sequences. Care will also prevent springs and small parts from becoming scattered or lost.
- Properly installed valves, sleeves, plugs, etc. will slide along their bores in the valve body under their own weight.
- Before assembly, apply a coat of recommended ATF to all parts. Apply petroleum jelly to protect O-rings and seals, or hold small bearings and washers in place during assembly. Do not use grease.
- Extreme care should be taken to avoid damage to O-rings, seals and gaskets when assembling.
- Replace ATF cooler if excessive foreign material is found in oil pan or clogging strainer.
- After overhaul, refill the transmission with new ATF.
- When the A/T drain plug is removed, only some of the fluid is drained. Old A/T fluid will remain in torque converter and ATF cooling system. Always follow the procedures under "Changing A/T Fluid" in the MA section when changing A/T fluid.

Circuit Diagram

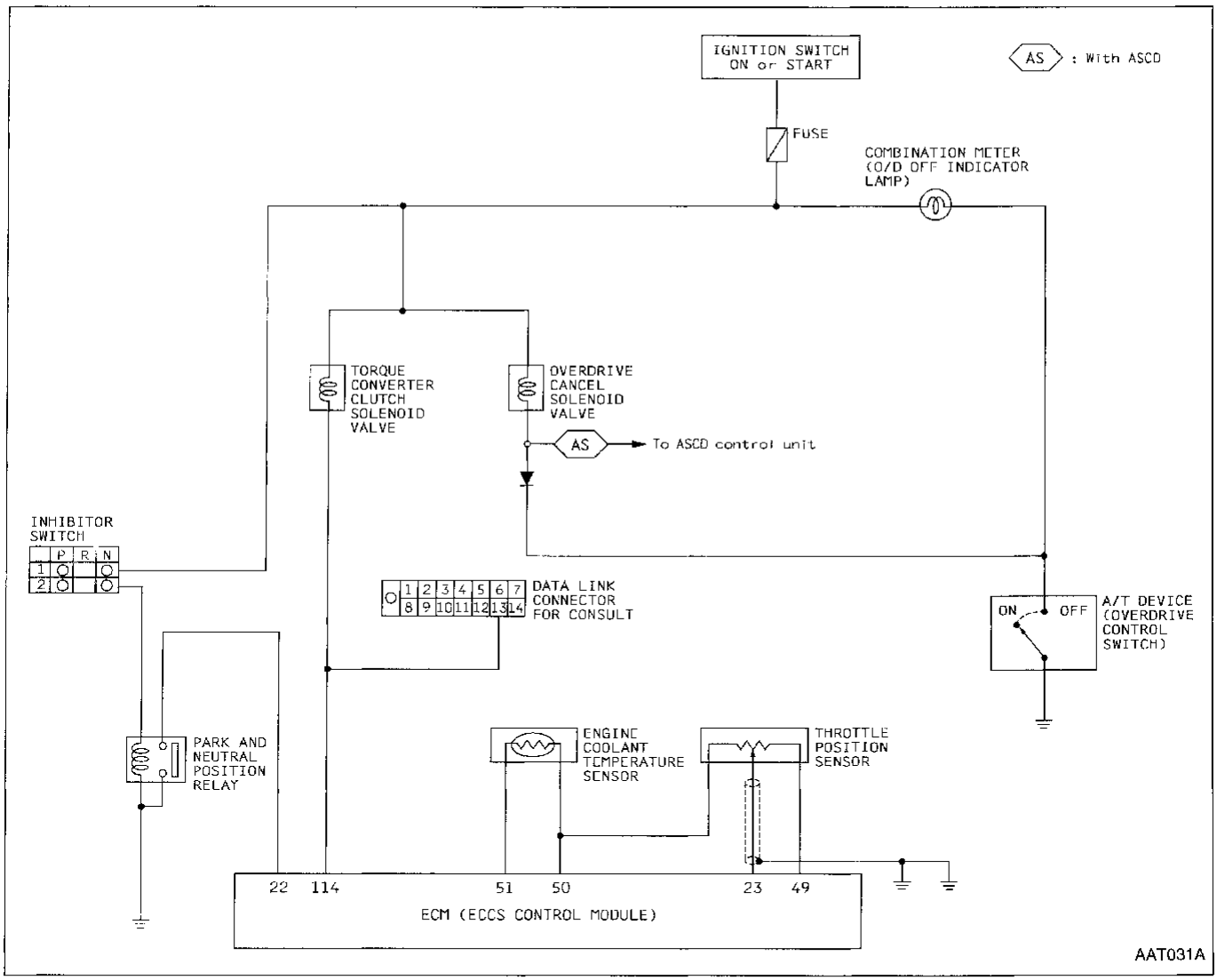

Wiring Diagram

AT-A/T-01

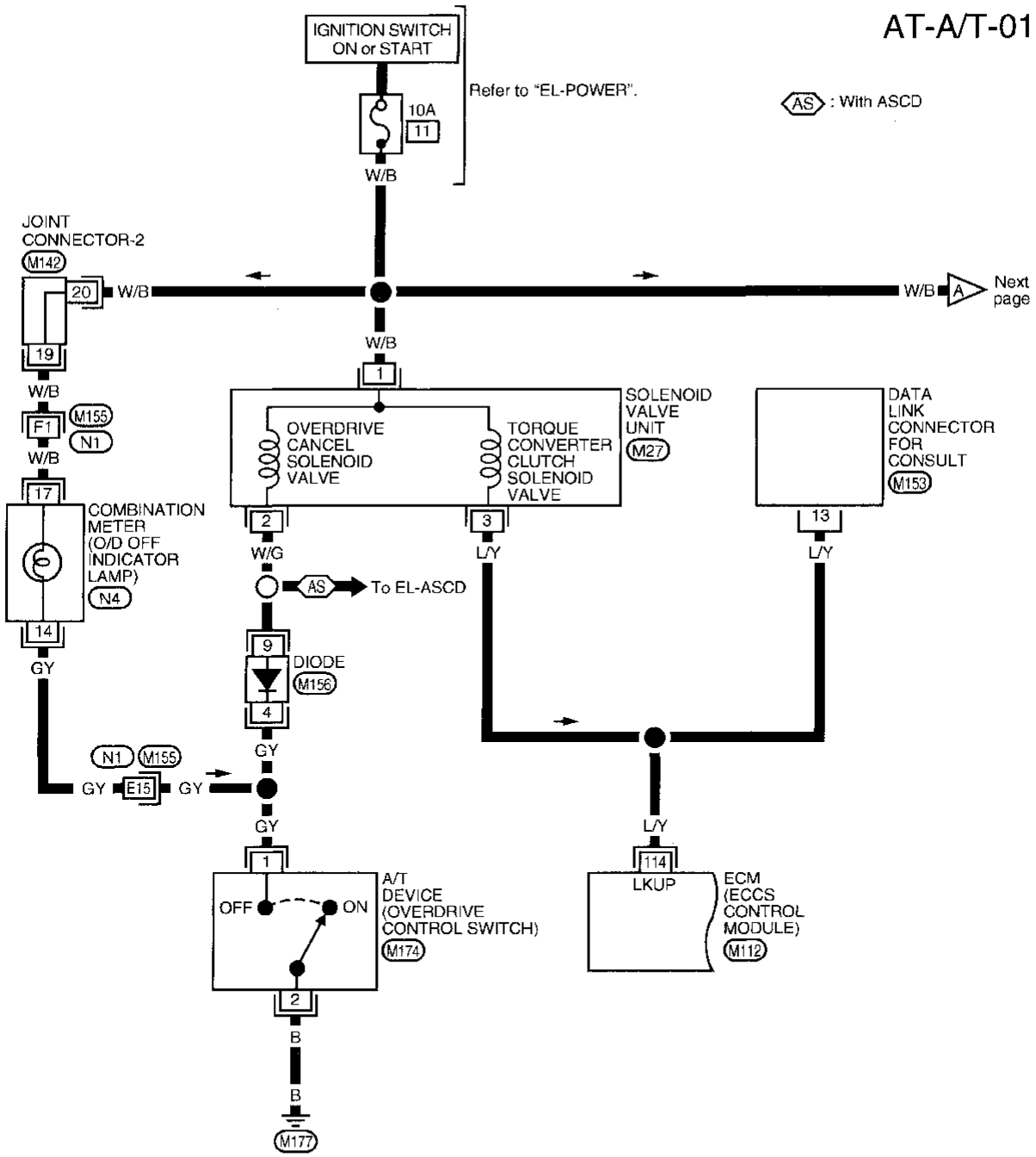

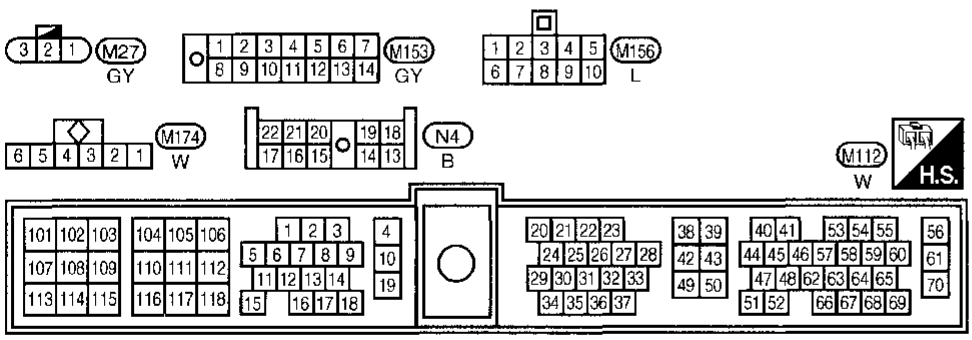

Refer to last page (Foldout page).
M142
M155 , N1

AAT032A

Wiring Diagram (Cont'd)

AT-A/T-02

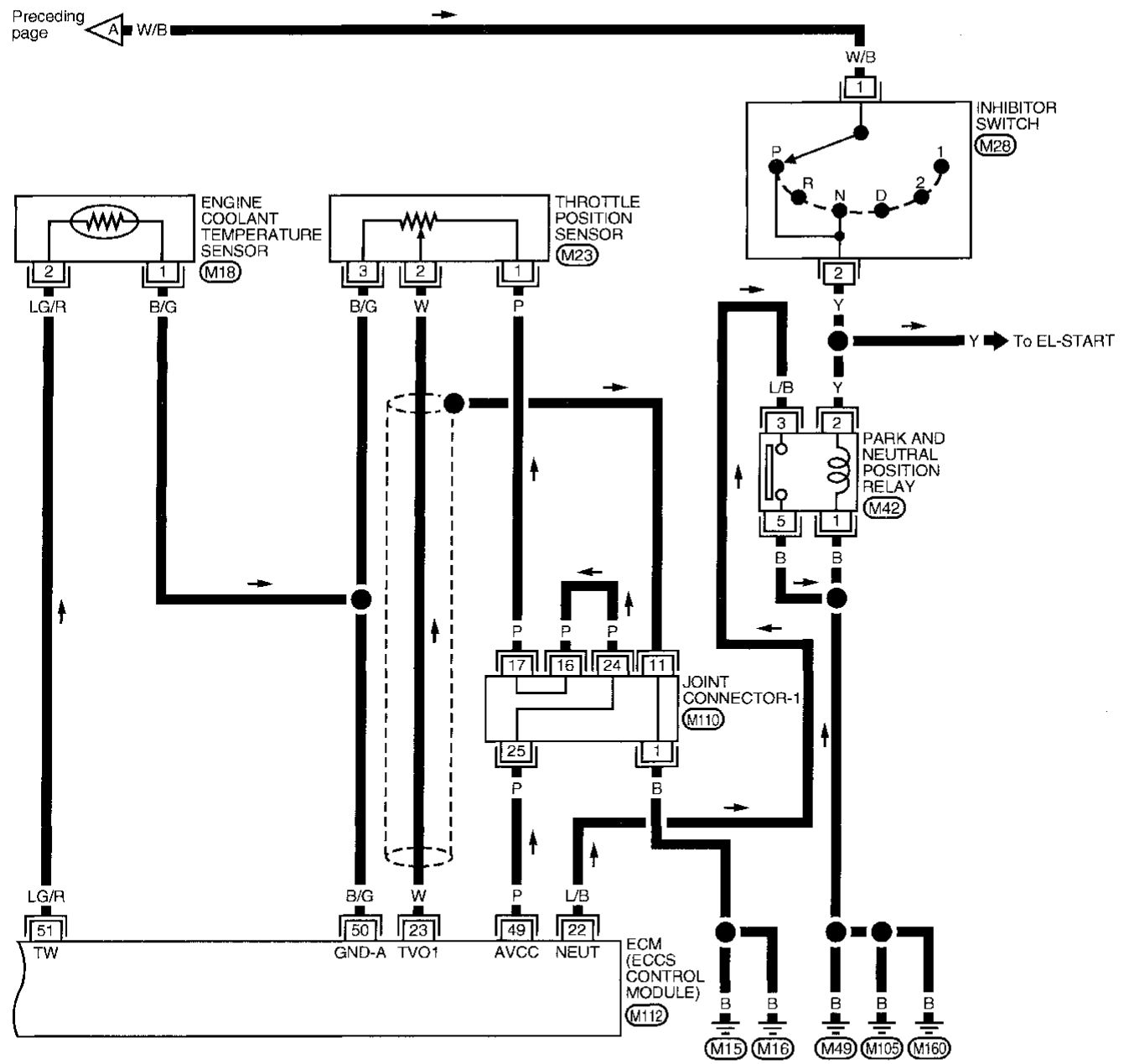

Refer to last page (Foldout page).
M110

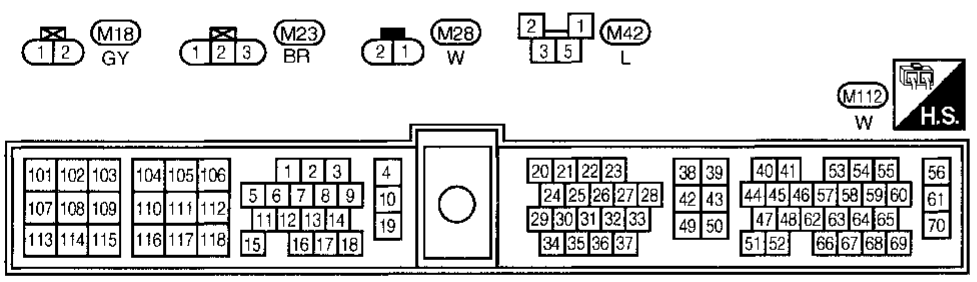

AAT790-B

Cross-Sectional View

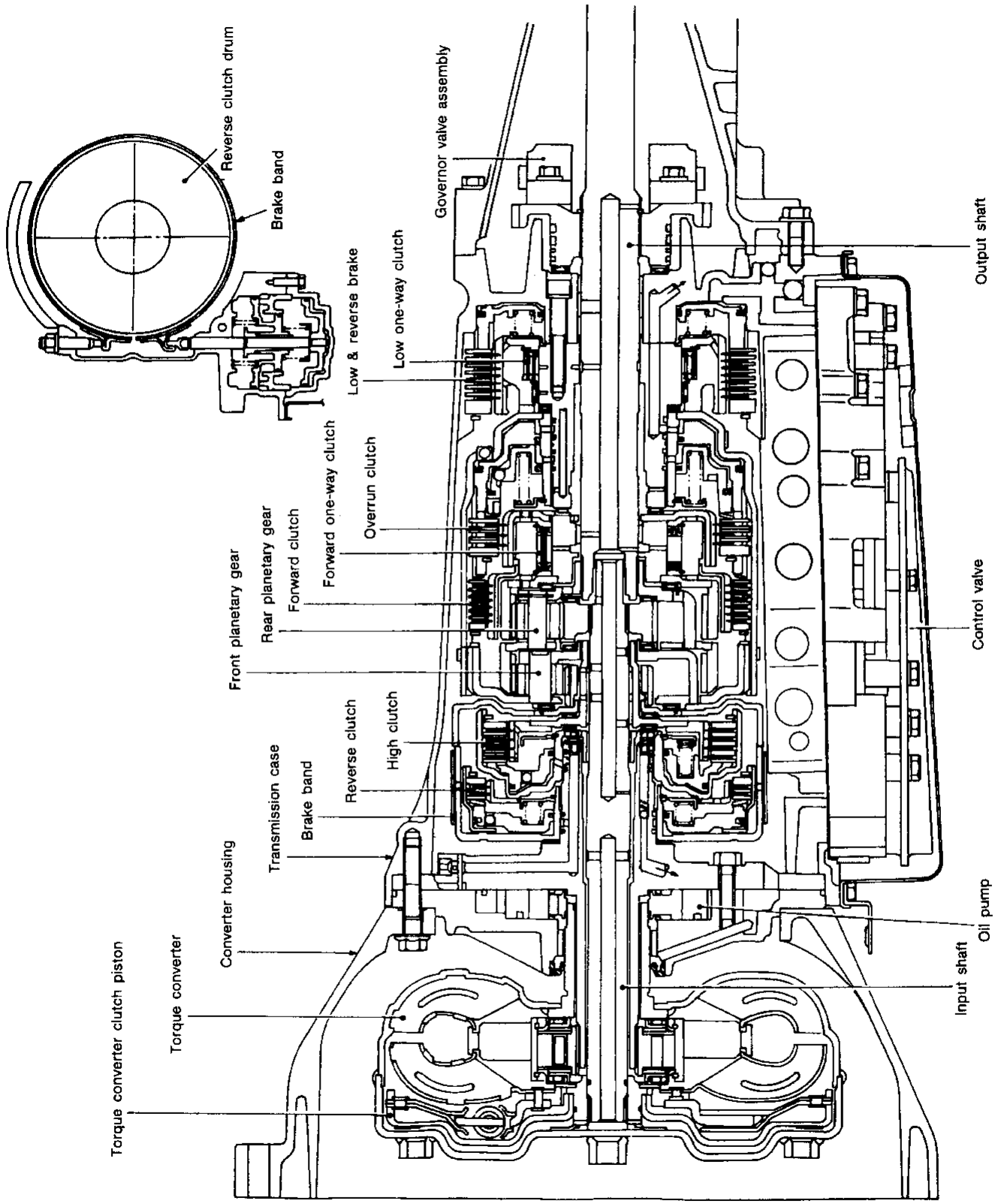

SAT117CA

Hydraulic Control Circuits

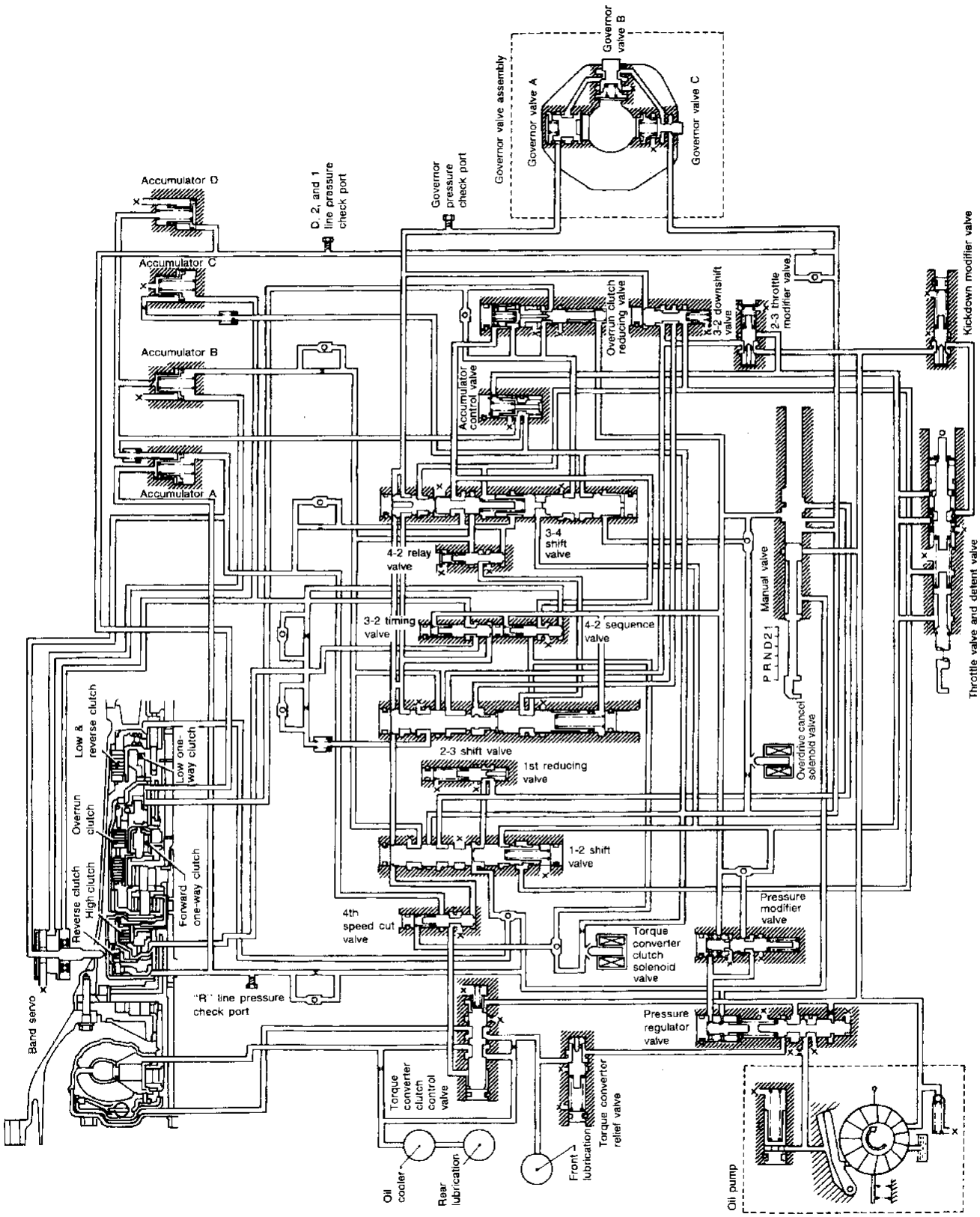

AAT033A

Shift Mechanism

The RL4R01A automatic transmission uses compact, dual planetary gear systems to improve power-transmission efficiency, simplify construction and reduce weight.
It also employs an optimum shift control and superwide gear ratios to improve starting performance and acceleration during medium and high-speed operation.
Two one-way clutches are also employed: one is used for the forward clutch and the other for the low clutch. These one-way clutches, combined with four accumulators, reduce shifting shock to a minimum.

CONSTRUCTION

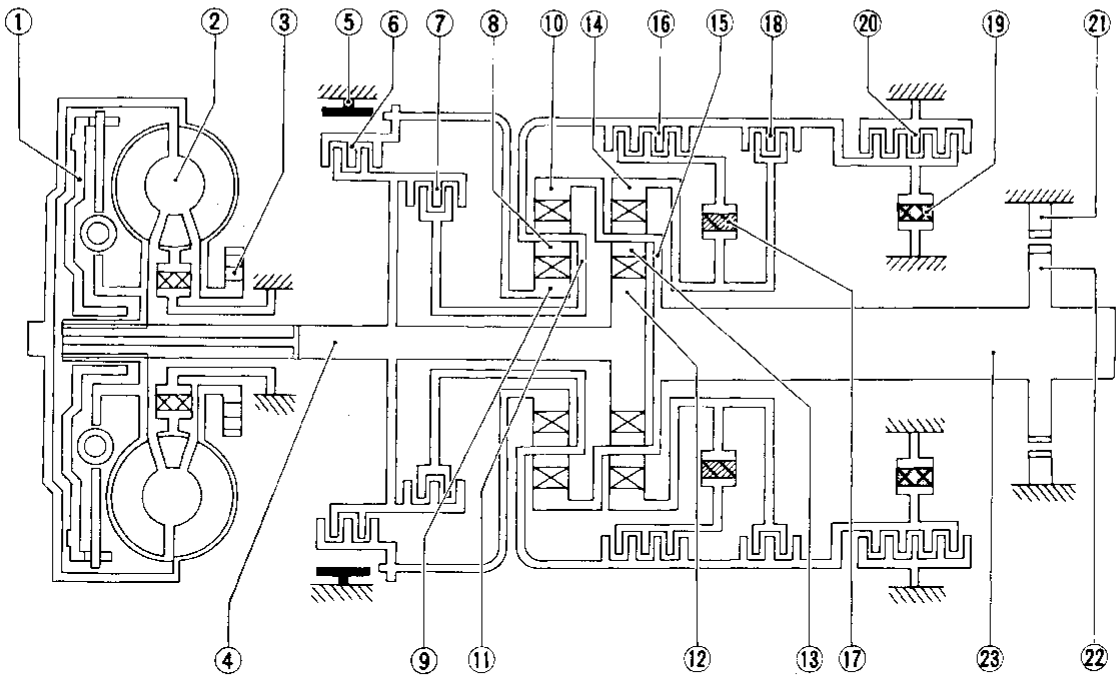

① Torque converter clutch piston
② Torque converter
③ Oil pump
④ Input shaft
⑤ Brake band
⑥ Reverse clutch
⑦ High clutch
⑧ Front pinion gear
⑨ Front sun gear
⑩ Front internal gear
⑪ Front planetary carrier
⑫ Rear sun gear
⑬ Rear pinion gear
⑭ Rear internal gear
⑮ Rear planetary carrier
⑯ Forward clutch
⑰ Forward one-way clutch
⑱ Overrun clutch
⑲ Low one-way clutch
⑳ Low & reverse brake
㉑ Parking pawl
㉒ Parking gear
㉓ Output shaft

SAT026HA

Shift Mechanism (Cont'd)

FUNCTION OF CLUTCH AND BRAKE

Clutch and brake components	Abbr.	Function
⑥ Reverse clutch	R/C	To transmit input power to front sun gear ⑨.
⑦ High clutch	H/C	To transmit input power to front planetary carrier ⑪.
⑯ Forward clutch	F/C	To connect front planetary carrier ⑪ with forward one-way clutch ⑰.
⑱ Overrun clutch	O/C	To connect front planetary carrier ⑪ with rear internal gear ⑭.
⑤ Brake band	B/B	To lock front sun gear ⑨.
⑰ Forward one-way clutch	F/O.C	When forward clutch ⑯ is engaged, to stop rear internal gear ⑭ from rotating in opposite direction.
⑲ Low one-way clutch	L/O.C	At D_1 position, to prevent rear internal gear ⑭ from rotating in opposite direction.
⑳ Low & reverse brake	L & R/B	To lock rear internal gear ⑭ (2, 1_2 and 1_1), to lock front planetary carrier ⑪ (R position).

OPERATION OF CLUTCH AND BRAKE

Shift position		Reverse clutch ⑥	High clutch ⑦	Forward clutch ⑯	Overrun clutch ⑱	Band servo 2nd apply	Band servo 3rd release	Band servo 4th apply	Forward one-way clutch ⑰	Low one-way clutch ⑲	Low & reverse brake ⑳	Lock-up	Remarks
P													PARK POSITION
R		○									○		REVERSE POSITION
N													NEUTRAL POSITION
D *4	1st			○	⊗				●	●			Automatic shift 1 ↔ 2 ↔ 3 ↔ 4
	2nd			○	*1 ◎	○			●				
	3rd		○	○	◎	*2 ⊗	⊗		●			*5 ○	
	4th		○	⊗		*3 ⊗	⊗	○				○	
2	1st			○	⊗				●	●			Automatic shift 1 ↔ 2
	2nd			○	○	○			●				
1	1st			○	○				●		○		Locks (held stationary) in 1st speed 1 ← 2
	2nd			○	○	○			●				

*1 : Operates when overdrive control switch is set in OFF position.
*2 : Oil pressure is applied to both 2nd "apply" side and 3rd "release" side of band servo piston. However, brake band does not contract because oil pressure area on the "release" side is greater than that on the "apply" side.
*3 : Oil pressure is applied to 4th "apply" side in condition *2 above, and brake band contracts.
*4 : A/T will not shift to 4th when overdrive control switch is set to OFF position.
*5 : Operates when overdrive control switch is set to OFF position.

○ : Operates.

◎ : Operates when throttle opening is less than 1/16, activating engine brake.

● : Operates during "progressive" acceleration.

⊗ : Operates but does not affect power-transmission.

ⓧ : Operates when throttle opening is less than 1/16 but does not affect engine brake.

Remarks

ATF COOLER SERVICE

If the oil pan contains large quantities of foreign matter or the strainer is excessively clogged, replace the ATF cooler.

- ATF cooler is not serviceable separately from the radiator. If service is required, replace radiator assembly.

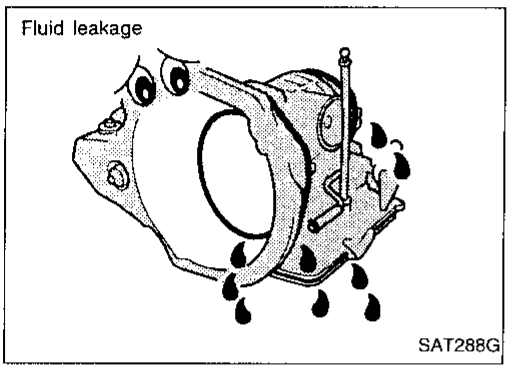

A/T Fluid Check

FLUID LEAKAGE CHECK

1. Clean area suspected of leaking, — for example, mating surface of converter housing and transmission case.
2. Start engine, apply foot brake, place selector lever in "D" position and wait a few minutes.
3. Stop engine.
4. Check for fresh leakage.

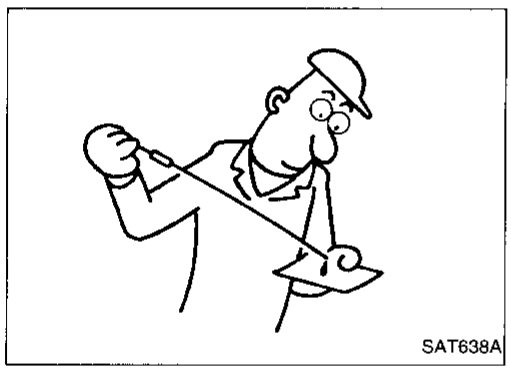

FLUID CONDITION CHECK

Fluid color	Suspected problem
Dark or black with burned odor	Wear of frictional material
Milky pink	Water contamination — Road water entering through filler tube or breather
Varnished fluid, light to dark brown and tacky	Oxidation — Over or under filling — Overheating

FLUID LEVEL CHECK

Refer to MA section ("Checking A/T Fluid", "CHASSIS AND BODY MAINTENANCE").

Road Test

Perform road tests using "Symptom" chart. Refer to AT-16.

"P" POSITION

1. Place selector lever in "P" position and start the engine. Stop the engine and repeat the procedure in all positions, including "N" position.
2. Stop vehicle on a slight upgrade and place selector lever in "P" position. Release parking brake to make sure vehicle remains locked.

"R" POSITION

1. Manually move selector lever from "P" or "R", and note shift quality.
2. Drive vehicle in reverse long enough to detect slippage or other abnormalities.

Road Test (Cont'd)

"N" POSITION

1. Manually move selector lever from "R" and "D" to "N" and note shift quality.
2. Release parking brake with selector lever in "N" position. Lightly depress accelerator pedal to make sure vehicle does not move. (When vehicle is new or soon after clutches have been replaced, vehicle may move slightly. This is not a problem.)

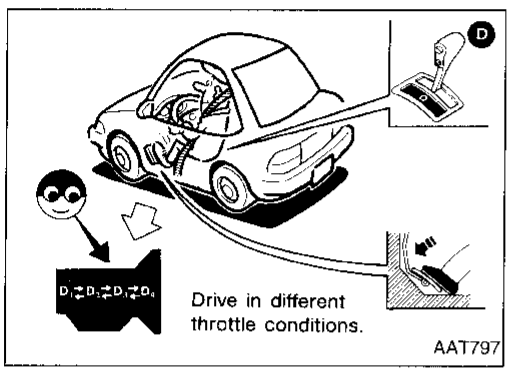

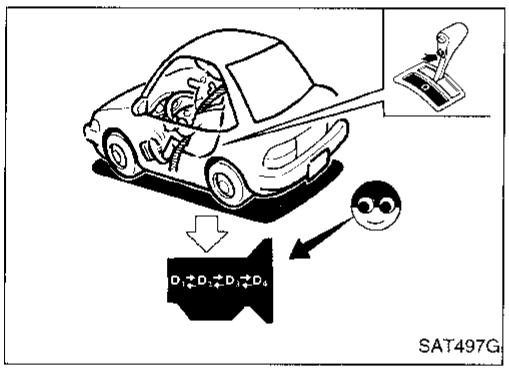

"D" POSITION

1. Manually shift selector lever from "N" to "D" position, and note shift quality.
2. Using the shift schedule as a reference, drive vehicle in "D" position. Record, on symptom chart, respective vehicle speeds at which up-shifting and down-shifting occur. These speeds are to be read at three different throttle positions (light, half and full), respectively. Also determine the timing at which shocks are encountered during shifting and which clutches are engaged.
3. Determine, whether lock-up properly occurs while driving vehicle in proper gear position and at proper speeds.
4. Check to determine if shifting to overdrive gear cannot be made while overdrive control switch is OFF.
5. Drive vehicle at 65 to 80 km/h (40 to 50 MPH) with half to light throttle position (D_3 position). Fully depress accelerator pedal to make sure transmission downshifts from 3rd to 2nd gear.
6. Drive vehicle at 35 to 45 km/h (22 to 28 MPH) with half to light throttle position (D_2 position). Fully depress accelerator pedal to make sure transmission downshifts from 2nd to 1st gear.

"2" POSITION

1. Shift to "2" position and make sure vehicle starts in 1st gear.
2. Increase vehicle speed to make sure transmission upshifts from 1st to 2nd gear.
3. Further increase vehicle speed. Make sure transmission does not upshift to 3rd gear.
4. Drive vehicle at 35 to 45 km/h (22 to 28 MPH) with throttle at half to light position (2_2 position). Fully depress accelerator pedal to make sure transmission downshifts from 2nd to 1st gear.
5. Drive vehicle at idle in "2" position to make sure that transmission downshifts to 1st gear.
6. Move selector lever to "D" position and drive vehicle at 40 to 50 km/h (25 to 31 MPH). Then, move selector lever to "2" position to make sure transmission downshifts to 2nd gear.

"1" POSITION

1. Place selector lever in "1" position and accelerate. Make sure transmission does not shift from 1st to 2nd gear although vehicle speed increases.
2. While driving vehicle in "1" position, release accelerator pedal to make sure that engine compression acts as a brake.
3. Place selector lever in "D" or "2" position and drive vehicle at 20 to 30 km/h (12 to 19 MPH). Then move selector lever to "1" position to make sure transmission downshifts to 1st gear.

Shift Schedule

VEHICLE SPEED WITH SHIFTING GEARS

This check should be carried out when ATF temperature is between 50 and 80°C (122 and 176°F) after the vehicle has been driven approx. 10 minutes.

Vehicle speed when shifting gears

Throttle position	Vehicle speed km/h (MPH)						
	$D_1 \rightarrow D_2$	$D_2 \rightarrow D_3$	$D_3 \rightarrow D_4$	$D_4 \rightarrow D_3$	$D_3 \rightarrow D_2$	$D_2 \rightarrow D_1$	$1_2 \rightarrow 1_1$
Full throttle	53 - 57 (33 - 35)	100 - 108 (62 - 67)	—	147 - 157 (91 - 98)	91 - 99 (57 - 62)	47 - 51 (29 - 32)	41 - 45 (25 - 28)
Half throttle	32 - 36 (20 - 22)	57 - 65 (35 - 40)	114 - 124 (71 - 77)	65 - 75 (40 - 47)	28 - 36 (17 - 22)	12 - 16 (7 - 10)	41 - 45 (25 - 28)

Vehicle speed when performing and releasing lock-up

Throttle position	D_4	
	Vehicle speed km/h (MPH)	
	Lock-up ON	Lock-up OFF
Full throttle	—	—
Half throttle	71 - 79 (44 - 49)	71 - 79 (44 - 49)

NOTES

Symptom Chart

Numbers are arranged in order of probability.
Perform inspections starting with number one and work up.
Numbers in the OFF VEHICLE columns indicate that the transmission must be removed from the vehicle to perform the inspection.

: Valve expected to be malfunctioning

		ON VEHICLE															
		Oil level and oil quality	Control linkage	Inhibitor switch and wiring	Throttle wire	Engine idling speed	Line pressure	Control valve	4th speed cut valve	Pressure regulator valve	Pressure modifier valve	1-2 shift valve	2-3 shift valve	3-4 shift valve	Accumulator control valve	3-2 downshift valve	2-3 throttle modifier valve
Sharp shocks in shifting from "N" to "D" position		1	2	.	5	3	4	8									
Shift shocks	When shifting from 1st to 2nd or 2nd to 3rd	1	2	.	4	.	3	7									
	When shifting from 3rd to 4th	1	2	.	4	.	3	6									
	When shifting from "D" to "2" and "1" position. When overdrive control switch is set from ON to OFF	1	2	.	4	.	3	5									
	When shifting from 2nd to 1st in "1" position	1	2	.	4	.	3	5									
Shift slippage when upshifting	When shifting from 1st to 2nd	1	2	.	4	.	3	6									
	When shifting from 2nd to 3rd	1	2	.	4	.	3	6									
	When shifting from 3rd to 4th	1	2	.	4	.	3	6									
Shift slippage with accelerator pedal depressed	When shifting from 4th to 2nd	1	2	.	5	.	3	7									
	When shifting from 4th to 3rd	1	2	.	4	.	3	6									
	When shifting from 4th to 1st and shifting from 3rd to 1st	1	2	.	5	.	3	7									
Poor power/acceleration	When vehicle starts	1	2	.	5	.	3	10									
	When upshifting	1	2	.	4	.	3	8									
No engine braking	When shifting from "D" to "2" and "1" position	1	2	.	4	.	3	6									
	When overdrive control switch is set from ON to OFF	1	2	.	4	.	3	8									
	When shifting from 2nd to 1st in "1" position	1	2	.	4	.	3	6									
Shift quality	Too low a gear change point from 2nd to 3rd and from 3rd to 2nd.	1	.	.	4	.	2	5									
	Too high a gear change point from 2nd to 3rd and from 3rd to 2nd.	1	.	.	4	.	2	5									
	Too low a gear change point from 2nd to 1st in "1" position.	1	.	.	4	.	2	5									
	Too high a gear change point from 2nd to 1st in "1" position.	1	.	.	4	.	2	5									

Symptom Chart (Cont'd)

ON VEHICLE																							OFF VEHICLE										
4-2 relay valve	Torque converter clutch control valve	Throttle valve & detent valve	Manual valve	Kickdown modifier valve	1st reducing valve	Overrun clutch reducing valve	3-2 timing valve	Torque converter relief valve	4-2 sequence valve	Governor pressure	Governor valve	Primary governor valve	Secondary governor valve ①	Secondary governor valve ②	Overdrive cancel solenoid valve	Torque converter clutch solenoid valve	Accumulator N-D	Accumulator 1-2	Accumulator 2-3	Accumulator 3-4 (N-R)	Ignition switch and starter motor	overdrive control switch and wiring	Torque converter	Oil pump	Reverse clutch	High clutch	Forward clutch	Forward one-way clutch	Overrun clutch	Low one-way clutch	Low & reverse clutch	Brake band	Parking components
										.	.				.	.	6	.	.	7	.	.	.	.	9	.	.	.	.	.	.	.	.	.
										.	.				.	.	.	5	6	.	.	.	.	.	.	.	.	.	.	.	.	.	.
										.	.				.	.	.	.	.	5	.	.	.	.	.	.	.	.	8	.	.	7	.
										.	.				.	.	.	.	.	.	.	.	.	.	.	7	.	.	.	.	.	6	.
										.	.				.	.	.	.	.	.	.	.	.	.	.	.	.	.	.	6	.	.	.
										.	.				.	.	.	5	.	.	.	.	.	.	.	.	.	.	.	.	.	7	.
										.	.				.	.	.	.	5	.	.	.	.	.	.	8	.	.	.	.	.	7	.
										.	.				.	.	.	.	.	5	.	.	.	.	.	8	.	.	.	.	.	7	.
										4	11				.	.	6	8	9	7	.	.	12	13	14	15	17	18	19	20	21	26	.
										.	.				.	.	.	5	6	7	.	.	.	9	.	10	.	.	12	.	13	11	.
										4	8				.	.	.	.	6	.	.	.	.	.	.	9	.	11	.	.	.	10	.
										.	.				.	.	.	.	5	.	.	.	.	.	.	7	8	.	.	.	.	.	.
										4	8				.	.	.	.	6	.	.	.	.	.	.	.	9	.	.	.	.	.	.
										.	.				.	.	.	.	5	.	.	.	.	.	.	.	.	.	7	.	.	.	.
										.	.				7	.	.	.	5	.	.	6	.	.	.	.	.	.	9	.	.	.	.
										.	.				.	.	.	.	.	.	.	.	.	.	.	.	.	.	7	.	8	.	.
										3	6				.	.	.	.	.	.	.	.	.	.	.	.	.	.	.	.	.	.	.
										3	6				.	.	.	.	.	.	.	.	.	.	.	.	.	.	.	.	.	.	.
										3	6				.	.	.	.	.	.	.	.	.	.	.	.	.	.	.	.	.	.	.
										3	6				.	.	.	.	.	.	.	.	.	.	.	.	.	.	.	.	.	.	.

Symptom Chart (Cont'd)

Numbers are arranged in order of probability.
Perform inspections starting with number one and work up.
Numbers in OFF VEHICLE columns indicate that the transmission must be removed from the vehicle to perform the inspection.

: Valve expected to be malfunctioning

		ON VEHICLE															
		Oil level and oil quality	Control linkage	Inhibitor switch and wiring	Throttle wire	Engine idling speed	Line pressure	Control valve	4th speed cut valve	Pressure regulator valve	Pressure modifier valve	1-2 shift valve	2-3 shift valve	3-4 shift valve	Accumulator control valve	3-2 downshift valve	2-3 throttle modifier valve
Shift quality	Failure to change gear from 4th to 2nd with accelerator pedal depressed.	1	.	.	4	.	2	5									
	Failure to change gear from 3rd to 2nd with accelerator pedal depressed.	1	.	.	4	.	2	5									
	Failure to change gear from 1st to 2nd in "D" and "2" position.	1	.	.	4	.	2	5									
	Vehicle does not start from 1st in "D" and "2" position.	1	.	.	4	.	2	5									
	Failure to change gear to 3rd to 4th in "D" position.	1	.	.	4	.	2	7									
	Changes gear to 1st directly when selector lever is set from "D" to "1" position.	1	.	.	4	.	2	5									
	Changes gear to 2nd in "1" position.	1	.	.	4	.	2	5									
	Too high or low a change point when lock-up operates.	1	.	.	4	.	2	5									
Lock-up quality	Lock-up point is extremely high or low.	1	.	.	4	.	2	5									
	Torque converter does not lock-up.	1	.	.	4	.	2	5									
	Lock-up is not released when accelerator pedal is released.	1	.	.	.	.	.	.									
Engine does not start in "P" and "N" positions, or engine starts in positions other than "P" and "N" positions.		.	2	3	.	.	.	.									
Vehicle moves with selector lever in "P" position.		.	1	.	.	.	.	.									

Symptom Chart (Cont'd)

ON VEHICLE																						OFF VEHICLE									
4-2 relay valve	Torque converter clutch control valve	Throttle valve & detent valve	Manual valve	Kickdown modifier valve	1st reducing valve	Overrun clutch reducing valve	3-2 timing valve	Torque converter relief valve	4-2 sequence valve	Governor pressure	Governor valve	Primary governor valve	Secondary governor valve ①	Secondary governor valve ②	Overdrive cancel solenoid valve	Torque converter clutch solenoid valve	Accumulator N-D	Accumulator 1-2	Accumulator 2-3	Accumulator 3-4 (N-R)	Ignition switch and starter motor	Overdrive control switch and wiring	Torque converter	Oil pump	Reverse clutch	High clutch	Forward clutch	Forward one-way clutch	Overrun clutch	Low one-way clutch	Low & reverse clutch	Brake band	Parking components
										3	6				.	.	.	.	.	.	.	.	.	.	.	.	.	.	.	.	.	.	.
										3	6				.	.	.	.	.	.	.	.	.	.	.	.	.	.	.	.	.	.	.
										3	6				.	.	.	.	.	.	.	.	.	.	.	.	.	.	.	.	.	.	.
										3	6				.	.	.	.	.	.	.	.	.	.	.	.	.	.	.	.	.	.	.
										3	8				6	.	.	.	.	.	.	5	.	.	.	.	.	.	.	.	.	.	.
										3	6				.	.	.	.	.	.	.	.	.	.	.	.	.	.	.	.	.	.	.
										3	6				.	.	.	.	.	.	.	.	.	.	.	.	.	.	.	.	.	.	.
										3	6				.	.	.	.	.	.	.	.	.	.	.	.	.	.	.	.	.	.	.
										3	6				.	.	.	.	.	.	.	.	.	.	.	.	.	.	.	.	.	.	.
										3	6				.	.	.	.	.	.	.	.	7	.	.	.	.	.	.	.	.	.	.
										.	.				.	2	.	.	.	.	.	.	.	.	.	.	.	.	.	.	.	.	.
										.	.				.	.	.	.	.	.	1	.	.	.	.	.	.	.	.	.	.	.	.
										.	.				.	.	.	.	.	.	.	.	.	.	.	.	.	.	.	.	.	.	2

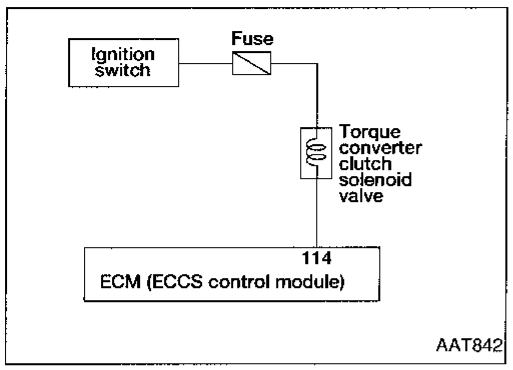

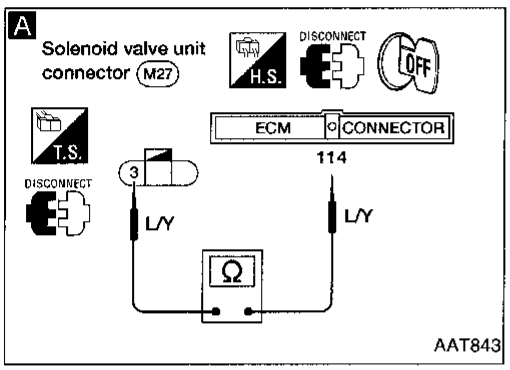

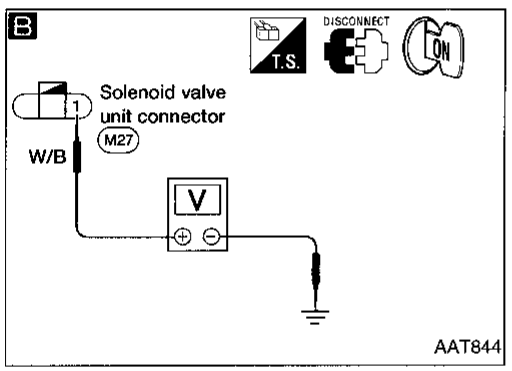

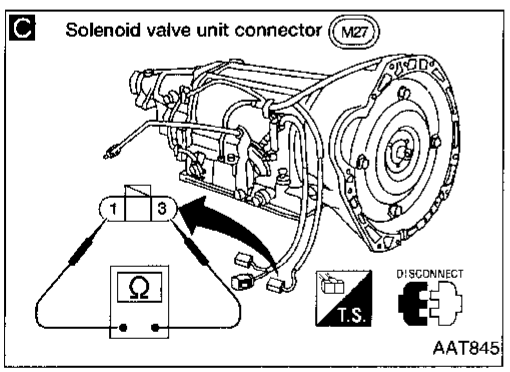

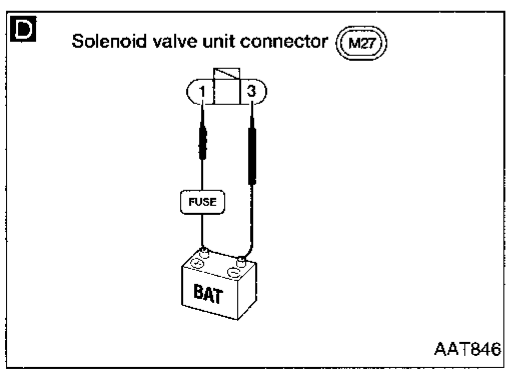

Torque Converter Clutch Solenoid Valve

When the malfunction indicator lamp indicates DTC P1550 (0904), perform "Final check" after inspecting components. If DTC P1550 (0904) is indicated again on "Final check", recheck control valve. Repair or replace control valve assembly as necessary.

A

CHECK GROUND CIRCUIT.
1. Turn ignition switch to OFF position.
2. Disconnect ECM harness connector and torque converter clutch solenoid valve harness connector.
3. Check resistance between solenoid valve unit harness terminal No. ③ and ECM harness terminal No. ⑭.

Resistance:
Approximately 0Ω

No → Repair or replace harness between ECM and torque converter clutch solenoid valve.

Yes ↓

B

CHECK POWER SOURCE CIRCUIT.
1. Turn ignition switch to ON position.
2. Check voltage between solenoid valve unit harness terminal No. ① and ground.

Voltage:
Battery voltage

No → Check the following items:
- Ignition switch and fuse Refer to EL section ("POWER SUPPLY ROUTING").
- Harness continuity between fuse and torque converter clutch solenoid valve.

Yes ↓

C

CHECK TORQUE CONVERTER CLUTCH SOLENOID VALVE (RESISTANCE).
Check resistance between torque converter clutch solenoid valve terminal Nos. ① and ③.

Resistance:
Approximately 25Ω

NG → Replace torque converter clutch solenoid valve.

OK ↓

D

CHECK TORQUE CONVERTER CLUTCH SOLENOID VALVE (OPERATION).
1. Remove torque converter clutch solenoid valve. Refer to AT-37.
2. Check torque converter clutch solenoid valve operation.

NG → Replace torque converter clutch solenoid valve.

OK ↓

Ⓐ
(Go to next page.)

Torque Converter Clutch Solenoid Valve (Cont'd)

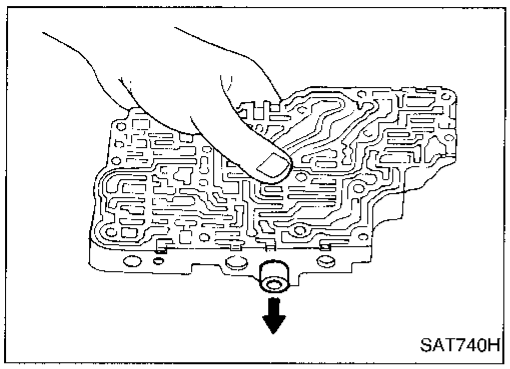

Ⓐ

CHECK CONTROL VALVE.
1. Disassemble control valve assembly. Refer to AT-61.
2. Check torque converter clutch control valve.
- Valve, and sleeve slide along valve bore under their own weight.
- Valve, and sleeve are free from burrs, dents and scratches.
- Control valve springs are free from damage, deformation and fatigue.
- Hydraulic line is free from obstacles.

NG → Repair control valve.

OK ↓

Is malfunction eliminated?

No → Check control valve again. Repair or replace control valve assembly.

Yes ↓

INSPECTION END

Final check

1) Erase the diagnostic test mode II (Self-diagnostic results) memory from ECM. Refer to EC section ["Malfunction Indicator Lamp (MIL)", "ON BOARD DIAGNOSTIC SYSTEM DESCRIPTION"].

2) Turn ignition switch ON.
3) Select "ENGINE" system, "DATA MONITOR" mode with CONSULT.
4) Start engine and warm it up sufficiently.
5) Perform test drive in "D" position for at least 20 seconds continuously under the following conditions.
   Engine speed: 2,000 - 2,700 rpm
   Vehicle speed: 75 - 95 km/h (47 - 59 MPH)

OR

2) Start engine and warm it up sufficiently.
3) Select MODE 7 with GST.
4) Perform test drive in "D" position for at least 20 seconds continuously under the following conditions.
   Engine speed: 2,000 - 2,700 rpm
   Vehicle speed: 75 - 95 km/h (47 - 59 MPH)

OR

2) Start engine and warm it up sufficiently.
3) Perform test drive in "D" position for at least 20 seconds continuously under the following conditions.
   Engine speed: 2,000 - 2,700 rpm
   Vehicle speed: 75 - 95 km/h (47 - 59 MPH)
4) Stop the vehicle, turn ignition switch OFF and wait at least 3 seconds. Then turn ignition switch ON.
5) Perform "Diagnostic Test Mode II (Self-diagnostic results)" with ECM.

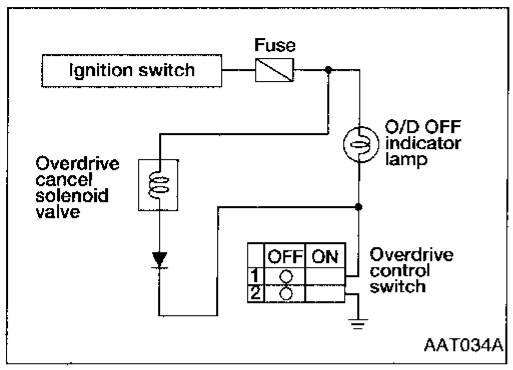

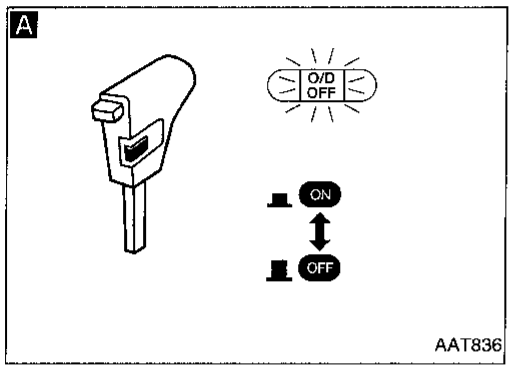

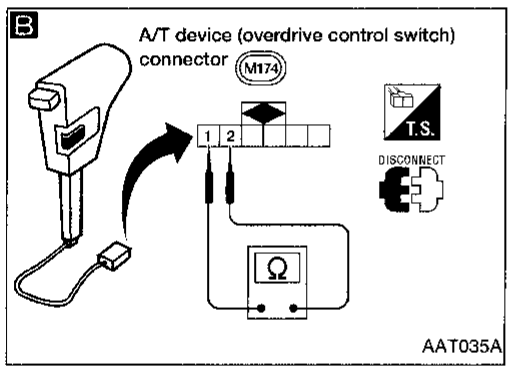

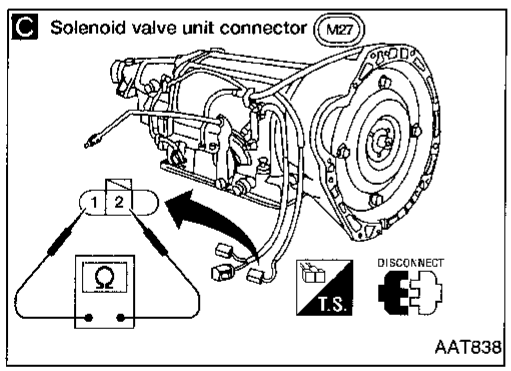

Component Inspection

OVERDRIVE CONTROL SWITCH AND OVERDRIVE CANCEL SOLENOID VALVE

A

CHECK O/D OFF INDICATOR LAMP CIRCUIT.
1. Turn ignition switch to ON.
   (Do not start engine.)
2. Set overdrive control switch to OFF position.
   O/D OFF indicator lamp should come on.

OK → Go to C

NG ↓

Check the following items:
- O/D OFF indicator lamp
  Refer to EL section ("METER AND GAUGES").
- Ignition switch and fuse
  Refer to EL section ("POWER SUPPLY ROUTING").

OK ↓

B

CHECK OVERDRIVE CONTROL SWITCH.
Check continuity between overdrive control switch terminals ① and ②.

Overdrive control switch position	Continuity
ON	No
OFF	Yes

NG → Replace overdrive control switch.

OK ↓

C

CHECK OVERDRIVE CANCEL SOLENOID VALVE.
Check resistance between overdrive cancel solenoid valve terminals ① and ②.
Resistance:
Approximately 25Ω

NG → Replace overdrive cancel solenoid valve.

OK ↓

Check the following items:
- Harness continuity between fuse and overdrive cancel solenoid valve
- Harness continuity between overdrive cancel solenoid valve and overdrive control switch
- Condition of diode

OK ↓

INSPECTION END

Component Inspection (Cont'd)

INHIBITOR SWITCH

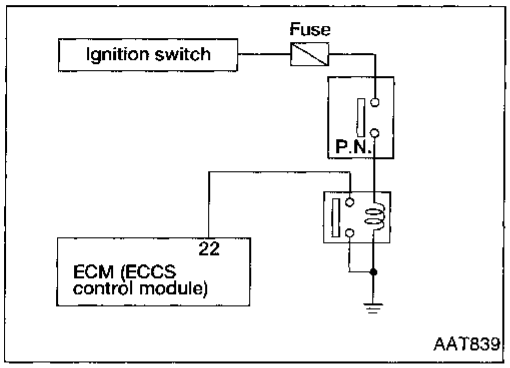

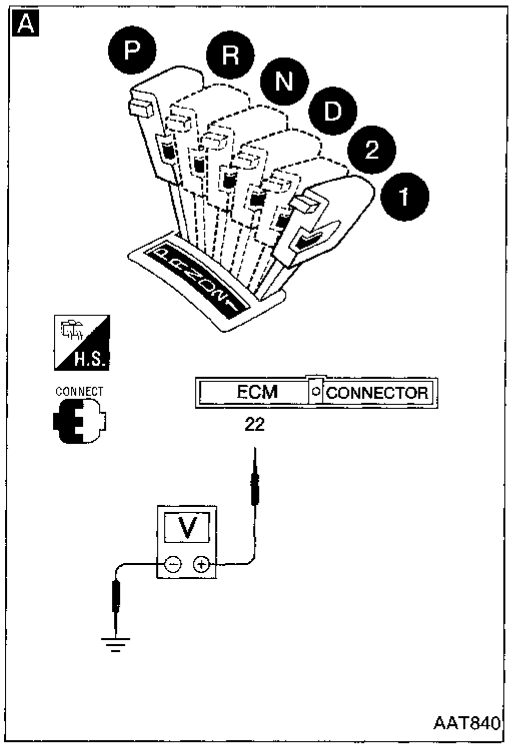

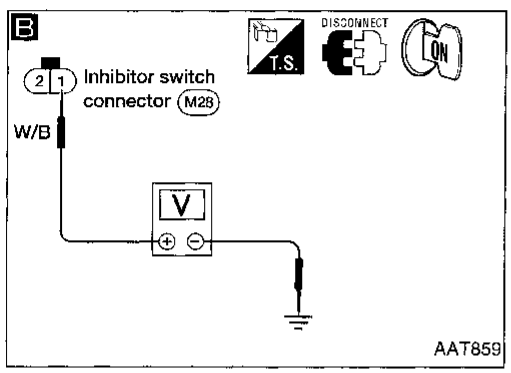

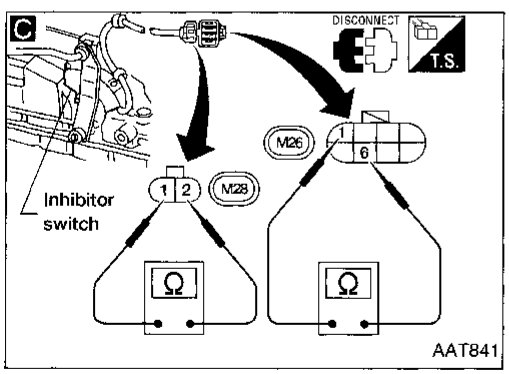

A

CHECK INHIBITOR SWITCH CIRCUIT.

1. Turn ignition switch to ON position. (Do not start engine.)
2. Check voltage between ECM terminal (22) and ground while moving selector lever through each position.
   "P", "N" position: 0V
   "R", "D", "2", "1" position: Approx. 5V

OK → INSPECTION END

NG ↓

B

CHECK POWER SUPPLY FOR INHIBITOR SWITCH.

1. Disconnect inhibitor switch harness connector.
2. Turn ignition switch to ON position. (Do not start engine.)

Do approx. 12 volts exist between inhibitor switch harness terminal No. (1) and body ground?

No → Check 10A fuse (No. 11, located in the fuse block), harness and conntector. Refer to EL section ("Wiring Diagram", "POWER SUPPLY ROUTING").

Yes ↓

C

CHECK INHIBITOR SWITCH.

- Check continuity in "N", "P" and "R" positions.
- With manual lever held in each position, turn manual shaft 1.5° in both directions. (When manual lever is in each position, continuity normally exists within 1.5° range.) If continuity does not exist equally in either direction, properly adjust inhibitor switch. Refer to AT-39.

Position	Terminal No.			
	(1)	(2)	(1)	(6)
Park/neutral position	○	○		
R			○	○

NG → Replace inhibitor switch.

OK ↓

Reconnect inhibitor switch harness connector.

↓

(A)
(Go to next page.)

Component Inspection (Cont'd)

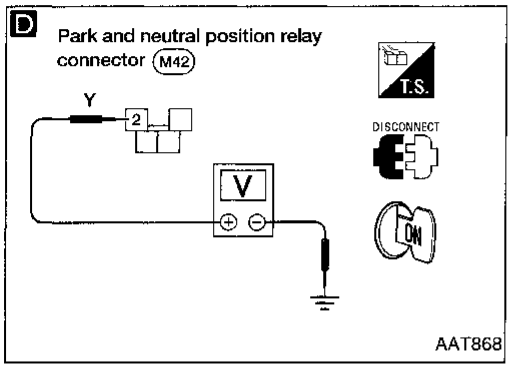

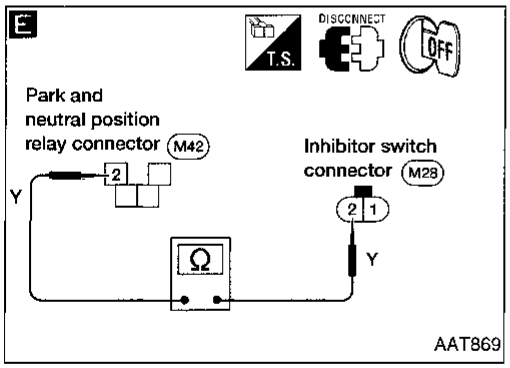

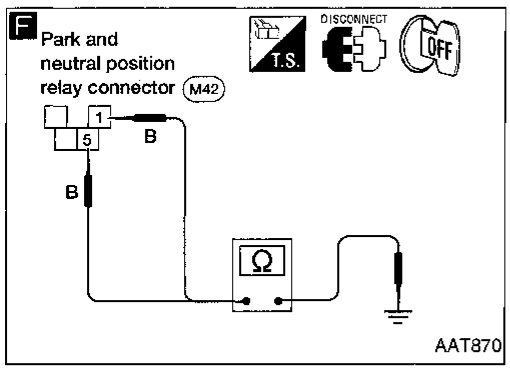

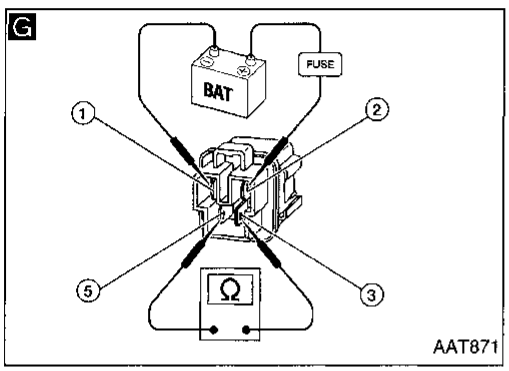

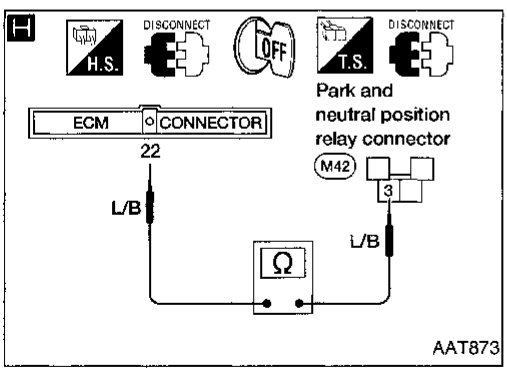

Ⓐ

D

CHECK POWER SUPPLY FOR PARK AND NEUTRAL POSITION RELAY.
1. Disconnect park and neutral position relay harness connector.
2. Put selector lever in "P" or "N" position.

Do approx. 12 volts exist between park and neutral position relay harness terminal No. ② and body ground?

No → **E**

Disconnect inhibitor switch harness connector. Check circuit continuity between inhibitor switch harness terminal No. ② and park and neutral position relay harness terminal No. ②.
Continuity should exist.
If OK, check harness for short.

Yes ↓

F

CHECK BODY GROUND CIRCUIT FOR PARK AND NEUTRAL POSITION RELAY.
Does continuity exist between park and neutral position relay terminal Nos. ①, ⑤ and body ground?
Continuity should exist.

NG → Repair harness or connector.

OK ↓

G

CHECK PARK AND NEUTRAL POSITION RELAY.
Check continuity between terminals ③ and ⑤.

Condition	Continuity
12V direct current supply between terminals ① and ②	Yes
No current supply	No

NG → Replace park and neutral position key.

OK ↓

H

Check circuit continuity between ECM harness terminal No. ㉒ and park and neutral position relay harness terminal No. ③.
Continuity should exist.
If OK, check harness for short.

NG → Repair harness or connector.

OK ↓

Replace ECM.

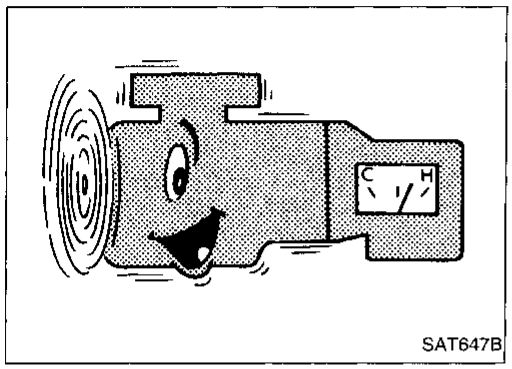

SAT647B

Final Check

STALL TESTING

Stall test procedure

1. Check A/T and engine fluid levels. If necessary, add fluid.
2. Drive vehicle for approx. 10 minutes or until engine oil and ATF reach operating temperature.
   ATF operating temperature:
   50 - 80°C (122 - 176°F)

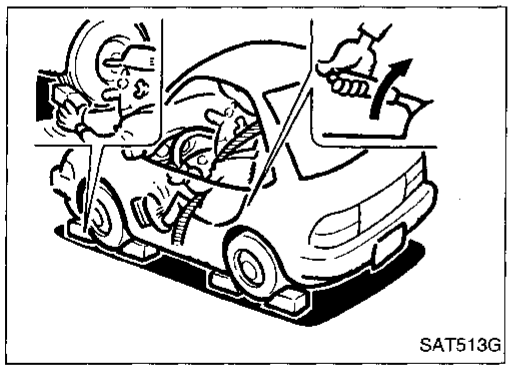
SAT513G

3. Set parking brake and block wheels.
4. Install a tachometer where it can be seen by driver during test.
- **It is good practice to put a mark on point of specified engine speed on indicator.**

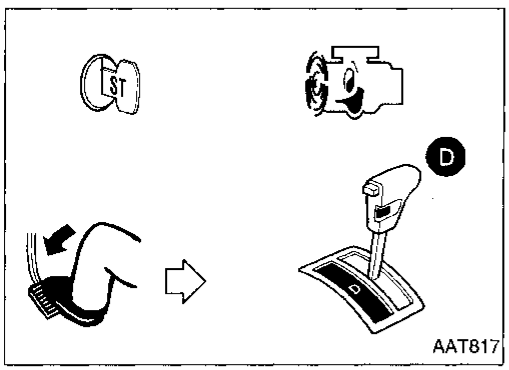

AAT817

5. Start engine, apply foot brake, and place selector lever in "D" position.

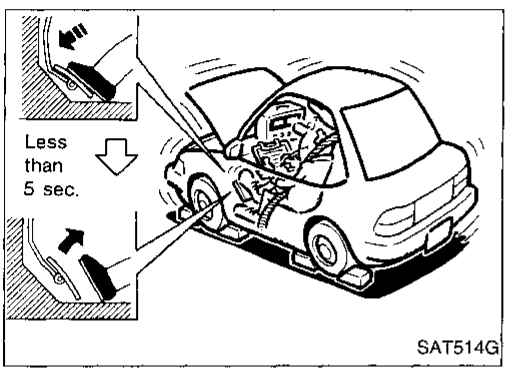

SAT514G

6. Accelerate to wide open throttle gradually while applying foot brake.
- **During test, never hold throttle wide-open for more than 5 seconds.**
7. Quickly note the engine stall revolution and immediately release throttle.
   Stall revolution standard:
   2,100 - 2,300 rpm

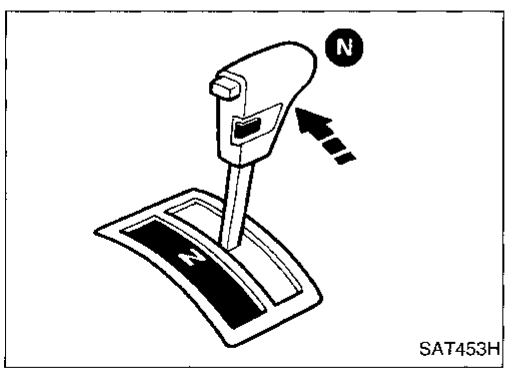

SAT453H

8. Shift selector lever to "N" position.
9. Cool off ATF.
- **Run engine at idle for at least one minute.**
10. Repeat steps 5 through 9 with selector lever in "2", "1" and "R" positions.

JUDGEMENT OF STALL TEST

Selector lever position	Judgement		
D	L	O	H
2	L	O	H
1	L	O	O
R	L	H	H

O : Stall revolution is normal.
H : Stall revolution is higher than specified.
L : Stall revolution is lower than specified.

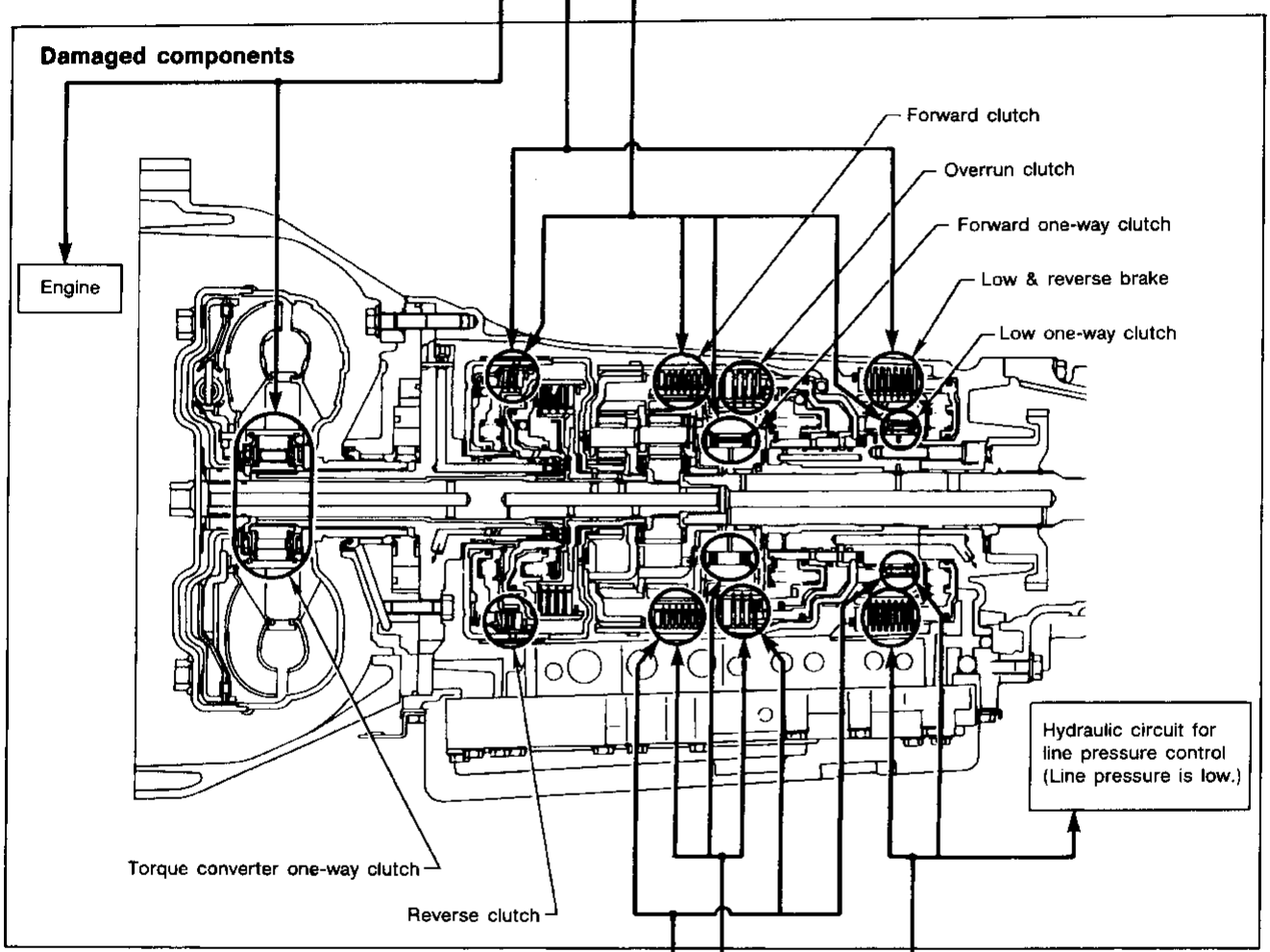

Clutches and brakes except high clutch and brake band are OK. (Condition of high clutch and brake band can not be confirmed by stall test.)

D	H	H	H	O
2	H	H	H	O
1	O	H	H	O
R	O	O	H	O
Selector lever position	Judgement			

SAT161GA

Final Check (Cont'd)

PRESSURE TESTING

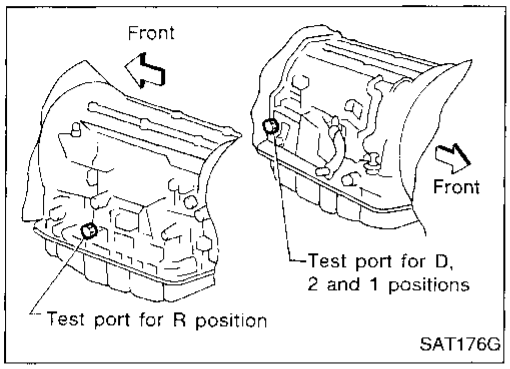

- Location of line pressure test port
- **Line pressure plugs are hexagon-headed bolts.**
- **Always replace line pressure plugs as they are self-sealing bolts.**

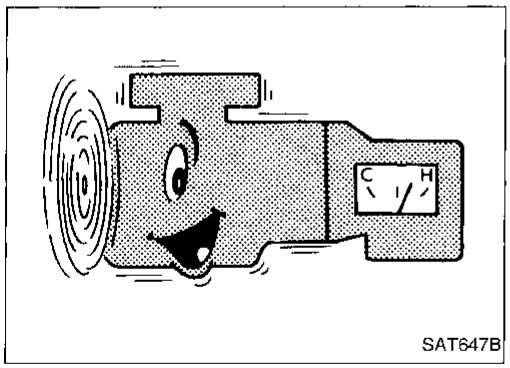

Line pressure test procedure

1. Check A/T and engine fluid levels. If necessary, add.
2. Drive vehicle for approx. 10 minutes or until engine oil and ATF reach operating temperature.
   ATF operating temperature:
   50 - 80°C (122 - 176°F)

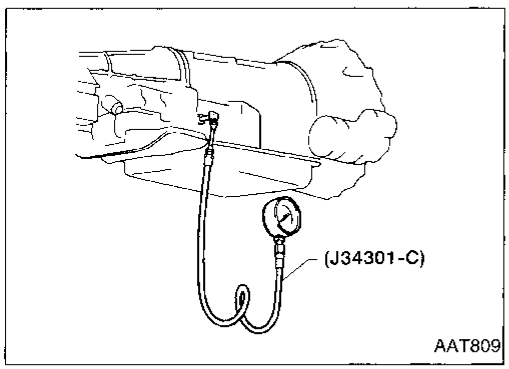

3. Install pressure gauge to line pressure port.

— D, 2 and 1 positions —

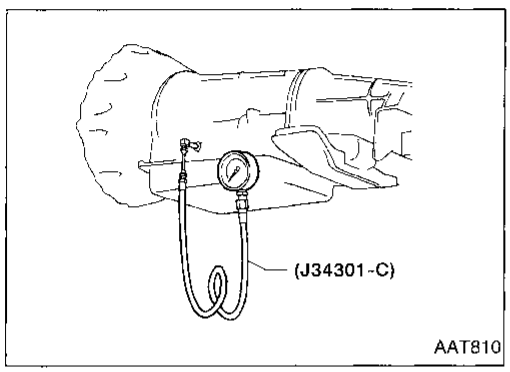

— R position —

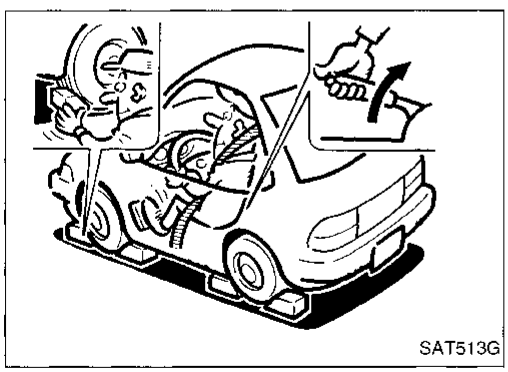

4. Set parking brake and block wheels.
   - **Continue to depress brake pedal fully while performing line pressure test at stall speed.**

Final Check (Cont'd)

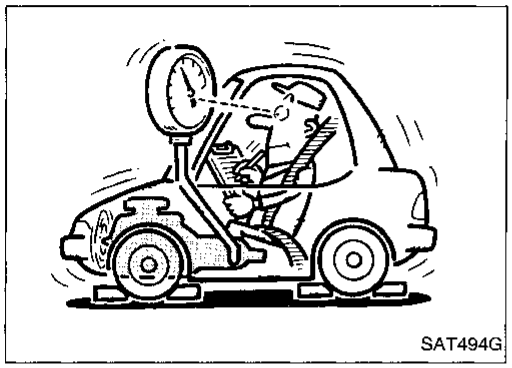
SAT494G

5. Start engine and measure line pressure at idle and stall speed.
- **When measuring line pressure at stall speed, follow the stall test procedure.**

Line pressure:

Engine speed rpm	Line pressure kPa (kg/cm^2, psi)	
	D, 2 and 1 positions	R position
Idle	422 - 461 (4.3 - 4.7, 61 - 67)	667 - 706 (6.8 - 7.2, 97 - 102)
Stall	883 - 961 (9.0 - 9.8, 128 - 139)	1,393 - 1,471 (14.2 - 15.0, 202 - 213)

JUDGEMENT OF LINE PRESSURE TEST

Judgement		Suspected parts
At idle	Line pressure is low in all positions.	● Oil pump wear ● Control piston damage ● Pressure regulator valve or plug sticking ● Spring for pressure regulator valve damaged ● Fluid pressure leakage between oil strainer and pressure regulator valve ● Clogged strainer
	Line pressure is low in particular position.	● Fluid pressure leakage between manual valve and particular clutch. ● For example, line pressure is: — Low in "R" and "1" positions, but — Normal in "D" and "2" positions. Therefore, fluid leakage exists at or around low & reverse brake circuit. Refer to OPERATION OF CLUTCH AND BRAKE, AT-11.
	Line pressure is high.	● Maladjustment of throttle position sensor ● Fluid temperature sensor damaged ● Line pressure solenoid valve sticking ● Short circuit of line pressure solenoid valve circuit ● Pressure modifier valve sticking ● Pressure regulator valve or plug sticking
At stall speed	Line pressure is low.	● Maladjustment of throttle position sensor ● Control piston damaged ● Line pressure solenoid valve sticking ● Short circuit of line pressure solenoid valve circuit ● Pressure regulator valve or plug sticking ● Pressure modifier valve sticking ● Pilot valve sticking

Final Check (Cont'd)

Governor pressure testing

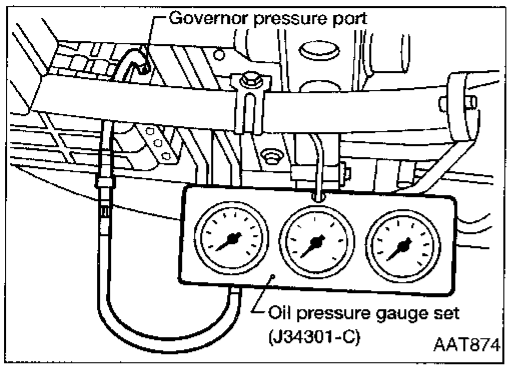

1. Check A/T and engine fluid levels. If necessary, add fluid.
2. Drive vehicle for approx. 10 minutes or until engine oil and ATF reach operating temperature.
   ATF operating temperature:
   50 - 80°C (122 - 176°F)
3. Install pressure gauge to governor pressure port.

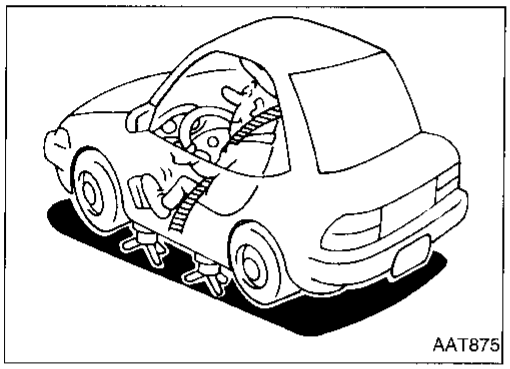

4. Jack up front and rear wheels.
5. Set selector lever in "D" position and gradually depress accelerator pedal.

- **Be careful of rotating wheels.**

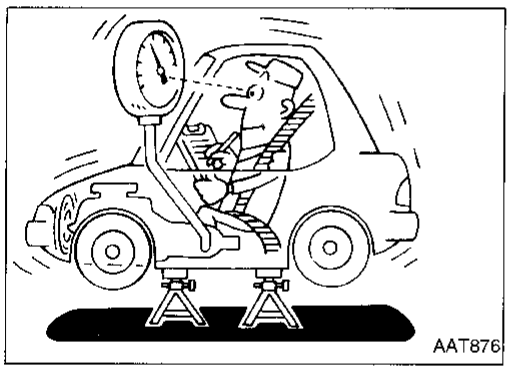

Governor pressure:

- **Governor pressure is not generated when vehicle is stopped.**
- **Governor pressure rises gradually in response to vehicle speed.**

Vehicle speed	Governor pressure kPa (kg/cm^2 psi)
0 km/h (0 MPH)	0 (0, 0)
29 km/h (18 MPH)	102.4 - 141.6 (1.22 - 1.26, 17 - 18)
57 km/h (35 MPH)	233.5 - 284.5 (2.40 - 2.90, 34 - 41)
86 km/h (53 MPH)	350.6 - 409.4 (3.58 - 4.18, 51 - 60)

If not, check governor valve assembly. Refer to AT-72.

Description

- The mechanical key interlock mechanism also operates as a shift lock:
  With the key switch turned to ON, the selector lever cannot be shifted from "P" (park) to any other position unless the brake pedal is depressed.
  With the key removed, the selector lever cannot be shifted from "P" to any other position.
  The key cannot be removed unless the selector lever is placed in "P".
- The shift lock and key interlock mechanisms are controlled by the ON-OFF operation of the shift lock solenoid and by the operation of the rotator and slider located inside the key cylinder, respectively.

Shift Lock System Electrical Parts Location

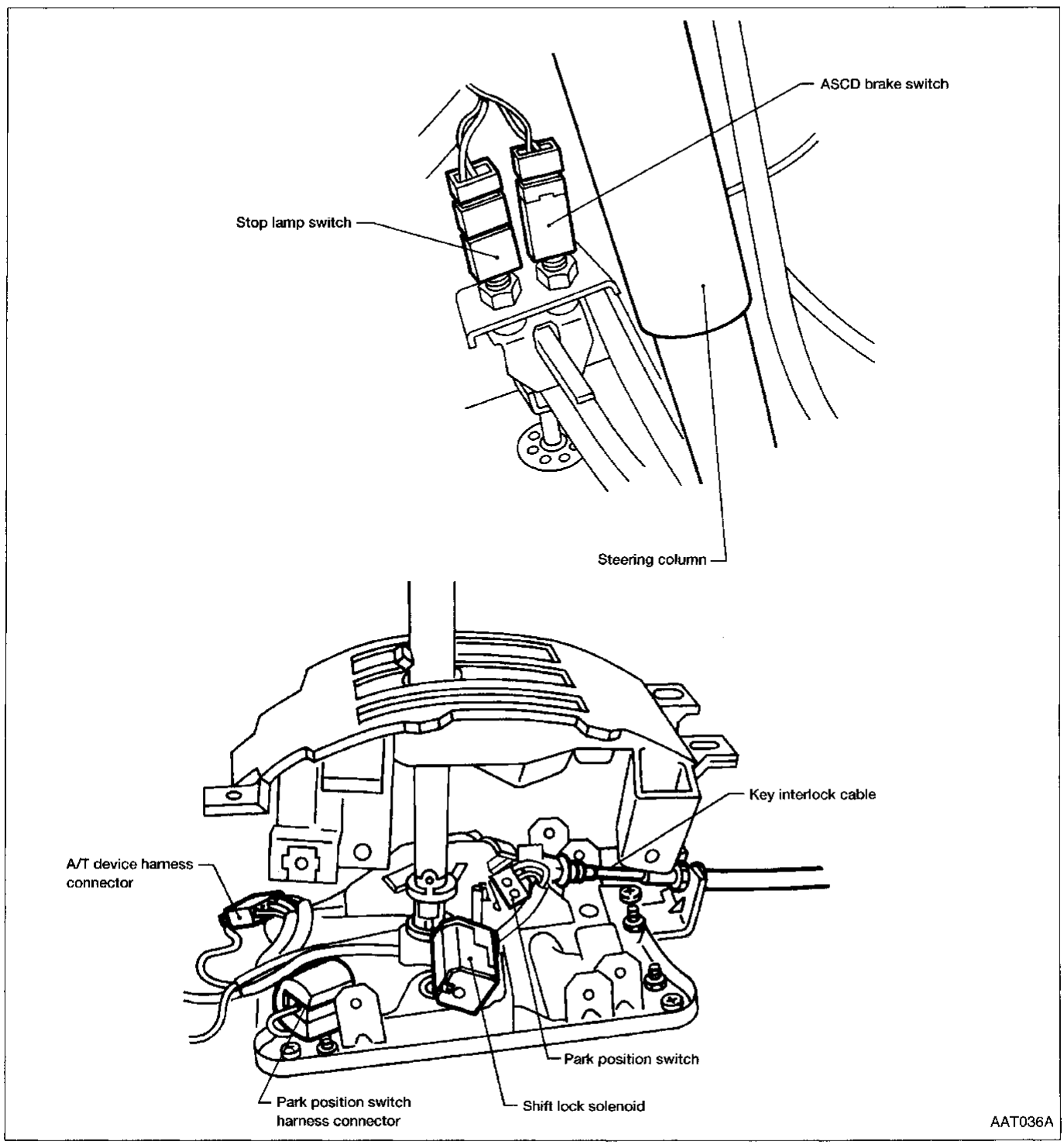

Wiring Diagram

AT-SHIFT-01

AS : With ASCD

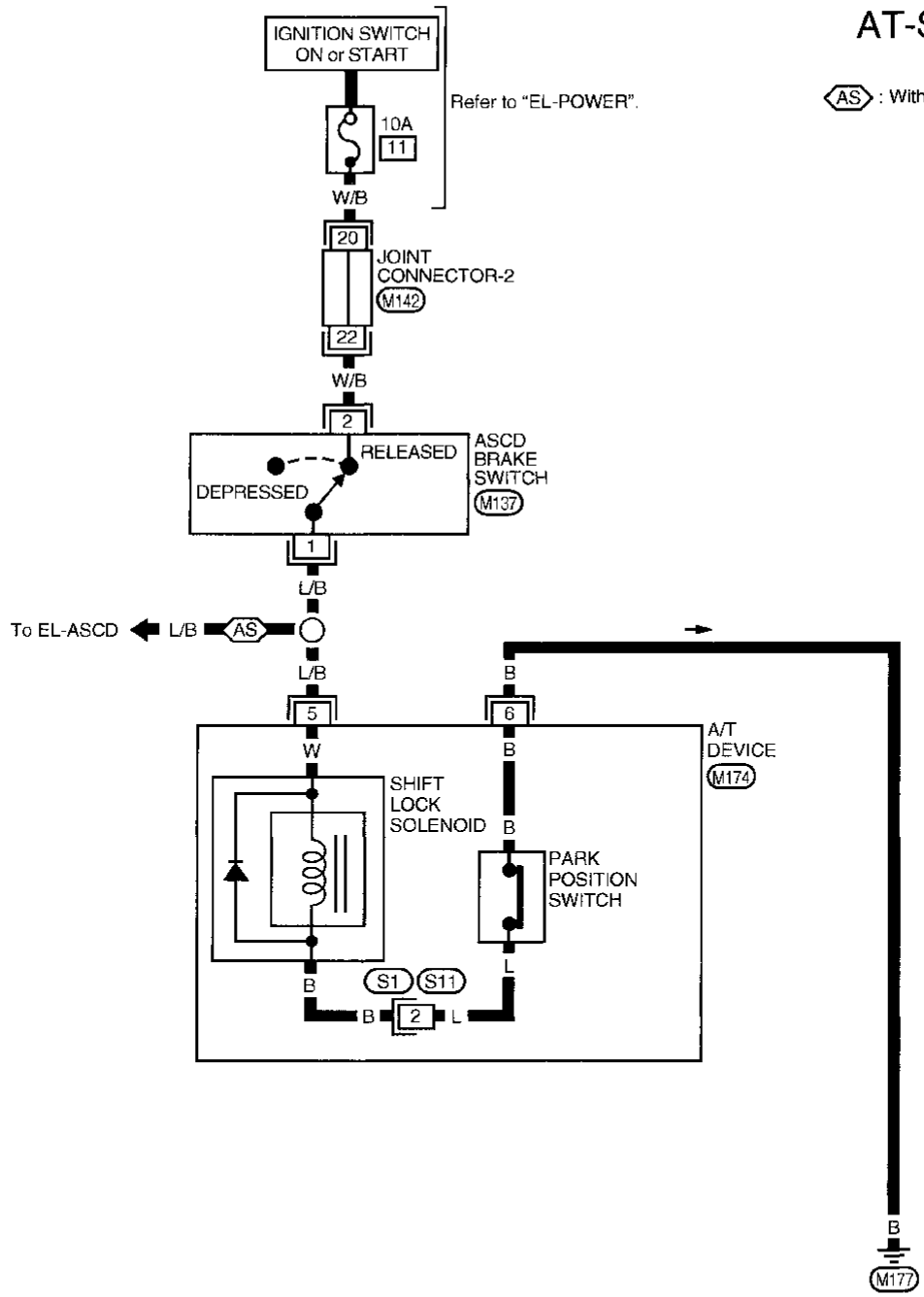

Refer to last page (Foldout page).
M142

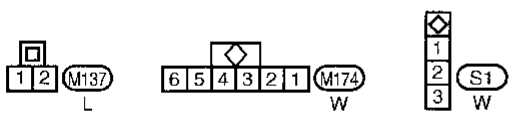

AAT037A

Diagnostic Procedure

SYMPTOM 1:

- **Selector lever cannot be moved from "P" position with key in ON position and brake pedal applied.**
- **Selector lever can be moved from "P" position with key in ON position and brake pedal released.**
- **Selector lever can be moved from "P" position when key is removed from key cylinder.**

SYMPTOM 2:

Ignition key cannot be removed when selector lever is set to "P" position. It can be removed when selector lever is set to any position except "P".

Check key interlock cable for damage. → NG → Repair key interlock cable. Refer to "Key Interlock Cable", AT-34.

OK ↓

Check selector lever position for damage. → NG → Check selector lever. Refer to "ON-VEHICLE SERVICE — Inhibitor Switch and Manual Control Linkage Adjustment", AT-39.

OK ↓

A

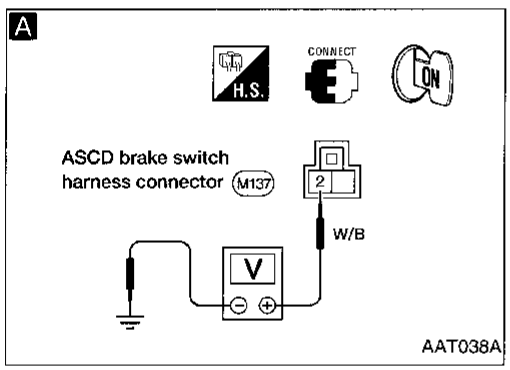

CHECK POWER SOURCE.

1. Turn ignition switch to ON position. (Do not start engine.)
2. Check voltage between ASCD brake switch harness connector terminal No. ② and ground.

Voltage: Battery voltage

NG → Check the following items:

- 10A fuse (No. 11, located in the fuse block)
- Harness for short or open between fuse and ASCD brake switch harness connector terminal No. ②
- Ignition switch (Refer to EL section.)
- Joint connector-2

OK ↓

B

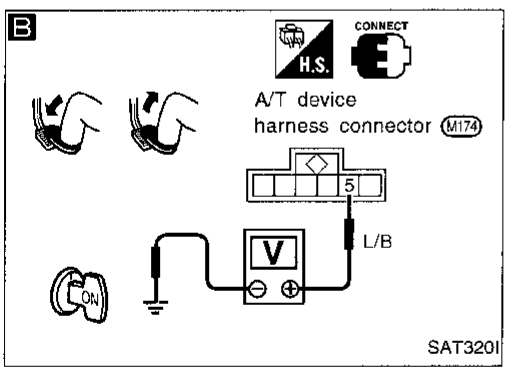

CHECK INPUT SIGNAL (ASCD CANCEL SWITCH).

1. Turn ignition switch to ON position. (Do not start engine.)
2. Check voltage between A/T device harness connector terminal No. ⑤ and ground.

Brake pedal	Voltage
Depressed	0V
Released	Battery voltage

NG → Check the following items:

- Harness for short or open between A/T device harness connector terminal No. ⑤ and ASCD brake switch harness connector terminal No. ①
- ASCD brake switch (Refer to "Component Check", AT-36.)

OK ↓

Ⓐ

(Go to next page.)

Diagnostic Procedure (Cont'd)

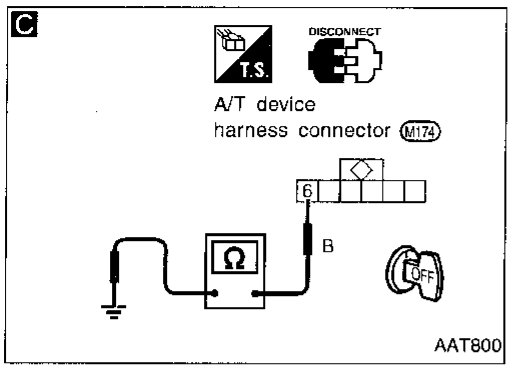

Ⓐ

C

CHECK GROUND CIRCUIT.
1. Turn ignition switch to OFF position.
2. Disconnect A/T device harness connector.
3. Check continuity between A/T device harness connector terminal No. ⑥ and ground.
Continuity should exist.

NG → Repair harness or connector.

OK ↓

CHECK PARK POSITION SWITCH.
(Refer to "Component Check", AT-36.)

NG → Replace park position switch.

OK ↓

CHECK SHIFT LOCK SOLENOID.
(Refer to "Component Check", AT-35.)

NG → Replace shift lock solenoid.

OK ↓

Reconnect A/T device harness connector.

↓

Turn ignition switch from OFF to ON position. (Do not start engine.)

↓

Recheck shift lock operation.

NG → Recheck harness connector connection.

OK ↓

INSPECTION END

Key Interlock Cable

Lock plate
Steering lock
Clip
Snap pin
Steering column
UNLOCK
LOCK
Slider
Adjuster holder
Rod
Casing cap
Key interlock cable
Bracket
AAT803

CAUTION:

- **Install key interlock cable in such a way that it will not be damaged by sharp bends, twists or interference with adjacent parts.**
- **After installing key interlock cable to control device, make sure that casing cap and bracket are firmly secured in their positions. If casing cap can be removed with an external load of less than 39.2 N (4.0 kg, 8.8 lb), replace key interlock cable with new one.**

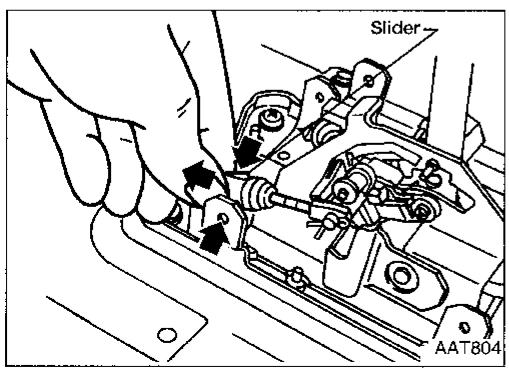

REMOVAL

Unlock slider from adjuster holder and remove rod from cable.

Key Interlock Cable (Cont'd)

INSTALLATION

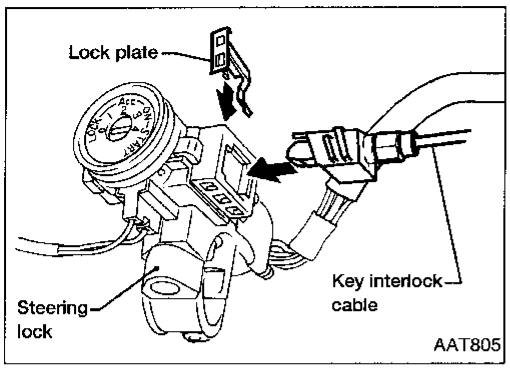

1. Set key interlock cable to steering lock assembly and install lock plate.
2. Clamp cable to steering column and fix to control cable with band.
3. Set control lever to "P" position.

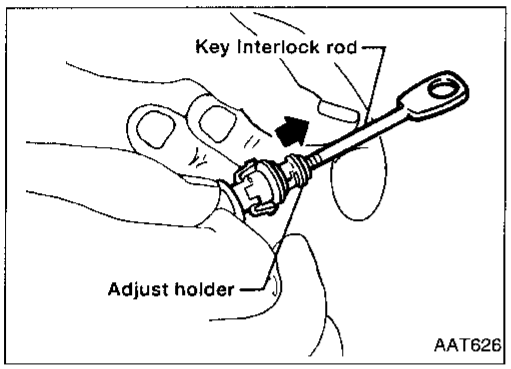

4. Insert interlock rod into adjuster holder.

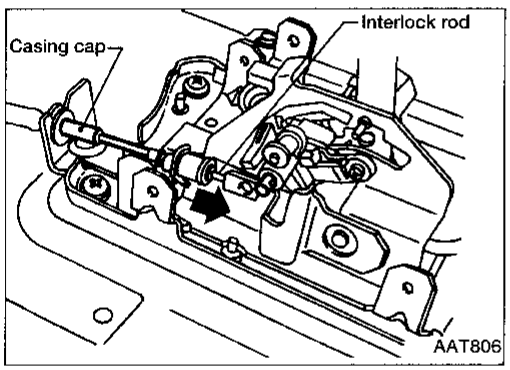

5. Install casing cap to bracket.
6. Move slider in order to fix adjuster holder to interlock rod.

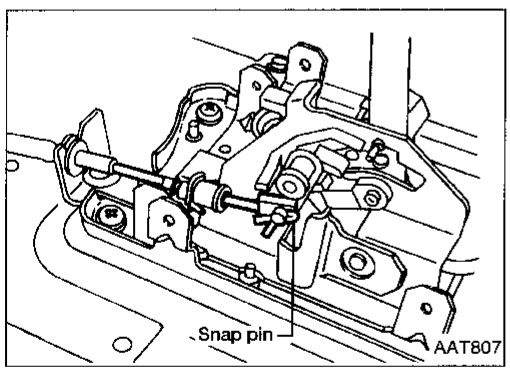

7. Install snap pin.

Component Check

SHIFT LOCK SOLENOID

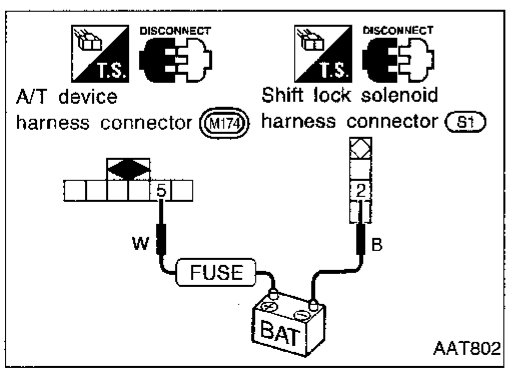

- Check operation by applying battery voltage to A/T device and shift lock solenoid harness terminal.

Component Check (Cont'd)

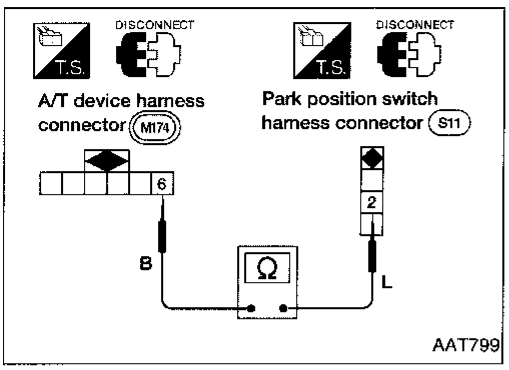

PARK POSITION SWITCH

- Check continuity between A/T device harness connector terminal ⑥ and park position switch harness connector terminal ②

Condition	Continuity
When selector lever is set in "P" position and selector lever button is released	Yes
Except above	No

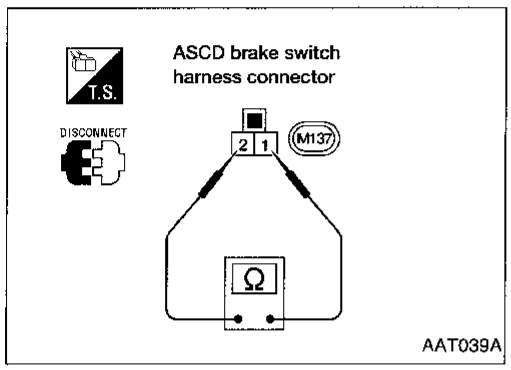

ASCD BRAKE SWITCH

- Check continuity between terminals ① and ②

Condition	Continuity
When brake pedal is depressed	No
When brake pedal is released	Yes

Check ASCD brake switch after adjusting brake pedal. Refer to BR section ("Adjustment", BRAKE PEDAL AND BRACKET").

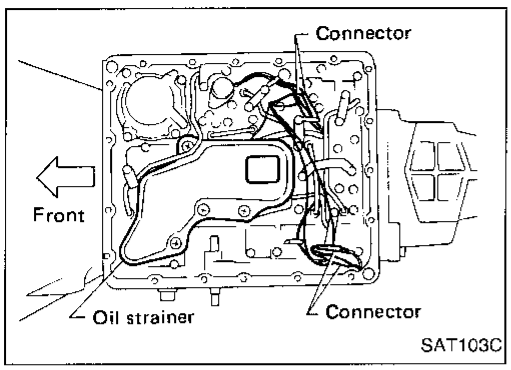

Control Valve Assembly and Accumulators Inspection

1. Drain ATF from drain plug.
2. Remove oil pan and gasket.
3. Remove oil strainer.
4. Disconnect harness connector.

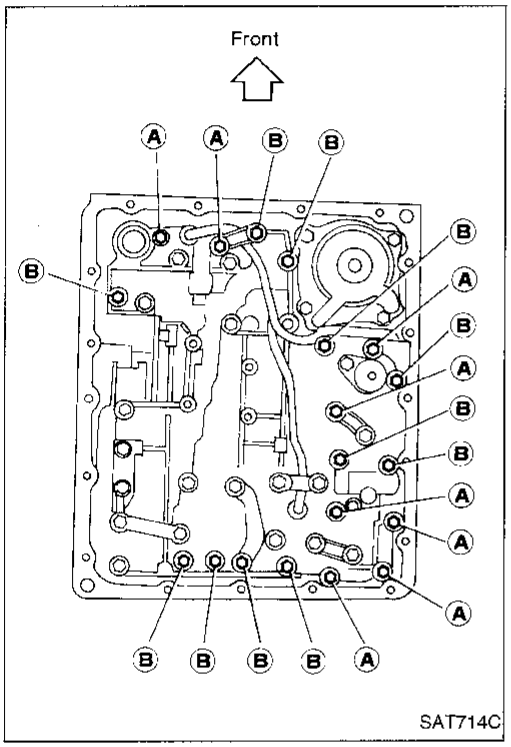

5. Remove control valve assembly by removing fixing bolts.

Bolt length and location

Bolt symbol	ℓ mm (in)
Ⓐ	33 (1.30)
Ⓑ	45 (1.77)

Be careful not to drop manual valve out of valve body.

6. Remove solenoids and valves from valve body if necessary.
7. Remove terminal cord assembly if necessary.

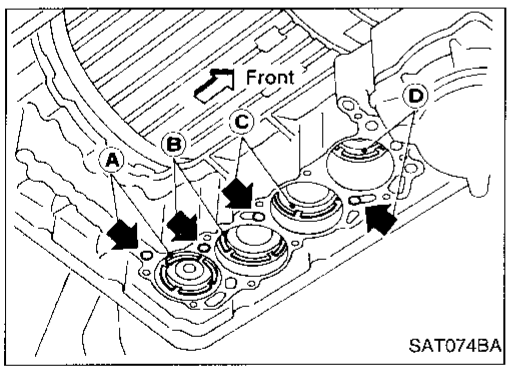

8. Remove accumulators Ⓐ, Ⓑ, Ⓒ and Ⓓ by applying compressed air if necessary.

Hold each piston with rag.

9. Reinstall any part removed.

Always use new sealing parts.

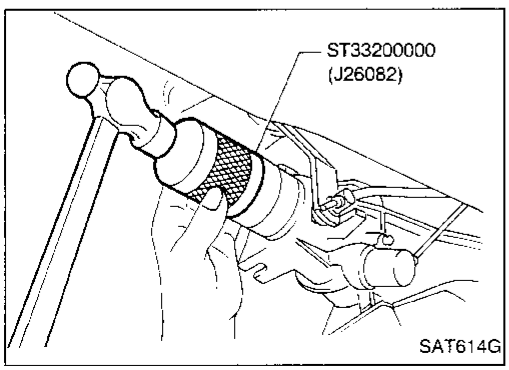

Rear Oil Seal Replacement

1. Remove propeller shaft from vehicle. Refer to PD section ("Removal and Installation", "PROPELLER SHAFT").
2. Remove rear oil seal.
3. Install rear oil seal.
   - **Apply ATF before installing.**
4. Reinstall any part removed.

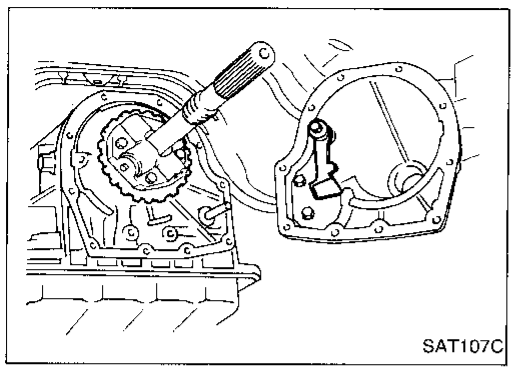

Parking Components Inspection

1. Remove propeller shaft from vehicle. Refer to PD section ("Removal and Installation", "PROPELLER SHAFT").
2. Support A/T assembly with a jack.
3. Remove rear engine mounting member.
4. Remove rear extension from transmission case.
5. Replace parking components if necessary.
6. Reinstall any part removed.

- **Always use new sealing parts.**

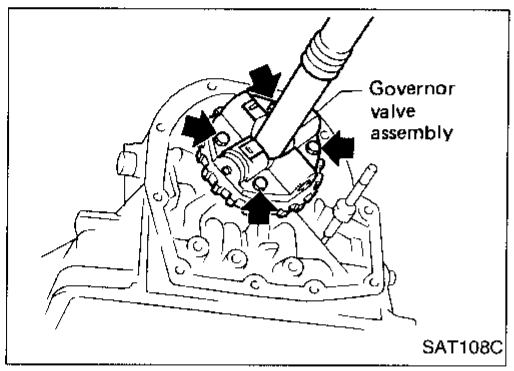

Governor Valve

1. Remove propeller shaft from vehicle. Refer to PD section ("Removal and Installation", "PROPELLER SHAFT").
2. Support A/T assembly with a jack.
3. Remove rear engine mounting member from A/T assembly.
4. Remove rear extension from transmission case.
5. Remove governor valve assembly.
6. Inspect and repair governor valve assembly. Refer to REPAIR FOR COMPONENT PARTS, AT-72.

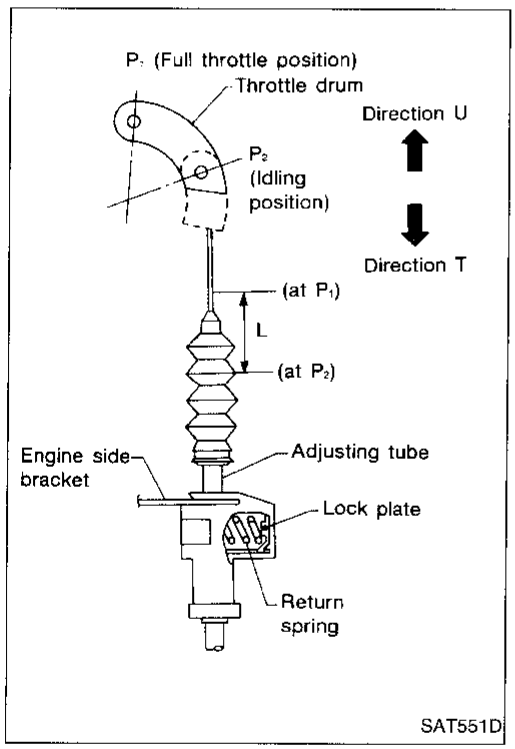

Throttle Wire Adjustment

1. Turn ignition switch OFF.
2. While pressing lock plate, move adjusting tube in Direction T.
3. Release lock plate. (Adjusting tube is locked at this time.)
4. Move throttle drum from P_2 (Idling position) to P_1 (Full throttle position) quickly and release.
5. Ensure that throttle wire stroke "L" is within the specified range, between full throttle and idle.
   Throttle wire stroke "L":
   38 - 42 mm (1.50 - 1.65 in)

- **Adjust throttle wire stroke after accelerator wire is installed and adjusted.**
- **When connecting throttle wire to throttle drum, do not use tools. Manually hook wire.**
- **Put mark on throttle wire for measuring wire stroke.**

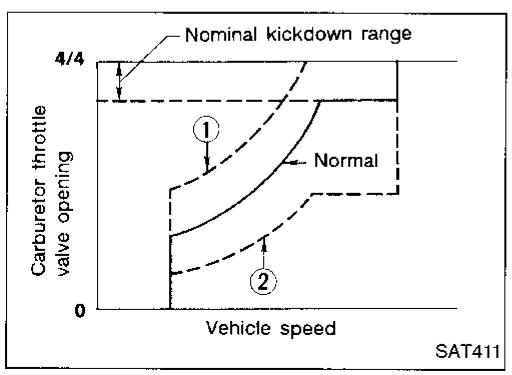

If throttle wire stroke is improperly adjusted, the following problems may arise.

- When the throttle drum fully-open position "P_1" is too far toward Direction T, the shift schedule will be as shown by ② in the figure, and the kickdown range will greatly increase.
- When the throttle drum fully-open position "P_1" is too far toward Direction U, the shift schedule will be as shown by ① in the figure, and kickdown will not occur.

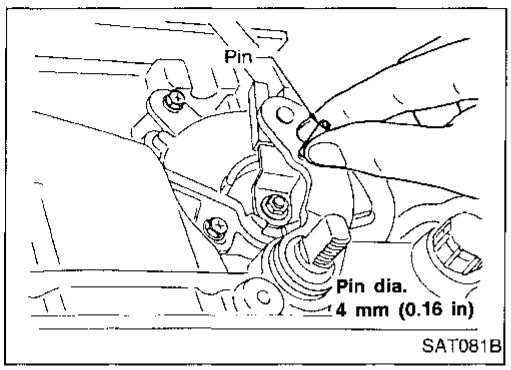

Inhibitor Switch Adjustment

1. Remove manual control linkage from manual shaft of A/T assembly.
2. Set manual shaft of A/T assembly in "N" position.
3. Loosen inhibitor switch fixing bolts.
4. Use a 4 mm (0.157 in) pin for this adjustment.

a. Insert the pin straight into the manual shaft adjustment hole.
b. Rotate inhibitor switch until the pin can also be inserted straight into hole in inhibitor switch.

5. Tighten inhibitor switch fixing bolts.
6. Remove pin from adjustment hole after adjusting inhibitor switch.
7. Reinstall any part removed.
8. Adjust control linkage. Refer to "Manual Control Linkage Adjustment".
9. Check operation of inhibitor switch. Refer to AT-23.

Manual Control Linkage Adjustment

Move the selector lever from the "P" position to "1" position. You should be able to feel the detents in each position.
If the detents cannot be felt or the pointer indicating the position is improperly aligned, the linkage needs adjustment.

1. Place selector lever in "P" position.
2. Loosen lock nuts.

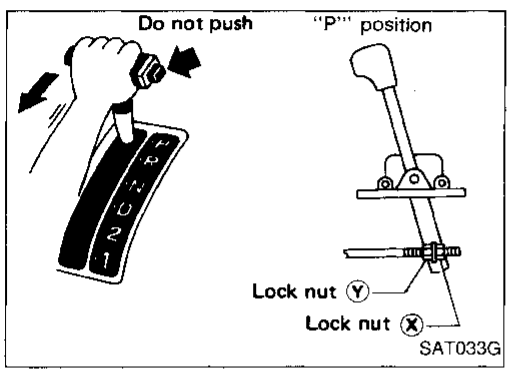

3. Tighten lock nut Ⓧ until it touches trunnion, pulling selector lever toward "R" position side without pushing button.
4. Back off lock nut Ⓧ 1 turn and tighten lock nut Ⓨ to the specified torque.
   Lock nut:
   [O]: 11 - 15 N·m
   (1.1 - 1.5 kg-m, 8 - 11 ft-lb)
5. Move selector lever from "P" position to "1" position. Make sure that selector lever can move smoothly.

Removal

CAUTION:
Before separating the A/T assembly from engine, remove the crankshaft position sensor (OBD) from the A/T assembly. Be careful not to damage sensor.

1. Disconnect battery negative terminal.
2. Remove fluid charging pipe from A/T assembly and plug opening.
3. Remove oil cooler pipe from A/T assembly and plug opening.
4. Remove propeller shaft.
   Refer to PD section ("Removal and Installation", "PROPELLER SHAFT").

- **Insert plug into rear oil seal after removing rear propeller shaft.**
- **Be careful not to damage spline, sleeve yoke and rear oil seal.**

5. Remove A/T control linkage from selector lever.
6. Disconnect A/T harness connectors.

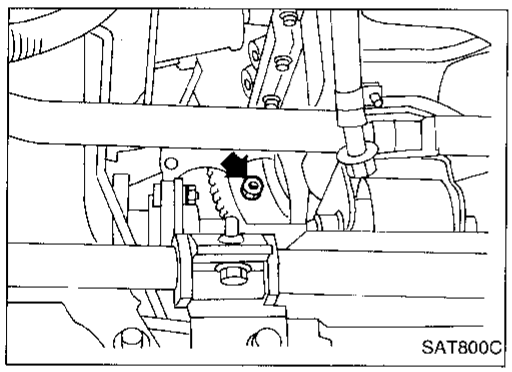

7. Remove starter motor.
8. Remove bolts securing torque converter to drive plate.

- **Rotate crankshaft to gain access to securing bolts.**

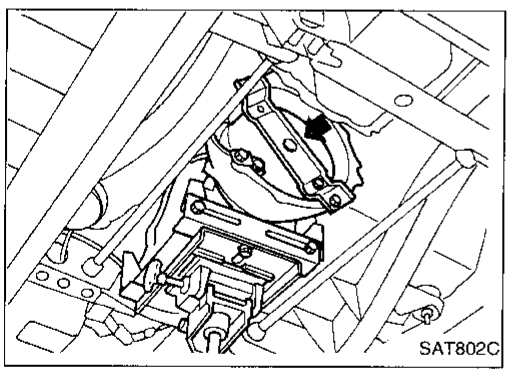

9. Support A/T assembly with a jack.
10. Remove rear mounting bracket from body and A/T assembly.
    Refer to EM section ("ENGINE REMOVAL").
11. Remove bolts securing A/T assembly to engine.
12. Pull A/T assembly backwards.

- **Secure torque converter to prevent it from dropping.**
- **Secure A/T assembly to a jack.**

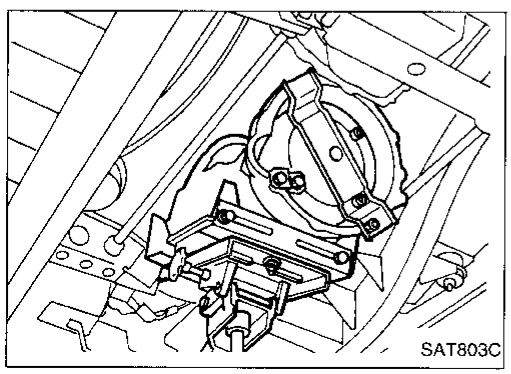

13. Slant and lower A/T assembly.

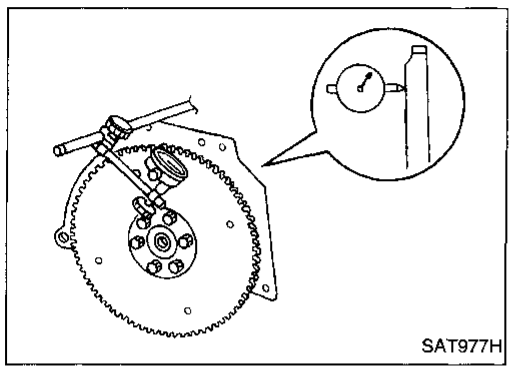

Installation

1. Check drive plate runout.

CAUTION:
Do not allow any magnetic materials to contact the ring gear teeth.

Maximum allowable runout:
Refer to EM section ("Inspection", "CYLINDER BLOCK").

If this runout is out of specification, replace drive plate with ring gear.

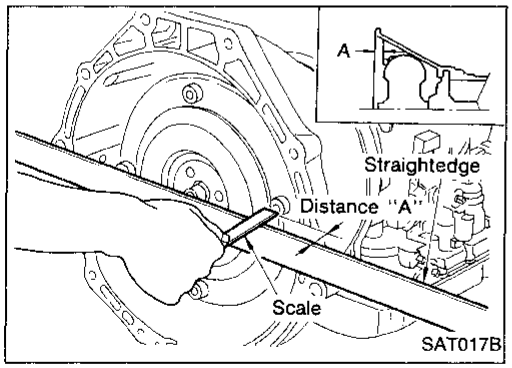

2. When connecting torque converter to transmission, measure distance "A" to be certain that they are correctly assembled.

Distance "A":
26.0 mm (1.024 in) or more

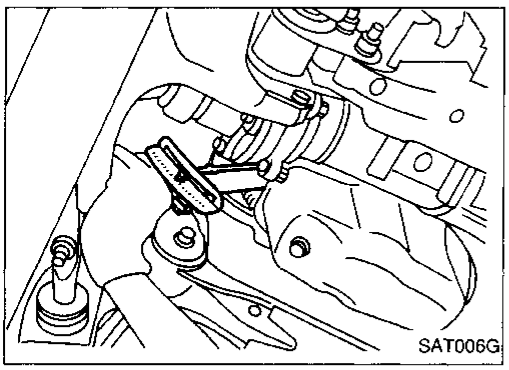

3. Install converter to drive plate.

- **With converter installed, rotate crankshaft several turns to check that transmission rotates freely without binding.**

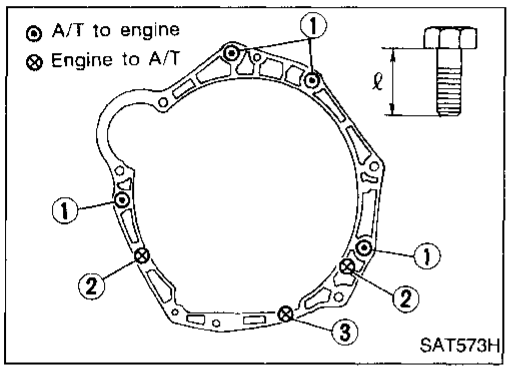

4. Tighten bolts securing transmission.

Tightening torque N·m (kg-m, ft-lb)	Bolt length "ℓ" mm (in)
① 39 - 49 (4.0 - 5.0, 29 - 36)	43 (1.69)
② 3 - 4 (0.3 - 0.4, 2.2 - 2.9)	16 (0.63)
③ 16 - 22 (1.6 - 2.2, 12 - 16)	16 (0.63)

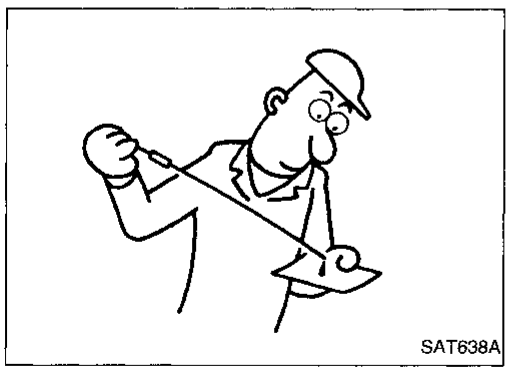

5. Reinstall any part removed.
6. Adjust manual control linkage. Refer to AT-39.
7. Adjust throttle wire. Refer to AT-38.
8. Adjust inhibitor switch. Refer to AT-39.
9. Refill transmission with ATF and check fluid level.
10. Move selector lever through all positions to be sure that transmission operates correctly.
    With parking brake applied, allow engine to idle. Move selector lever through "N" to "D", to "2", to "1" and to "R". A slight shock should be felt through the hand gripping the selector each time the transmission is shifted.
11. Perform road test. Refer to "ROAD TEST", AT-12.

SEC. 311•313•315

: N•m (kg-m, ft-lb)
: Apply anaerobic liquid gasket Loctite P/N 51813 or equivalent
(ATF) : Apply ATF
(P) : Apply petroleum jelly
★ : Select with proper thickness

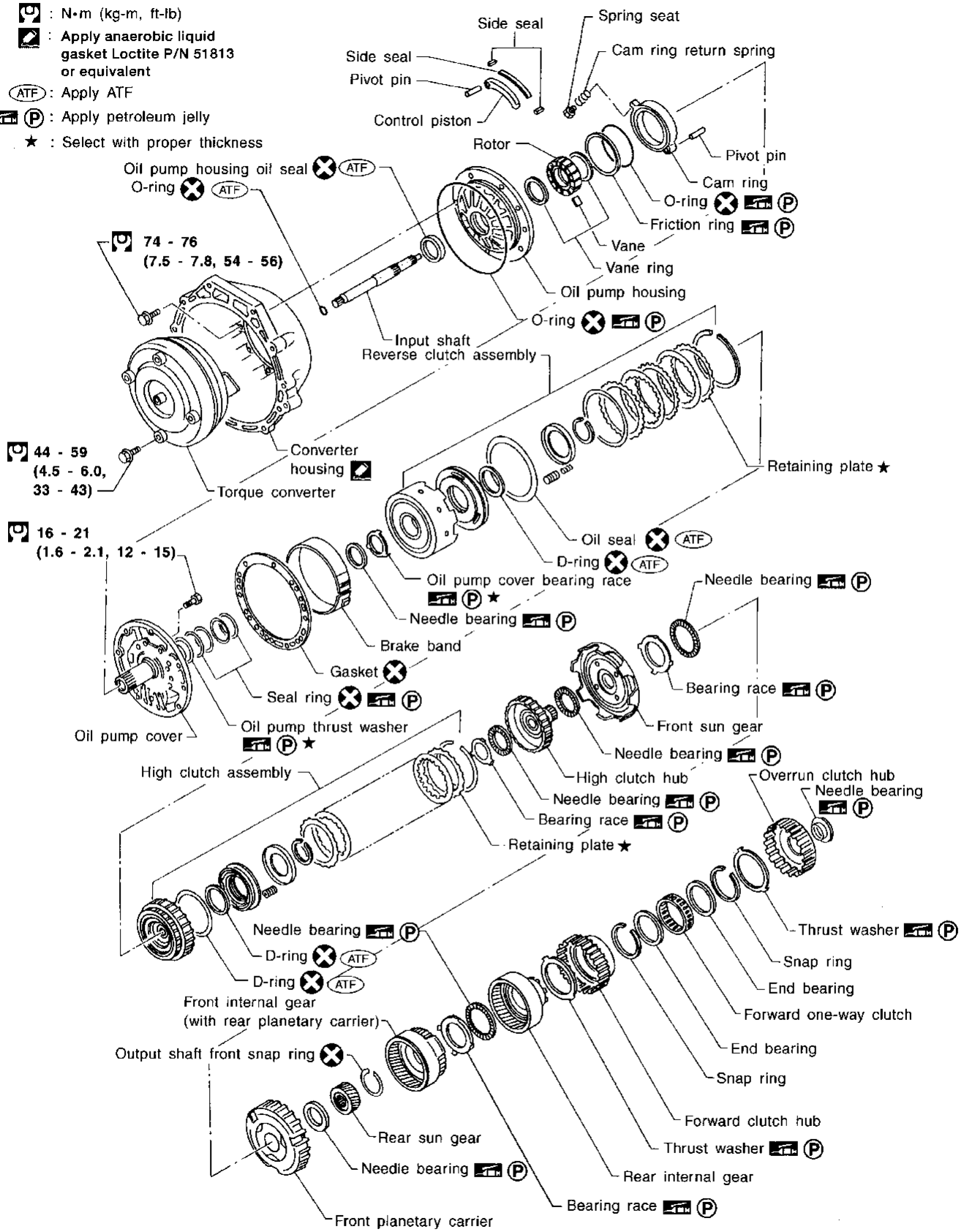

AAT811

SEC. 311•315•317

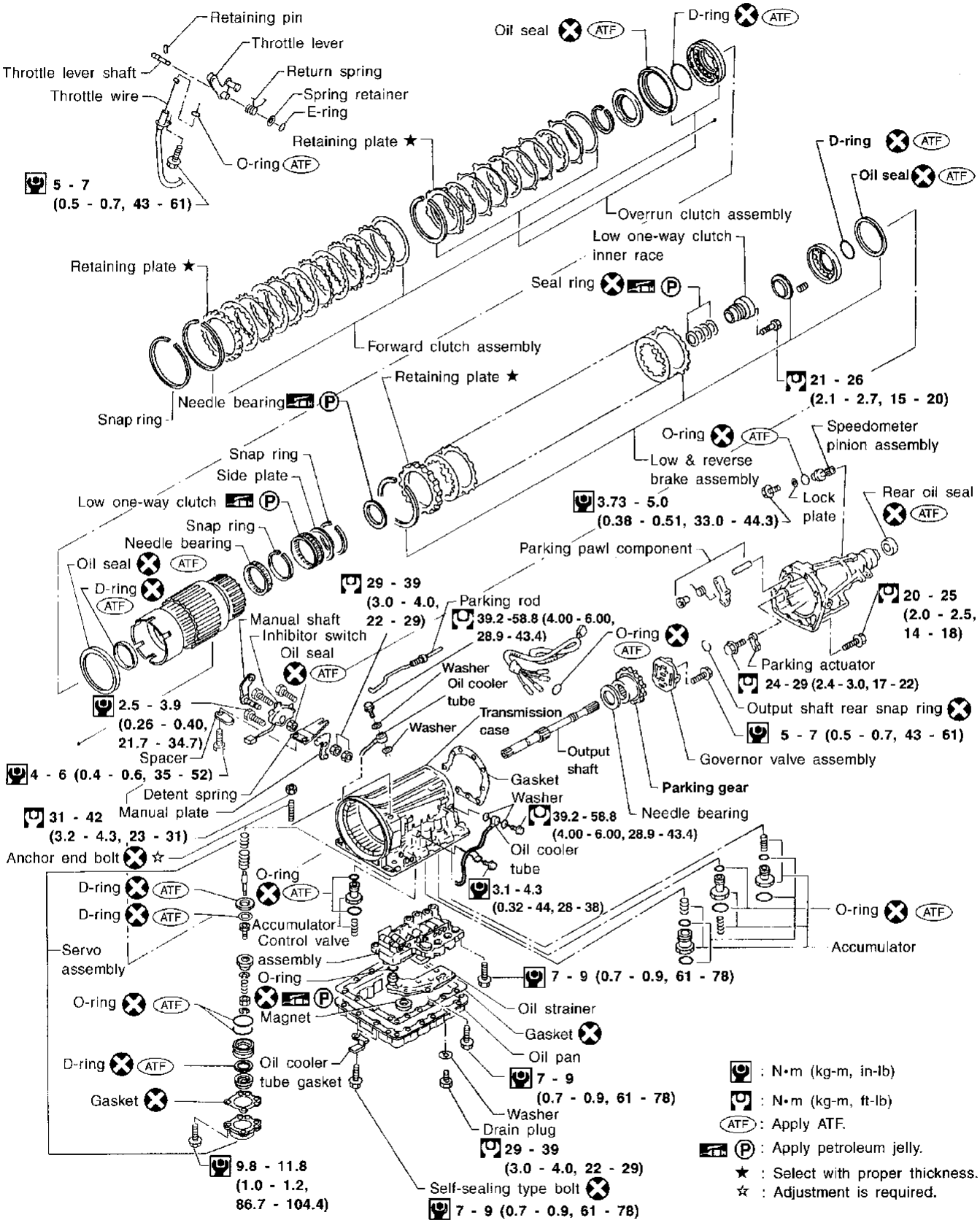

AAT041A

Oil Channel

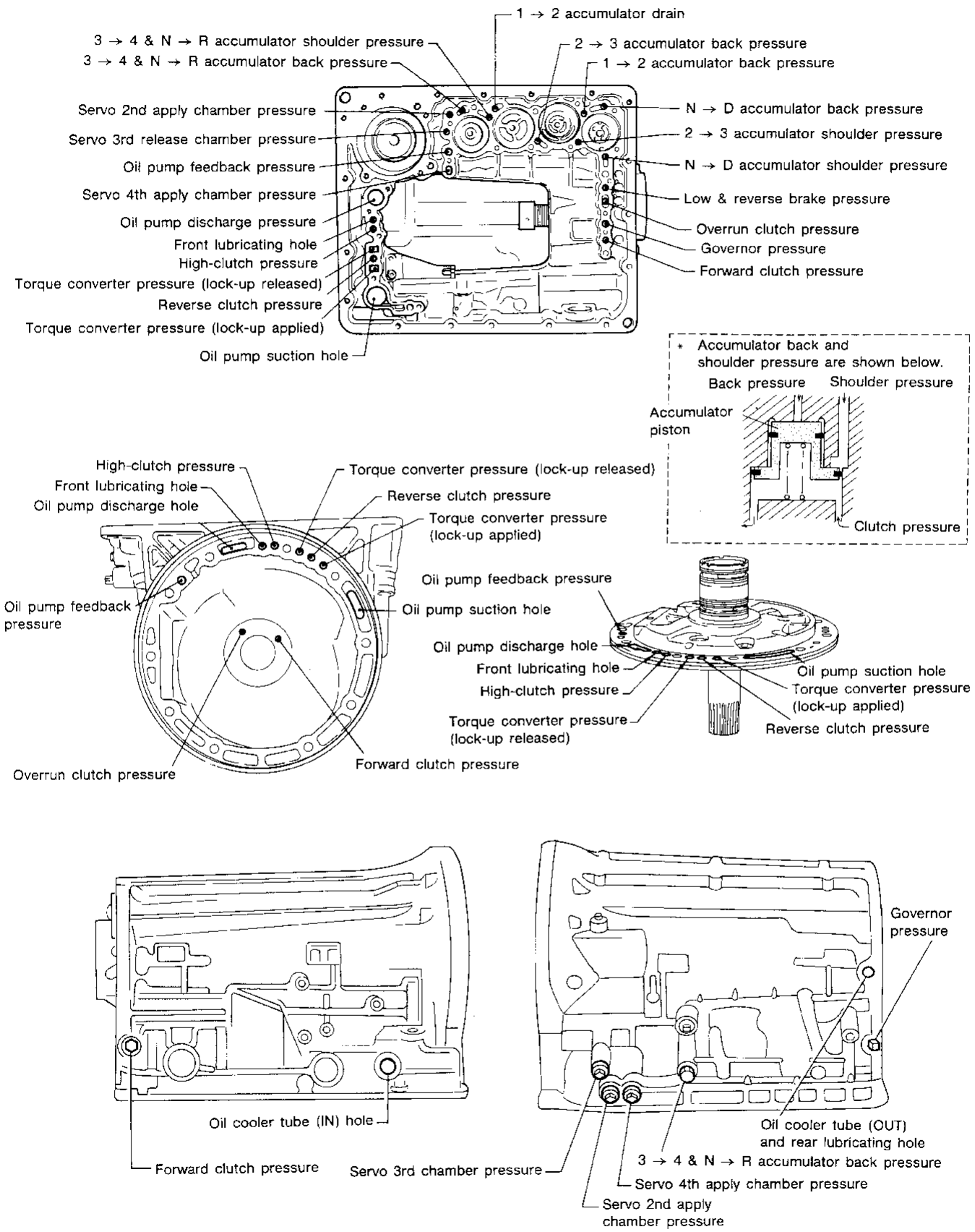

SAT173C

Locations of Needle Bearings, Thrust Washers and Snap Rings

Outer diameter of snap rings

Item number	Outer diameter mm (in)
②	161.0 (6.34)
③	140.1 (5.52)
④	156.4 (6.16)
⑥	142.0 (5.59)
⑦	159.2 (6.27)

Inner diameter of thrust washers

Item number	Color	Inner diameter mm (in)
①	Black	52.8 (2.08)
⑤	White	84.5 (3.33)

Outer diameter of needle bearings

Item number	Outer diameter mm (in)
⑧	47 (1.85)
⑨	53 (2.09)
⑩	53 (2.09)
⑪	78 (3.07)
⑫	53 (2.09)
⑬	78 (3.07)
⑭	57 (2.24)
⑮	78 (3.07)
⑯	64 (2.52)
⑰	53 (2.09)

Installation of one-piece bearings

Item number	Bearing race (black) location
⑫	Front
⑮	Rear side
⑯	Rear side
⑰	Rear side

Inner diameter of bearing races

Item number	Outer diameter mm (in)
⑪	58 (2.28)
⑬	58.8 (2.315)

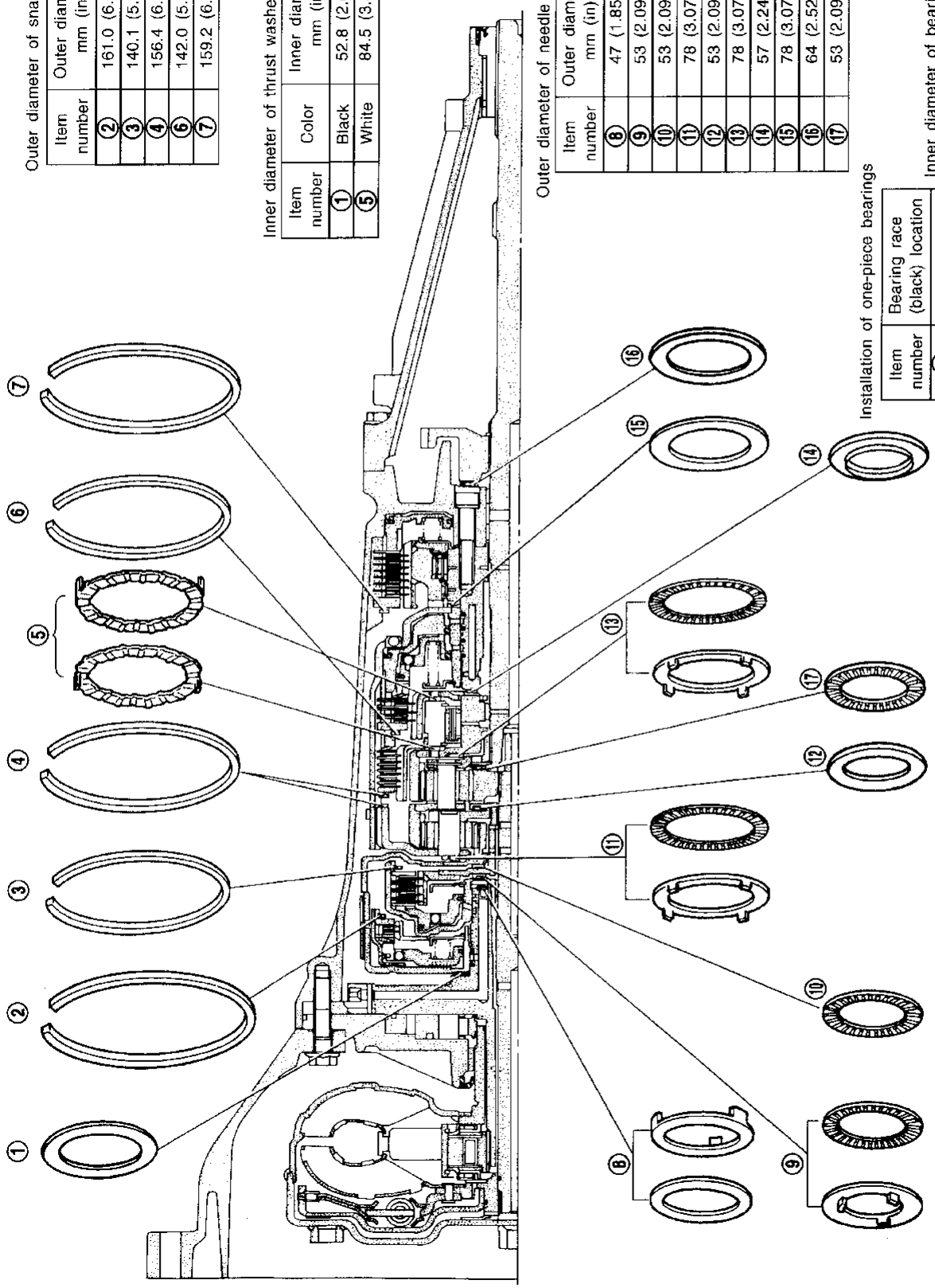

SAT375I

Disassembly

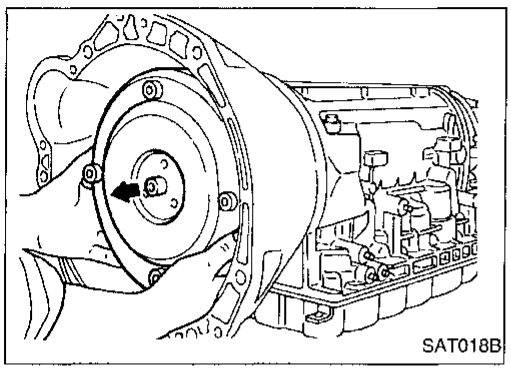

1. Removing torque converter by holding it firmly and turning while pulling straight out.

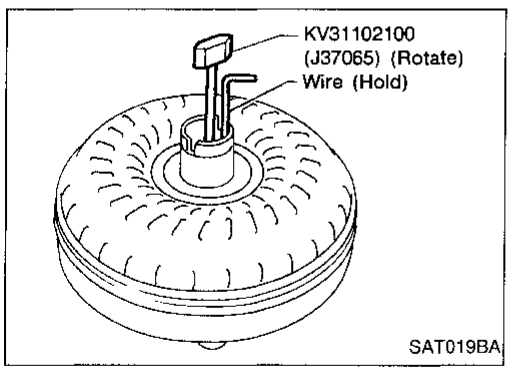

2. Check torque converter one-way clutch.
a. Insert Tool into spline of one-way clutch inner race.
b. Hook bearing support unitized with one-way clutch outer race with suitable wire.
c. Check that one-way clutch inner race rotates only clockwise with Tool while holding bearing support with wire.

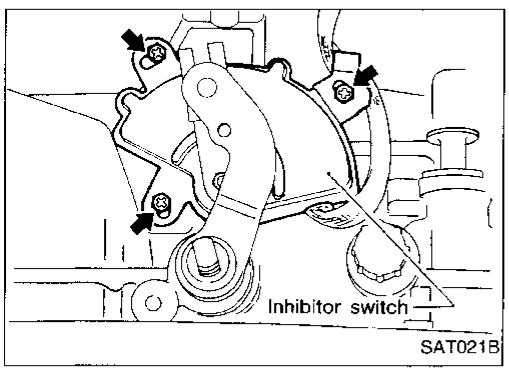

3. Remove inhibitor switch from transmission case.

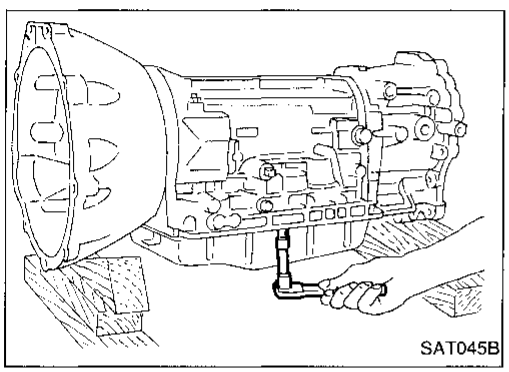

4. Remove oil pan.
a. Drain ATF from drain plug.
b. Raise oil pan by placing wooden blocks under converter housing and adapter case.
c. Separate the oil pan and transmission case.
- **Always place oil pan straight down so that foreign particles inside will not move.**

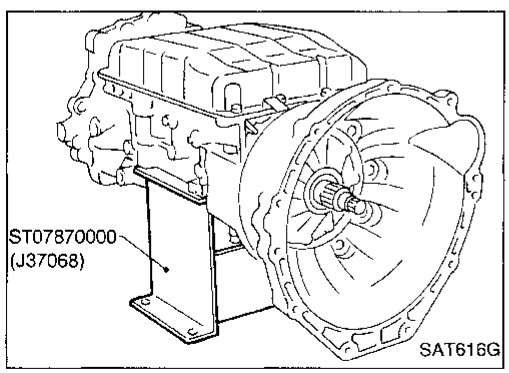

5. Place transmission into Tool with the control valve facing up.

Disassembly (Cont'd)

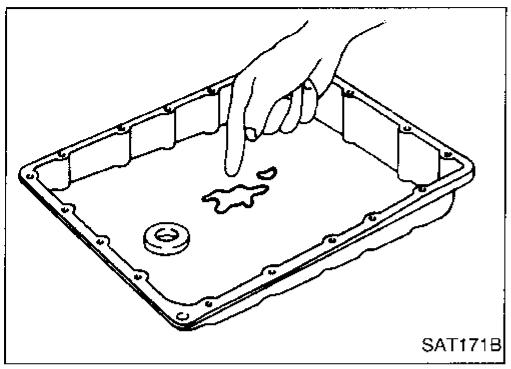

6. Check foreign materials in oil pan to help determine cause of malfunction. If the fluid is very dark, smells burned, or contains foreign particles, the frictional material (clutches, band) may need replacement. A tacky film that will not wipe clean indicates varnish buildup. Varnish can cause valves, servo, and clutches to stick and may inhibit pump pressure.

- **If frictional material is detected, replace radiator after repair of A/T. Refer to LC section ("Radiator", "ENGINE COOLING SYSTEM").**

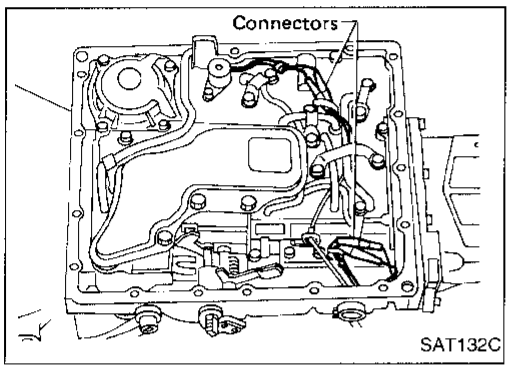

7. Remove torque converter clutch solenoid valve and overdrive cancel solenoid valve connectors.

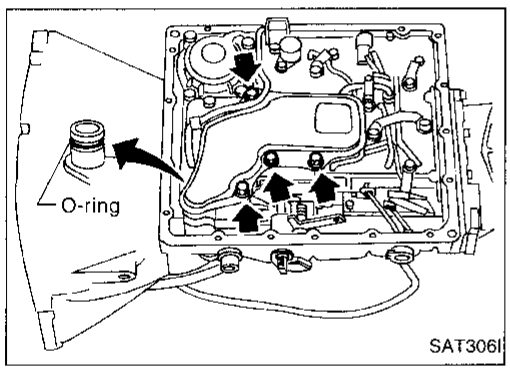

8. Remove oil strainer.
a. Remove oil strainer from control valve assembly. Then remove O-ring from oil strainer.

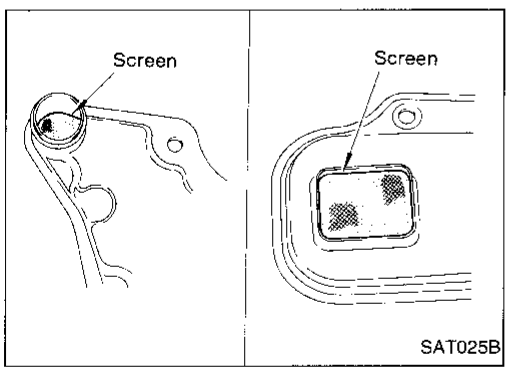

b. Check oil strainer screen for damage.

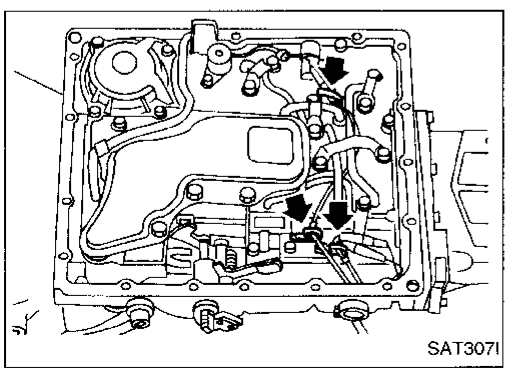

9. Remove control valve assembly.
a. Straighten terminal clips to free terminal cords then remove terminal clips.

Disassembly (Cont'd)

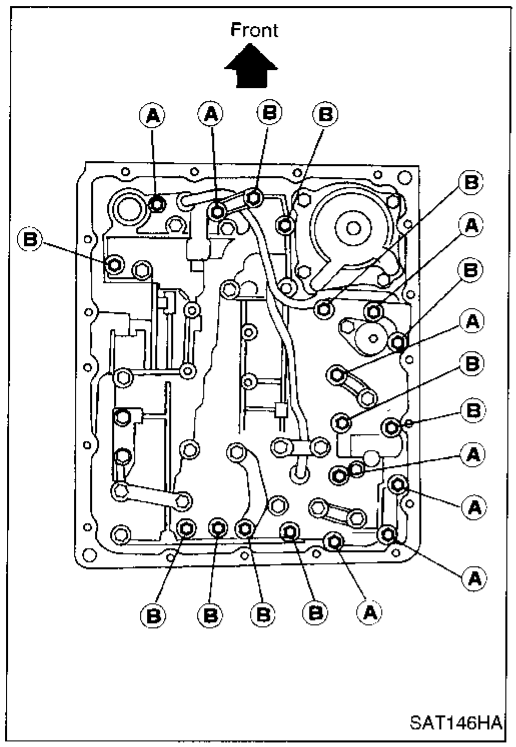

b. Remove bolts Ⓐ and Ⓑ, and remove control valve assembly from transmission.

Bolt	ℓ mm (in) ℓ
Ⓐ	33 (1.30)
Ⓑ	45 (1.77)

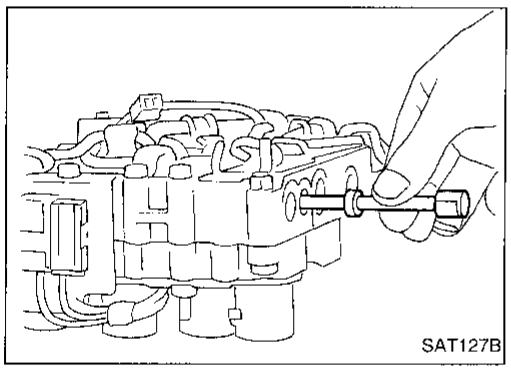

c. Remove manual valve from control valve assembly.

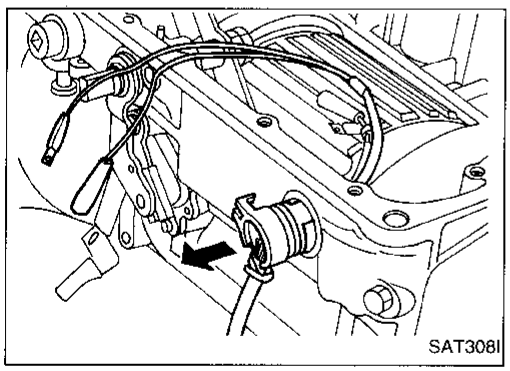

10. Remove terminal cord assembly from transmission case while pushing on stopper.

- **Be careful not to damage cord.**
- **Do not remove terminal cord assembly unless it is damaged.**

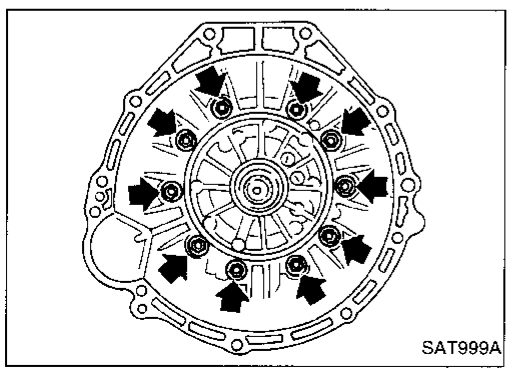

11. Remove converter housing.

a. Remove converter housing from transmission case.

b. Remove traces of sealant.

- **Be careful not to scratch converter housing.**

Disassembly (Cont'd)

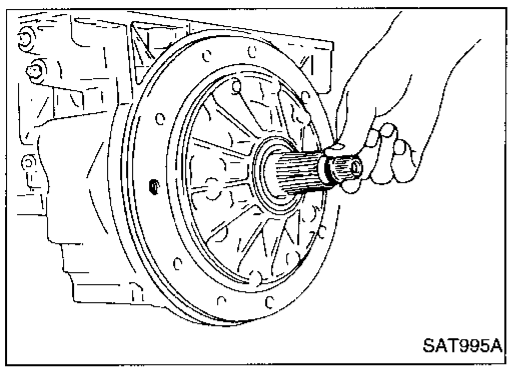

12. Remove O-ring from input shaft.

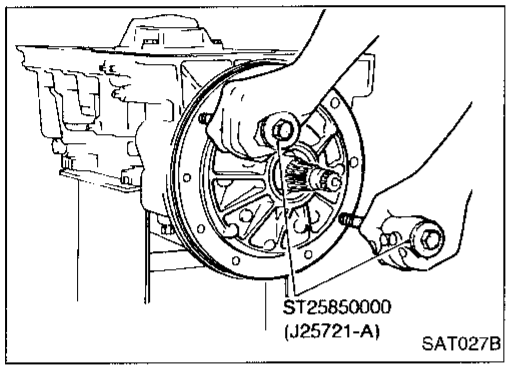

13. Remove oil pump assembly.
a. Attach Tool to oil pump assembly and extract it evenly from transmission case.

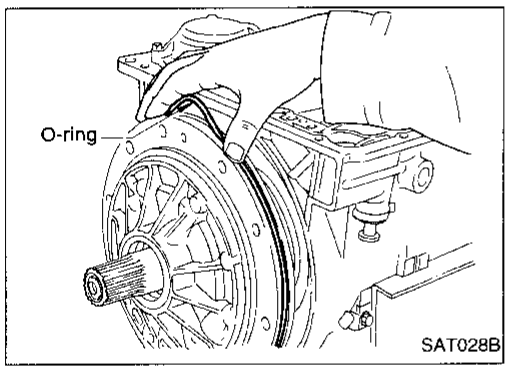

b. Remove O-ring from oil pump assembly.
c. Remove traces of sealant from oil pump housing.
- **Be careful not to scratch pump housing.**

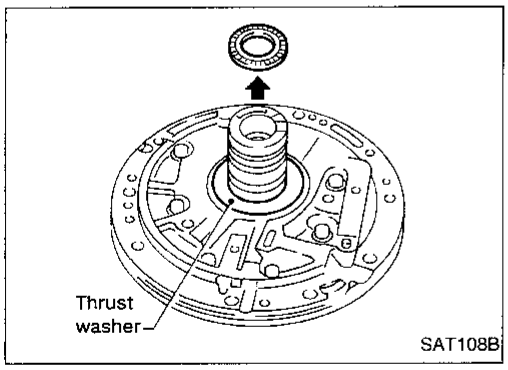

d. Remove needle bearing and thrust washer from oil pump assembly.

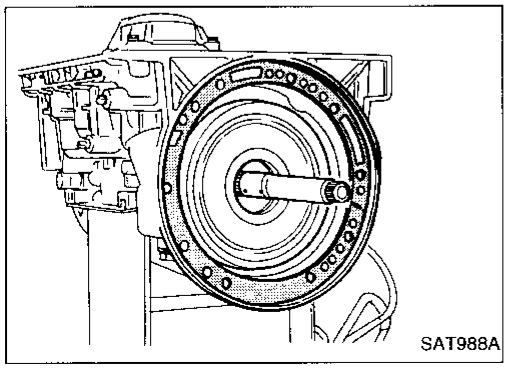

14. Remove input shaft and oil pump gasket.

Disassembly (Cont'd)

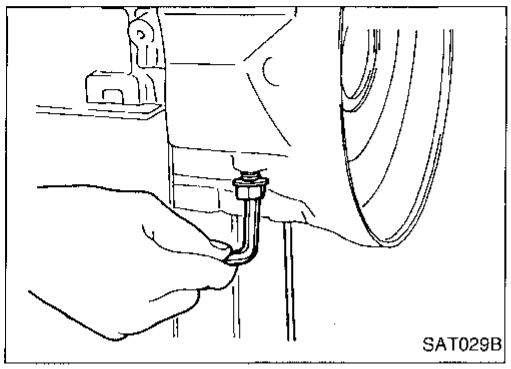

15. Remove brake band and band strut.
a. Loosen lock nut and remove band servo anchor end pin from transmission case.

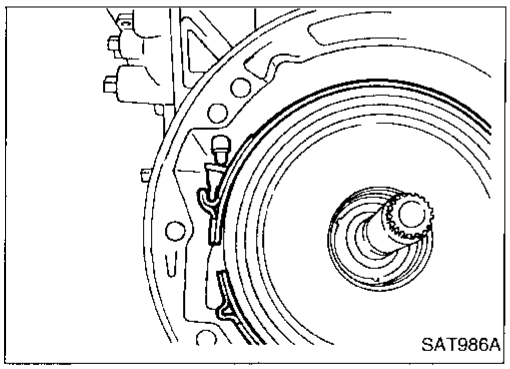

b. Remove brake band and band strut from transmission case.

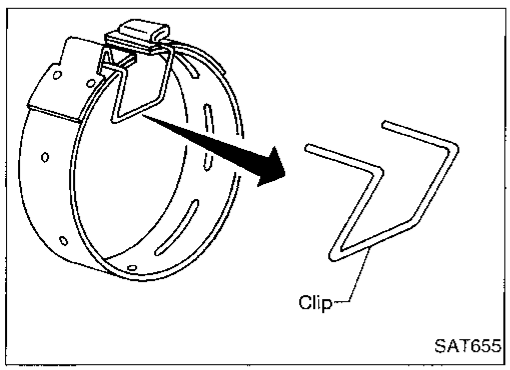

c. Hold brake band in a circular shape with clip.
Check brake band facing for damage, cracks, wear or burns.

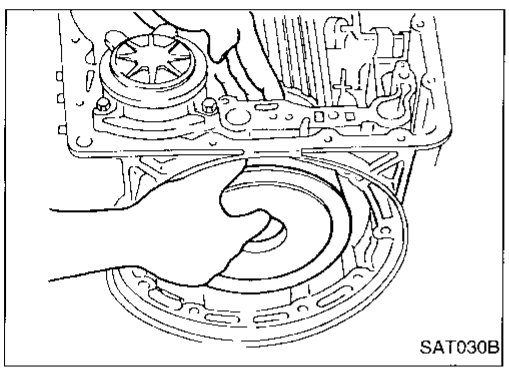

16. Remove front side clutch and gear components.
a. Remove clutch pack (reverse clutch, high clutch and front sun gear) from transmission case.

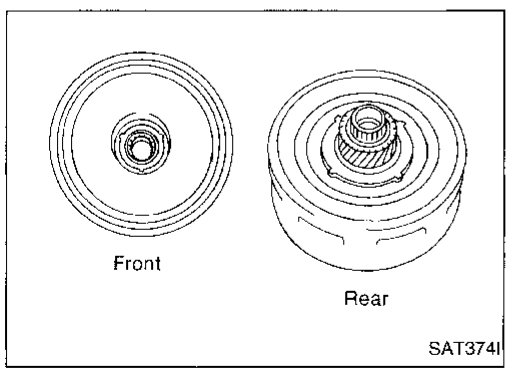

b. Remove front bearing race from clutch pack.
c. Remove rear bearing race from clutch pack.

Disassembly (Cont'd)

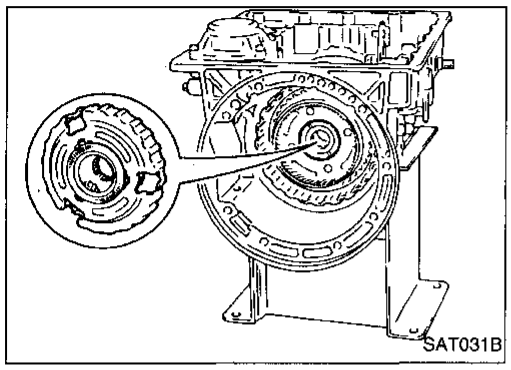

d. Remove front planetary carrier from transmission case.

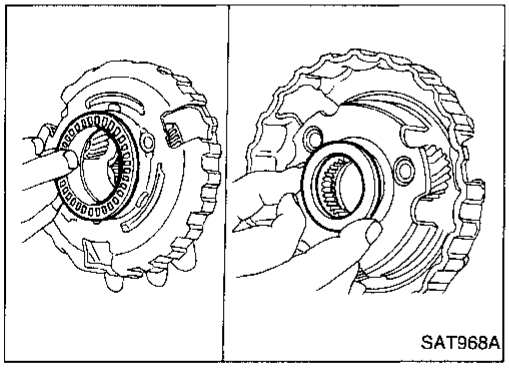

e. Remove front needle bearing from front planetary carrier.
f. Remove rear bearing from front planetary carrier.

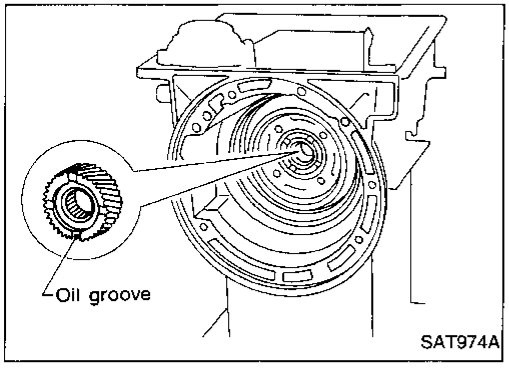

g. Remove rear sun gear from transmission case.

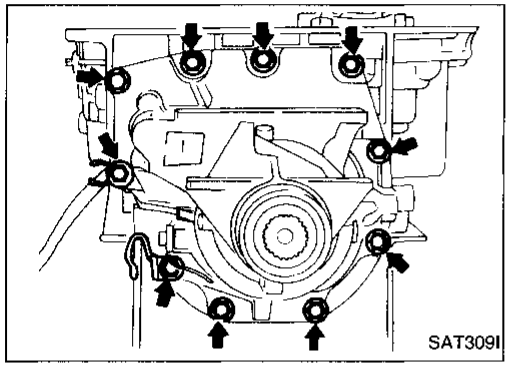

17. Remove rear extension case.
a. Remove rear extension case from transmission case.
b. Remove rear extension gasket from transmission case.

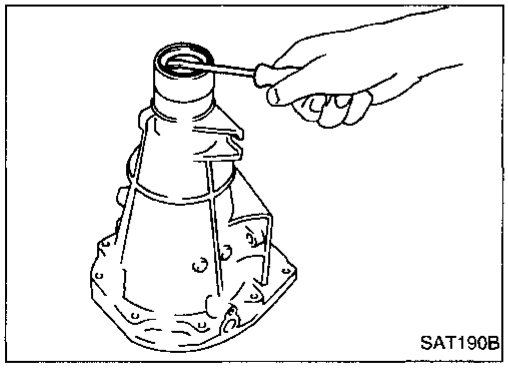

c. Remove oil seal from rear extension case.
- **Do not remove oil seal unless it is to be replaced.**

Disassembly (Cont'd)

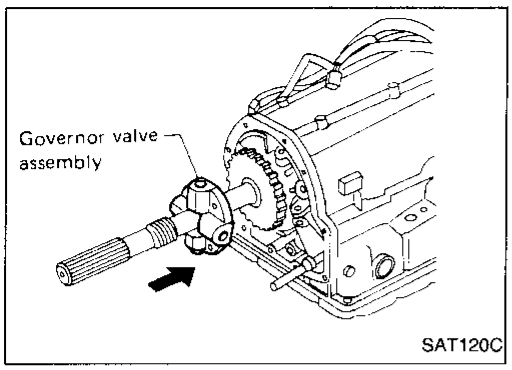

18. Remove output shaft and parking gear.
a. Remove governor valve assembly.

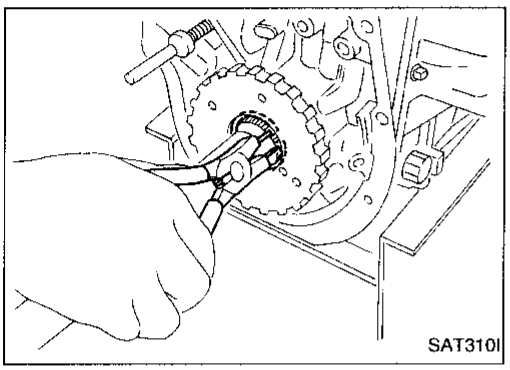

b. Remove rear snap ring from output shaft.

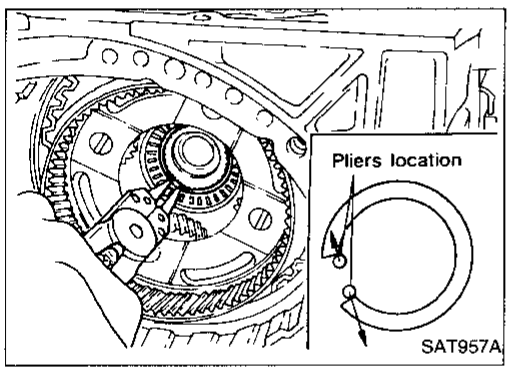

c. Slowly push output shaft all the way forward.
- **Do not use excessive force.**

d. Remove snap ring from output shaft.

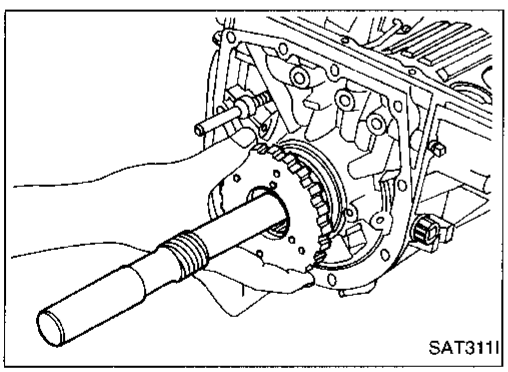

e. Remove output shaft and parking gear as a unit from transmission case.
f. Remove parking gear from output shaft.

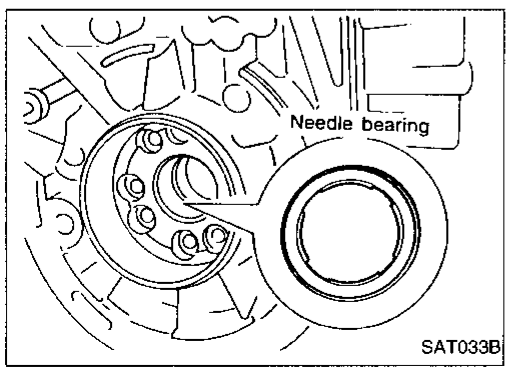

g. Remove needle bearing from transmission case.

Disassembly (Cont'd)

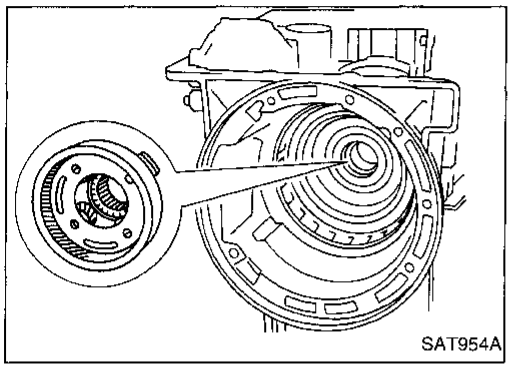
SAT954A

19. Remove rear side clutch and gear components.
a. Remove front internal gear.

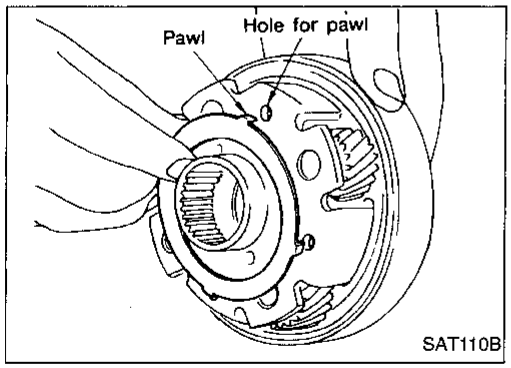

SAT110B

b. Remove bearing race from front internal gear.

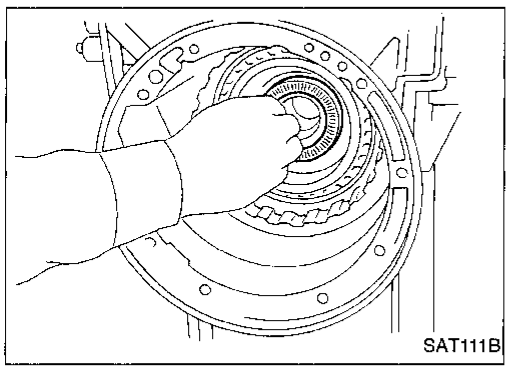
SAT111B

c. Remove needle bearing from rear internal gear.

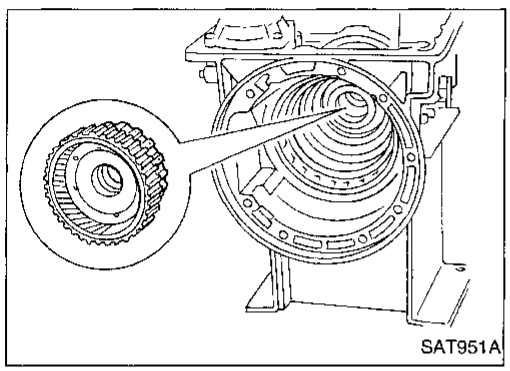
SAT951A

d. Remove rear internal gear, forward clutch hub and overrun clutch hub as a set from transmission case.

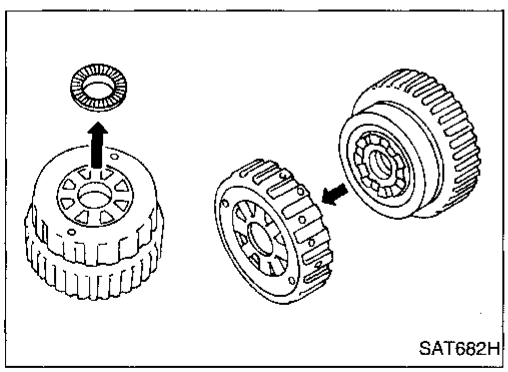
SAT682H

e. Remove needle bearing from overrun clutch hub.
f. Remove overrun clutch hub from rear internal gear and forward clutch hub.

Disassembly (Cont'd)

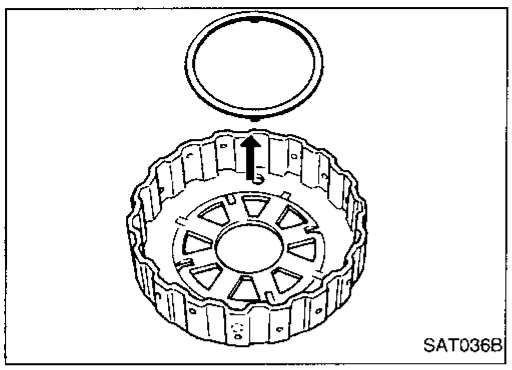

g. Remove thrust washer from overrun clutch hub.

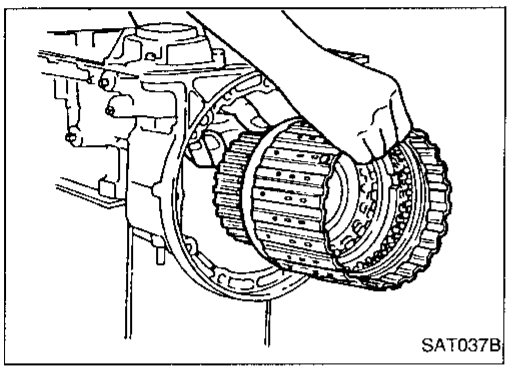

h. Remove forward clutch assembly from transmission case.

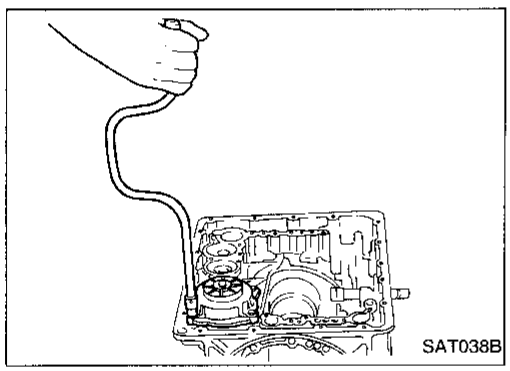

20. Remove band servo and accumulator components.
a. Remove band servo retainer from transmission case.

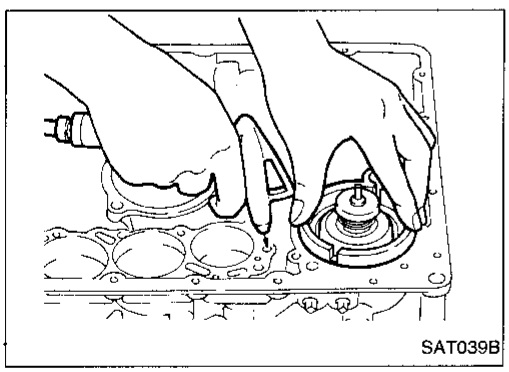

b. Apply compressed air to oil hole until band servo piston comes out of transmission case.
- **Hold piston with a rag and gradually direct air to oil hole.**

c. Remove return springs.

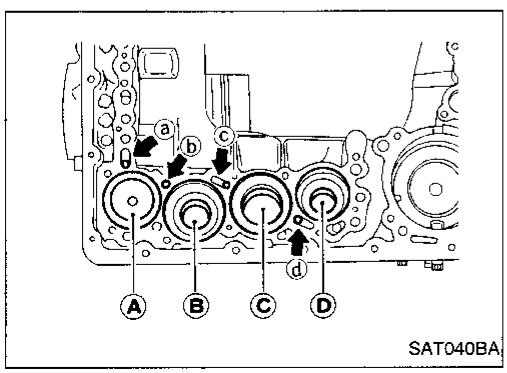

d. Remove springs from accumulator pistons Ⓑ, Ⓒ and Ⓓ.
e. Apply compressed air to each oil hole until piston comes out.
- **Hold piston with a rag and gradually direct air to oil hole.**

Identification of accumulator pistons	Ⓐ	Ⓑ	Ⓒ	Ⓓ
Identification of oil holes	ⓐ	ⓑ	ⓒ	ⓓ

Disassembly (Cont'd)

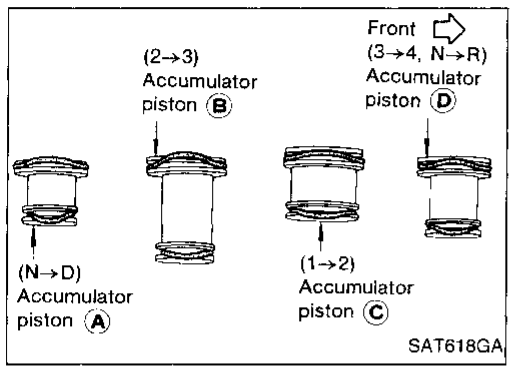

f. Remove O-ring from each piston.

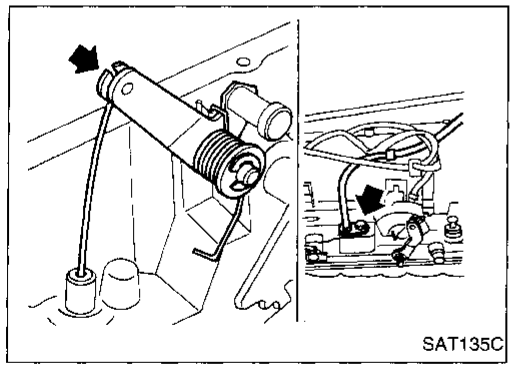

21. Remove throttle wire components if necessary.
a. Remove throttle wire from A/T assembly.

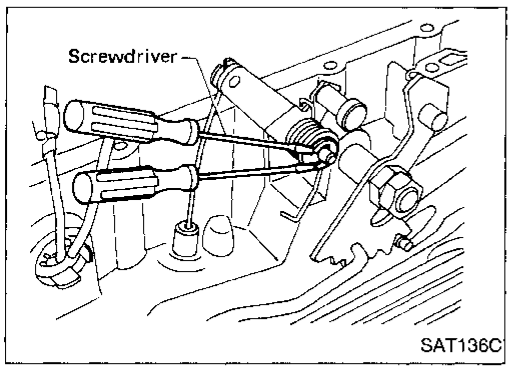

b. Remove throttle lever shaft E-ring.
c. Remove return spring.
d. Remove throttle lever.

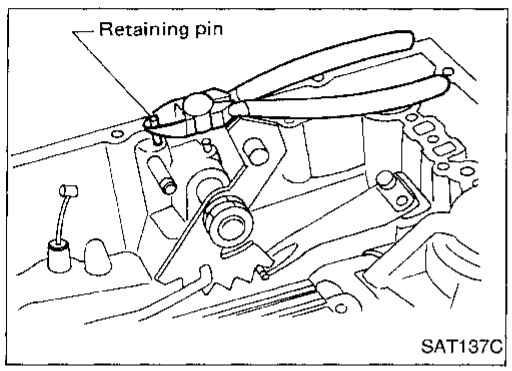

e. Remove throttle lever shaft retaining pin and throttle lever shaft.

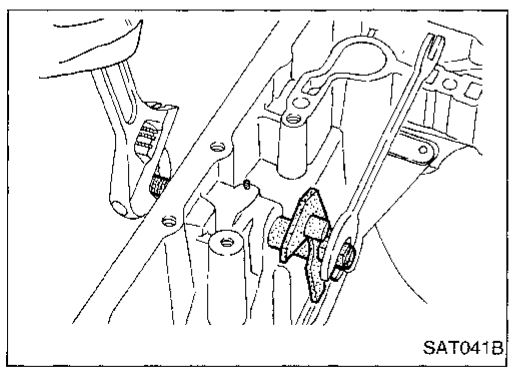

22. Remove manual shaft components, if necessary.
a. Hold width across flats of manual shaft (outside the transmission case) and remove lock nut from shaft.

Disassembly (Cont'd)

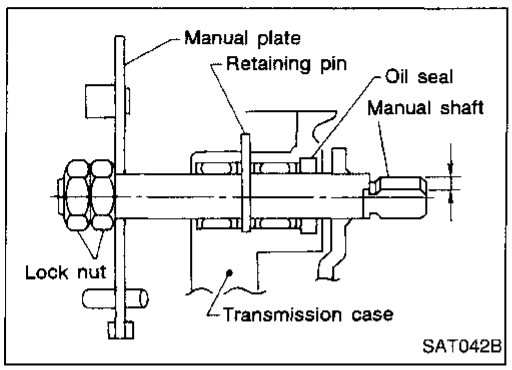

b. Remove retaining pin from transmission case.

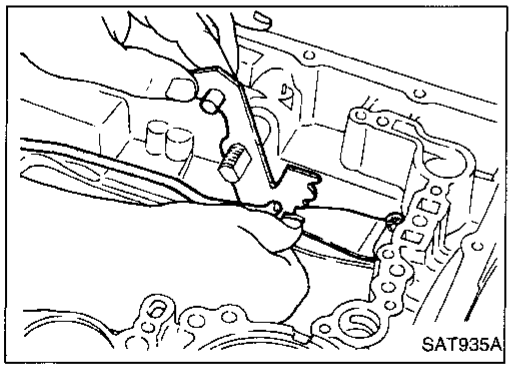

c. While pushing detent spring down, remove manual plate and parking rod from transmission case.

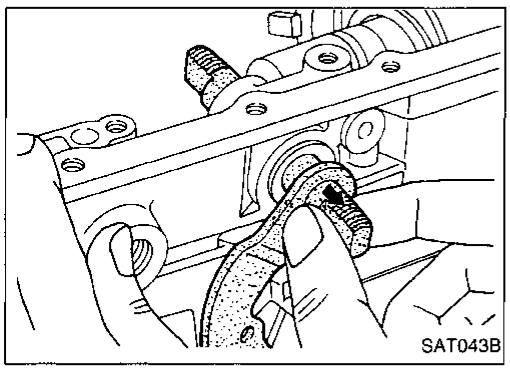

d. Remove manual shaft from transmission case.

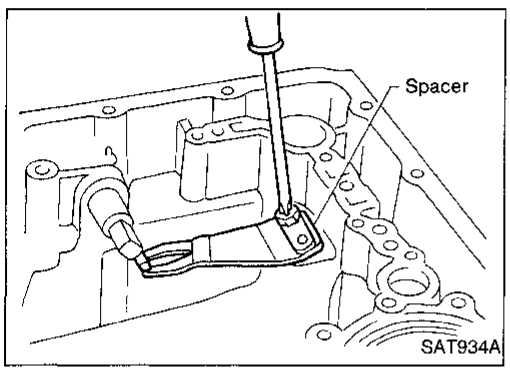

e. Remove spacer and detent spring from transmission case.

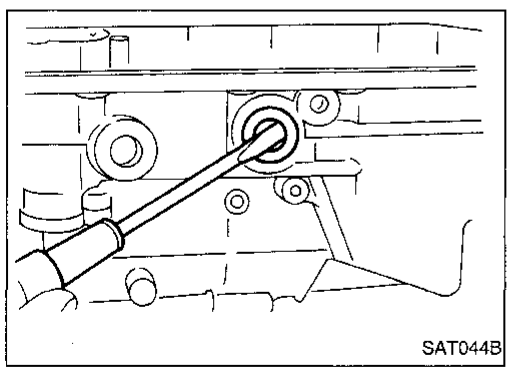

f. Remove oil seal from transmission case.

Oil Pump

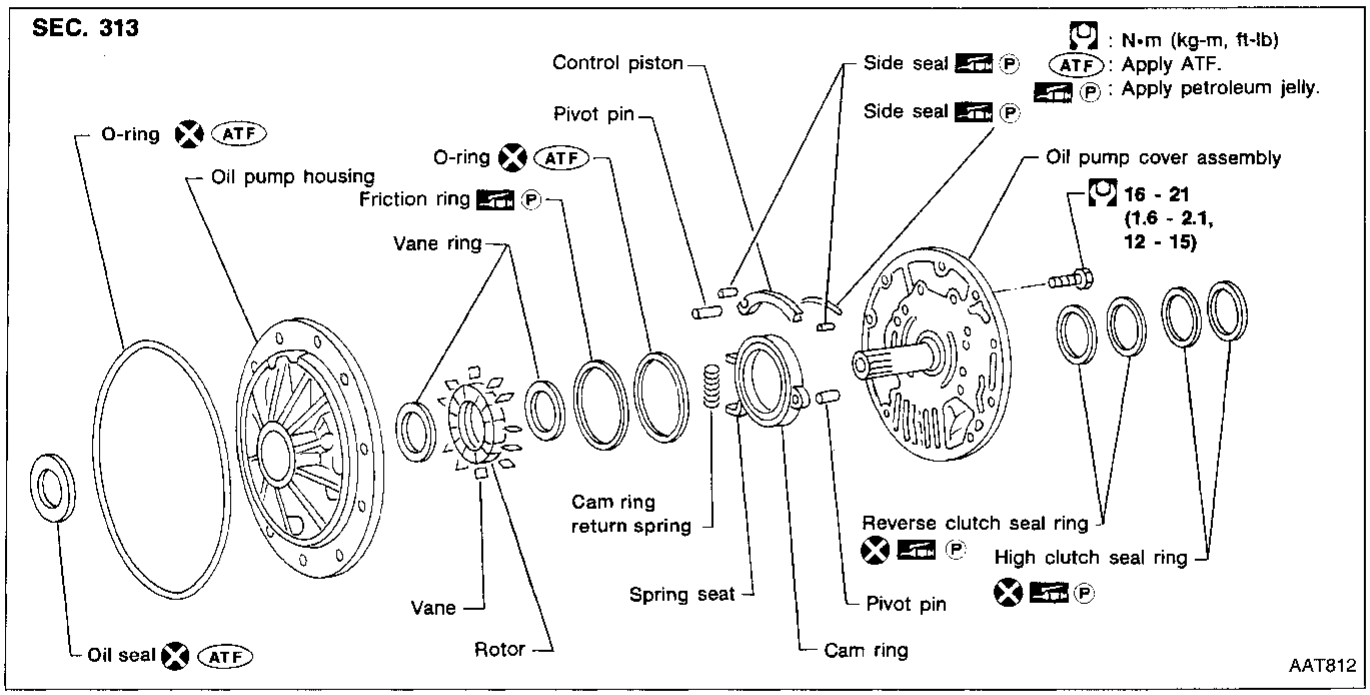

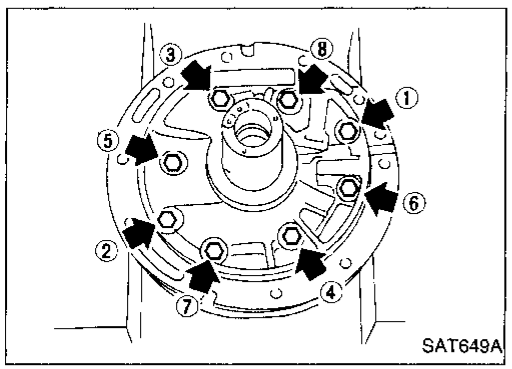

DISASSEMBLY

1. Loosen bolts in numerical order and remove oil pump cover.

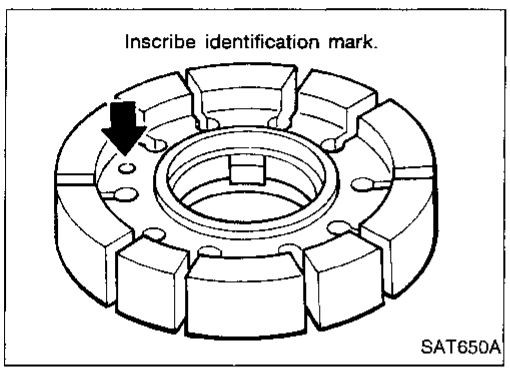

2. Remove rotor, vane rings and vanes.
- **Inscribe a mark on back of rotor for identification of fore-aft direction when reassembling rotor. Then remove rotor.**

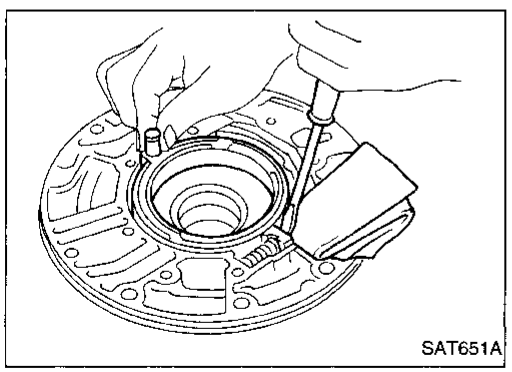

3. While pushing on cam ring remove pivot pin.
- **Be careful not to scratch oil pump housing.**

Oil Pump (Cont'd)

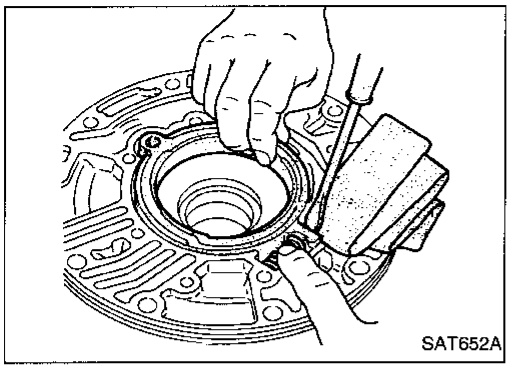
SAT652A

4. While holding cam ring and cam ring return spring, lift out cam ring return spring.
- **Be careful not to damage oil pump housing.**
- **Hold cam ring return spring to prevent it from jumping.**

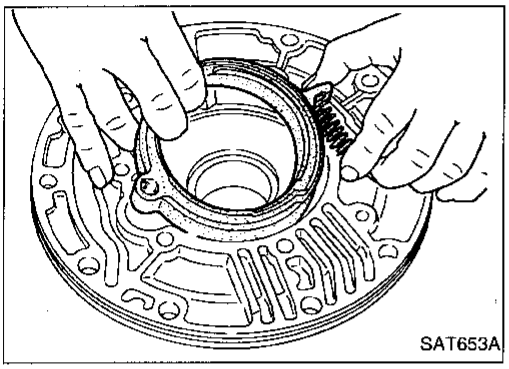
SAT653A

5. Remove cam ring and cam ring return spring from oil pump housing.

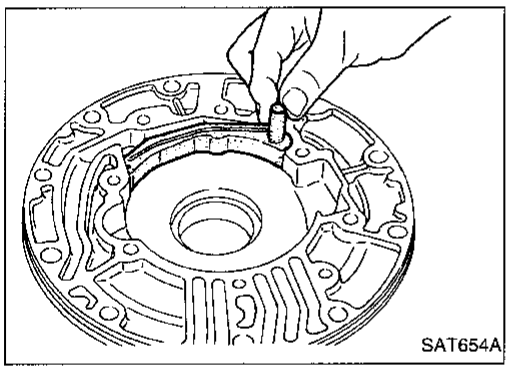
SAT654A

6. Remove pivot pin from control piston and remove control piston assembly.

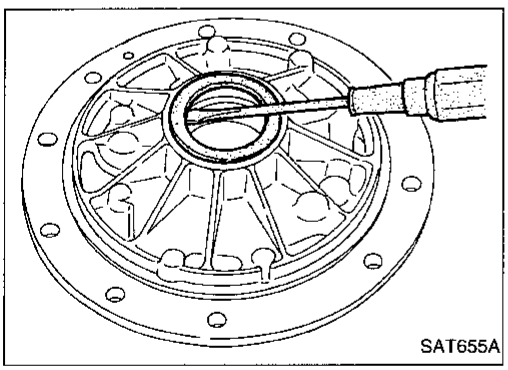
SAT655A

7. Remove oil seal from oil pump housing.
- **Be careful not to scratch oil pump housing.**

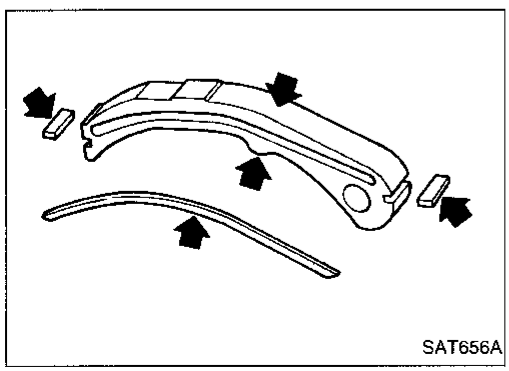
SAT656A

INSPECTION

Oil pump cover, rotor, vanes, control piston, side seals, cam ring and friction ring

- Check for wear or damage.

Oil Pump (Cont'd)

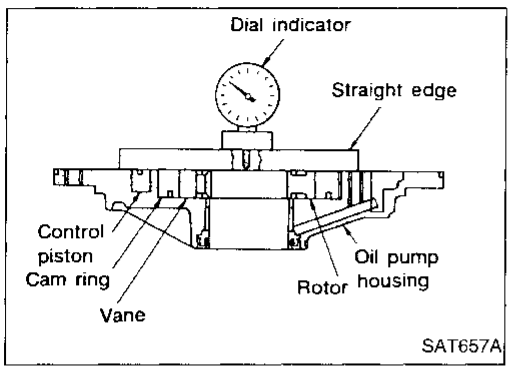

Side clearances

- Measure side clearances between end of oil pump housing and cam ring, rotor, vanes and control piston in at least four places along their circumferences. Maximum measured values should be within specified ranges.
- **Before measuring side clearance, check that friction rings, O-ring, control piston side seals and cam ring return spring are removed.**
  Standard clearance (Cam ring, rotor, vanes and control piston):
  Refer to SDS, AT-116.
- If not within standard clearance, replace oil pump assembly except oil pump cover assembly.

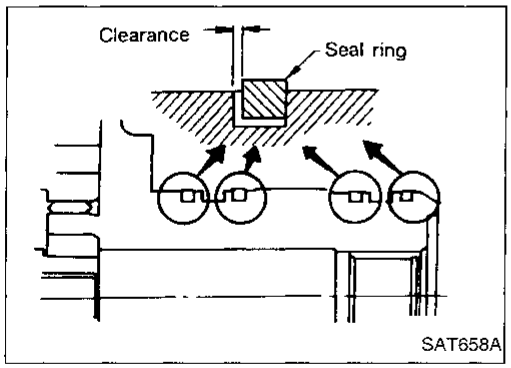

Seal ring clearance

- Measure clearance between seal ring and ring groove.
  Standard clearance:
  0.10 - 0.25 mm (0.0039 - 0.0098 in)
  Wear limit:
  0.25 mm (0.0098 in)
- If not within wear limit, replace oil pump cover assembly.

ASSEMBLY

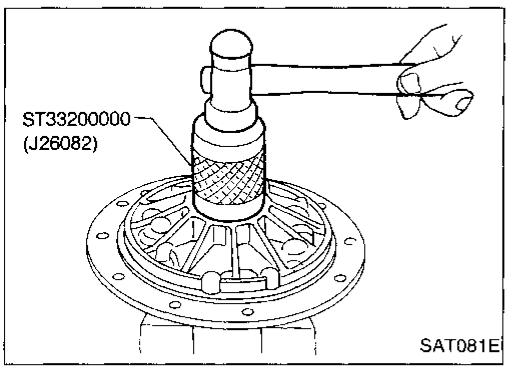

1. Drive oil seal into oil pump housing.
- **Apply ATF to outer periphery and lip surface.**

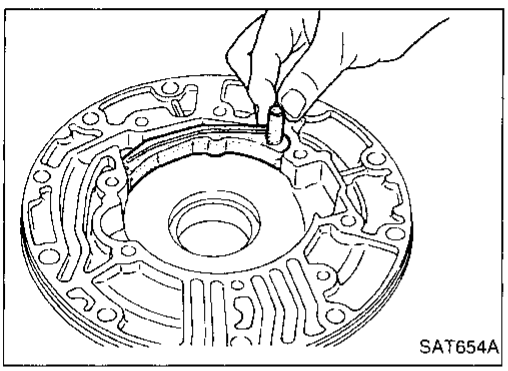

2. Install cam ring in oil pump housing by the following steps.

a. Install side seal on control piston.
- **Pay attention to its direction — Black surface goes toward control piston.**
- **Apply petroleum jelly to side seal.**

b. Install control piston on oil pump.

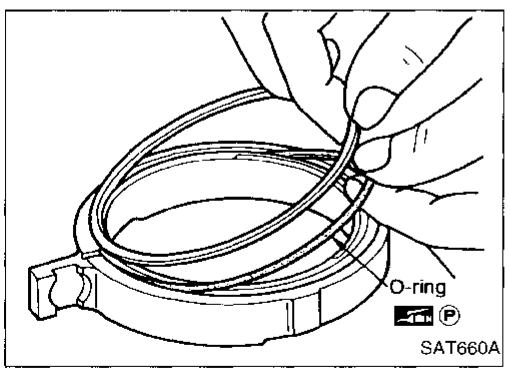

c. Install O-ring and friction ring on cam ring.
- **Apply petroleum jelly to O-ring.**

Oil Pump (Cont'd)

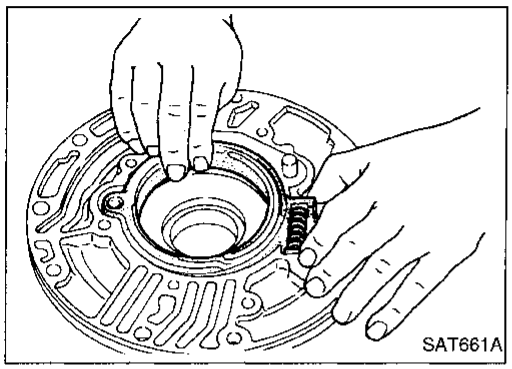

d. Assemble cam ring, cam ring return spring and spring seat. Install spring by pushing it against pump housing.

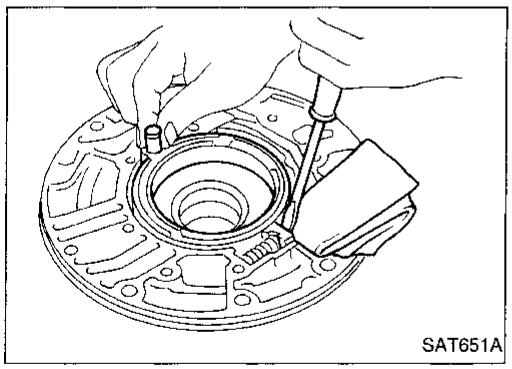

e. While pushing on cam ring install pivot pin.

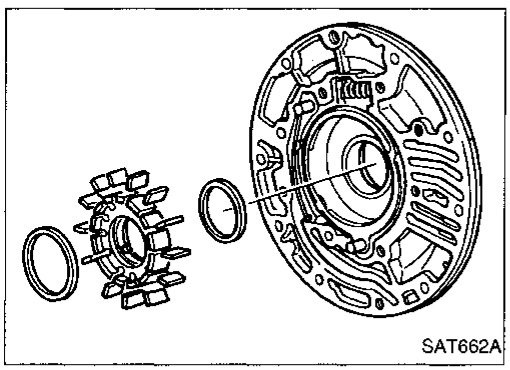

3. Install rotor, vanes and vane rings.
- **Pay attention to direction of rotor.**

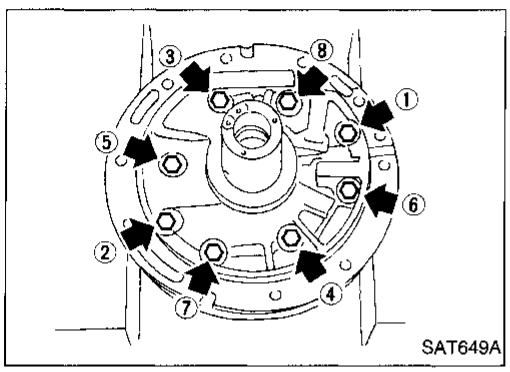

4. Install oil pump housing and oil pump cover.
a. Wrap masking tape around splines of oil pump cover assembly to protect seal. Position oil pump cover assembly in oil pump housing assembly, then remove masking tape.
b. Tighten bolts in a criss-cross pattern.

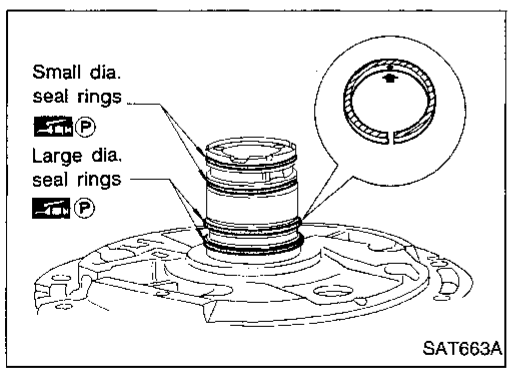

5. Install seal rings carefully after packing ring grooves with petroleum jelly. Press rings down into jelly to a close fit.
- **Seal rings come in two different diameters. Check fit carefully in each groove.**
  Small dia. seal ring:
  No mark
  Large dia. seal ring:
  Yellow mark in area shown by arrow
- **Do not spread gap of seal ring excessively while installing. It may deform ring.**

Control Valve Assembly

SEC. 317

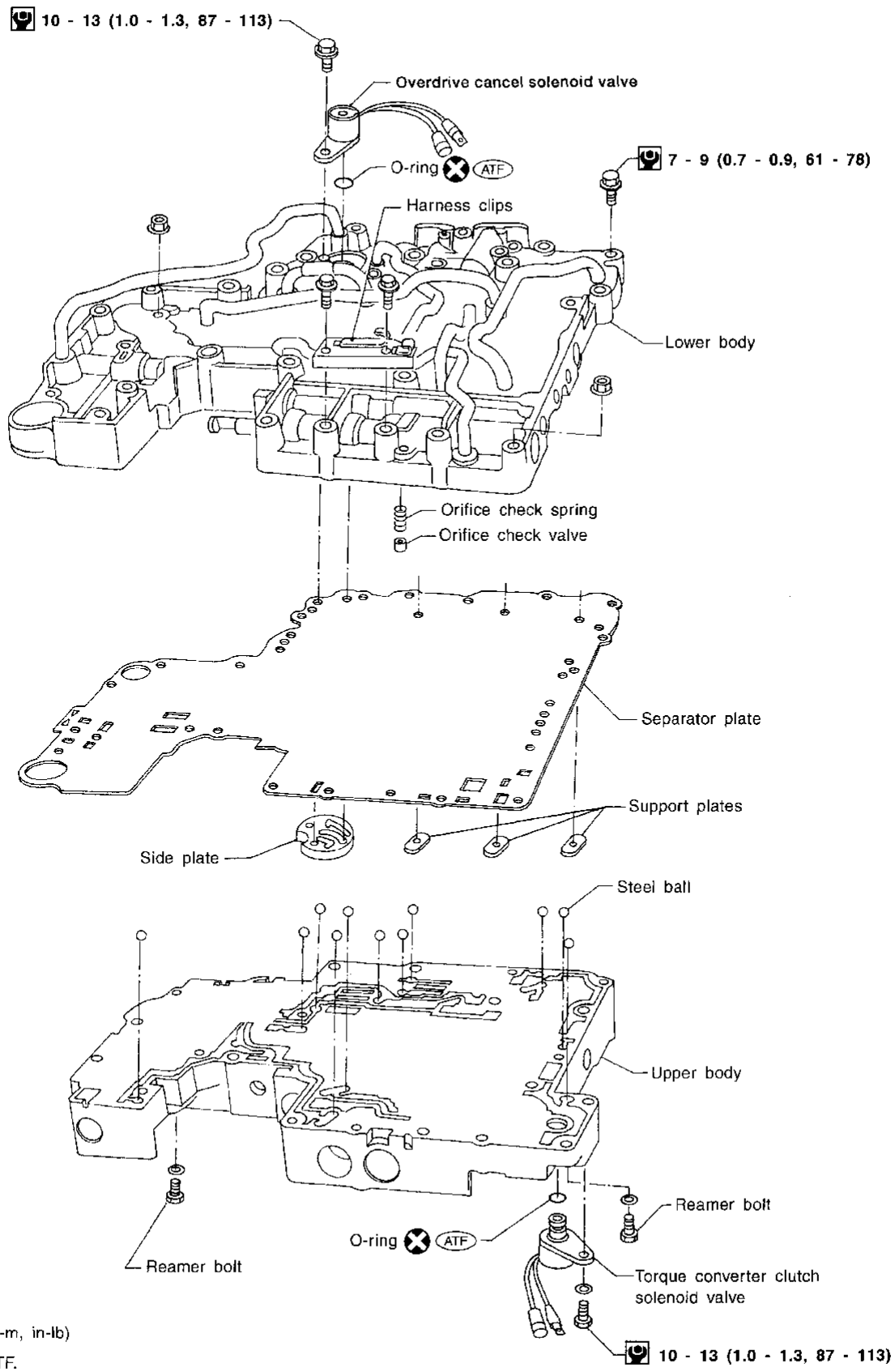

: N•m (kg-m, in-lb)

ATF : Apply ATF.

AAT813

Control Valve Assembly (Cont'd)

DISASSEMBLY

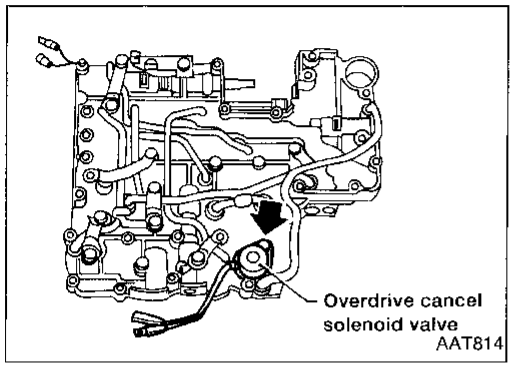

1. Remove solenoids.
a. Remove overdrive cancel solenoid valve and side plate from lower body.
b. Remove O-ring from solenoid.

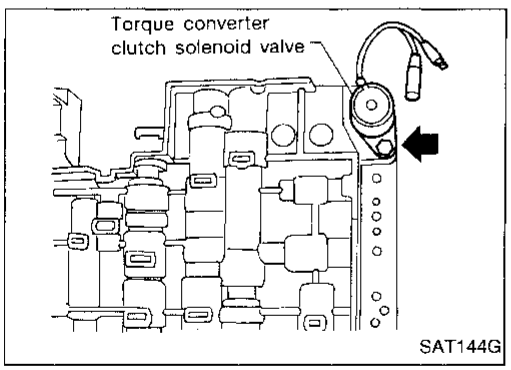

c. Remove torque converter clutch solenoid valve from upper body.
d. Remove O-ring from solenoid valve.

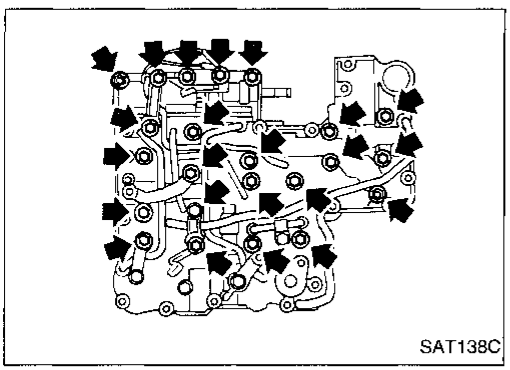

2. Disassemble upper and lower bodies.
a. Place upper body facedown, and remove bolts, reamer bolts and support plates.
b. Remove lower body, separator plate and separate gasket as a unit from upper body.

- **Be careful not to drop orifice check valve, spring and steel balls.**

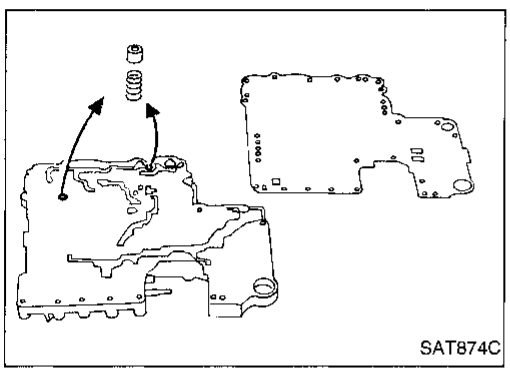

c. Place lower body facedown, and remove separator plate.
d. Remove orifice check valve and orifice check spring.

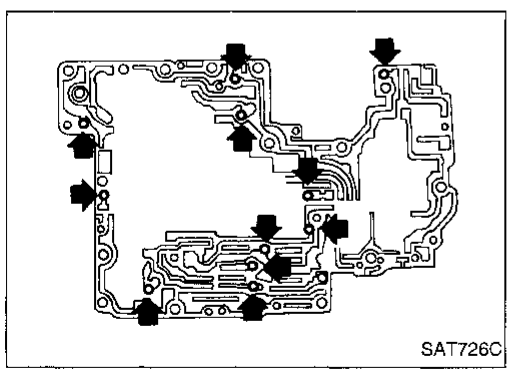

e. Check to see that steel balls are properly positioned in upper body and then remove them from upper body.

Control Valve Assembly (Cont'd)

INSPECTION

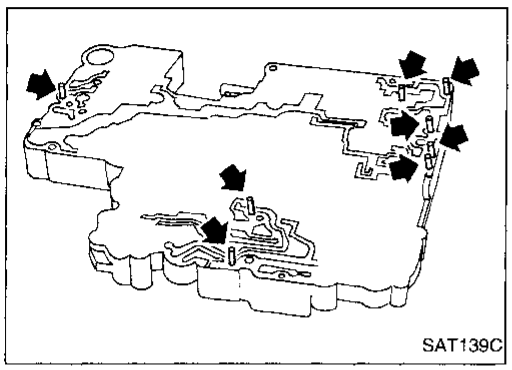
SAT139C

Lower and upper bodies

- Check to see that there are pins and retainer plates in lower body.

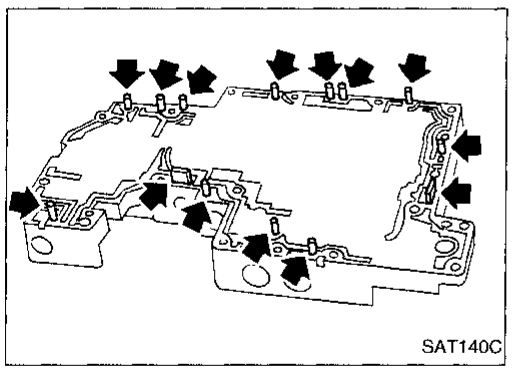
SAT140C

- Check to see that there are pins and retainer plates in upper body.
- **Be careful not to lose these parts.**

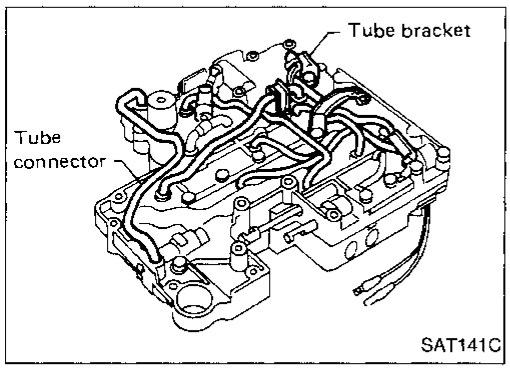

SAT141C

- Check to make sure that oil circuits are clean and free from damage.
- Check tube brackets and tube connectors for damage.

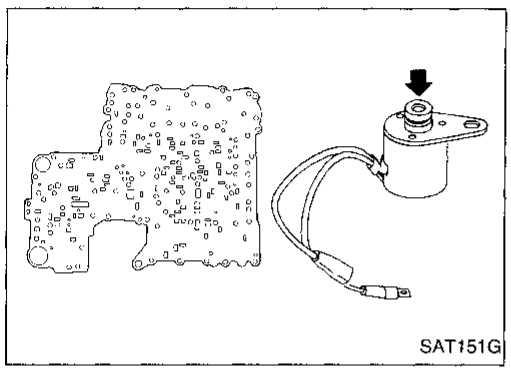
SAT151G

Separator plates

- Check to make sure that separator plate is free of damage and not deformed and oil holes are clean.

Overdrive cancel solenoid valve and torque converter clutch solenoid valve

- Check that filter is not clogged or damaged.
- Measure resistance. Refer to "Component Inspection", AT-22.

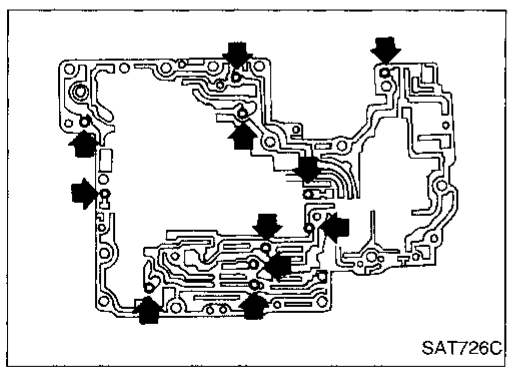
SAT726C

ASSEMBLY

1. Install upper and lower bodies.

a. Place oil circuit of upper body face up. Install steel balls in their proper positions.

Control Valve Assembly (Cont'd)

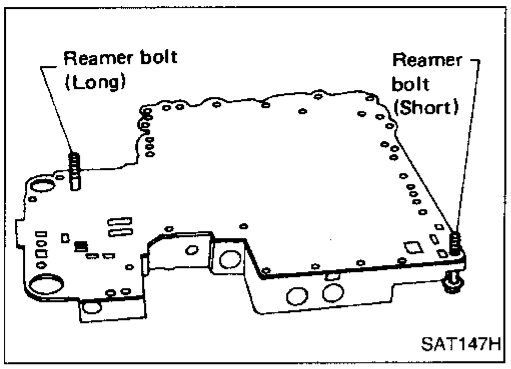

b. Install reamer bolts from bottom of upper body and install separate gaskets.

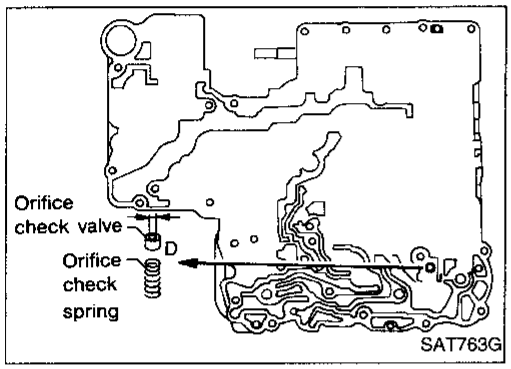

c. Place oil circuit of lower body face up. Install orifice check spring, orifice check valve.
   D: mm (in)
   2.0 (0.079)

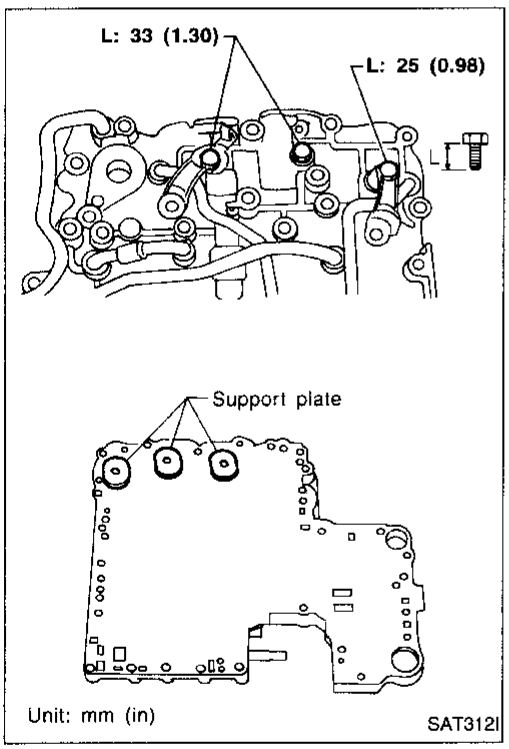

d. Install separator plate on lower body.
e. Install and temporarily tighten support plates and tube brackets.

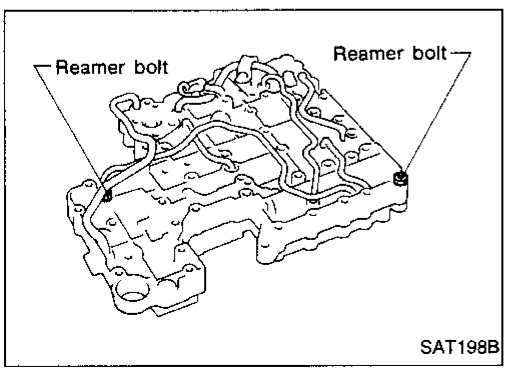

f. Temporarily assemble lower and upper bodies, using reamer bolt as a guide.

- **Be careful not to dislocate or drop steel balls, orifice check spring and orifice check valve.**

Control Valve Assembly (Cont'd)

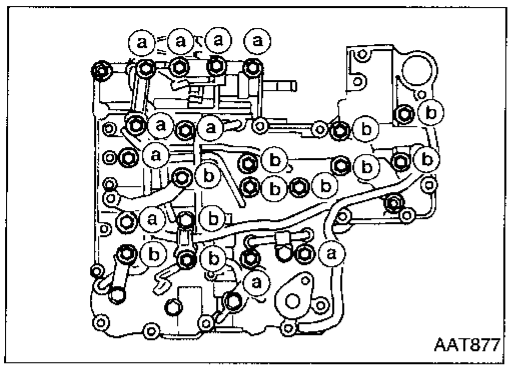

g. Install and temporarily tighten bolts and tube brackets in their proper locations.

Bolt length and location:

		Bolt symbol	
		ⓐ	ⓑ
Bolt length	mm (in)	45 (1.77)	33 (1.30)

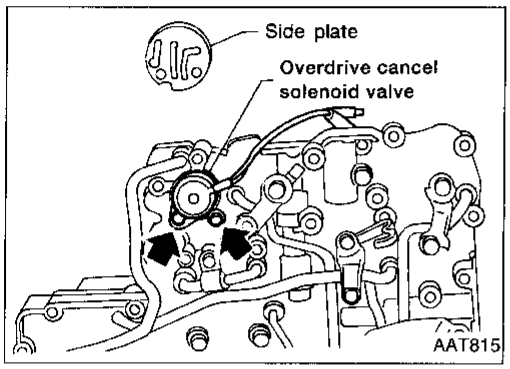

2. Install solenoids.
a. Attach O-ring and install overdrive cancel solenoid valve and side plate onto lower body.

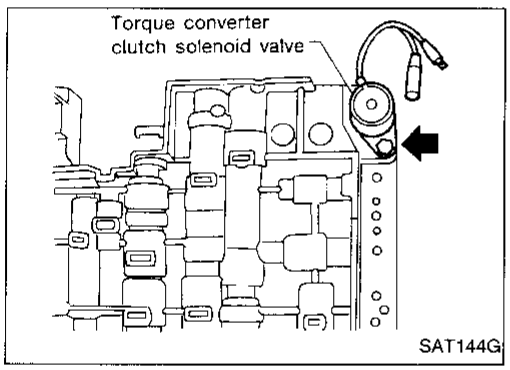

b. Attach O-ring and install torque converter clutch solenoid valve onto upper body.
3. Tighten bolt.

Control Valve Upper Body

SEC. 317

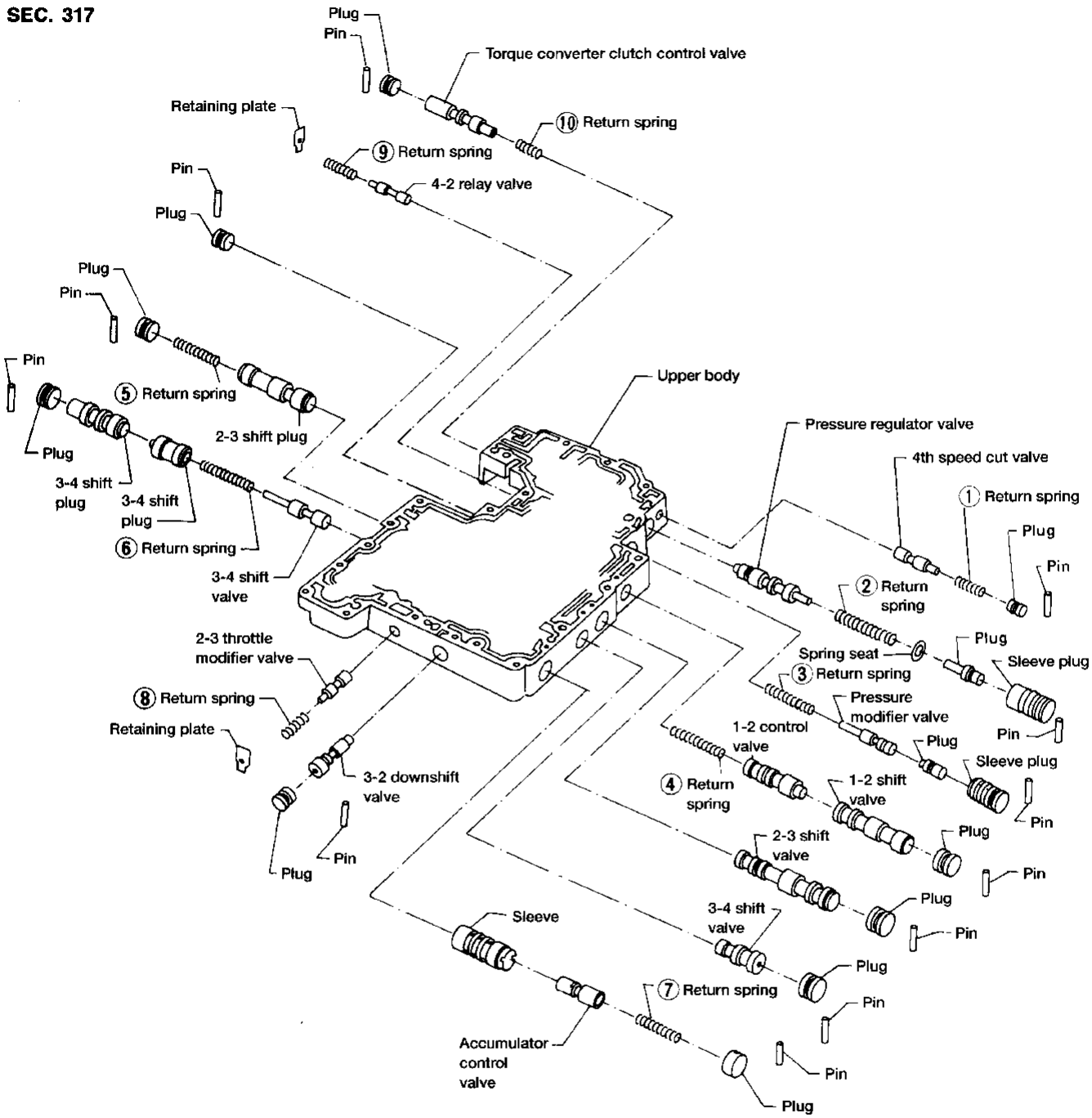

Apply ATF to all components before their installation.

AAT040A

Numbers preceding valve springs correspond with those shown in Return Springs Chart on SDS. AT-114.

Control Valve Upper Body (Cont'd)

DISASSEMBLY

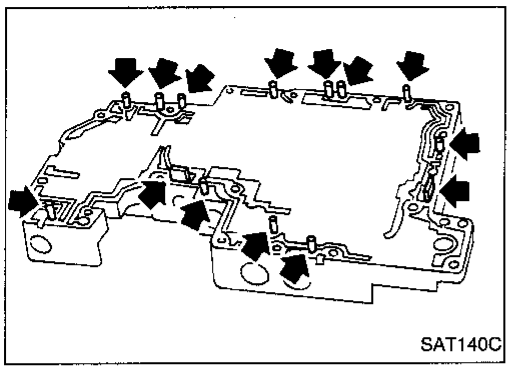
SAT140C

1. Remove valves at parallel pins.
- **Do not use a magnetic hand.**

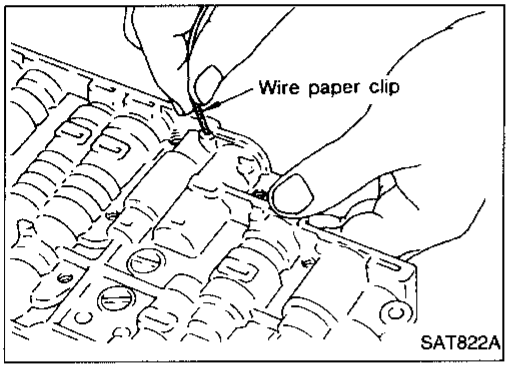

SAT822A

a. Use a wire paper clip to push out parallel pins.

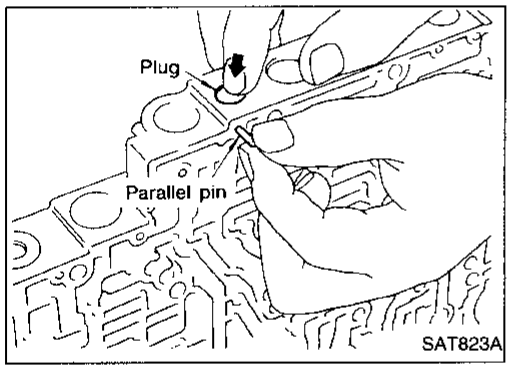

SAT823A

b. Remove parallel pins while pressing their corresponding plugs and sleeves.
- **Remove plug slowly to prevent internal parts from jumping out.**

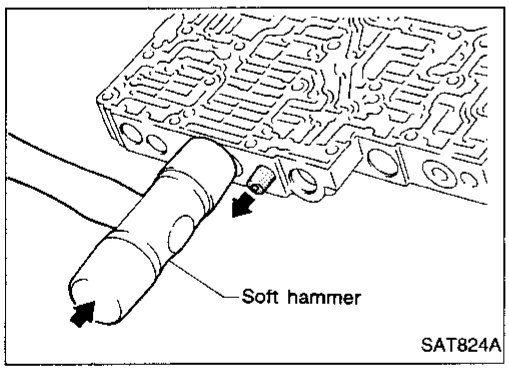

SAT824A

c. Place mating surface of valve facedown, and remove internal parts.
- **If a valve is hard to remove, place valve body facedown and lightly tap it with a soft hammer.**
- **Be careful not to drop or damage valves and sleeves.**

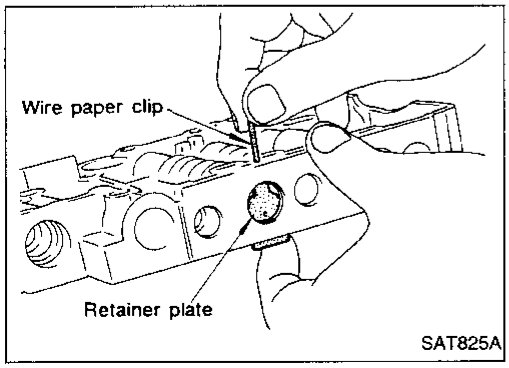

SAT825A

2. Remove valves at retainer plates.
a. Pry out retainer plate with wire paper clip.

Control Valve Upper Body (Cont'd)

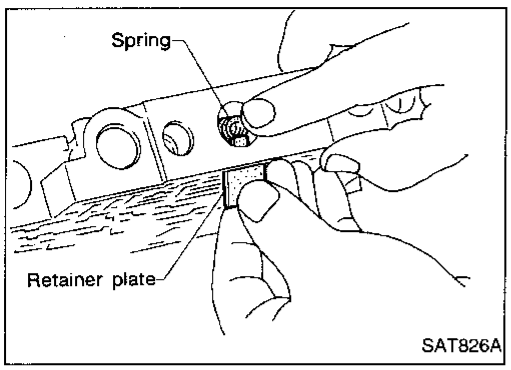

b. Remove retainer plates while holding spring.

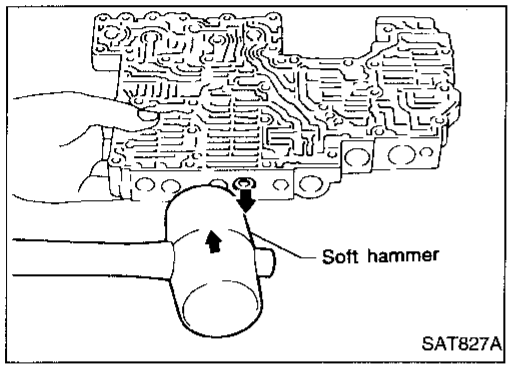

c. Place mating surface of valve facedown, and remove internal parts.

- **If a valve is hard to remove, lightly tap valve body with a soft hammer.**
- **Be careful not to drop or damage valves, sleeves, etc.**

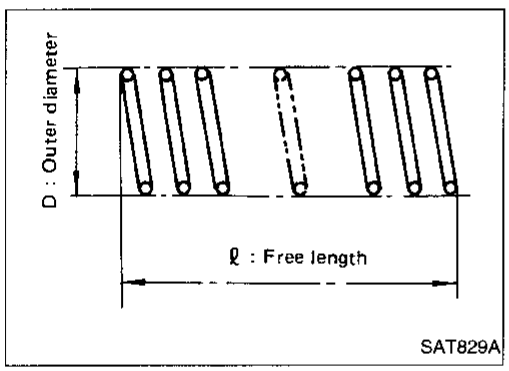

INSPECTION

Valve springs

- Measure free length and outer diameter of each valve spring. Also check for damage or deformation.
  Inspection standard:
  Refer to SDS, AT-114.
- Replace valve springs if deformed or fatigued.

Control valves

- Check sliding surfaces of valves, sleeves and plugs.

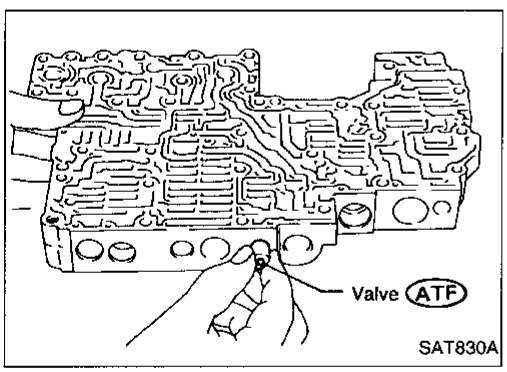

ASSEMBLY

1. Lubricate the control valve body and all valves with ATF Install control valves by sliding them carefully into their bores.

- **Be careful not to scratch or damage valve body.**

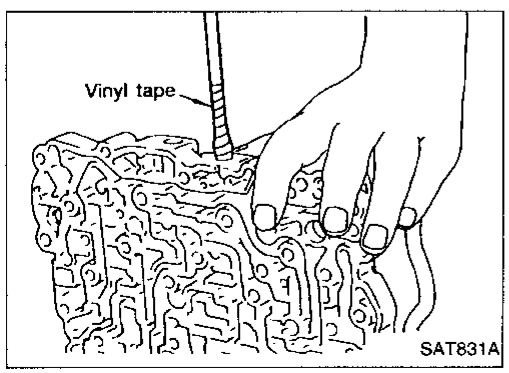

- Wrap a small screwdriver with vinyl tape and use it to insert the valves into proper position.

Control Valve Upper Body (Cont'd)

Accumulator control plug

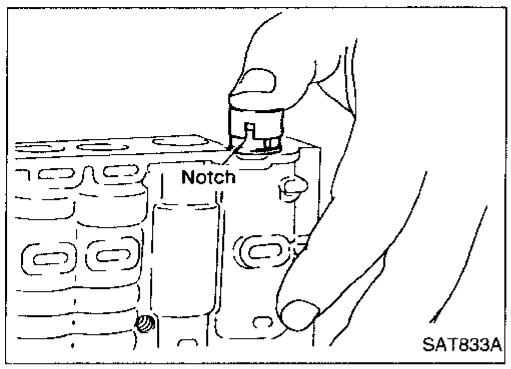

- Align protrusion of accumulator control sleeve with notch in plug.
- Align parallel pin groove in plug with parallel pin, and install accumulator control valve.

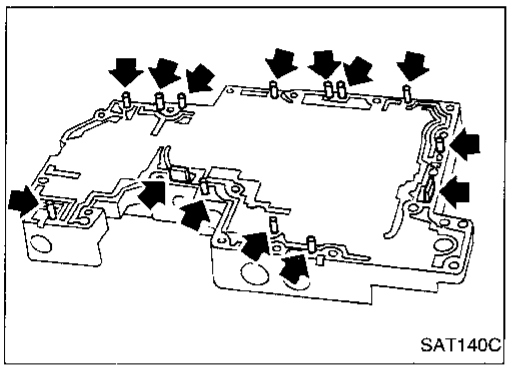

2. Install parallel pins and retainer plates.

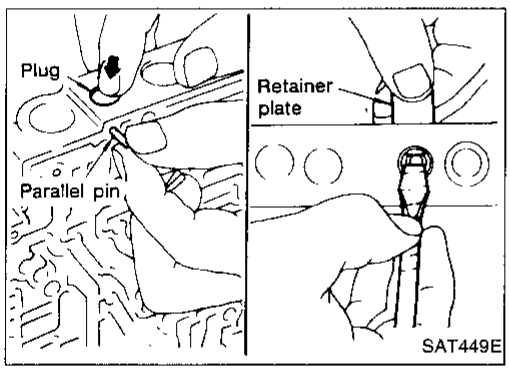

- While pushing plug, install parallel pin.
- Insert retainer plate while pushing spring.

Control Valve Lower Body

SEC. 317

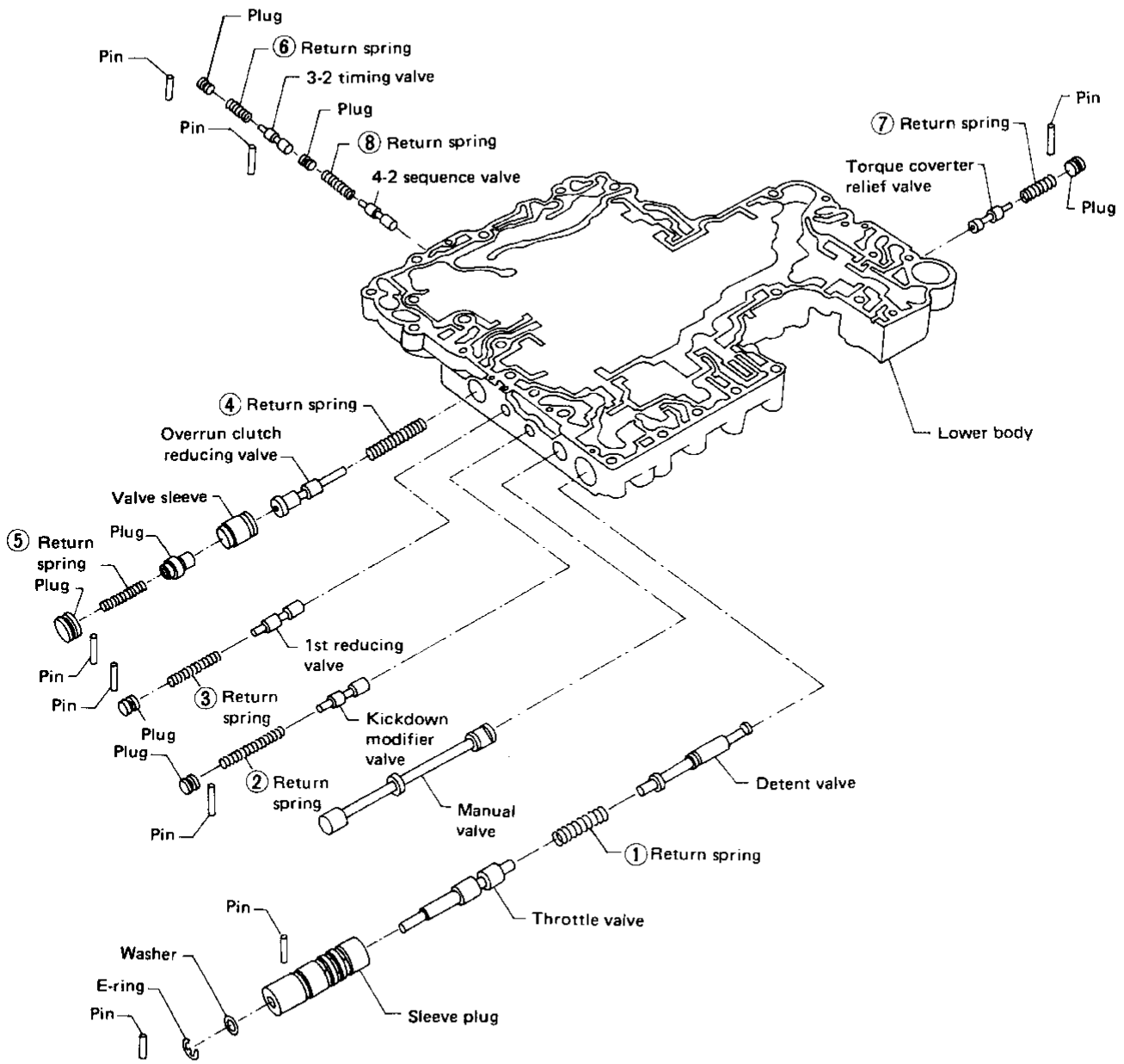

Apply ATF to all components before their installation.

SAT752GA

Numbers preceding valve springs correspond with those shown in Return Springs Chart on SDS. AT-114.

Control Valve Lower Body (Cont'd)

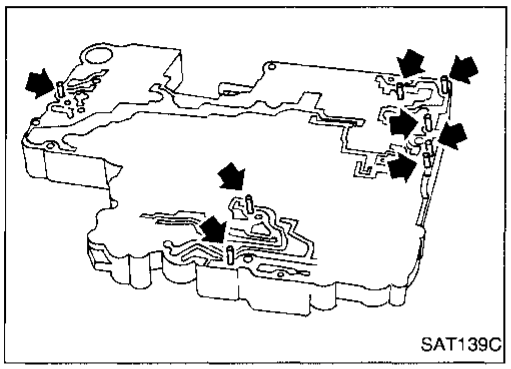

DISASSEMBLY

1. Remove valves at parallel pins.
2. Remove valves at retainer plates.
   For removal procedures, refer to "DISASSEMBLY", "Control Valve Upper Body," AT-67.

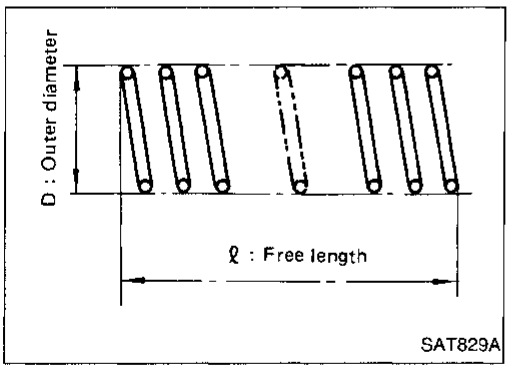

INSPECTION

Valve springs

- Check each valve spring for damage or deformation. Also measure free length and outer diameter.
  Inspection standard:
  Refer to SDS, AT-114.
- Replace valve springs if deformed or fatigued.

Control valves

- Check sliding surfaces of control valves, sleeves and plugs for damage.

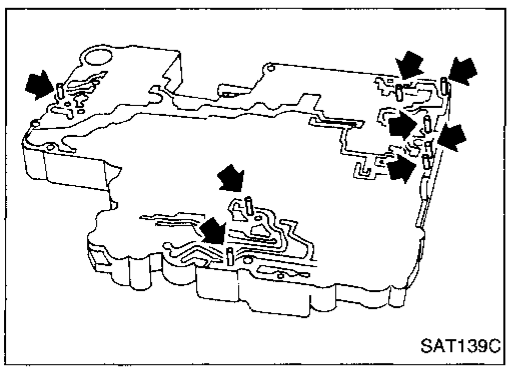

ASSEMBLY

- Install control valves.
  For installation procedures, refer to "ASSEMBLY", "Control Valve Upper Body," AT-68.

Governor Valve Assembly

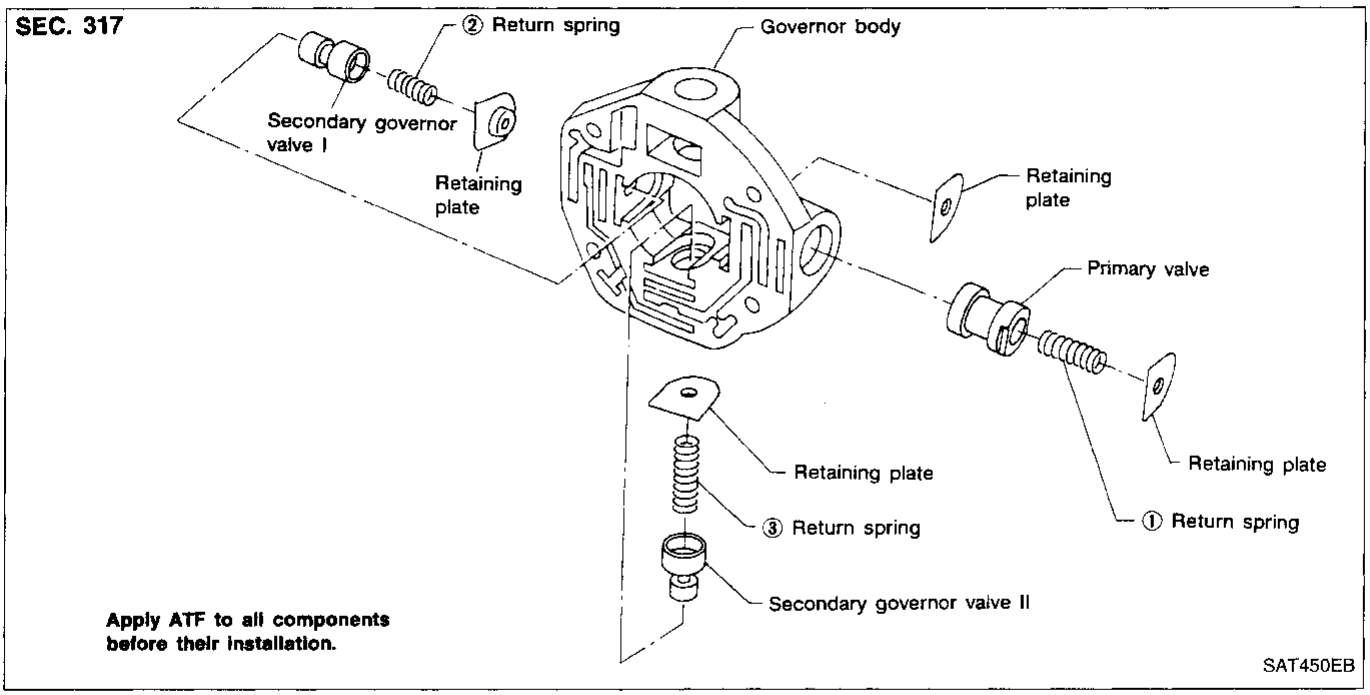

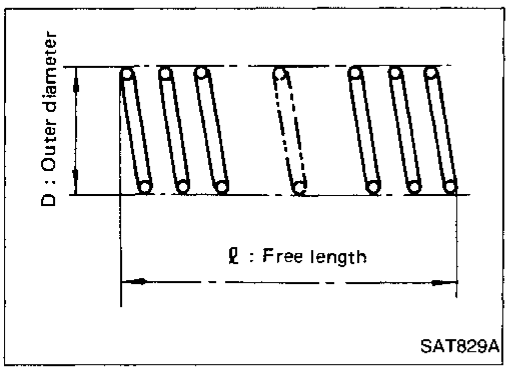

INSPECTION

Valve springs

- Measure free length and outer diameter of each valve spring. Also check for damage or deformation.
  Inspection standard:
  Refer to SDS, AT-114.

Governor valves and valve body

- Check governor valves and valve body for indication of burning or scratches.

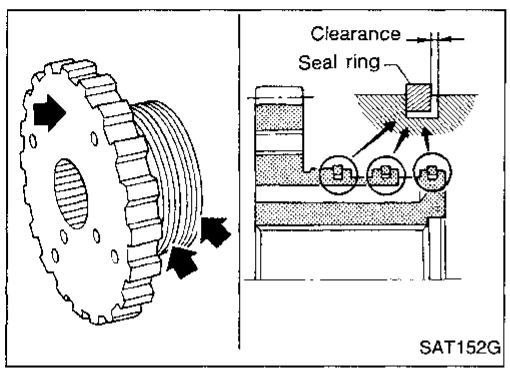

Parking Gear

INSPECTION

- Check contacting surface of parking gear and ring groove areas for wear.
- Measure clearance between seal ring and ring groove.
  Standard clearance:
  0.15 - 0.40 mm (0.0059 - 0.0157 in)
  Wear limit:
  0.40 mm (0.0157 in)

Reverse Clutch

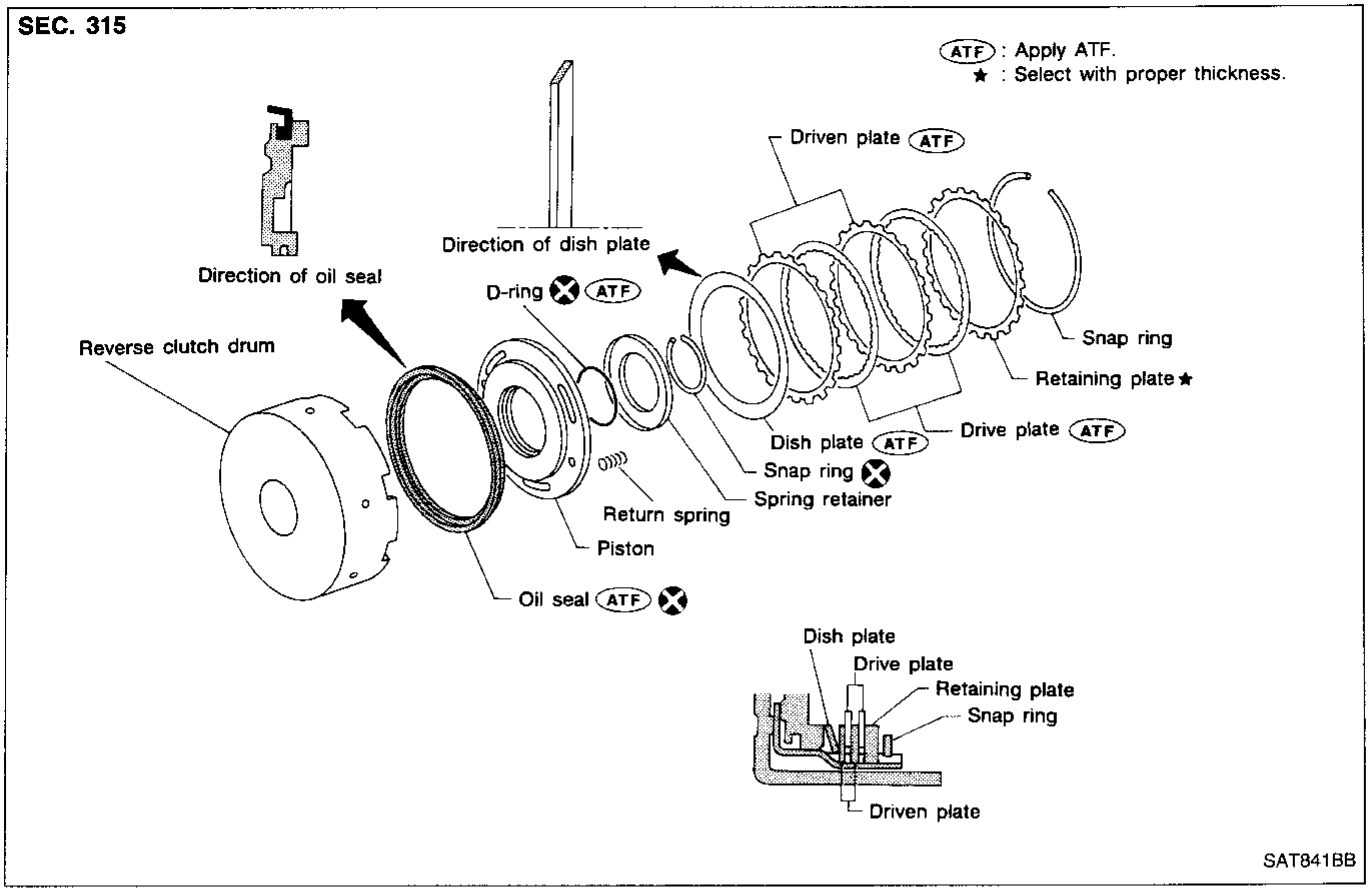

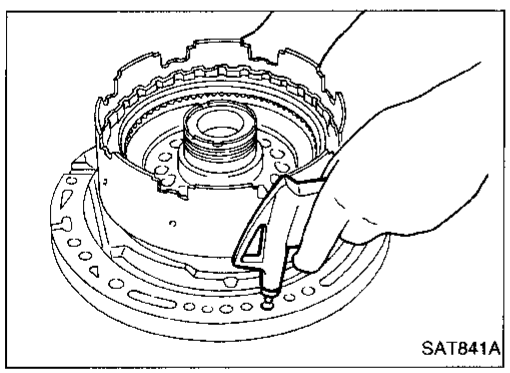

DISASSEMBLY

1. Check operation of reverse clutch.

a. Install seal ring onto oil pump cover and install reverse clutch. Apply compressed air to oil hole.

b. Check to see that retaining plate moves to snap ring.

c. If retaining plate does not contact snap ring,

- D-ring might be damaged.
- Oil seal might be damaged.
- Fluid might be leaking past piston check ball.

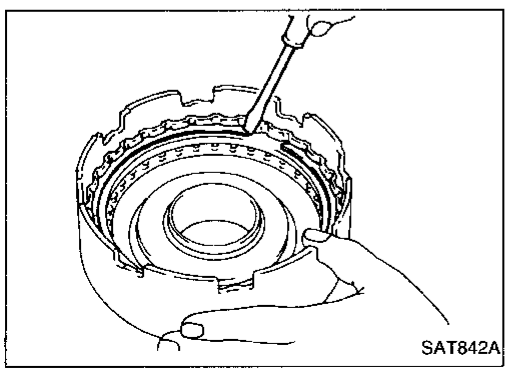

2. Remove drive plates, driven plates, retaining plate, dish plate and snap ring.

Reverse Clutch (Cont'd)

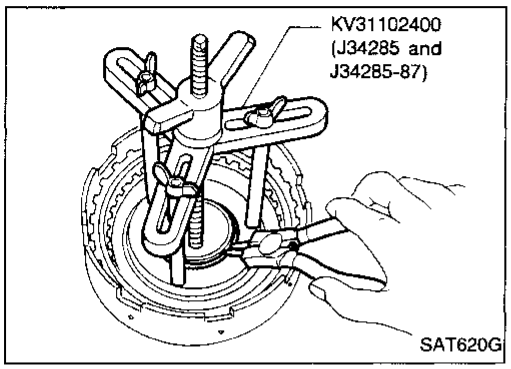

3. Remove snap ring from clutch drum while compressing clutch springs.
- **Do not expand snap ring excessively.**
4. Remove spring retainer and return spring.

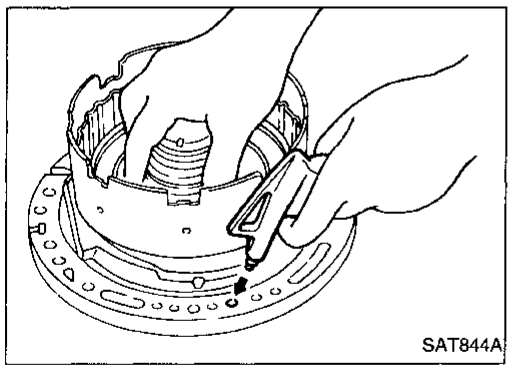

5. Install seal ring onto oil pump cover and install reverse clutch drum. While holding piston, gradually apply compressed air to oil hole until piston is removed.
- **Do not apply compressed air abruptly.**
6. Remove D-ring and oil seal from piston.

INSPECTION

Reverse clutch snap ring and spring retainer

- Check for deformation, fatigue or damage.

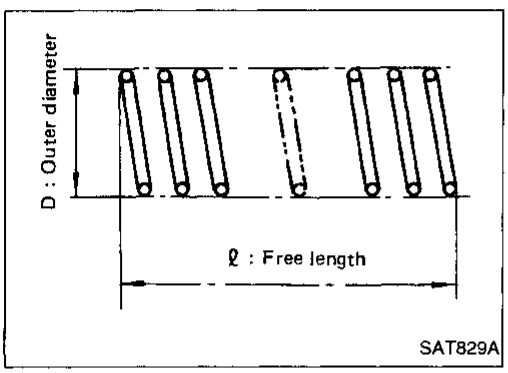

Reverse clutch return springs

- Check for deformation or damage. Also measure free length and outside diameter.
  Inspection standard:
  Refer to SDS, AT-114.

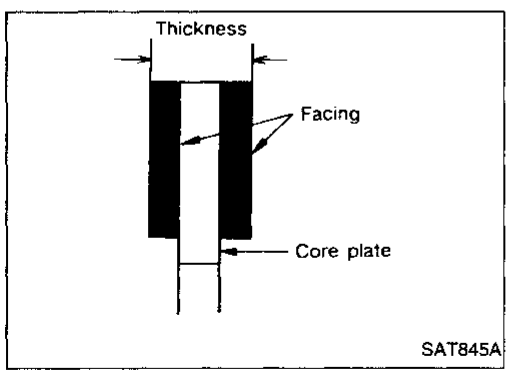

Reverse clutch drive plates

- Check facing for burns, cracks or damage.
- Measure thickness of facing.
  Thickness of drive plate:
  Standard value 1.90 - 2.05 mm (0.0748 - 0.0807 in)
  Wear limit 1.80 mm (0.0709 in)
- If not within wear limit, replace.

Reverse clutch dish plate

- Check for deformation or damage.

Reverse Clutch (Cont'd)

Reverse clutch piston

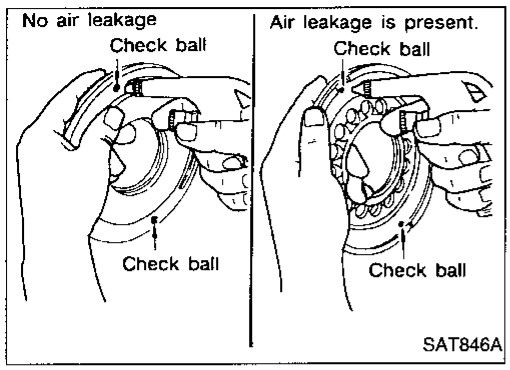

- Shake piston to assure that balls are not seized.
- Apply compressed air to check ball oil hole opposite the return spring to assure that there is no air leakage.
- Also apply compressed air to oil hole on return spring side to assure that air leaks past ball.

ASSEMBLY

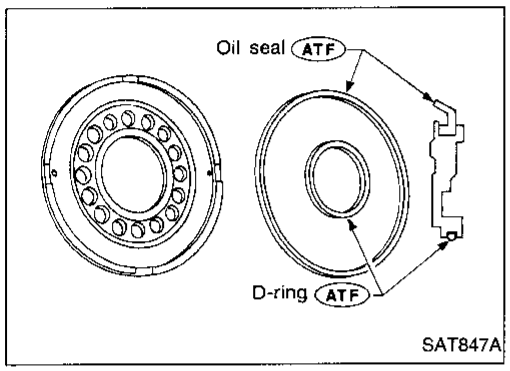

1. Install D-ring and oil seal on piston.
- **Apply ATF to both parts.**

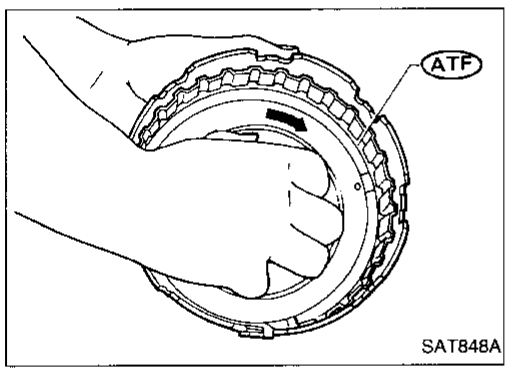

2. Install piston assembly by turning it slowly and evenly.
- **Apply ATF to inner surface of drum.**

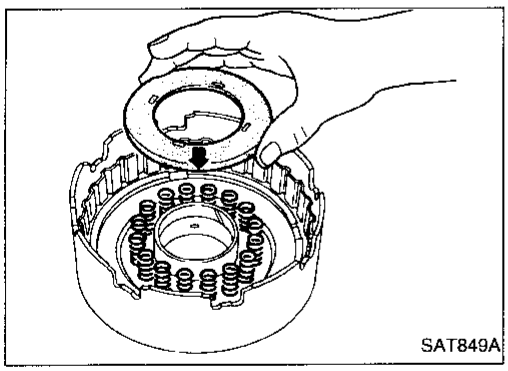

3. Install return springs and spring retainer.

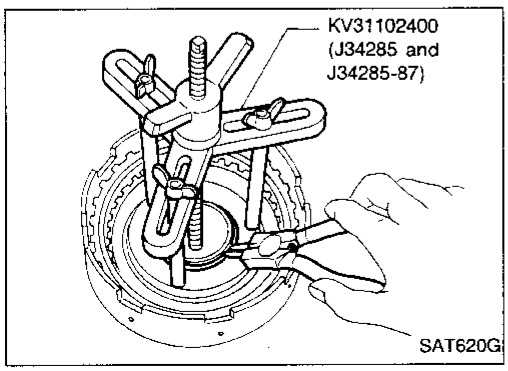

4. Install snap ring while compressing clutch springs.

Reverse Clutch (Cont'd)

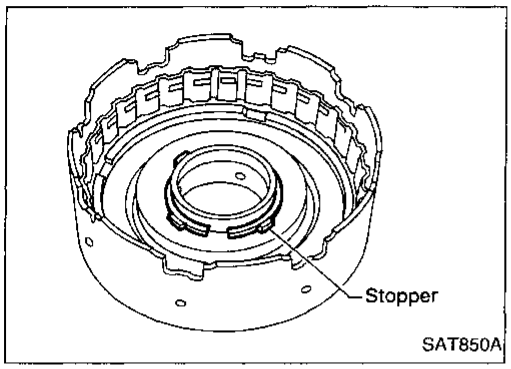

- **Do not align snap ring gap with spring retainer stopper.**

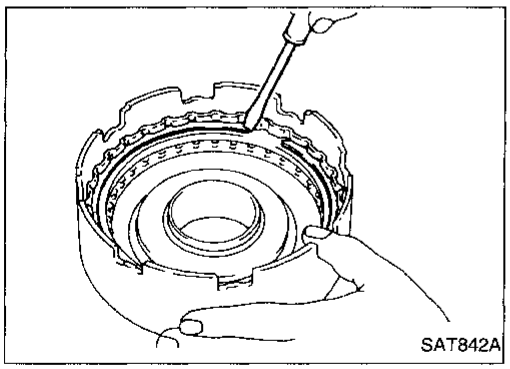

5. Install drive plates, driven plates, retaining plate and dish plate.
6. Install snap ring.

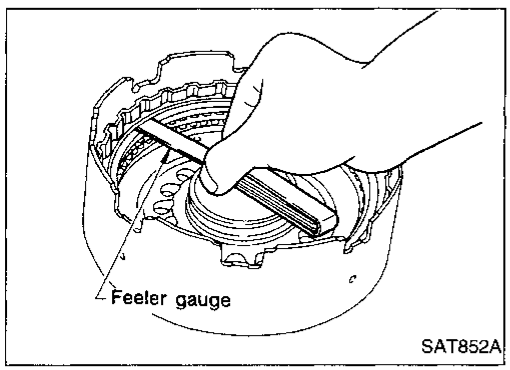

7. Measure clearance between retaining plate and snap ring. If not within allowable limit, select proper retaining plate.
   Specified clearance:
   Standard
   0.5 - 0.8 mm (0.020 - 0.031 in)
   Allowable limit
   1.2 mm (0.047 in)
   Retaining plate:
   Refer to SDS, AT-115.

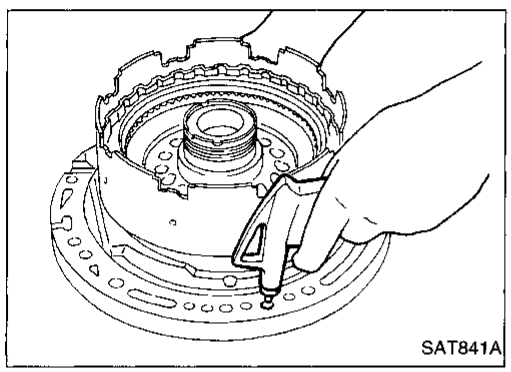

8. Check operation of reverse clutch.
   Refer to "DISASSEMBLY", "Reverse Clutch", AT-73.

High Clutch

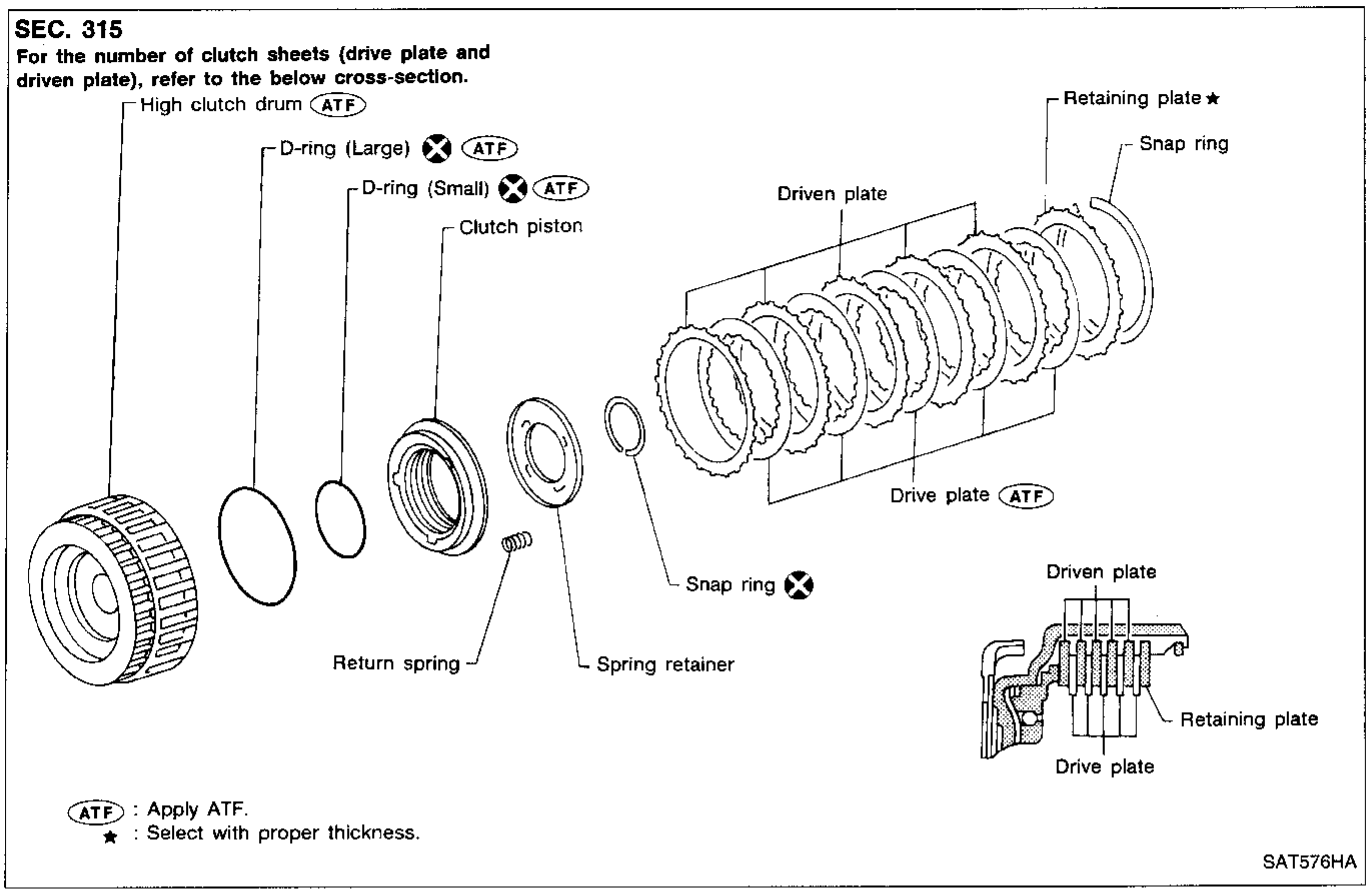

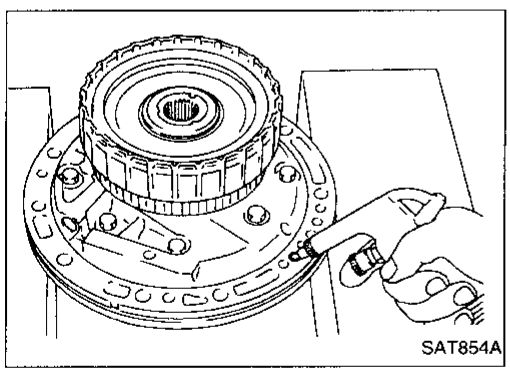

DISASSEMBLY AND ASSEMBLY

Service procedures for high clutch are essentially the same as those for reverse clutch, with the following exception:

- Check of high clutch operation

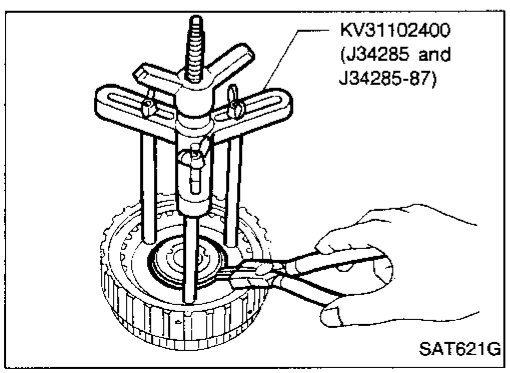

- Removal and installation of return spring

High Clutch (Cont'd)

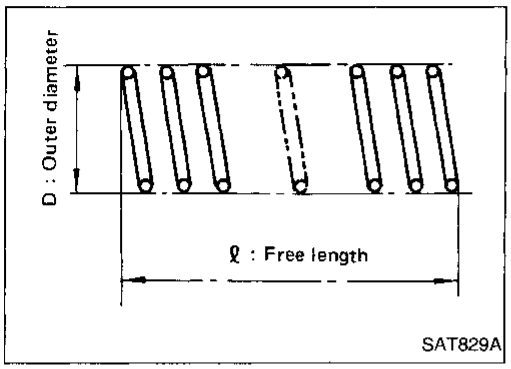

- Inspection of high clutch return springs
  Inspection standard:
  Refer to SDS, AT-114.

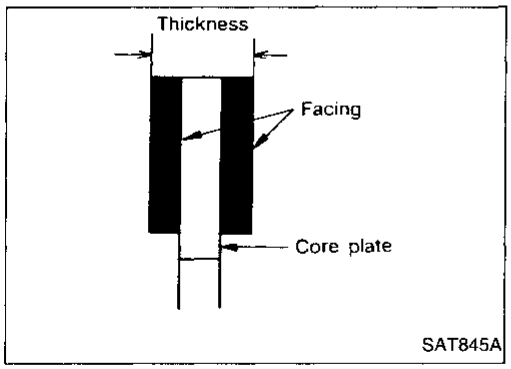

- Inspection of high clutch drive plate
  Thickness of drive plate:
  Standard
  1.52 - 1.67 mm (0.0598 - 0.0657 in)
  Wear limit
  1.40 mm (0.0551 in)

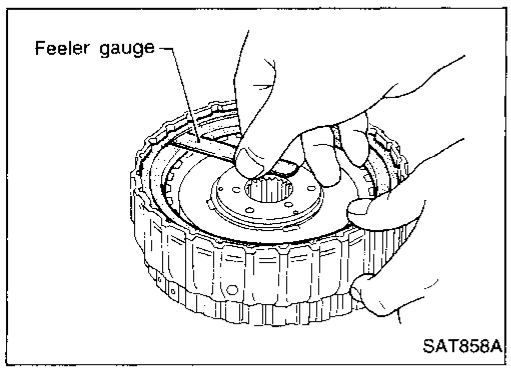

- Measurement of clearance between retaining plate and snap ring
  Specified clearance:
  Standard
  1.8 - 2.2 mm (0.071 - 0.087 in)
  Allowable limit
  2.8 mm (0.110 in)
  Retaining plate:
  Refer to SDS, AT-115.

Forward and Overrun Clutches

SEC. 315

For the number of clutch sheets (drive plate and driven plate), refer to the below cross-section.

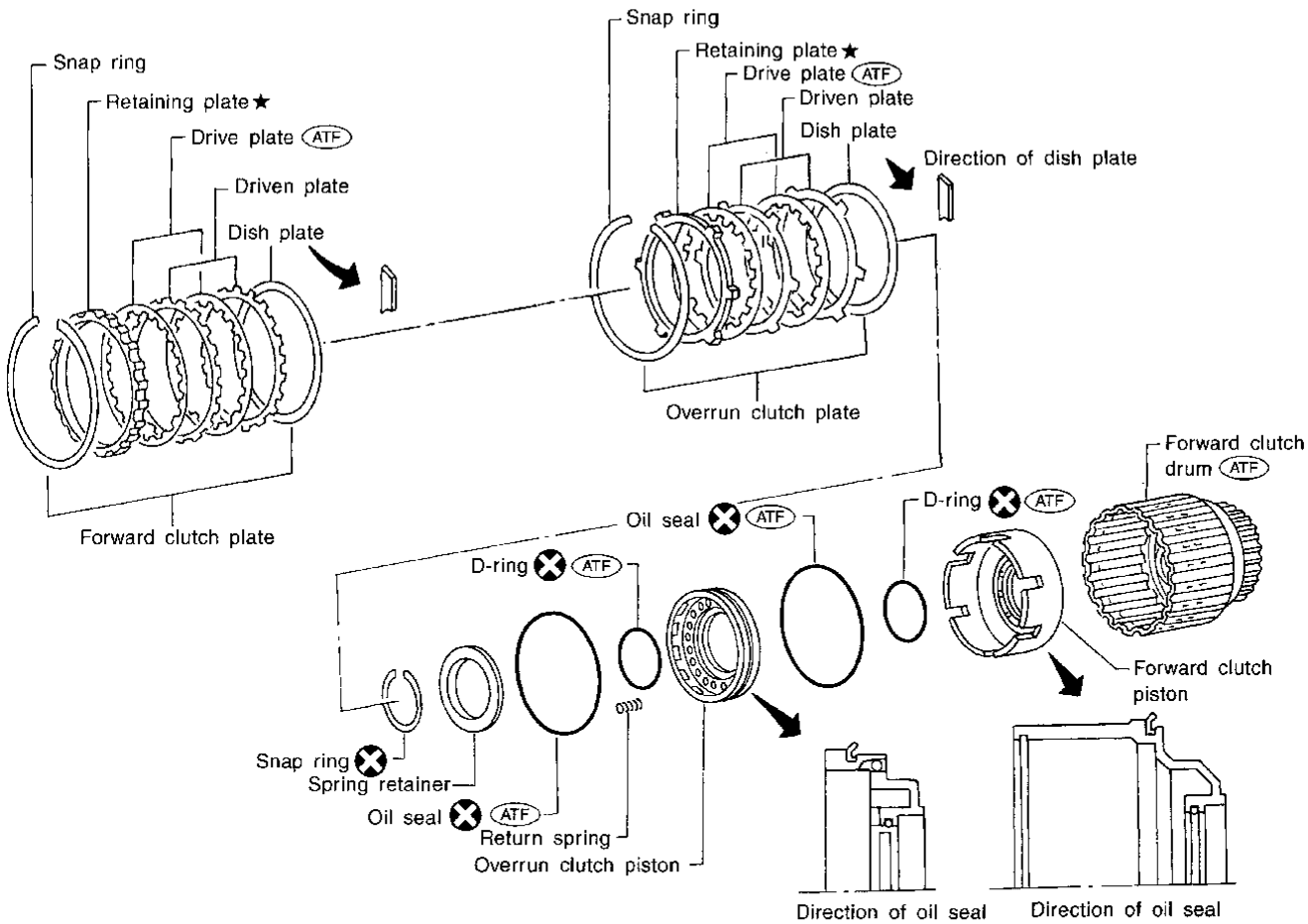

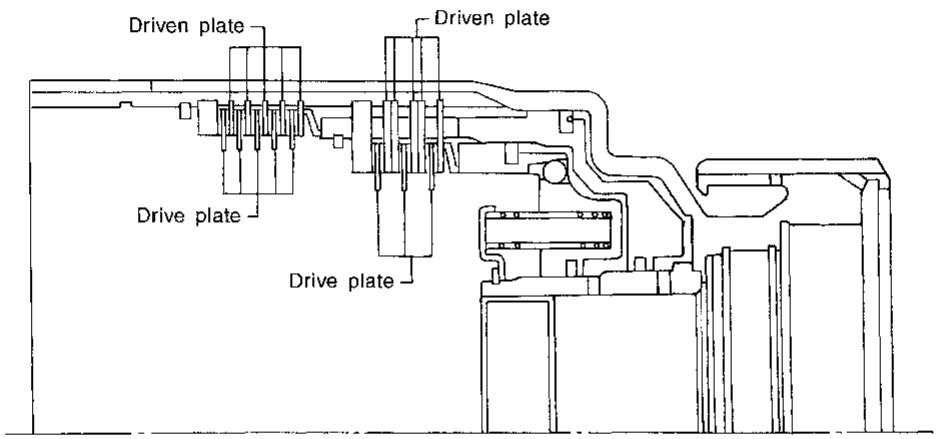

(ATF) : Apply ATF.
★ : Select with proper thickness.

SAT314I

Forward and Overrun Clutches (Cont'd)

DISASSEMBLY AND ASSEMBLY

Service procedures for forward and overrun clutches are essentially the same as those for reverse clutch, with the following exception:

- Check of forward clutch operation.

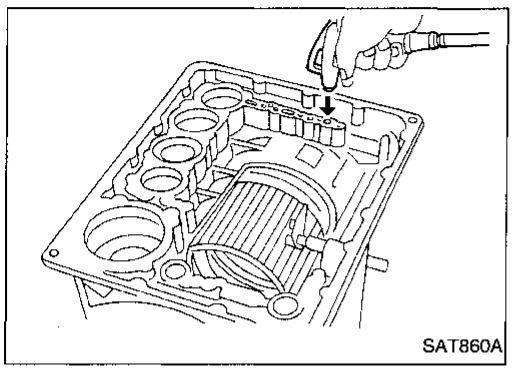

- Check of overrun clutch operation.

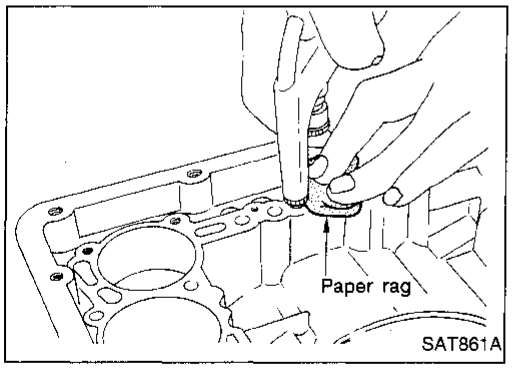

- Removal of forward clutch drum
  Remove forward clutch drum from transmission case by holding snap ring.

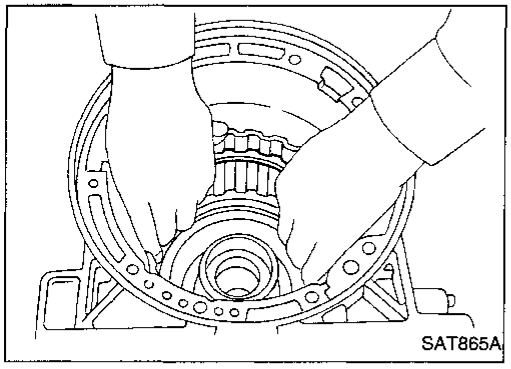

- Removal of forward clutch and overrun clutch pistons

1. While holding overrun clutch piston, gradually apply compressed air to oil hole.

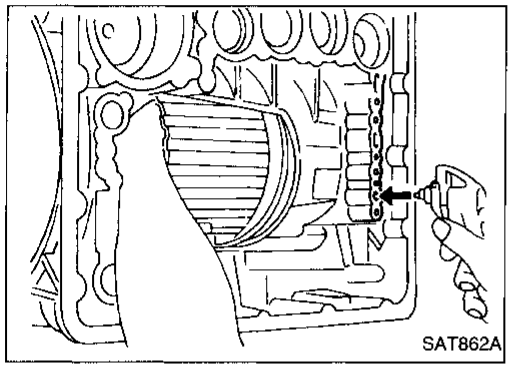

2. Remove overrun clutch from forward clutch.

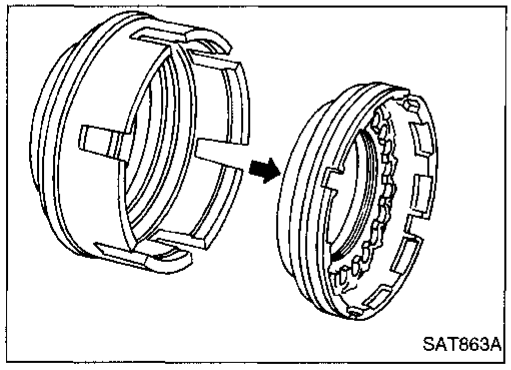

Forward and Overrun Clutches (Cont'd)

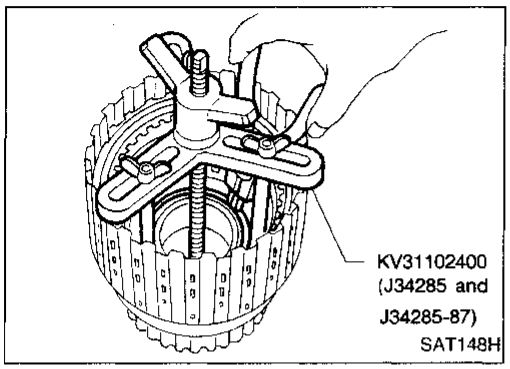

- Removal and installation of return springs

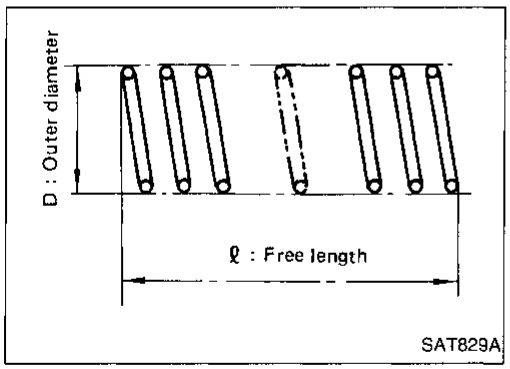

- Inspection of forward clutch and overrun clutch return springs
  Inspection standard:
  Refer to SDS, AT-114.

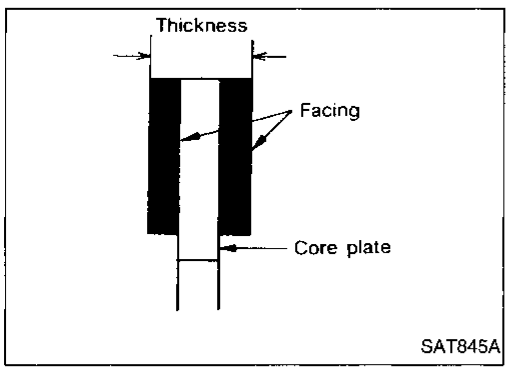

- Inspection of forward clutch drive plates
  Thickness of drive plate:
  Standard
  1.52 - 1.67 mm (0.0598 - 0.0657 in)
  Wear limit
  1.40 mm (0.0551 in)

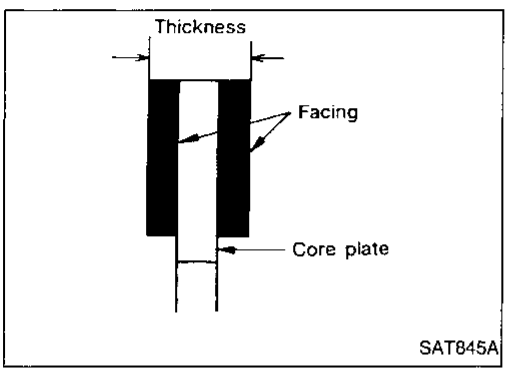

- Inspection of overrun clutch drive plates
  Thickness of drive plate:
  Standard
  1.90 - 2.05 mm (0.0748 - 0.0807 in)
  Wear limit
  1.80 mm (0.0709 in)

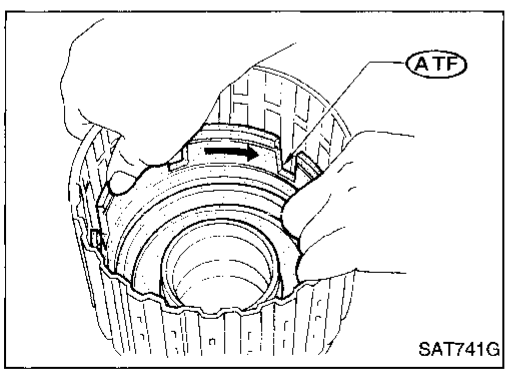

- Installation of forward clutch piston and overrun clutch piston

1. Install forward clutch piston by turning it slowly and evenly.

- **Apply ATF to inner surface of clutch drum.**

Forward and Overrun Clutches (Cont'd)

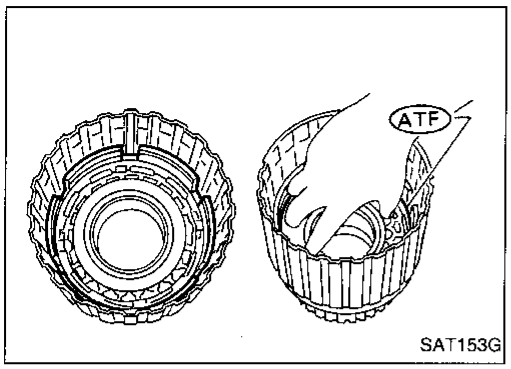

- **Align notch in forward clutch piston with groove in forward clutch drum.**

2. Install overrun clutch by turning it slowly and evenly.

- **Apply ATF to inner surface of forward clutch piston.**

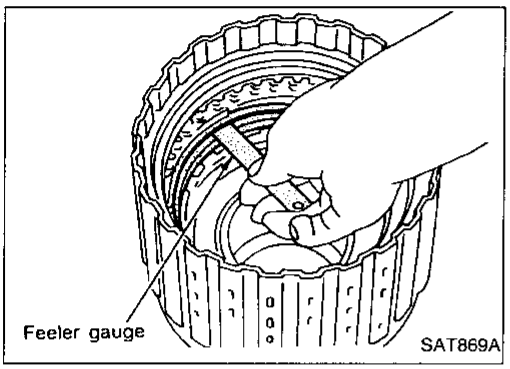

- Measurement of clearance between retaining plate and snap ring of overrun clutch
  Specified clearance:
  Standard
  1.0 - 1.4 mm (0.039 - 0.055 in)
  Allowable limit
  2.0 mm (0.079 in)
  Retaining plate:
  Refer to SDS, AT-115.

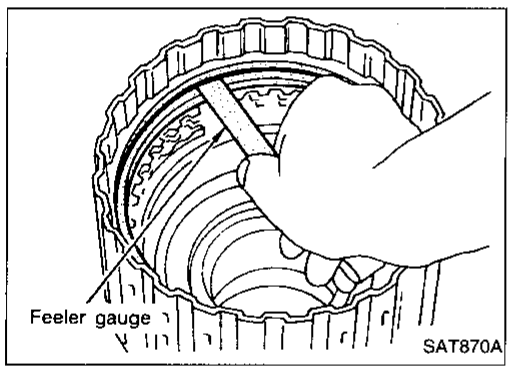

- Measurement of clearance between retaining plate and snap ring of forward clutch
  Specified clearance:
  Standard
  0.35 - 0.75 mm (0.0138 - 0.0295 in)
  Allowable limit
  1.85 mm (0.728 in)
  Retaining plate:
  Refer to SDS, AT-115.

Low & Reverse Brake

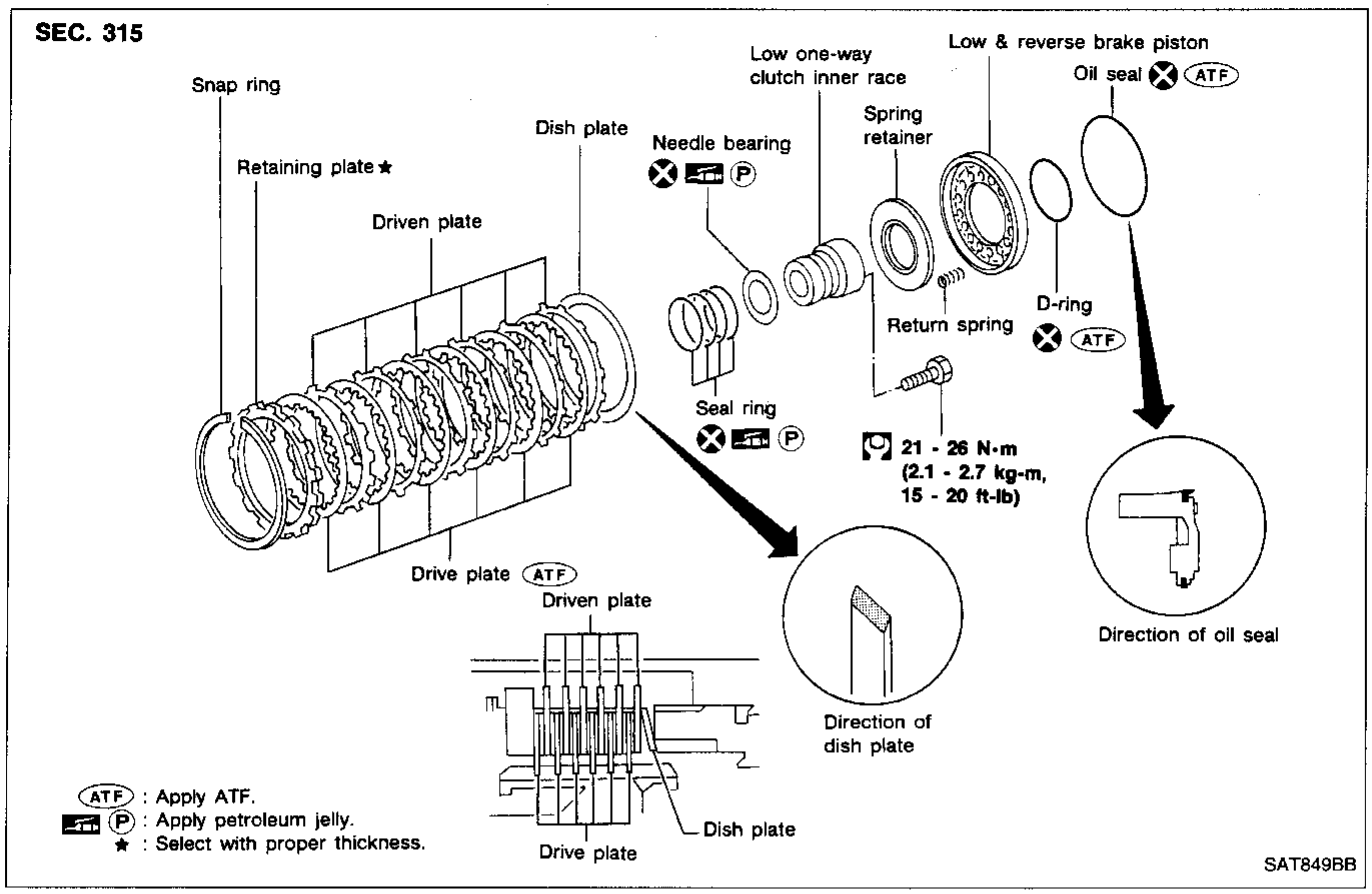

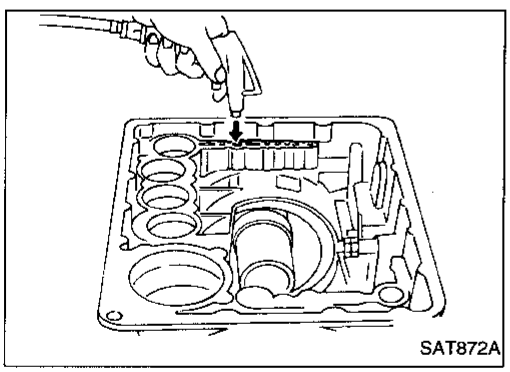

DISASSEMBLY

1. Check operation of low and reverse brake.

a. Install seal ring onto oil pump cover and install reverse clutch. Apply compressed air to oil hole.

b. Check to see that retaining plate moves to snap ring.

c. If retaining plate does not contact snap ring,

- D-ring might be damaged.
- Oil seal might be damaged.
- Fluid might be leaking past piston check ball.

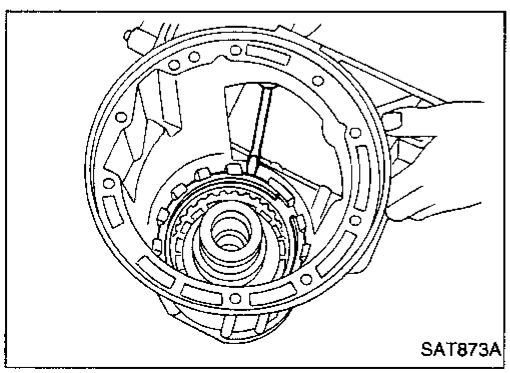

2. Remove snap ring, low & reverse brake drive plates, driven plates and dish plate.

Low & Reverse Brake (Cont'd)

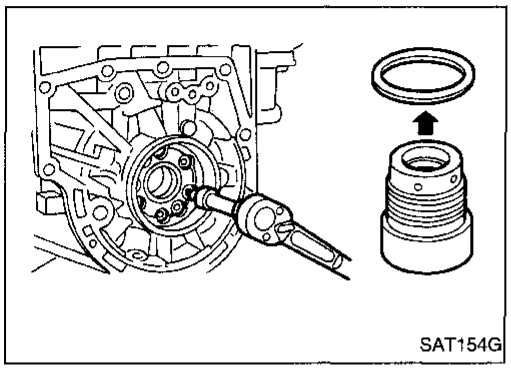

3. Remove low one-way clutch inner race, spring retainer and return spring from transmission case.
4. Remove seal rings from low one-way clutch inner race.
5. Remove needle bearing from low one-way clutch inner race.

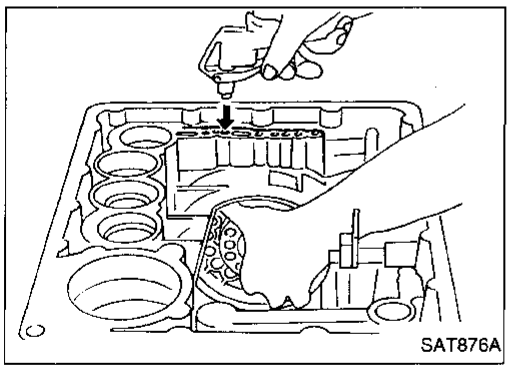

6. Remove low & reverse brake piston using compressed air.
7. Remove oil seal and D-ring from piston.

INSPECTION

Low & reverse brake snap ring and spring retainer

- Check for deformation, or damage.

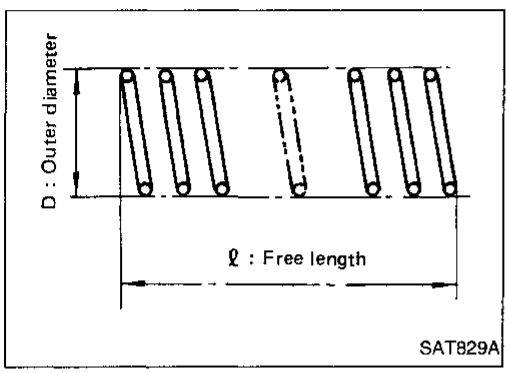

Low & reverse brake return springs

- Check for deformation or damage. Also measure free length and outside diameter.
  Inspection standard:
  Refer to SDS, AT-114.

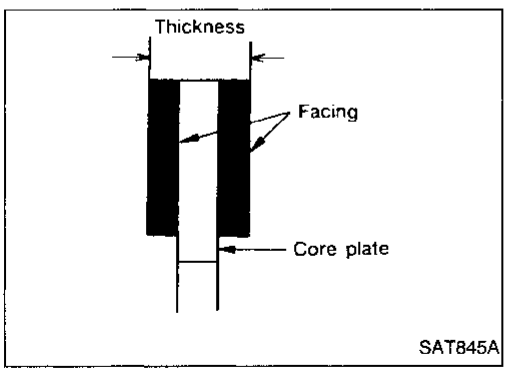

Low & reverse brake drive plates

- Check facing for burns, cracks or damage.
- Measure thickness of facing.
  Thickness of drive plate:
  Standard value
  1.52 - 1.67 mm (0.0598 - 0.0657 in)
  Wear limit
  1.8 mm (0.071 in)
- If not within wear limit, replace.

Low & Reverse Brake (Cont'd)

Low one-way clutch inner race

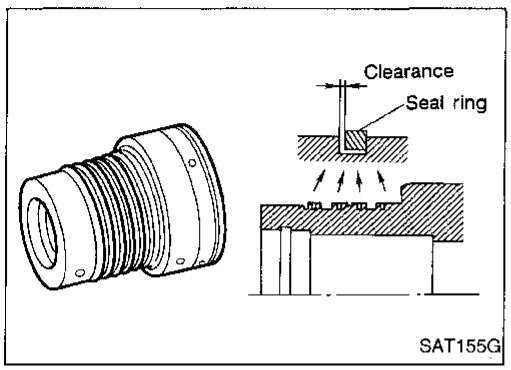

- Check frictional surface of inner race for wear or damage.
- Install new seal rings onto low one-way clutch inner race.
- **Be careful not to expand seal ring gap excessively.**
- Measure seal ring-to-groove clearance.
  Inspection standard:
  Standard value 0.10 - 0.25 mm (0.0039 - 0.0098 in)
  Allowable limit 0.25 mm (0.0098 in)
- If not within allowable limit, replace low one-way clutch inner race.

ASSEMBLY

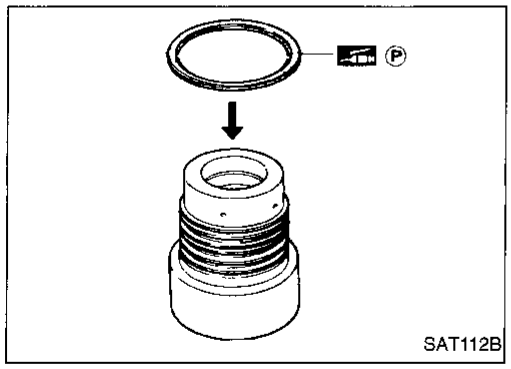

1. Install needle bearing onto one-way clutch inner race.
- **Pay attention to its direction — Black surface goes to rear side.**
- **Apply petroleum jelly to thrust washers.**

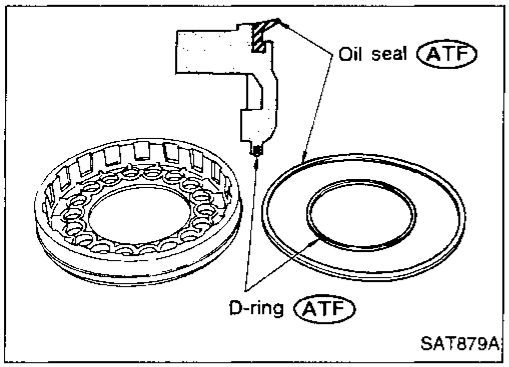

2. Install oil seal and D-ring onto piston.
- **Apply ATF to oil seal and D-ring.**

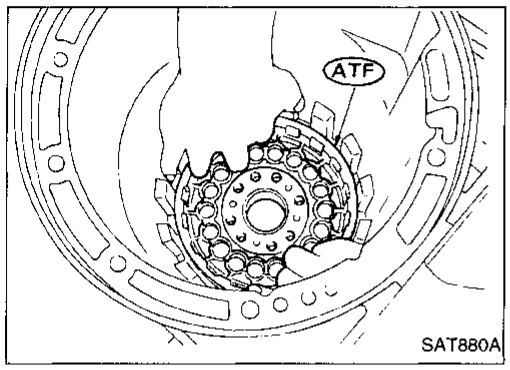

3. Install piston by rotating it slowly and evenly.
- **Apply ATF to inner surface of transmission case.**

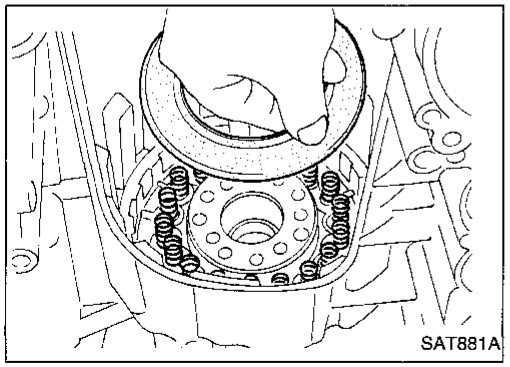

4. Install return springs, spring retainer and low one-way clutch inner race onto transmission case.
5. Install dish plate, low & reverse brake drive plates, driven plates and retaining plate.
6. Install snap ring on transmission case.

Low & Reverse Brake (Cont'd)

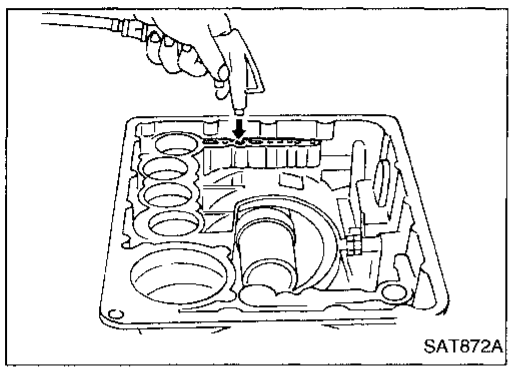

7. Check operation of low & reverse brake clutch piston. Refer to "DISASSEMBLY", AT-83.

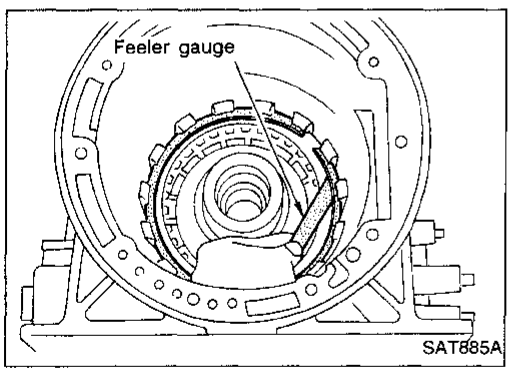

8. Measure clearance between retaining plate and snap ring. If not within allowable limit, select proper retaining plate.
   Specified clearance:
   Standard
   0.8 - 1.1 mm (0.031 - 0.043 in)
   Allowable limit
   2.3 mm (0.091 in)
   Retaining plate:
   Refer to SDS, AT-115.

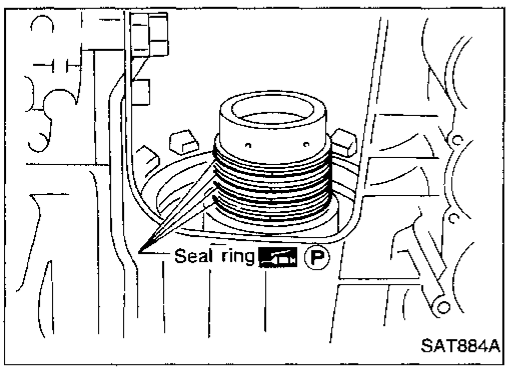

9. Install low one-way clutch inner race seal ring.
- **Apply petroleum jelly to seal ring.**
- **Make sure seal rings are pressed firmly into place and held by petroleum jelly.**

Forward Clutch Drum Assembly

SEC. 315

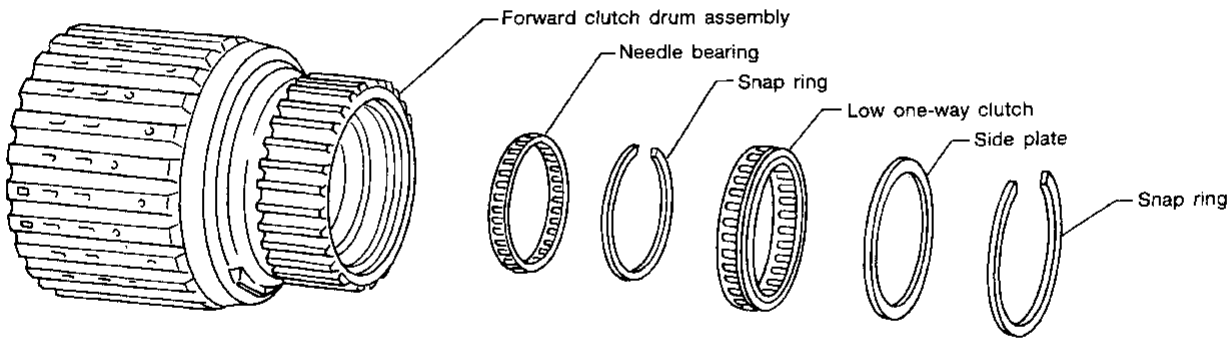

Forward Clutch Drum Assembly (Cont'd)

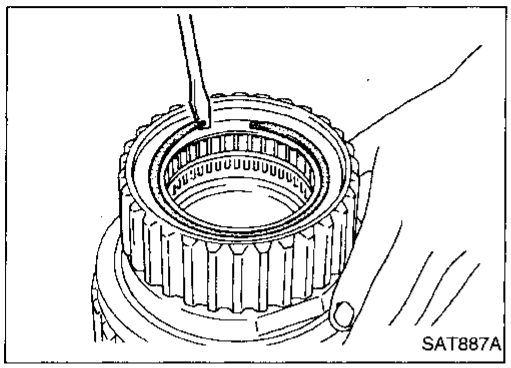
SAT887A

DISASSEMBLY

1. Remove snap ring from forward clutch drum.
2. Remove side plate from forward clutch drum.
3. Remove low one-way clutch from forward clutch drum.
4. Remove snap ring from forward clutch drum.
5. Remove needle bearing from forward clutch drum.

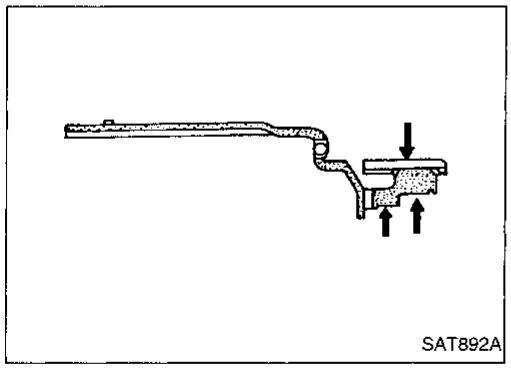
SAT892A

INSPECTION

Forward clutch drum

- Check spline portion for wear or damage.
- Check frictional surfaces of low one-way clutch and needle bearing for wear or damage.

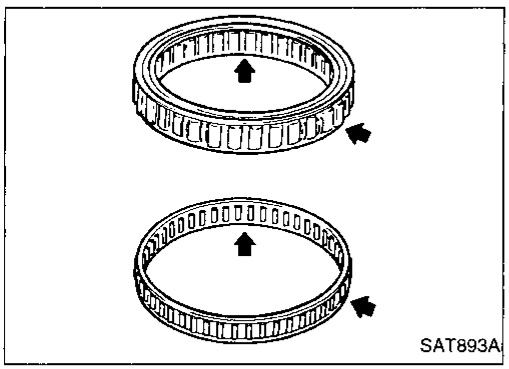
SAT893A

Needle bearing and low one-way clutch

- Check frictional surface for wear or damage.

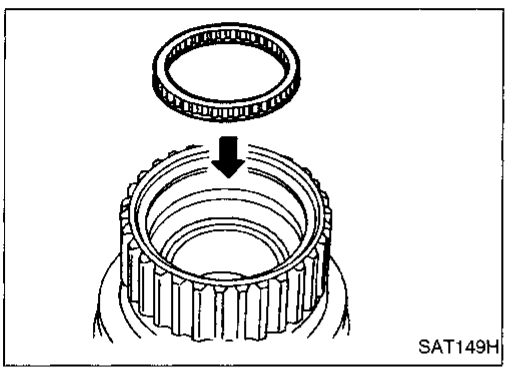
SAT149H

ASSEMBLY

1. Install needle bearing in forward clutch drum.
2. Install snap ring onto forward clutch drum.

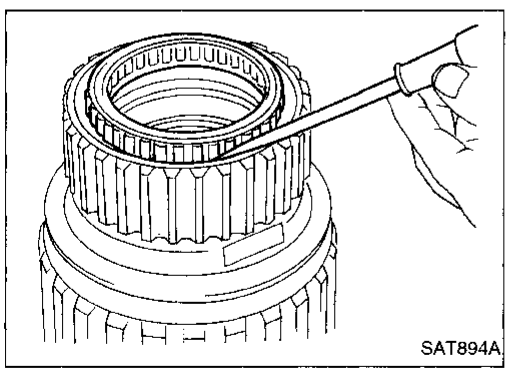
SAT894A

3. Install low one-way clutch onto forward clutch drum by pushing the roller in evenly.

Forward Clutch Drum Assembly (Cont'd)

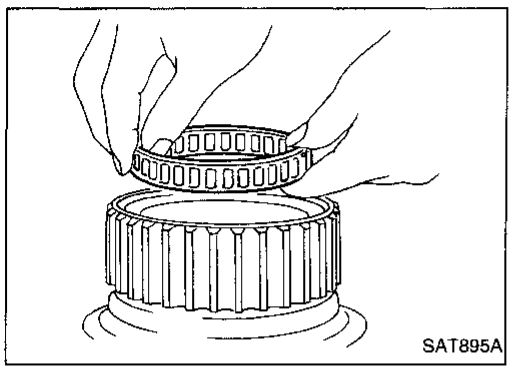

- **Install low one-way clutch with flange facing rearward.**

4. Install side plate onto forward clutch drum.
5. Install snap ring onto forward clutch drum.

Rear Internal Gear and Forward Clutch Hub

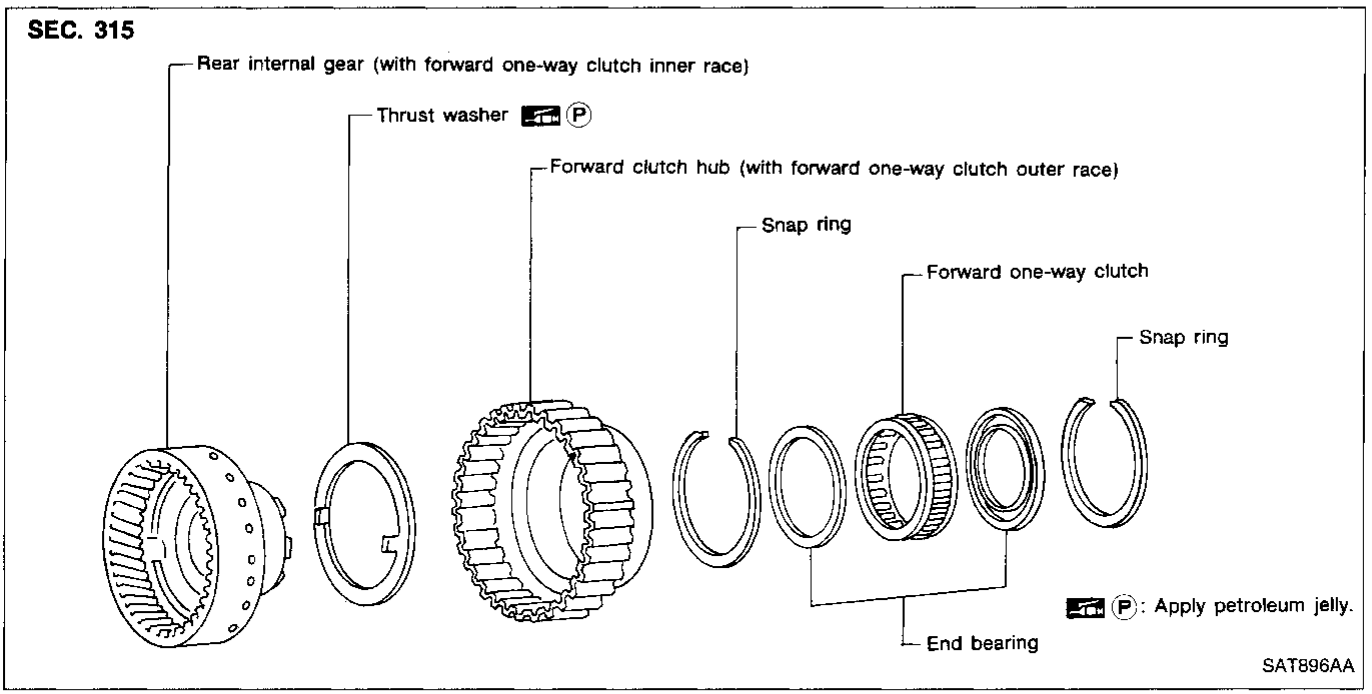

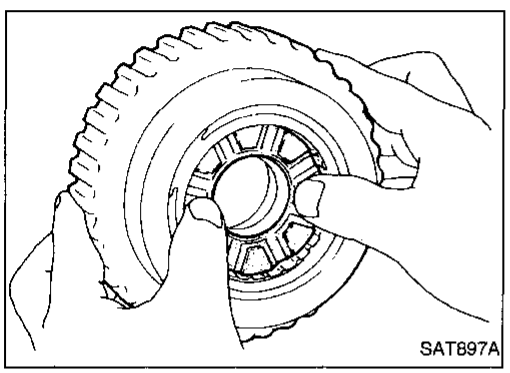

DISASSEMBLY

1. Remove rear internal gear by pushing forward clutch hub forward.
2. Remove thrust washer from rear internal gear.
3. Remove snap ring from forward clutch hub.
4. Remove end bearing.

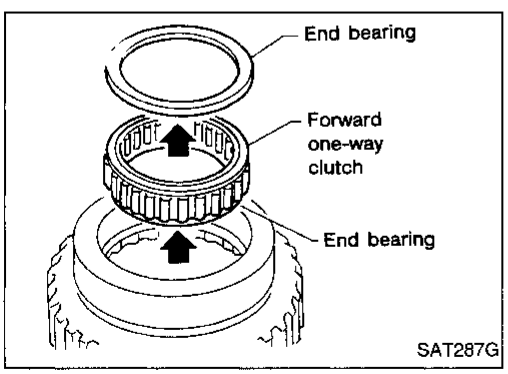

5. Remove forward one-way clutch and end bearing as a unit from forward clutch hub.
6. Remove snap ring from forward clutch hub.

Rear Internal Gear and Forward Clutch Hub (Cont'd)

INSPECTION

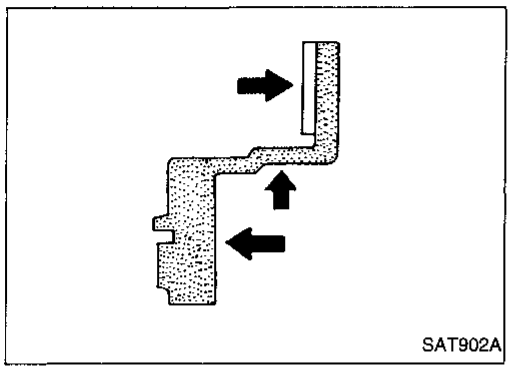
SAT902A

Rear internal gear and forward clutch hub

- Check gear for excessive wear, chips or cracks.
- Check frictional surfaces of forward one-way clutch and thrust washer for wear or damage.
- Check spline for wear or damage.

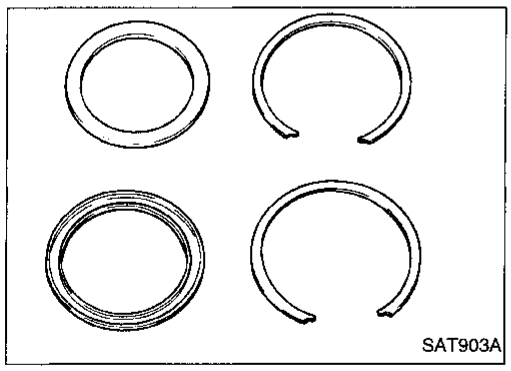
SAT903A

Snap ring and end bearing

- Check for deformation or damage.

ASSEMBLY

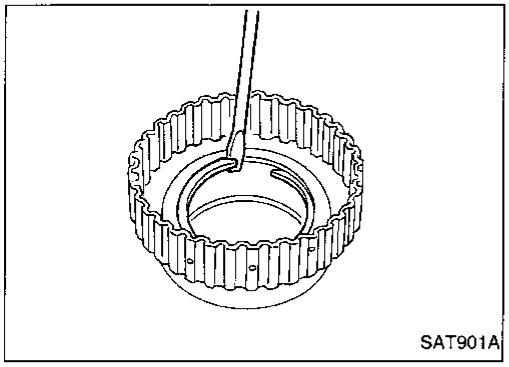
SAT901A

1. Install snap ring onto forward clutch hub.
2. Install end bearing.

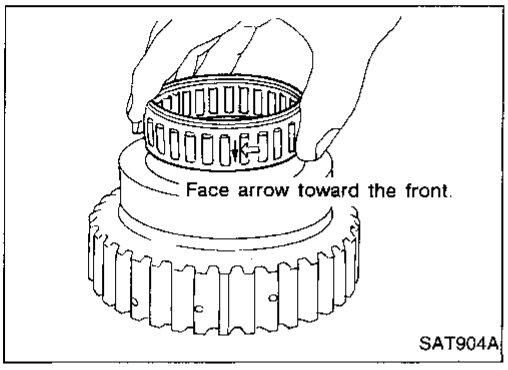

SAT904A

3. Install forward one-way clutch onto clutch hub.
- **Install forward one-way clutch with flange facing rearward.**
4. Install end bearing.
5. Install snap ring onto forward clutch hub.

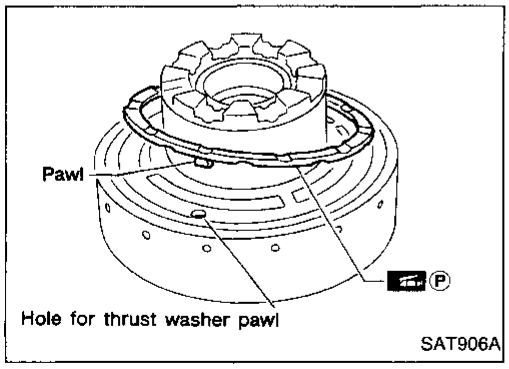

SAT906A

6. Install thrust washer onto rear internal gear.
- **Apply petroleum jelly to thrust washer.**
- **Securely insert pawls of thrust washer into holes in rear internal gear.**

Rear Internal Gear and Forward Clutch Hub (Cont'd)

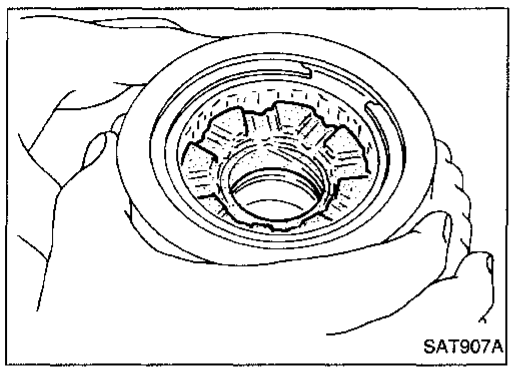

7. Position forward clutch hub in rear internal gear.

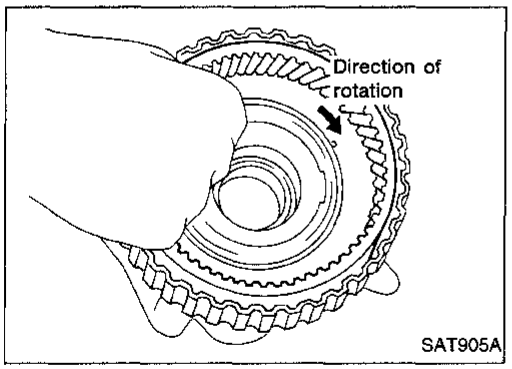

8. After installing, check to assure that forward clutch hub rotates clockwise.

Band Servo Piston Assembly

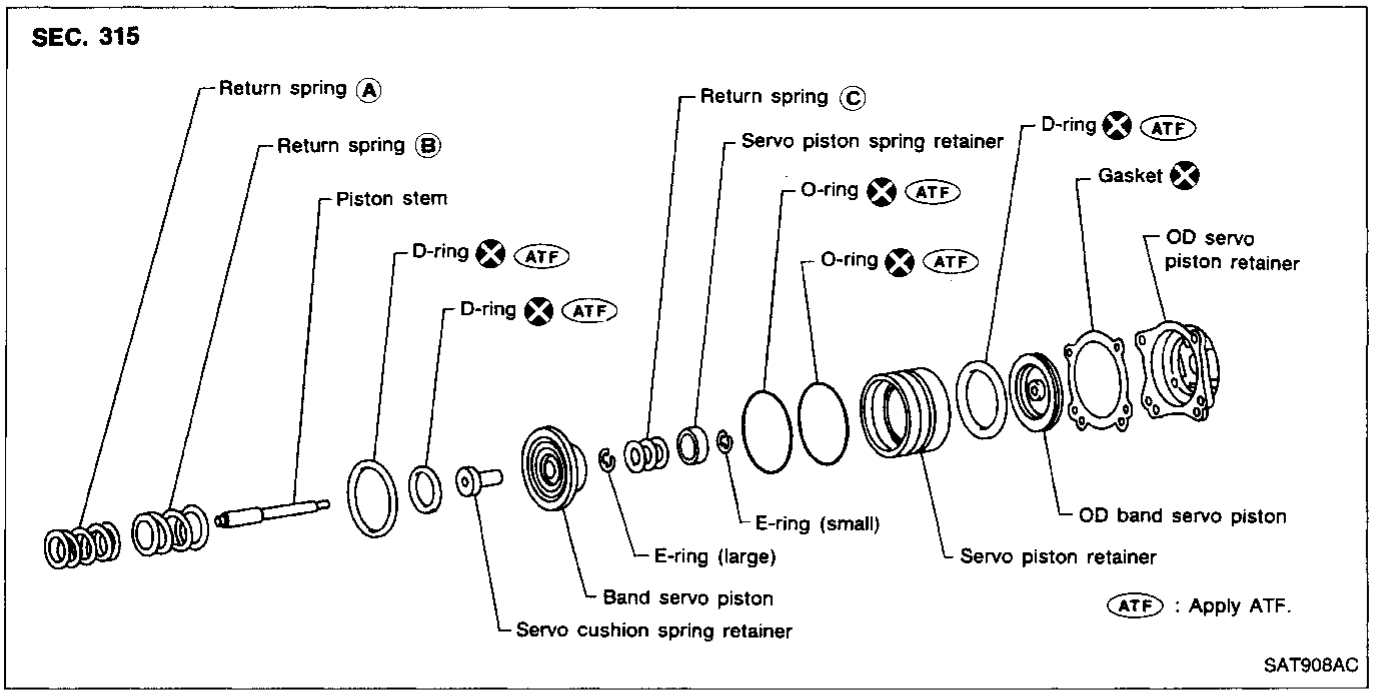

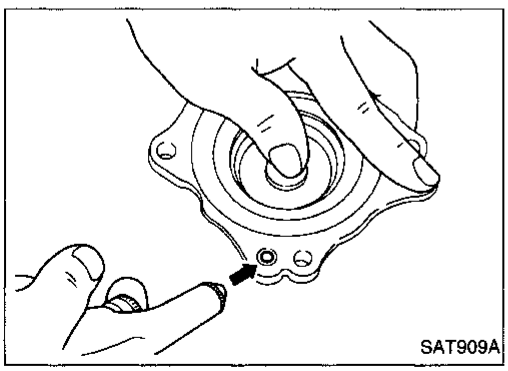

DISASSEMBLY

1. Block one oil hole in OD servo piston retainer and the center hole in OD band servo piston.
2. Apply compressed air to the other oil hole in piston retainer to remove OD band servo piston from retainer.
3. Remove D-ring from OD band servo piston.

Band Servo Piston Assembly (Cont'd)

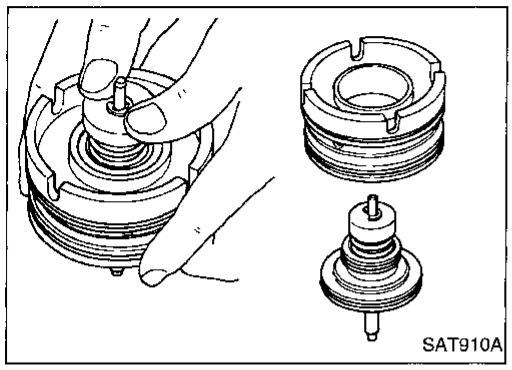

4. Remove band servo piston assembly from servo piston retainer by pushing it forward.

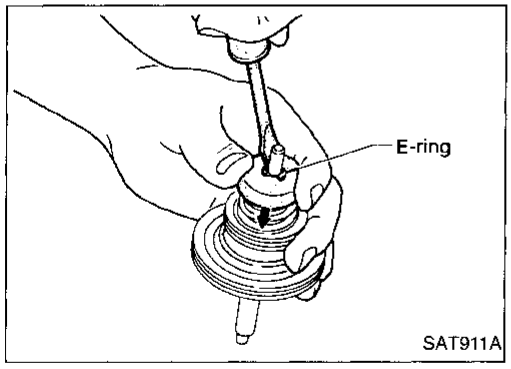

5. Place piston stem end on a wooden block. While pushing servo piston spring retainer down, remove E-ring.

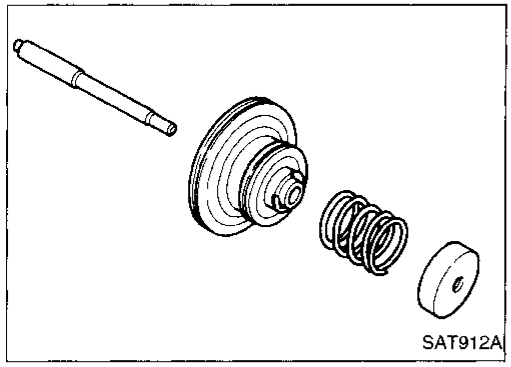

6. Remove servo piston spring retainer, return spring © and piston stem from band servo piston.

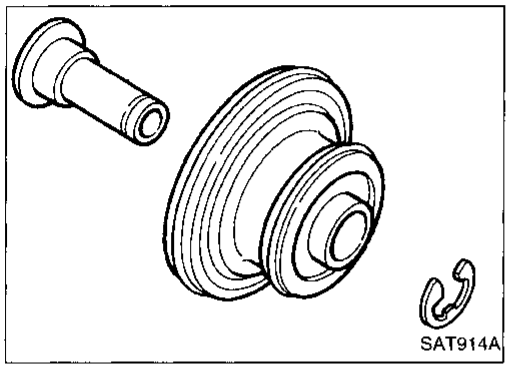

7. Remove E-ring from band servo piston.
8. Remove servo cushion spring retainer from band servo piston.
9. Remove D-rings from band servo piston.
10. Remove O-rings from servo piston retainer.

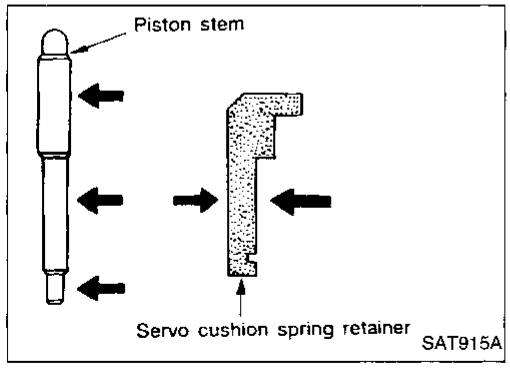

INSPECTION

Pistons, retainers and piston stem

- Check frictional surfaces for abnormal wear or damage.

Band Servo Piston Assembly (Cont'd)

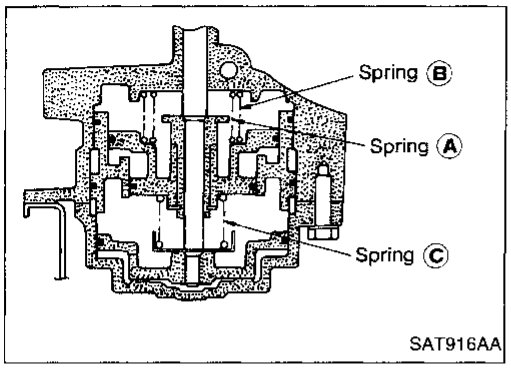

Return springs

- Check for deformation or damage. Measure free length and outer diameter.
  Inspection standard:
  Refer to SDS, AT-114.

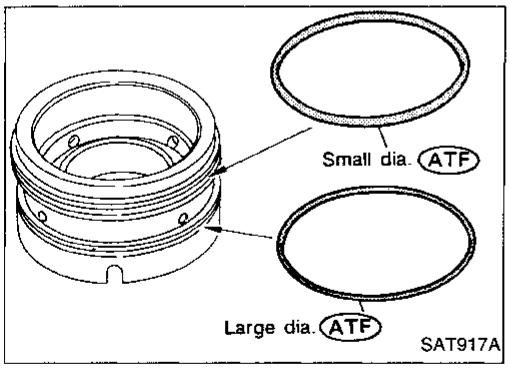

ASSEMBLY

1. Install O-rings onto servo piston retainer
- **Apply ATF to O-rings.**
- **Pay attention to position of each O-ring.**

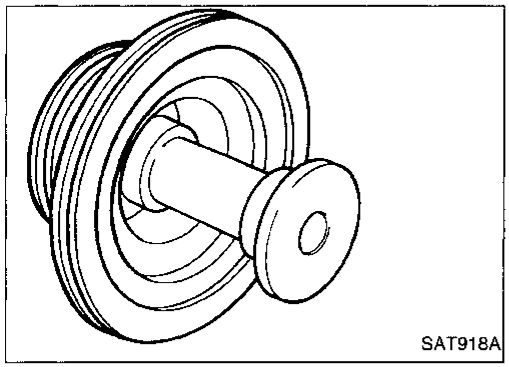

2. Install servo cushion spring retainer onto band servo piston.

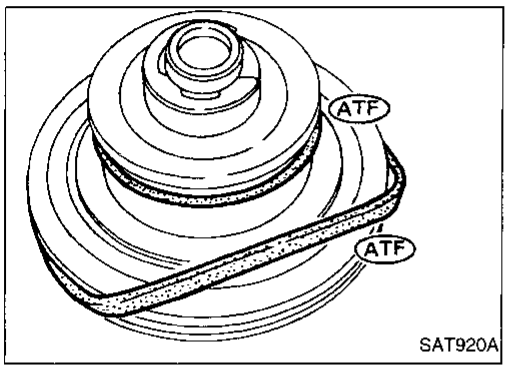

3. Install E-ring onto servo cushion spring retainer.
4. Install D-rings onto band servo piston.
- **Apply ATF to D-rings.**

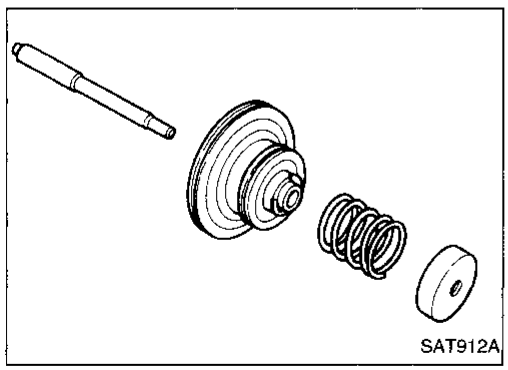

5. Install servo piston spring retainer, return spring Ⓒ and piston stem onto band servo piston.

Band Servo Piston Assembly (Cont'd)

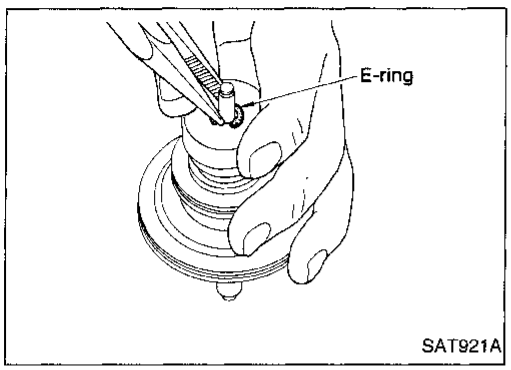

6. Place piston stem end on a wooden block. While pushing servo piston spring retainer down, install E-ring.

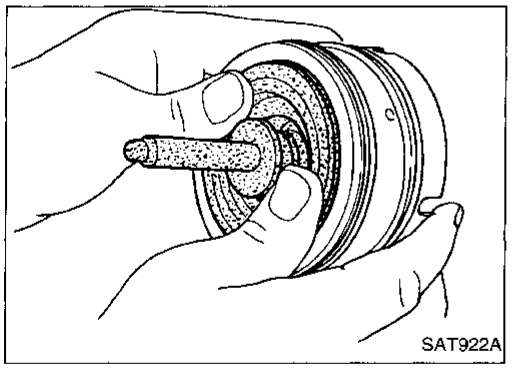

7. Install band servo piston assembly onto servo piston retainer by pushing it inward.

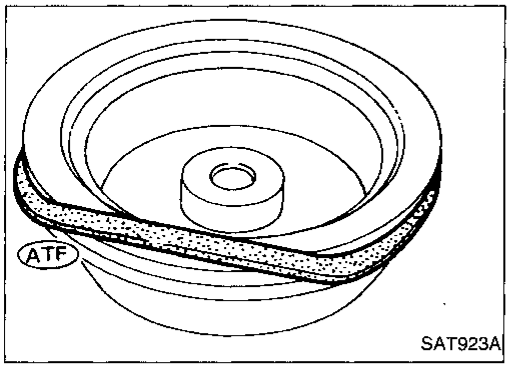

8. Install D-ring on OD band servo piston.
- **Apply ATF to D-ring.**

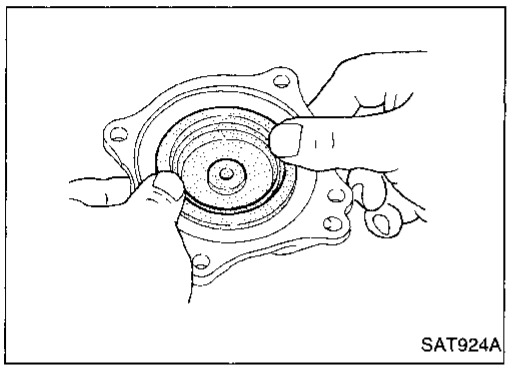

9. Install OD band servo piston onto OD servo piston retainer by pushing it inward.

Parking Pawl Components

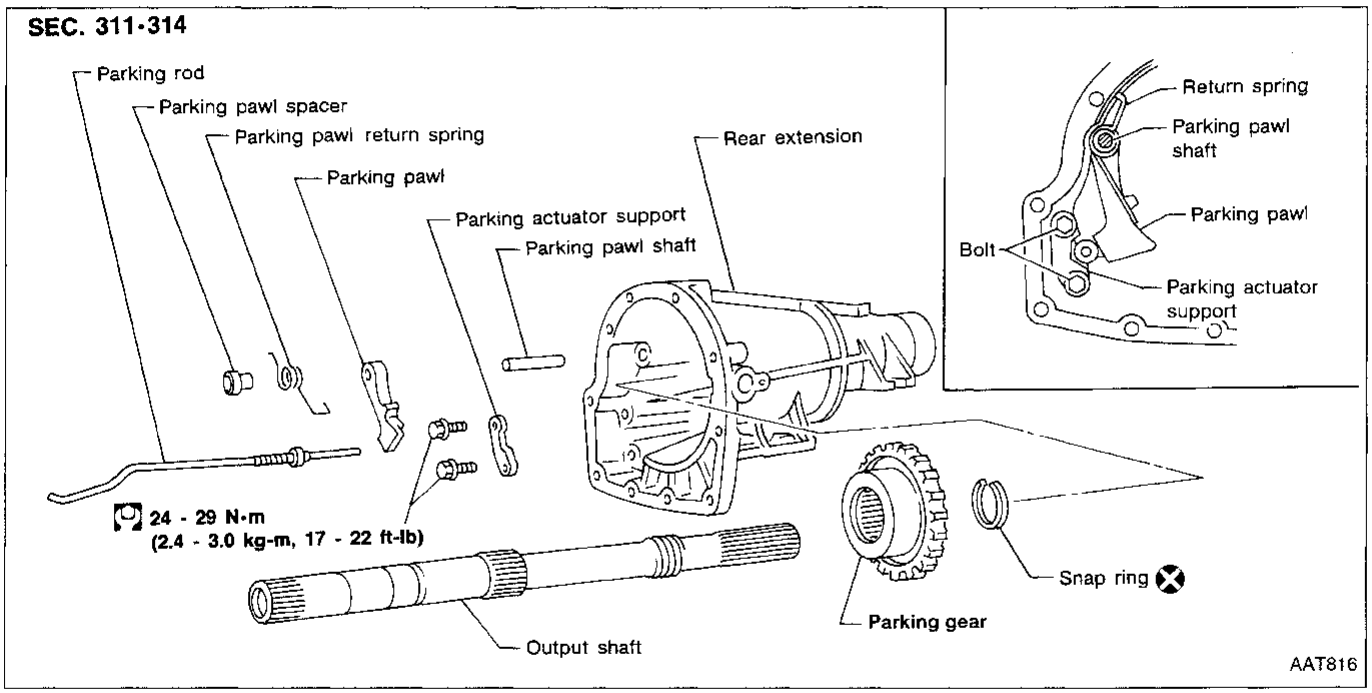

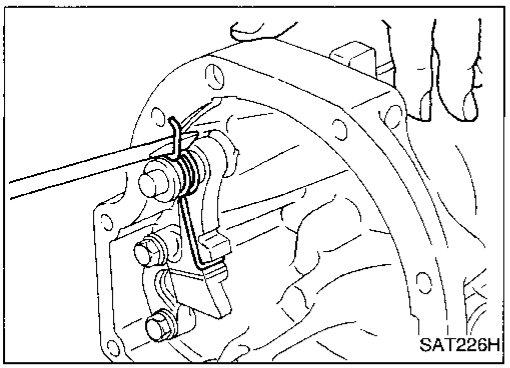

DISASSEMBLY

1. Slide return spring to the front of rear extension flange.

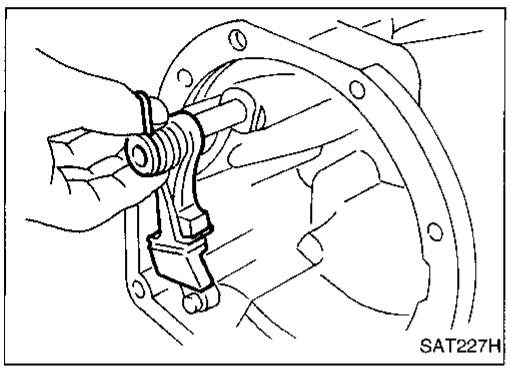

2. Remove return spring, pawl spacer and parking pawl from rear extension.
3. Remove parking pawl shaft from rear extension.

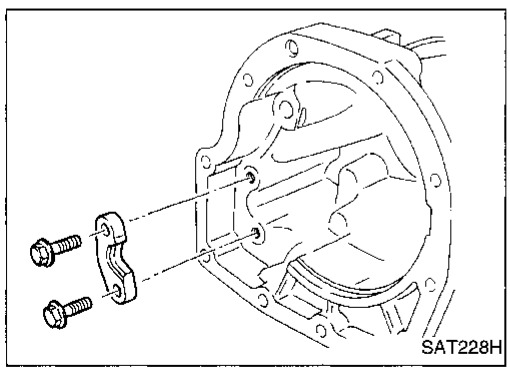

4. Remove parking actuator support from rear extension.

Parking Pawl Components (Cont'd)

INSPECTION

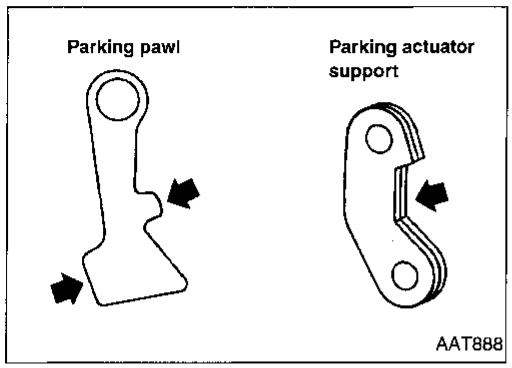

Parking pawl and parking actuator support

- Check contact surface of parking rod and parking gear for wear.

ASSEMBLY

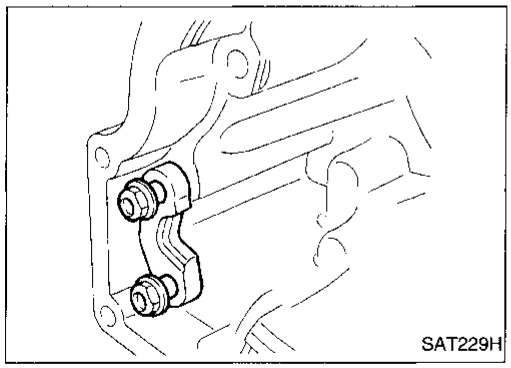

1. Install parking actuator support onto rear extension.
2. Insert parking pawl shaft into rear extension.

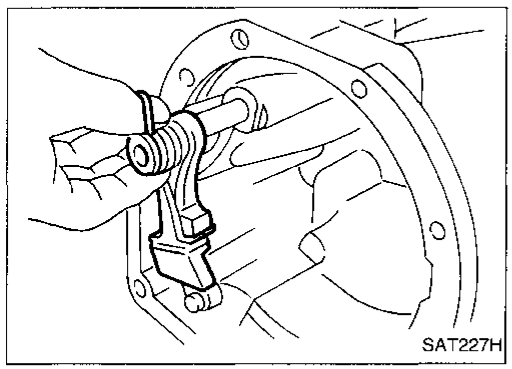

3. Install return spring, pawl spacer and parking pawl onto parking pawl shaft.

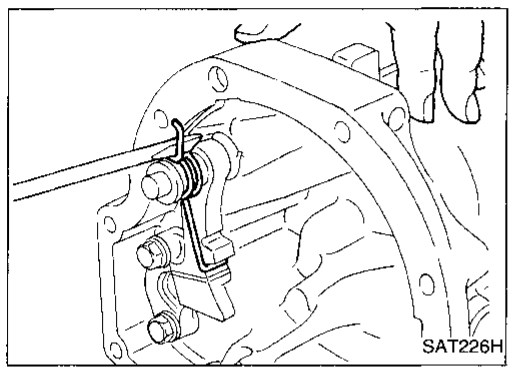

4. Bend return spring upward and install it onto rear extension.

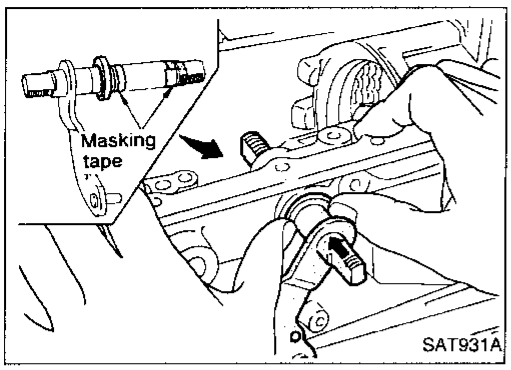

Assembly (1)

1. Install manual shaft components.

a. Install oil seal onto manual shaft.

- **Apply ATF to oil seal.**
- **Wrap threads of manual shaft with masking tape.**

b. Insert manual shaft and oil seal as a unit into transmission case.

c. Remove masking tape.

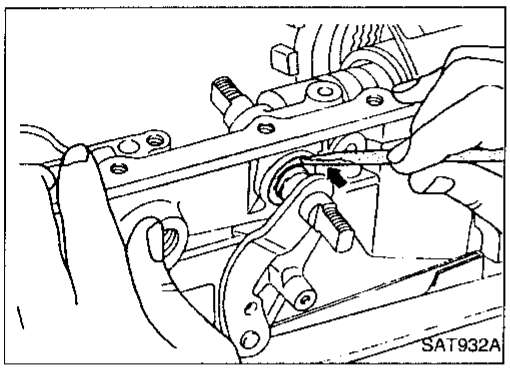

d. Push oil seal evenly and install it onto transmission case.

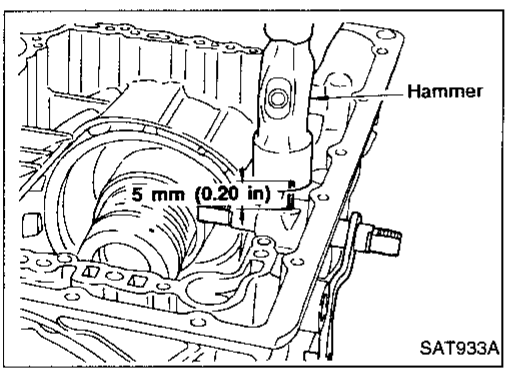

e. Align groove in shaft with drive pin hole, then drive pin into position as shown in figure at left.

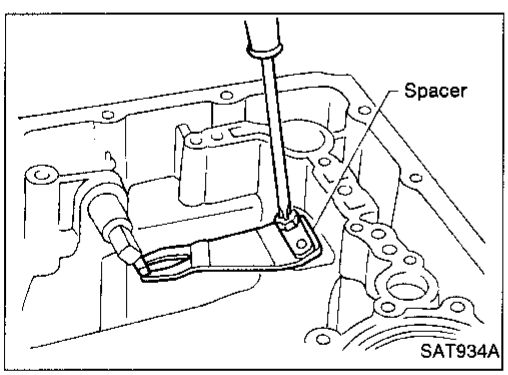

f. Install detent spring and spacer.

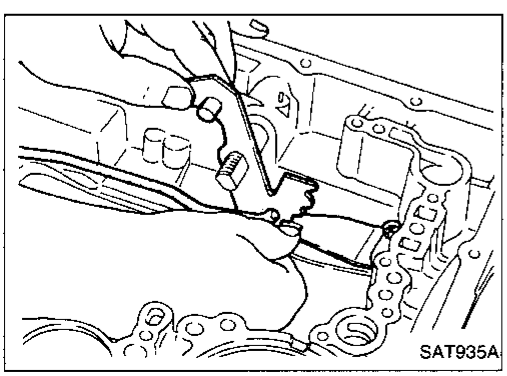

g. While pushing detent spring down, install manual plate onto manual shaft.

Assembly (1) (Cont'd)

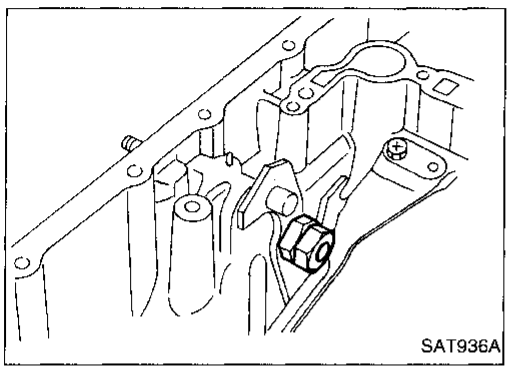

h. Install lock nuts onto manual shaft.

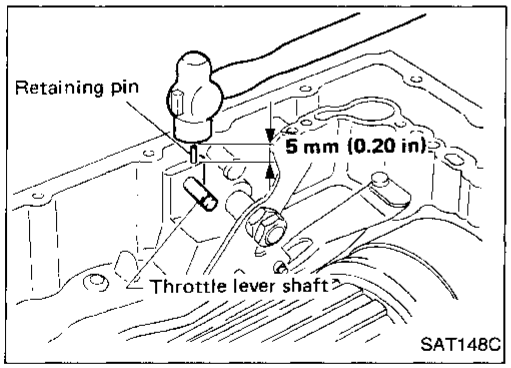

2. Install throttle lever components.
a. Install throttle lever shaft.
b. Align groove in shaft with drive pin hole, then drive pin into position as shown in figure at left.

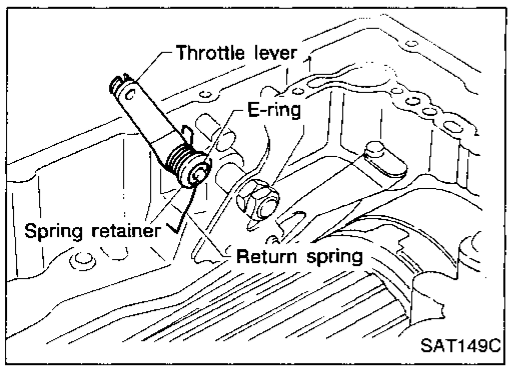

c. Install throttle lever, return spring, spring retainer and E-ring.

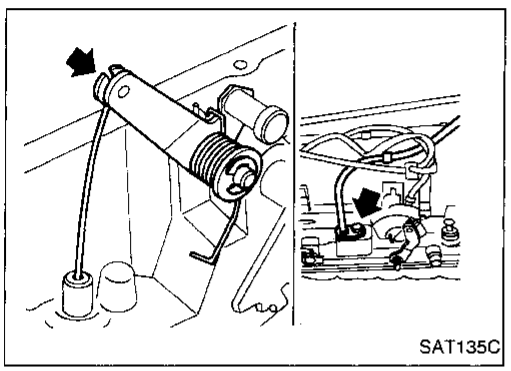

d. Install throttle wire.

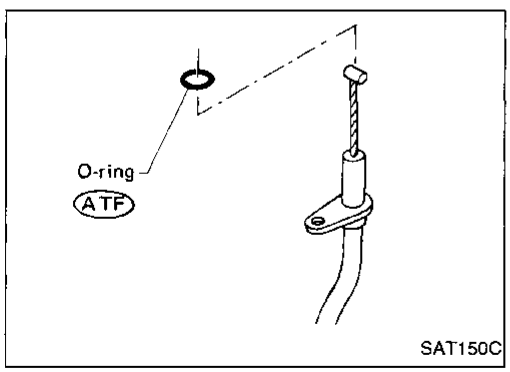

- **Apply ATF to O-ring.**

Assembly (1) (Cont'd)

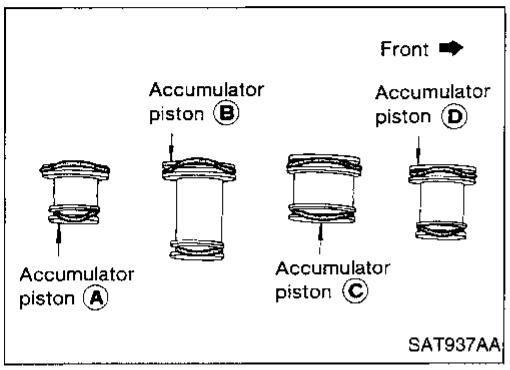

3. Install accumulator piston.
a. Install O-rings onto accumulator piston.
- **Apply ATF to O-rings.**
  Accumulator piston O-rings:
  Refer to SDS, AT-114.

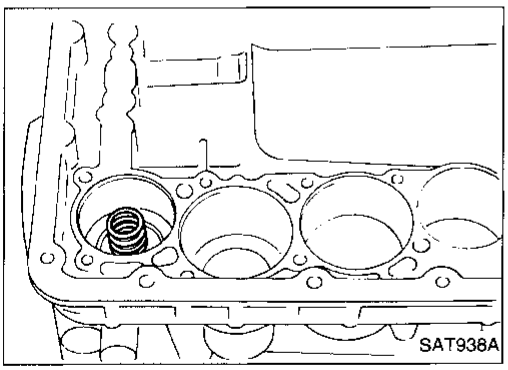

b. Install return spring for accumulator Ⓐ onto transmission case.
Free length of return spring:
Refer to SDS, AT-114.

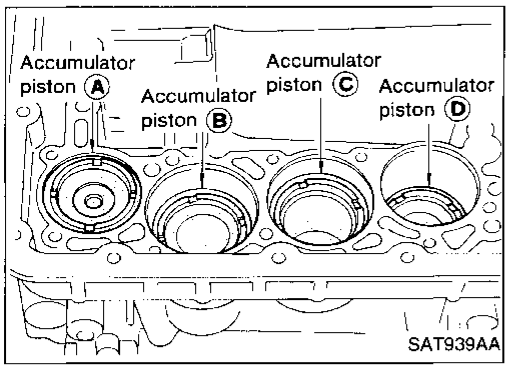

c. Install accumulator pistons Ⓐ, Ⓑ, Ⓒ and Ⓓ.
- **Apply ATF to transmission case.**

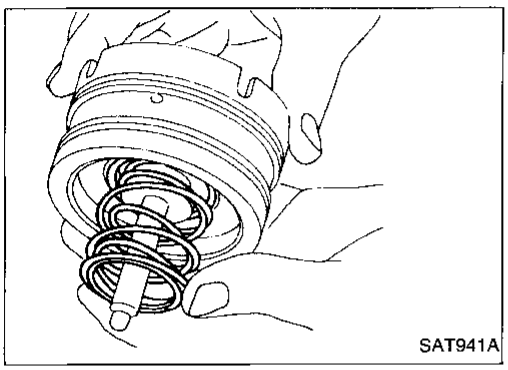

4. Install band servo piston.
a. Install return springs onto band servo piston.

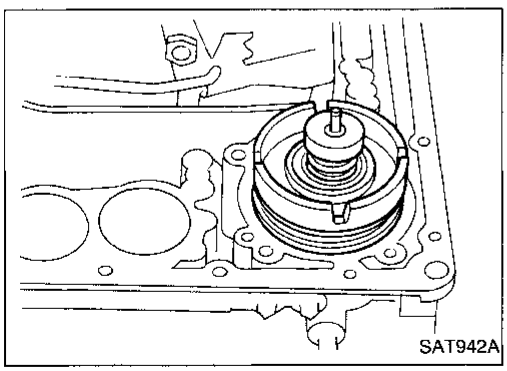

b. Install band servo piston onto transmission case.
- **Apply ATF to O-ring of band servo piston and transmission case.**

c. Install gasket for band servo onto transmission case.

Assembly (1) (Cont'd)

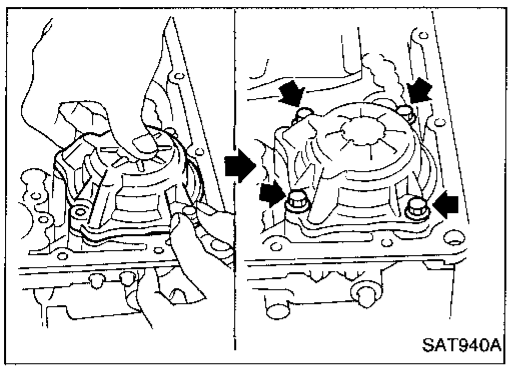

d. Install OD servo piston retainer onto transmission case.

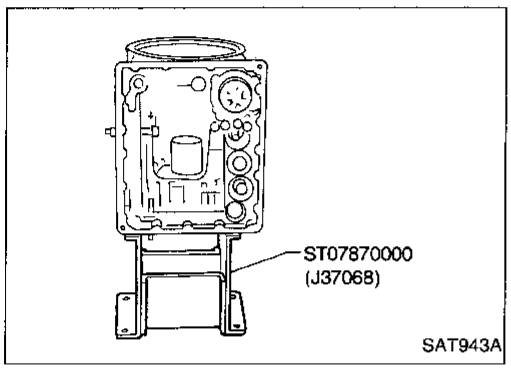

5. Install rear side clutch and gear components.
a. Place transmission case in vertical position.

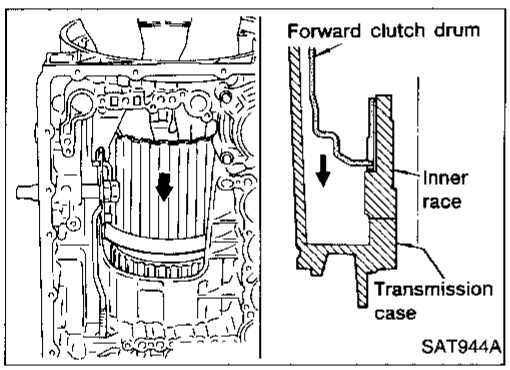

b. Slightly lift forward clutch drum assembly and slowly rotate it clockwise until its hub passes fully over the clutch inner race inside transmission case.

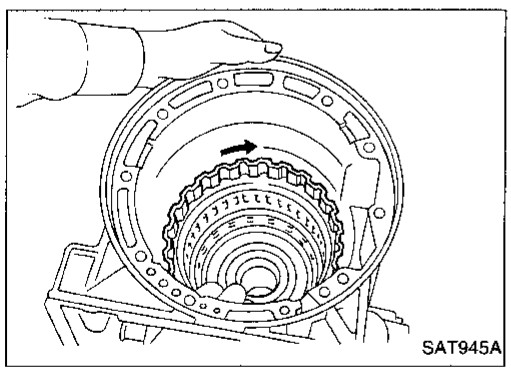

c. Check to be sure that rotation direction of forward clutch assembly is correct.

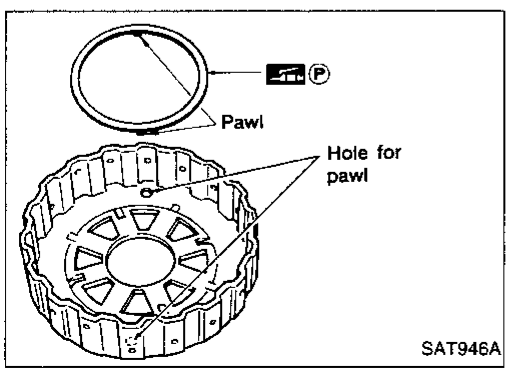

d. Install thrust washer onto front of overrun clutch hub.
- **Apply petroleum jelly to the thrust washer.**
- **Insert pawls of thrust washer securely into holes in overrun clutch hub.**

Assembly (1) (Cont'd)

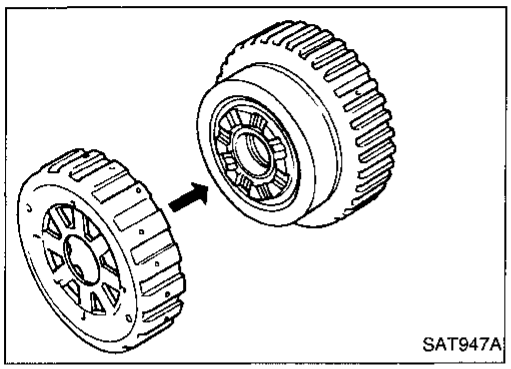

e. Install overrun clutch hub onto rear internal gear assembly.

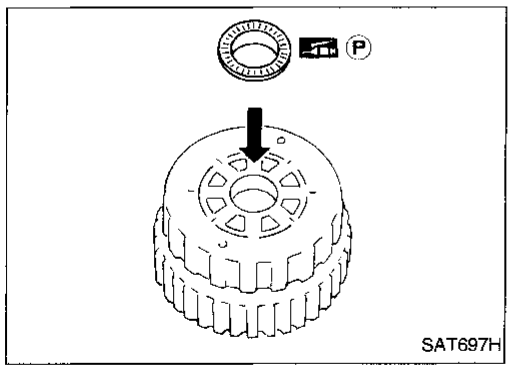

f. Install needle bearing onto rear of overrun clutch hub.
- **Apply petroleum jelly to needle bearing.**

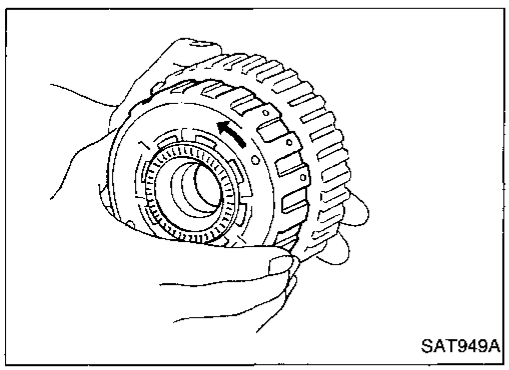

g. Check that overrun clutch hub rotates as shown while holding forward clutch hub.

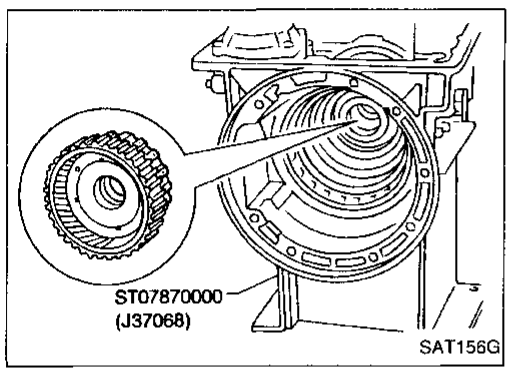

h. Place transmission case into horizontal position.
i. Install rear internal gear, forward clutch hub and overrun clutch hub as a unit onto transmission case.

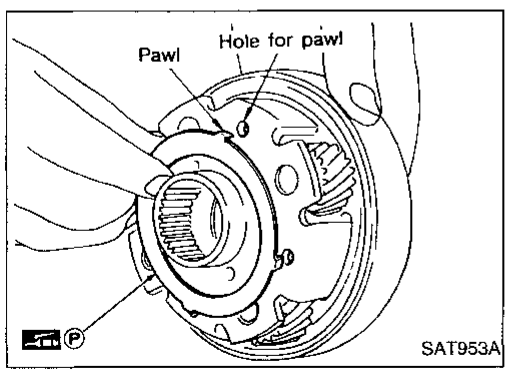

j. Install needle bearing onto rear internal gear.
- **Apply petroleum jelly to needle bearing.**

k. Install bearing race onto rear of front internal gear.
- **Apply petroleum jelly to bearing race.**
- **Securely engage pawls of bearing race with holes in front internal gear.**

Assembly (1) (Cont'd)

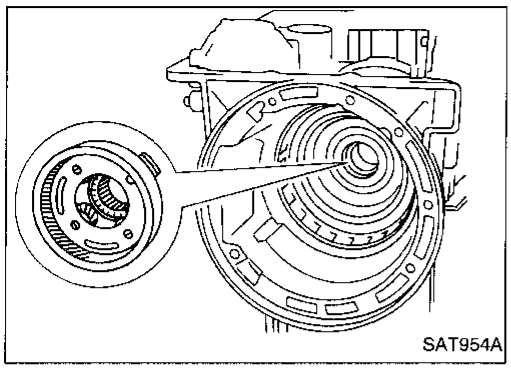
SAT954A

l. Install front internal gear on transmission case.

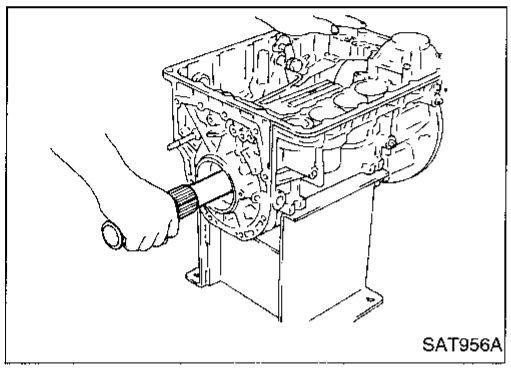
SAT956A

6. Install output shaft and parking gear.
a. Insert output shaft from rear of transmission case while slightly lifting front internal gear.
- **Do not force output shaft against front of transmission case.**

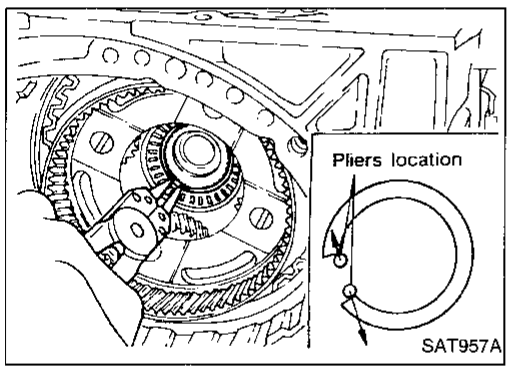

SAT957A

b. Carefully push output shaft against front of transmission case. Install snap ring on front of output shaft.
- **Check to be sure output shaft cannot be removed in rear direction.**

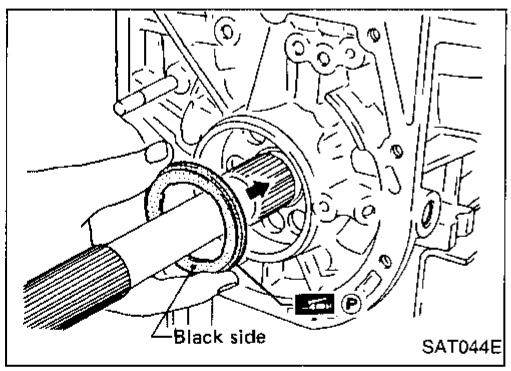

SAT044E

c. Install needle bearing on transmission case.
- **Pay attention to its direction — Black side goes to rear.**
- **Apply petroleum jelly to needle bearing.**

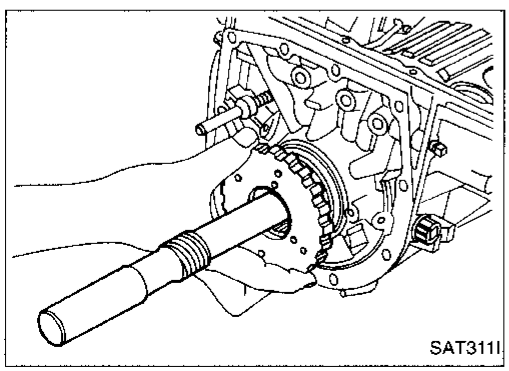
SAT311I

d. Install parking gear on transmission case.

Assembly (1) (Cont'd)

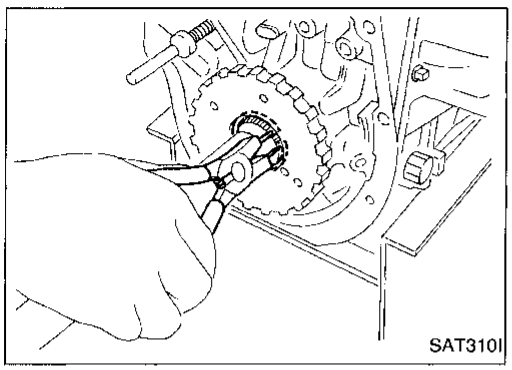

e. Install snap ring on rear of output shaft.

- **Check to be sure output shaft cannot be removed in forward direction.**

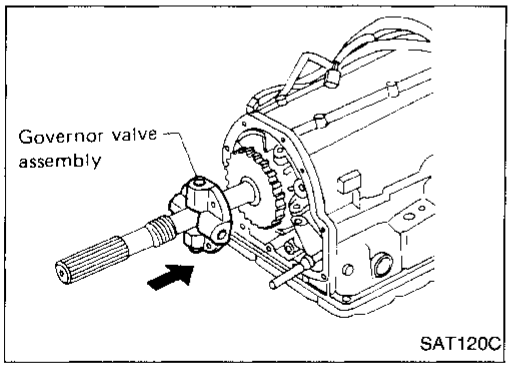

f. Install governor valve assembly on oil distributor.

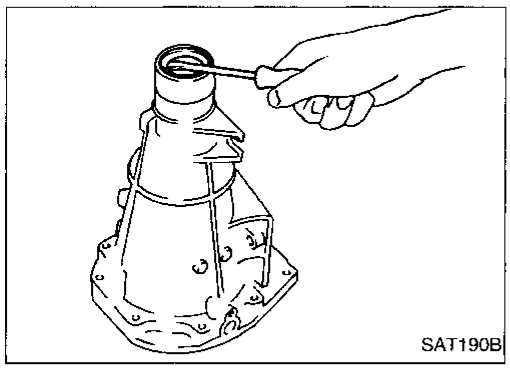

7. Install rear extension case.

a. Install oil seal on rear extension case.

- **Apply ATF to oil seal.**

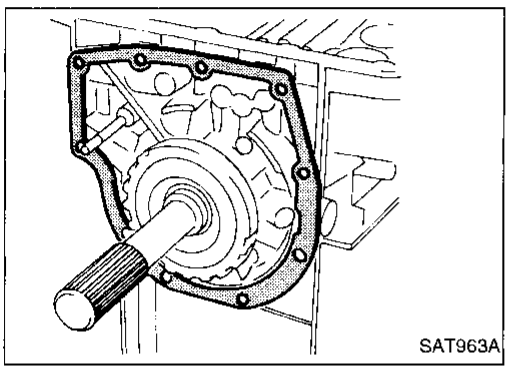

b. Install rear extension gasket on transmission case.

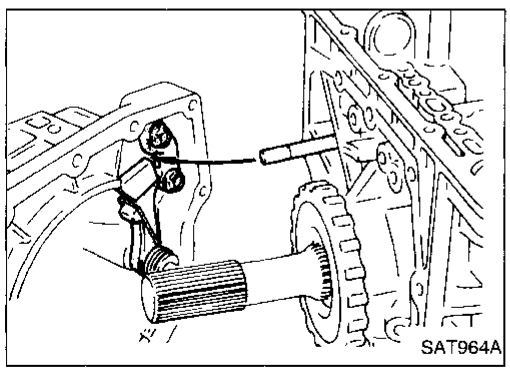

c. Install parking rod on transmission case.

Assembly (1) (Cont'd)

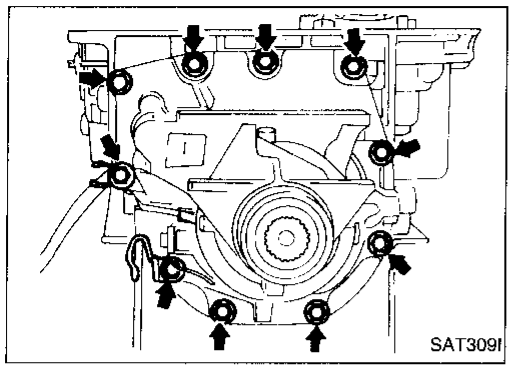

d. Install rear extension case on transmission case. Tighten bolts to specified torque.
: 20 - 25 N·m (2.0 - 2.5 kg-m, 14 - 18 ft-lb)

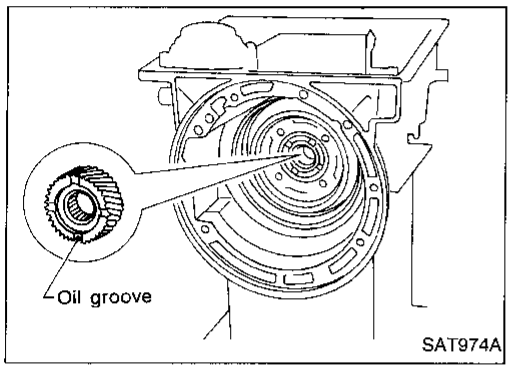

8. Install front side clutch and gear components.
a. Install rear sun gear on transmission case.
- **Pay attention to its direction.**

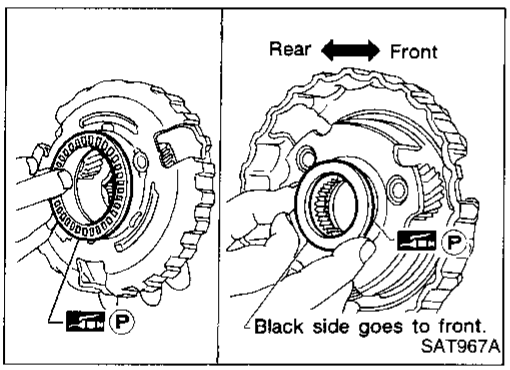

b. Install needle bearing on front of front planetary carrier.
- **Apply petroleum jelly to needle bearing.**

c. Install needle bearing on rear of front planetary carrier.
- **Apply petroleum jelly to needle bearing.**
- **Pay attention to its direction — Black side goes to front.**

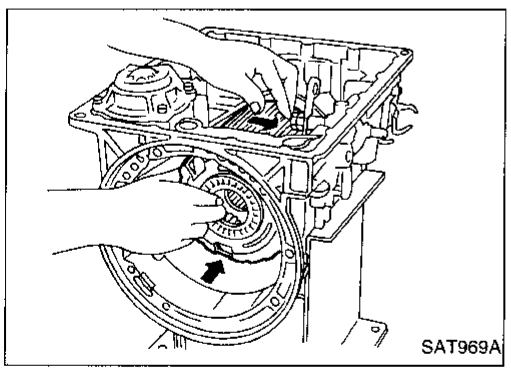

d. While rotating forward clutch drum clockwise, install front planetary carrier on forward clutch drum.

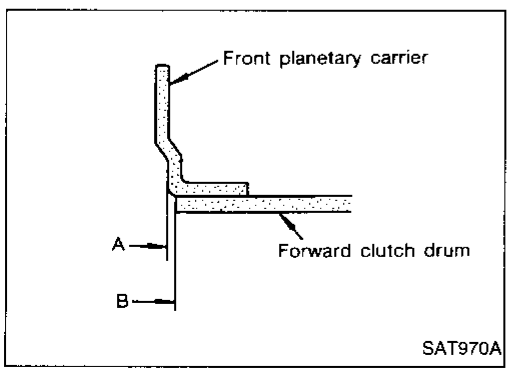

- **Check that portion A of front planetary carrier protrudes approximately 2 mm (0.08 in) beyond portion B of forward clutch assembly.**

Assembly (1) (Cont'd)

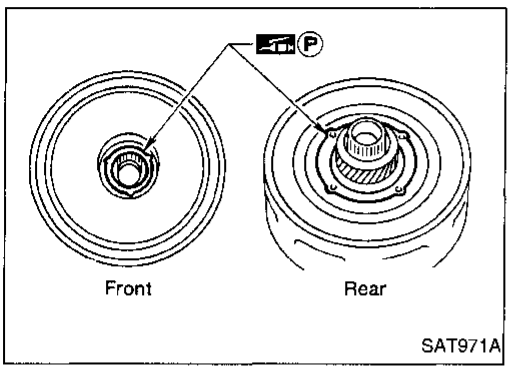

e. Install bearing races on front and rear of clutch pack.
- **Apply petroleum jelly to bearing races.**
- **Securely engage pawls of bearing races with holes in clutch pack.**

f. Place transmission case in vertical position.

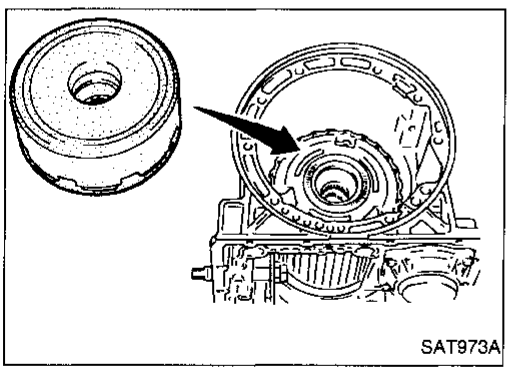

g. Install clutch pack into transmission case.

Adjustment

When any parts listed in the following table are replaced, total end play or reverse clutch end play must be adjusted.

Part name	Item	
	Total end play	Reverse clutch end play
Transmission case	●	●
Low one-way clutch inner race	●	●
Overrun clutch hub	●	●
Rear internal gear	●	●
Rear planetary carrier	●	●
Rear sun gear	●	●
Front planetary carrier	●	●
Front sun gear	●	●
High clutch hub	●	●
High clutch drum	●	●
Oil pump cover	●	●
Reverse clutch drum	—	●

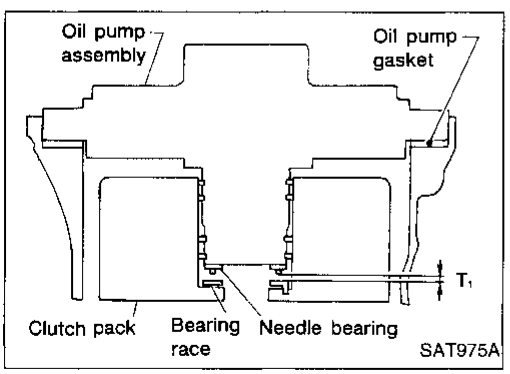

1. Adjust total end play.
   Total end play "T_1":
   0.25 - 0.55 mm (0.0098 - 0.0217 in)

Adjustment (Cont'd)

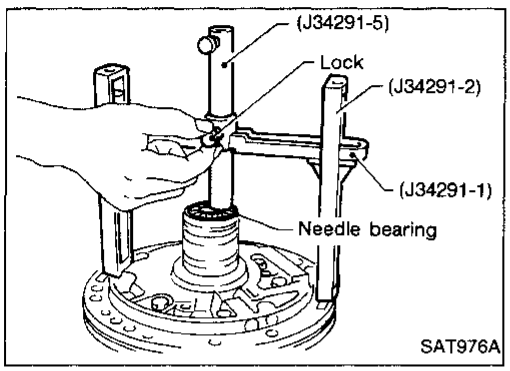

a. With needle bearing installed, place J34291-1 (bridge), J34291-2 (legs) and the J34291-5 (gauging cylinder) onto oil pump. The long ends of legs should be placed firmly on machined surface of oil pump assembly and gauging cylinder should rest on top of the needle bearing. Lock gauging cylinder in place with set screw.

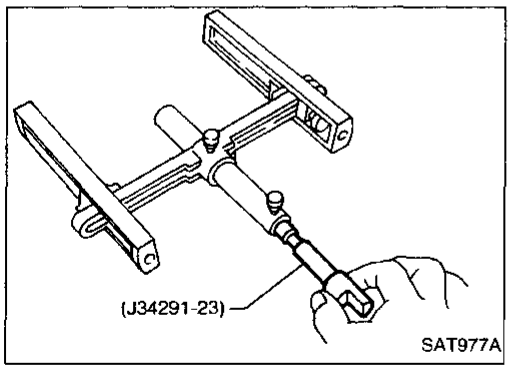

b. Install J34291-23 (gauging plunger) into gauging cylinder.

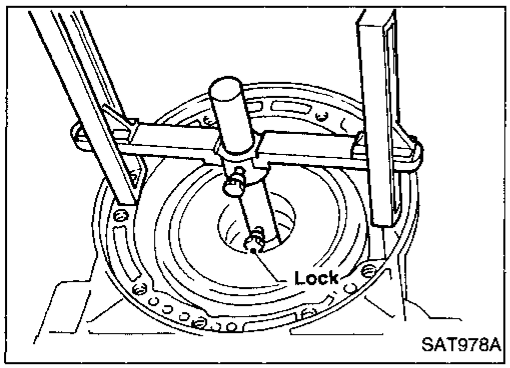

c. With original bearing race installed inside reverse clutch drum, place shim selecting gauge with its legs on machined surface of transmission case (no gasket) and allow gauging plunger to rest on bearing race. Lock gauging plunger in place with set screw.

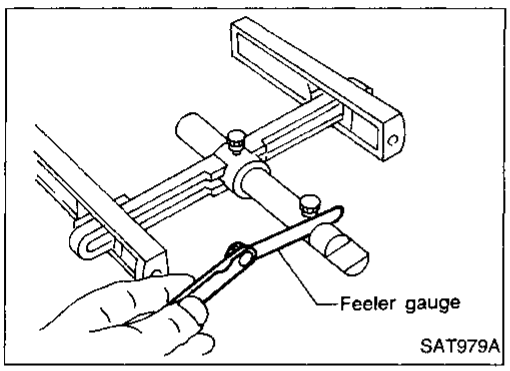

d. Remove Tool and use feeler gauge to measure gap between gauging cylinder and gauging plunger. This measurement should give exact total end play.

Total end play "T_1":
0.25 - 0.55 mm (0.0098 - 0.0217 in)

- If end play is out of specification, decrease or increase thickness of oil pump cover bearing race as necessary.

Available oil pump cover bearing race:
Refer to SDS, AT-116.

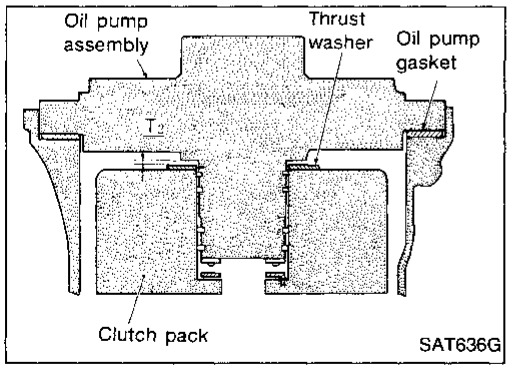

2. Adjust reverse clutch drum end play.

Reverse clutch drum end play "T_2":
0.55 - 0.90 mm (0.0217 - 0.0354 in)

Adjustment (Cont'd)

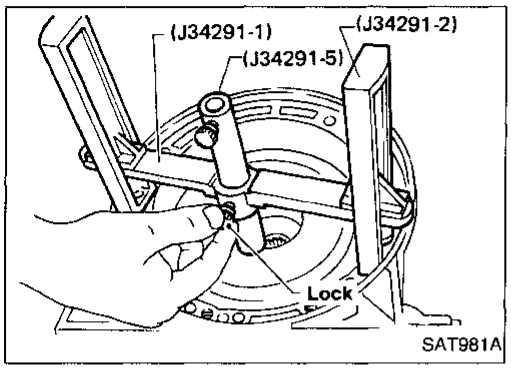

a. Place J34291-1 (bridge), J34291-2 (legs) and J34291-5 (gauging cylinder) on machined surface of transmission case (no gasket) and allow gauging cylinder to rest on front thrust surface of reverse clutch drum. Lock cylinder in place with set screw.

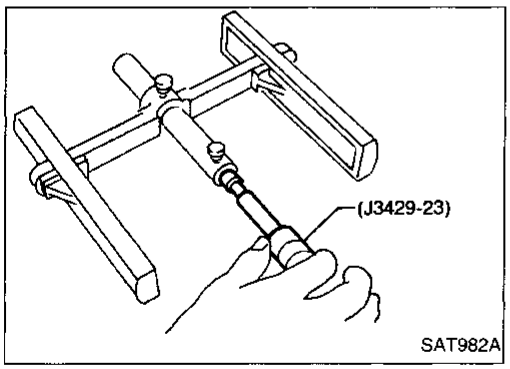

b. Install J34291-23 (gauging plunger) into gauging cylinder.

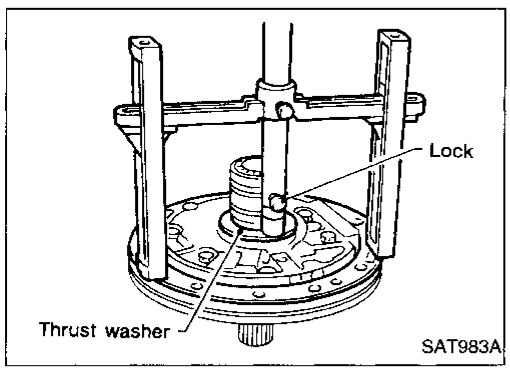

c. With original thrust washer installed on oil pump, place shim setting gauge legs onto machined surface of oil pump assembly and allow gauging plunger to rest on thrust washer. Lock plunger in place with set screw.

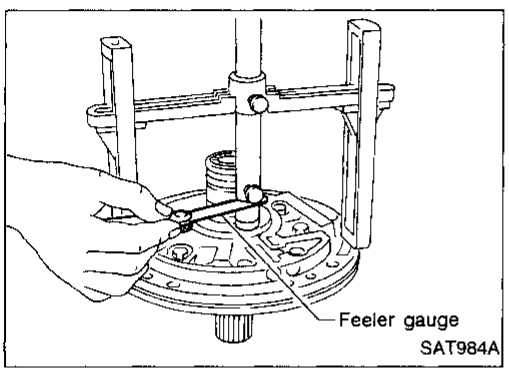

d. Use feeler gauge to measure gap between gauging plunger and gauging cylinder. This measurement should give you exact reverse clutch drum and play.

Reverse clutch drum end play "T_2":
0.55 - 0.90 mm (0.0217 - 0.0354 in)

- If end play is out of specification, decrease or increase thickness of oil pump thrust washer as necessary.

Available oil pump thrust washer:
Refer to SDS, AT-116.

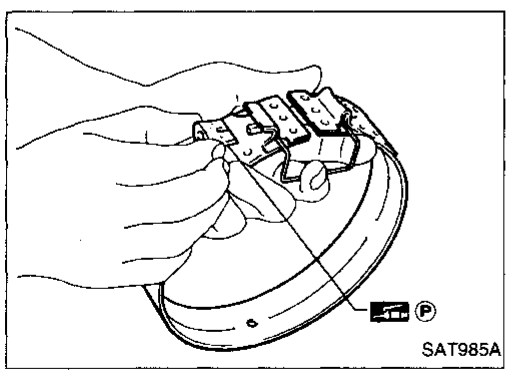

Assembly (2)

1. Place transmission case into horizontal position.
2. Install brake band and band strut.

a. Install band strut on brake band.

- **Apply petroleum jelly to band strut.**

Assembly (2) (Cont'd)

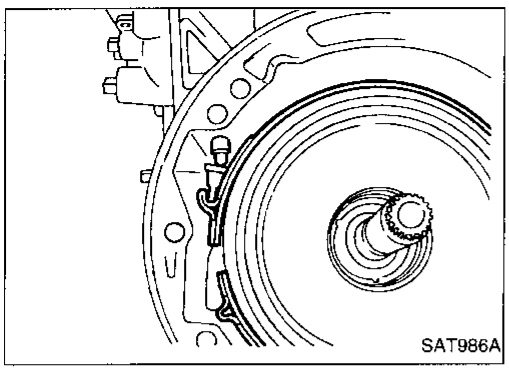

b. Place brake band around reverse clutch drum, and insert band strut into end of band servo piston stem.

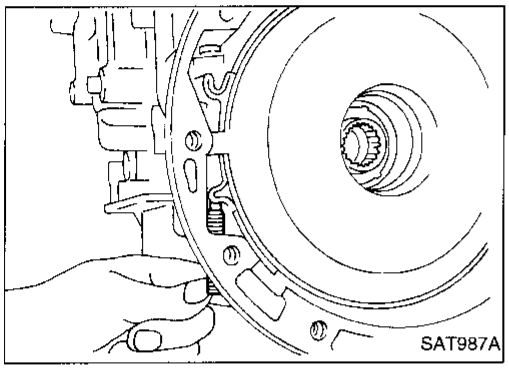

c. Install anchor end bolt on transmission case. Then, tighten anchor end bolt just enough so that reverse clutch drum (clutch pack) will not tilt forward.

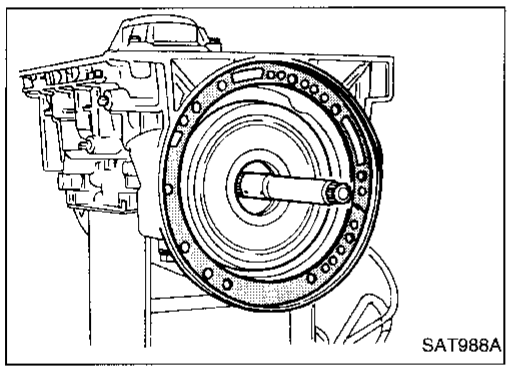

3. Install input shaft on transmission case.
- **Pay attention to its direction — O-ring groove side is front.**
4. Install gasket on transmission case.

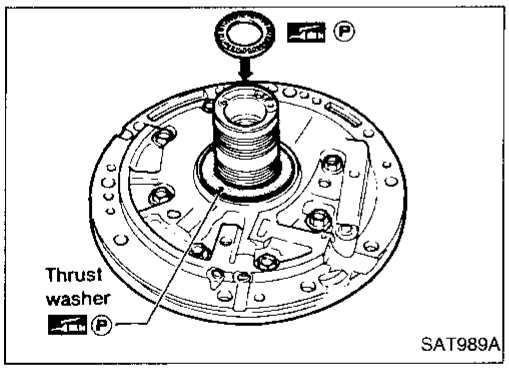

5. Install oil pump assembly.
a. Install needle bearing on oil pump assembly.
- **Apply petroleum jelly to the needle bearing.**

b. Install selected thrust washer on oil pump assembly.
- **Apply petroleum jelly to thrust washer.**

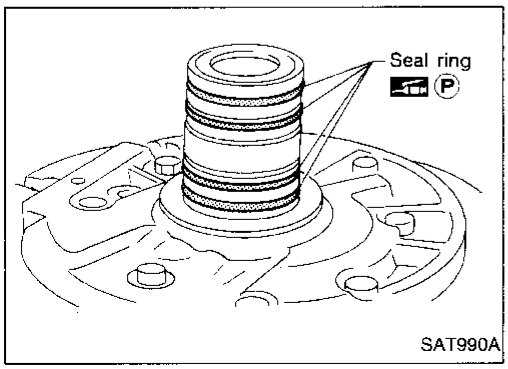

c. Carefully install seal rings into grooves and press them into the petroleum jelly so that they are a tight fit.

Assembly (2) (Cont'd)

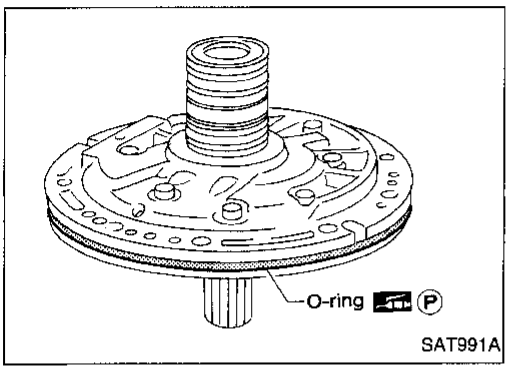

d. Install O-ring on oil pump assembly.
- **Apply petroleum jelly to O-ring.**

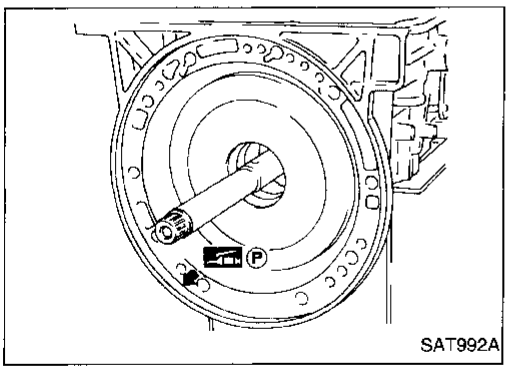

e. Apply petroleum jelly to mating surface of transmission case and oil pump assembly.

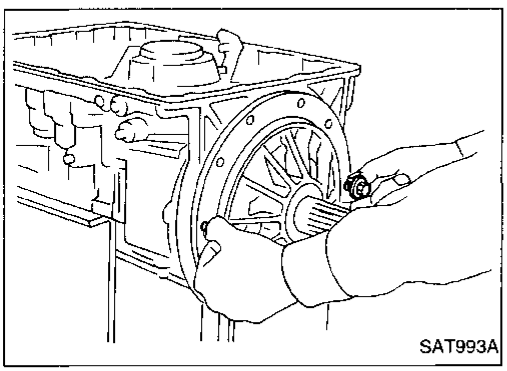

f. Install oil pump assembly.
- **Install two converter housing securing bolts in bolt holes in oil pump assembly as guides.**

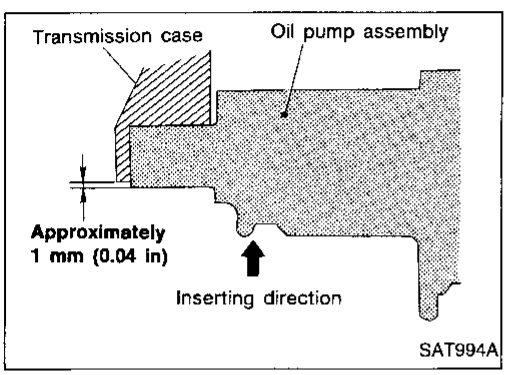

- **Insert oil pump assembly to the specified position in transmission, as shown at left.**

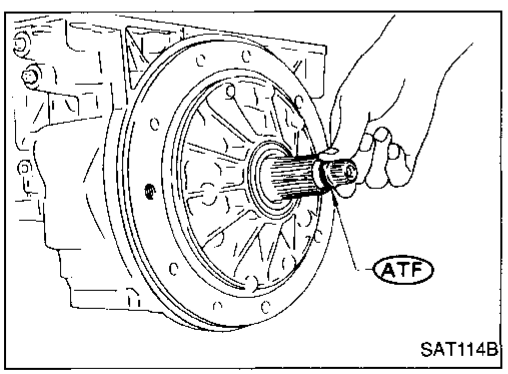

6. Install O-ring on input shaft.
- **Apply ATF to O-rings.**

Assembly (2) (Cont'd)

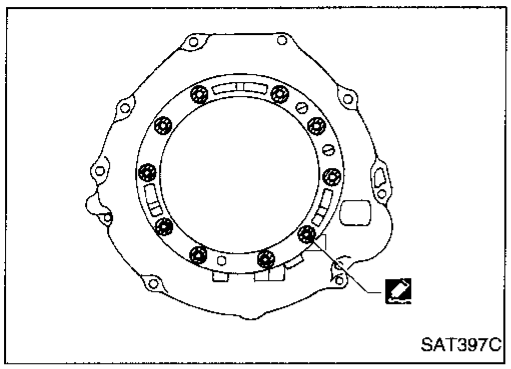

7. Install converter housing.
a. Apply anaerobic liquid gasket Loctite P/N 51813 or equivalent around bolt holes in converter housing.
- **Do not apply too much sealant.**

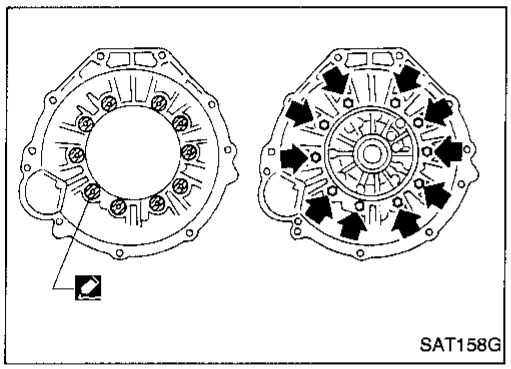

b. Apply anaerobic liquid gasket Locite P/N 51813 or equivalent to seating surfaces of bolts that secure front of converter housing.
c. Install converter housing on transmission case.

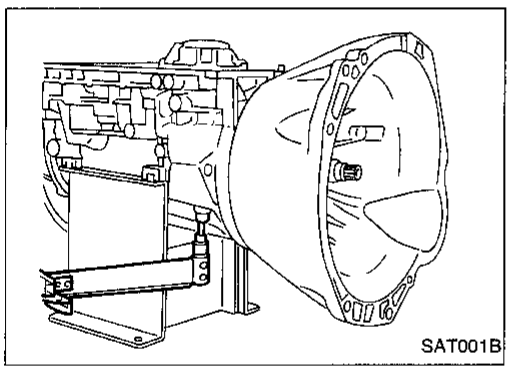

8. Adjust brake band.
a. Tighten anchor end bolt to specified torque.
Anchor end bolt:
: 4 - 6 N·m (0.4 - 0.6 kg-m, 35 - 52 in-lb)
b. Back off anchor end bolt two and a half turns.

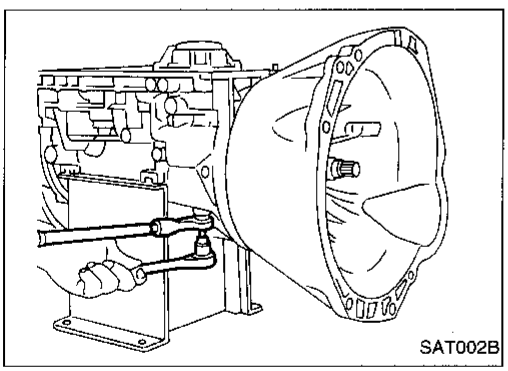

c. While holding anchor end pin, tighten lock nut.

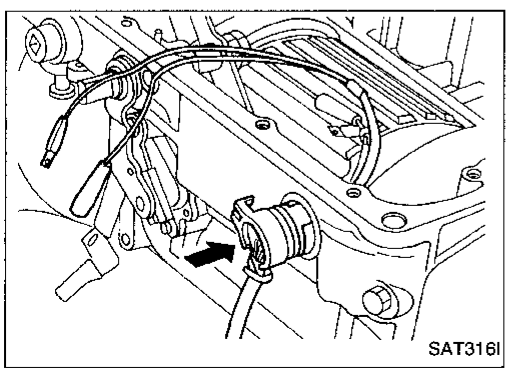

9. Install terminal cord assembly.
a. Install O-ring on terminal cord assembly.
- **Apply petroleum jelly to O-ring.**
b. Compress terminal cord assembly stopper and install terminal cord assembly on transmission case.

Assembly (2) (Cont'd)

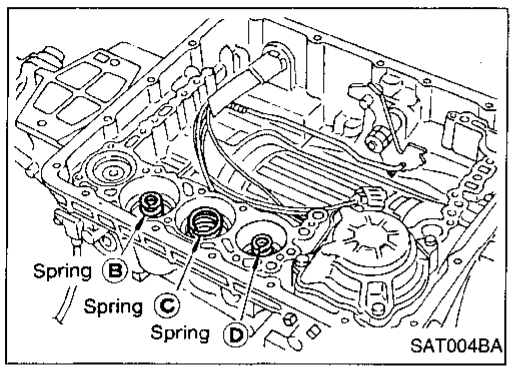

10. Install control valve assembly.
a. Install accumulator piston return springs Ⓑ, Ⓒ and Ⓓ.
Free length of return springs:
Refer to SDS, AT-114.

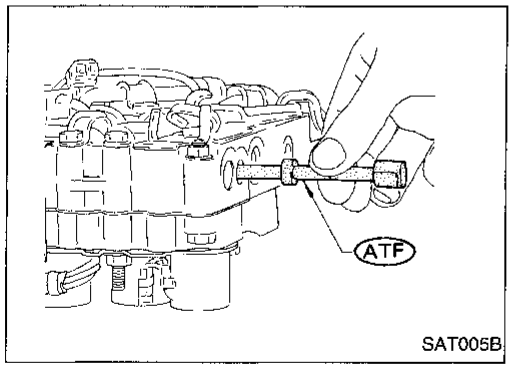

b. Install manual valve on control valve.
- **Apply ATF to manual valve.**

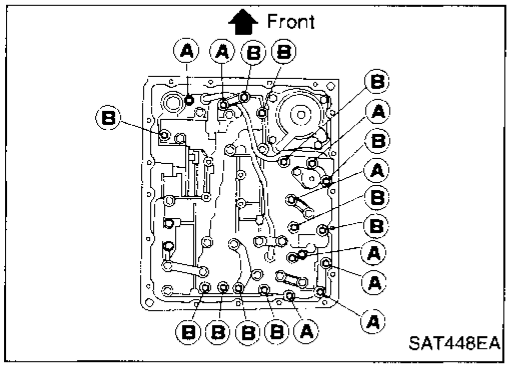

c. Install control valve assembly on transmission case.
d. Install connector tube brackets and tighten bolts Ⓐ and Ⓑ.
- **Check that terminal assembly harness does not catch.**

Bolt	ℓ mm (in) ℓ
Ⓐ	33 (1.30)
Ⓑ	45 (1.77)

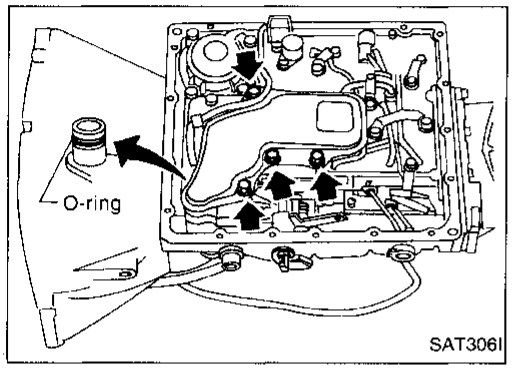

e. Install O-ring on oil strainer.
- **Apply petroleum jelly to O-ring.**

f. Install oil strainer on control valve.

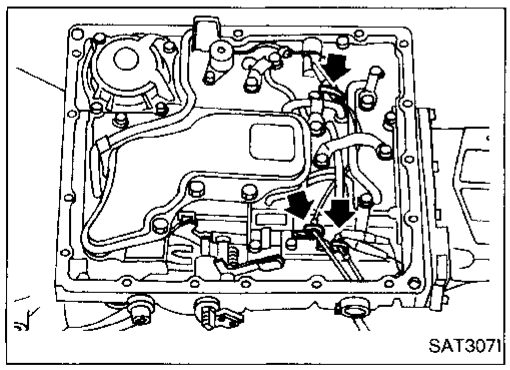

g. Securely fasten terminal harness with clips.

Assembly (2) (Cont'd)

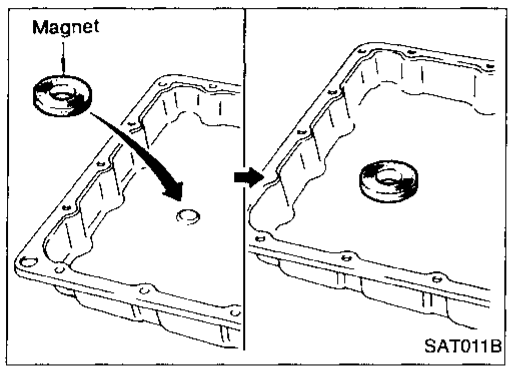

11. Install oil pan.
a. Attach a magnet to oil pan.

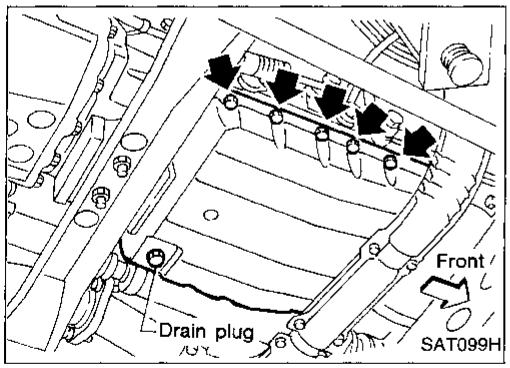

b. Install new oil pan gasket on transmission case.
c. Install oil pan and bracket on transmission case.
- **Always replace oil pan bolts; they are self-sealing bolts.**
- **Before installing bolts, remove traces of sealant and oil from mating surface and thread holes.**
- **Tighten four bolts in a criss-cross pattern to prevent dislocation of gasket.**

d. Tighten drain plug.

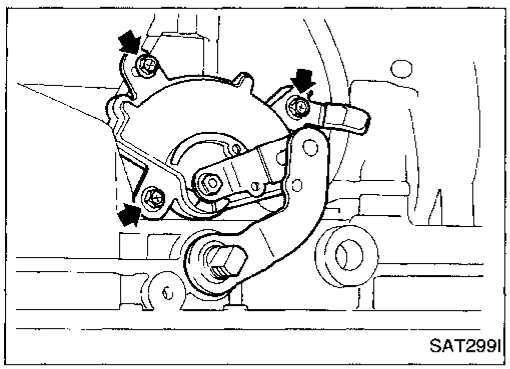

12. Install inhibitor switch.
a. Check that manual shaft is in "1" position.
b. Temporarily install inhibitor switch on manual shaft.
c. Move manual shaft to "N".

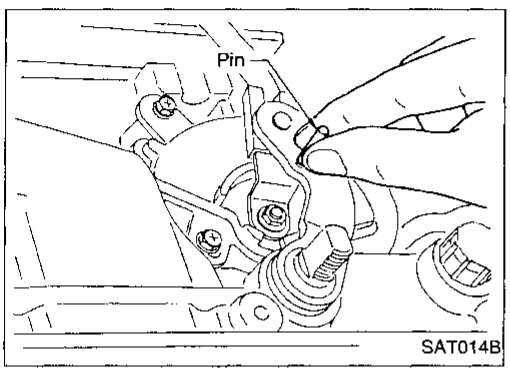

d. Use a 4 mm (0.157 in) pin for this adjustment.
1) Insert the pin straight into the manual shaft adjustment hole.
2) Rotate inhibitor switch until the pin can also be inserted straight into hole in inhibitor switch.
e. Tighten inhibitor switch fixing bolts.
f. Remove pin from adjustment hole after adjusting inhibitor switch.

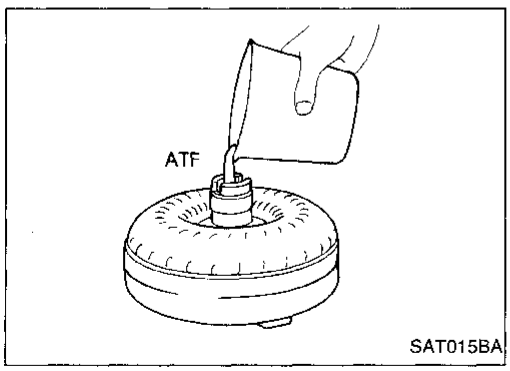

13. Install torque converter.
a. Pour ATF into torque converter.
- **Approximately 2 liters (2-1/8 US qt, 1-3/4 Imp qt) of fluid are required for a new torque converter.**
- **When reusing old torque converter, add the same amount of fluid as was drained.**

Assembly (2) (Cont'd)

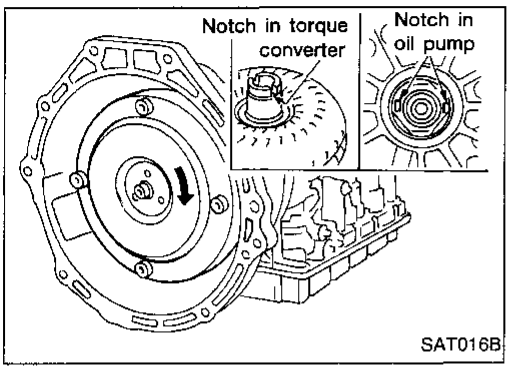

b. Install torque converter while aligning notches and oil pump.

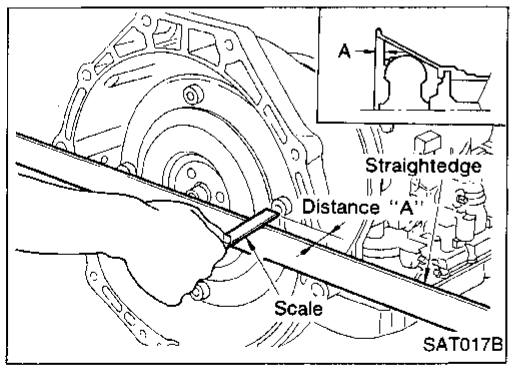

c. Measure distance A to check that torque converter is in proper position.

Distance "A":

26.0 mm (1.024 in) or more

General Specifications

Automatic transmission model	RL4R01A
Transmission model code number	49X10
Stall torque ratio	2.0 : 1
Transmission gear ratio	
1st	2.785
2nd	1.545
Top	1.000
OD	0.694
Reverse	2.272
Recommended fluid	Nissan Matic "D" (Continental U.S. and Alaska) or Genuine Nissan Automatic Transmission Fluid (Canada)*1
Fluid capacity ℓ (US qt, Imp qt)	7.9 (8-3/8, 7)

*1: Refer to MA section ("Fluids and Lubricants", "RECOMMENDED FLUIDS AND LUBRICANTS").

Specifications and Adjustment

VEHICLE SPEED WHEN SHIFTING GEARS

Throttle position	Vehicle speed km/h (MPH)						
	$D_1 \rightarrow D_2$	$D_2 \rightarrow D_3$	$D_3 \rightarrow D_4$	$D_4 \rightarrow D_3$	$D_3 \rightarrow D_2$	$D_2 \rightarrow D_1$	$1_2 \rightarrow 1_1$
Full throttle	53 - 57 (33 - 35)	100 - 108 (62 - 67)	—	147 - 157 (91 - 98)	91 - 99 (57 - 62)	47 - 51 (29 - 32)	41 - 45 (25 - 28)
Half throttle	32 - 36 (20 - 22)	57 - 65 (35 - 40)	114 - 124 (71 - 77)	65 - 75 (40 - 47)	28 - 36 (17 - 22)	12 - 16 (7 - 10)	41 - 45 (25 - 28)

VEHICLE SPEED WHEN PERFORMING AND RELEASING LOCK-UP

Throttle position	D_4	
	Vehicle speed km/h (MPH)	
	Lock-up ON	Lock-up OFF
Full throttle	—	—
Half throttle	71 - 79 (44 - 49)	71 - 79 (44 - 49)

STALL REVOLUTION

Stall revolution	rpm	2,100 - 2,300

LINE PRESSURE

Engine speed rpm	Line pressure kPa (kg/cm^2, psi)	
	D, 2 and 1 positions	R position
Idle	422 - 461 (4.3 - 4.7, 61 - 67)	667 - 706 (6.8 - 7.2, 97 - 102)
Stall	883 - 961 (9.0 - 9.8, 128 - 139)	1,393 - 1,471 (14.2 - 15.0, 202 - 213)

RETURN SPRINGS

Unit: mm (in)

Parts				Item		
				Part No.	Free length	Outer diameter
Control valve	Upper body	①	4th speed cut valve spring	31756-48X09	23.5 (0.925)	7.0 (0.276)
		②	Pressure regulator valve spring	31742-48X16	48.5 (1.909)	12.1 (0.476)
		③	Pressure modifier valve spring	31742-48X13	40.83 (1.6075)	8.0 (0.315)
		④	1-2 shift valve spring	31762-48X00	43.4 (1.709)	6.0 (0.236)
		⑤	2-3 shift valve spring	31762-48X01	42.7 (1.681)	9.0 (0.354)
		⑥	3-4 shift valve spring	31762-48X06	44.03 (1.7335)	8.0 (0.315)
		⑦	Accumulator control valve spring	31742-48X02	29.3 (1.154)	8.0 (0.315)
		—	3-2 downshift valve spring	—	—	—
		⑧	2-3 throttle modifier valve spring	31742-41X21	33.0 (1.299)	6.5 (0.256)
		⑨	4-2 relay valve spring	31756-41X00	29.1 (1.146)	6.95 (0.2736)
		⑩	Torque converter clutch control valve spring	31742-48X07	20.0 (0.787)	5.45 (0.2146)
	Lower body	①	Throttle valve & detent valve spring	31802-48X02	34.23 (1.3476)	11.0 (0.433)
		②	Kickdown modifier valve spring	31756-48X01	45.3 (1.783)	7.0 (0.276)
		③	1st reducing valve spring	31756-48X08	29.7 (1.169)	7.2 (0.283)
		④	Overrun clutch reducing valve spring	31742-48X21	33.2 (1.307)	7.7 (0.303)
		⑤		31742-48X05	31.0 (1.220)	5.2 (0.205)
		⑥	3-2 timing valve spring	31742-48X15	23.0 (0.906)	7.0 (0.276)
		⑦	Torque converter relief valve spring	31742-41X23	38.0 (1.496)	9.0 (0.354)
		⑧	4-2 sequence valve spring	31756-41X00	29.1 (1.146)	6.95 (0.2736)
Governor valve		①	Primary valve spring	31742-48X11	19.1 (0.752)	9.05 (0.3563)
		②	Secondary governor valve I spring	31742-48X09	30.58 (1.2039)	9.2 (0.362)
		③	Secondary governor valve II spring	31742-48X10	16.79 (0.6610)	9.0 (0.354)
Reverse clutch			16 pcs	31505-41X02	19.69 (0.7752)	11.6 (0.457)
High clutch			16 pcs	31505-21X03	22.06 (0.8685)	11.6 (0.457)
Forward clutch (Overrun clutch)			20 pcs	31521-41X00 (Assembly)	35.77 (1.4083)	9.7 (0.382)
Low & reverse brake			18 pcs	31505-41X05	22.3 (0.878)	11.6 (0.457)
Band servo			Spring Ⓐ	31605-41X05	45.6 (1.795)	34.3 (1.350)
			Spring Ⓑ	31605-41X00	53.8 (2.118)	40.3 (1.587)
			Spring Ⓒ	31605-41X01	29.0 (1.169)	27.6 (1.087)
Accumulator			Accumulator Ⓐ	31605-41X02	43.0 (1.693)	18.0 (0.709)
			Accumulator Ⓑ	31605-41X15	66.0 (2.598)	20.8 (0.819)
			Accumulator Ⓒ	31605-41X09	45.0 (1.772)	29.3 (1.154)
			Accumulator Ⓓ	31605-41X06	58.4 (2.299)	17.3 (0.681)

ACCUMULATOR O-RING

Accumulator	Diameter mm (in)			
	Ⓐ	Ⓑ	Ⓒ	Ⓓ
Small diameter end	28.6 (1.13)	31.5 (1.24)	44 (1.73)	28.6 (1.13)
Large diameter end	44 (1.73)	48.8 (1.92)	48.8 (1.92)	44 (1.73)

CLUTCHES AND BRAKES

Code number		49X10	
1. Reverse clutch			
Number of drive plates		2	
Number of driven plates		2	
Thickness of drive plate mm (in)	Standard	1.90 - 2.05 (0.0748 - 0.0807)	
	Wear limit	1.80 (0.0709)	
Clearance mm (in)	Standard	0.5 - 0.8 (0.020 - 0.031)	
	Allowable limit	1.2 (0.047)	
Thickness of retaining plate		Thickness mm (in)	Part number
		4.8 (0.189)	31537-42X02
		5.0 (0.197)	31537-42X03
		5.2 (0.205)	31537-42X04
		5.4 (0.213)	31537-42X05
		5.6 (0.220)	31537-42X06
2. High clutch			
Number of drive plates		5	
Number of driven plates		5	
Thickness of drive plate mm (in)	Standard	1.52 - 1.67 (0.0598 - 0.0657)	
	Wear limit	1.40 (0.0551)	
Clearance mm (in)	Standard	1.8 - 2.2 (0.071 - 0.087)	
	Allowable limit	2.8 (0.110)	
Thickness of retaining plate		Thickness mm (in)	Part number
		3.4 (0.134)	31537-41X71
		3.6 (0.142)	31537-41X61
		3.8 (0.150)	31537-41X62
		4.0 (0.157)	31537-41X63
		4.2 (0.165)	31537-41X64
		4.4 (0.173)	31537-41X65
		4.6 (0.181)	31537-41X66
		4.8 (0.189)	31537-41X67
3. Forward clutch			
Number of drive plates		5	
Number of driven plates		5	
Thickness of drive plate mm (in)	Standard	1.52 - 1.67 (0.0598 - 0.0657)	
	Wear limit	1.40 (0.0551)	
Clearance mm (in)	Standard	0.35 - 0.75 (0.0138 - 0.0295)	
	Allowable limit	1.85 (0.0728)	
Thickness of retaining plate		Thickness mm (in)	Part number
		8.0 (0.315)	31537-41X00
		8.2 (0.323)	31537-41X01
		8.4 (0.331)	31537-41X02
		8.6 (0.339)	31537-41X03
		8.8 (0.346)	31537-41X04
		9.0 (0.354)	31537-41X05
		9.2 (0.362)	31537-41X06

4. Overrun clutch			
Number of drive plates		3	
Number of driven plates		5	
Thickness of drive plate mm (in)	Standard	1.90 - 2.05 (0.0748 - 0.0807)	
	Wear limit	1.80 (0.0709)	
Clearance mm (in)	Standard	1.0 - 1.4 (0.039 - 0.055)	
	Allowable limit	2.0 (0.079)	
Thickness of retaining plate		Thickness mm (in)	Part number
		4.2 (0.165)	31537-41X80
		4.4 (0.173)	31537-41X81
		4.6 (0.181)	31537-41X82
		4.8 (0.189)	31537-41X83
		5.0 (0.197)	31537-41X84
5. Low & reverse brake			
Number of drive plates		6	
Number of driven plates		6	
Thickness of drive plate mm (in)	Standard	1.52 - 1.67 (0.0598 - 0.0657)	
	Wear limit	1.80 (0.0709)	
Clearance mm (in)	Standard	0.8 - 1.1 (0.031 - 0.043)	
	Allowable limit	2.3 (0.091)	
Thickness of retaining plate		Thickness mm (in)	Part number
		7.0 (0.276)	31667-41X12
		7.2 (0.283)	31667-41X13
		7.4 (0.291)	31667-41X14
		7.6 (0.299)	31667-41X07
		7.8 (0.307)	31667-41X08
		8.0 (0.315)	31667-41X00
		8.2 (0.323)	31667-41X01
		8.4 (0.331)	31667-41X02
		8.6 (0.339)	31667-41X03
		8.8 (0.346)	31667-41X04
		9.0 (0.354)	31667-41X05
		9.2 (0.362)	31667-41X06
6. Brake band			
Anchor end bolt tightening torque N·m (kg-m, in-lb)		4 - 6 (0.4 - 0.6, 35 - 52)	
Number of returning revolutions for anchor end bolt		2.5	

Specifications and Adjustment (Cont'd)

OIL PUMP AND LOW ONE-WAY CLUTCH

Oil pump clearance mm (in)	
Cam ring — oil pump housing	
Standard	0.01 - 0.024 (0.0004 - 0.0009)
Rotor, vanes and control piston — oil pump housing	
Standard	0.03 - 0.044 (0.0012 - 0.0017)
Seal ring clearance mm (in)	
Standard	0.10 - 0.25 (0.0039 - 0.0098)
Allowable limit	0.25 (0.0098)

TOTAL END PLAY

Total end play "T_1"	0.25 - 0.55 mm (0.0098 - 0.0217 in)	
	Thickness mm (in)	Part number
Thickness of oil pump cover bearing race	0.8 (0.031)	31435-41X01
	1.0 (0.039)	31435-41X02
	1.2 (0.047)	31435-41X03
	1.4 (0.055)	31435-41X04
	1.6 (0.063)	31435-41X05
	1.8 (0.071)	31435-41X06
	2.0 (0.079)	31435-41X07

PARKING GEAR

Seal ring — ring groove mm (in)	
Standard	0.15 - 0.40 (0.0059 - 0.0157)
Allowable limit	0.40 (0.0157)

REVERSE CLUTCH DRUM END PLAY

Reverse clutch drum end play "T_2"	0.55 - 0.90 mm (0.0217 - 0.0354 in)	
	Thickness mm (in)	Part number
Thickness of oil pump thrust washer	0.9 (0.035)	31528-21X01
	1.1 (0.043)	31528-21X02
	1.3 (0.051)	31528-21X03
	1.5 (0.059)	31528-21X04
	1.7 (0.067)	31528-21X05
	1.9 (0.075)	31528-21X06

REMOVAL AND INSTALLATION

Manual control linkage	
Number of returning revolutions for lock nut	2
Lock nut tightening torque N·m (kg-m, ft-lb)	11 - 15 (1.1 - 1.5, 8 - 11)
Distance between end of clutch housing and torque converter mm (in)	26.0 (1.024) or more

SECTION TF

CONTENTS

PREPARATION 2
Special Service Tools 2
Commercial Service Tools 3
Replacing Oil Seal 4
Center Case Oil Seal 4
Shift Shaft Oil Seal 4
Rear Oil Seal 5
REMOVAL AND INSTALLATION 6
TRANSFER GEAR CONTROL 7
MAJOR OVERHAUL 8
Case Components 8
Gear Components 9
Shift Control Components 10
DISASSEMBLY 11
REPAIR FOR COMPONENT PARTS 15
Mainshaft 15
Front Drive Shaft 17
Counter Gear 18
Main Gear 18
Front Case 20
Shift Shaft Oil Seal 20
Front Case Cover 20
Cover Oil Seal 20
Bearing Retainer 21
Oil Catcher 21
Rear Case 21
Rear Oil Seal 21
Air Breather 21
Shift Control Components 22
ASSEMBLY 23
SERVICE DATA AND SPECIFICATIONS (SDS) 30
General Specifications 30
Inspection and Adjustment 30

Special Service Tools

The actual shapes of Kent-Moore tools may differ from those of special service tools illustrated here.

Tool number (Kent-Moore No.) Tool name	Description	
ST38060002 (J34311) Flange wrench	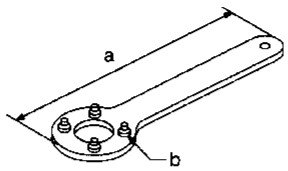 NT428	Removing companion flange nut Installing companion flange nut **a: 480 mm (18.90 in)** **b: Pitch dia.: 75 mm (2.95 in)** **Pin dia.: 10 mm (0.39 in)**
ST30021000 (J22912-01) Puller	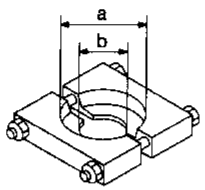 NT411	Removing counter gear front bearing (Use with ST36710010) Removing L & H hub **a: 110 mm (4.33 in) dia.** **b: 68 mm (2.68 in) dia.**
ST30031000 (J22912-01) Puller	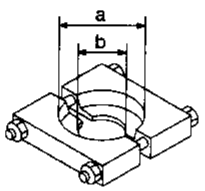 NT411	Removing counter gear rear bearing (Use with ST36710010) **a: 90 mm (3.54 in) dia.** **b: 50 mm (1.97 in) dia.**
ST33290001 (J34286) Puller	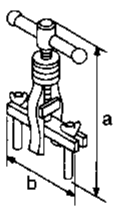 NT414	Removing center case oil seal Removing rear oil seal **a: 250 mm (9.84 in)** **b: 160 mm (6.30 in)**
ST33051001 (J22888) Puller	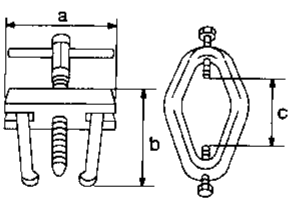 NT429	Removing companion flange **a: 135 mm (5.31 in)** **b: 100 mm (3.94 in)** **c: 130 mm (5.12 in)**
ST30720000 ① (J25273) ② (J25405) Drift	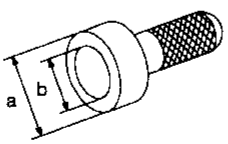 NT115	① Installing center case oil seal ② Installing rear oil seal **a: 77 mm (3.03 in) dia.** **b: 55.5 mm (2.185 in) dia.**
ST36710010 (—) Drift	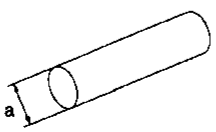 NT063	Removing counter gear front bearing (Use with ST30021000) Removing counter gear rear bearing (Use with ST30031000) **a: 34.5 mm (1.358 in) dia.**

Special Service Tools (Cont'd)

Tool number (Kent-Moore No.) Tool name	Description	
ST33061000 (J8107-2) Drift	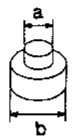 NT116	Removing main gear bearing **a: 28.5 mm (1.122 in) dia.** **b: 38 mm (1.50 in) dia.**
ST30613000 ① (J25742-3) ② (J34339) Drift	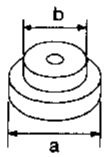 NT073	① Installing main gear bearing ② Installing cover oil seal **a: 72 mm (2.83 in) dia.** **b: 48 mm (1.89 in) dia.**
(J35864) Drift	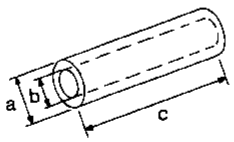 NT117	Installing shift shaft oil seal **a: 26 mm (1.02 in) dia.** **b: 20 mm (0.79 in) dia.** **c: 150 mm (5.91 in)**
(J26092) Drift	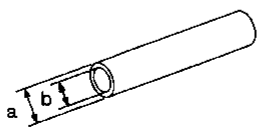 NT065	Seating counter gear assembly **a: 44.5 mm (1.752 in) dia.** **b: 38.5 mm (1.516 in) dia.**
(J34291) Shim setting gauge set	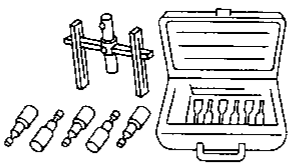 NT101	Selecting counter gear rear bearing shim
(J34291-20) Plunger-shim setting gauge	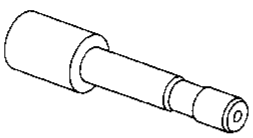 NT118	Selecting counter gear rear bearing shim

Commercial Service Tools

Tool name	Description	
Puller	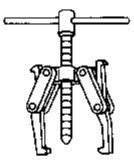 NT077	Removing front drive shaft front bearing Removing front drive shaft rear bearing Removing main gear bearing
Drift	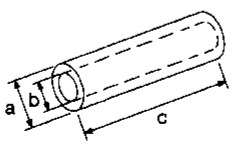 NT117	① Installing mainshaft rear bearing ② Installing L & H hub ① **a: 50 mm (1.97 in) dia.** **b: 42 mm (1.65 in) dia.** **c: 180 mm (7.09 in)** ② **a: 60 mm (2.36 in) dia.** **b: 50 mm (1.97 in) dia.** **c: 60 mm (2.36 in)**

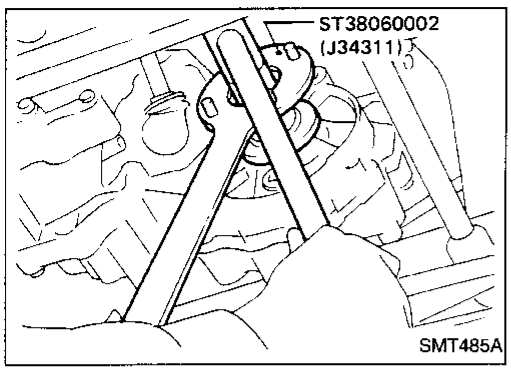

Replacing Oil Seal

CENTER CASE OIL SEAL

1. Remove front propeller shaft. Refer to PD section ("Removal and Installation", " PROPELLER SHAFT").
2. Remove companion flange nut.

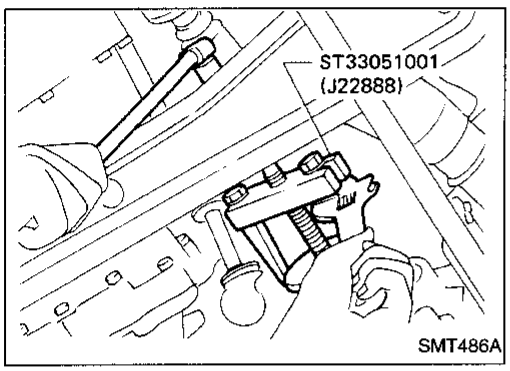

3. Remove companion flange.

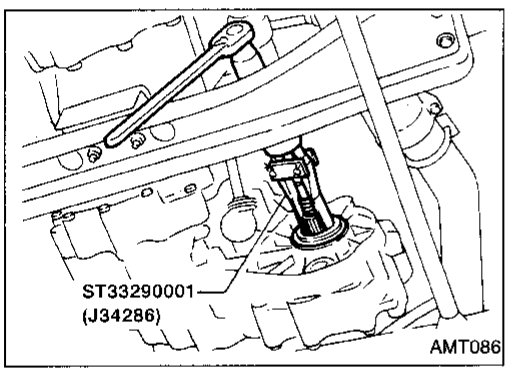

4. Remove center case oil seal.
5. Install center case oil seal.
- **Before installing, apply multi-purpose grease to seal lip.**
6. Install companion flange.

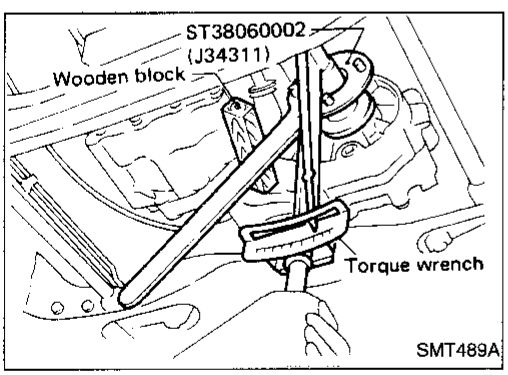

7. Tighten companion flange nut.
   [O]: 226 - 324 N·m (23 - 33 kg-m, 166 - 239 ft-lb)
8. Install front propeller shaft. Refer to PD section ("Removal and Installation", "PROPELLER SHAFT").

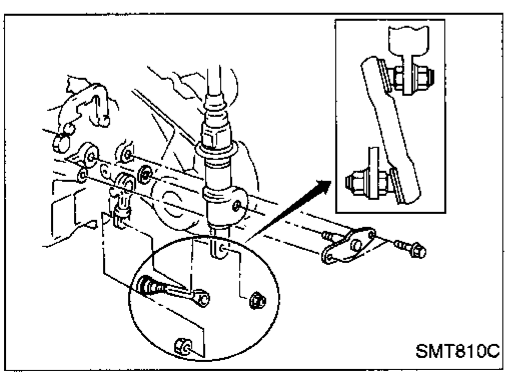

SHIFT SHAFT OIL SEAL

1. Remove front propeller shaft. Refer to PD section ("Removal and Installation", "PROPELLER SHAFT").
2. Remove companion flange. Refer to "CENTER CASE OIL SEAL", TF-4.
3. Remove transfer control lever from transfer outer shift lever. Then remove outer shift lever.

Replacing Oil Seal (Cont'd)

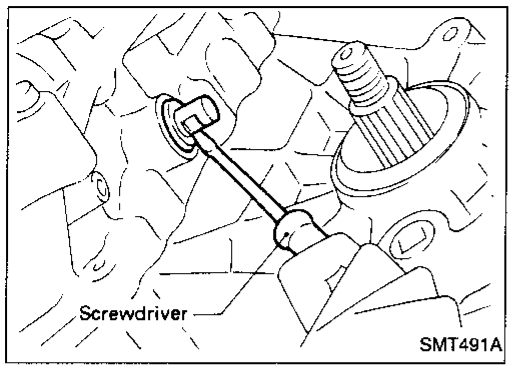

4. Remove shift shaft oil seal.
- **Be careful not to damage cross shaft.**

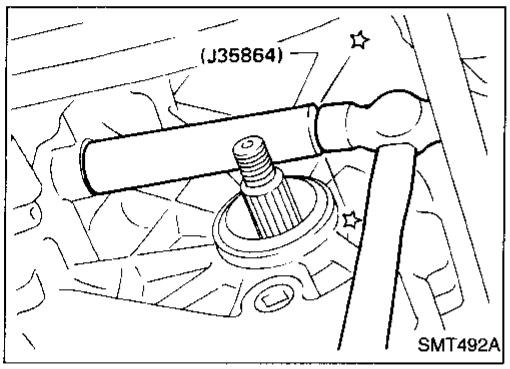

5. Install shift shaft oil seal.
- **Before installing, apply multi-purpose grease to seal lip.**
6. Install transfer control linkage.
7. Install companion flange. Refer to "CENTER CASE OIL SEAL", TF-4.
8. Install front propeller shaft. Refer to PD section ("Removal and Installation", "PROPELLER SHAFT").

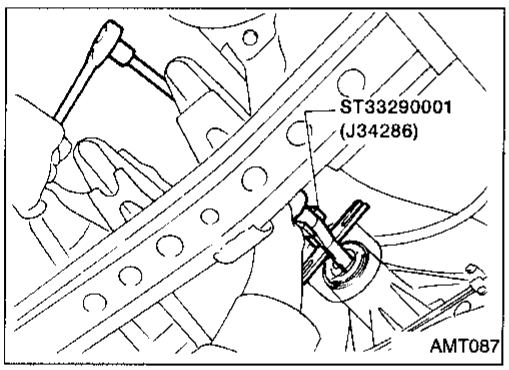

REAR OIL SEAL

1. Remove rear propeller shaft. Refer to PD section ("Removal and Installation", "PROPELLER SHAFT").
2. Remove rear oil seal.

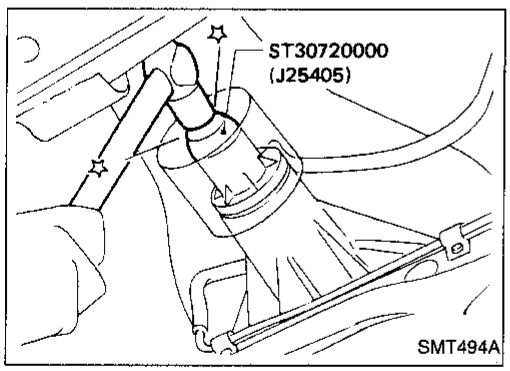

3. Install rear oil seal.
- **Before installing apply multi-purpose grease to seal lip.**
4. Install rear propeller shaft. Refer to PD section ("Removal and Installation", "PROPELLER SHAFT").

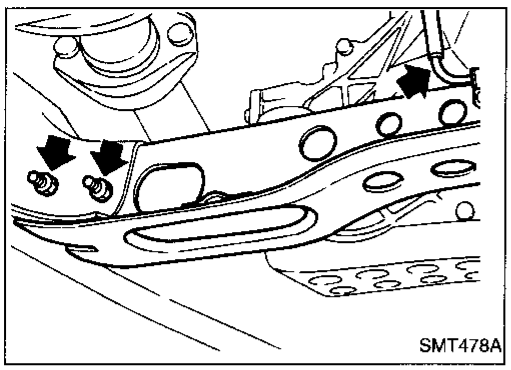

Removal

1. Drain oil from transfer and transmission.
2. Remove front and rear propeller shaft. Refer to PD section ("Removal and Installation", "PROPELLER SHAFT").
   Insert plug into rear oil seal after removing propeller shaft.
- **Be careful not to damage spline, sleeve yoke and rear oil seal, when removing propeller shaft.**
3. Remove torsion bar spring. Refer to FA section ("Torsion Bar Spring", "FRONT SUSPENSION"). Then remove second crossmember.
4. Remove transfer control lever from transfer outer shift lever.
5. Separate transfer from transmission.

WARNING:
Support transfer while removing it.

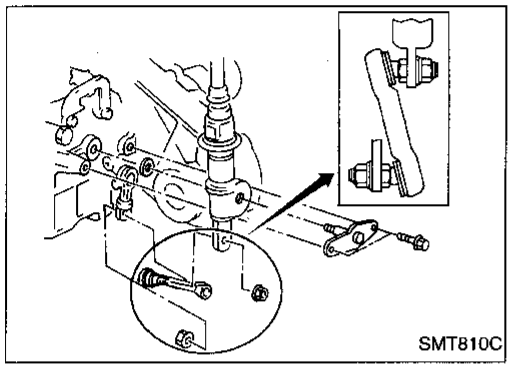

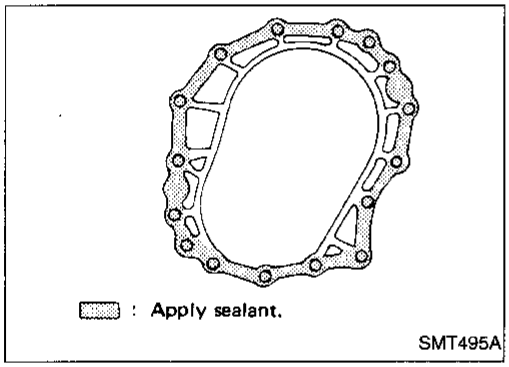

Installation

- Apply recommended sealant to mating surface of transfer case to transmission.
  Recommended sealant:
  Nissan genuine part (KP610-00250) or equivalent

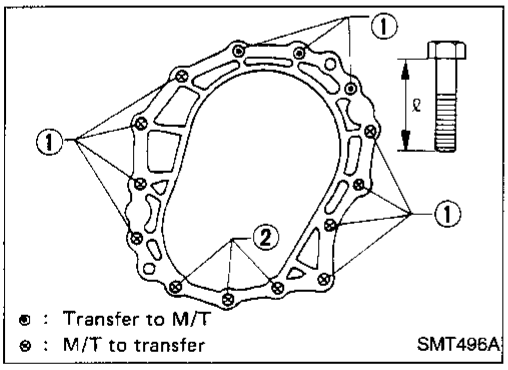

- Tighten bolts securing transfer.

Bolt No.	Tightening torque N·m (kg-m, ft-lb)	ℓ mm (in)
①	31 - 41 (3.2 - 4.2, 23 - 30)	45 (1.77)
②	31 - 41 (3.2 - 4.2, 23 - 30)	60 (2.36)

SEC. 333

: N·m (kg-m, in-lb)

: N·m (kg-m, ft-lb)

1 : Fill multi-purpose grease up.

2 : Apply multi-purpose grease.

*1 : Securely bend pawls during assembly. Be careful not to damage boot.

*2 : Do not touch boot with a sharp-pointed or a hard tool as it breaks easily.

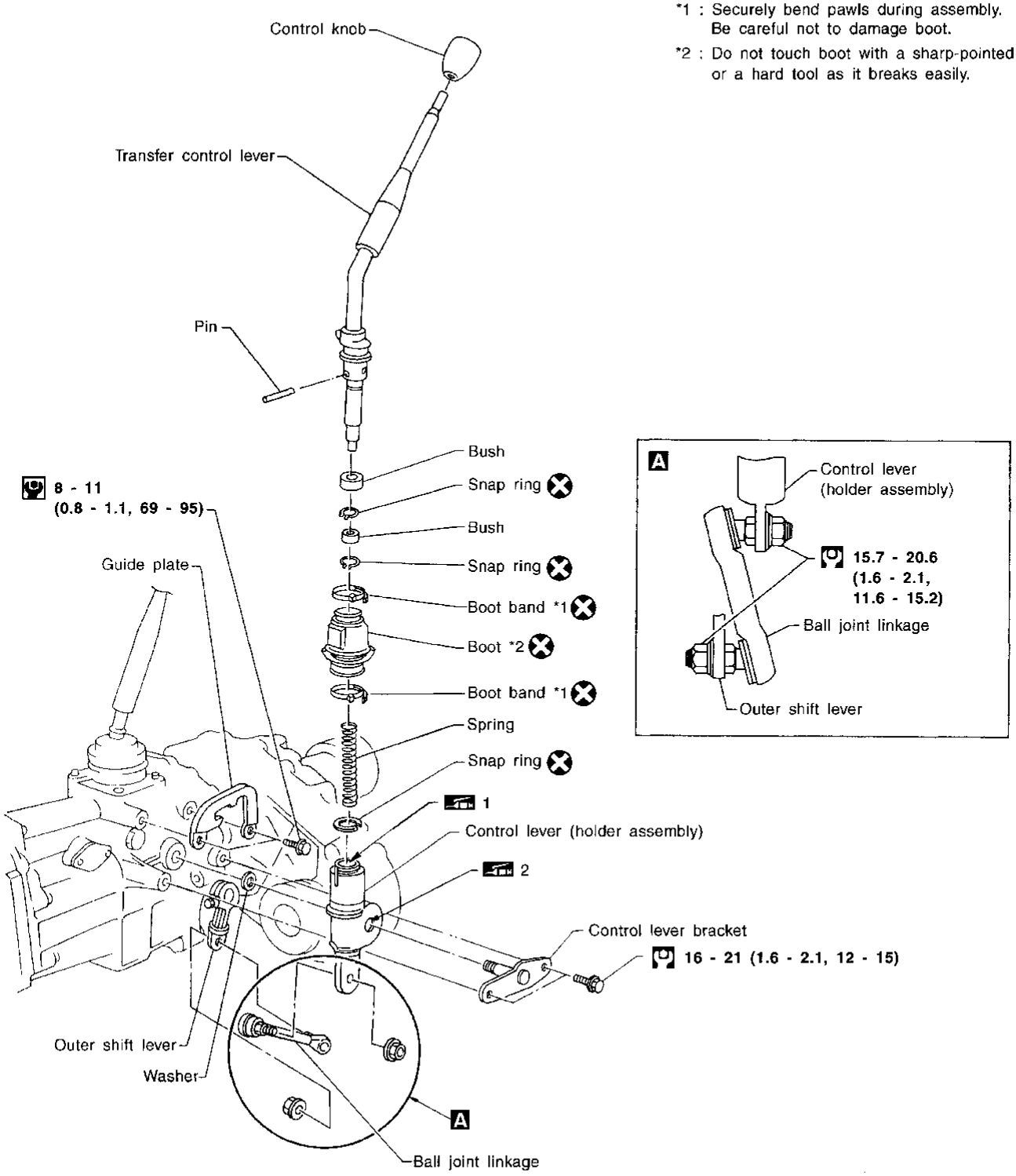

SMT809C

Case Components

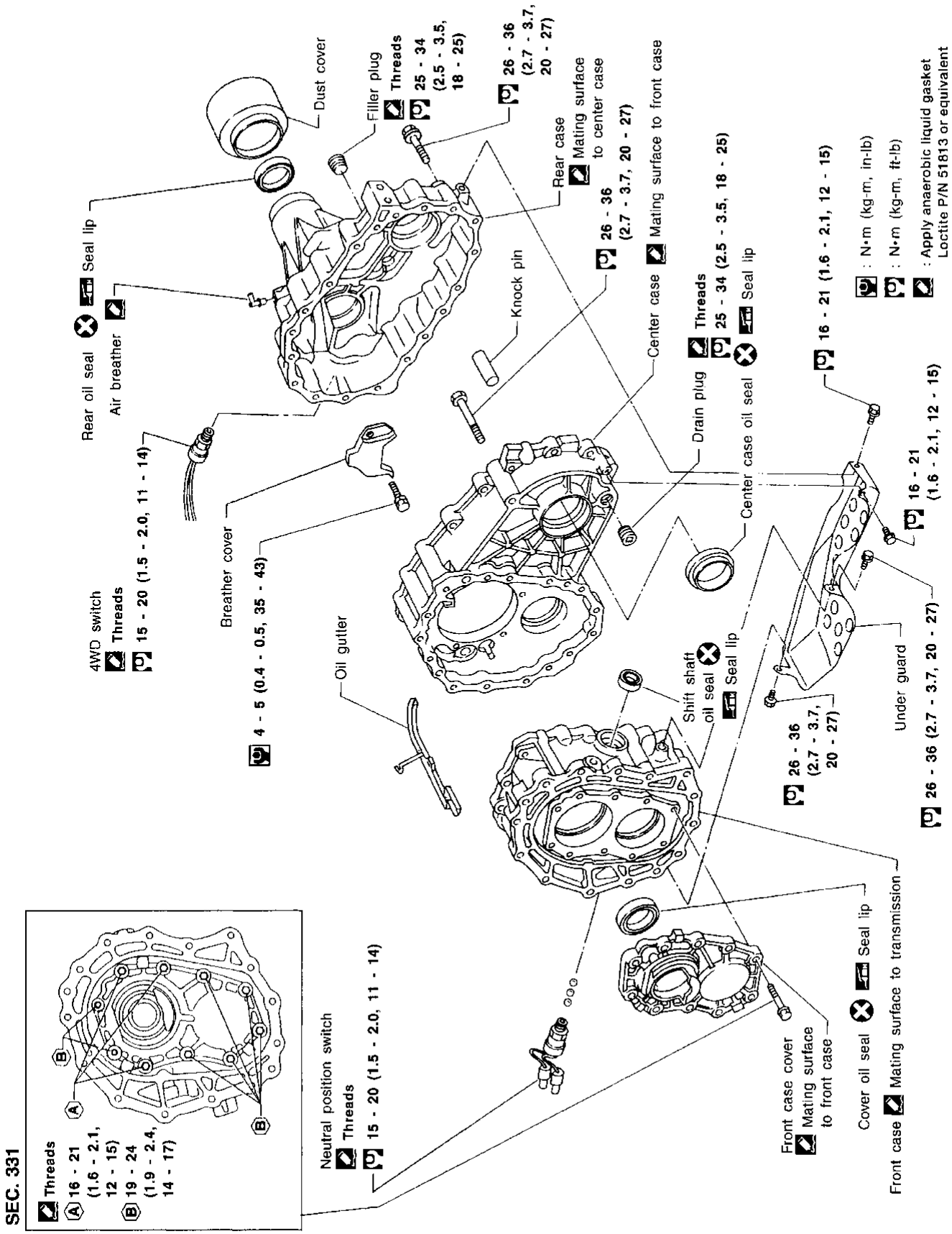

AMT088

Gear Components

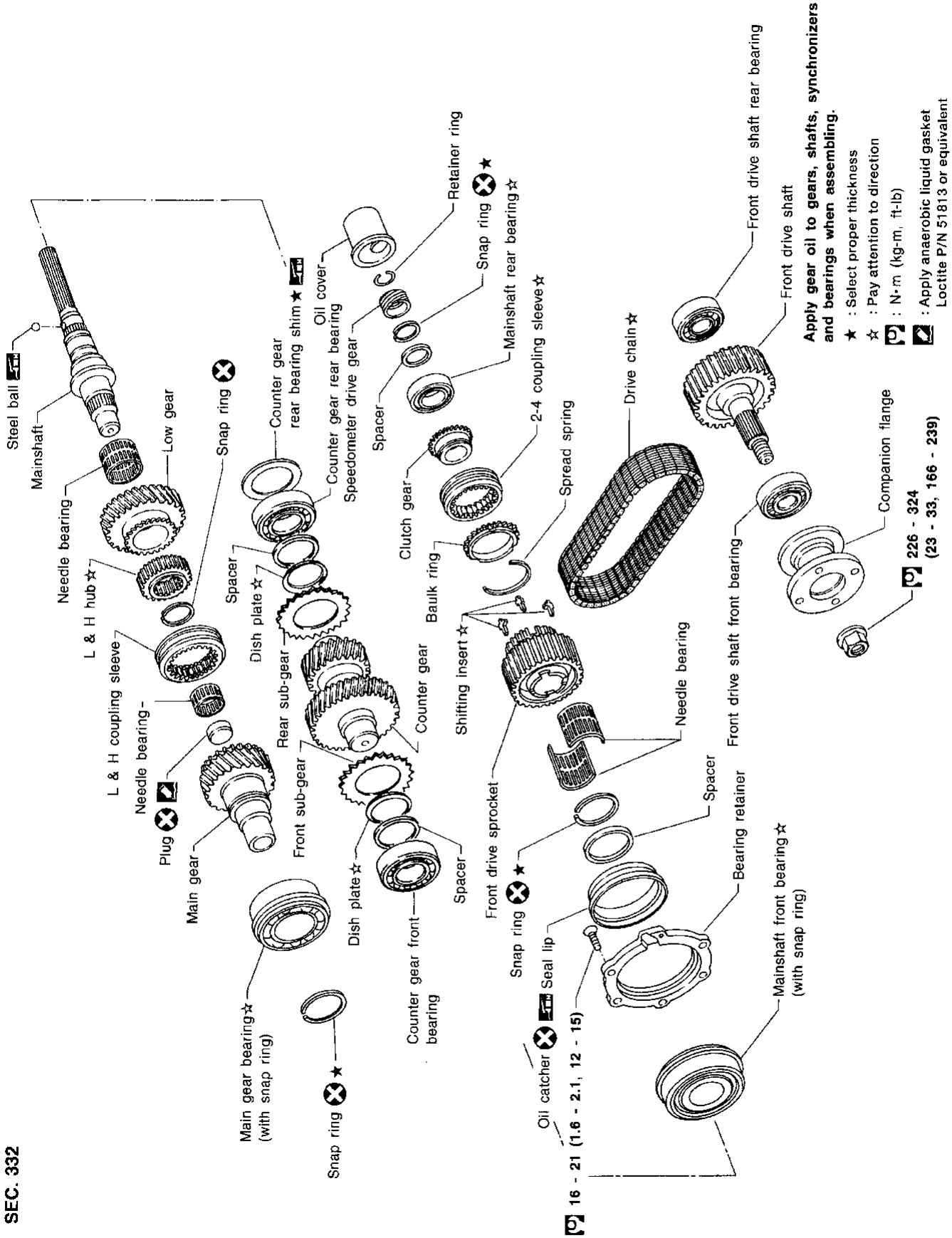

AMT089

Shift Control Components

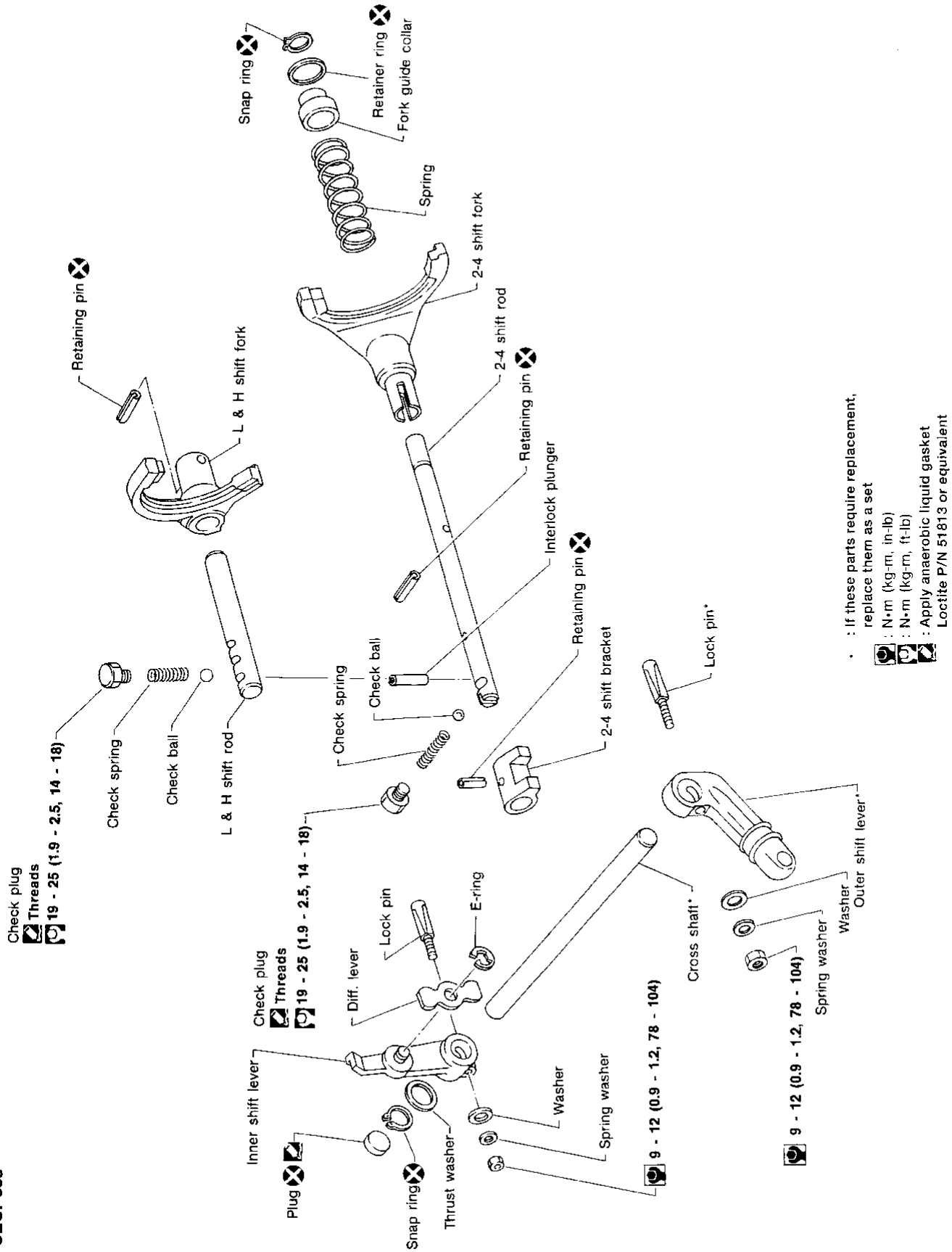

SEC. 333

AMT090

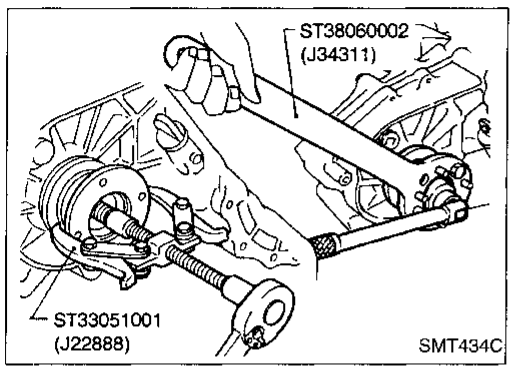

1. Remove companion flange nut.
2. Remove companion flange.

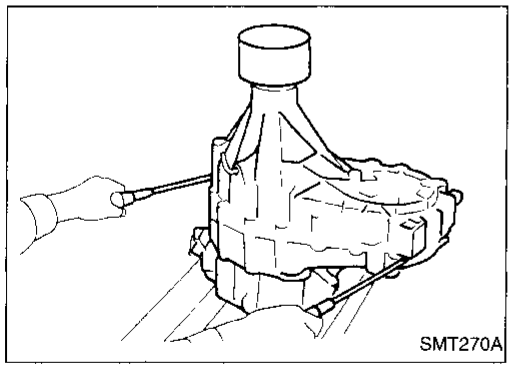

3. Remove 4WD switch.
4. Remove rear case.

- **Be careful not to damage the mating surface.**

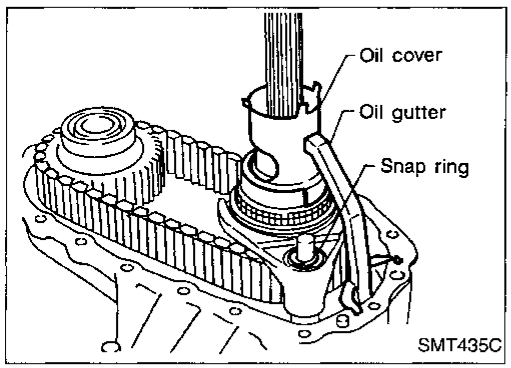

5. Remove oil cover and oil gutter.
6. Remove snap ring from 2-4 shift rod.

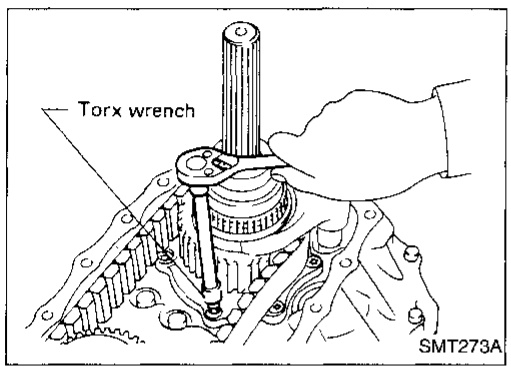

7. Remove bolts securing bearing retainer.

- **This step is necessary to remove mainshaft from center case.**

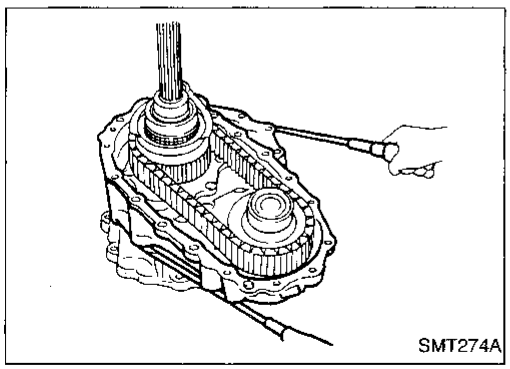

8. Remove bolts securing center case to front case, then separate center case from front case.

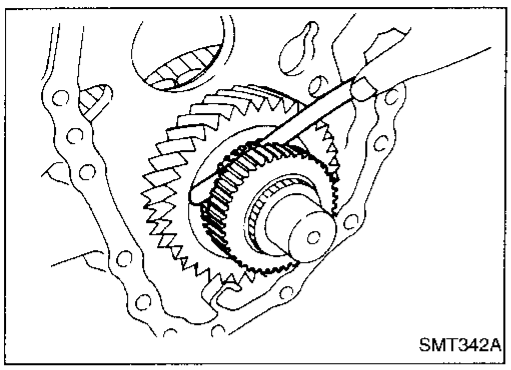

9. Measure low gear end play.
   Standard:
   0.2 - 0.35 mm (0.0079 - 0.0138 in)
- **If end play is not within specification, check low gear and L & H hub for wear.**

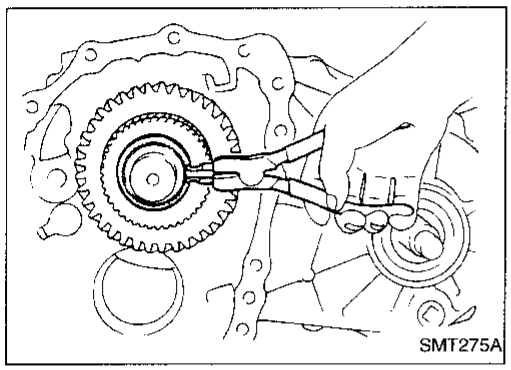

10. Disassemble center case assembly.
a. Remove snap ring from mainshaft.

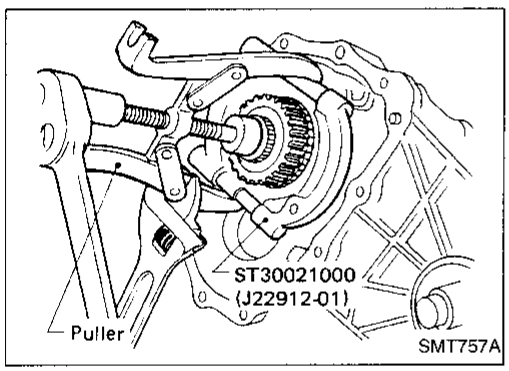

b. Remove low gear with L & H hub.

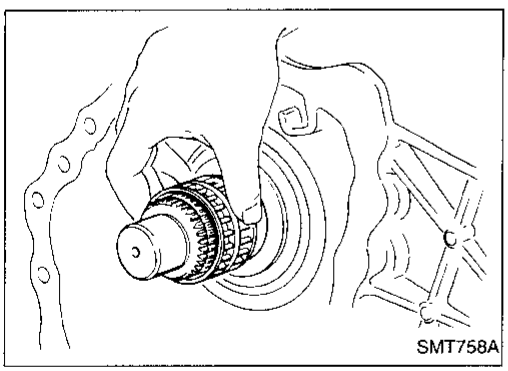

c. Remove needle bearing from main shaft.

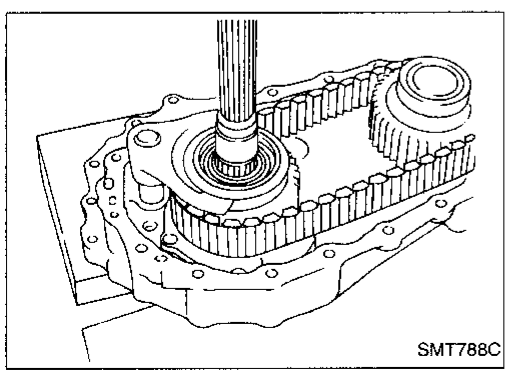

d. Pay attention to the direction of the drive chain before removing it. (It must be reinstalled in the same direction.)

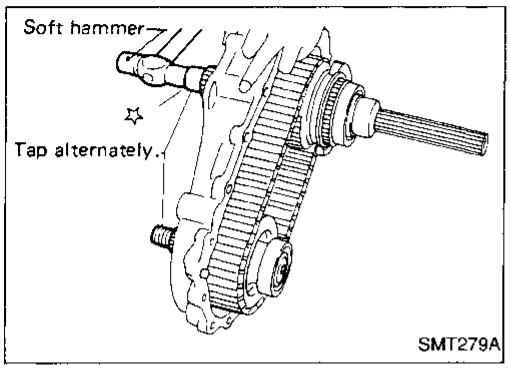

e. Remove mainshaft, front drive and drive chain as a set by tapping front end of mainshaft and front drive shaft alternately.

- **Be careful not to bend drive chain.**

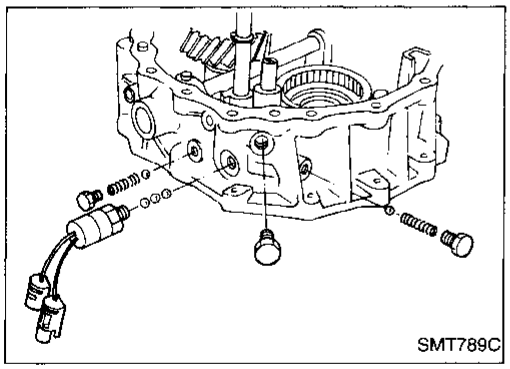

11. Disassemble front case assembly.

a. Remove switch, plugs, check springs and balls.

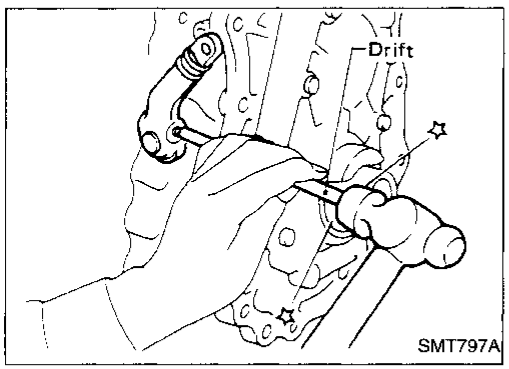

b. Remove lock pin from outer shift lever, then remove outer shift lever.

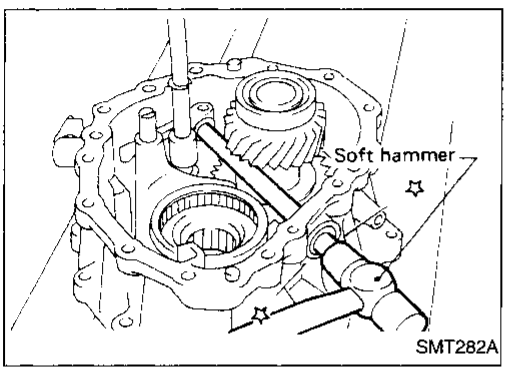

c. Remove lock pin from inner shift lever, then drive out cross shaft and plug together.

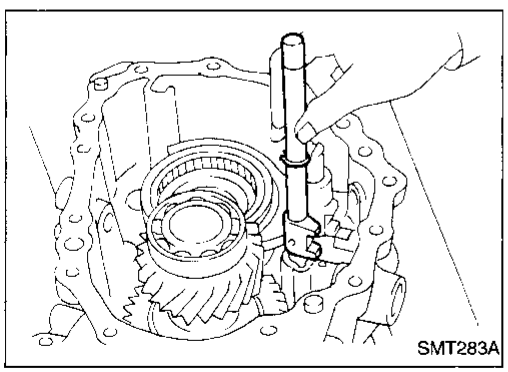

d. Remove 2-4 shift rod.

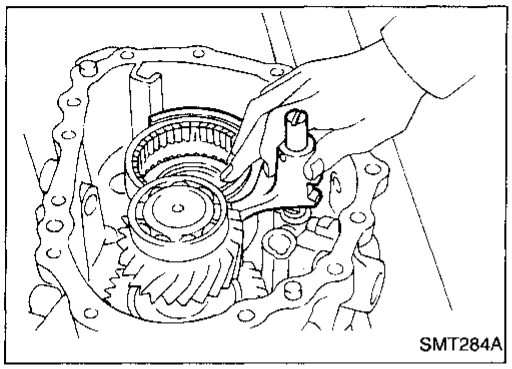

e. Remove L & H shift rod and fork assembly with coupling sleeve.

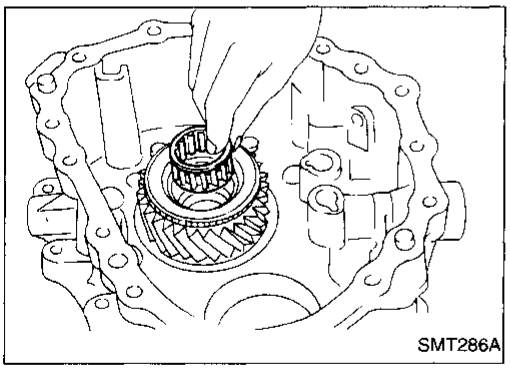

f. Remove needle bearing from main gear.

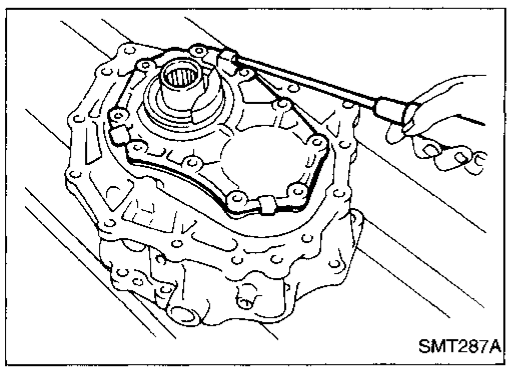

g. Remove bolts securing front case cover, then remove case cover.

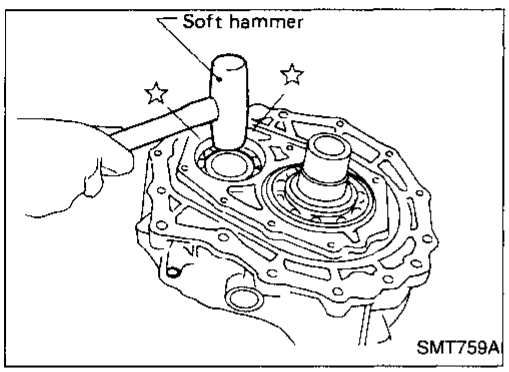

h. Remove counter gear by tapping lightly.

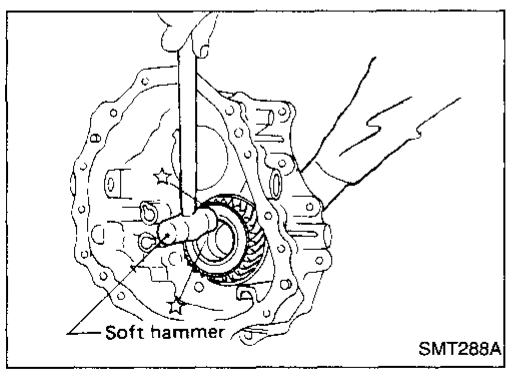

i. Remove main gear by tapping lightly.

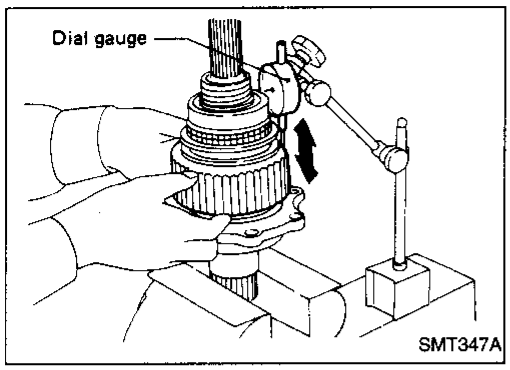

Mainshaft

DISASSEMBLY

1. Check front drive sprocket end play.
   Standard:
   0.2 - 0.35 mm (0.0079 - 0.0138 in)
- **If end play is not within specification, check front drive sprocket and clutch gear for wear.**

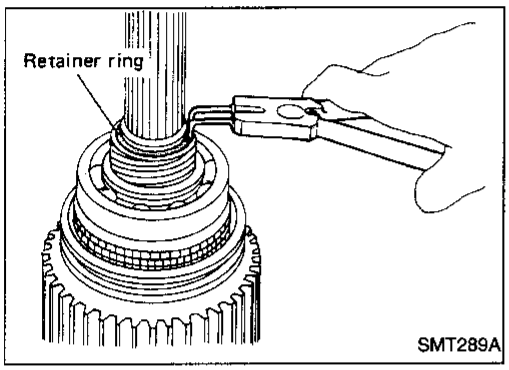

2. Remove retainer ring, speedometer drive gear and steel ball.
- **Be careful not to lose the steel ball.**

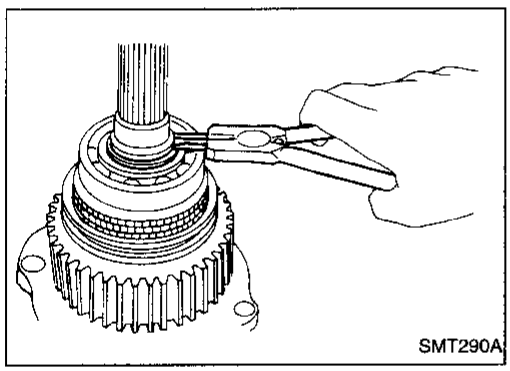

3. Remove snap ring and spacer.

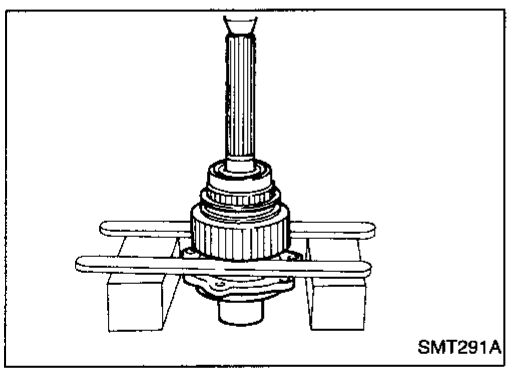

4. Use a press to remove front drive sprocket with mainshaft rear bearing and clutch gear together.
5. Remove needle bearing.

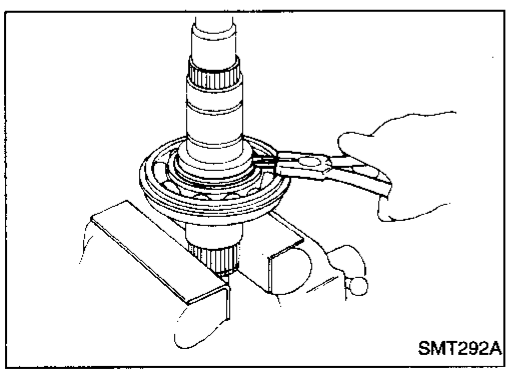

6. Remove bearing retainer, then remove snap ring and spacer.

Mainshaft (Cont'd)

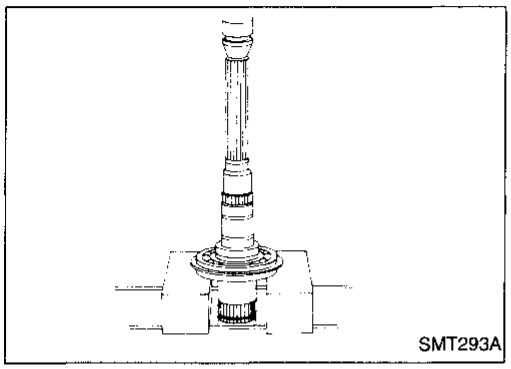
SMT293A

7. Use a press to remove mainshaft front bearing from mainshaft.

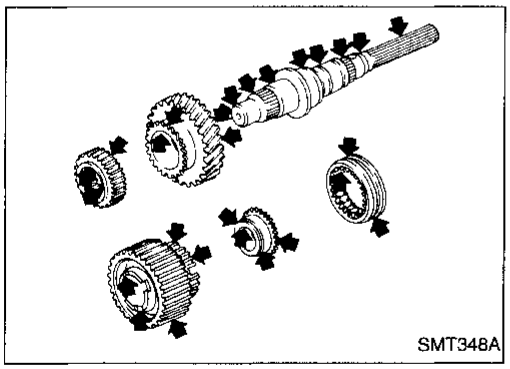
SMT348A

INSPECTION

Gear and shaft

- Check gears for excessive wear, chips or cracks.
- Check shaft for cracks, wear or bending.
- Check coupling sleeve for wear or damage.

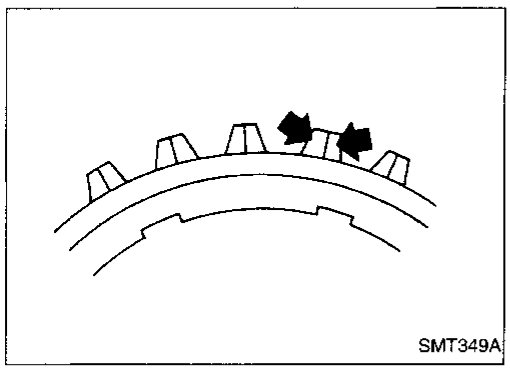
SMT349A

Baulk ring

- Check baulk ring for cracks or deformation.

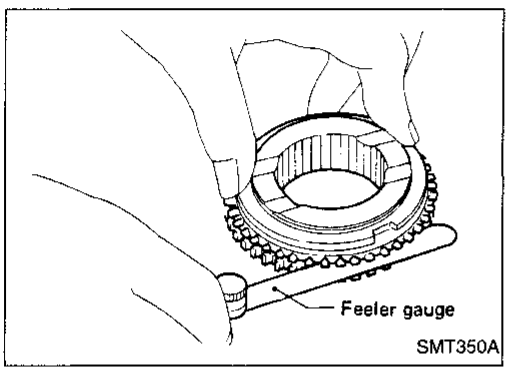

SMT350A

- Measure clearance between baulk ring and clutch gear.
  Baulk ring to clutch gear clearance:
  Refer to SDS, TF-30.

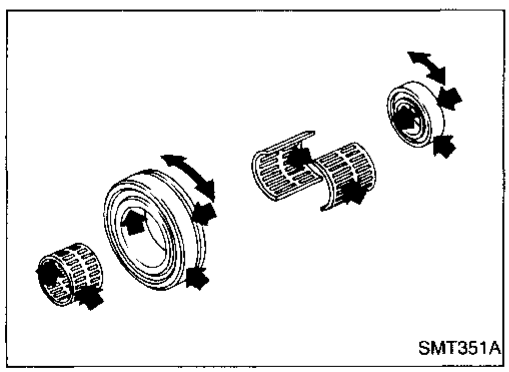
SMT351A

Bearing

- Make sure bearings roll freely and are free from noise, cracks, pitting or wear.

Mainshaft (Cont'd)

ASSEMBLY

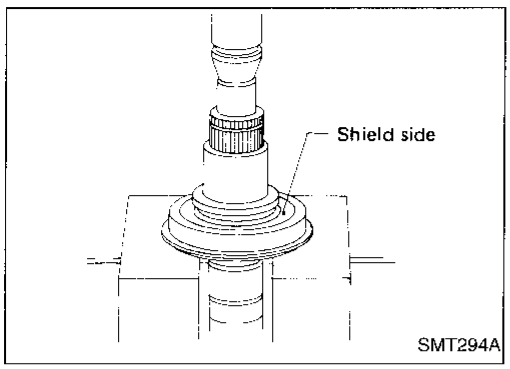

1. Press mainshaft front bearing onto mainshaft.
- **Pay attention to its direction.**

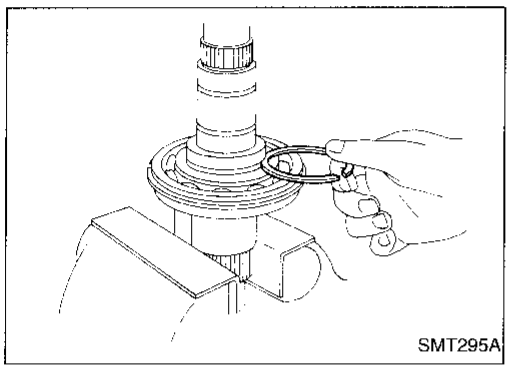

2. Install spacer.
3. Select and install snap ring with proper thickness.
   Allowable clearance between snap ring and groove:
   0 - 0.15 mm (0 - 0.0059 in)
   Available snap ring for mainshaft front bearing:
   Refer to SDS, TF-30.
4. For further procedures, refer to "ASSEMBLY", TF-23.

Front Drive Shaft

DISASSEMBLY

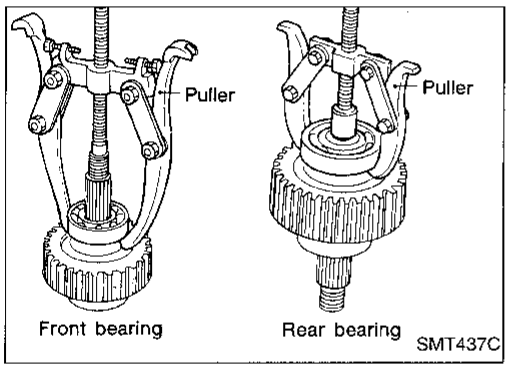

- Using a gear puller, remove front drive shaft front and rear bearings.

INSPECTION

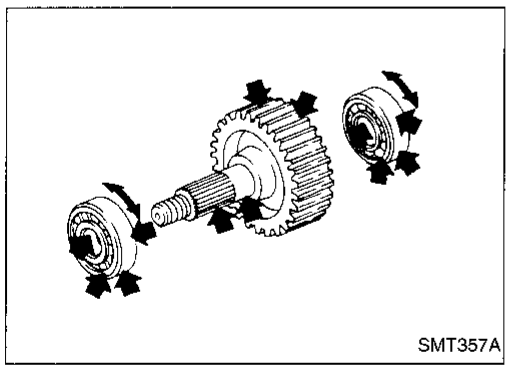

Sprocket and shaft

- Check sprocket for excessive wear, chips or cracks.
- Check shaft for cracks or wear.

Bearing

- Make sure bearings roll freely and are free from noise, cracks, pitting or wear.

ASSEMBLY

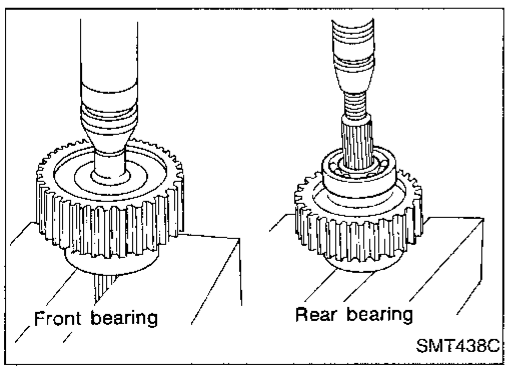

- Press front drive shaft front and rear bearings onto front drive shaft.

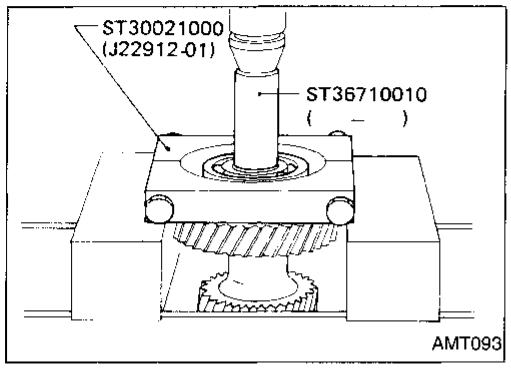

Counter Gear

DISASSEMBLY

1. Use a press to remove counter gear front bearing, then remove front sub-gear, spacer and dish plate.

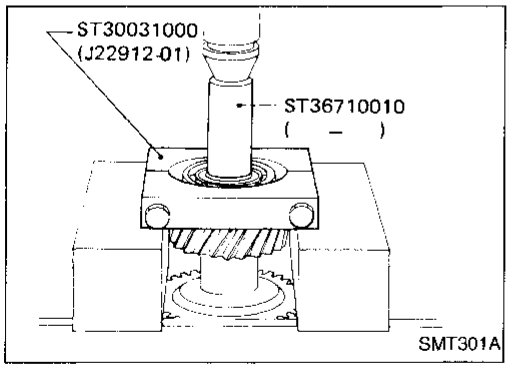

2. Use a press to remove counter gear rear bearing, then remove rear sub-gear, spacer and dish plate.

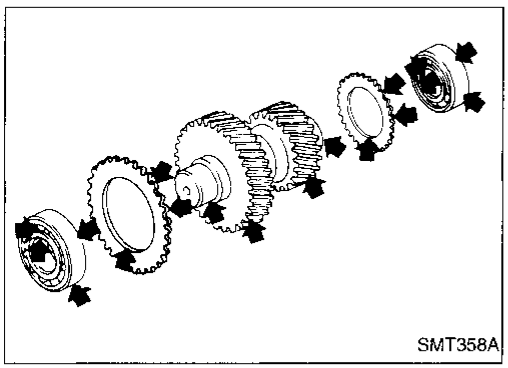

INSPECTION

Gear and shaft

- Check gears for excessive wear, chips or cracks.
- Check shaft for cracks or wear.

Bearing

- Make sure bearings roll freely and are free from noise, cracks, pitting or wear.

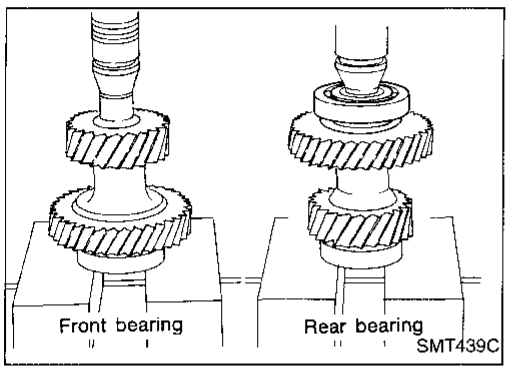

ASSEMBLY

1. Install front sub-gear, dish plate and spacer, then press on counter gear front bearing.
2. Install rear sub-gear, dish plate and spacer, then press on counter gear rear bearing.

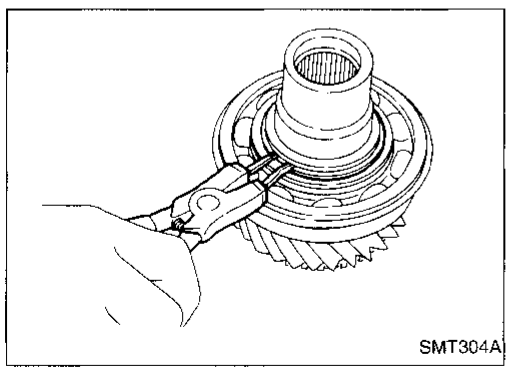

Main Gear

DISASSEMBLY

Main gear bearing

1. Remove snap ring.

Main Gear (Cont'd)

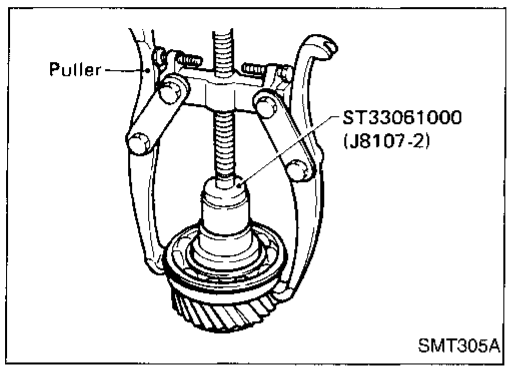

2. Pull out main gear bearing.

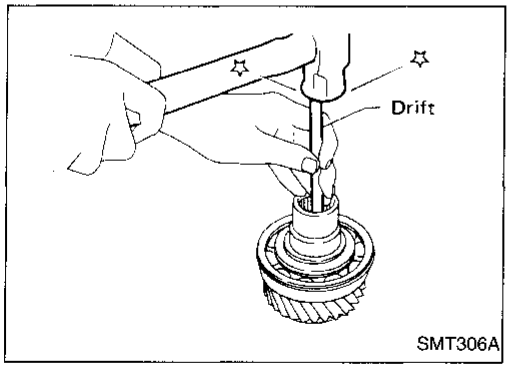

Plug

- **Always replace with a new one whenever it has been removed.**

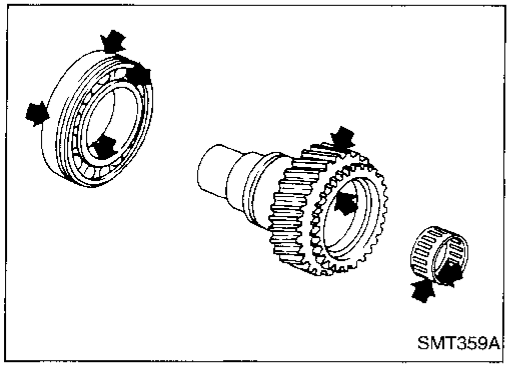

INSPECTION

Gear and shaft

- Check gears for excessive wear, chips or cracks.
- Check shaft for cracks or wear.

Bearing

- Make sure bearings roll freely and are free from noise, cracks, pitting or wear.

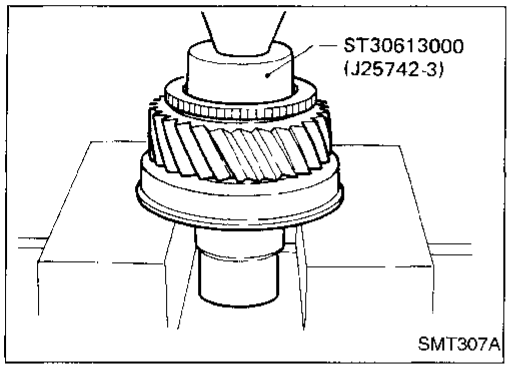

ASSEMBLY

Main gear bearing

1. Press on main gear bearing.

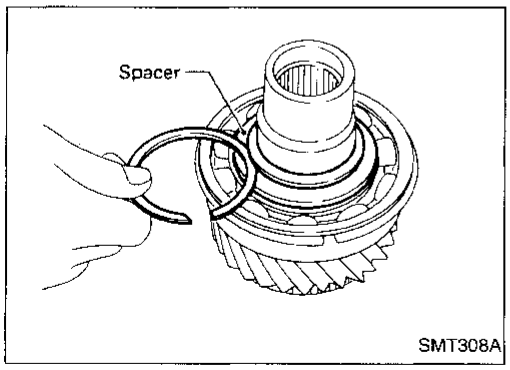

2. Select and install snap ring with proper thickness.
   Allowable clearance between snap ring and groove:
   0 - 0.15 mm (0 - 0.0059 in)
   Available snap ring for main gear bearing:
   Refer to SDS, TF-30.

Main Gear (Cont'd)

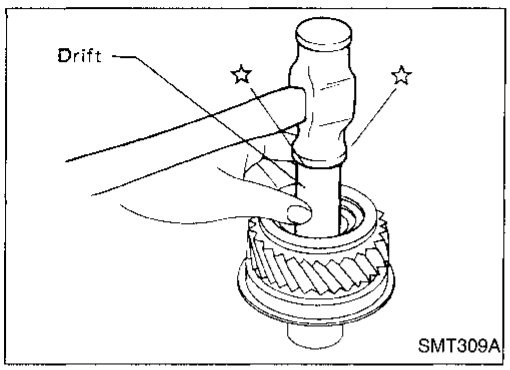

Plug

Apply sealant to plug, then install.

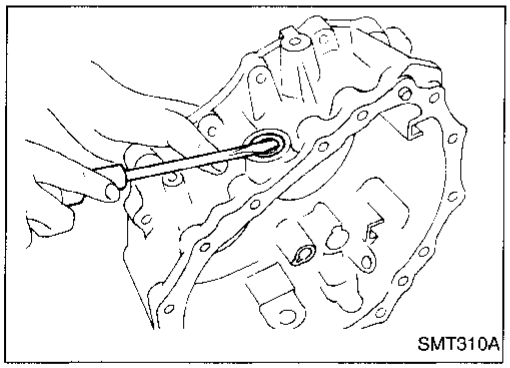

Front Case

SHIFT SHAFT OIL SEAL

Removal

- Use a screwdriver to pry out old seal.
- Be careful not to damage case.
- Always replace with a new one whenever it has been removed.

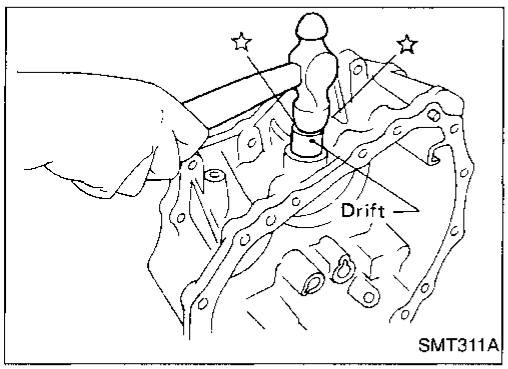

Installation

- Install new shift shaft oil seal until flush with case.
- Before installing, apply multi-purpose grease to seal lip.

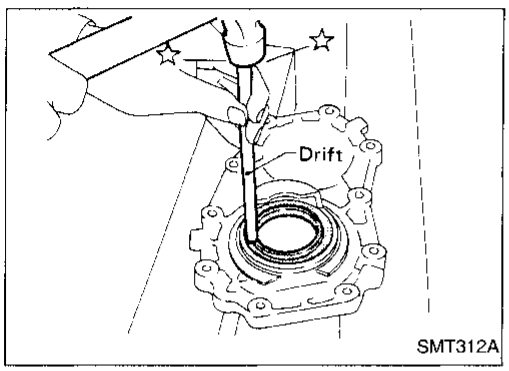

Front Case Cover

COVER OIL SEAL

Removal

- Drive out old seal from inside of front case cover.
- Be careful not to damage front case cover.

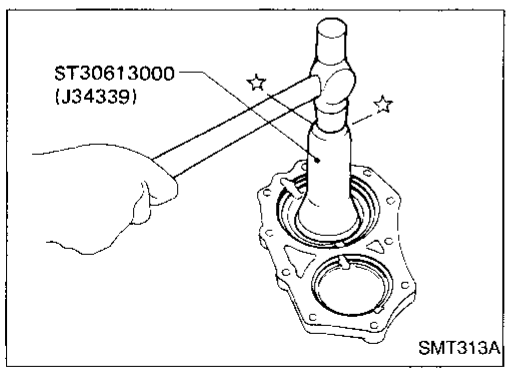

Installation

- Install new front case cover oil seal until it stops.
- Before installing, apply multi-purpose grease to seal lip.

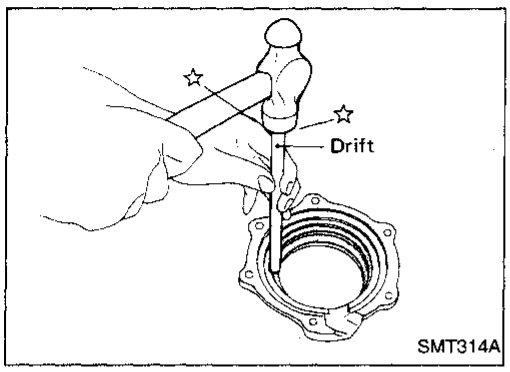

Bearing Retainer

OIL CATCHER

Removal

- Drive out oil catcher from inside of bearing retainer.
- Be careful not to damage bearing retainer.

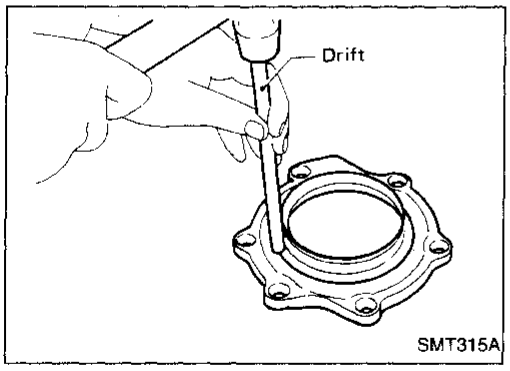

Installation

- Install oil catcher until it stops.
- Be careful not to damage or distort oil catcher or bearing retainer.
- Before installing, apply multi-purpose grease to seal lip.

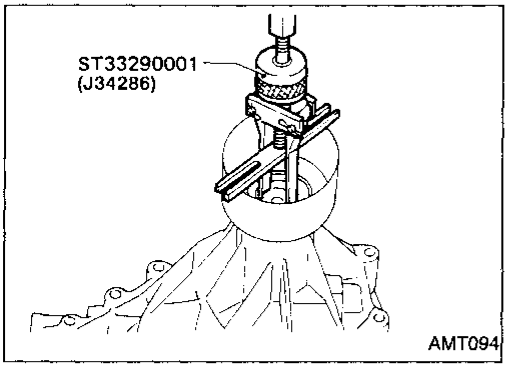

Rear Case

REAR OIL SEAL

Removal

- Pull out rear oil seal.

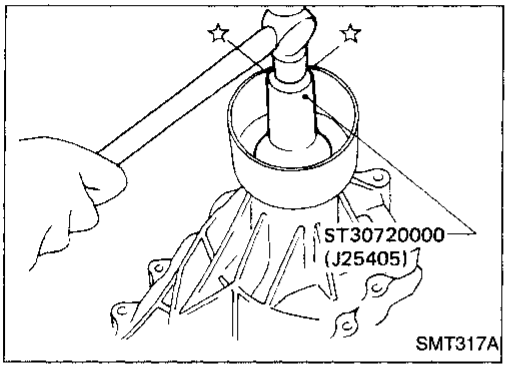

Installation

- Install new rear oil seal until it stops.
- Before installing, apply multi-purpose grease to seal lip.

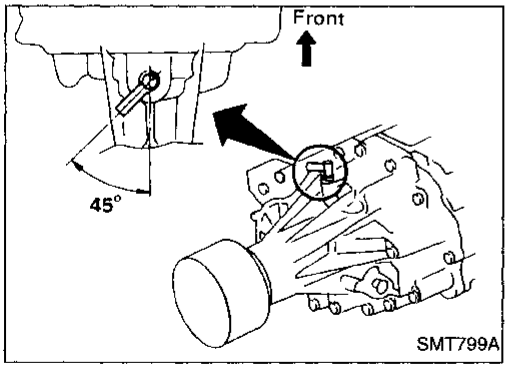

AIR BREATHER

Install as shown in illustration.

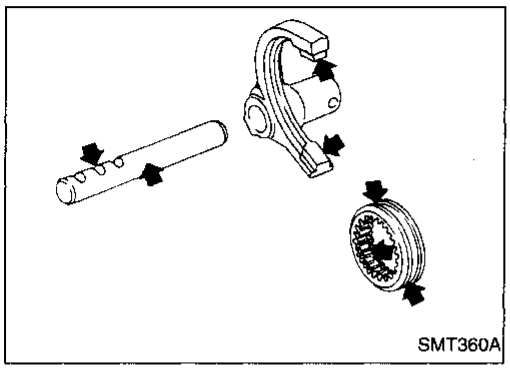

Shift Control Components

INSPECTION

- Check contact surface and sliding surface for wear, scratches, projections or other faulty conditions.

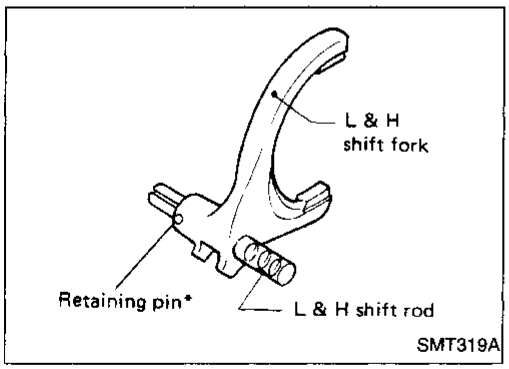

L & H SHIFT ROD & FORK

- Assemble as shown in illustration.

* Retaining pin is the same size as the one for 2-4 shift rod.

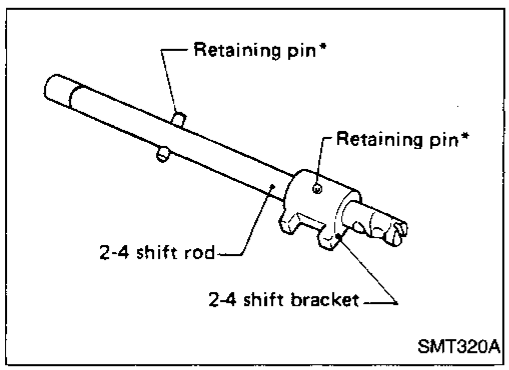

2-4 SHIFT ROD & FORK

- Assemble as shown in illustration.

* Retaining pins are the same size.

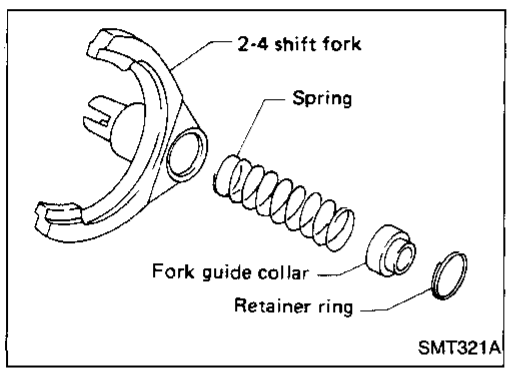

- **Pay attention to the direction of fork guide collar.**

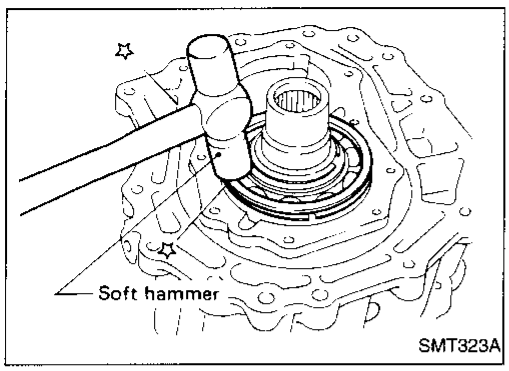

1. Assemble front case.
a. Install main gear assembly by tapping lightly.

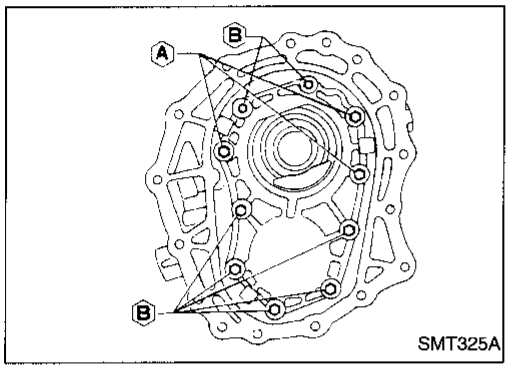

b. Apply sealant to the mating surface and bolts of front case cover, then attach it to the front case.

- **These ten bolts should be coated with sealant.**
  Bolts A:
  : 16 - 21 N·m (1.6 - 2.1 kg-m, 12 - 15 ft-lb)
  Bolts B:
  : 19 - 24 N·m (1.9 - 2.4 kg-m, 14 - 17 ft-lb)

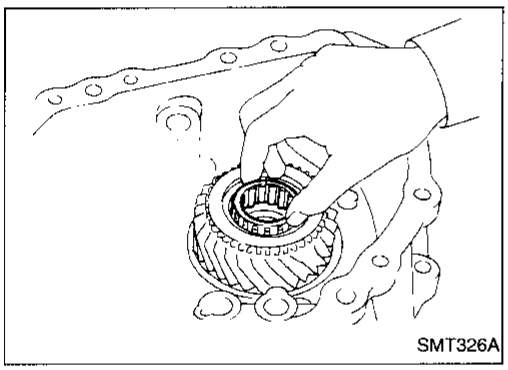

c. Apply gear oil to needle bearing and install it into main gear.

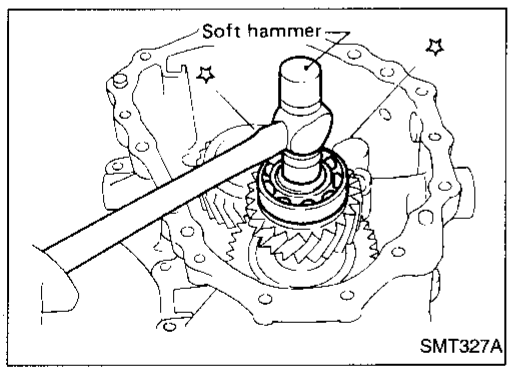

d. Install counter gear assembly by tapping lightly.

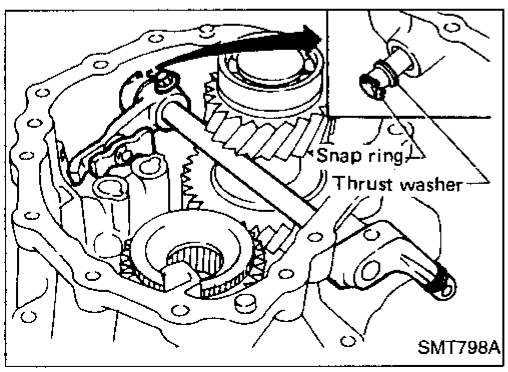

e. Install cross shaft and inner shift lever.

- **When replacing cross shaft, outer shift lever or outer shift lever lock pin, replace them as a set.**

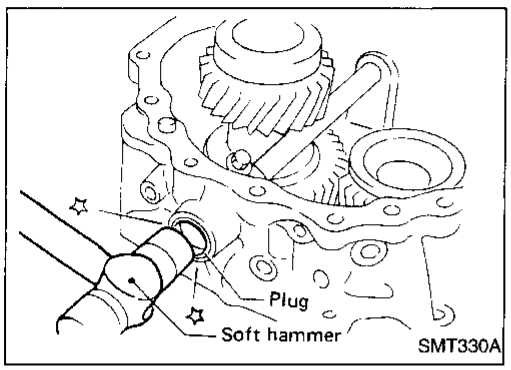

f. Apply sealant to plug, then install it into front case.

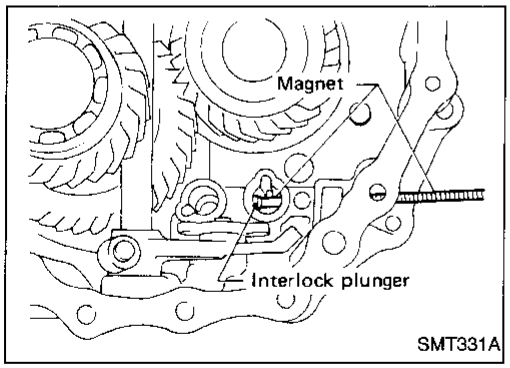

g. Insert interlock plunger into front case.

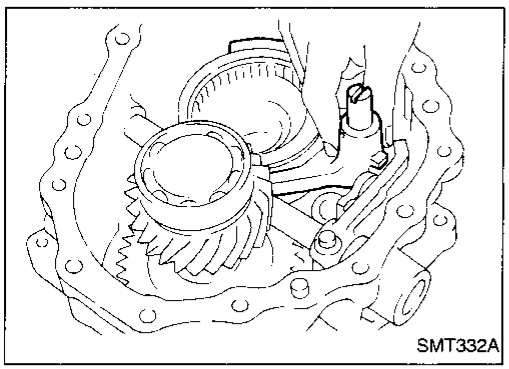

h. Install L & H shift rod and fork assembly with coupling sleeve.

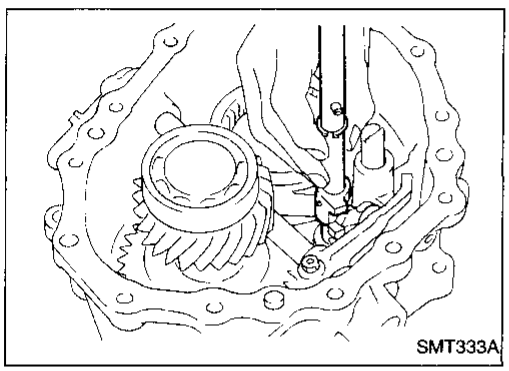

i. Install 2-4 shift rod.

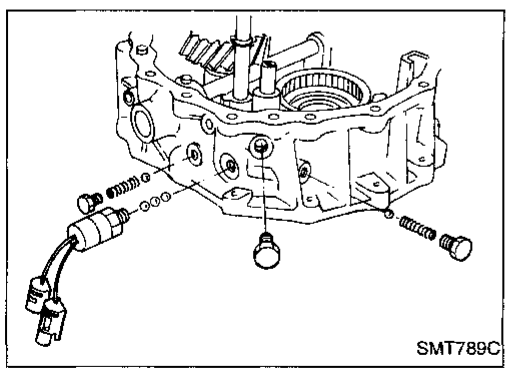

j. Install switches, check balls, check springs and plugs.

- **Apply sealant to switches and plugs.**

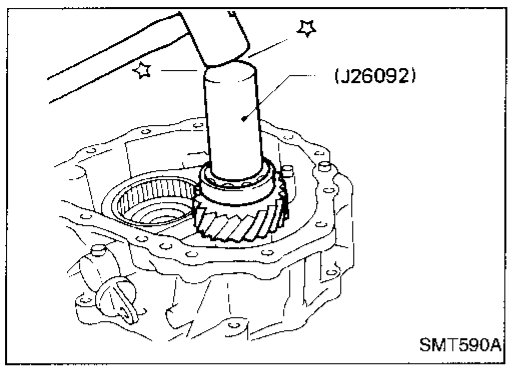

2. Select counter gear rear bearing shim.
a. Seat counter gear assembly.

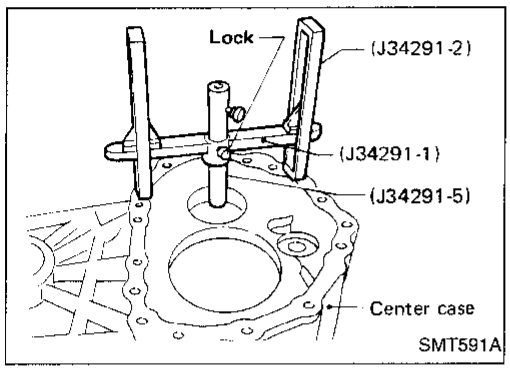

b. Place J34291-1 (bridge), J34291-2 (legs) and J34291-5 (gauging cylinder) on machined surface of center case, allowing gauging cylinder to rest on top outer portion of counter gear rear bearing. Lock gauging cylinder in place.

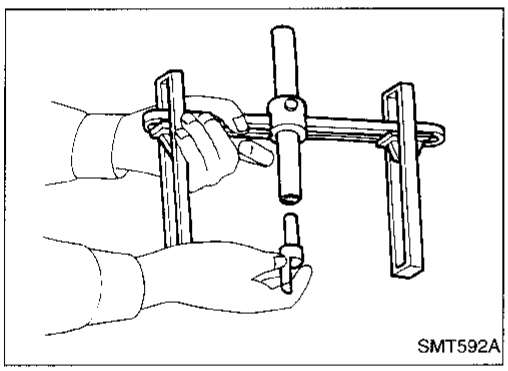

c. Insert J34291-20 (gauging plunger) into J34291-5 (gauging cylinder).

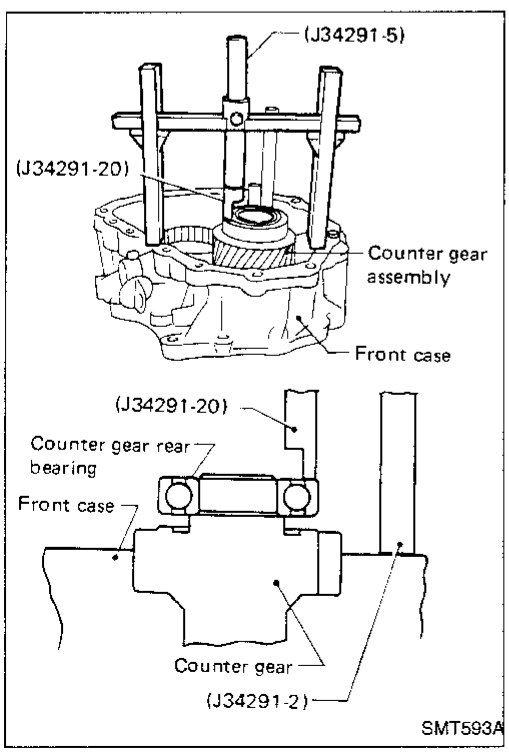

d. Place bridge, legs, gauging cylinder and gauging plunger onto machined surface of front case assembly, allowing gauging plunger to drop until it contacts counter gear rear bearing mating surface.

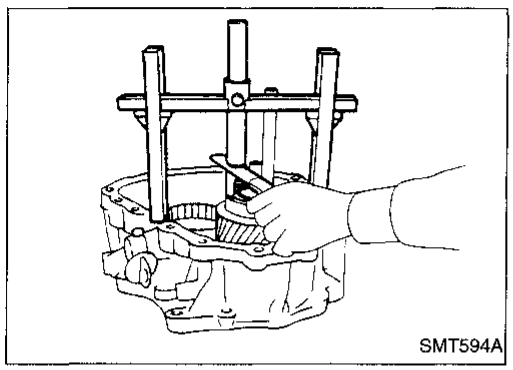

e. Lock gauging plunger in place and use feeler gauge to measure clearance between gauging cylinder and gauging plunger.
f. Use measured distance to select correct counter gear rear bearing shim.
Allowable counter gear clearance:
0 - 0.2 mm (0 - 0.008 in)
Available counter gear rear bearing shim:
Refer to SDS, TF-30.

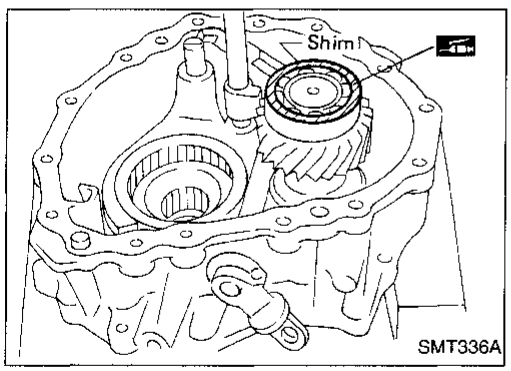

3. Place suitable shim with grease on counter gear rear bearing.
4. Apply gear oil to each part in front case.

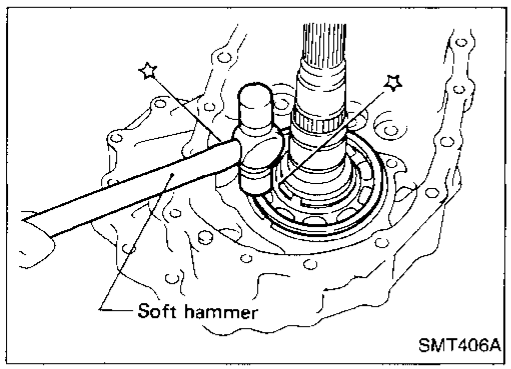

5. Assemble center case assembly.
a. Install mainshaft on center case by tapping lightly.
- **Apply gear oil to mainshaft front bearing.**

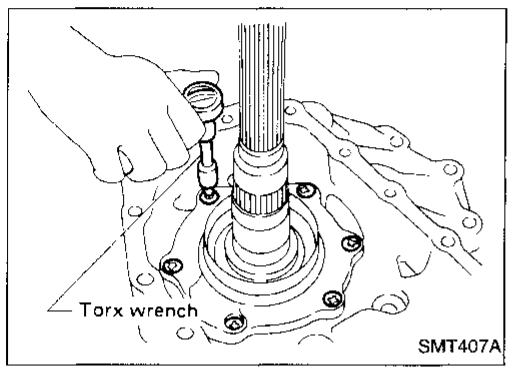

b. Install bearing retainer.
[O]: 16 - 21 N·m (1.6 - 21 kg-m, 12 - 15 ft-lb)

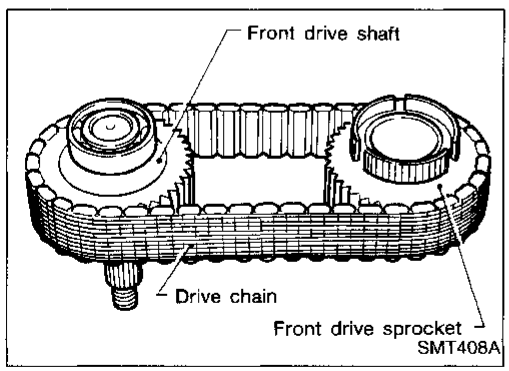

c. Put drive chain onto the front drive sprocket and front drive shaft, and then put them in center case.
- **Be sure to install drive chain in same direction as removed.**

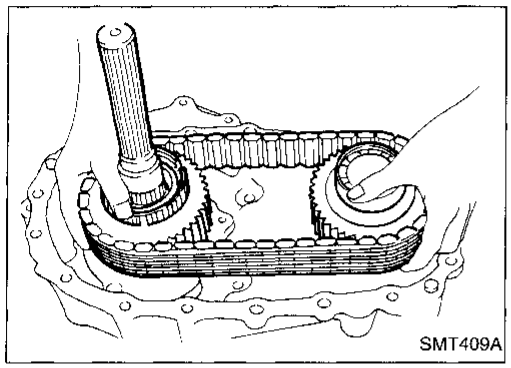
SMT409A

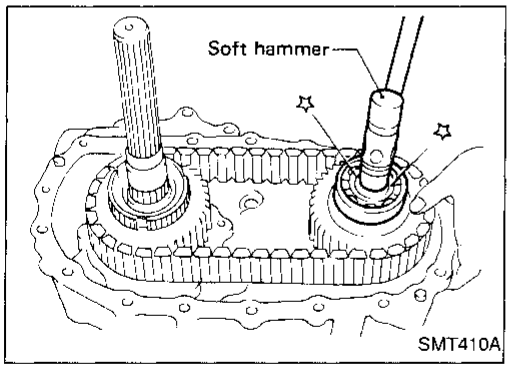

SMT410A

d. Install front drive shaft by tapping lightly.
- **Make sure shafts are aligned in the case.**

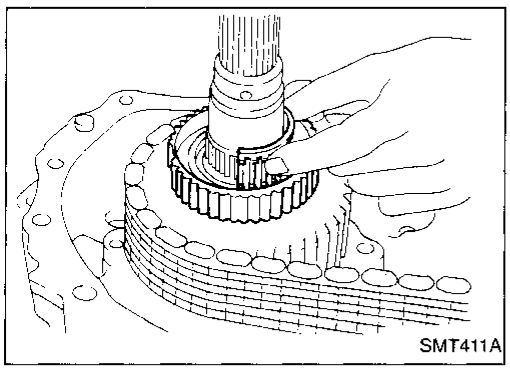
SMT411A

e. Apply gear oil to needle bearings and install them into front drive sprocket.
- **These needle bearings will be installed more easily if front drive sprocket is rotated while installing them.**

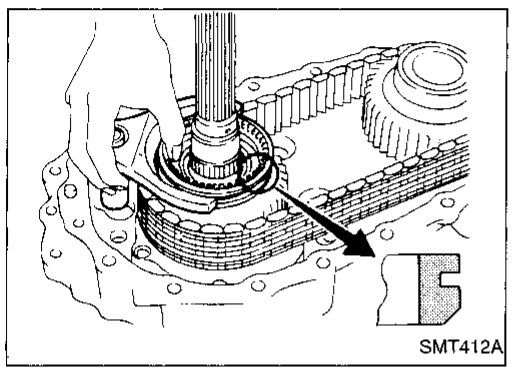
SMT412A

f. Install 2-4 coupling sleeve with 2-4 shift fork.
- **Pay attention to the direction of the coupling sleeve.**

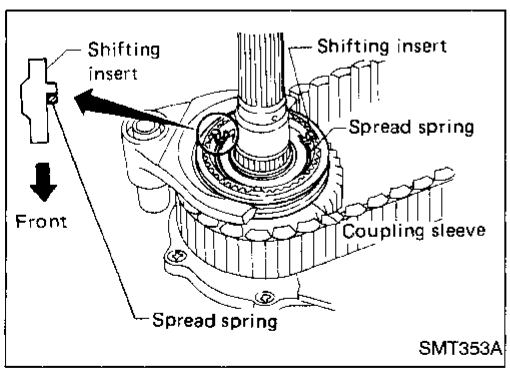

SMT353A

g. Install shifting inserts and spread spring.
- **Pay attention to the direction of shifting inserts.**

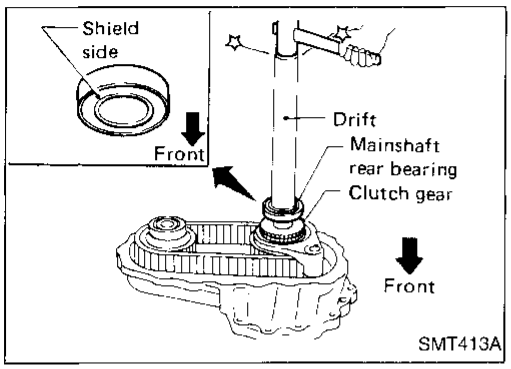

h. Install baulk ring, then install clutch gear and mainshaft rear bearing.

- **Place wooden block under mainshaft in order to protect mainshaft front bearing.**

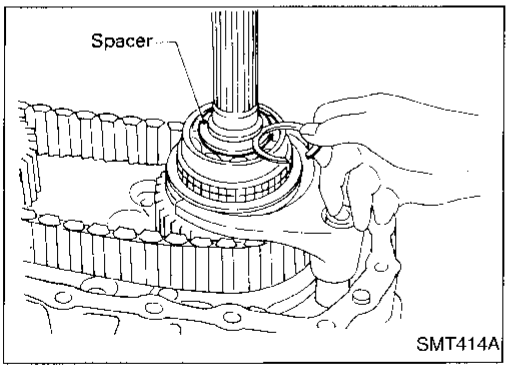

i. Install spacer.

j. Select and install snap ring with proper thickness.

Allowable clearance between snap ring and groove:
0 - 0.15 mm (0 - 0.0059 in)
Available snap ring for mainshaft rear bearing:
Refer to SDS, TF-30.

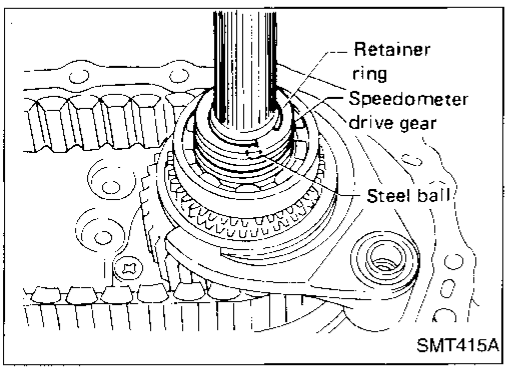

k. Install steel ball, speedometer drive gear and retainer ring.

- **Steel ball is the smallest check ball for this unit.**

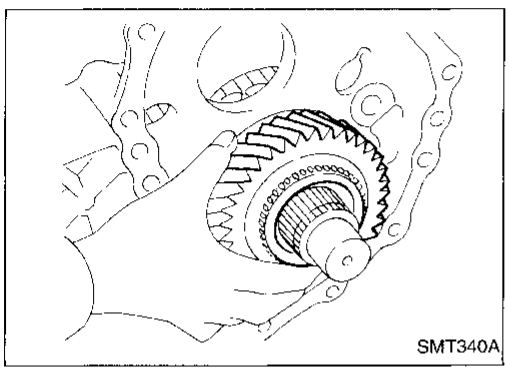

l. Install low gear and bearing onto mainshaft.

- **Apply gear oil to needle bearing.**

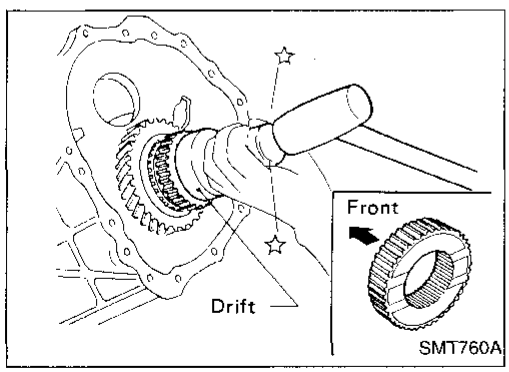

m. Install L & H hub and snap ring onto mainshaft.

- **Pay attention to the direction of L & H hub.**

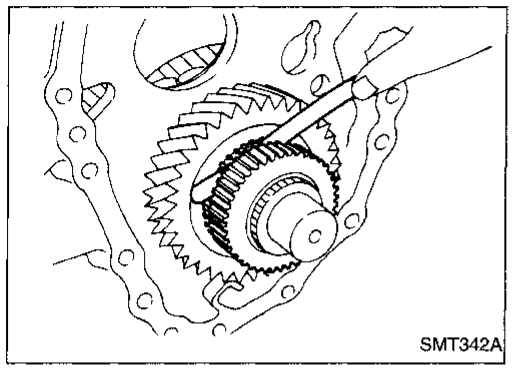

n. Measure low gear end play.
Standard: 0.2 - 0.35 mm (0.0079 - 0.0138 in)

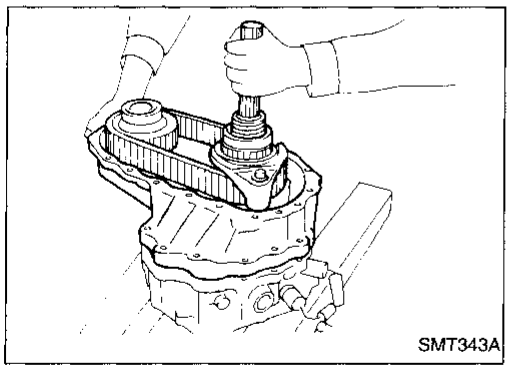

6. Apply sealant to mating surface of center case, then attach to front case and tighten bolts.

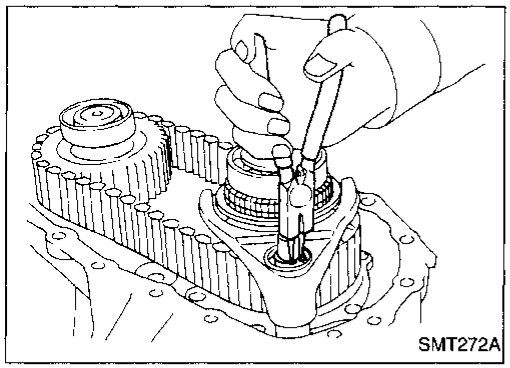

7. Install snap ring to 2-4 shift rod.

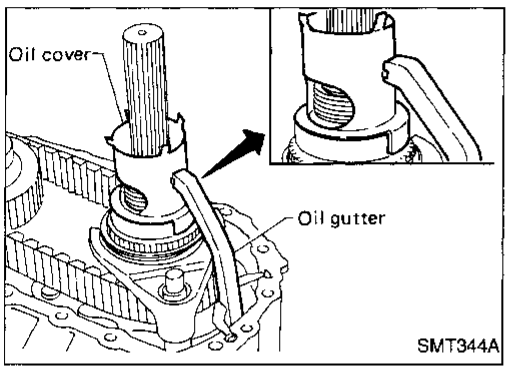

8. Install oil gutter and oil cover.
9. Apply gear oil to each part in center case.

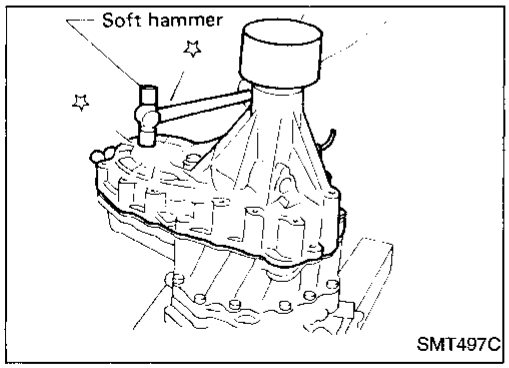

10. Apply sealant to mating surface of rear case, then attach it to center case and tighten bolts.
11. Install 4WD switch.

- **Apply sealant to switch threads.**

General Specifications

Transfer model			TX10A
Gear ratio	High		1.000
	Low		2.020
Number of teeth	Main gear		29
	Low gear		37
	Counter gear	High	38
		Low	24
	Front drive sprocket		41
	Front drive shaft		41
Oil capacity		ℓ (US qt, Imp qt)	2.2 (2-3/8, 2)

Inspection and Adjustment

GEAR END PLAY

Unit: mm (in)

Front drive sprocket	0.2 - 0.35 (0.0079 - 0.0138)
Low gear	0.2 - 0.35 (0.0079 - 0.0138)
Counter gear	0 - 0.2 (0 - 0.008)

CLEARANCE BETWEEN BAULK RING AND CLUTCH GEAR

Unit: mm (in)

Standard	Wear limit
1.0 - 1.5 (0.039 - 0.059)	0.5 (0.020)

AVAILABLE SHIM

Counter gear rear bearing

Allowable clearance	0 - 0.2 mm (0 - 0.008 in)
Thickness mm (in)	Part number
0.1 (0.004)	33112-C6900
0.2 (0.008)	33112-C6901
0.3 (0.012)	33112-C6902
0.4 (0.016)	33112-C6903
0.5 (0.020)	33112-33G00
0.6 (0.024)	33112-33G01

AVAILABLE SNAP RING

Mainshaft front bearing

Allowable clearance	0 - 0.15 mm (0 - 0.0059 in)
Thickness mm (in)	Part number
3.1 (0.122)	33138-73P10
3.19 (0.126)	33138-73P11
3.28 (0.129)	33138-73P12

Mainshaft rear bearing

Allowable clearance	0 - 0.15 mm (0 - 0.0059 in)
Thickness mm (in)	Part number
1.8 (0.071)	33138-73P20
1.89 (0.074)	33138-73P21
1.98 (0.078)	33138-73P22
2.07 (0.081)	33138-73P23
2.16 (0.085)	33138-73P24

Main gear bearing

Allowable clearance	0 - 0.15 mm (0 - 0.0059 in)
Thickness mm (in)	Part number
2.60 (0.102)	33114-73P00
2.69 (0.106)	33114-73P01
2.78 (0.109)	33114-73P02

PROPELLER SHAFT & DIFFERENTIAL CARRIER

SECTION PD

CONTENTS

PREPARATION 2
Special Service Tools 2

Propeller shaft

PROPELLER SHAFT 7
On-vehicle Service 9
Removal and Installation 9
Inspection 9
Disassembly 10
Assembly 11

Final drive

ON-VEHICLE SERVICE 13
Front Oil Seal Replacement (Front final drive) 13
Front Oil Seal Replacement (Rear final drive: Model H233B) 13
Rear Cover Gasket Replacement (Rear final drive: Model C200) 14
REMOVAL AND INSTALLATION (Front final drive) 15
REMOVAL AND INSTALLATION (Rear final drive) 16

R180A

FRONT FINAL DRIVE 17
DISASSEMBLY 18
Pre-inspection 18
Final Drive Housing 18
Differential Case 20
Extension Tube and Differential Side Shaft 21
INSPECTION 23
Ring Gear and Drive Pinion 23
Differential Case Assembly 23
Bearing 23
ADJUSTMENT 24
Side Bearing Preload 24
Pinion Gear Height and Pinion Bearing Preload 25
Tooth Contact 29
ASSEMBLY 30
Extension Tube and Differential Side Shaft 30
Differential Case 30
Final Drive Housing 31

H190A

REAR FINAL DRIVE 35
DISASSEMBLY 36
Pre-inspection 36
Differential Carrier 36
Differential Case 38
INSPECTION 40
Ring Gear and Drive Pinion 40
Differential Case Assembly 40
Bearing 40
LIMITED SLIP DIFFERENTIAL 41
Preparation for Disassembly 41
Disassembly 42
Inspection 42
Assembly 43
ADJUSTMENT 46
Side Bearing Preload 46
Pinion Gear Height 47
Tooth Contact 51
ASSEMBLY 52
Differential Case 52
Differential Carrier 53

CONTENTS (Cont'd.)

C200

REAR FINAL DRIVE 57
DISASSEMBLY 58
Pre-inspection 58
Differential Carrier 58
Differential Case 60
INSPECTION 62
Ring Gear and Drive Pinion 62
Differential Case Assembly 62
Bearing 62
LIMITED SLIP DIFFERENTIAL 63
Preparation for Disassembly 63
Disassembly 63
Inspection 64
Adjustment 65
Assembly 67
ADJUSTMENT 69
Side Bearing Preload 69
Pinion Gear Height 70
Tooth Contact 74
ASSEMBLY 75
Differential Case 75
Differential Carrier 76

H233B

REAR FINAL DRIVE 80
DISASSEMBLY 81
Pre-inspection 81
Differential Carrier 81
Differential Case 83
INSPECTION 85
Ring Gear and Drive Pinion 85
Differential Case Assembly 85
Bearing 85
LIMITED SLIP DIFFERENTIAL 86
Preparation for Disassembly 86
Disassembly 86
Inspection 87
Adjustment 88
Assembly 89
ADJUSTMENT 92
Pinion Gear Height 92
Tooth Contact 95
ASSEMBLY 96
Differential Case 96
Differential Carrier 97
SERVICE DATA AND SPECIFICATIONS (SDS) 100
Propeller Shaft 100
Final Drive 102
General Specifications 102
Inspection And Adjustment (R180A) 103
Inspection And Adjustment (H190A) 104
Inspection And Adjustment (C200) 105
Inspection And Adjustment (H233B) 106

Special Service Tools

The actual shapes of Kent-Moore tools may differ from those of special service tools illustrated here.

Tool number (Kent-Moore No.) Tool name	Description	Unit application			
		R180A	H190A	C200	H233B
ST3127S000 (See J25765-A) Preload gauge ① GG91030000 (J25765) Torque wrench ② HT62940000 (—) Socket adapter ③ HT62900000 (—) Socket adapter	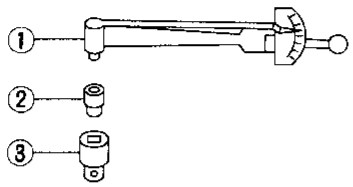 NT124 Measuring pinion bearing preload and total preload	X	X	X	X
KV38100800 (J25604-01), (J34310) Differential attachment	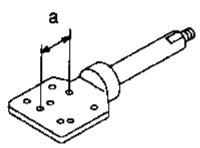 NT119 Mounting final drive (To use, make a new hole.) **a: 152 mm (5.98 in)**	X	—	—	—
ST06310000 (J25602-01) Differential attachment	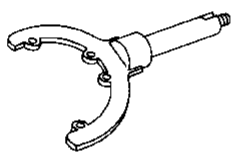 NT140 Mounting final drive	—	X	—	—
ST06340000 (J24310) Differential attachment	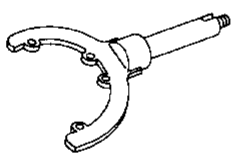 NT140 Mounting final drive	—	—	—	X
ST32580000 (J34312) Differential side bearing adjusting nut wrench	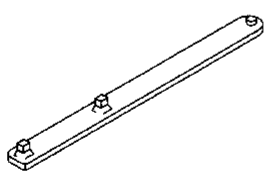 NT141 Adjusting side bearing pre-load and backlash (ring gear-drive pinion)	—	—	—	X
ST33290001 (J25810-A) Side bearing outer race puller	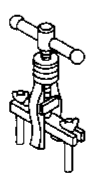 NT076 Removing side bearing outer race and side oil seal	X	—	—	—
ST38060002 (J34311) Drive pinion flange wrench	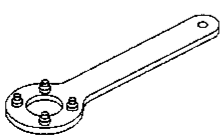 NT113 Removing and installing propeller shaft lock nut and drive pinion lock nut	X	X	X	—

Special Service Tools (Cont'd)

Tool number (Kent-Moore No.) Tool name	Description	Unit application			
		R180A	H190A	C200	H233B
KV38104700 (J34311) Drive pinion flange wrench	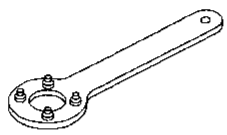 NT113 Removing and installing propeller shaft lock nut, and drive pinion lock nut	—	—	—	X
ST3090S000 (—) Drive pinion rear inner race puller set ① ST30031000 (J22912-01) Puller ② ST30901000 (J26010-01) Base	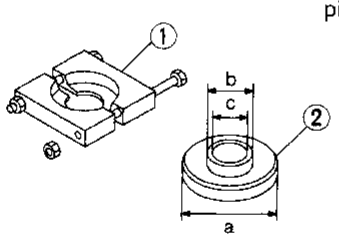 NT527 Removing and installing drive pinion rear inner cone **a: 79 mm (3.11 in) dia.** **b: 45 mm (1.77 in) dia.** **c: 35 mm (1.38 in) dia.**	X	X	X	X
ST3306S001 Differential side bearing puller set ① ST33051001 (J22888-20) Body ② ST33061000 (J8107-2) Adapter	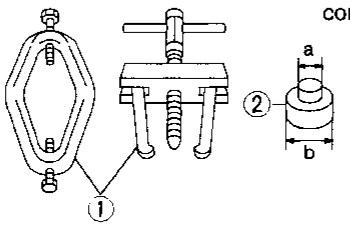 NT072 Removing and installing differential side bearing inner cone **a: 28.5 mm (1.122 in) dia.** **b: 38 mm (1.50 in) dia.**	X	X	X	X
ST33230000 (J25805-01) Differential side bearing drift	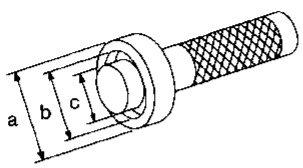 NT085 Installing side bearing inner cone **a: 51 mm (2.01 in) dia.** **b: 41 mm (1.61 in) dia.** **c: 28.5 mm (1.122 in) dia.**	X	X	X	—
ST33190000 (J25523) Differential side bearing drift	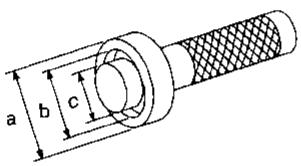 NT085 Installing side bearing inner cone **a: 52 mm (2.05 in) dia.** **b: 45.5 mm (1.791 in) dia.** **c: 34 mm (1.34 in) dia.**	—	—	—	X
ST33081000 (—) Side bearing puller adapter	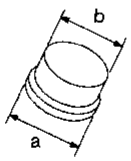 NT431 Installing side bearing inner cone **a: 43 mm (1.69 in) dia.** **b: 33.5 mm (1.319 in) dia.**	—	—	X	X

Special Service Tools (Cont'd)

Tool number (Kent-Moore No.) Tool name	Description	Unit application			
		R180A	H190A	C200	H233B
KV38100600 (J25267) Side bearing spacer drift	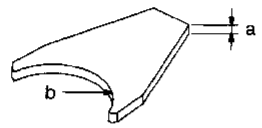 NT528 Installing side bearing spacer **a: 8 mm (0.31 in)** **b: R42.5 mm (1.673 in)**	—	—	X	—
ST30611000 (J25742-1) Drift	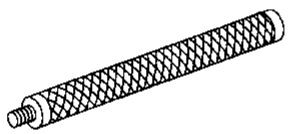 NT090 Installing pinion rear bearing outer race	X	X	X	X
ST30621000 (J25742-5) Drift	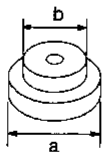 NT073 Installing pinion rear bearing outer race **a: 79 mm (3.11 in) dia.** **b: 59 mm (2.32 in) dia.**	X	X	X	X
ST30701000 (J25742-2) Drift	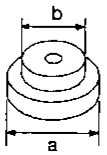 NT073 Installing pinion front bearing outer race **a: 61.5 mm (2.421 in) dia.** **b: 41 mm (1.61 in) dia.**	X	—	—	—
ST30613000 (J25742-3) Drift	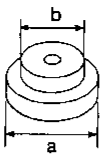 NT073 Installing pinion front bearing outer race **a: 72 mm (2.83 in) dia.** **b: 48 mm (1.89 in) dia.**	—	X	X	X
KV381025S0 (—) Oil seal fitting tool ① ST30720000 (J25405) Drift bar ② KV38102510 (—) Drift	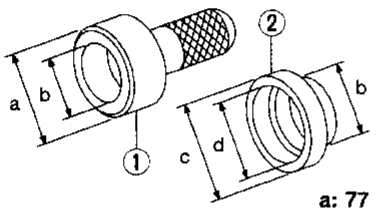 NT525 Installing front oil seal **a: 77 mm (3.03 in) dia.** **b: 55 mm (2.17 in) dia.** **c: 71 mm (2.80 in) dia.** **d: 65 mm (2.56 in) dia.**	X	X	—	X
KV38100500 (J25273) Gear carrier front oil seal drift	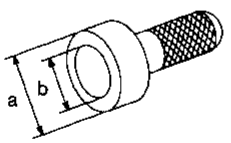 NT115 Installing front oil seal **a: 85 mm (3.35 in) dia.** **b: 60 mm (2.36 in) dia.**	—	—	X	X

Special Service Tools (Cont'd)

Tool number (Kent-Moore No.) Tool name	Description	Unit application			
		R180A	H190A	C200	H233B
ST33720000 (J25817) Differential side retainer guide	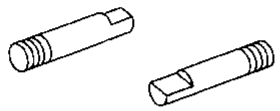 NT138 Installing side retainer	X	—	—	—
ST33270000 (J25809) Side oil seal drift	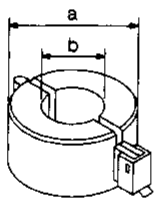 NT526 Installing side oil seal **a: 62 mm (2.44 in) dia.** **b: 28 mm (1.10 in) dia.**	X	—	—	—
(J34309) Differential shim selector	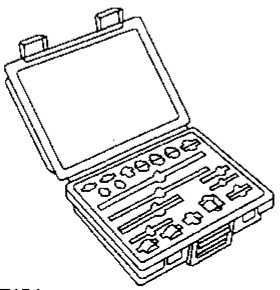 NT134 Adjusting bearing pre-load and gear height	X	X	X	X
(J25269-4) Side bearing discs (2 Req'd)	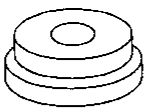 NT136 Selecting pinion height adjusting washer	X	—	X	—
(J25269-18) Side bearing discs (2 Req'd)	NT135 Selecting pinion height adjusting washer	—	X	—	X
(J8129) Spring gauge	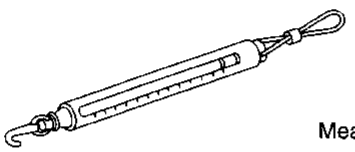 NT127 Measuring carrier turning torque	X	X	X	X
(J35764) Gear carrier side oil seal drift	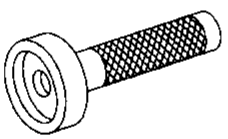 NT120 Installing side oil seal	X	—	—	—

Special Service Tools (Cont'd)

Tool number (Kent-Moore No.) Tool name	Description	Unit application			
		R180A	H190A	C200	H233B
KV381051S0 (—) Rear axle shaft dummy ① KV38105110 (—) Torque wrench side ② KV38105120 (—) Vice side	Checking differential torque on limited slip differential 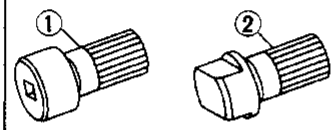 NT142	—	X	X	—
KV381052S0 (—) Rear axle shaft dummy ① KV38105210 (—) Torque wrench side ② KV38105220 (—) Vice side	Checking differential torque on limited slip differential 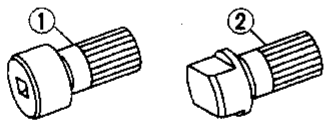 NT142	—	—	—	X

Front propeller shaft (Model 2F71H)

SEC. 370

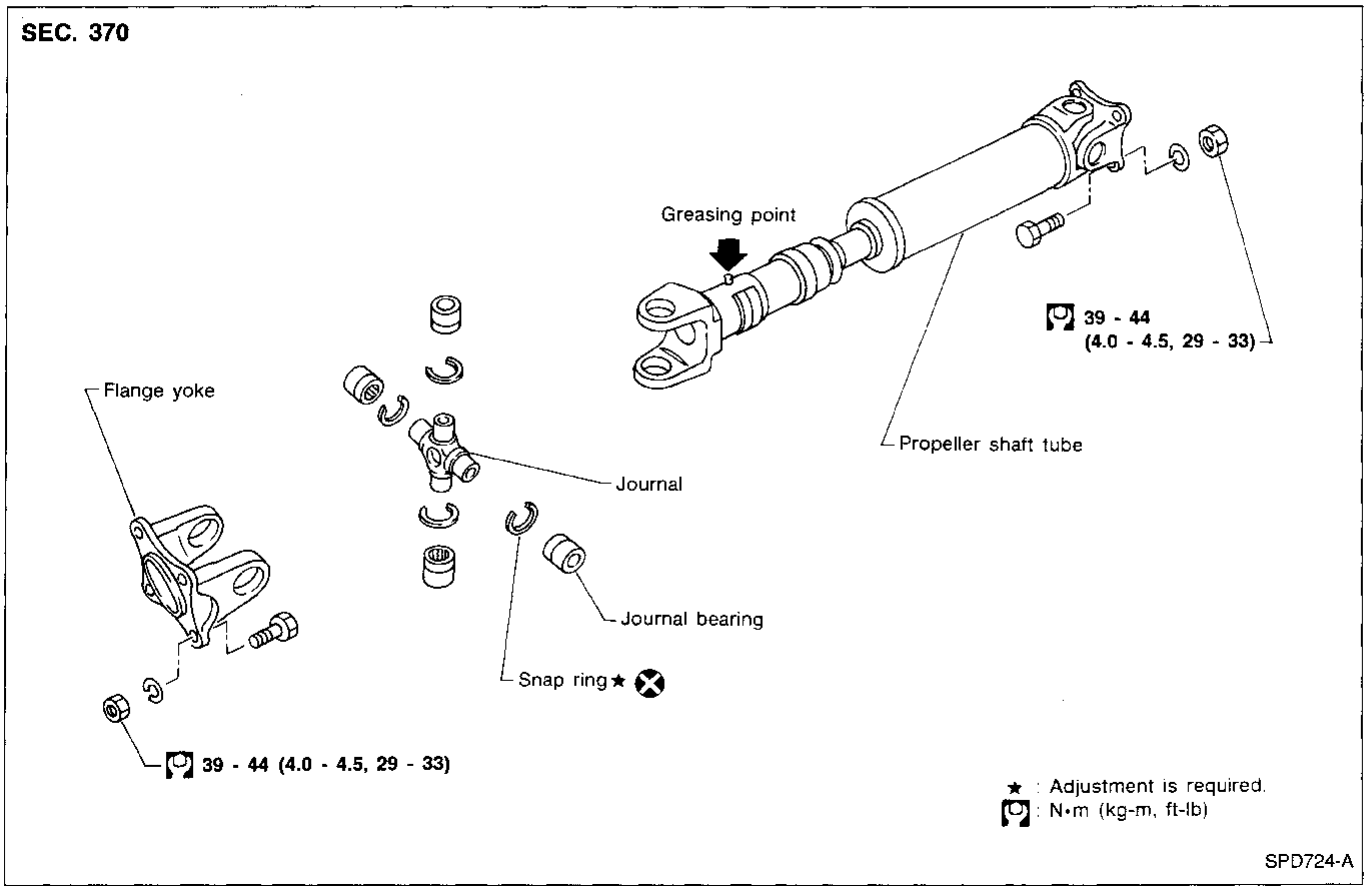

Rear propeller shaft (Model 2S80B)

SEC. 370

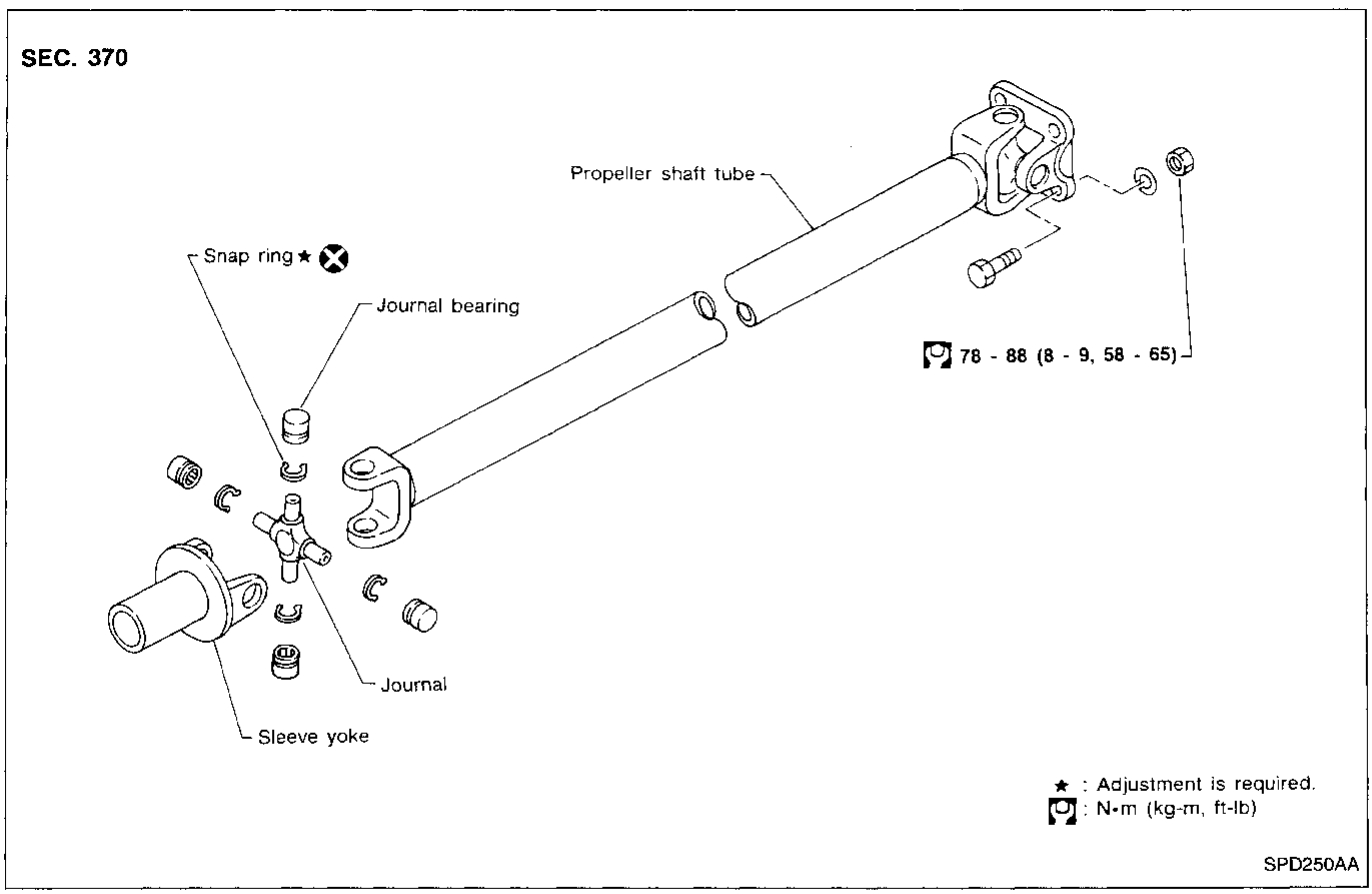

Rear propeller shaft (Model 3S80B)

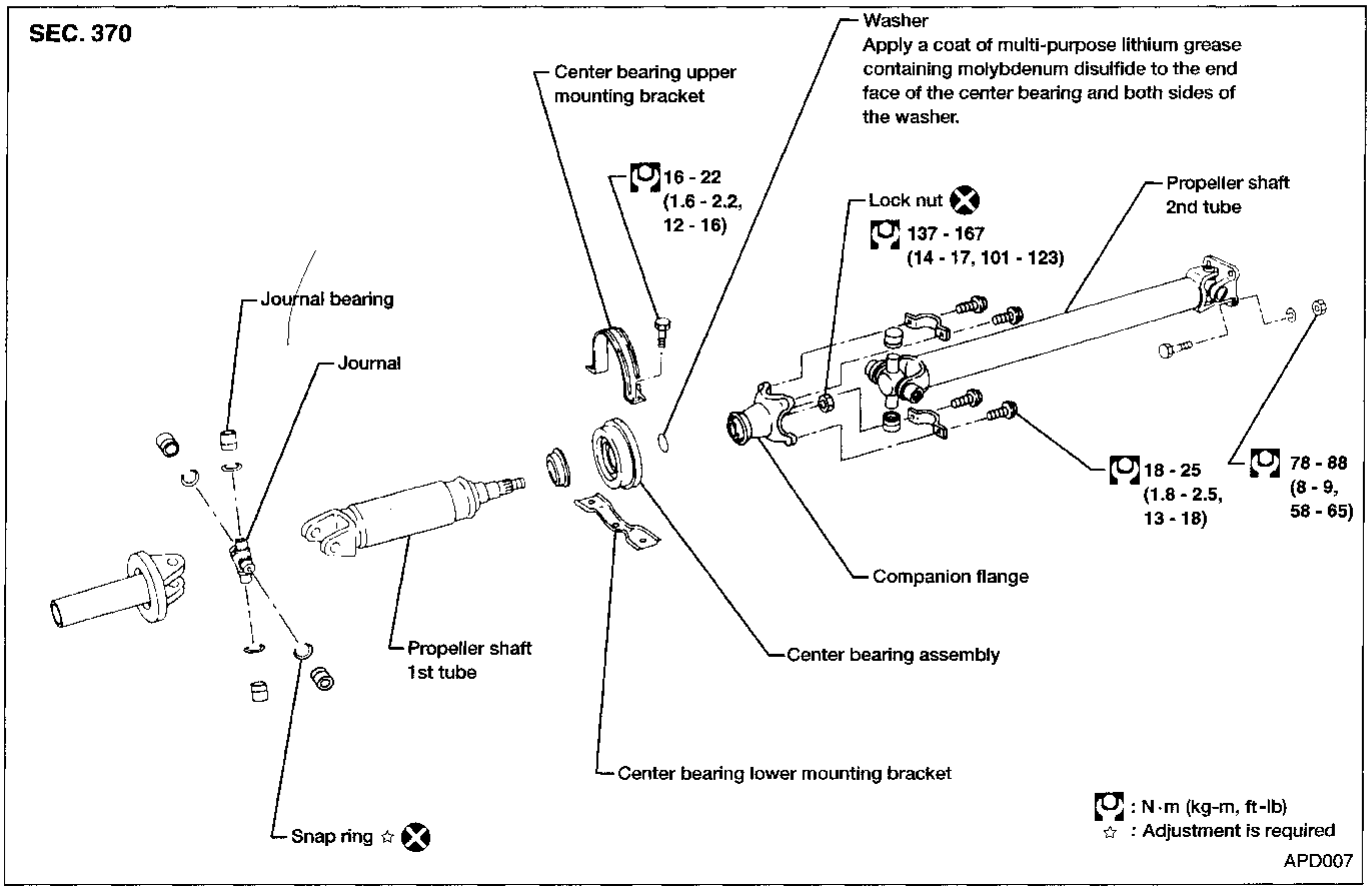

Rear propeller shaft (Model 3S71A)

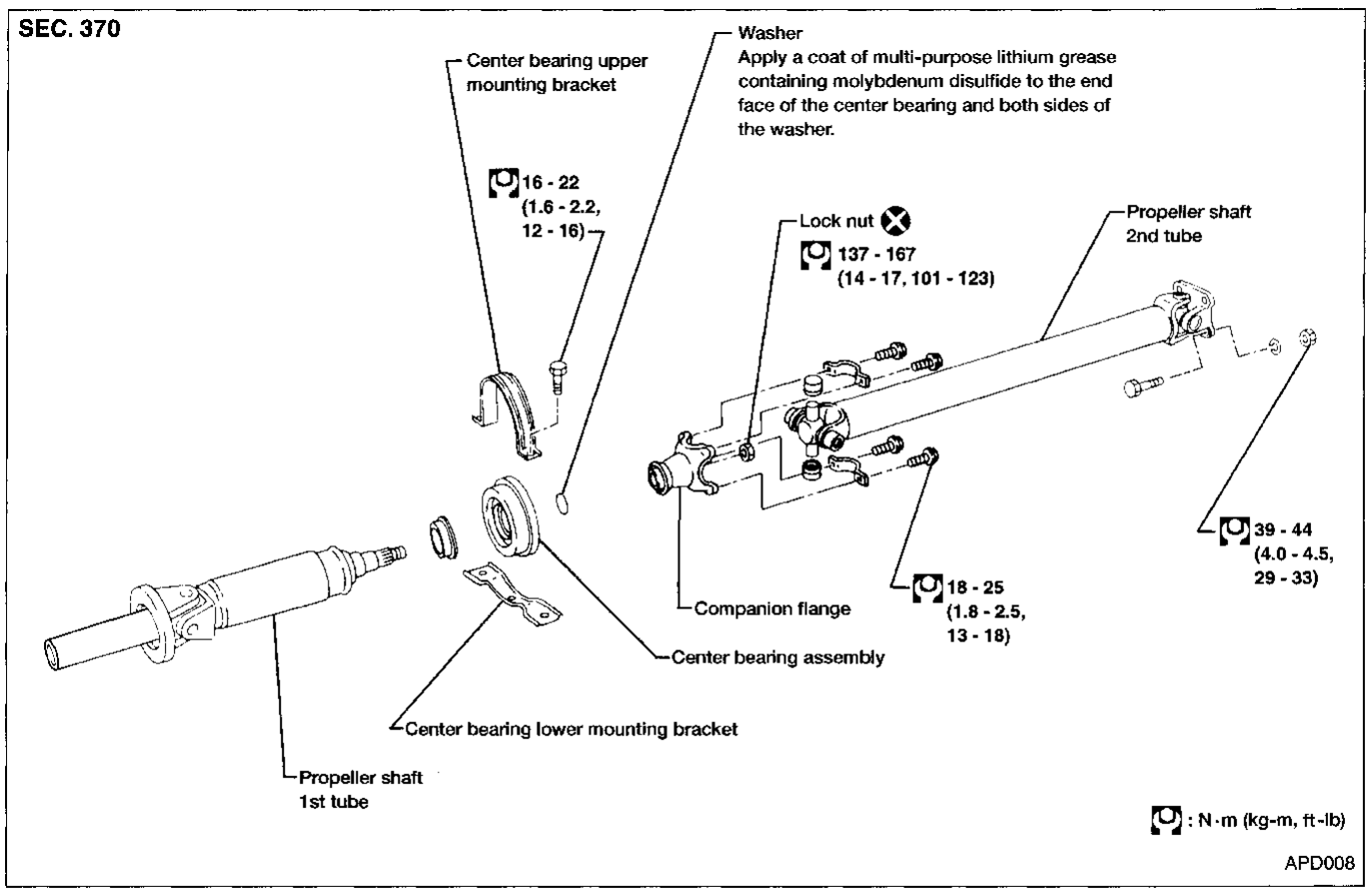

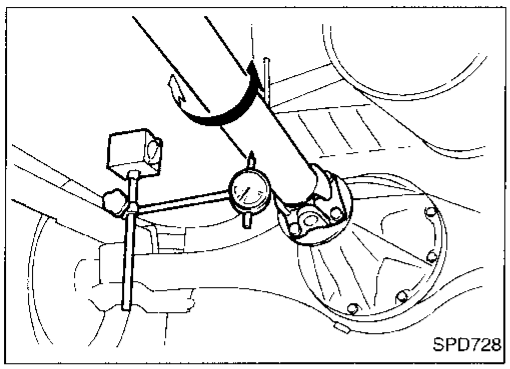
SPD728

On-vehicle Service

PROPELLER SHAFT VIBRATION

If vibration is present at high speed, inspect propeller shaft runout first.

1. Raise rear end of vehicle until wheels are clear of the ground.
2. Measure propeller shaft runout at several points along propeller shaft by rotating final drive companion flange using hands.
3. If runout exceeds specifications, disconnect propeller shaft at final drive companion flange. Rotate companion flange 180 degrees, then reconnect propeller shaft.
   Runout limit: 0.6 mm (0.024 in)
4. Check runout again. If runout still exceeds the limit, replace propeller shaft assembly.
5. Perform road test.

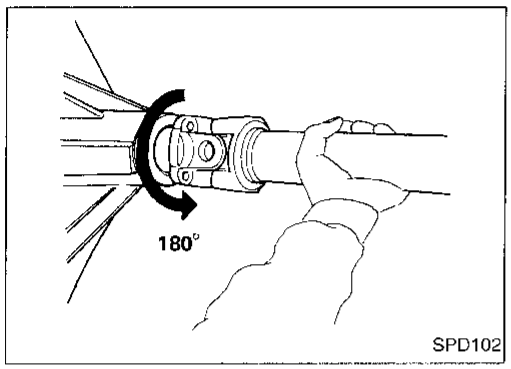

SPD102

APPEARANCE CHECKING

- Inspect propeller shaft tube surface for dents or cracks and replace as necessary.
- Check center bearing for noise or damage and replace as necessary.

Removal and Installation

1. Place matching marks on flanges, then separate propeller shaft from final drive.

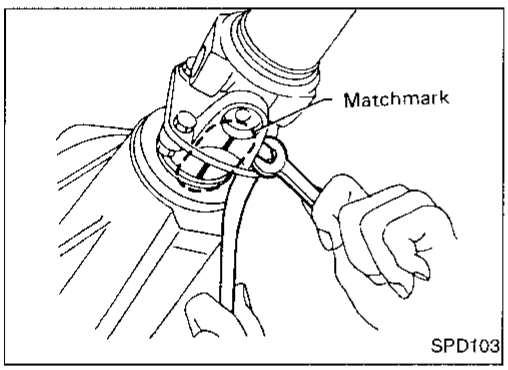

SPD103

2. Remove propeller shaft.

- **Insert plug into rear oil seal after removing rear propeller shaft.**

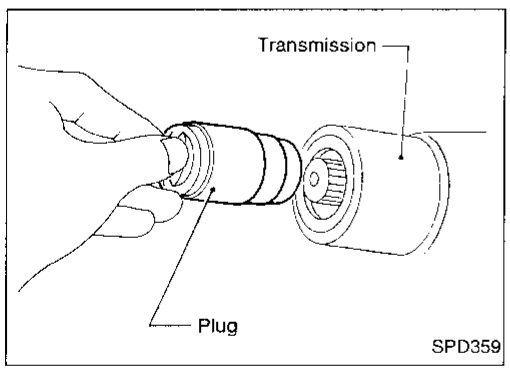

SPD359

Inspection

- Inspect propeller shaft runout. If runout exceeds the limit, replace propeller shaft assembly.
  Runout limit: 0.6 mm (0.024 in)

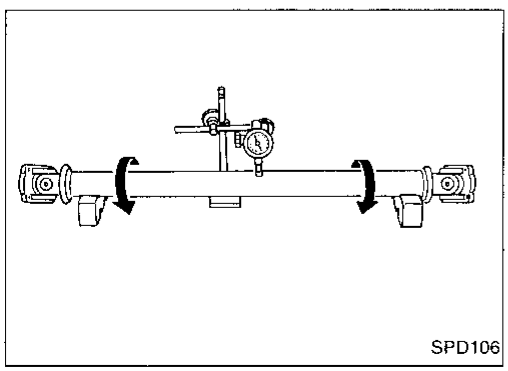
SPD106

Inspection (Cont'd)

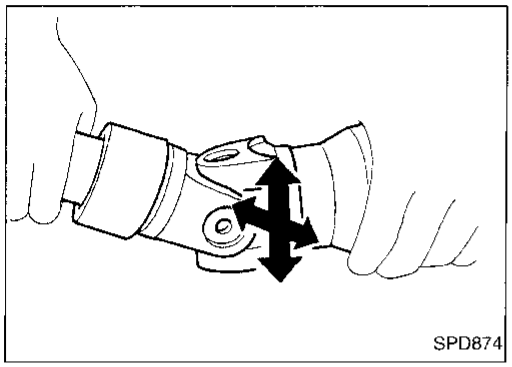

- Inspect journal axial play.
  If play exceeds the limit, replace propeller shaft assembly.
  Journal axial play:
  0.02 mm (0.0008 in) or less

Disassembly

CENTER BEARING

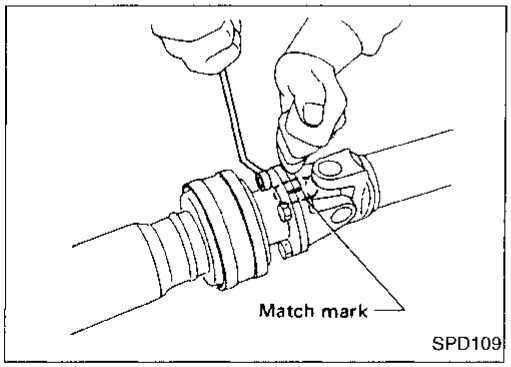

1. Place matching marks on flanges, then separate 2nd tube from 1st tube.

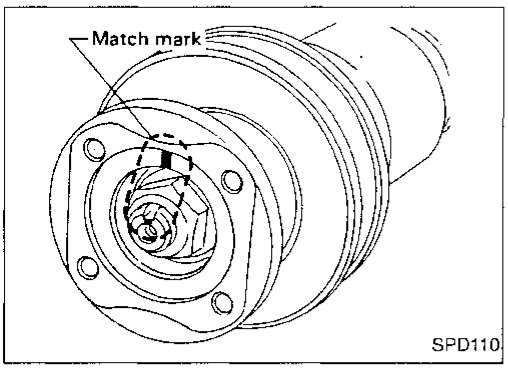

2. Place matching marks on the flange and shaft.

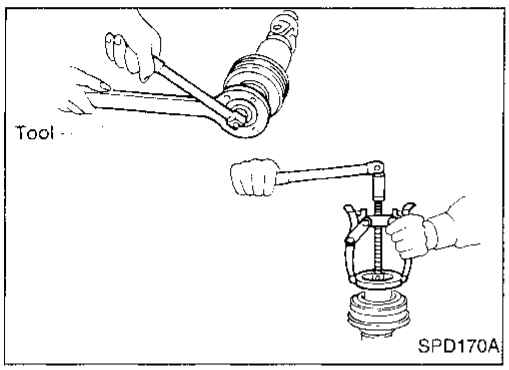

3. Remove locking nut using Tool.
   Tool numbers:
   R180A, H190A, C200
   ST38060002 (J34311)
   H233B
   KV38104700 (J34311)
4. Remove companion flange using puller.

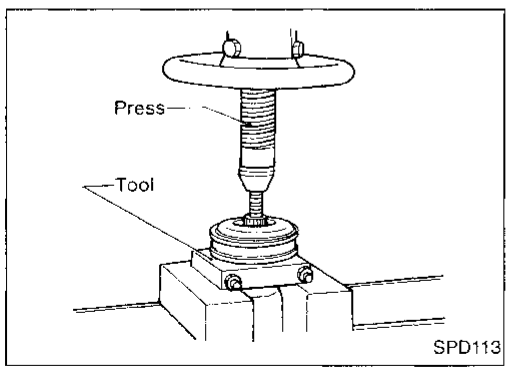

5. Remove center bearing using Tool and press.
   Tool number: ST30031000 (J22912-01)

Disassembly (Cont'd)

JOURNAL

NOTE:

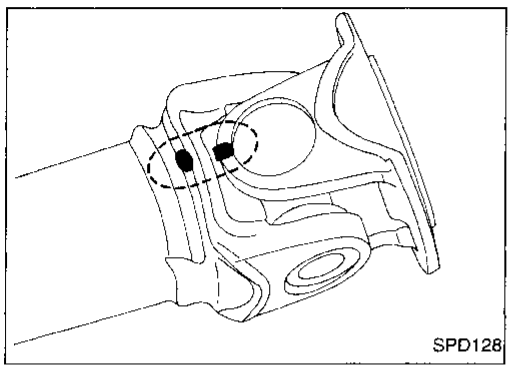

1. Place matching marks on propeller shaft and flange or yoke.

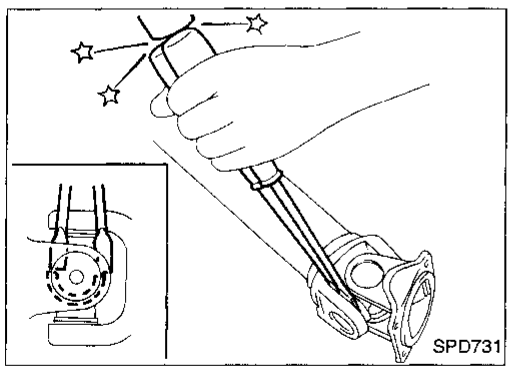

2. Remove snap ring.

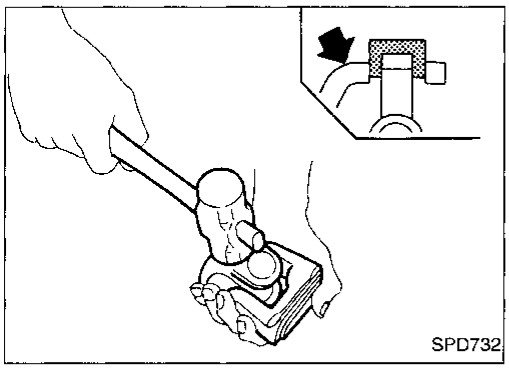

3. Remove pushed out journal bearing by lightly tapping yoke with a hammer, taking care not to damage journal and yoke hole.

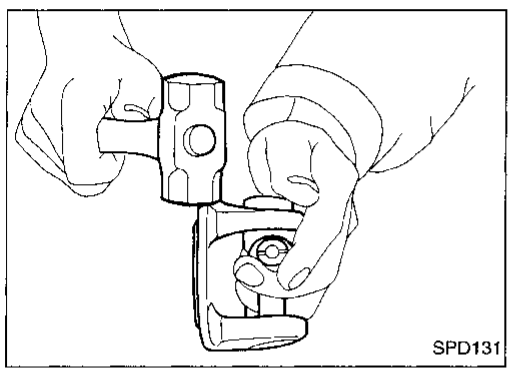

4. Remove bearing at opposite side in above operation.

Put marks on disassembled parts so that they can be reinstalled in their original positions.

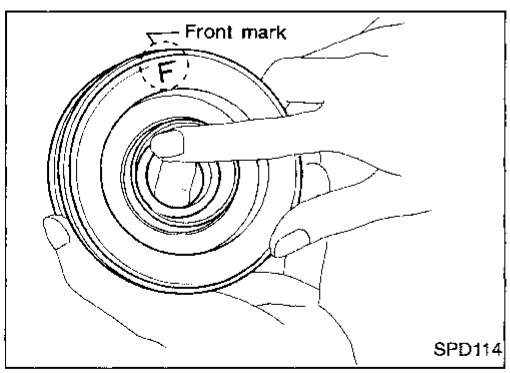

Assembly

CENTER BEARING

- When installing center bearing, position the "F" mark on center bearing toward front of vehicle.
- **Apply a coat of multi-purpose lithium grease containing molybdenum disulfide to the end face of the center bearing and both sides of the washer.**

Assembly (Cont'd)

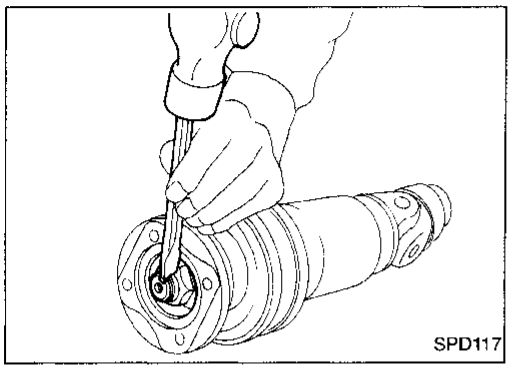

- Stake the nut. Always use new one.
- Align match marks when assembling tubes.

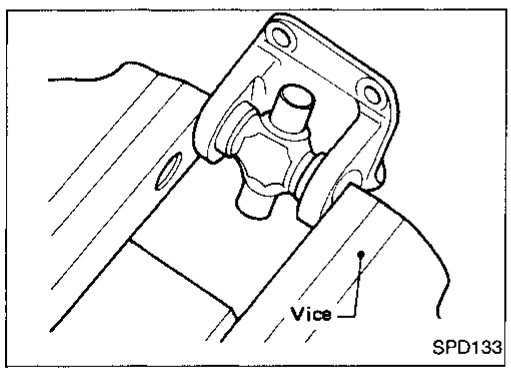

JOURNAL

1. Assemble journal bearing. Apply recommended multi-purpose grease on bearing inner surface.

When assembling, be careful that needle bearing does not fall down.

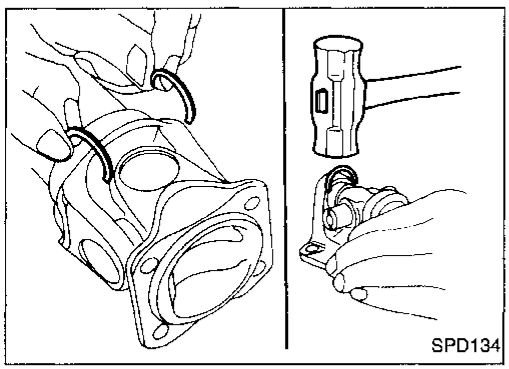

2. Select snap ring that will provide specified play in axial direction of journal, and install them.
   Refer to SDS, PD-101.

Select snap rings with a difference in thickness at both sides within 0.06 mm (0.0024 in).

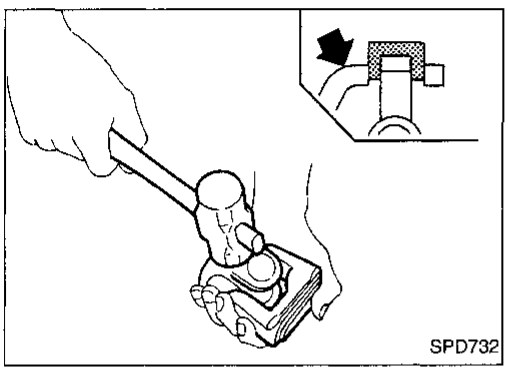

3. Adjust thrust clearance between bearing and snap ring to zero by tapping yoke.

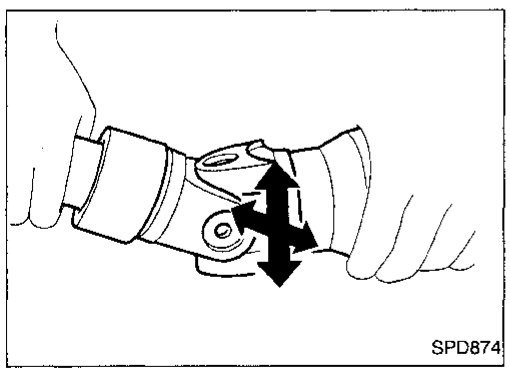

4. Check to see that journal moves smoothly and check for axial play.
   Axial play: 0.02 mm (0.0008 in) or less

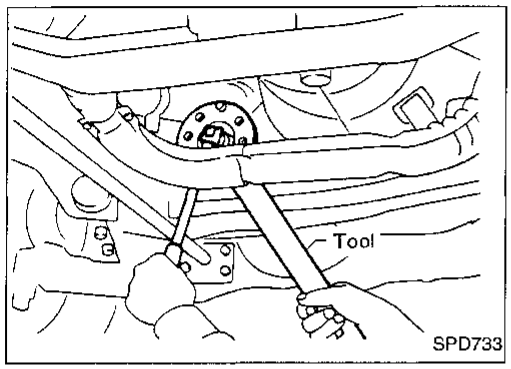

Front Oil Seal Replacement (Front final drive)

1. Remove front propeller shaft.
2. Loosen drive pinion nut.
   Tool number: ST38060002 (J34311)

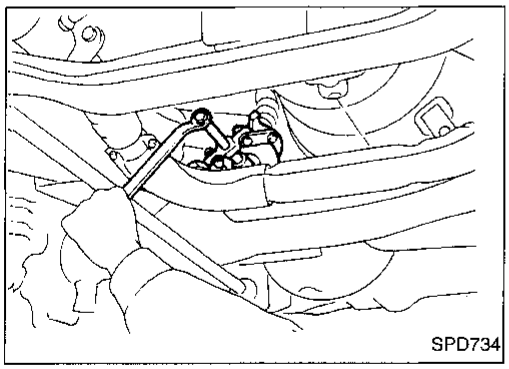

3. Remove companion flange using puller.

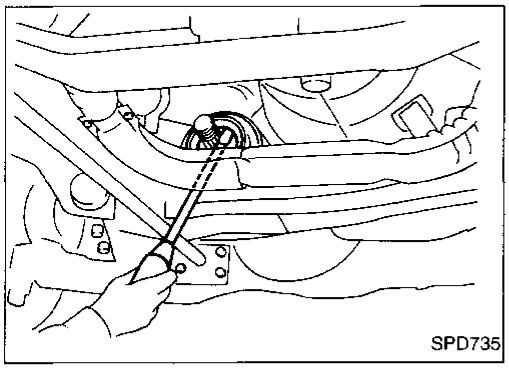

4. Remove front oil seal.

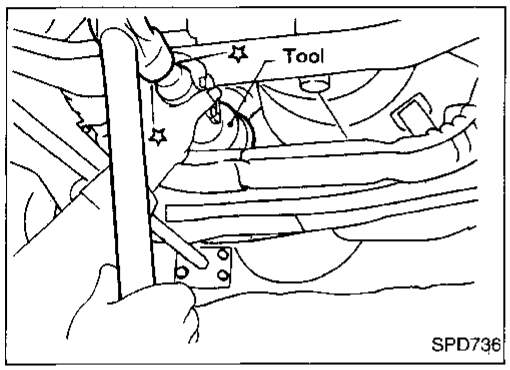

5. Apply multi-purpose grease to cavity at sealing lips of oil seal. Press front oil seal into carrier.
   Tool number:
   ST30720000 (J25405)
6. Install companion flange and drive pinion nut.
7. Install propeller shaft.

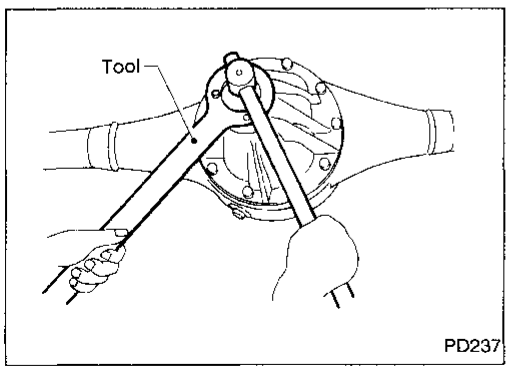

Front Oil Seal Replacement (Rear final drive: Model H233B)

CAUTION:
For final drive models using collapsible spacer (H190A, C200), bearing preload must be adjusted whenever companion flange is removed. Therefore, final drive overhaul is required.

1. Remove propeller shaft.
2. Loosen drive pinion nut.
   Tool number: KV38104700 (J34311)

Front Oil Seal Replacement (Rear final drive: Model H233B) (Cont'd)

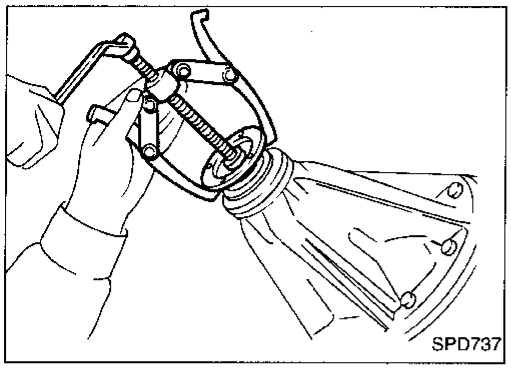

3. Remove companion flange.

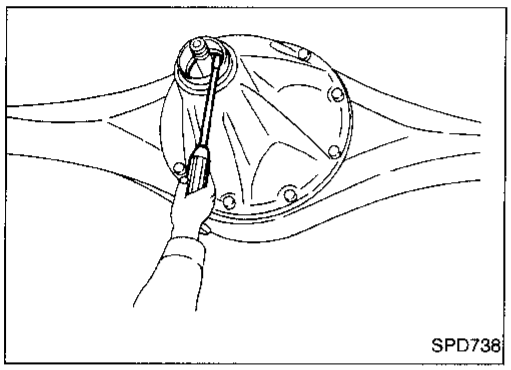

4. Remove front oil seal.

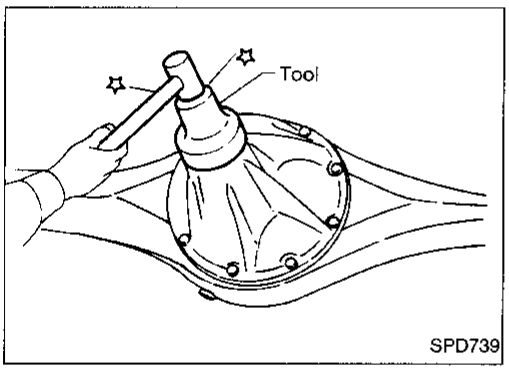

5. Apply multi-purpose grease to cavity at sealing lips of oil seal. Press front oil seal into carrier.
   Tool number: KV38100500 (J25273)
6. Install companion flange and drive pinion nut.
7. Install rear propeller shaft.

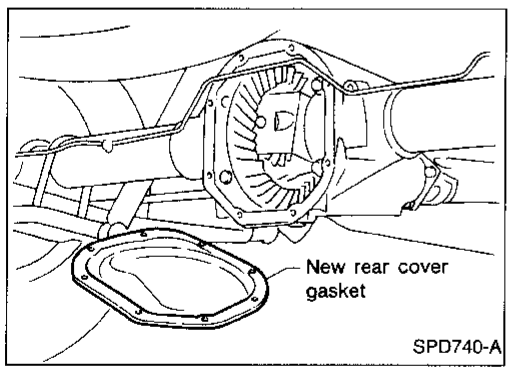

Rear Cover Gasket Replacement (Rear final drive: Model C200)

1. Drain gear oil.
2. Remove rear cover and rear cover gasket.
3. Install new rear cover gasket and rear cover.
4. Fill final drive with recommended gear oil.

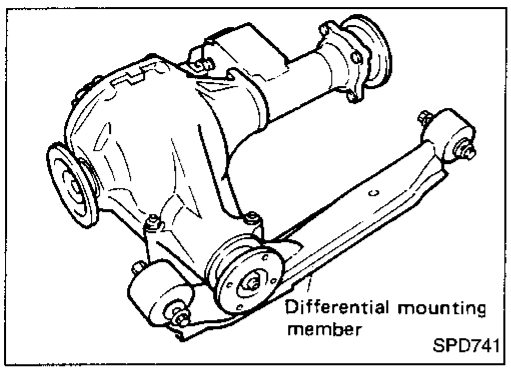

Removal

1. Remove front propeller shaft.
2. Remove drive shaft. Refer to FA section ["Drive Shaft", "FRONT AXLE (4WD)"].
3. Remove engine mounting bolts and raise up engine.
4. Remove front final drive together with differential mounting member.

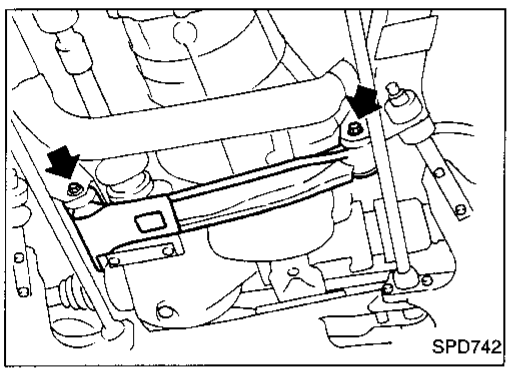

Installation

1. Install front final drive assembly together with differential mounting member.

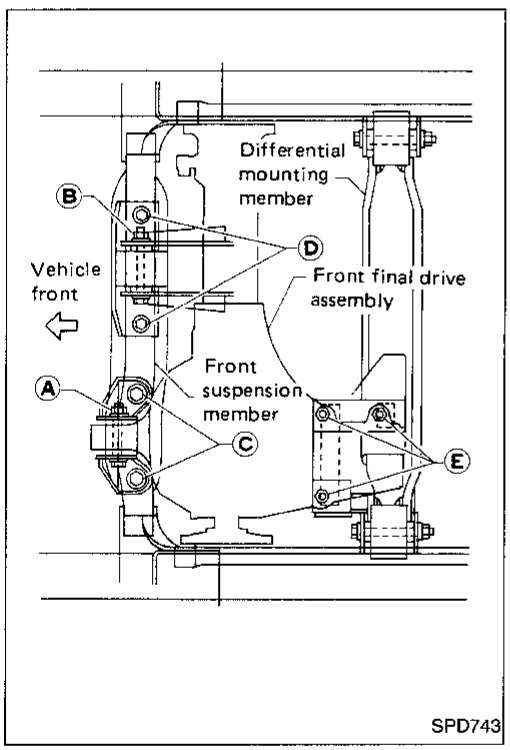

2. Tighten front final drive securing bolts and nuts by following the procedure to prevent drive train vibration.
   a. Temporarily tighten nut Ⓐ.
   b. Temporarily tighten nut Ⓑ.
   c. Tighten bolt Ⓒ to the torque of 68 to 87 N·m (6.9 to 8.9 kg-m, 50 to 64 ft-lb).
   d. Tighten bolt Ⓓ to the torque of 68 to 87 N·m (6.9 to 8.9 kg-m, 50 to 64 ft-lb).
   e. Tighten nut Ⓐ to the torque of 68 to 87 N·m (6.9 to 8.9 kg-m, 50 to 64 ft-lb).
   f. Tighten nut Ⓑ to the torque of 68 to 87 N·m (6.9 to 8.9 kg-m, 50 to 64 ft-lb).
   g. Tighten nut Ⓔ to the torque of 68 to 87 N·m (6.9 to 8.9 kg-m, 50 to 64 ft-lb).
3. Install drive shaft. Refer to FA section ["Drive Shaft", "FRONT AXLE (4WD)"].
4. Install front propeller shaft.

Removal

- Remove propeller shaft.

Plug front end of transfer.

- Remove axle shaft.
  Refer to RA section ("REAR AXLE").

CAUTION:

- **Be careful not to damage spline, sleeve yoke and front oil seal when removing propeller shaft.**
- **Before removing the final drive assembly or rear axle assembly, disconnect the ABS sensor harness connector from the assembly and move it away from the final drive/ rear axle assembly area. Failure to do so may result in the sensor wires being damaged and the sensor becoming inoperative.**

Installation

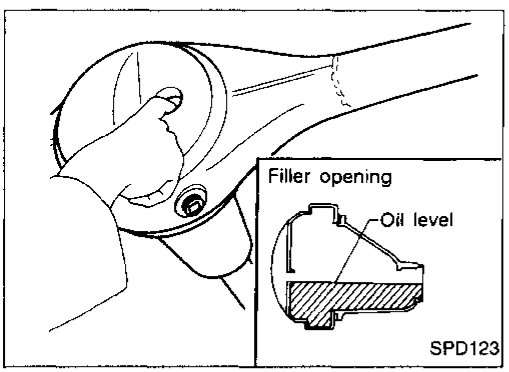

- Fill final drive with recommended gear oil.

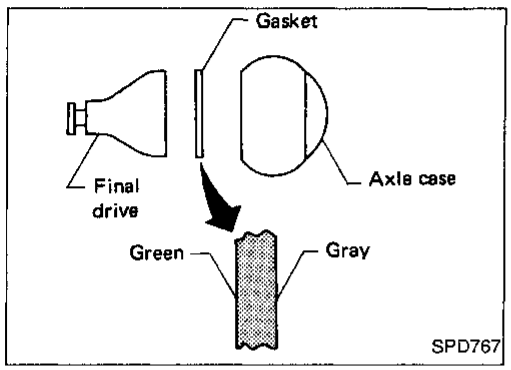

- Pay attention to the direction of gasket (H233B only).

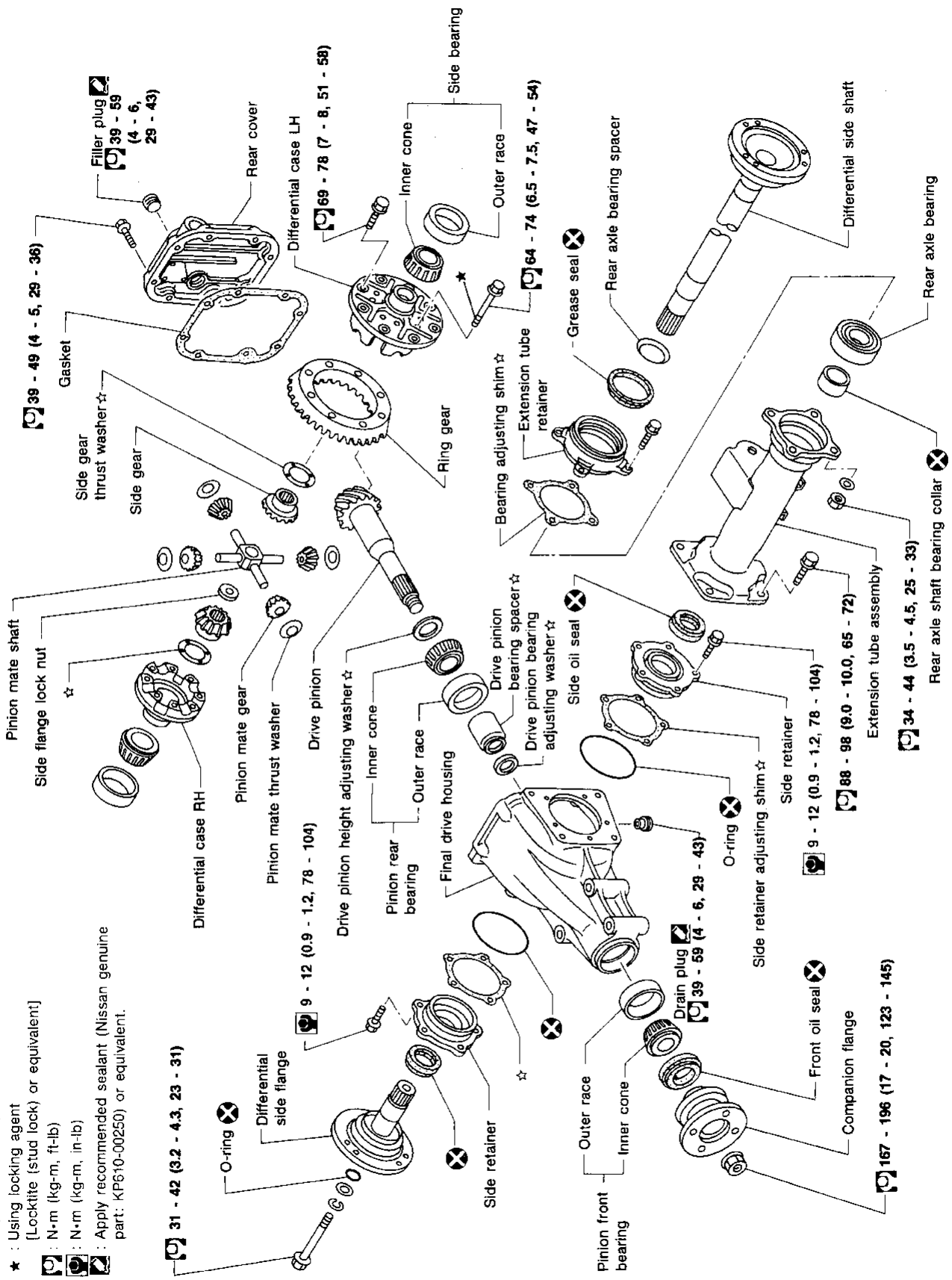

SEC. 381

☆ : Adjustment is required.
★ : Using locking agent [Locktite (stud lock) or equivalent]
: N·m (kg-m, ft-lb)
: N·m (kg-m, in-lb)
: Apply recommended sealant (Nissan genuine part: KP610-00250) or equivalent.

SPD284AA

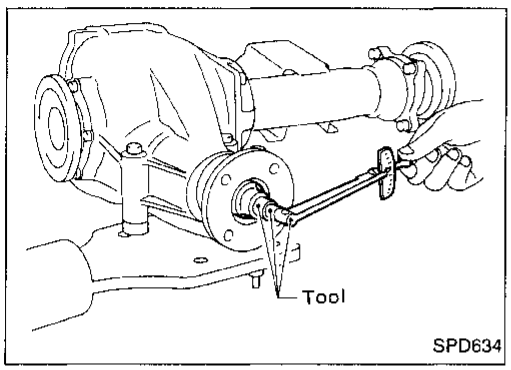

Pre-inspection

Before disassembling final drive, perform the following inspection.

- Total preload

a. Turn drive pinion in both directions several times to set bearing rollers.

b. Check total preload with Tool.

Tool number: ST3127S000 (J25765-A)
Total preload:
1.2 - 2.3 N·m
(12 - 23 kg-cm, 10 - 20 in-lb)

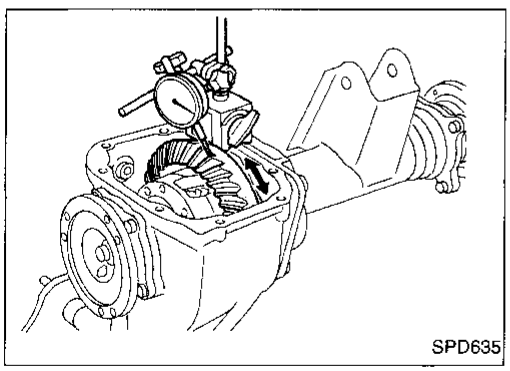

- Ring gear-to-drive pinion backlash
  Check backlash of ring gear with a dial indicator at several points.
  Ring gear-to-drive pinion backlash:
  0.13 - 0.18 mm (0.0051 - 0.0071 in)

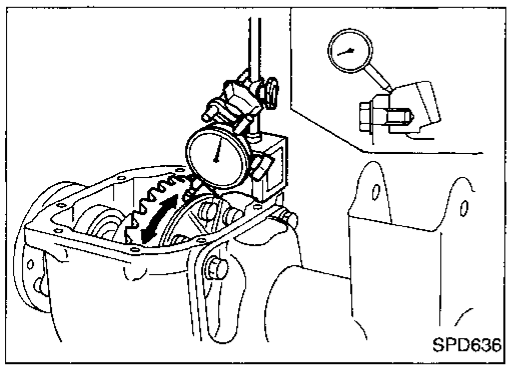

- Ring gear runout
  Check runout of ring gear with a dial indicator.
  Runout limit:
  0.05 mm (0.0020 in)
- Tooth contact
  Check tooth contact. Refer to "ADJUSTMENT", PD-29.

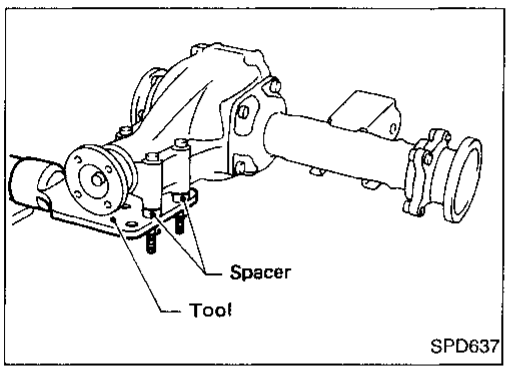

Final Drive Housing

1. Using three spacers [20 mm (0.79 in)], mount final drive assembly on Tool.
   Tool number:
   KV38100800 (J34310), (J25604-01)

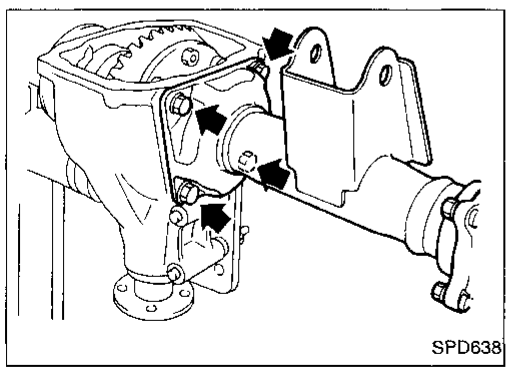

2. Remove extension tube and differential side shaft assembly.

Final Drive Housing (Cont'd)

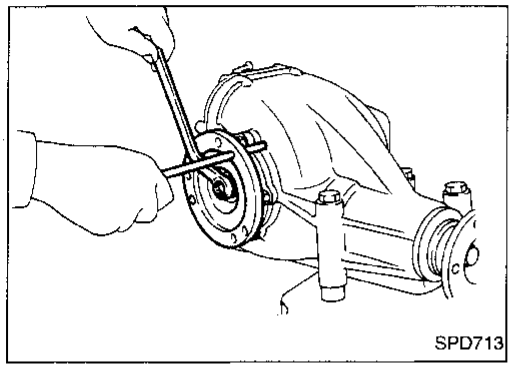

3. Remove differential side flange.

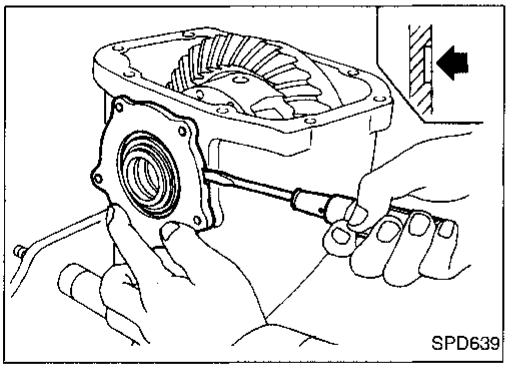

4. Mark side retainers for identification. Remove side retainers.

Be careful not to confuse right and left side retainers and shims.

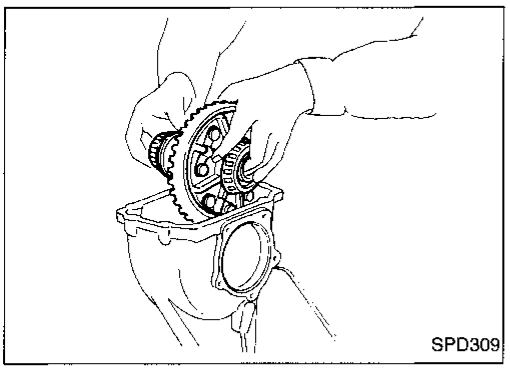

5. Extract differential case from final drive housing.

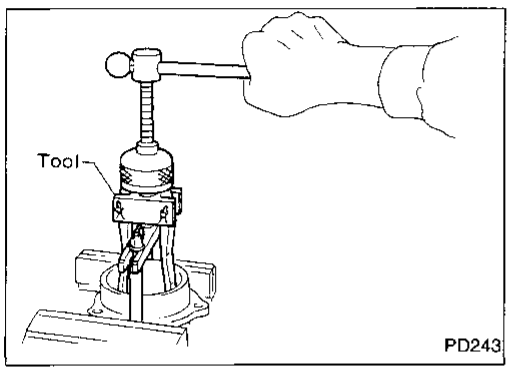

6. Remove side outer races.
   Tool number: ST33290001 (J25810-A)

Keep the side bearing outer races together with their respective inner cones — do not mix them up.

7. Remove side oil seal.

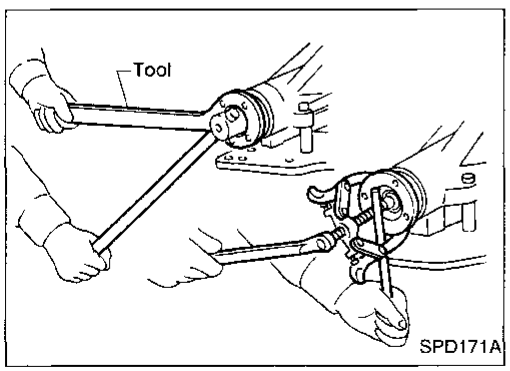

8. Loosen drive pinion nut.
   Tool number: ST38060002 (J34311)
9. Remove companion flange with puller.

Final Drive Housing (Cont'd)

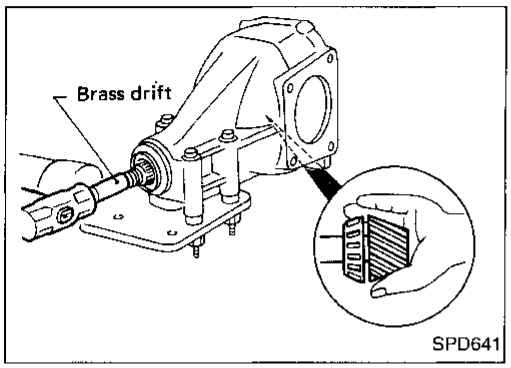

10. Take out drive pinion together with pinion rear bearing inner cone, drive pinion bearing spacer and pinion bearing adjusting washer.
11. Remove front oil seal and pinion front bearing inner cone.

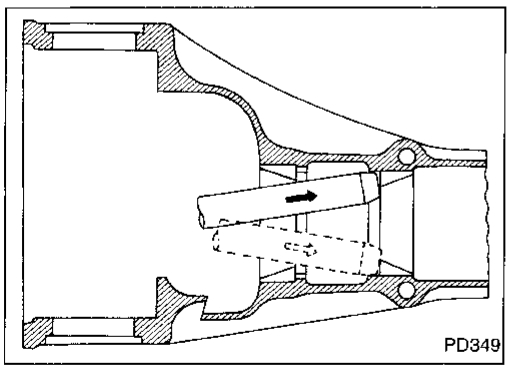

12. Remove pinion front and rear bearing outer races with brass drift.

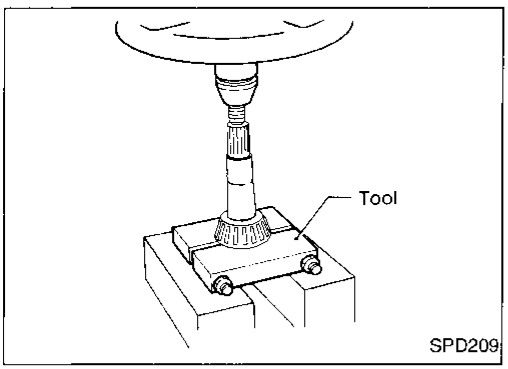

13. Remove pinion rear bearing inner cone and drive pinion adjusting washer.
    Tool number: ST30031000 (J22912-01)

Differential Case

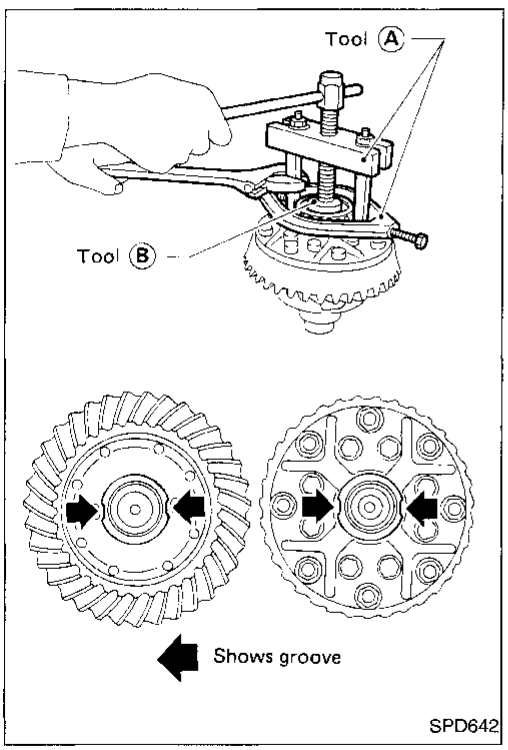

1. Remove side bearing inner cones.

To prevent damage to bearing, engage puller jaws in grooves.

Tool numbers:

Ⓐ ST33051001 (J22888-20)
Ⓑ ST33061000 (J8107-2)

Differential Case (Cont'd)

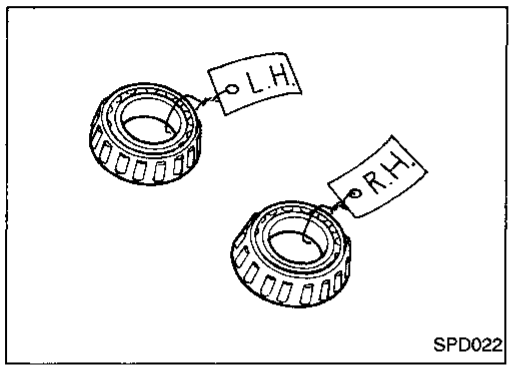

SPD022

Be careful not to confuse the right and left hand parts.

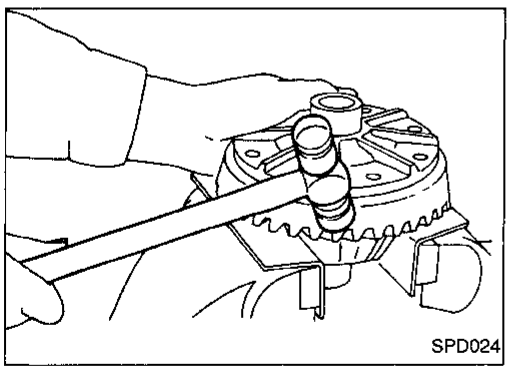
SPD024

2. Loosen ring gear bolts in a criss-cross fashion.
3. Tap ring gear off differential case with a soft hammer.

Tap evenly all around to keep ring gear from binding.

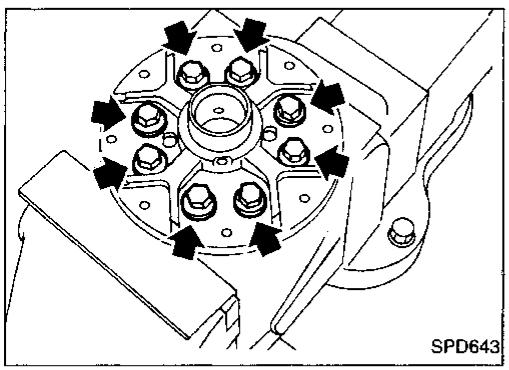
SPD643

4. Separate differential case LH and RH.

Put match marks on both differential case LH and RH sides prior to separating them.

Extension Tube and Differential Side Shaft

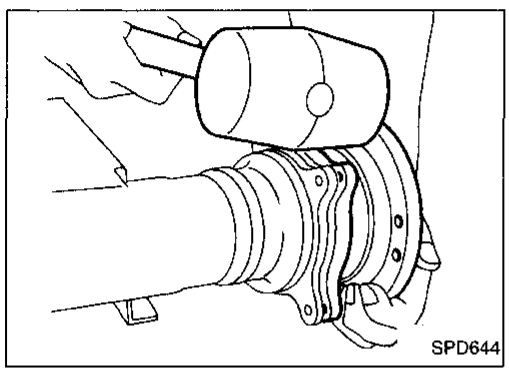
SPD644

1. Remove differential side shaft assembly from extension tube.

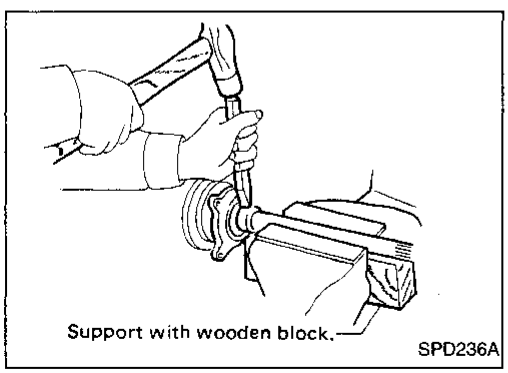

SPD236A

2. Cut rear axle bearing collar with cold chisel. Be careful not to damage differential side shaft.

Extension Tube and Differential Side Shaft (Cont'd)

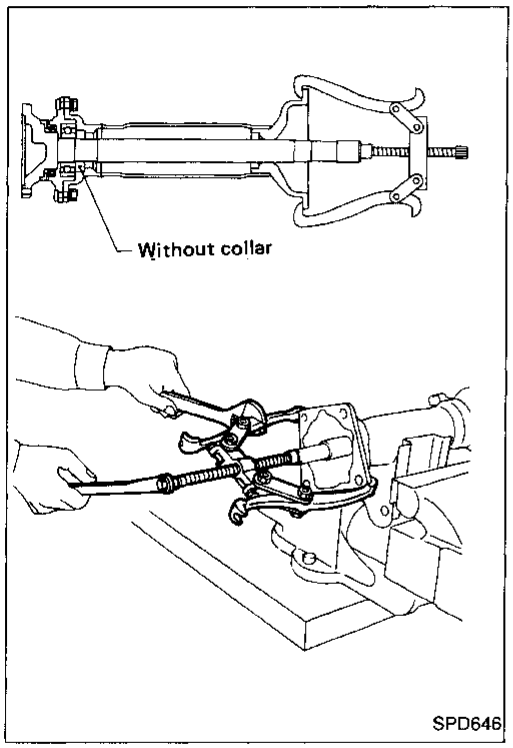

3. Reinstall differential side shaft into extension tube and secure with bolts. Remove rear axle bearing by drawing out differential side shaft from rear axle bearing with puller.

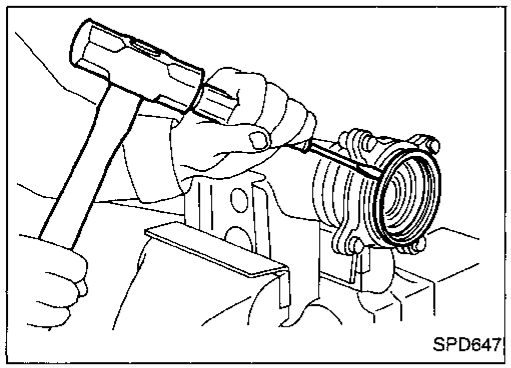

4. Remove grease seal.

Ring Gear and Drive Pinion

Check gear teeth for scoring, cracking or chipping.
If any damaged part is evident, replace ring gear and drive pinion as a set (hypoid gear set).

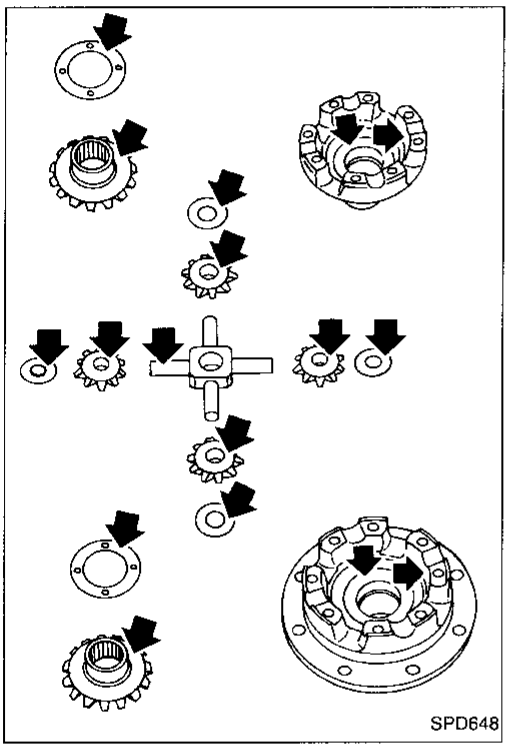

Differential Case Assembly

Check mating surfaces of differential case, side gears, pinion mate gears, pinion mate shaft and thrust washers.

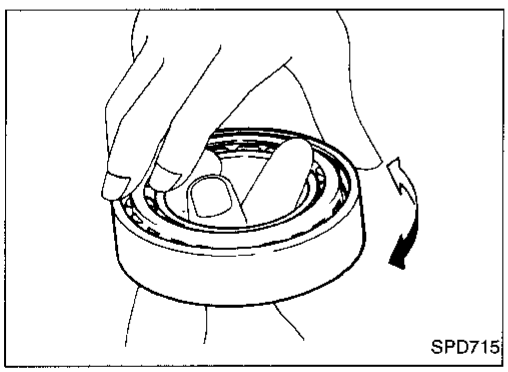

Bearing

1. Thoroughly clean bearing.
2. Check bearing for wear, scratches, pitting or flaking.
   Check tapered roller bearing for smooth rotation. If damaged, replace outer race and inner cone as a set.

For quiet and reliable final drive operation, the following five adjustments must be made correctly:
1. Side bearing preload
2. Pinion gear height
3. Pinion bearing preload
4. Ring gear-to-pinion backlash. Refer to "ASSEMBLY", PD-33.
5. Ring and pinion gear tooth contact pattern.

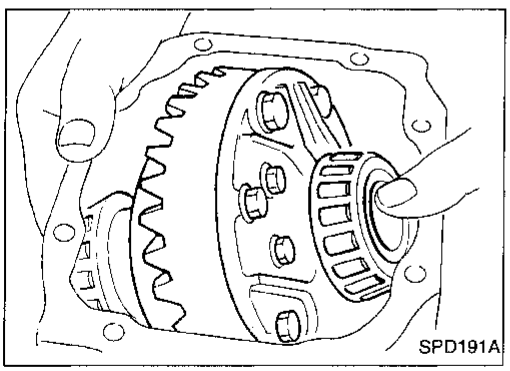

Side Bearing Preload

A selection of carrier side retainer adjusting shims is required for successful completion of this procedure.

1. Make sure all parts are clean. Also make sure the bearings are well lubricated with light oil or type "DEXRON™" automatic transmission fluid.
2. Install differential carrier and side bearing assembly into the final drive housing.

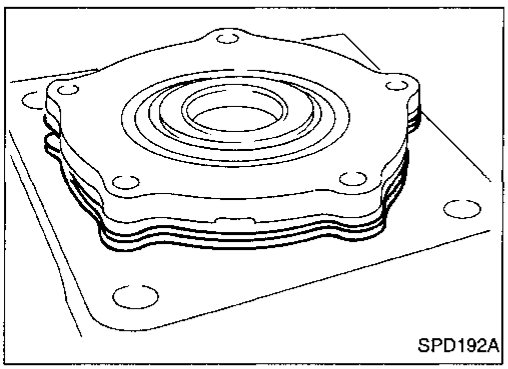

3. Place all of the original side retainer adjusting shims onto the side bearing retainer that goes at the ring gear end of the carrier.

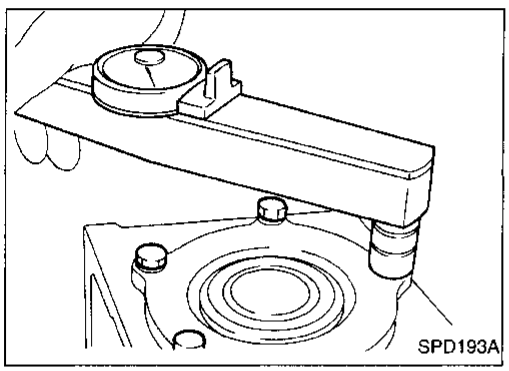

4. Install both bearing retainers onto the final drive housing and torque the retainer bolts.
   Bolt torque specification:
   : 9 - 12 N·m (0.9 - 1.2 kg-m, 78 - 104 in-lb)

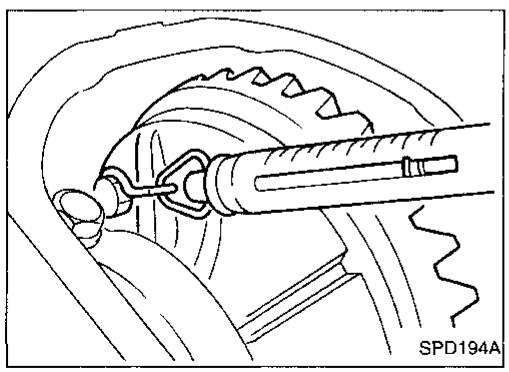

5. Turn the carrier several times to seat the bearings.
6. Measure the carrier turning torque with a spring gauge, J8129, at the ring gear retainer bolt.
   Turning torque specification:
   34.3 - 39.2 N (3.5 - 4.0 kg, 7.7 - 8.8 lb)
   of pulling force at the ring gear bolt

Side Bearing Preload (Cont'd)

7. If the turning torque measured is incorrect, establish the correct bearing preload by adding to or subtracting from the total amount of shim thickness.
- Increase shim thickness to decrease turning torque on the carrier.
- Decrease shim thickness to increase turning torque on the carrier.

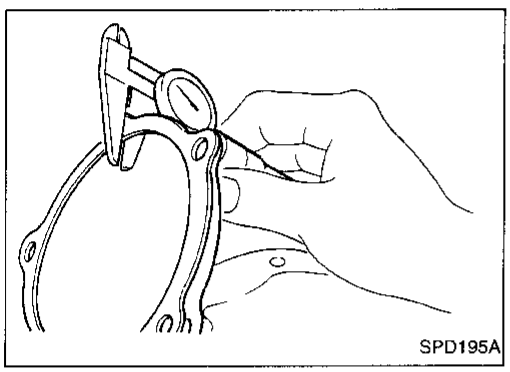
SPD195A

8. Record the correct, selected total thickness of the side retainer adjusting shims, and remove the carrier and bearings from the final drive housing. Save all shims for later re-use.

Pinion Gear Height and Pinion Bearing Preload

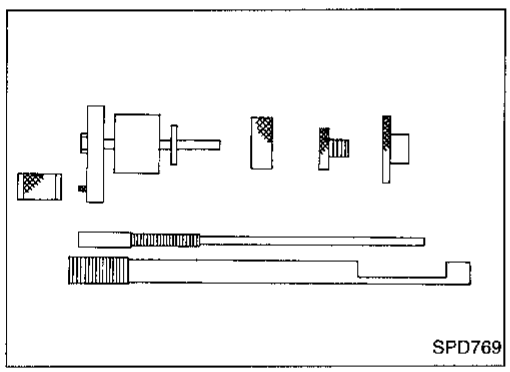
SPD769

1. Make sure all parts are clean and that the bearings are well lubricated.
2. Assemble the pinion gear bearings into the pinion pre-load shim selector tool, J34309.
- **Front Pinion Bearing** — make sure the J34309-3 front pinion bearing seat is secured tightly against the J34309-2 gauge anvil. Then turn the front pinion bearing pilot, J34309-7, to secure the bearing in its proper position.

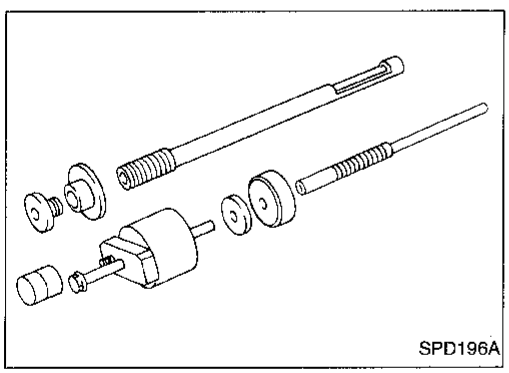
SPD196A

- **Rear Pinion Bearing** — the rear pinion bearing pilot, J34309-8, is used to center the rear pinion bearing only. The rear pinion bearing locking seat, J34309-4, is used to lock the bearing to the assembly.

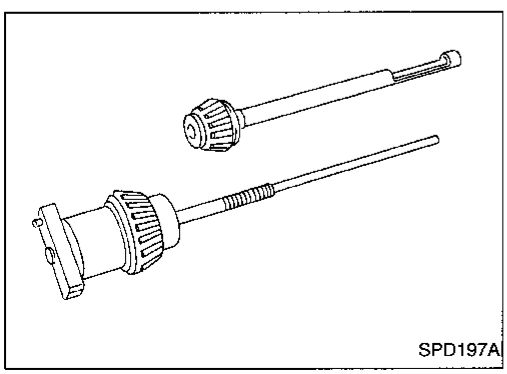
SPD197A

Pinion Gear Height and Pinion Bearing Preload (Cont'd)

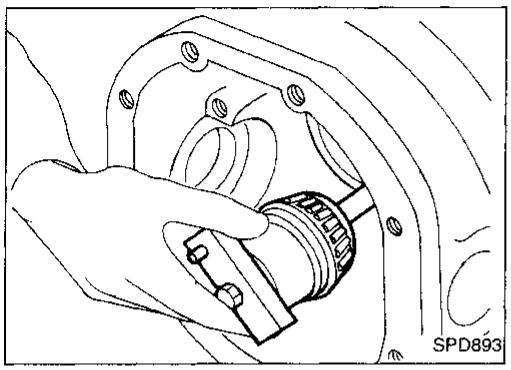

3. Place the pinion preload shim selector tool gauge screw, J34309-1, with the pinion rear bearing inner cone installed, into the final drive housing.

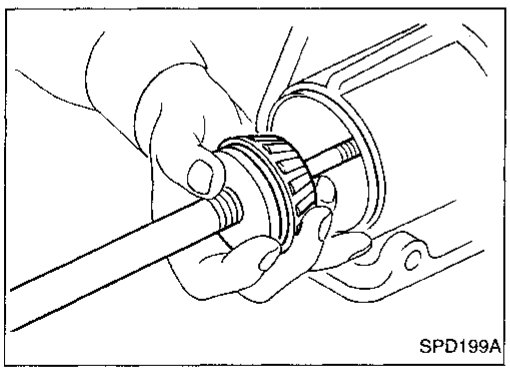

4. Install the J34309-2 gauge anvil with the front pinion bearing into the final drive housing and assemble it to the J34309-1 gauge screw. Make sure that the J34309-16 gauge plate will turn a full 360 degrees, and tighten the two sections by hand.

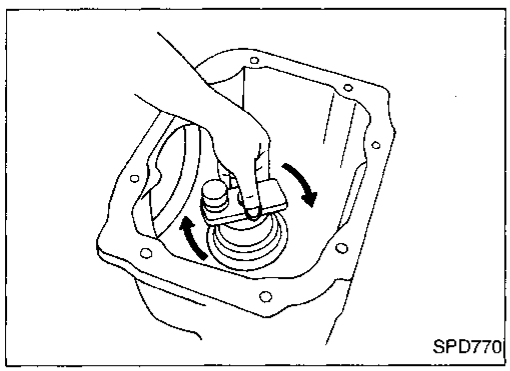

5. Turn the assembly several times to seat the bearings.

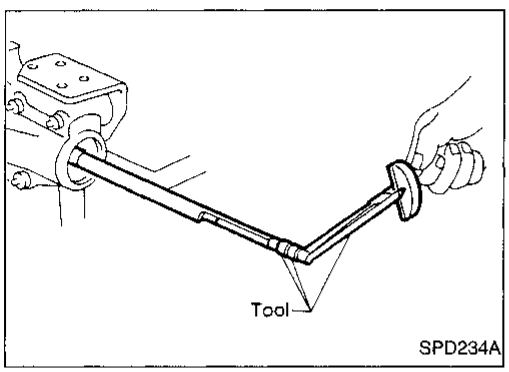

6. Measure the turning torque at the end of the J34309-2 shaft using Tool.
   Tool number: ST3127S000 (J25765-A)
   Turning torque specification:
   0.6 - 1.0 N·m (6 - 10 kg-cm, 5.2 - 8.7 in-lb)
7. Place the J34309-10 "R180A" pinion height adapter onto the gauge plate and tighten it by hand.

CAUTION:
Make sure all machined surfaces are clean.

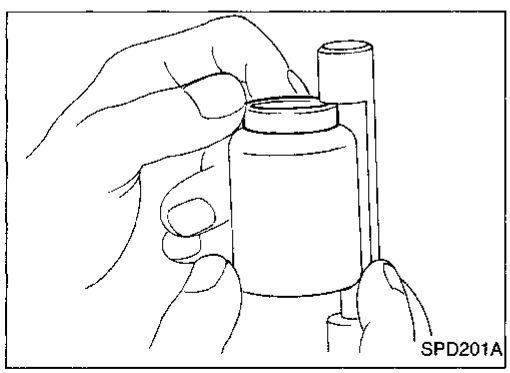

PINION BEARING PRELOAD WASHER SELECTION

8. Place the solid pinion bearing adjusting spacer squarely into the recessed portion of the J34309-2 gauge anvil.

Pinion Gear Height and Pinion Bearing Preload (Cont'd)

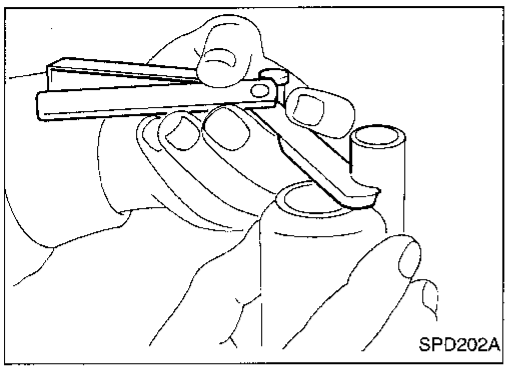
SPD202A

9. Select the correct thickness of pinion bearing preload adjusting washer using a standard gauge of 6 mm (0.24 in) and J34309-101 feeler gauge. The exact total measure you get with the gauges is the thickness of the adjusting washer required. Select the correct washer.
   Drive pinion bearing adjusting washer:
   Refer to SDS, PD-103.
10. Set the selected pinion bearing preload adjusting washer aside for use when assembling the pinion and bearings into the final drive housing.

PINION HEIGHT ADJUSTING WASHER SELECTION

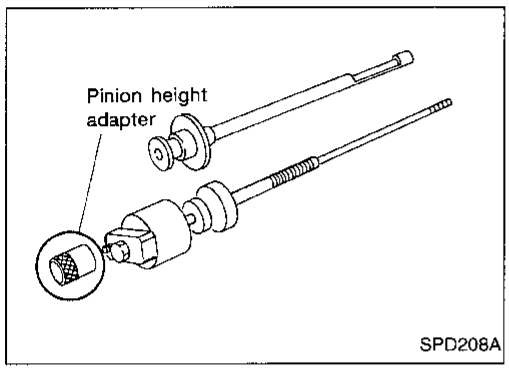

SPD208A

11. Place the J34309-10 pinion height adapter onto the gauge plate and tighten by hand.

CAUTION:
Make sure all machined surfaces are clean.

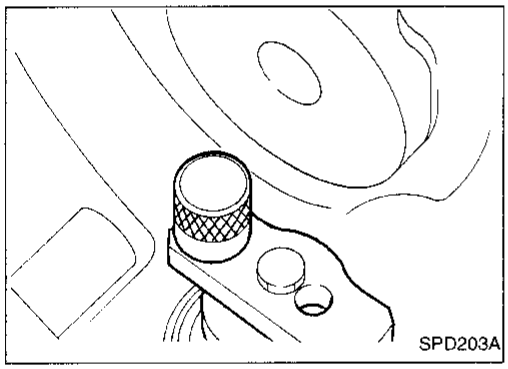
SPD203A

12. Position firmly the side bearing discs, J25269-4, and arbor into the side bearing bores.

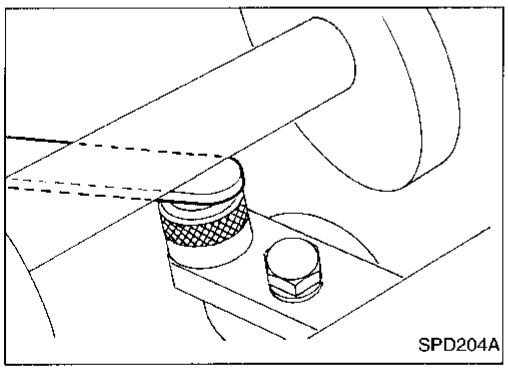
SPD204A

13. Select the correct standard pinion height adjusting washer thickness using a standard gauge of 3 mm (0.12 in) and J34309-101 feeler gauge. Measure the distance between the J34309-10 "R180A" pinion height adapter and the arbor.

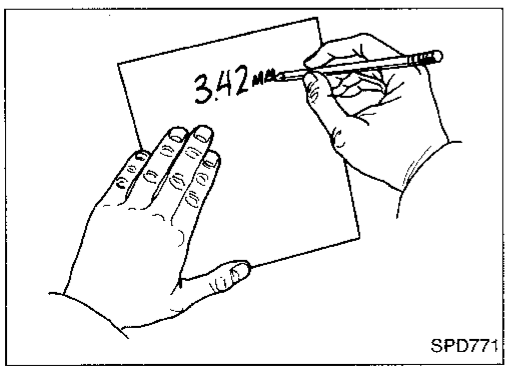

SPD771

14. Write down your exact total measurement.

Pinion Gear Height and Pinion Bearing Preload (Cont'd)

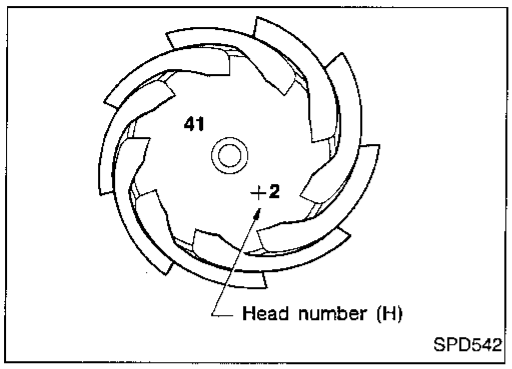

15. Correct the pinion height washer size by referring to the "pinion head number".

There are two numbers painted on the pinion gear. The first one refers to the pinion and ring gear as a matched set and should be the same as the number on the ring gear. The second number is the "pinion head height number", and it refers to the ideal pinion height from standard for quietest operation. Use the following chart to determine the correct pinion height washer.

Pinion Head Height Number	Add or Remove from the Standard Pinion Height Washer Thickness Measurement
–6	Add 0.06 mm (0.0024 in)
–5	Add 0.05 mm (0.0020 in)
–4	Add 0.04 mm (0.0016 in)
–3	Add 0.03 mm (0.0012 in)
–2	Add 0.02 mm (0.0008 in)
–1	Add 0.01 mm (0.0004 in)
0	Use the selected washer thickness
+1	Subtract 0.01 mm (0.0004 in)
+2	Subtract 0.02 mm (0.0008 in)
+3	Subtract 0.03 mm (0.0012 in)
+4	Subtract 0.04 mm (0.0016 in)
+5	Subtract 0.05 mm (0.0020 in)
+6	Subtract 0.06 mm (0.0024 in)

16. Select the correct pinion height washer.
    Drive pinion height adjusting washer:
    Refer to SDS, PD-103.

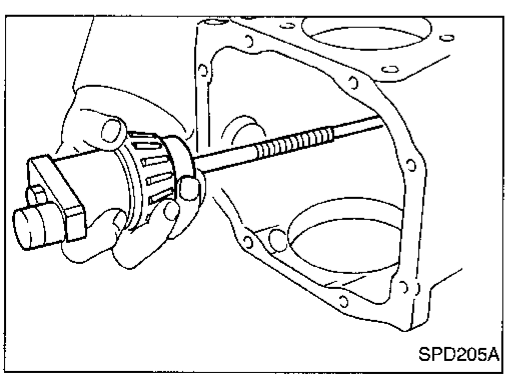

17. Remove the J34309 pinion preload shim selector tool from the final drive housing and disassemble to retrieve the pinion bearings.

Tooth Contact

Gear tooth contact pattern check is necessary to verify correct relationship between ring gear and drive pinion.
Hypoid gear sets which are not positioned properly may be noisy, or have short life, or both. With a pattern check, the most desirable contact for low noise level and long life can be assured.

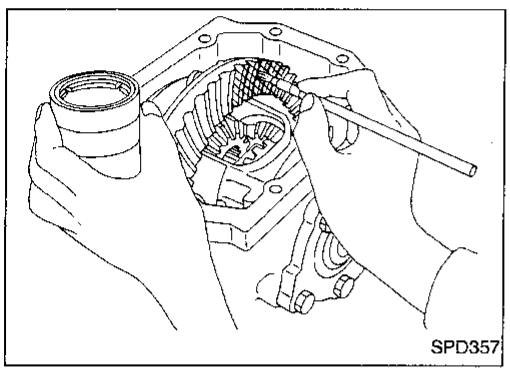

1. Thoroughly clean ring gear and drive pinion teeth.
2. Sparingly apply a mixture of powdered ferric oxide and oil or equivalent to 3 or 4 teeth of ring gear drive side.

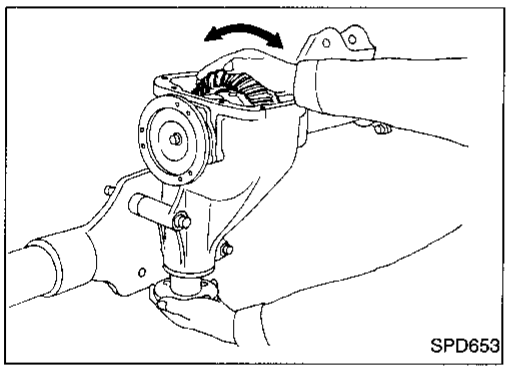

3. Hold companion flange steady and rotate the ring gear in both directions.

Usually the pattern will be correct if you have calculated the shims correctly and the backlash is correct.
However, in rare cases you may have to use trial-and-error processes until you get a good tooth contact pattern.
The tooth pattern is the best indication of how well a differential has been set up.

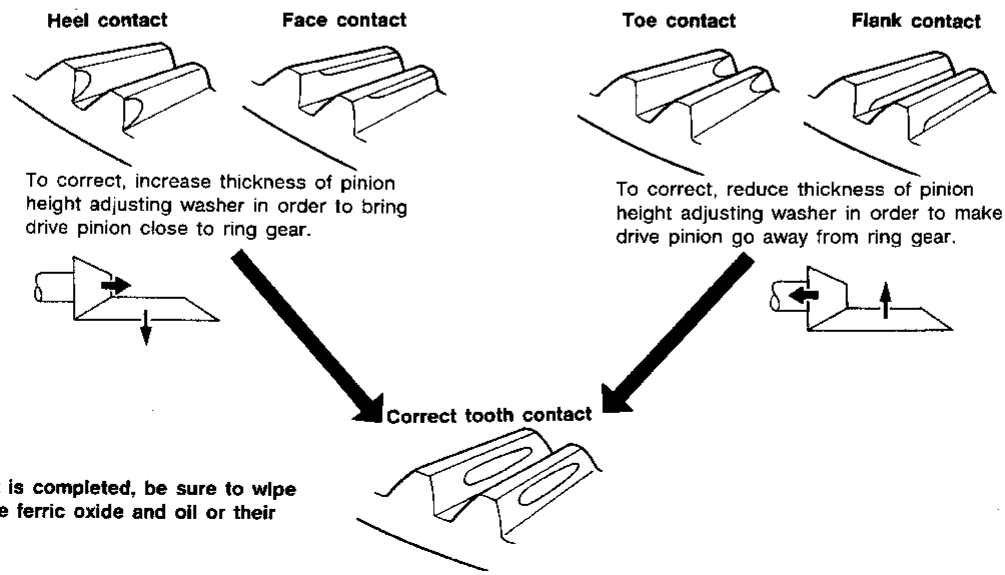

When adjustment is completed, be sure to wipe off completely the ferric oxide and oil or their equivalent.

SPD007

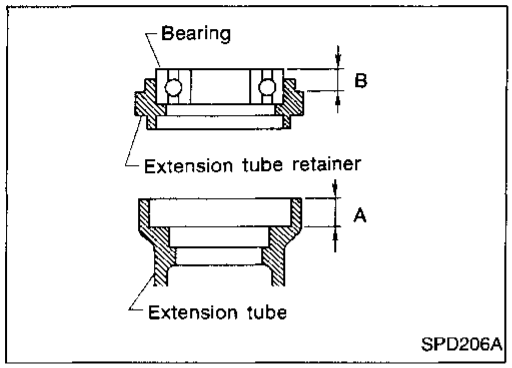

Extension Tube and Differential Side Shaft

1. Measure rear axle bearing end play.
   Rear axle bearing end play (A - B):
   0.1 mm (0.0039 in) or less
   The end play can be adjusted with bearing adjusting shim.
   Available bearing adjusting shims:
   Refer to SDS, PD-103.

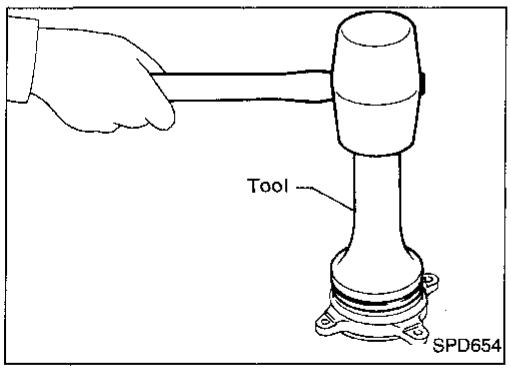

2. Install grease seal.
   Tool number: (J35764)

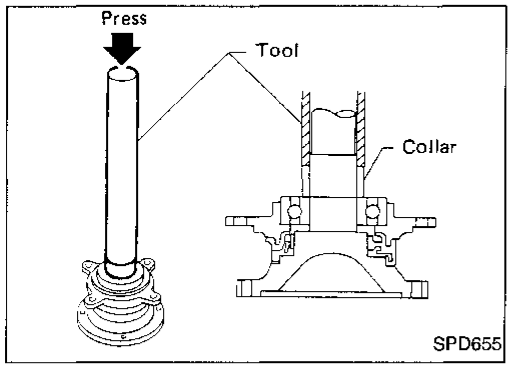

3. Install extension tube retainer, rear axle bearing and rear axle shaft bearing collar on differential side shaft.
4. Install differential side shaft assembly into extension tube.

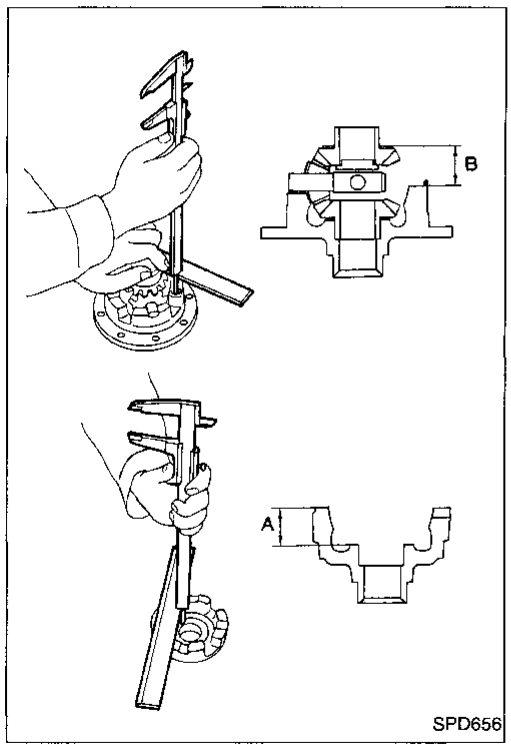

Differential Case

1. Measure clearance between side gear thrust washer and differential case.
   Clearance between side gear thrust washer and differential case (A - B):
   Less than 0.15 mm (0.0059 in)
   The clearance can be adjusted with side gear thrust washer.
   Available side gear thrust washers:
   Refer to SDS, PD-103.
2. Apply gear oil to gear tooth surfaces and thrust surfaces and check to see they turn properly.

Differential Case (Cont'd)

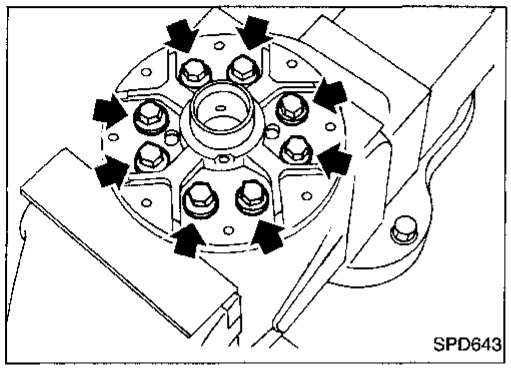
SPD643

3. Install differential case LH and RH.

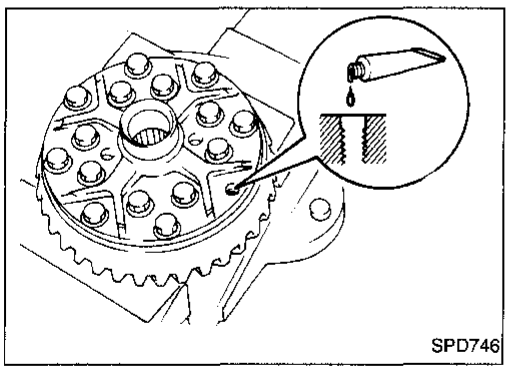
SPD746

4. Place differential case on ring gear.
5. Apply locking agent [Locktite (stud lock) or equivalent] to ring gear bolts, and install them.

Tighten bolts in a criss-cross fashion, lightly tapping bolt head with a hammer.

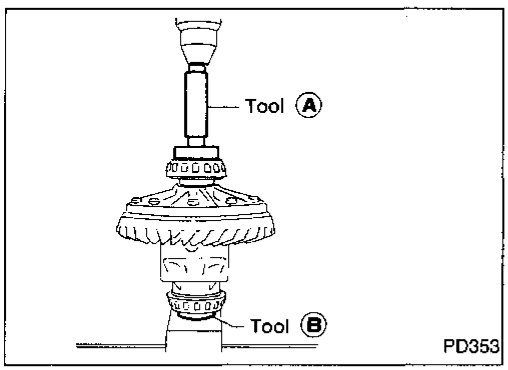

PD353

6. Press-fit side bearing inner cones on differential case with Tools.
   Tool numbers:
   Ⓐ ST33230000 (J25805-01)
   Ⓑ ST33061000 (J8107-2)

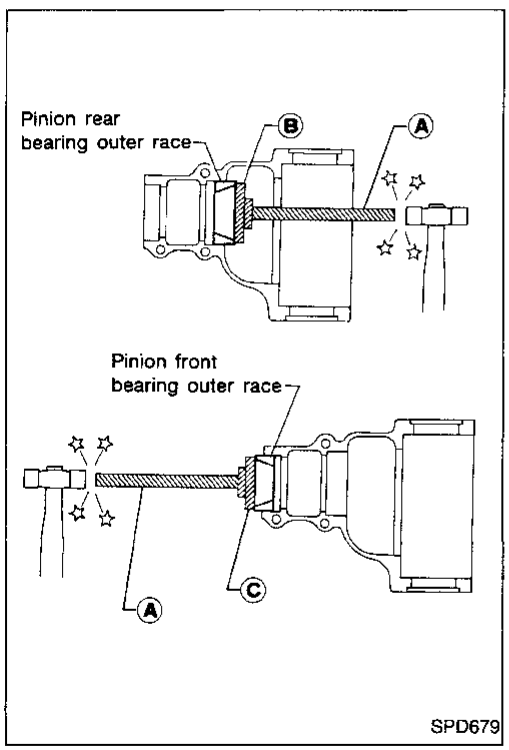

SPD679

Final Drive Housing

1. Press-fit front and rear bearing outer races with Tools.
   Tool numbers:
   Ⓐ ST30611000 (J25742-1)
   Ⓑ ST30621000 (J25742-5)
   Ⓒ ST30701000 (J25742-2)

Final Drive Housing (Cont'd)

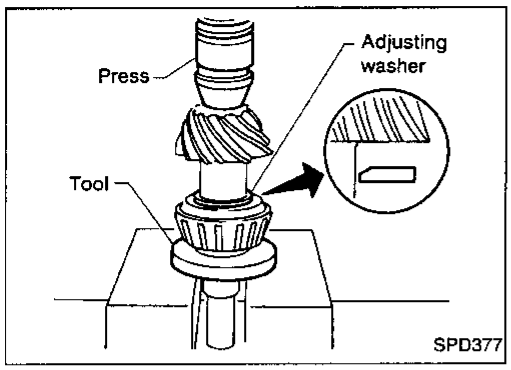

2. Select pinion bearing adjusting washer and drive pinion bearing spacer. Refer to "ADJUSTMENT", PD-25.
3. Install drive pinion height adjusting washer in drive pinion, and press-fit pinion rear bearing inner cone in it, using press and Tool.
   Tool number: ST30901000 (J26010-01)

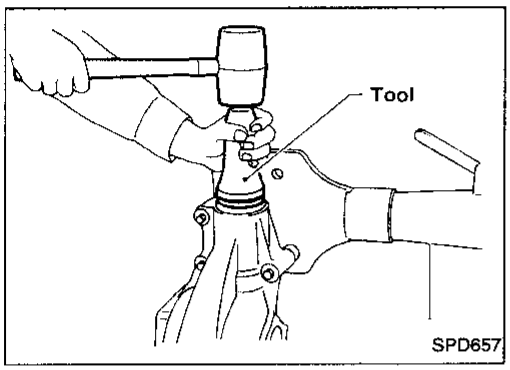

4. Place pinion front bearing inner cone in final drive housing.
5. Apply multi-purpose grease to cavity at sealing lips of oil seal. Install front oil seal.
   Tool number: ST30720000 (J25405)

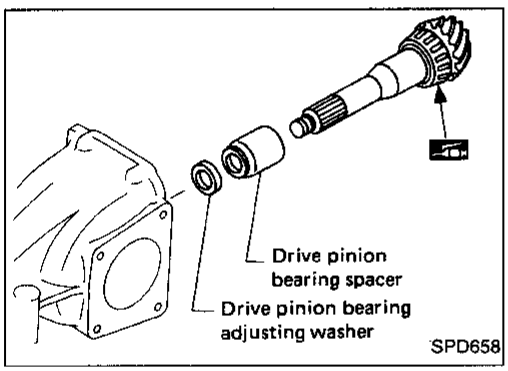

6. Place drive pinion bearing spacer, pinion bearing adjusting washer and drive pinion in final drive housing.

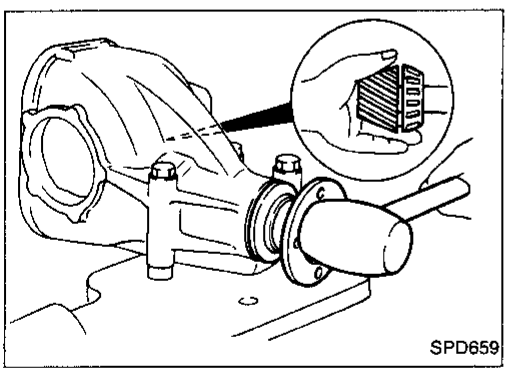

7. Insert companion flange into drive pinion by tapping the companion flange with a soft hammer.

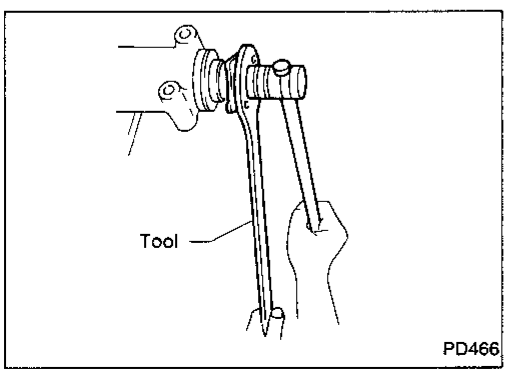

8. Tighten pinion nut to the specified torque.

The threaded portion of drive pinion and pinion nut should be free from oil or grease.

Tool number: ST38060002 (J34311)

Final Drive Housing (Cont'd)

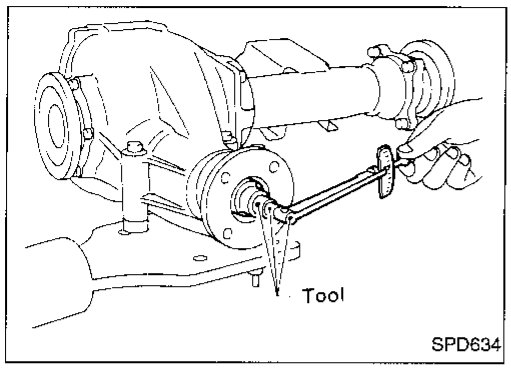

9. Turn drive pinion in both directions several revolutions and measure pinion bearing preload.
   Tool number: ST3127S000 (J25765-A)
   Pinion bearing preload:
   1.1 - 1.7 N·m (11 - 17 kg-cm, 9.5 - 14.8 in-lb)

When pinion bearing preload is outside the specifications, replace pinion bearing adjusting washer and spacer with a different thickness.

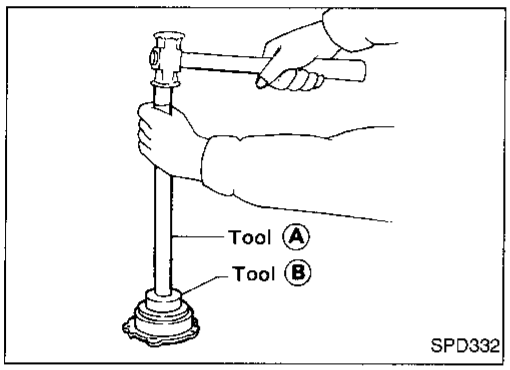

10. Select side retainer adjusting shim.
    Refer to "ADJUSTMENT", PD-24.
11. Press-fit side bearing outer race into side retainer.
    Tool numbers:
    Ⓐ ST30611000 (J25742-1)
    Ⓑ ST30621000 (J25742-5)

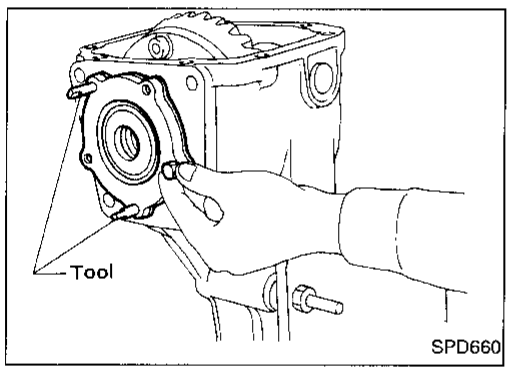

12. Install side oil seal to side retainer.
    Tool number: ST33270000 (J25809)
13. Install differential case assembly.
14. Place side retainer adjusting shims (refer to "ADJUSTMENT", PD-24), and O-ring on side retainer, and install them in final drive housing.
    Tool number: ST33720000 (J25817)

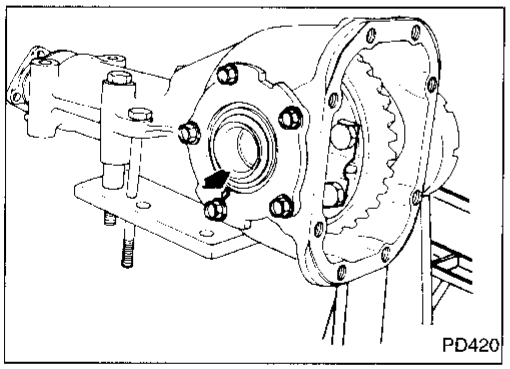

- Align arrows stamped on side retainer and final drive housing.

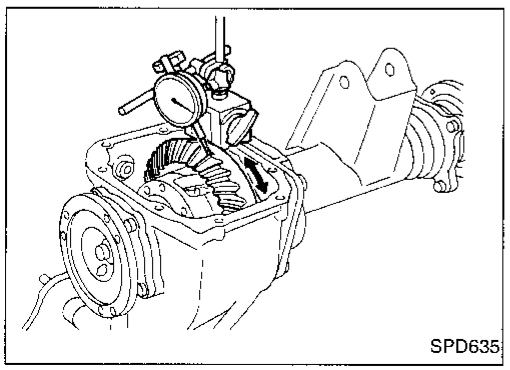

15. Measure ring gear-to-drive pinion backlash with a dial indicator.
    Ring gear-to-drive pinion backlash:
    0.13 - 0.18 mm (0.0051 - 0.0071 in)

- If backlash is too small, decrease thickness of right shim and increase thickness of left shim by the same amount.
  If backlash is too great, reverse the above procedure.

Never change the total amount of shims as it will change the bearing preload.

Final Drive Housing (Cont'd)

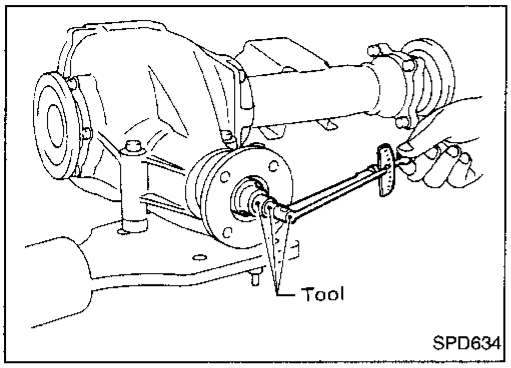

16. Check total preload with Tool.

When checking preload, turn drive pinion in both directions several times to set bearing rollers.

Tool number: ST3127S000 (J25765-A)
Total preload:
1.2 - 2.3 N·m
(12 - 23 kg-cm, 10 - 20 in-lb)

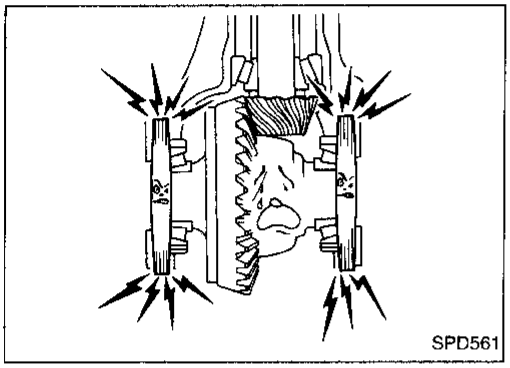

- If preload is too great, add the same amount of shim to each side.
- If preload is too small, remove the same amount of shim from each side.

Never add or remove a different number of shims for each side as it will change ring gear-to-drive pinion backlash.

17. Recheck ring gear-to-drive pinion backlash because increase or decrease in thickness of shims will cause change of ring gear to pinion backlash.

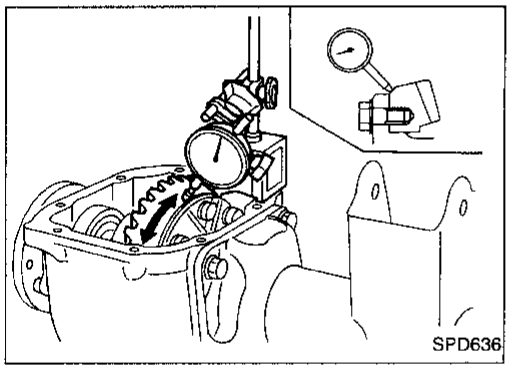

18. Check runout of ring gear with a dial indicator.

Runout limit:
0.05 mm (0.0020 in)

- If backlash varies excessively in different places, the variance may have resulted from foreign matter caught between the ring gear and the differential case.
- If the backlash varies greatly when the runout of the ring gear is within a specified range, the hypoid gear set or differential case should be replaced.

19. Check tooth contact. Refer to "ADJUSTMENT", PD-29.
20. Install rear cover and gasket.

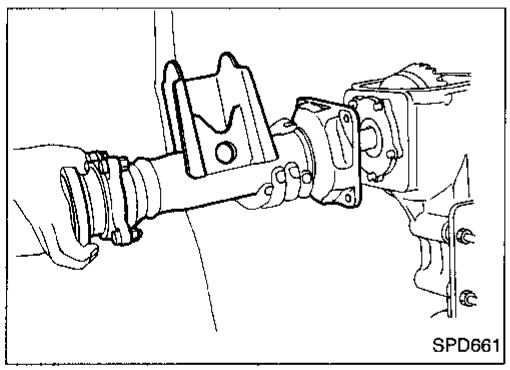

21. Install extension tube and differential side shaft assembly.

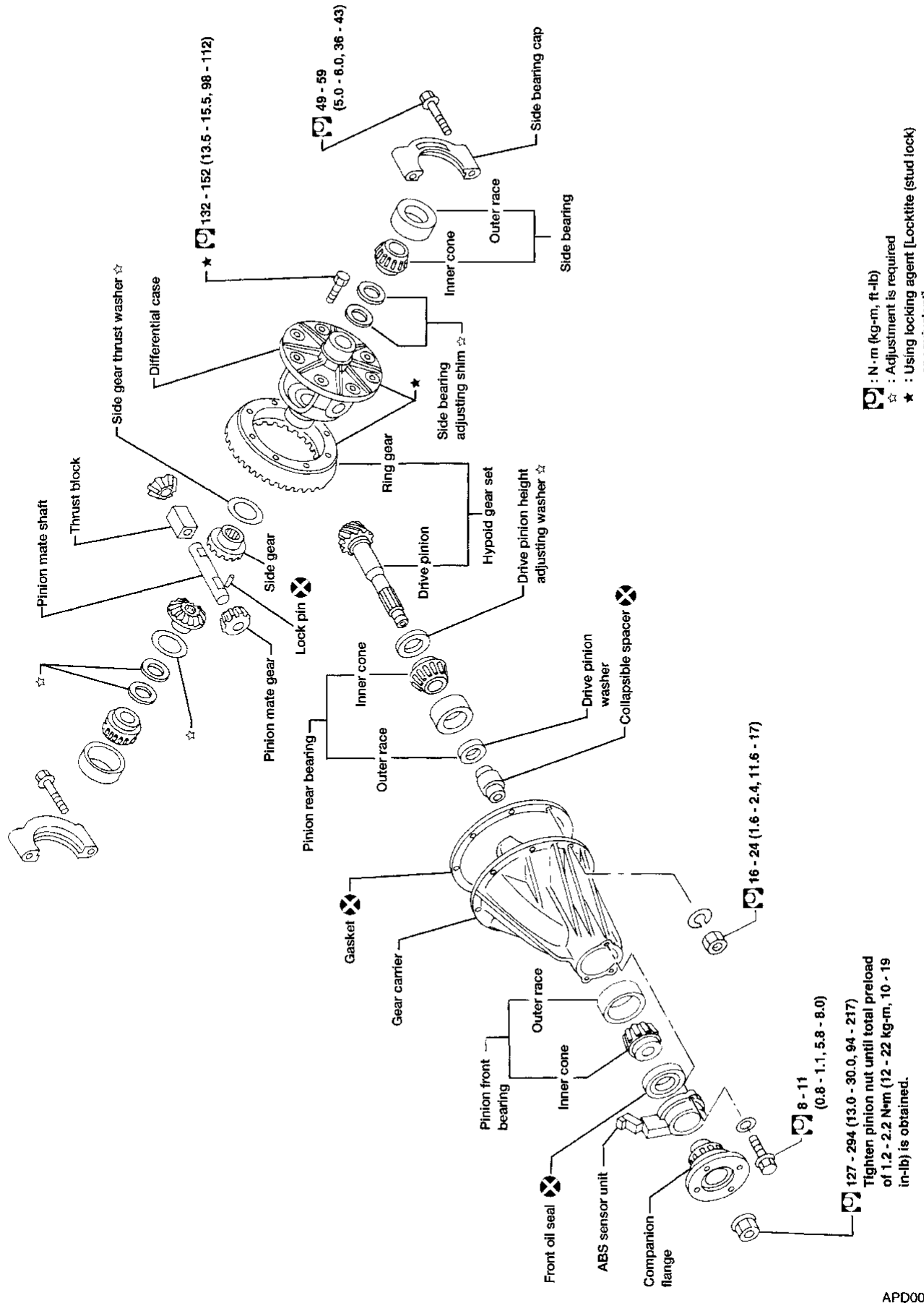
Side gear thrust washer ☆
Differential case
132 - 152 (13.5 - 15.5, 98 - 112)
49 - 59 (5.0 - 6.0, 36 - 43)
Side bearing cap
Outer race
Inner cone
Side bearing
Side bearing adjusting shim ☆
Ring gear
Hypoid gear set
Drive pinion
Drive pinion height adjusting washer ☆
Pinion mate shaft
Thrust block
Side gear
Lock pin
Pinion mate gear
Pinion rear bearing
Inner cone
Outer race
Drive pinion washer
Collapsible spacer
Gasket
Gear carrier
16 - 24 (1.6 - 2.4, 11.6 - 17)
Pinion front bearing
Outer race
Inner cone
8 - 11 (0.8 - 1.1, 5.8 - 8.0)
127 - 294 (13.0 - 30.0, 94 - 217)
Tighten pinion nut until total preload of 1.2 - 2.2 N·m (12 - 22 kg-m, 10 - 19 in-lb) is obtained.
Front oil seal
ABS sensor unit
Companion flange
: N·m (kg-m, ft-lb)
☆ : Adjustment is required
★ : Using locking agent [Locktite (stud lock) or equivalent]
APD006

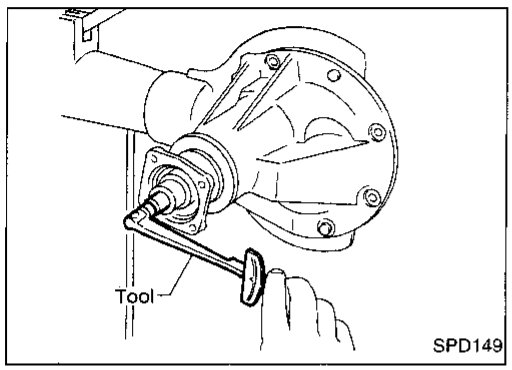

Pre-inspection

Before disassembling final drive, perform the following inspection.

- Total preload

a. Turn drive pinion in both directions several revolutions to seat bearing rollers correctly.

b. Check total preload with Tool.

Tool number: ST3127S000 (J25765-A)
Total preload:
1.2 - 2.2 N·m
(12 - 22 kg-cm, 10 - 19 in-lb)

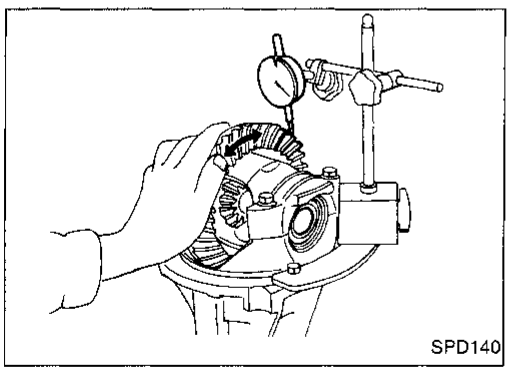

- Ring gear-to-drive pinion backlash
  Check backlash of ring gear with a dial indicator at several points.
  Ring gear-to-drive pinion backlash:
  0.13 - 0.18 mm (0.0051 - 0.0071 in)

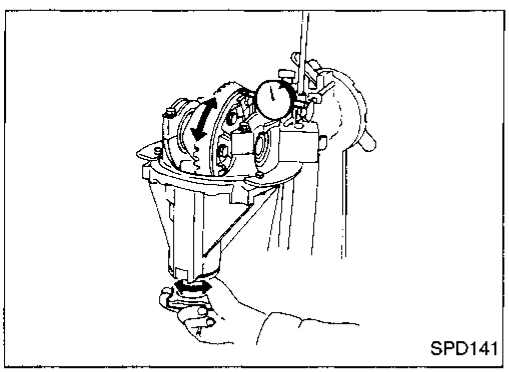

- Ring gear runout
  Check runout of ring gear with a dial indicator.
  Runout limit:
  0.08 mm (0.0031 in)

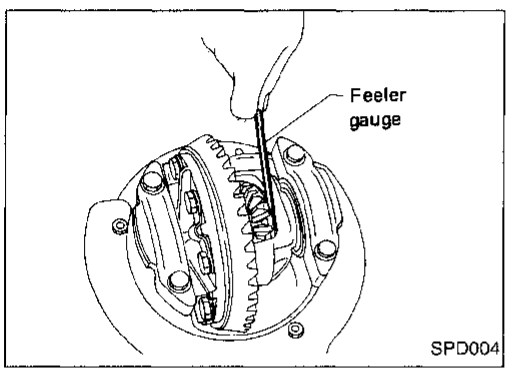

- Tooth contact
  Check tooth contact. Refer to "ADJUSTMENT", PD-51.
- Side gear-to-pinion mate gear backlash
  Measure clearance between side gear thrust washer and differential case with a feeler gauge.
  Clearance between side gear thrust washer and differential case:
  Less than 0.15 mm (0.0059 in)

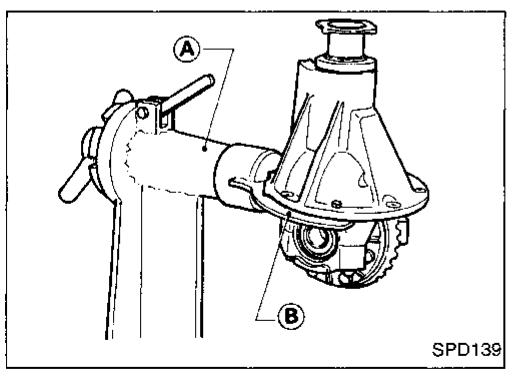

Differential Carrier

1. Mount differential carrier on Tools.
   Tool numbers:
   Ⓐ ST0501S000 (—)
   Ⓑ ST06310000 (J25602-01)

Differential Carrier (Cont'd)

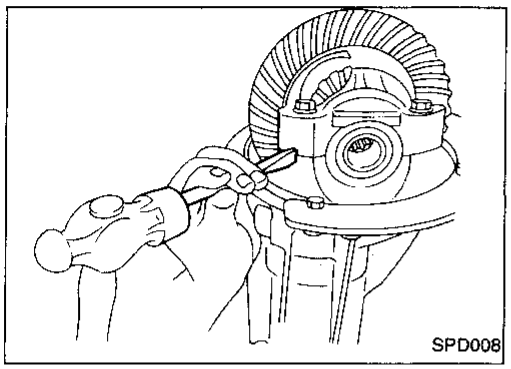

2. Put match marks on one side of side bearing cap with paint or punch to ensure that it is replaced in proper position during reassembly.

Bearing caps are line-bored during manufacture and should be put back in their original places.

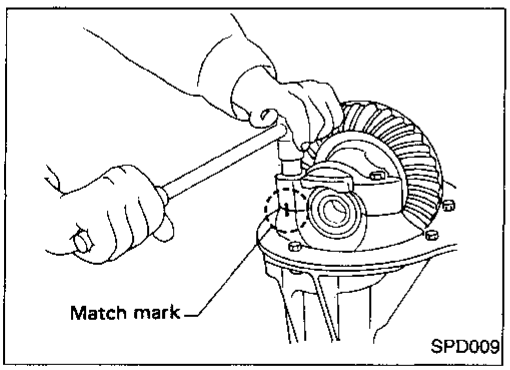

3. Remove side bearing caps.

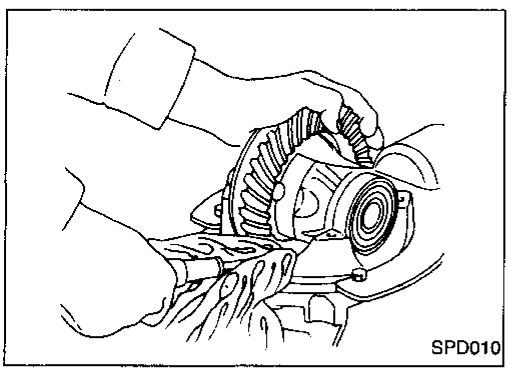

4. Remove differential case assembly with a pry bar.

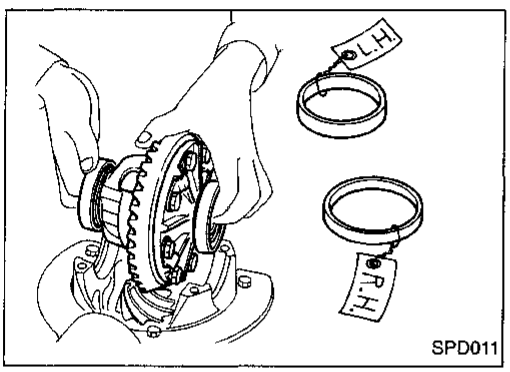

Keep the side bearing outer races together with their respective inner cones — do not mix them up.

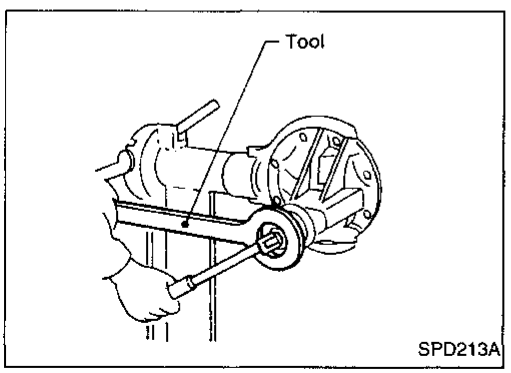

5. Remove drive pinion nut with Tool.
   Tool number: ST38060002 (J34311)
6. Remove companion flange with puller.

Differential Carrier (Cont'd)

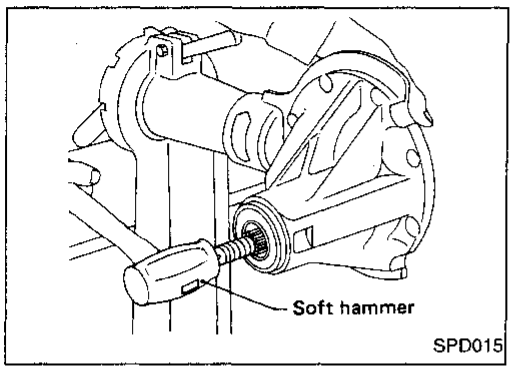

7. Remove drive pinion with soft hammer.
8. Remove oil seal.

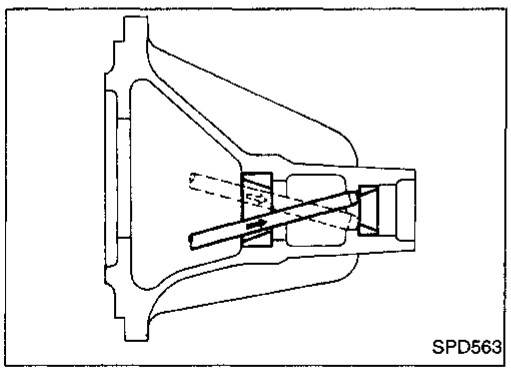

9. Remove pinion bearing outer races with a brass drift.

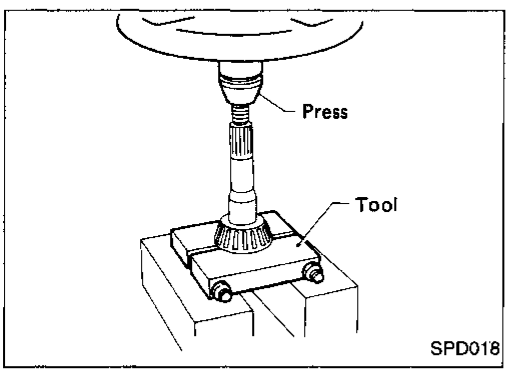

10. Pull out rear bearing inner cone with a press and Tool.
    Tool number: ST30031000 (J22912-01)

Differential Case

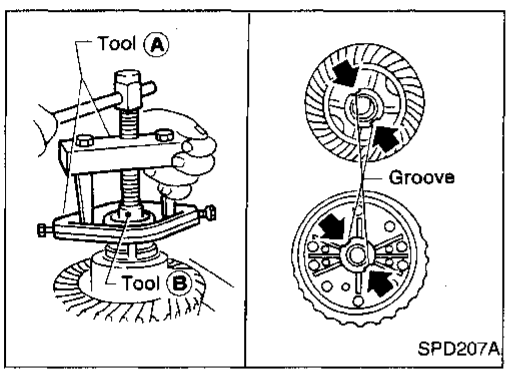

1. Remove side bearing inner cones.

To prevent damage to bearing, engage puller jaws in groove.

Tool numbers:

Ⓐ ST33051001 (J22888-20)
Ⓑ ST33061000 (J8107-2)

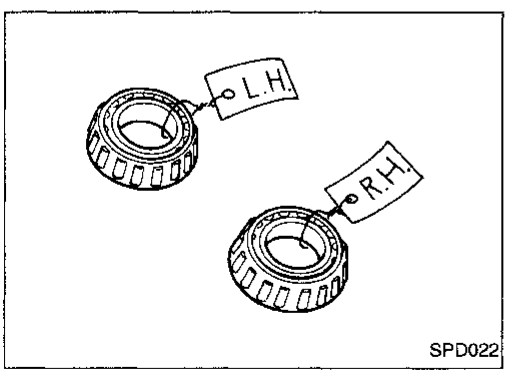

Be careful not to confuse the left and right hand parts.

Differential Case (Cont'd)

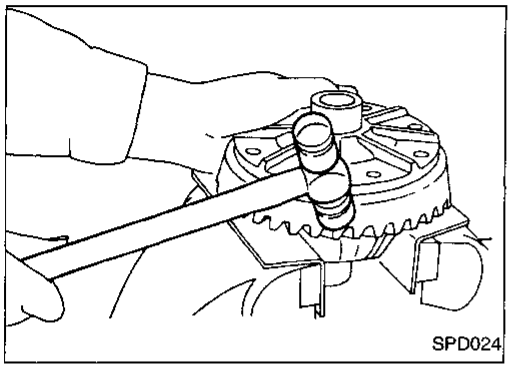

2. Spread out lock straps and loosen ring gear bolts in a criss-cross fashion.
3. Tap ring gear off differential case with a soft hammer.

Tap evenly all around to keep ring gear from binding.

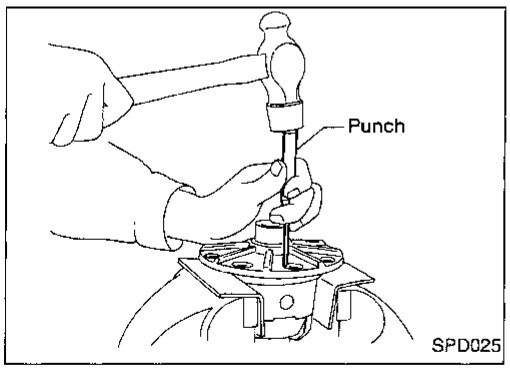

4. Drive out pinion mate shaft lock pin, with Tool from ring gear side.

Lock pin is calked at pin hole mouth on differential case.

Ring Gear and Drive Pinion

Check gear teeth for scoring, cracking or chipping.
If any damaged part is evident, replace ring gear and drive pinion as a set (hypoid gear set).

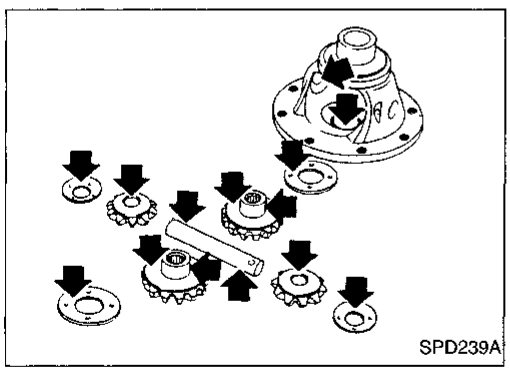

Differential Case Assembly

Check mating surfaces of differential case, side gears, pinion mate gears, pinion mate shaft, and thrust washers.

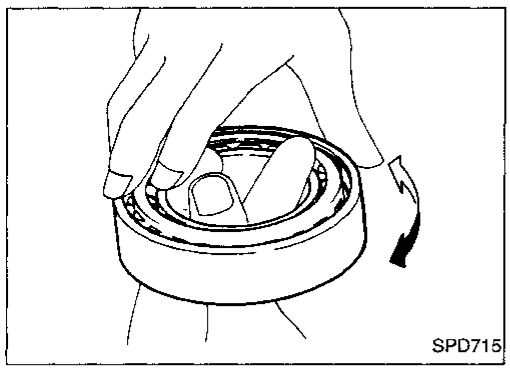

Bearing

1. Thoroughly clean bearing.
2. Check bearings for wear, scratches, pitting or flaking.
   Check tapered roller bearing for smooth rotation. If damaged, replace outer race and inner cone as a set.

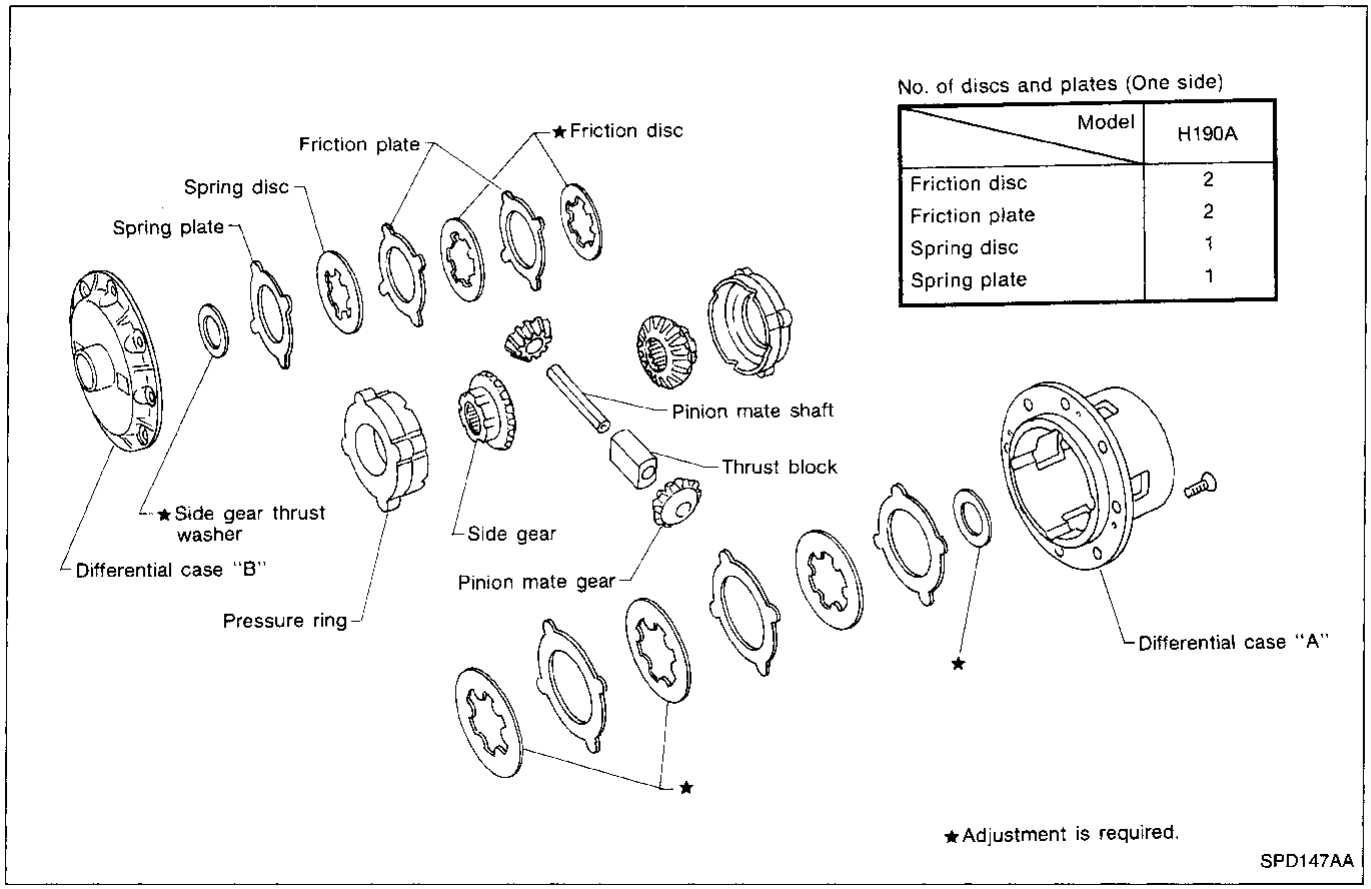

No. of discs and plates (One side)

Model	H190A
Friction disc	2
Friction plate	2
Spring disc	1
Spring plate	1

CAUTION:
Do not run engine when only one wheel (rear) is off the ground.

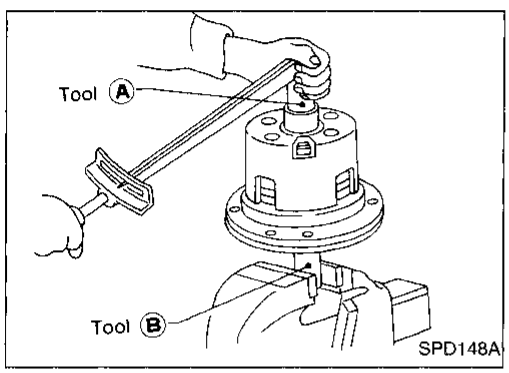

Preparation for Disassembly

CHECKING DIFFERENTIAL TORQUE

Measure differential torque with Tools.
If it is not within the specifications, inspect components of limited slip differential.

Differential torque:
New parts
69 - 118 N·m (7 - 12 kg-m, 51 - 87 ft-lb)
Used parts
39 - 74 N·m (4 - 7.5 kg-m, 29 - 54 ft-lb)

Tool number:
Ⓐ KV38105110 (—)
Ⓑ KV38105120 (—)

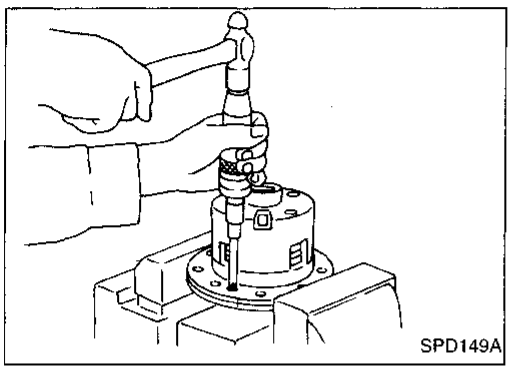

Disassembly

1. Remove couple screws.
2. Separate differential cases A and B. Draw out component parts (disc and plates etc.).

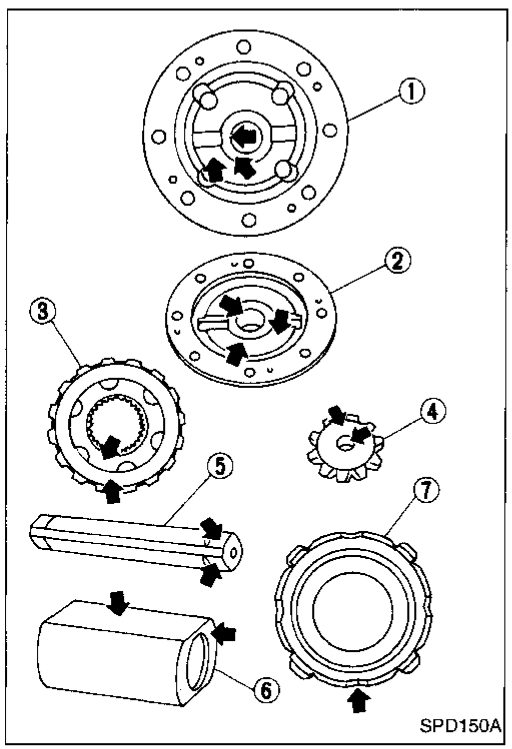

Inspection

CONTACT SURFACES

1. Clean the disassembled parts in suitable solvent and blow dry with compressed air.
2. If the following surfaces are found with burrs or scratches, smooth with oil stone.
   ① Differential case A
   ② Differential case B
   ③ Side gear
   ④ Pinion mate gear
   ⑤ Pinion mate shaft
   ⑥ Thrust block
   ⑦ Pressure ring

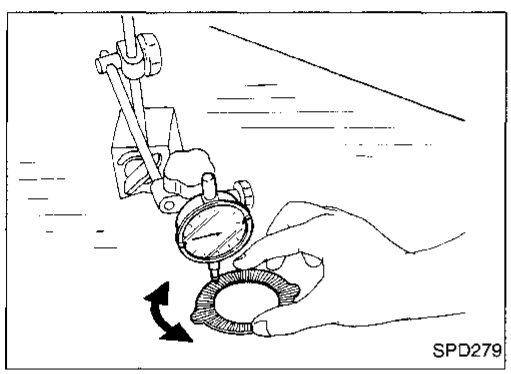

DISC AND PLATE

1. Clean the discs and plates in suitable solvent and blow dry with compressed air.
2. Inspect discs and plates for wear, nicks and burrs.
3. Check friction discs or plates for warpage.
   Maximum allowable warpage:
   0.08 mm (0.0031 in)
   If it exceeds limits, replace with a new plate to eliminate possibility of clutch slippage or sticking.

Inspection (Cont'd)

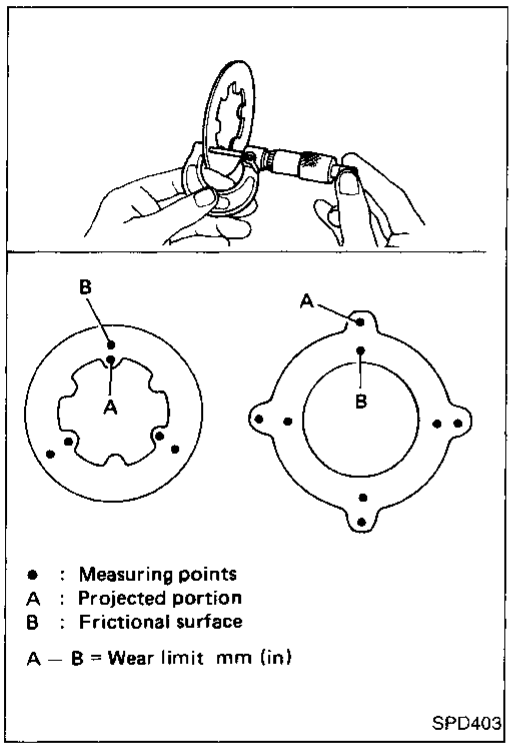

4. Measure frictional surfaces and projected portions of friction discs, plates, spring disc and plate. If any part has worn beyond the wear limit, replace it with a new one that is the same thickness as the projected portion.
   Wear limit:
   0.1 mm (0.004 in) or less

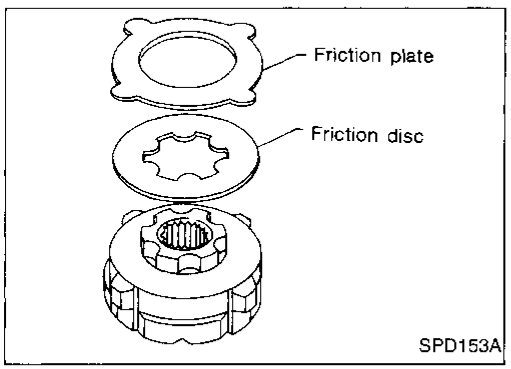

Assembly

Prior to assembling discs and plates, properly lubricate them with limited slip differential oil.

1. Alternately position specified number of friction plates and friction discs on rear of side gear.

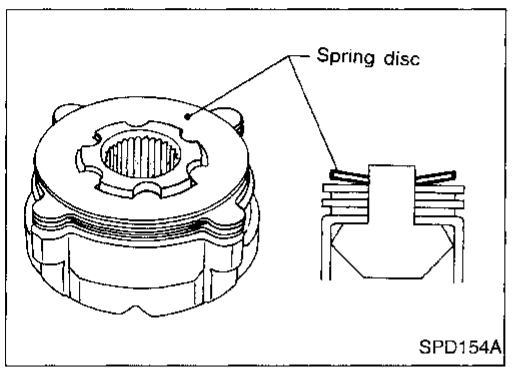

2. Install spring disc.

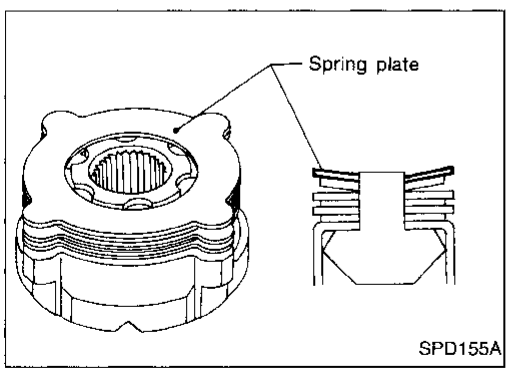

3. Install spring plate.

Assembly (Cont'd)

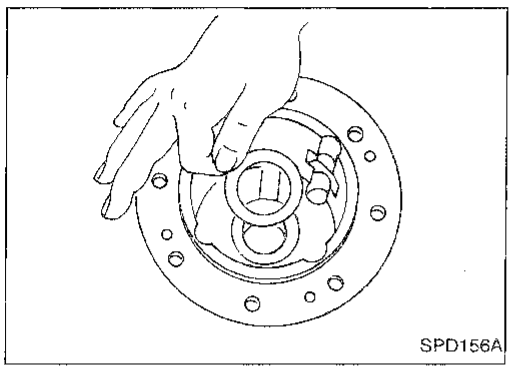

4. Install side gear thrust washer to differential case A.

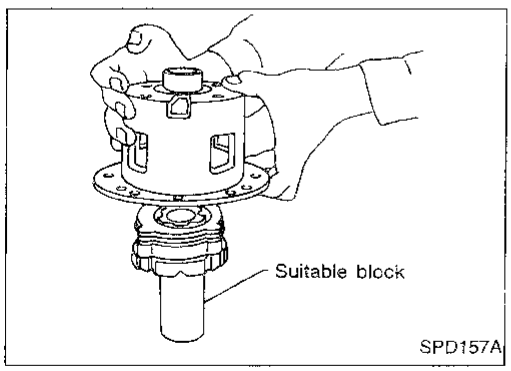

5. Install differential case A over side gear, discs and plates assembly.

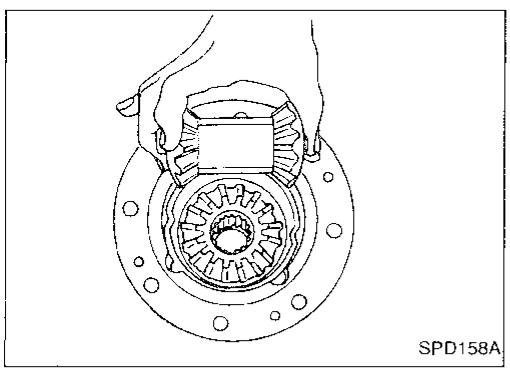

6. Install pinion mate gears, pinion shaft and thrust block to differential case A.

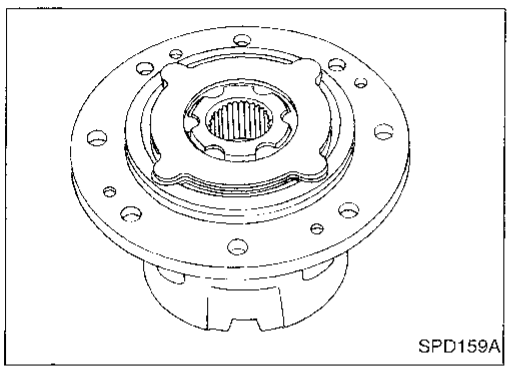

7. Install side gear to pinion mate gears.
8. Install pressure ring to side gear.
9. Install each disc and plate.

Use same procedures as outlined in steps 1. through 3.

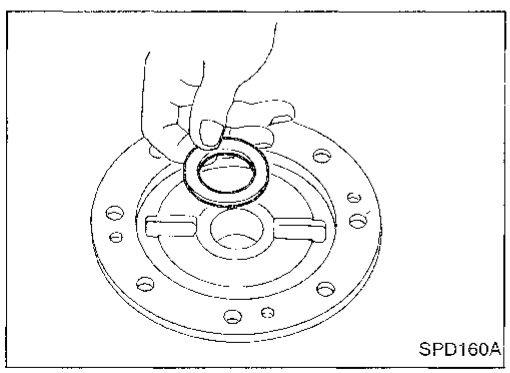

10. Install side gear thrust washer to differential case B.

Assembly (Cont'd)

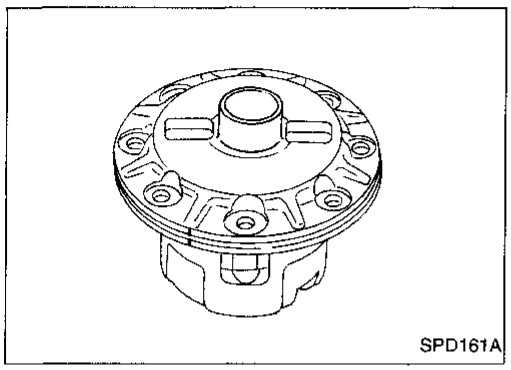

11. Install differential case B.

Position differential cases B and A by correctly aligning marks stamped on cases.

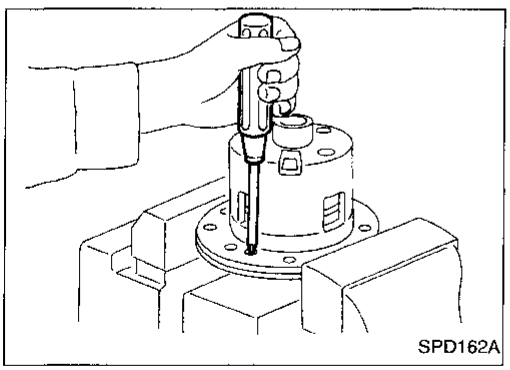

12. Tighten differential case couple screws.

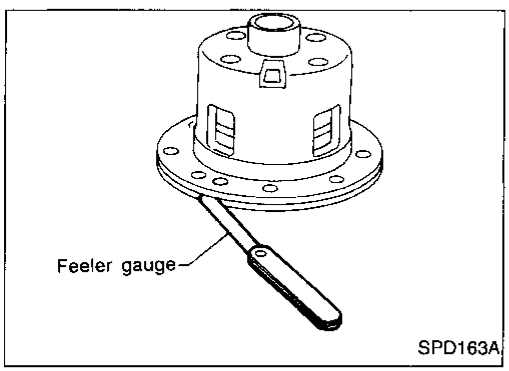

13. Check if there is a clearance between differential cases B and A.

If there is a clearance, use a thinner side gear thrust washer on both sides.

Available side gear thrust washers:
Refer to SDS, PD-104.

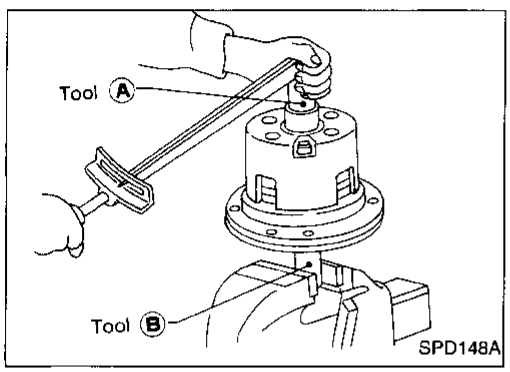

14. Check differential torque:

Differential torque:
New parts
69 - 118 N·m (7 - 12 kg-m, 51 - 87 ft-lb)
Used parts
39 - 74 N·m (4 - 7.5 kg-m, 29 - 54 ft-lb)
Tool numbers:
Ⓐ KV38105110 (—)
Ⓑ KV38105120 (—)

If greater than specification, use a thinner friction disc. If less than specification, use a thicker friction disc.

Available friction discs:
Refer to SDS, PD-104.

For quiet and reliable final drive operation, the following five adjustments must be made correctly:
1. Side bearing preload
2. Pinion gear height
3. Pinion bearing preload. Refer to "ASSEMBLY", PD-55.
4. Ring gear-to-pinion backlash. Refer to "ASSEMBLY", PD-55.
5. Ring and pinion gear tooth contact pattern

Side Bearing Preload

A selection of carrier side bearing preload shims is required for successful completion of this procedure.

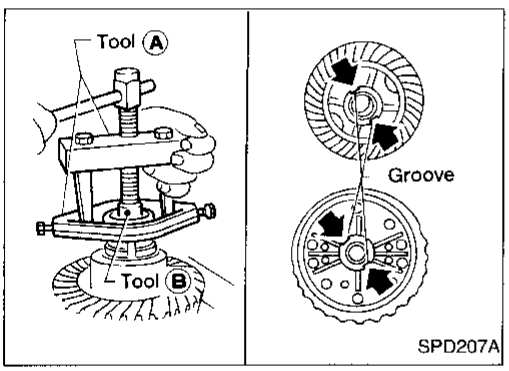

1. Make sure all parts are clean and that the bearings are well lubricated with light oil or type "DEXRON™" automatic transmission fluid.
2. Remove side bearing inner cones.

To prevent damage to bearing, engage puller jaws in grooves.

Tool numbers:

Ⓐ ST33051001 (J22888-20)
Ⓑ ST33061000 (J8107-2)

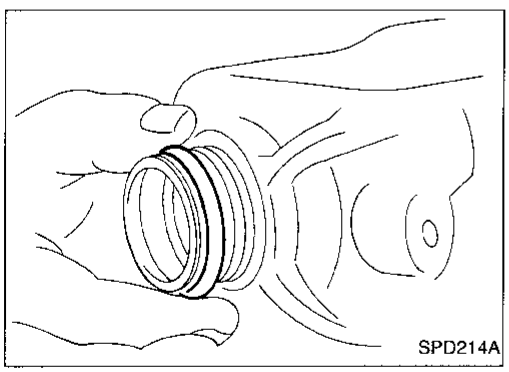

3. Reinstall all of the original side bearing adjusting shims on the carrier side, away from the ring gear.

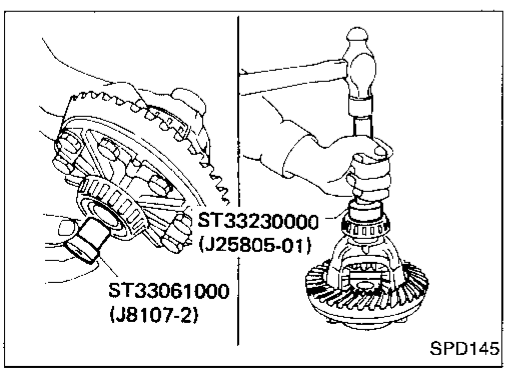

4. Reinstall the carrier side bearing using Tools J25805-01 and J8107-2. Press on the bearings.

Side Bearing Preload (Cont'd)

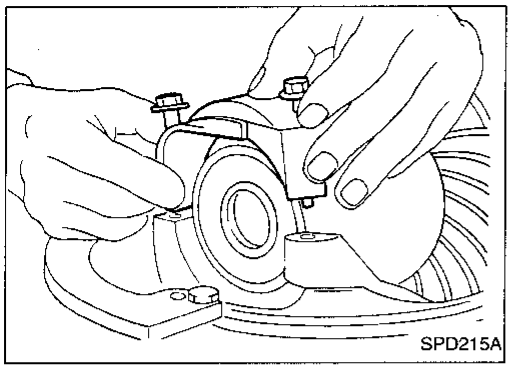
SPD215A

5. Install carrier and bearings into the final drive housing. Install side bearing caps. Torque the bolts and tap on the caps with a soft hammer to seat the bearings.
   Side bearing cap bolt torque specification:
   49 - 59 N·m (5 - 6 kg-m, 36 - 43 ft-lb)

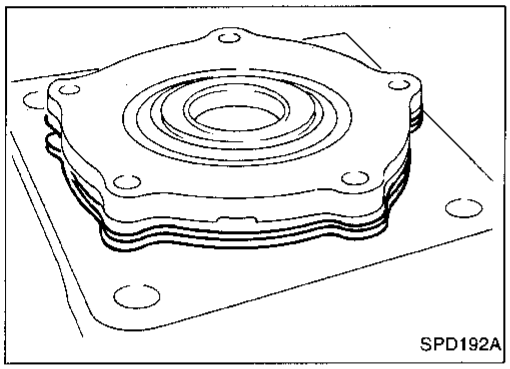
SPD192A

6. After turning the carrier several times to seat the bearings, measure carrier turning force with spring gauge J8129.
   Turning force specification:
   34.3 - 39.2 N (3.5 - 4.0 kg, 7.7 - 8.8 lb)
   of pulling force at the ring gear bolt

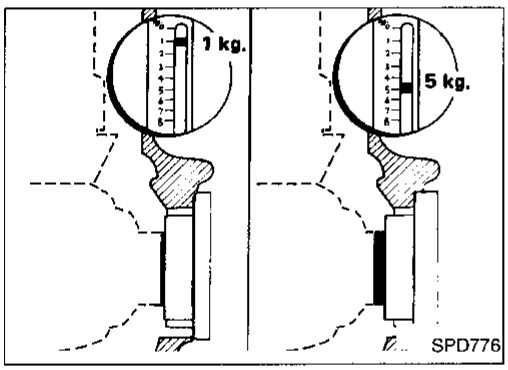

SPD776

7. If necessary, correct the carrier bearing preload by adding to or subtracting from the total amount of shim thickness.
   Add shim thickness to increase turning force on the carrier.
   Subtract shim thickness to decrease turning force on the carrier.

Pinion Gear Height

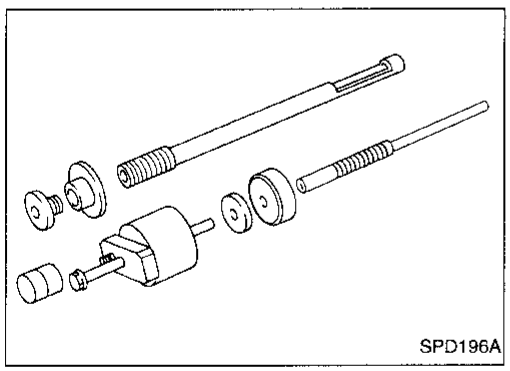
SPD196A

1. Make sure all parts are clean and that the bearings are well lubricated.
2. Assemble the pinion gear bearings into the pinion pre-load shim selector Tool, J34309.

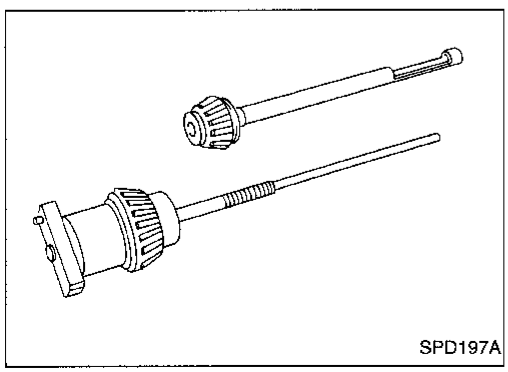
SPD197A

- **Front Pinion Bearing** — make sure the J34309-3 front pinion bearing is secured tightly against the J34309 gauge anvil. Then turn the front pinion bearing pilot J34309-5 to secure the bearing in its proper position.
- **Rear Pinion Bearing** — the rear pinion bearing pilot, J34309-15, is used to center the rear pinion bearing only. The rear pinion bearing locking seat, J34309-4 is used to lock the bearing to the assembly.

Pinion Gear Height (Cont'd)

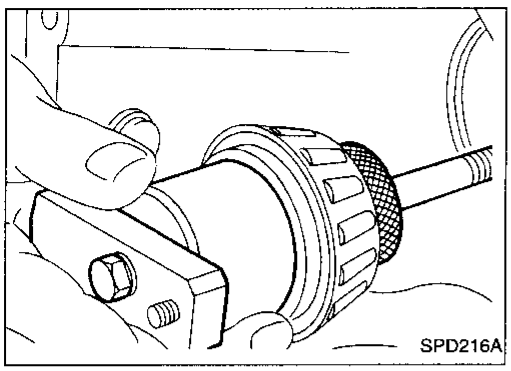

3. Place the pinion pre-load shim selector Tool J34309-1 gauge screw assembly with the pinion rear bearing inner cone installed into the final drive housing.

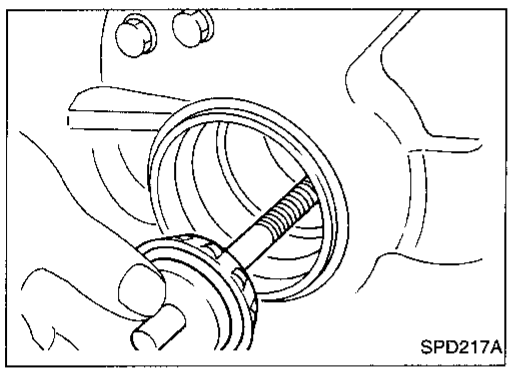

4. Assemble the front pinion bearing inner cone and the J34309-2 gauge anvil together with the J34309-1 gauge screw in the final drive housing. Make sure that the pinion height gauge plate, J34309-16, will turn a full 360 degrees, and tighten the two sections together by hand.

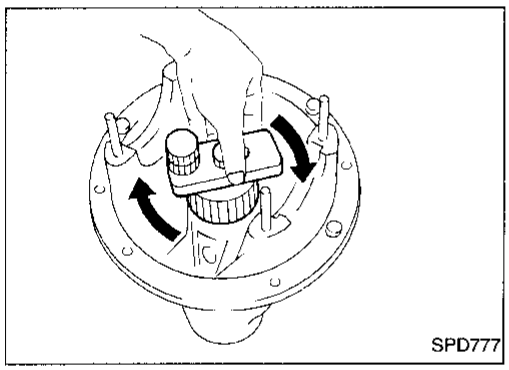

5. Turn the assembly several times to seat the bearings.

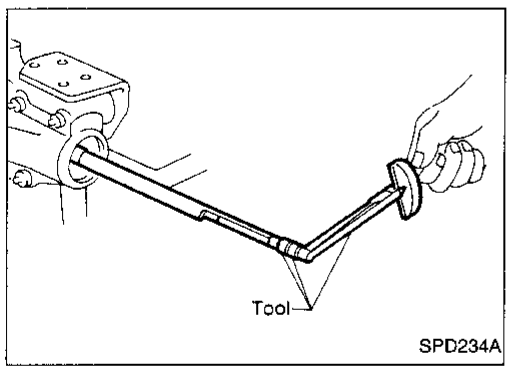

6. Measure the turning torque at the end of the J34309-2 gauge anvil using Tool.
   Tool number: ST3127S000 (J25765-A)
   Turning torque specification:
   1.0 - 1.3 N·m
   (10 - 13 kg-cm, 8.7 - 11.3 in-lb)

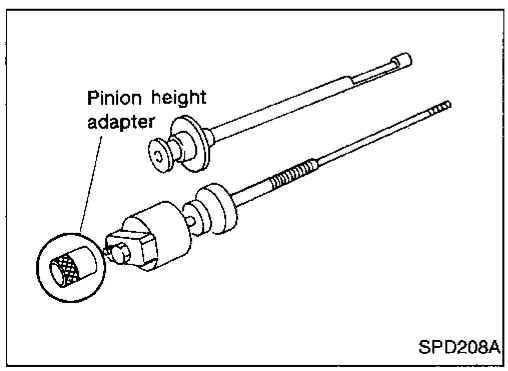

7. Place the J34309-14 pinion height adapter onto the gauge plate and tighten it by hand.

CAUTION:
Make sure all machined surfaces are clean.

Pinion Gear Height (Cont'd)

PINION HEIGHT ADJUSTING WASHER SELECTION

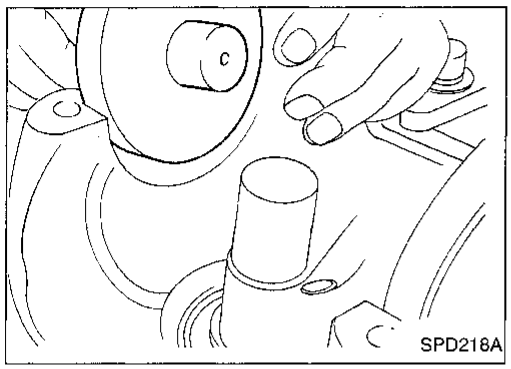

8. Now, position the side bearing discs, J25269-18, and arbor firmly into the side bearing bores.

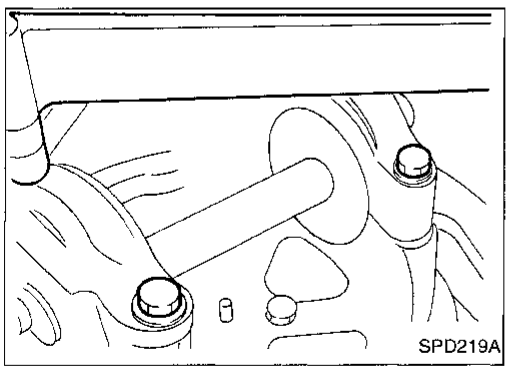

9. Install the side bearing caps and torque the cap bolts.
   Specification:
   49 - 59 N·m (5 - 6 kg-m, 36 - 43 ft-lb)

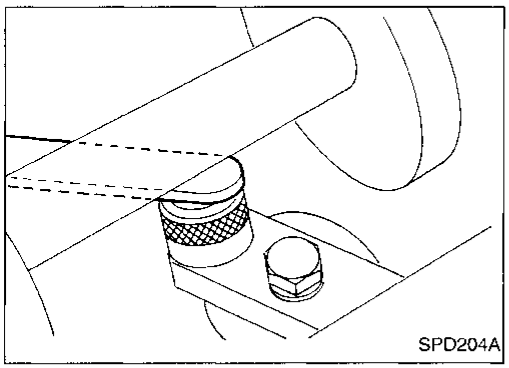

10. Select the correct standard pinion height adjusting washer thickness by using J34309-101 feeler gauge. Measure the gap between the J34309-14 pinion height adapter and the arbor.

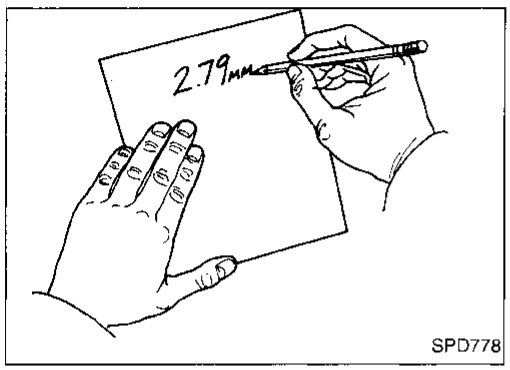

11. Write down your exact total measurement.

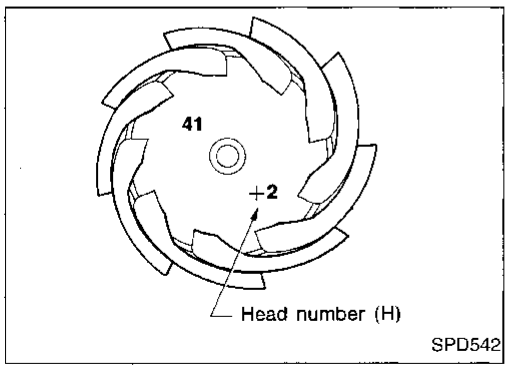

12. Correct the pinion height washer size by referring to the "pinion head number".

There are two numbers painted on the pinion gear. The first one refers to the pinion and ring gear as a matched set and should be the same as the number on the ring gear. The second number is the "pinion head height number," and it refers to the ideal pinion height from standard for quietest operation.

Pinion Gear Height (Cont'd)

Use the following chart to determine the correct pinion height washer.

Pinion Head Height Number	Add or Remove from the Standard Pinion Height Washer Thickness Measurement
–6	Add 0.06 mm (0.0024 in)
–5	Add 0.05 mm (0.0020 in)
–4	Add 0.04 mm (0.0016 in)
–3	Add 0.03 mm (0.0012 in)
–2	Add 0.02 mm (0.0008 in)
–1	Add 0.01 mm (0.0004 in)
0	Use the selected washer thickness
+1	Subtract 0.01 mm (0.0004 in)
+2	Subtract 0.02 mm (0.0008 in)
+3	Subtract 0.03 mm (0.0012 in)
+4	Subtract 0.04 mm (0.0016 in)
+5	Subtract 0.05 mm (0.0020 in)
+6	Subtract 0.06 mm (0.0024 in)

13. Select the correct pinion height washer.
    Drive pinion height adjusting washer:
    Refer to SDS, PD-104.

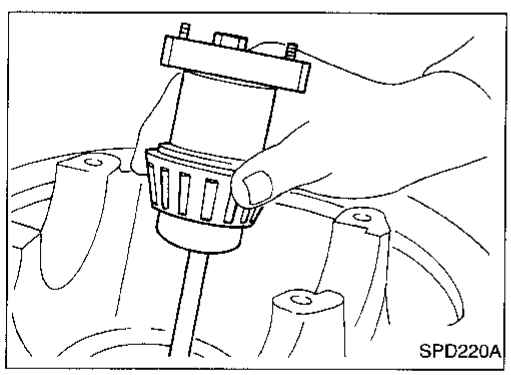

14. Remove the J34309 pinion preload shim selector Tool from the final drive housing and disassemble to retrieve the pinion bearings.

Tooth Contact

Checking of gear tooth contact pattern is necessary to verify correct relationship between ring gear and drive pinion.
Hypoid gear sets which are not positioned properly may be noisy, or have short life, or both. With a pattern check, the most desirable contact for low noise level and long life can be assured.

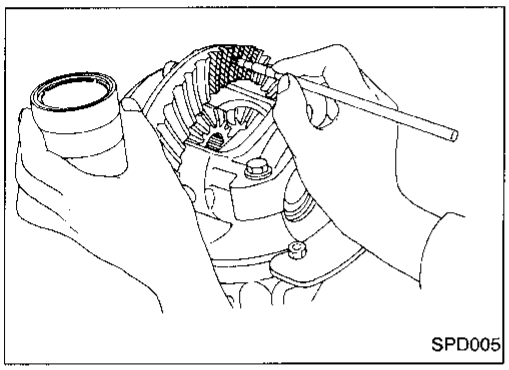
SPD005

1. Thoroughly clean ring gear and drive pinion teeth.
2. Sparingly apply a mixture of powdered ferric oxide and oil or equivalent to 3 or 4 teeth of ring gear drive side.

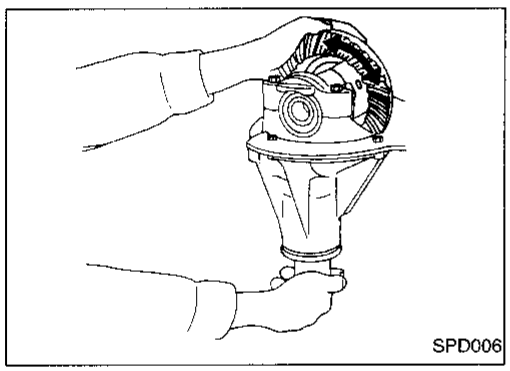
SPD006

3. Hold companion flange steady and rotate the ring gear in both directions.

Usually the pattern will be correct if you have calculated the shims correctly and the backlash is correct.
However, in rare cases you may have to use trial-and-error processes until you get a good tooth contact pattern.
The tooth pattern is the best indication of how well a differential has been set up.

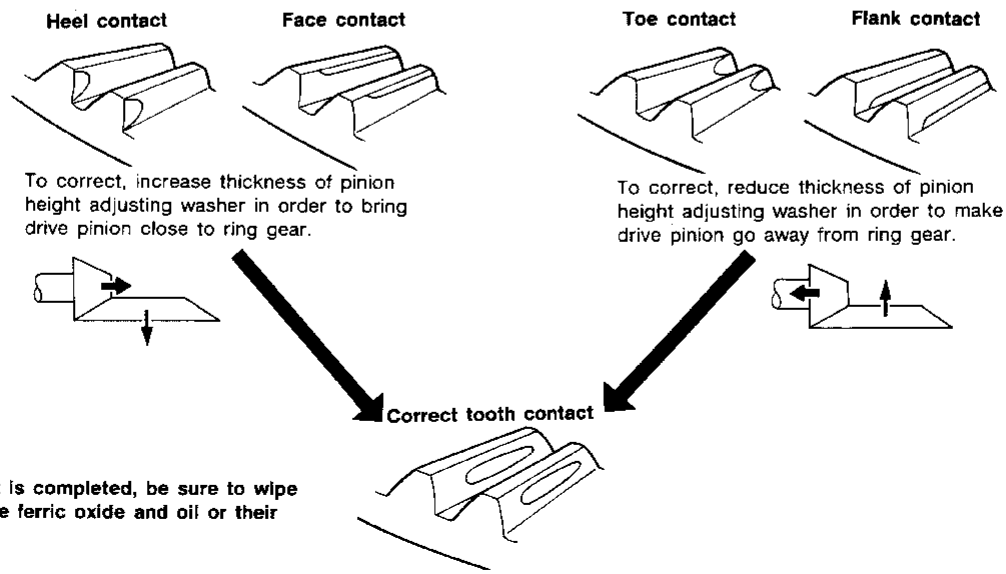

When adjustment is completed, be sure to wipe off completely the ferric oxide and oil or their equivalent.

SPD007

Differential Case

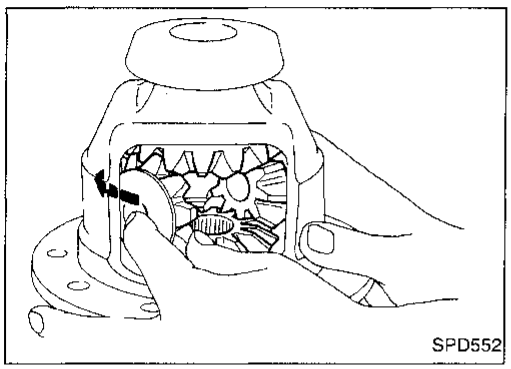

1. Install side gears, pinion mate gears and thrust washers into differential case.

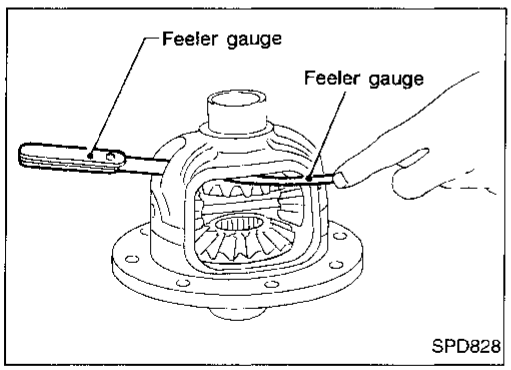

2. Fit pinion mate shaft to differential case so that it meets lock pin holes.
3. Adjust backlash between side gear and pinion mate gear by selecting side gear thrust washer. Refer to SDS, PD-104.
   Backlash between side gear and pinion mate gear (Clearance between side gear thrust washer and differential case):
   Less than 0.15 mm (0.0059 in)

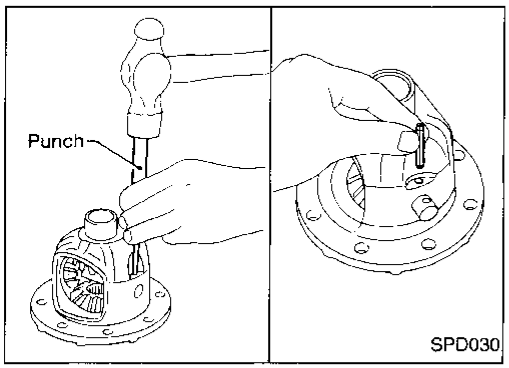

4. Install pinion mate shaft lock pin with a punch.

Make sure lock pin is flush with case.

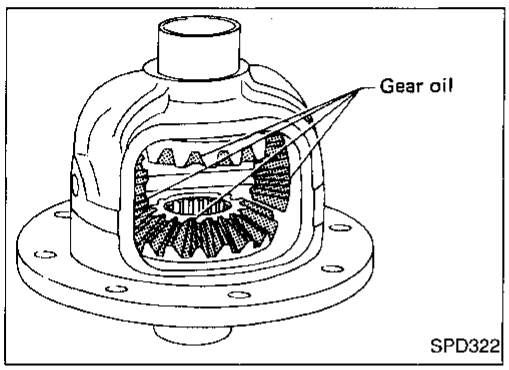

5. Apply gear oil to gear tooth surfaces and thrust surfaces and check to see they turn properly.

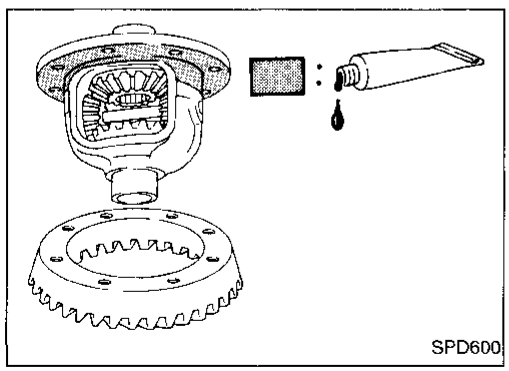

6. Apply locking agent [Locktite (stud lock) or equivalent] to contacting surfaces of ring gear and differential case, then place differential case on ring gear.

Differential Case (Cont'd)

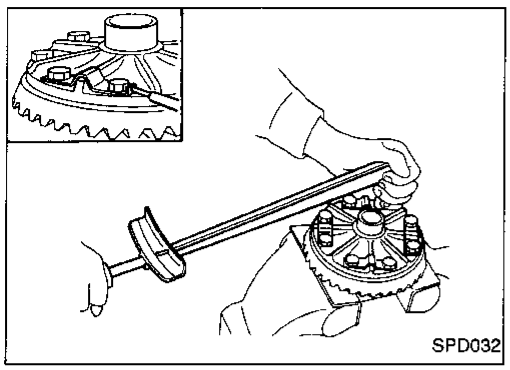

7. Apply a small amount of locking agent (described on previous page) to ring gear bolts.
8. Install new lock straps and ring gear bolts.
- **Tighten bolts in a criss-cross fashion, lightly tapping bolt head with a hammer.**
- **Then bend up lock straps to lock the bolts in place.**

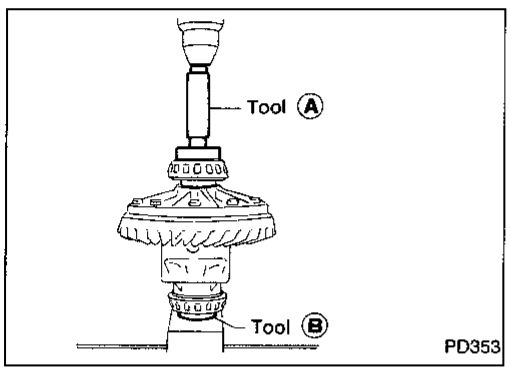

9. Select side bearing adjusting shims.
   Refer to "ADJUSTMENT", PD-46.
10. Install the shims behind each bearing and press on side bearing inner cones with Tools.
    Tool numbers:
    Ⓐ ST33230000 (J25805-01)
    Ⓑ ST33061000 (J8107-2)

Differential Carrier

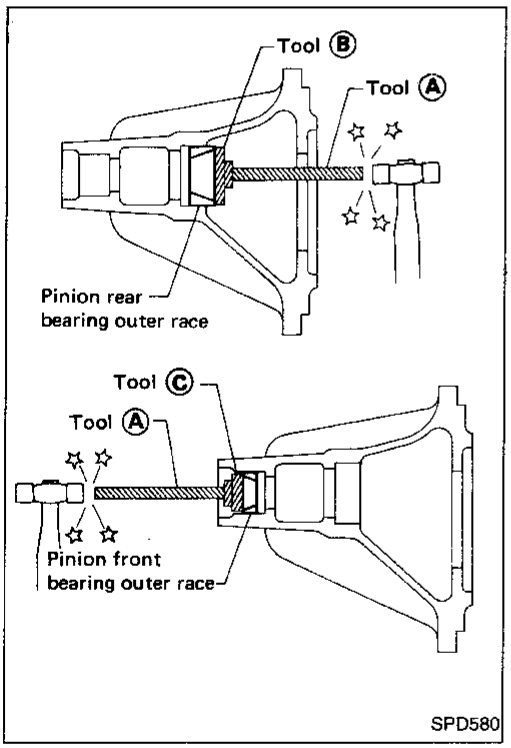

1. Press-fit front and rear bearing outer races with Tools.
   Tool numbers:
   Ⓐ ST30611000 (J25742-1)
   Ⓑ ST30621000 (J25742-5)
   Ⓒ ST30613000 (J25742-3)

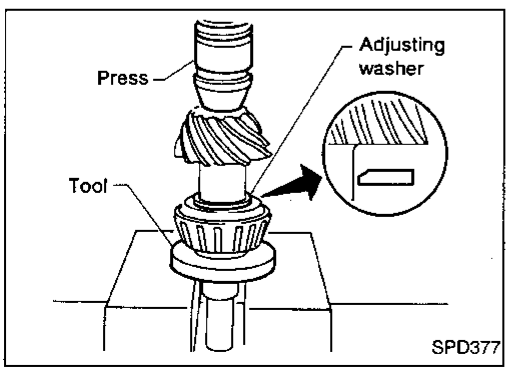

2. Select pinion height adjusting washer. Refer to "ADJUSTMENT", PD-47.
3. Install pinion height adjusting washer in drive pinion, and press-fit rear bearing inner cone with press and Tool.
   Tool number: ST30901000 (J26010-01)

Differential Carrier (Cont'd)

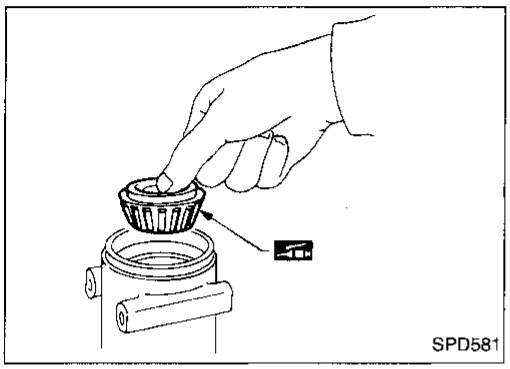

4. Place pinion front bearing inner cone in gear carrier.

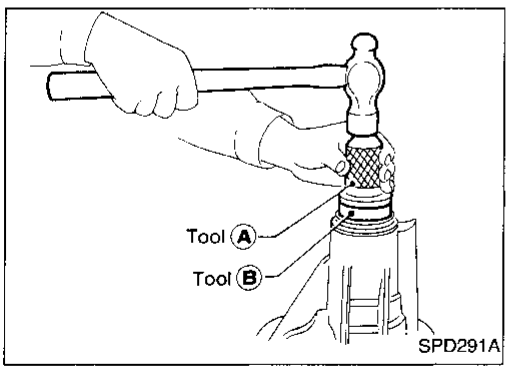

5. Apply multi-purpose grease to cavity at sealing lips of oil seal. Install front oil seal.
   Tool numbers:
   Ⓐ ST30720000 (J25405)
   Ⓑ KV38102510 (—)

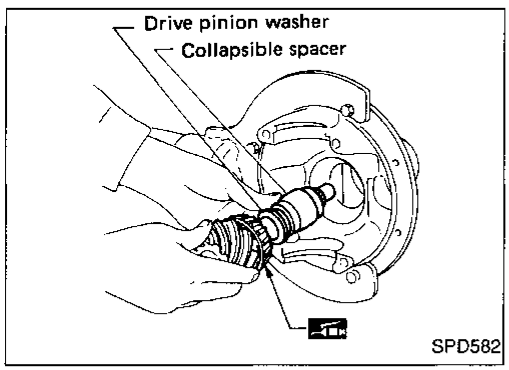

6. Install drive pinion washer, collapsible spacer and drive pinion in gear carrier.

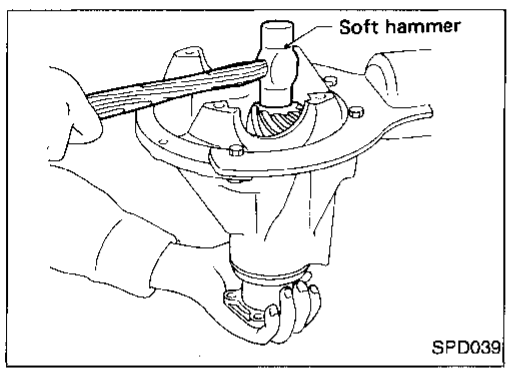

7. Install companion flange and hold it firmly.
   Insert pinion into companion flange by tapping its head with a soft hammer.

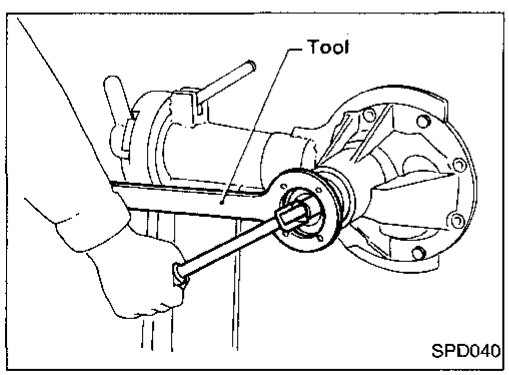

8. Temporarily tighten pinion nut until there is no axial play.
   The threaded portion of drive pinion and pinion nut should be free from oil or grease.
   Tool number: ST38060002 (J34311)

Differential Carrier (Cont'd)

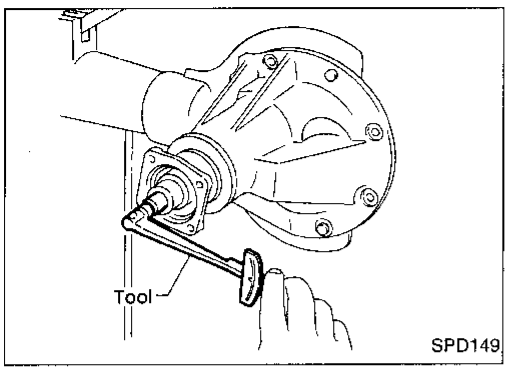

9. Tighten pinion nut by degrees to the specified preload while checking the preload with Tools.

When checking preload, turn drive pinion in both directions several times to seat bearing rollers correctly.

Pinion bearing preload:
1.1 - 1.6 N·m (11 - 16 kg-cm, 9.5 - 13.9 in-lb)
Tool number: ST3127S000 (J25765-A)

CAUTION:
The preload is achieved by the permanent setting of the collapsible spacer. So, if an overpreload results from turning of the pinion nut excessively, the spacer should be replaced by new one.

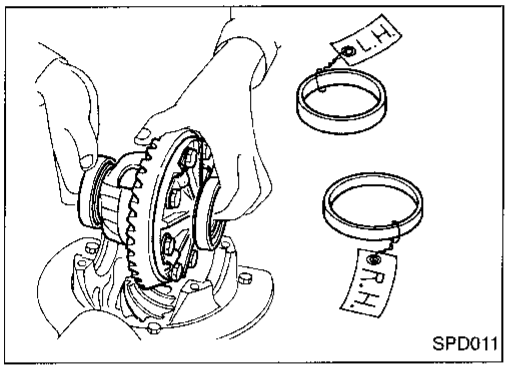

10. Install differential case assembly with side bearing outer races into gear carrier.

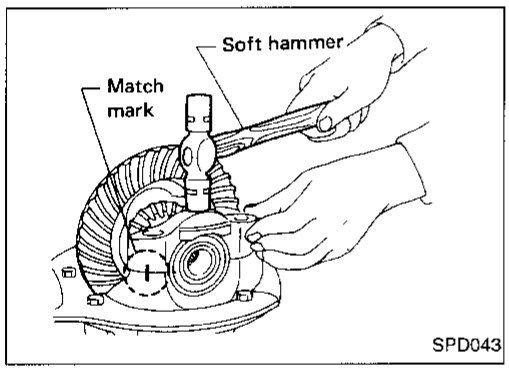

11. Align mark on bearing cap with that on gear carrier and install bearing cap on gear carrier.

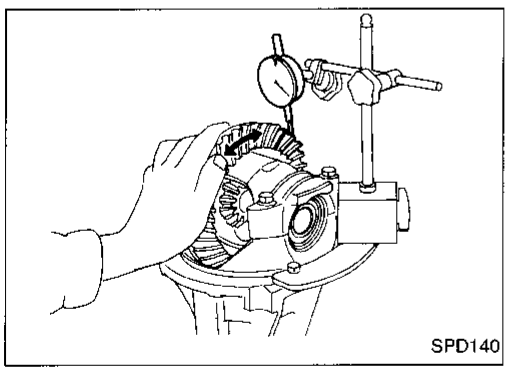

12. Measure ring gear-to-drive pinion backlash with a dial indicator.

Ring gear-to-drive pinion backlash:
0.13 - 0.18 mm (0.0051 - 0.0071 in)

- If backlash is too small, decrease thickness of left shim and increase thickness of right shim by the same amount.
- If backlash is too great, reverse the above procedure.

Never change the total amount of shims as it will change the bearing preload.

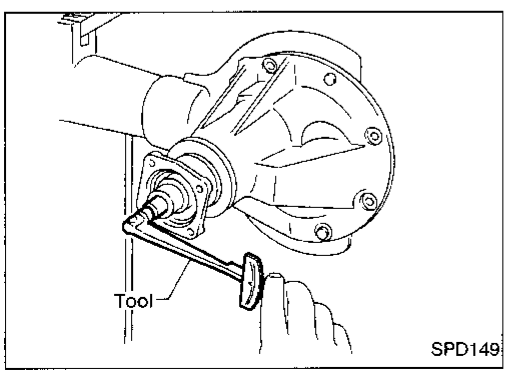

13. Check total preload with Tool.

When checking preload, turn drive pinion in both directions several times to set bearing rollers.

Tool number: ST3127S000 (J25765-A)
Total preload:
1.2 - 2.2 N·m (12 - 22 kg-cm, 10 - 19 in-lb)

Differential Carrier (Cont'd)

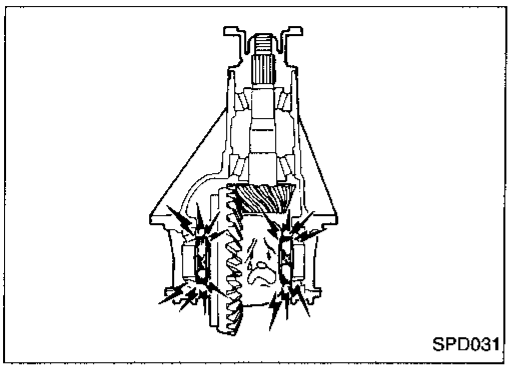

- If preload is too great, remove the same amount of shims from each side.
- If preload is too small, add the same amount of shims to each side.

Never add or remove a different number of shims for each side as it will change ring gear-to-drive pinion backlash.

14. Recheck ring gear-to-drive pinion backlash because an increase or decrease in thickness of shims will cause change of ring gear-to-pinion backlash.

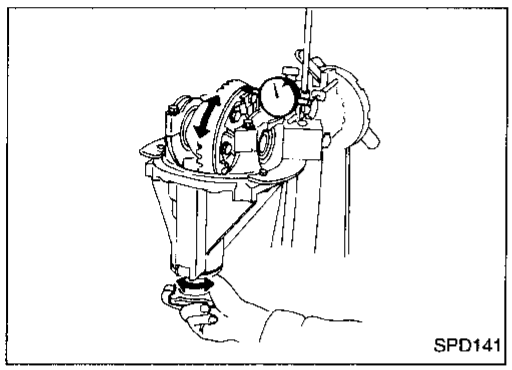

15. Check runout of ring gear with a dial indicator.
    Runout limit: 0.08 mm (0.0031 in)
- If backlash varies excessively in different places, the variance may have resulted from foreign matter caught between the ring gear and the differential case.
- If the backlash varies greatly when the runout of the ring gear is within a specified range, the hypoid gear set or differential case should be replaced.

16. Check tooth contact.
    Refer to "ADJUSTMENT", PD-51.

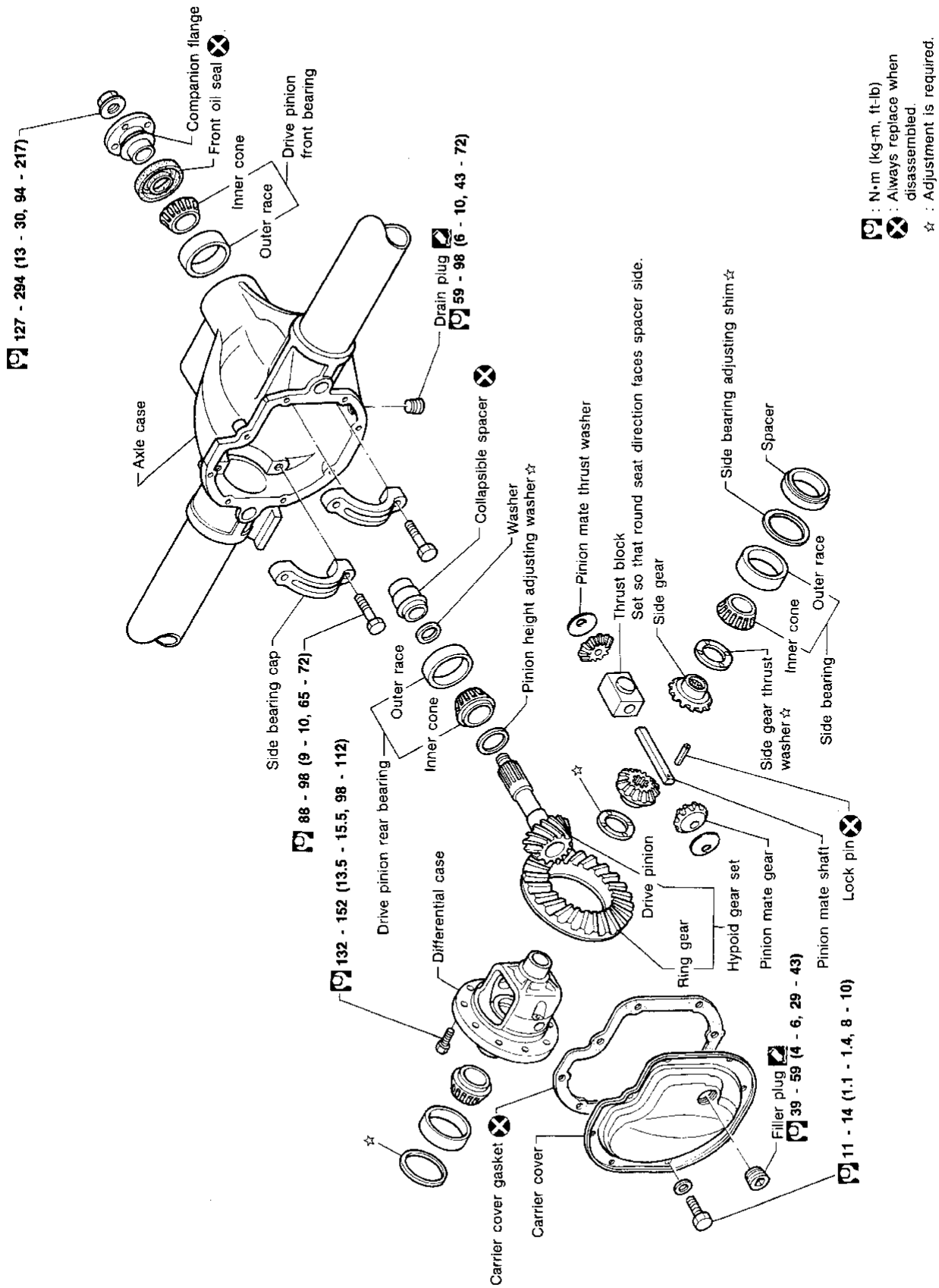

SEC. 380

SPD784-A

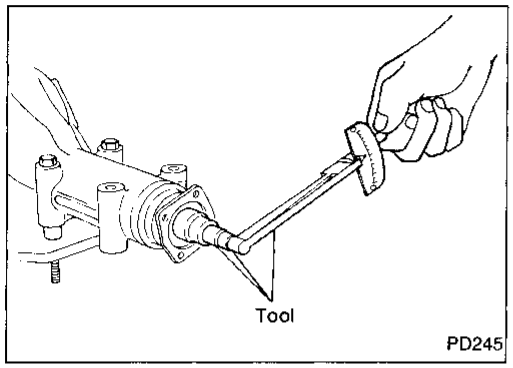

Pre-inspection

Before disassembling final drive, perform the following inspection.

- Total preload

a. Turn drive pinion in both directions several times to set bearing rollers.

b. Check total preload with Tool.

Tool number: ST3127S000 (J25765-A)
Total preload:
1.2 - 2.3 N·m
(12 - 23 kg-cm, 10 - 20 in-lb)

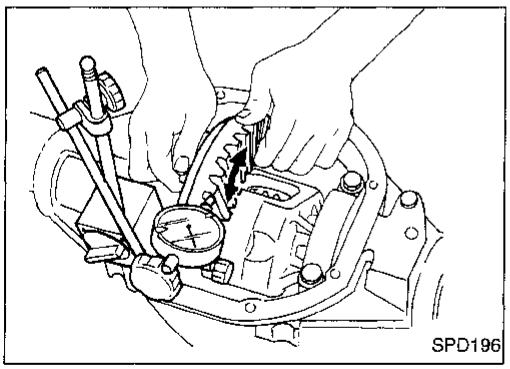

- Ring gear-to-drive pinion backlash.
  Check backlash of ring gear with a dial indicator at several points.
  Ring gear-to-drive pinion backlash:
  0.13 - 0.18 mm (0.0051 - 0.0071 in)

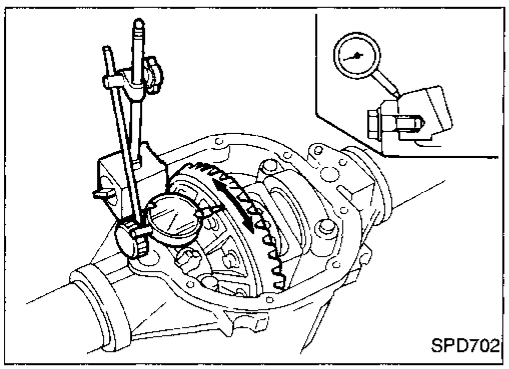

- Ring gear runout
  Check runout of ring gear with a dial indicator.
  Runout limit: 0.05 mm (0.0020 in)

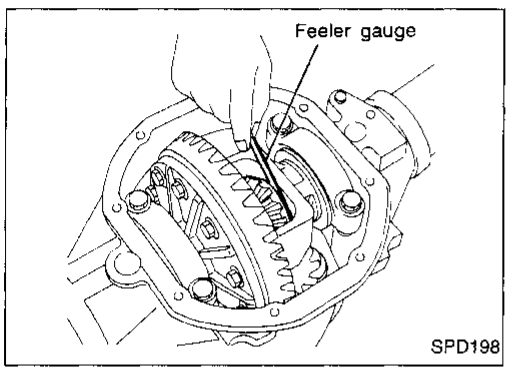

- Tooth contact
  Check tooth contact. Refer to "ADJUSTMENT", PD-74.
- Side gear-to-pinion mate gear backlash
  Measure clearance between side gear thrust washer and differential case with a feeler gauge.
  Clearance between side gear thrust washer and differential case:
  Less than 0.15 mm (0.0059 in)

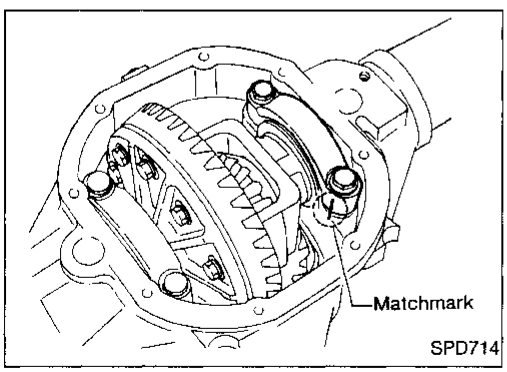

Differential Carrier

1. Remove rear cover and rear cover gasket.
2. Put match marks on one side of side bearing cap with paint or punch to ensure that it is replaced in proper position during reassembly.

Bearing caps are line-bored during manufacture and should be put back in their original places.

Differential Carrier (Cont'd)

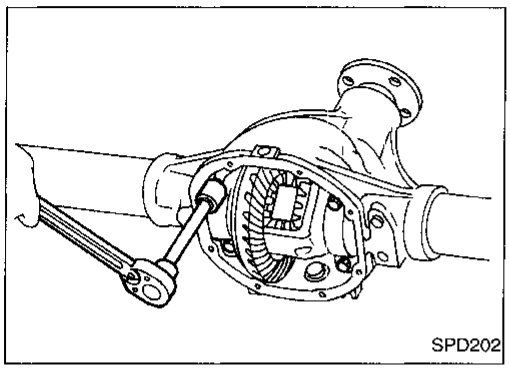
SPD202

3. Remove side bearing caps.

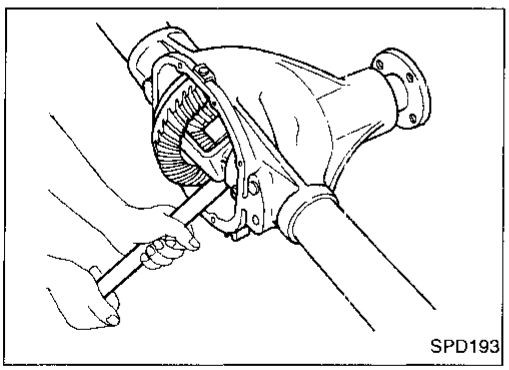
SPD193

4. Remove differential case assembly with pry bar.

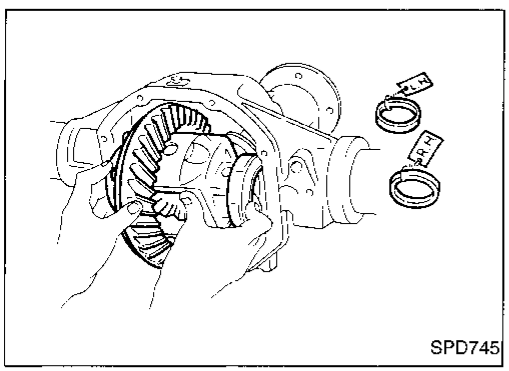
SPD745

Keep the side bearing outer races together with their respective inner cones — do not mix them up.

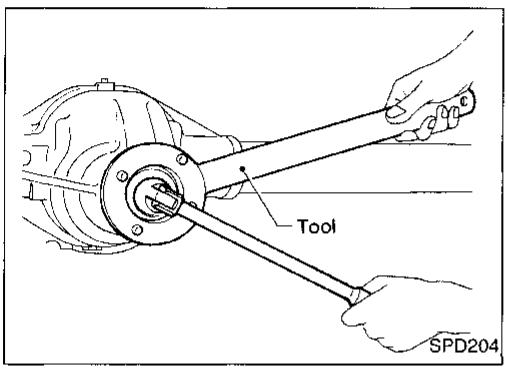

SPD204

5. Remove pinion nut with Tool.
   Tool number: ST38060002 (J34311)

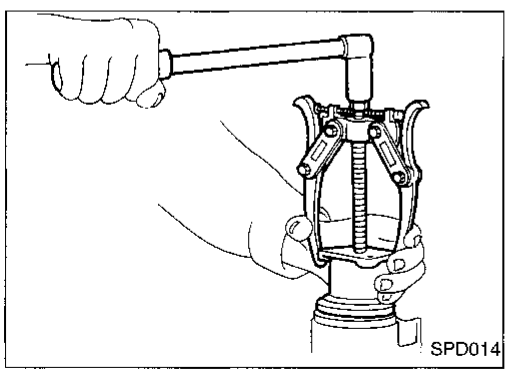
SPD014

6. Remove companion flange with puller.

Differential Carrier (Cont'd)

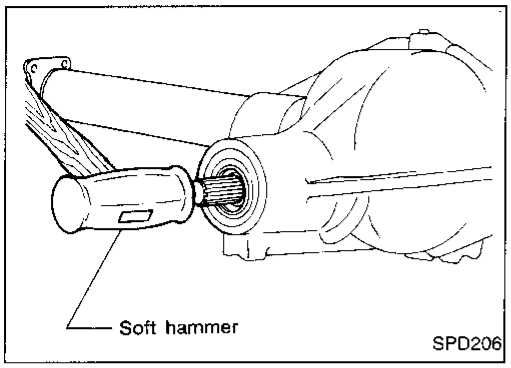

7. Remove drive pinion with soft hammer.
8. Remove front oil seal and pinion front bearing inner cone.

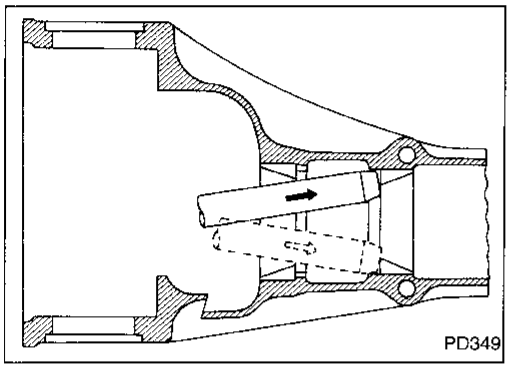

9. Remove pinion bearing outer races with a brass drift.

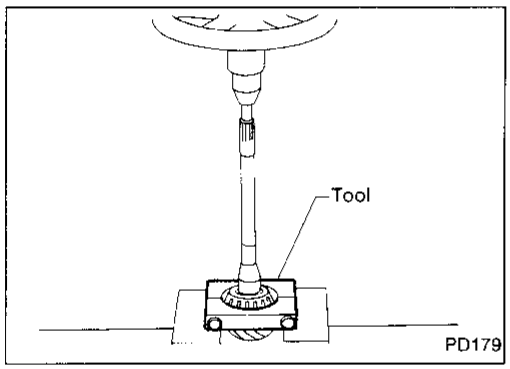

10. Remove pinion rear bearing inner cone and pinion height adjusting washer.
    Tool number: ST30031000 (J22912-01)

Differential Case

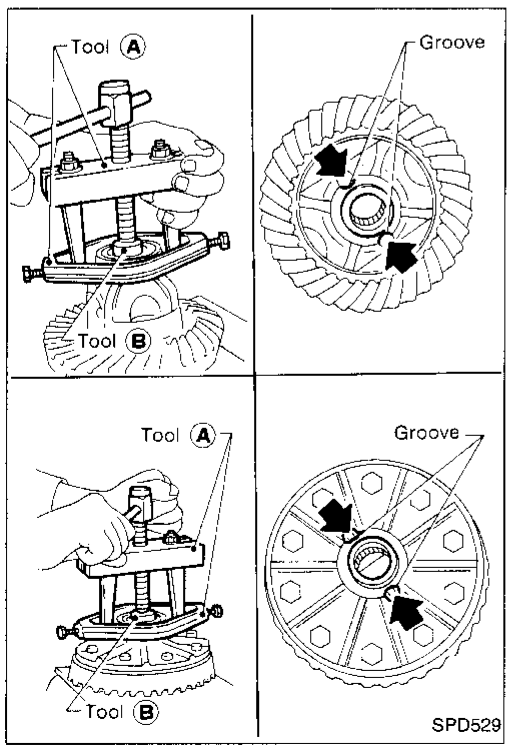

1. Remove side bearing inner cones.

To prevent damage to bearing, engage puller jaws in grooves.

Tool numbers:

Ⓐ ST33051001 (J22888-20)
Ⓑ ST33061000 (J8107-2)

Differential Case (Cont'd)

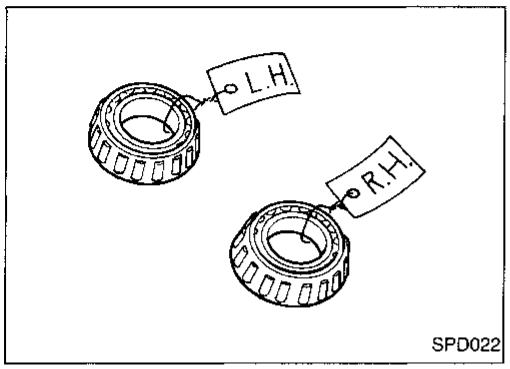

SPD022

Be careful not to confuse the right and left hand parts.

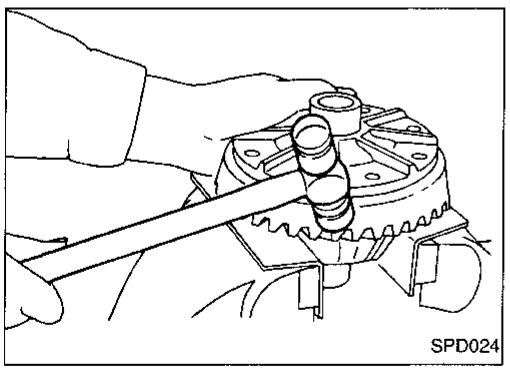
SPD024

2. Loosen ring gear bolts in a criss-cross fashion.
3. Tap ring gear off the differential case with a soft hammer.

Tap evenly all around to keep ring gear from binding.

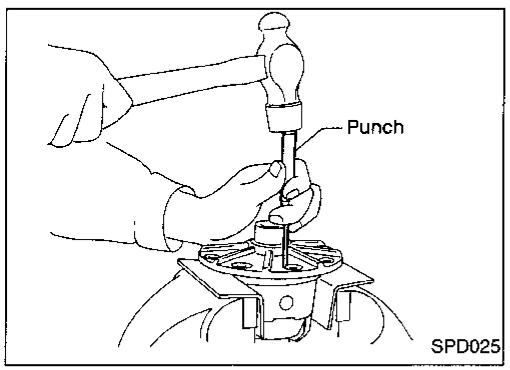

SPD025

4. Punch off pinion mate shaft lock pin from ring gear side.

Lock pin is calked at pin hole mouth on differential case.

Ring Gear and Drive Pinion

Check gear teeth for scoring, cracking or chipping. If any damaged part is evident, replace ring gear and drive pinion as a set (hypoid gear set).

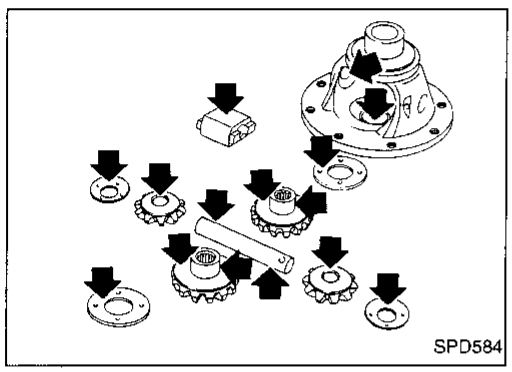

Differential Case Assembly

Check mating surfaces of differential case, side gears, pinion mate gears, pinion mate shaft, thrust block and thrust washers.

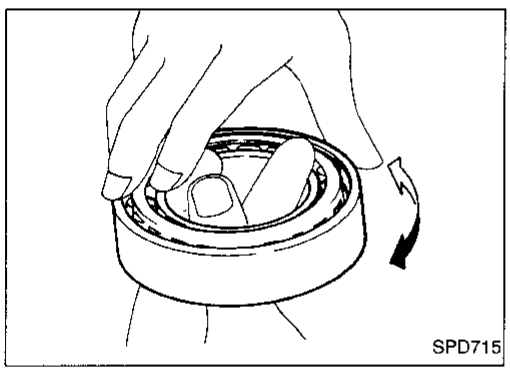

Bearing

1. Thoroughly clean bearing.
2. Check bearings for wear, scratches, pitting or flaking.
   Check tapered roller bearing for smooth rotation. If damaged, replace outer race and inner cone as a set.

No. of discs and plates (One side)

Model	C200
Friction disc	6
Friction plate	6
Spring plate	1

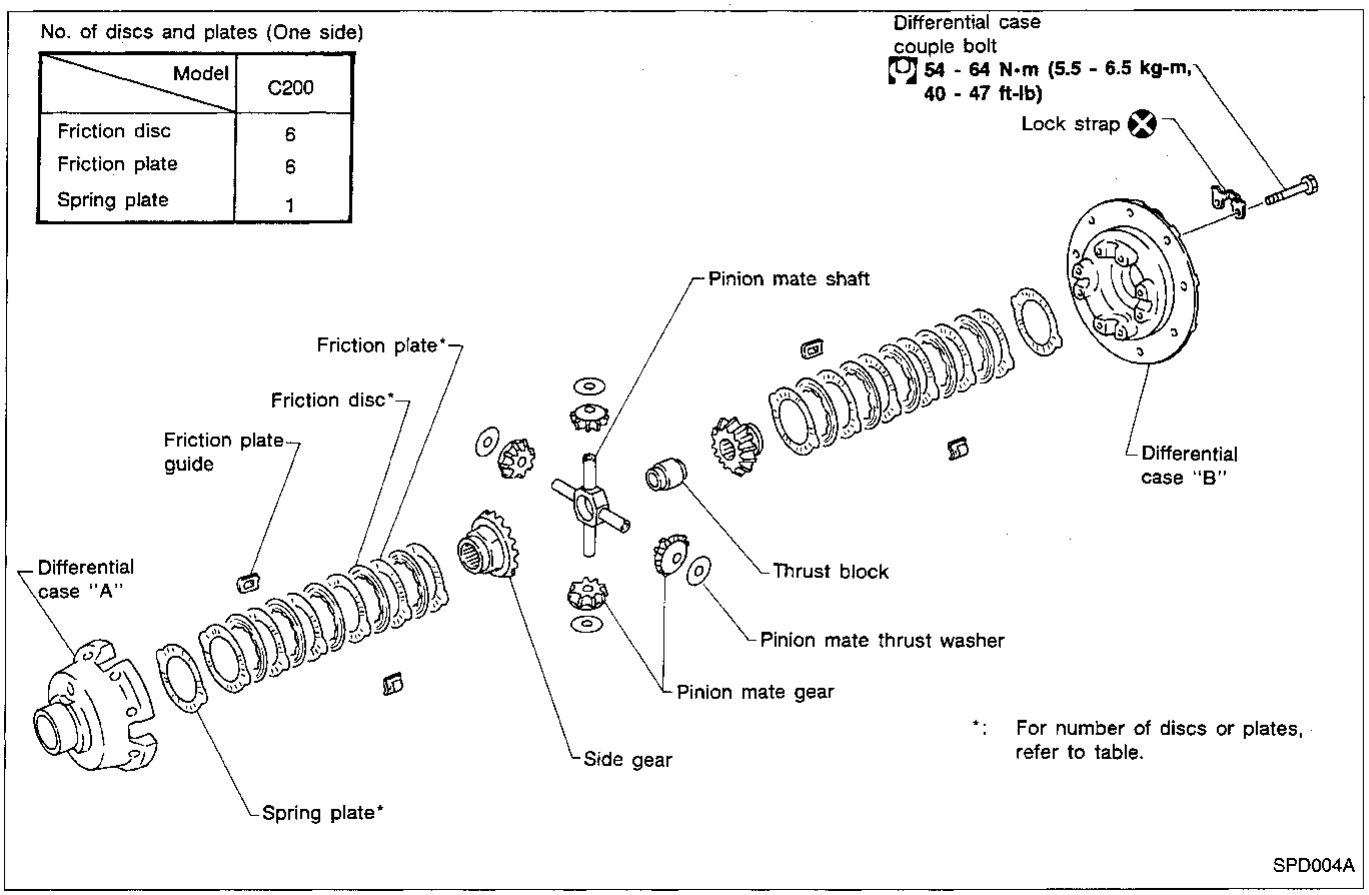

CAUTION:
Do not run engine when only one wheel (rear) is off the ground.

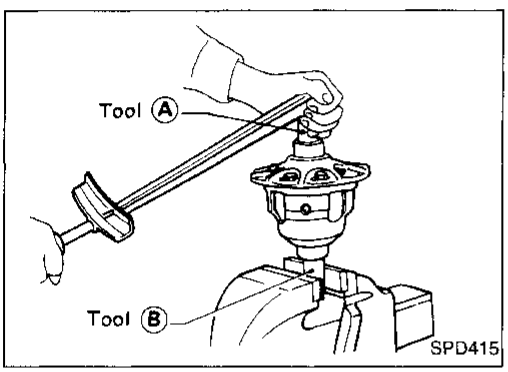

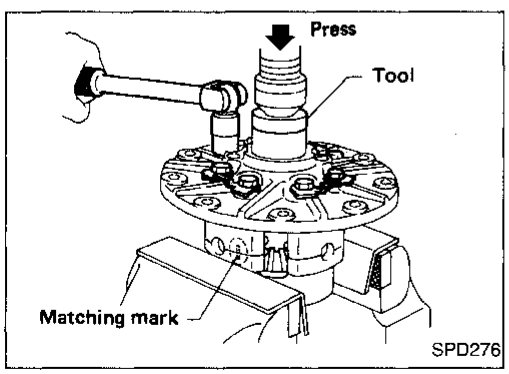

Preparation for Disassembly

CHECKING DIFFERENTIAL TORQUE

Measure differential torque with Tools.
If it is not within the specifications, inspect components of limited slip differential.

Differential torque:
88 - 108 N·m
(9.0 - 11.0 kg-m, 65 - 80 ft-lb)
Tool numbers:
Ⓐ KV38105110 (—)
Ⓑ KV38105120 (—)

Disassembly

1. Spread out lock straps.
2. Remove couple bolts using a press.
   Tool number: ST33081000 (—)
3. Separate differential cases A and B.
   Draw out component parts (discs and plates, etc.).

Put marks on gears and pressure rings so that they can be reinstalled in their original positions.

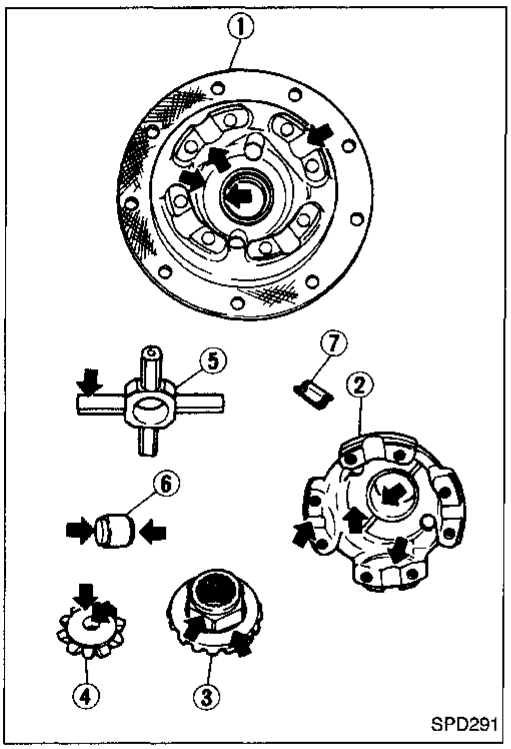

Inspection

CONTACT SURFACES

1. Clean the disassembled parts in suitable solvent and blow dry with compressed air.
2. If the following sufaces are found with burrs or scratches, smooth with oil stone.
   ① Differential case B
   ② Differential case A
   ③ Side gear
   ④ Pinion mate gear
   ⑤ Pinion mate shaft
   ⑥ Thrust block
   ⑦ Friction plate guide

DISC AND PLATE

1. Clean the discs and plates in suitable solvent and blow dry with compressed air.
2. Inspect discs and plates for wear, nicks and burrs.

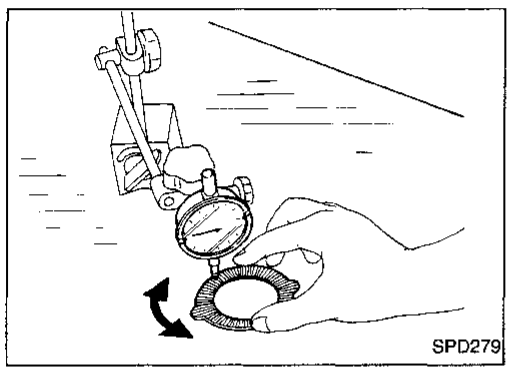

3. Check friction discs or plates for warpage.
   Maximum allowable warpage:
   0.08 mm (0.0031 in)
   If it exceeds limits, replace with a new plate to eliminate possibility of clutch slippage or sticking.

Inspection (Cont'd)

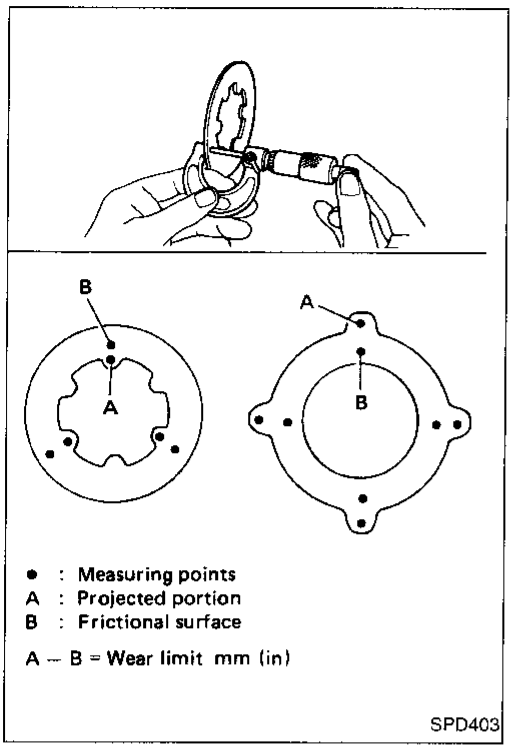

4. Measure frictional surfaces and projected portions of friction discs, plates and spring plate. If any part has worn beyond the wear limit, replace it with a new one that is the same thickness as the projected portion.
   Wear limit:
   0.1 mm (0.004 in) or less

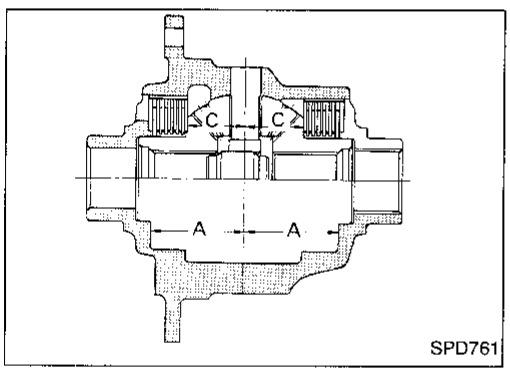

Adjustment

FRICTION DISC AND FRICTION PLATE END PLAY

End play of friction disc and friction plate can be calculated by using the following equation and should be adjusted within the following range.
Adjustment can be made by selecting friction disc having two different thicknesses.

End play E:
0.05 - 0.15 mm (0.0020 - 0.0059 in)

E = A – (B + C)

A: Length of differential case contact surface to differential case inner bottom.
B: Total thickness of friction discs, friction plates and spring plate in differential case on one side.
C: Length of differential case contact surface to back side of side gear.

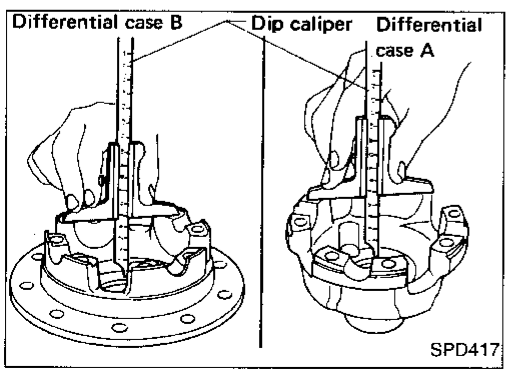

1. Measure values of "A".
   Standard length A:
   49.50 - 49.55 mm (1.9488 - 1.9508 in)

Adjustment (Cont'd)

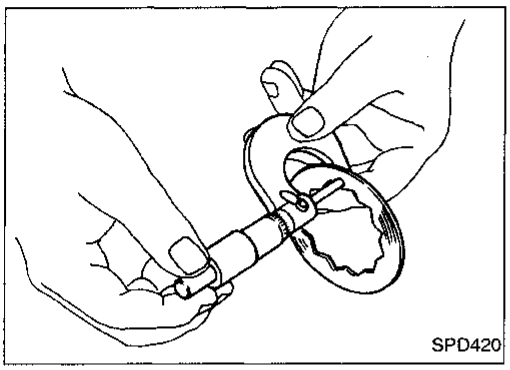

2. Measure thickness of each disc and plate.
   Total thickness "B":
   19.24 - 20.26 mm (0.7575 - 0.7976 in)
   No. of discs and plates (One side):
   Friction disc 6
   Friction plate 6
   Spring plate 1

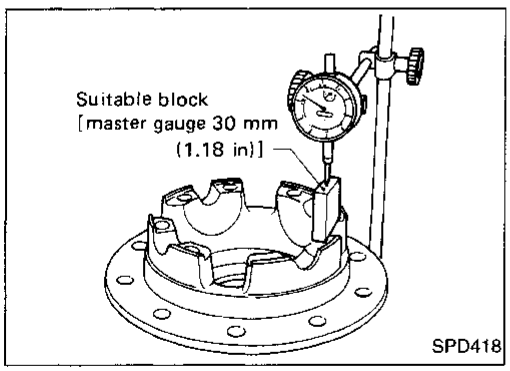

3. Measure values of "C".
a. Attach a dial indicator to the base plate.
b. Place differential case B on the base plate, and install a master gauge on case B.

Then adjust the dial indicator scale to zero with its tip on the master gauge.

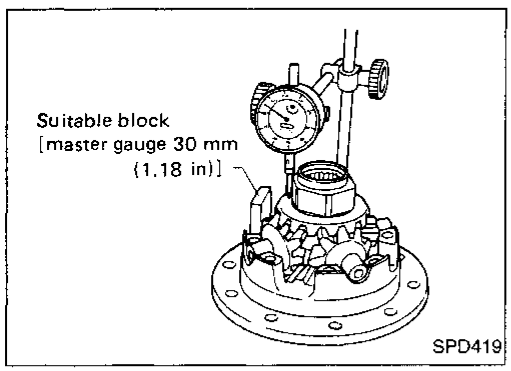

c. Install pinion mate gears, side gears and pinion mate shaft in differential case B.
d. Set dial indicator's tip on the side gear, and read the indication.

Example:

E = A – D
= A – (B + C)
= 0.05 to 0.15 mm
A = 49.52 mm
B = 19.45 mm
C = 29.7 mm
D = B + C

```
   B ... 19.45
 + C ... 29.7
 ------------
       49.15
```

E = A – D

```
   A ... 49.52
 –D ... 49.15
 ------------
       0.37
```

From the above equation, end play of 0.37 mm exceeds the specified range of 0.05 to 0.15 mm.
Select suitable discs and plates to adjust correctly.

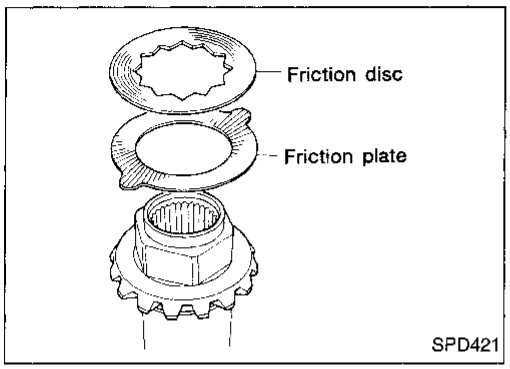

Assembly

Prior to assembling discs and plates, properly lubricate them by dipping them in limited slip differential oil.

1. Alternately position specified number of friction plates and friction discs on rear of side gear.

Always position a friction plate first on rear of side gear.

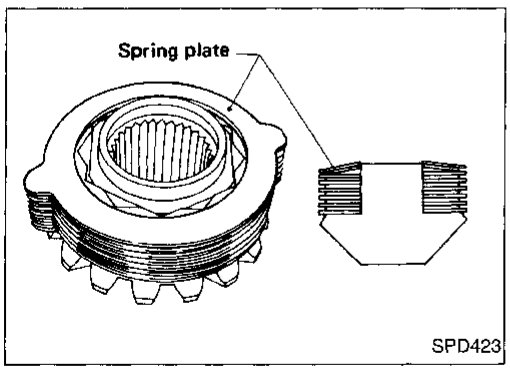

2. Install spring plate.

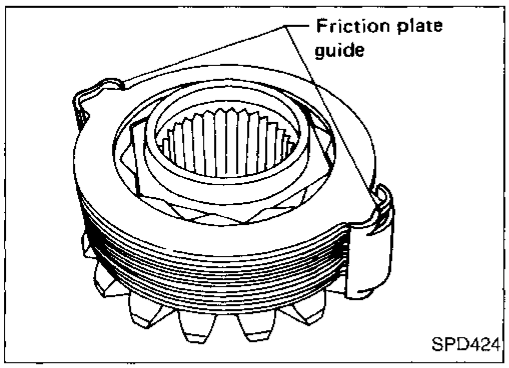

3. Install friction plate guides.

Correctly align the raised portions of friction plates, and apply grease to inner surfaces of friction plate guides to prevent them from falling.

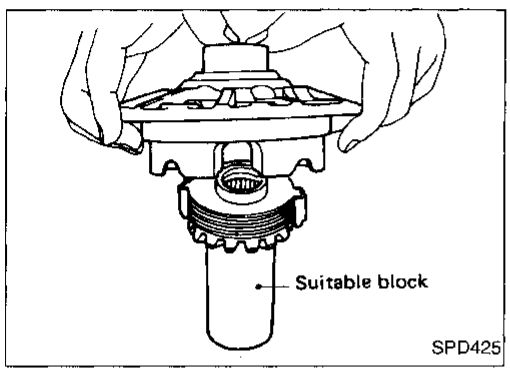

4. Install differential case B over side gear, discs, plates and friction plate guide assembly.

- **Install differential case B while supporting friction plate guides with your middle finger by inserting through oil hole in differential case.**
- **Be careful not to detach spring plate from the hexagonal part of the side gear.**

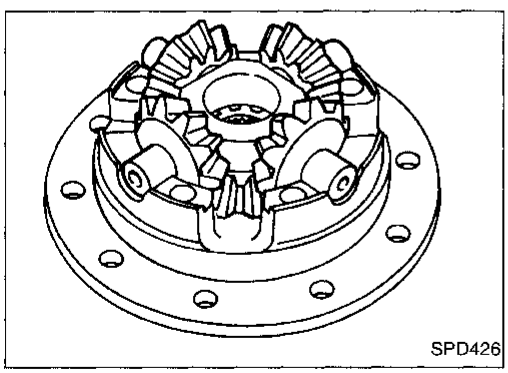

5. Install pinion mate gears and pinion shaft to differential case B.

Assembly (Cont'd)

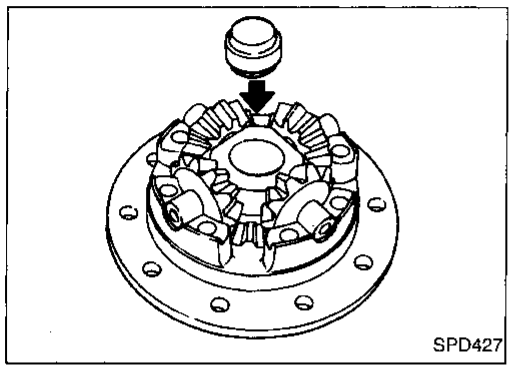

6. Install thrust block.

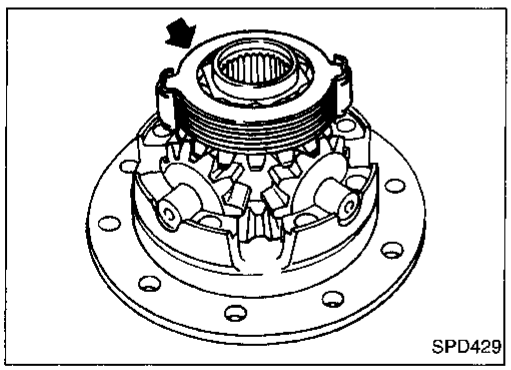

7. Install side gear to pinion mate gears.
8. Install each disc and plate.

Use same procedures as outlined in steps 1. through 3.

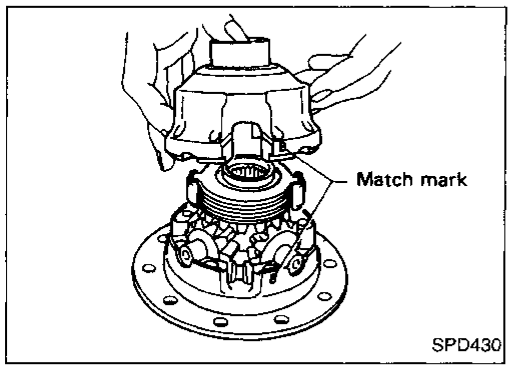

9. Install differential case A.

Position differential cases A and B by correctly aligning marks stamped on cases.

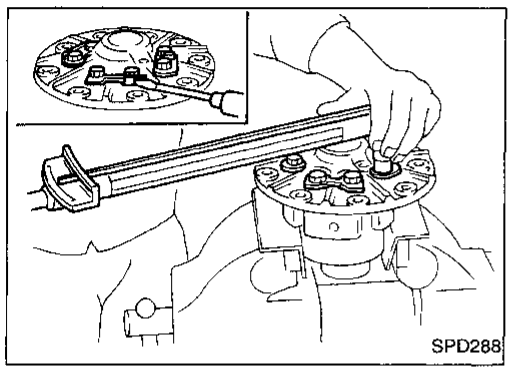

10. Tighten differential case bolts.
11. Place ring gear on differential case and install new lock straps and bolts.

Tighten bolts in a criss-cross fashion, lightly tapping bolt head with a hammer.
Then bend up lock straps to lock the bolts in place.

12. Install side bearing inner cone.
13. Check differential torque.

For quiet and reliable final drive operation, the following five adjustments must be made correctly.
1. Side bearing preload
2. Pinion gear height
3. Pinion bearing preload. Refer to "ASSEMBLY", PD-77.
4. Ring gear-to-pinion backlash. Refer to "ASSEMBLY", PD-78.
5. Ring and pinion gear tooth contact pattern

Side Bearing Preload

A selection of carrier side bearing preload shims is required for successful completion of this procedure.

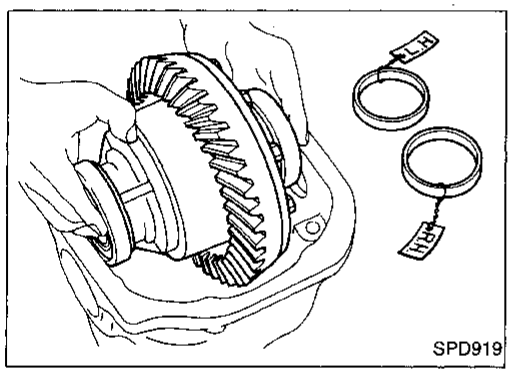

1. Make sure all parts are clean. Make sure, also, the bearings are well lubricated with light oil or type "DEXRON™" automatic transmission fluid.
2. Place the differential carrier, with side bearings and bearing races installed, into the final drive housing.

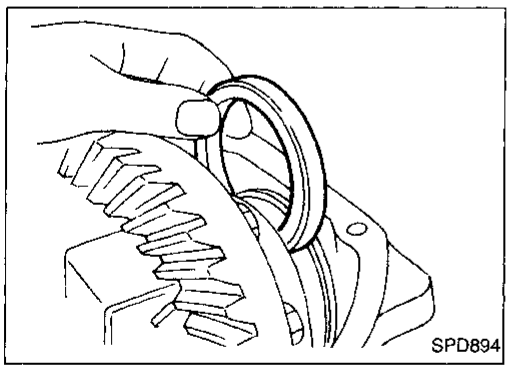

3. Put the side bearing spacer in place.

CAUTION:
Side bearing spacer is placed on either the right or left depending upon final drive gear ratio. Be sure to replace it on the correct side.

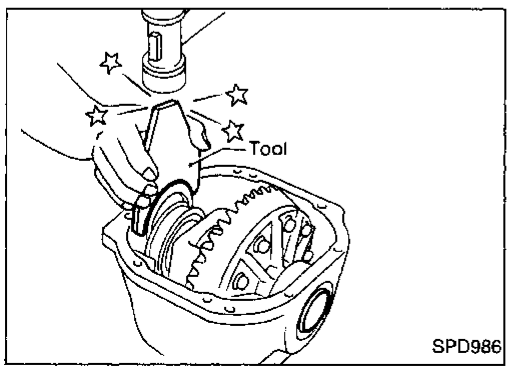

4. Use Tool to place original carrier side bearing preload shims on the carrier end, opposite the ring gear.
   Tool number: KV38100600 (J25267)

Side Bearing Preload (Cont'd)

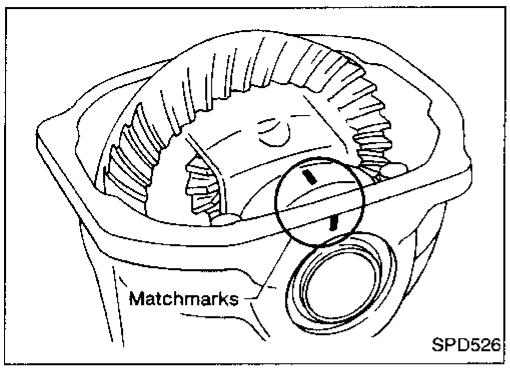

5. Install the side bearing caps in their correct locations and torque the bearing cap retaining bolts.
   Specification:
   88 - 98 N·m
   (9.0 - 10.0 kg-m, 65 - 72 ft-lb)
6. Turn the carrier several times to seat the bearings.

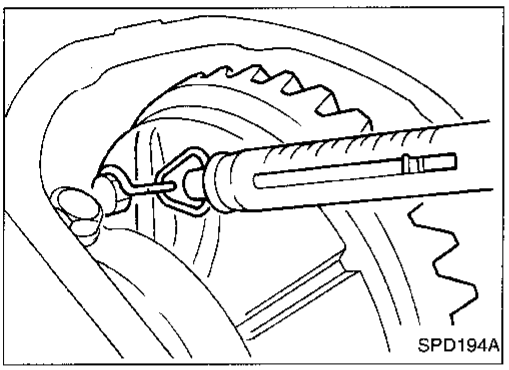

7. Measure the turning torque of the carrier at the ring gear retaining bolts with a spring gauge, J8129.
   Specification:
   34.3 - 39.2 N
   (3.5 - 4.0 kg, 7.7 - 8.8 lb)
   of pulling force at the ring gear bolt

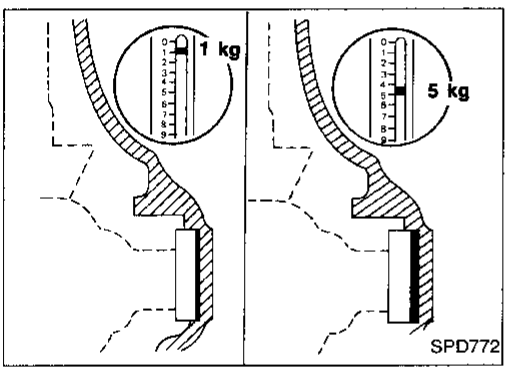

8. If the turning torque is not within the specifications, correct the torque as follows:
   - If the turning torque is less than the specified range, install washers of greater thickness.
   - If the turning torque is greater than the specification, install thinner washers.
   - See the SDS section for washer dimensions and part numbers.
9. Record the total amount of washer thickness required for the correct carrier side bearing preload.

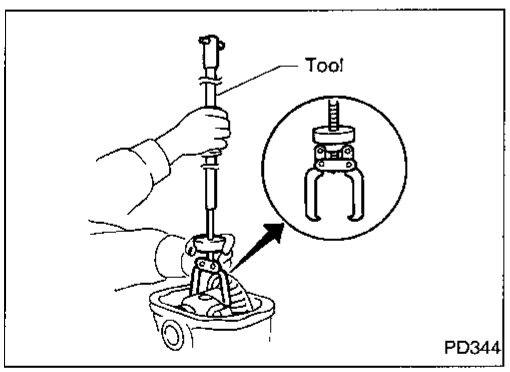

10. Remove the carrier from the final drive housing. Save the selected preload washers for later use during the assembly of the final drive unit.

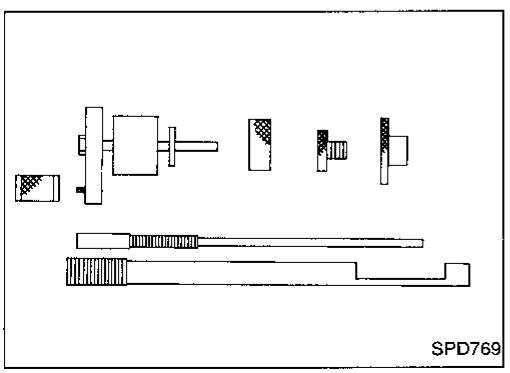

Pinion Gear Height

1. Make sure all parts are clean and that the bearings are well lubricated.
2. Assemble the pinion gear bearings into the pinion preload shim selector Tool, J34309.

Pinion Gear Height (Cont'd)

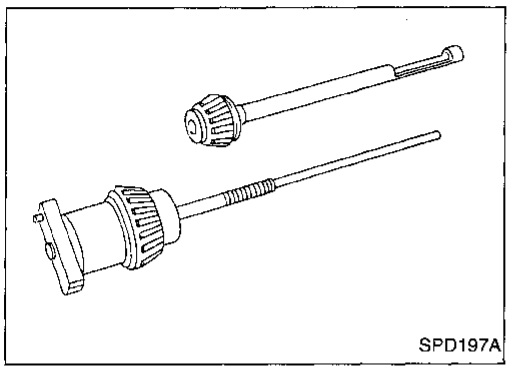
SPD197A

- **Front pinion bearing** — make sure the J34309-3 front pinion bearing seat is secured tightly against the J34309-2 gauge anvil. Then turn the front pinion bearing pilot, J34309-5, to secure the bearing in its proper position.
- **Rear pinion bearing** — the rear pinion bearing pilot, J34309-8, is used to center the rear pinion bearing only. The rear pinion bearing locking seat, J34309-4, is used to lock the bearing to the assembly.

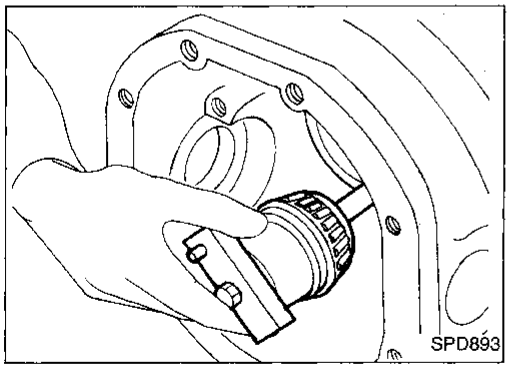
SPD893

3. Install the pinion rear bearing inner cone into the final drive housing. Then place the pinion preload shim selector Tool, J34309-1, gauge screw assembly.

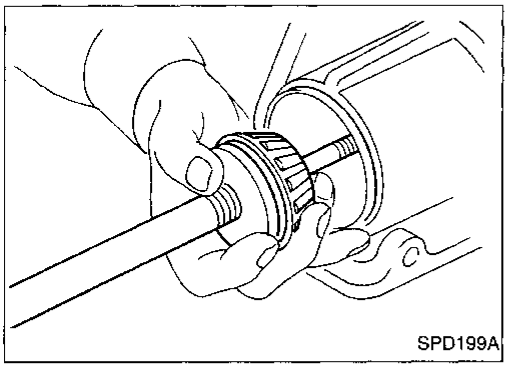
SPD199A

4. Assemble the front pinion bearing inner cone and the J34309-2 gauge anvil. Assemble them together with the J34309-1 gauge screw in the final drive housing. Make sure that the pinion height gauge plate, J34309-16, will turn a full 360 degrees. Tighten the two sections together by hand.

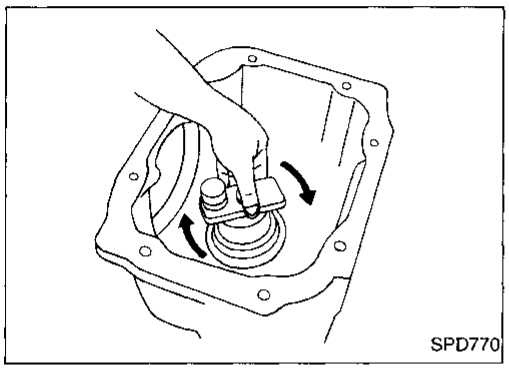
SPD770

5. Turn the assembly several times to seat the bearings.

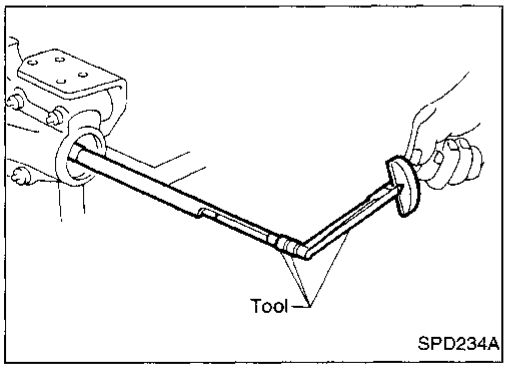

SPD234A

6. Measure the turning torque at the end of the J34309-2 gauge anvil using Tool.
   Tool number: ST3127S000 (J25765-A)
   Turning torque specification:
   1.0 - 1.3 N·m
   (10 - 13 kg-cm, 8.7 - 11.3 in-lb)

Pinion Gear Height (Cont'd)

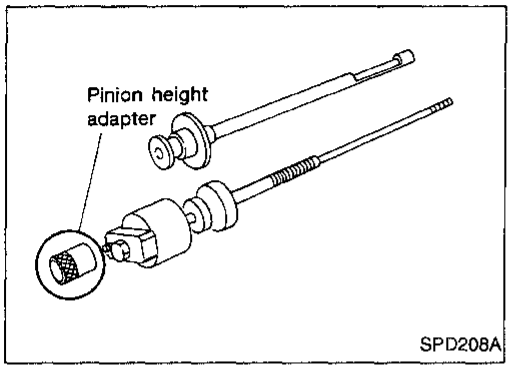

7. Place the J34309-11 pinion height adapter onto the gauge plate and tighten it by hand.

CAUTION:
Make sure all machined surfaces are clean.

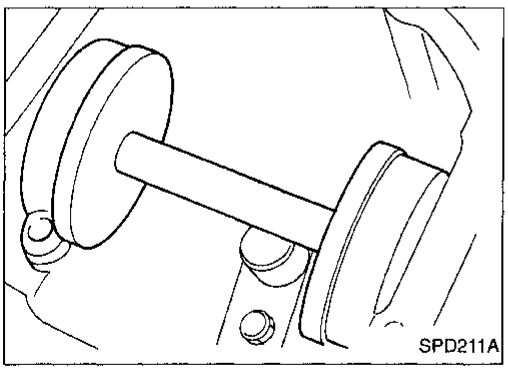

PINION HEIGHT ADJUSTING WASHER SELECTION

8. Now, position the side bearing discs, J25269-4, and arbor firmly into the side bearing bores.
   Install the side bearing caps and tighten the cap bolts to proper torque.

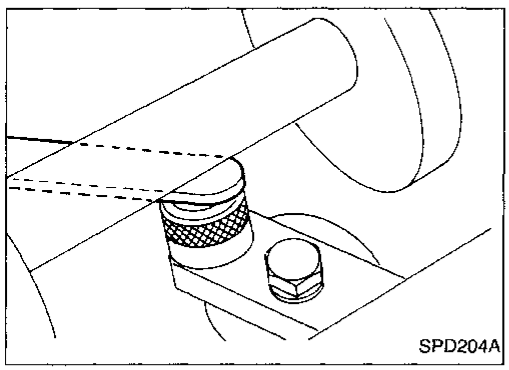

9. Select the correct standard pinion height adjusting washer thickness. Select by using a standard gauge of 3 mm (0.12 in) and J34309-101 feeler gauge. Measure the distance between the J34309-11 pinion height adapter including the standard gauge and the arbor.

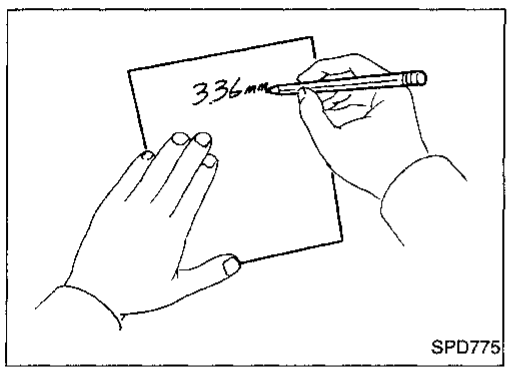

10. Write down your exact measurement (the value of feeler gauge).

Pinion Gear Height (Cont'd)

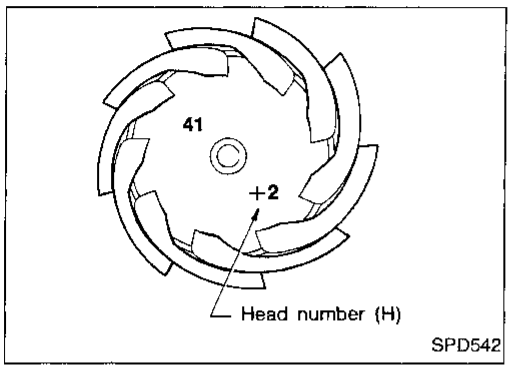

11. Correct the pinion height washer size by referring to the "pinion head number".

There are two numbers painted on the pinion gear. The first one refers to the pinion and ring gear as a matched set. This number should be the same as the number on the ring gear. The second number is the "pinion head height number". It refers to the ideal pinion height from standard for quietest operation. Use the following chart to determine the correct pinion height washer.

Use the following chart to determine the correct pinion height washer:

Pinion head height number	Add or remove from the standard pinion height washer thickness measurement
–6	Add 0.06 mm (0.0024 in)
–5	Add 0.05 mm (0.0020 in)
–4	Add 0.04 mm (0.0016 in)
–3	Add 0.03 mm (0.0012 in)
–2	Add 0.02 mm (0.0008 in)
–1	Add 0.01 mm (0.0004 in)
0	Use the selected washer thickness
+1	Subtract 0.01 mm (0.0004 in)
+2	Subtract 0.02 mm (0.0008 in)
+3	Subtract 0.03 mm (0.0012 in)
+4	Subtract 0.04 mm (0.0016 in)
+5	Subtract 0.05 mm (0.0020 in)
+6	Subtract 0.06 mm (0.0024 in)

12. Select the correct pinion height washer.
    Drive pinion height adjusting washer:
    Refer to SDS, PD-105.

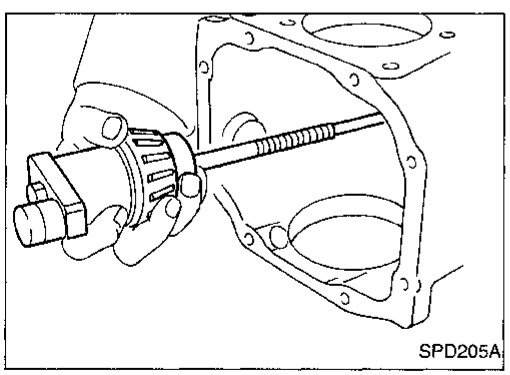

13. Remove the J34309 pinion preload shim selector Tool from the final drive housing. Then disassemble to retrieve the pinion bearings.

Tooth Contact

Checking gear tooth contact pattern is necessary to verify correct relationship between ring gear and drive pinion.
Hypoid gear set which is not positioned properly may be noisy, or have short life or both. With the checking or gear tooth contact pattern, the most desirable contact for low noise level and long life can be assured.

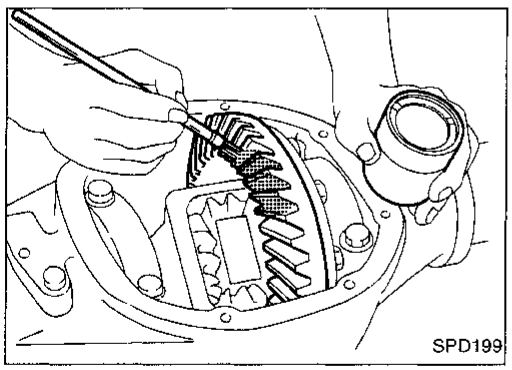

1. Thoroughly clean ring gear and drive pinion teeth.
2. Sparingly apply a mixture of powdered ferric oxide and oil or equivalent to 3 or 4 teeth of ring gear drive side.

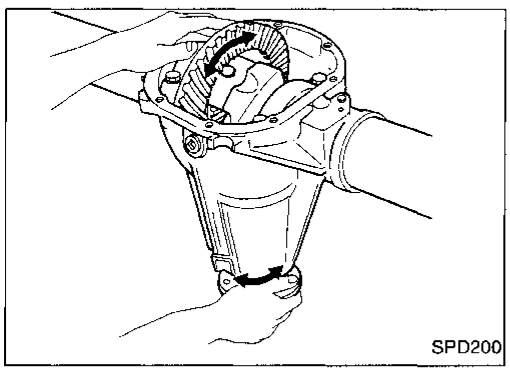

3. Hold companion flange steady and rotate the ring gear in both directions.

Usually the pattern will be correct if you have calculated the shims correctly and the backlash is correct.
However, in rare cases you may have to use trial-and-error processes until you get a good tooth contact pattern.
The tooth pattern is the best indication of how well a differential has been set up.

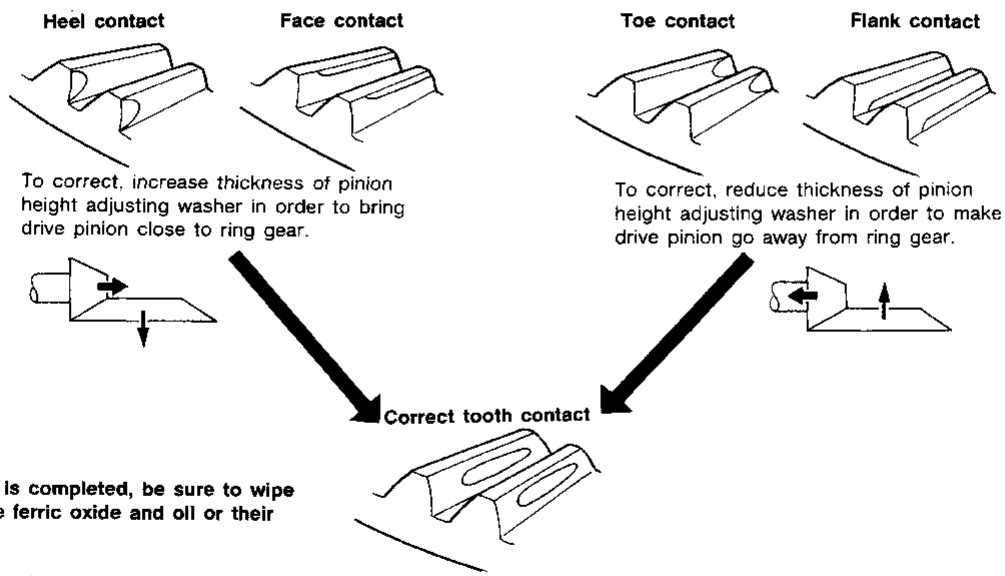

When adjustment is completed, be sure to wipe off completely the ferric oxide and oil or their equivalent.

SPD007

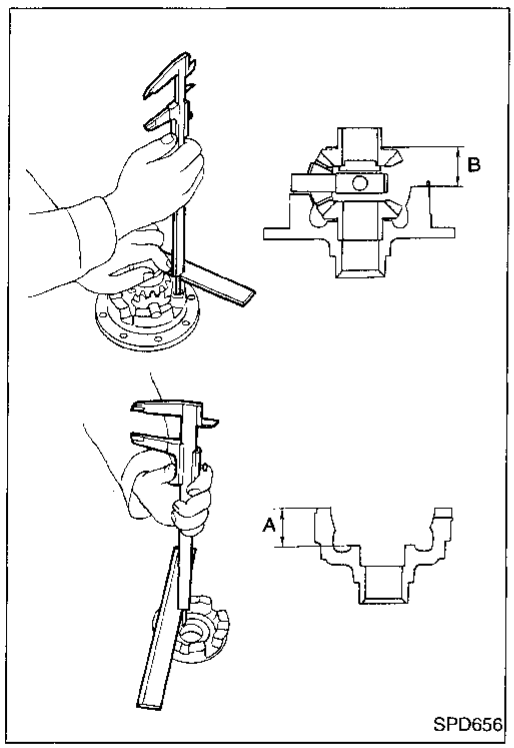

Differential Case

1. Measure clearance between side gear thrust washer and differential case.
   Clearance between side gear thrust washer and differential case (A – B):
   Less than 0.15 mm (0.0059 in)
   The clearance can be adjusted with side gear thrust washer. Refer to SDS, PD-105.
2. Apply gear oil to gear tooth surfaces and thrust surfaces and check to see they turn properly.

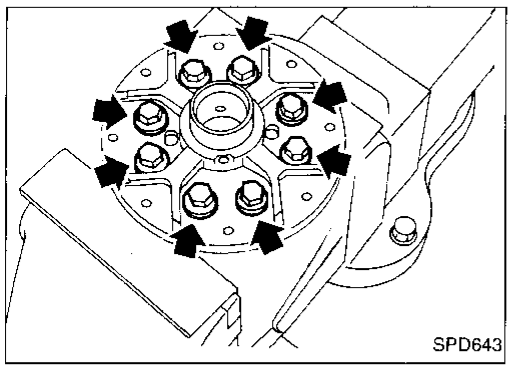

3. Install differential case LH and RH.

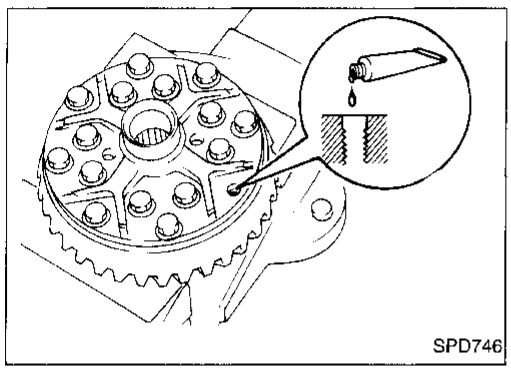

4. Place differential case on ring gear.
5. Apply locking agent [Locktite (stud lock) or equivalent] to ring gear bolts, and install them.

Tighten bolts in a criss-cross fashion, lightly tapping bolt head with a hammer.

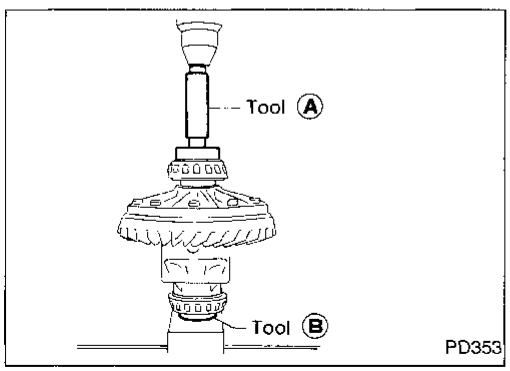

6. Press-fit side bearing inner cones on differential case with Tool.
   Tool numbers:
   Ⓐ ST33230000 (J25805-01)
   Ⓑ ST33061000 (J8107-2)

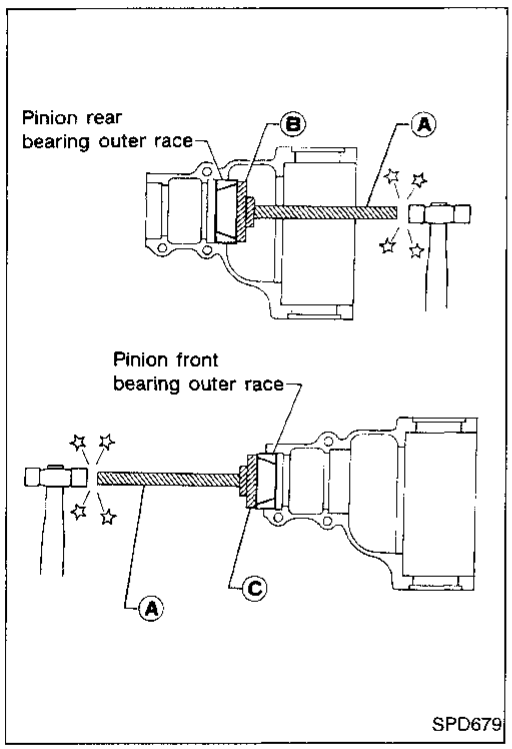

Differential Carrier

1. Press-fit front and rear bearing outer races with Tools.
   Tool numbers:
   - **Ⓐ ST30611000 (J25742-1)**
   - **Ⓑ ST30621000 (J25742-5)**
   - **Ⓒ ST30613000 (J25742-3)**

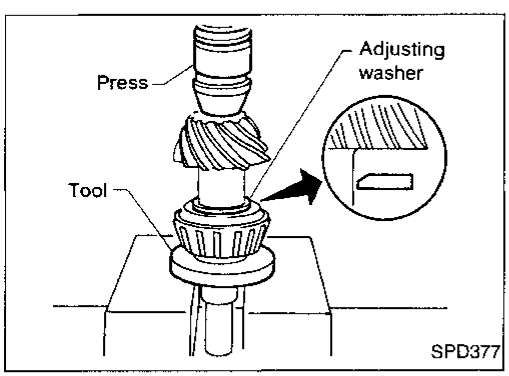

2. Select pinion height adjusting washer. Refer to "ADJUSTMENT", PD-70.
3. Install pinion height adjusting washer in drive pinion, and press-fit rear bearing inner cone in it, with press and Tool.
   Tool number: ST30901000 (J26010-01)

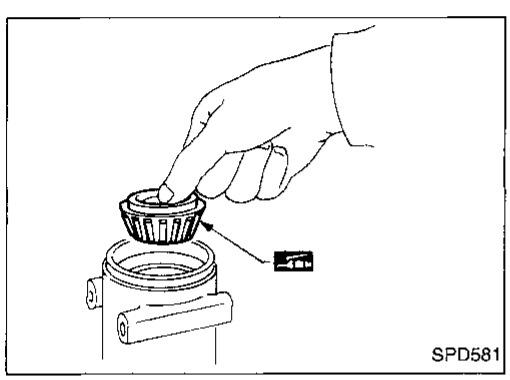

4. Place pinion front bearing inner cone in gear carrier.

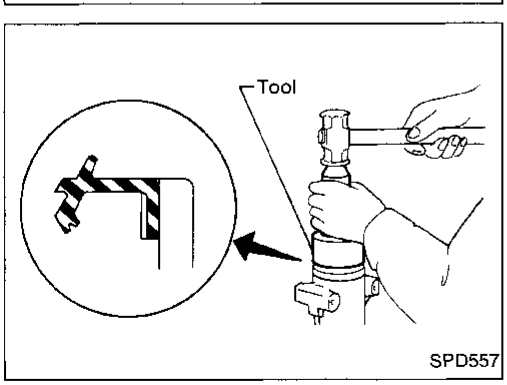

5. Apply multi-purpose grease to cavity at sealing lips of oil seal. Install front oil seal.
   Tool number: KV38100500 (J25273)

Differential Carrier (Cont'd)

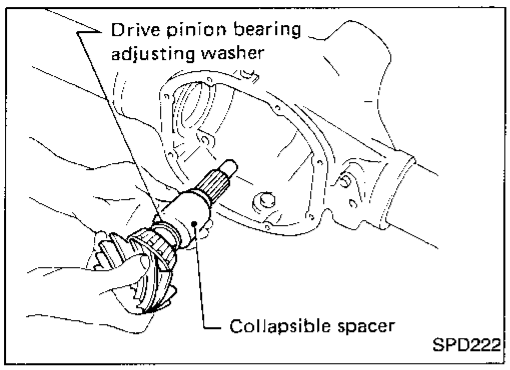

6. Place drive pinion bearing spacer, drive pinion bearing adjusting washer and drive pinion in gear carrier.

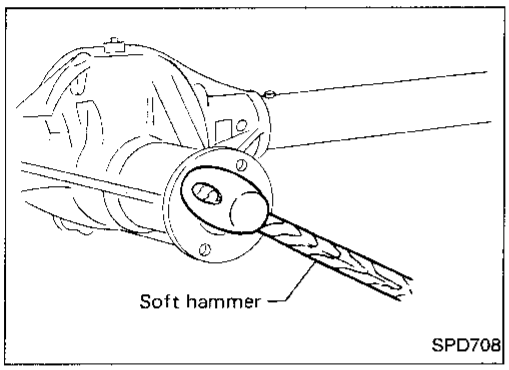

7. Insert companion flange into drive pinion by tapping the companion flange with a soft hammer.

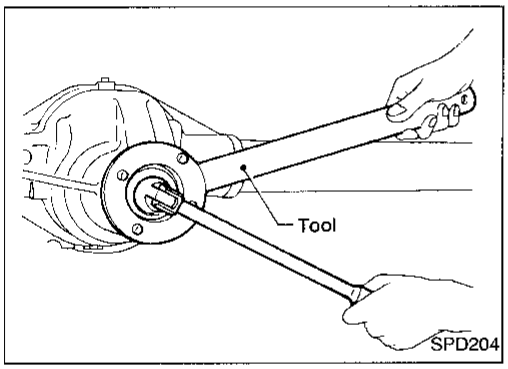

8. Tighten pinion nut to 127 N·m (13 kg-m, 94 ft-lb).

The threaded portion of drive pinion and pinion nut should be free from oil or grease.

Tool number: ST38060002 (J34311)

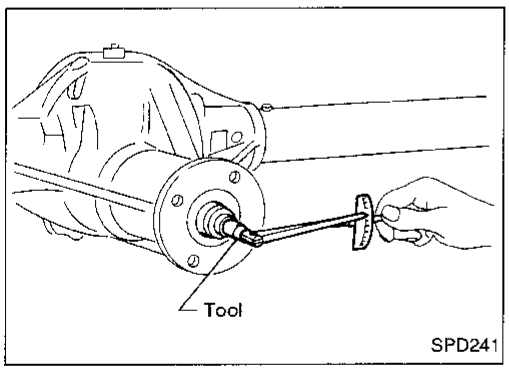

9. Tighten the pinion nut by very small degrees until the specified preload is achieved. When checking the preload, turn the drive pinion in both directions several times to set the bearing rollers.

Tool number: ST3127S000 (J25765-A)

Pinion bearing preload:

1.1 - 1.7 N·m

(11 - 17 kg-cm, 9.5 - 14.8 in-lb)

This procedure will have to be repeated if:

- **Maximum preload is achieved before the minimum pinion nut torque is reached.**
- **Minimum preload is not achieved before maximum pinion nut torque is reached.**

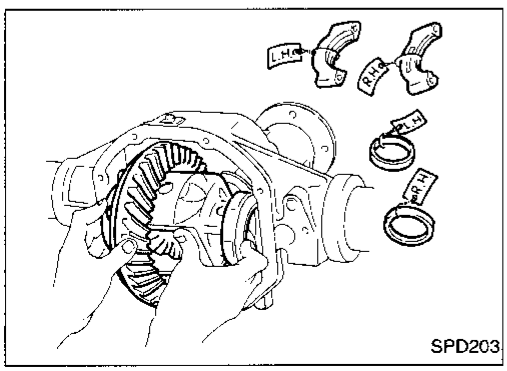

10. Select side bearing adjusting washer.
    Refer to Adjustment.
11. Install differential case assembly with side bearing outer races into gear carrier.

Differential Carrier (Cont'd)

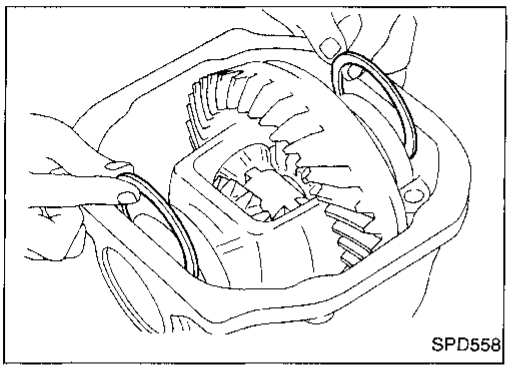

12. Insert left and right side bearing adjusting washers in place between side bearing and carrier.

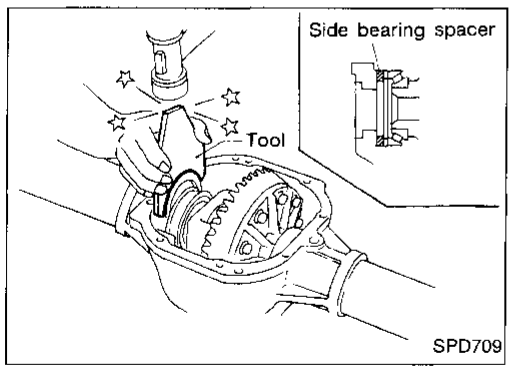

13. Drive in side bearing spacer with Tool.
    Tool number: KV38100600 (J25267)

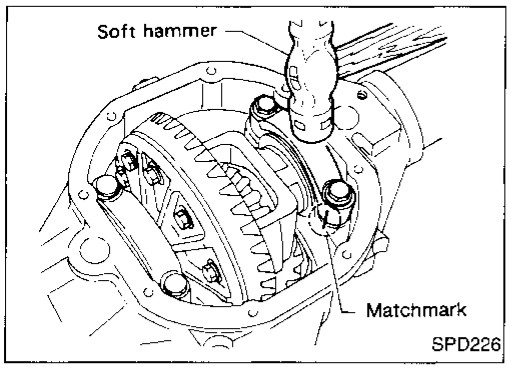

14. Align mark on bearing cap with that on gear carrier and install bearing cap on gear carrier.

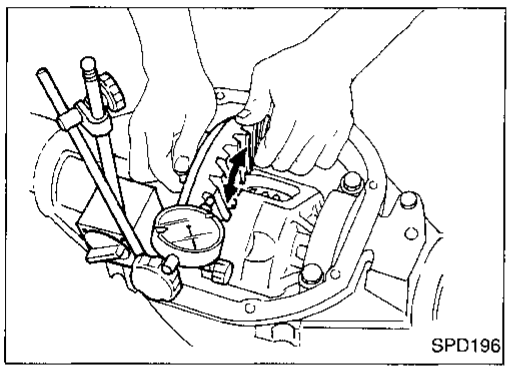

15. Measure ring gear-to-drive pinion backlash with a dial indicator.
    Ring gear-to-drive pinion backlash:
    0.13 - 0.18 mm
    (0.0051 - 0.0071 in)

- If backlash is too small, decrease thickness of right shim and increase thickness of left shim by the same amount.
  If backlash is too great, reverse the above procedure.

Never change the total amount of shims as it will change the bearing preload.

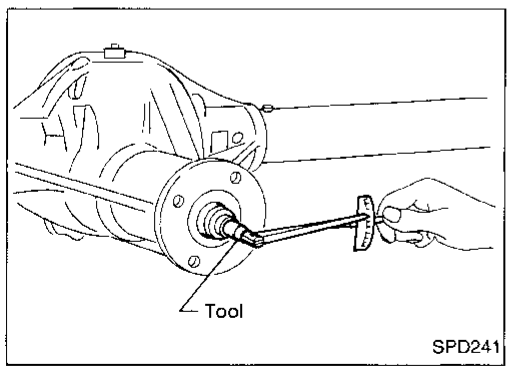

16. Check total preload with Tool.

When checking preload, turn drive pinion in both directions several times to seat bearing rollers correctly.

Total preload:
1.2 - 2.3 N·m
(12 - 23 kg-cm, 10 - 20 in-lb)
Tool number: ST3127S000 (J25765-A)

Differential Carrier (Cont'd)

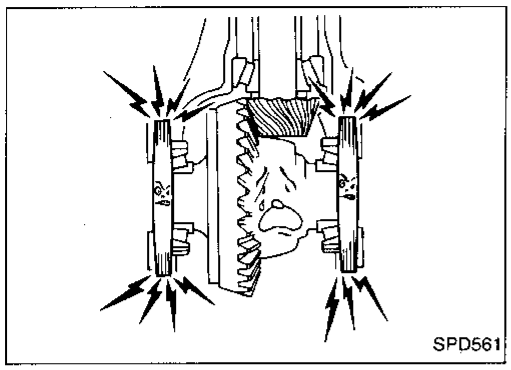

- If preload is too great, remove the same amount of shim from each side.
- If preload is too small, add the same amount of shim to each side.

Never add or remove a different number of shims for each side as it will change ring gear-to-drive pinion backlash.

17. Recheck ring gear-to-drive pinion backlash because increase or decrease in thickness of shims will cause change of ring gear-to-pinion backlash.

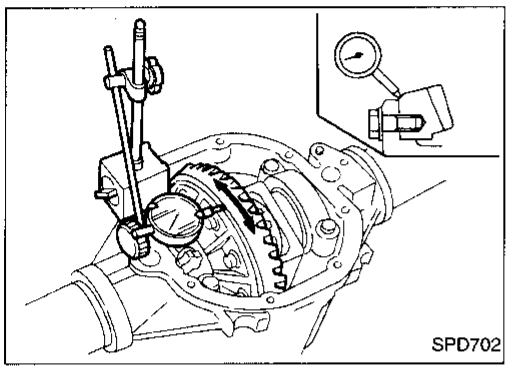

18. Check runout of ring gear with a dial indicator.
    Runout limit:
    0.05 mm (0.0020 in)
- If backlash varies excessively in different places, the variance may have resulted from foreign matter caught between the ring gear and the differential case.
- If the backlash varies greatly when the runout of the ring gear is within a specified range, the hypoid gear set or differential case should be replaced.

19. Check tooth contact.
    Refer to "ADJUSTMENT", PD-74.
20. Install rear cover and gasket.

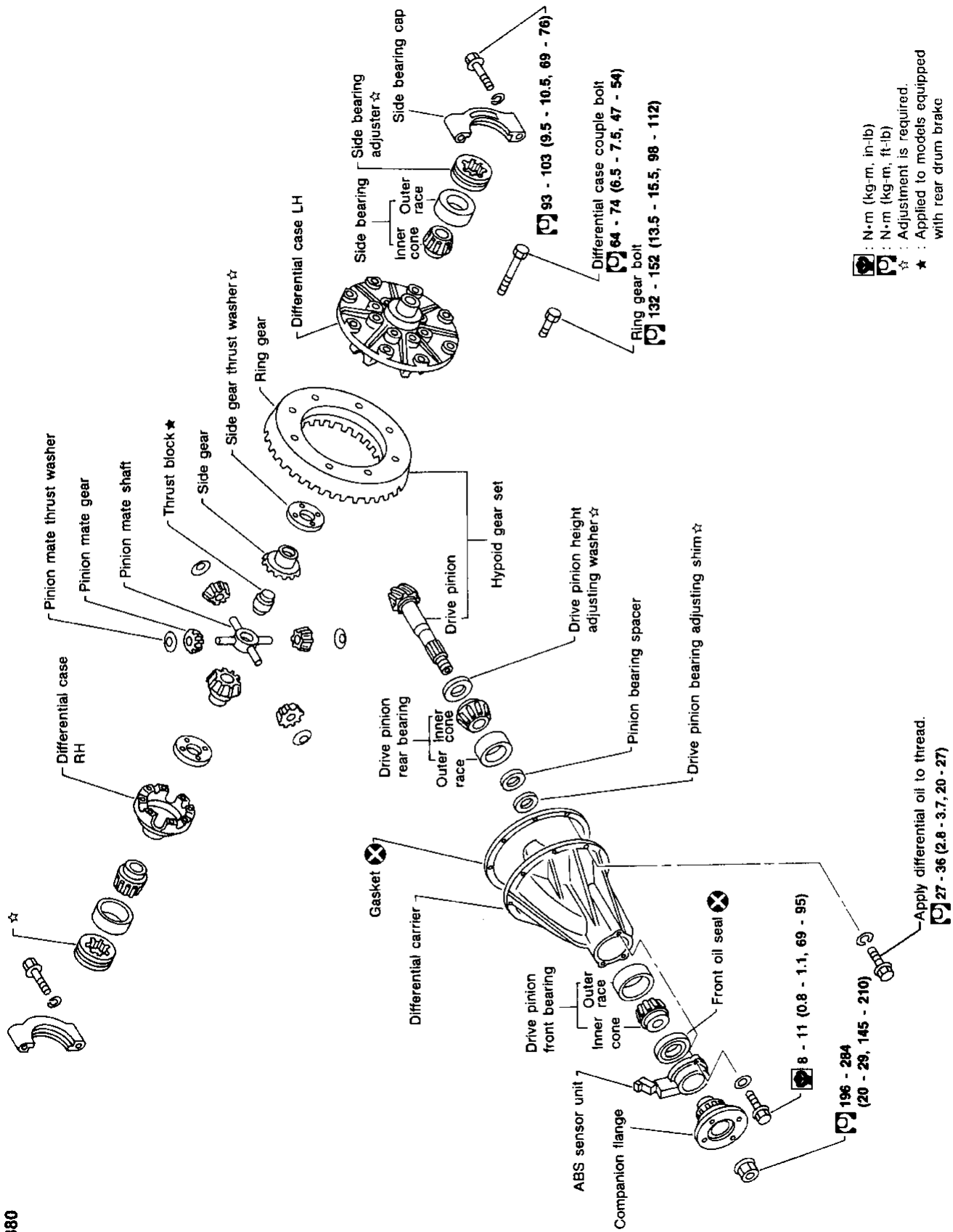
Pinion mate thrust washer
Pinion mate gear
Pinion mate shaft
Thrust block ★
Side gear
Side gear thrust washer ☆
Ring gear
Differential case LH
Side bearing
Inner cone
Outer race
Side bearing adjuster ☆
Side bearing cap
93 - 103 (9.5 - 10.5, 69 - 76)
Differential case couple bolt
64 - 74 (6.5 - 7.5, 47 - 54)
Ring gear bolt
132 - 152 (13.5 - 15.5, 98 - 112)
Differential case RH
Drive pinion
Hypoid gear set
Drive pinion height adjusting washer ☆
Drive pinion rear bearing
Inner cone
Outer race
Pinion bearing spacer
Drive pinion bearing adjusting shim ☆
Gasket
Differential carrier
Drive pinion front bearing
Outer race
Inner cone
Front oil seal
8 - 11 (0.8 - 1.1, 69 - 95)
ABS sensor unit
Companion flange
196 - 284 (20 - 29, 145 - 210)
Apply differential oil to thread.
27 - 36 (2.8 - 3.7, 20 - 27)
: N•m (kg-m, in-lb)
: N•m (kg-m, ft-lb)
☆ : Adjustment is required.
★ : Applied to models equipped with rear drum brake
APD005

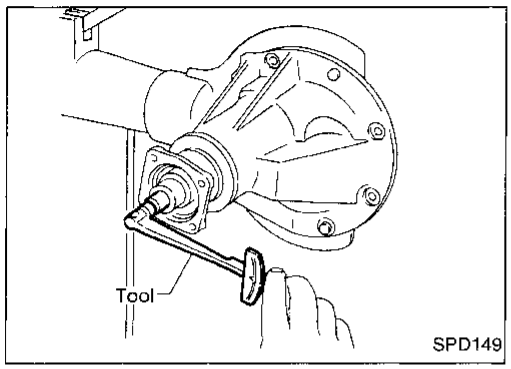

Pre-inspection

Before disassembling final drive, perform the following inspection.

- Total preload

a. Turn drive pinion in both directions several times to seat bearing rollers correctly.

b. Check total preload with Tool.

Total preload:
1.7 - 2.5 N·m
(17 - 25 kg-cm, 15 - 22 in-lb)
Tool number: ST3127S000 (J25765-A)

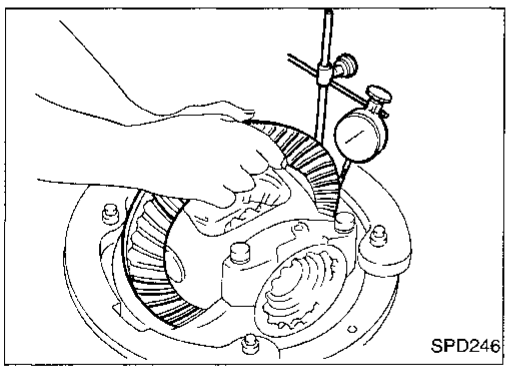

- Ring gear-to-drive pinion backlash

Check backlash of ring gear with a dial indicator at several points.

Ring gear-to-drive pinion backlash:
0.15 - 0.20 mm (0.0059 - 0.0079 in)

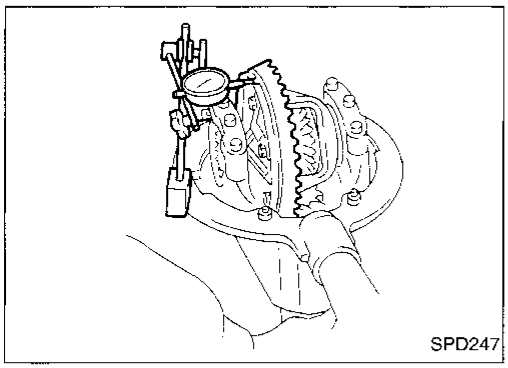

- Ring gear runout

Check runout of ring gear with a dial indicator.

Runout limit:
0.08 mm (0.0031 in)

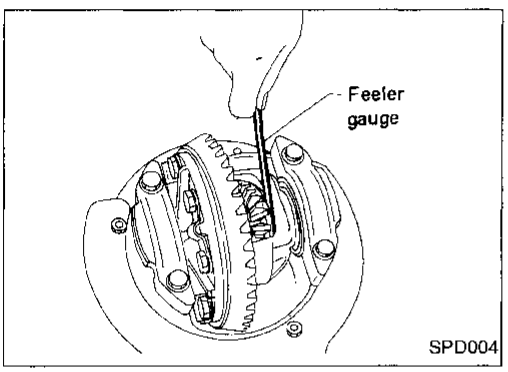

- Tooth contact

Check tooth contact, referring to "ADJUSTMENT", PD-95.

- Side gear-to-pinion mate gear backlash

Measure clearance between side gear thrust washer and differential case with a feeler gauge.

Clearance between side gear thrust washer and differential case:
Less than 0.15 mm (0.0059 in)

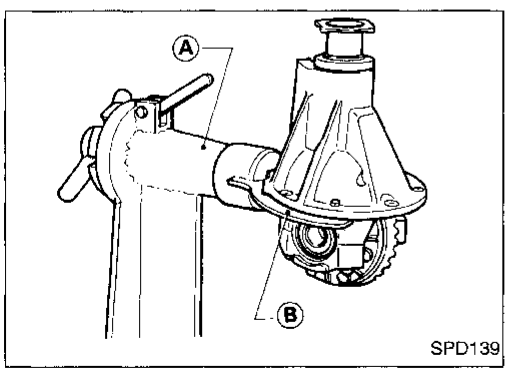

Differential Carrier

1. Mount final drive assembly on Tool.

Tool numbers: Ⓐ ST0501S000 (—)
Ⓑ ST06340000 (J24310)

Differential Carrier (Cont'd)

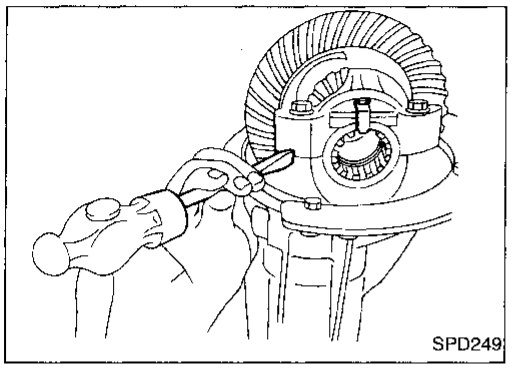

2. Put match marks on one side of side bearing cap with paint or punch to ensure that it is replaced in proper position during reassembly.

Bearing caps are line-bored during manufacture and should be put back in their original places.

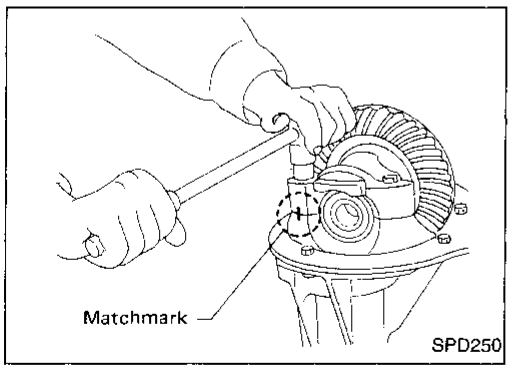

3. Remove side lock fingers and side bearing caps.

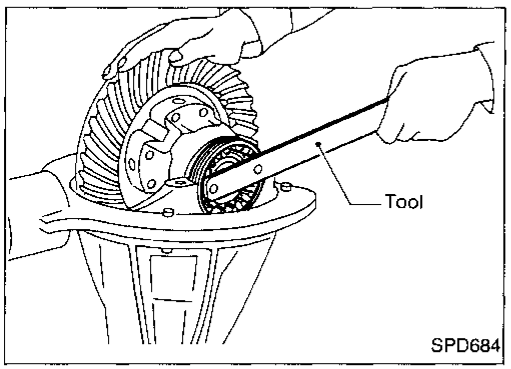

4. Remove side bearing adjuster with Tool.
   Tool number: ST32580000 (J34312)

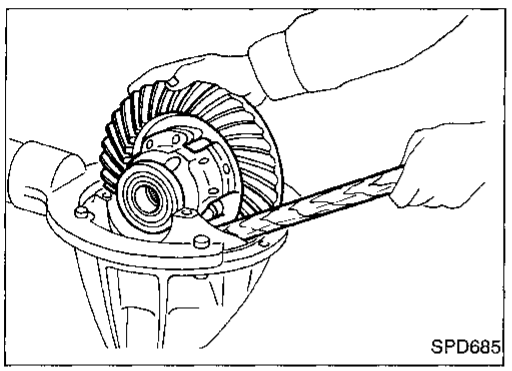

5. Remove differential case assembly with a pry bar.

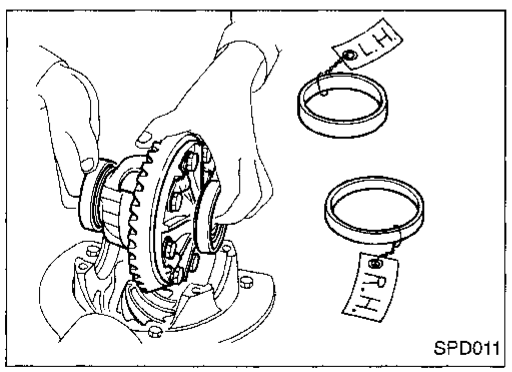

Keep the side bearing outer races together with their respective inner cones — do not mix them up.

Differential Carrier (Cont'd)

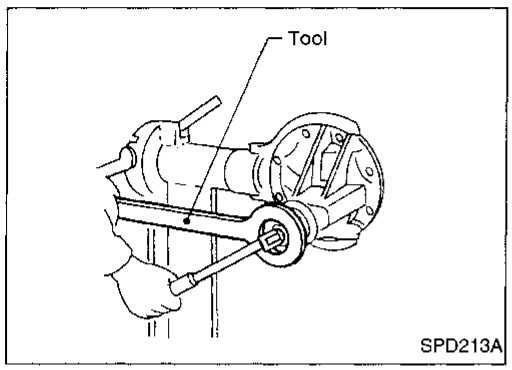

6. Remove drive pinion nut with Tool.
   Tool number: KV38104700 (J34311)
7. Remove companion flange with puller.
8. Remove ABS sensor.

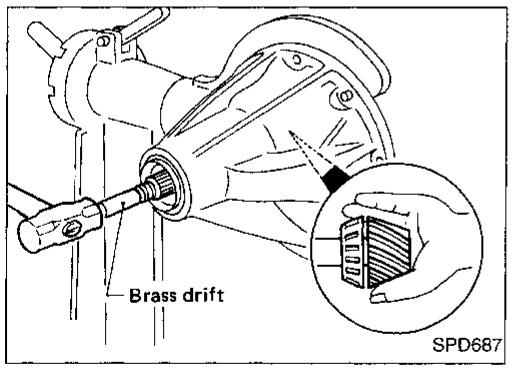

9. Take out drive pinion together with pinion rear bearing inner cone, drive pinion bearing spacer and pinion bearing adjusting shim.

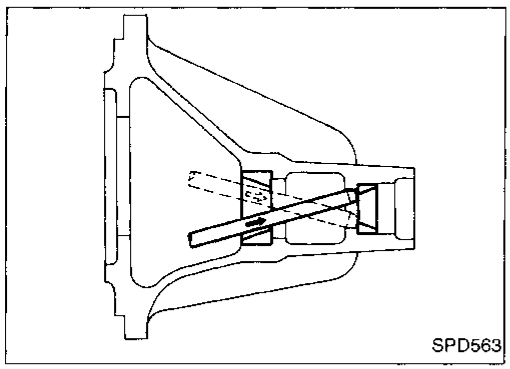

10. Remove front oil seal and pinion front bearing inner cone.
11. Remove pinion bearing outer races with a brass drift.

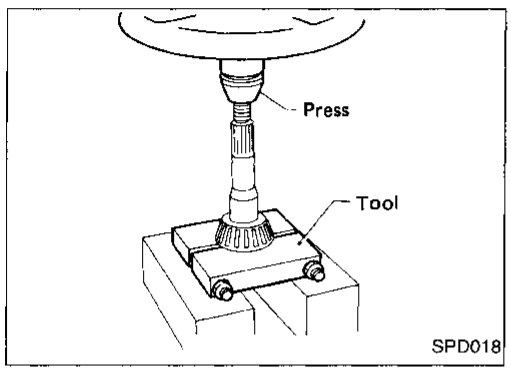

12. Remove pinion rear bearing inner cone and drive pinion adjusting washer.
    Tool number: ST30031000 (J22912-01)

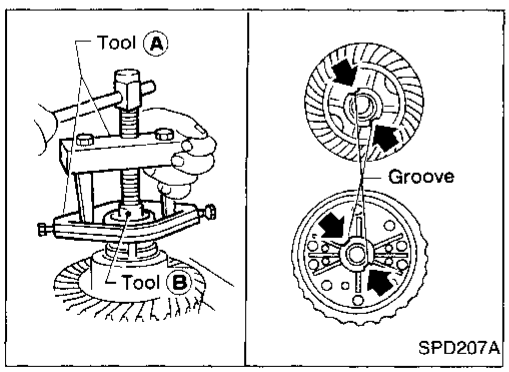

Differential Case

1. Remove side bearing inner cones.

To prevent damage to bearing, engage puller jaws in groove.

Tool numbers:
- **Ⓐ ST33051001 (J22888-20)**
- **Ⓑ ST33061000 (J8107-2)**

Differential Case (Cont'd)

Be careful not to confuse the left and right hand parts.

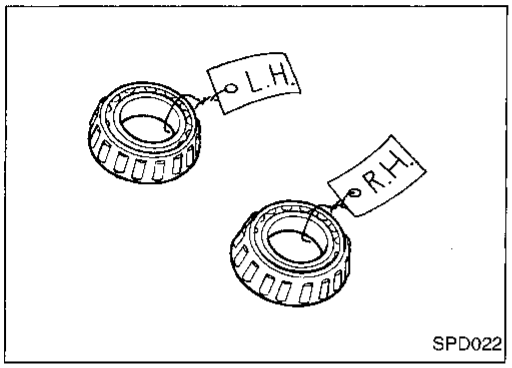

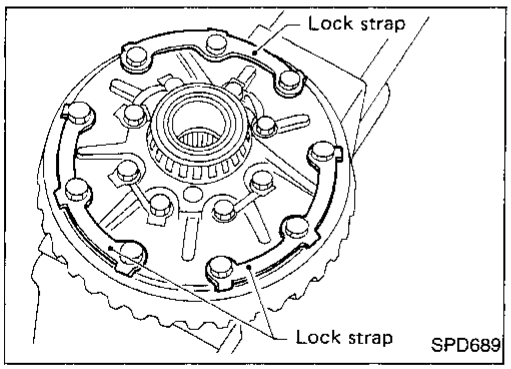

2. Spread out lock straps and loosen ring gear bolts in a criss-cross fashion.

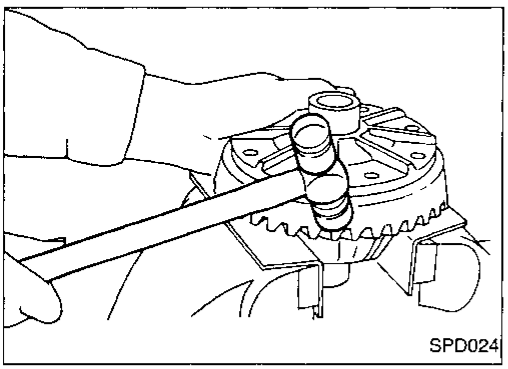

3. Tap ring gear off differential case with a soft hammer.

Tap evenly all around to keep ring gear from binding.

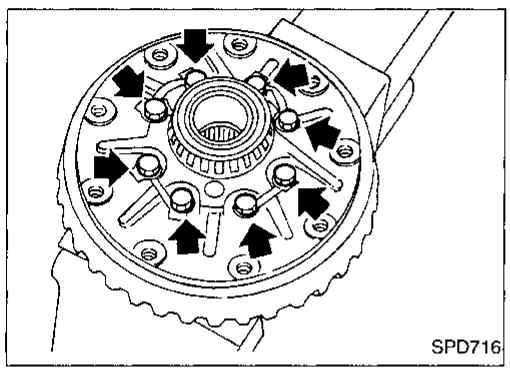

4. Separate differential case LH and RH.

Put match marks on both differential case LH and RH sides prior to separating them.

Ring Gear and Drive Pinion

Check gear teeth for scoring, cracking or chipping.
If any damaged part is evident, replace ring gear and drive pinion as a set (hypoid gear set).

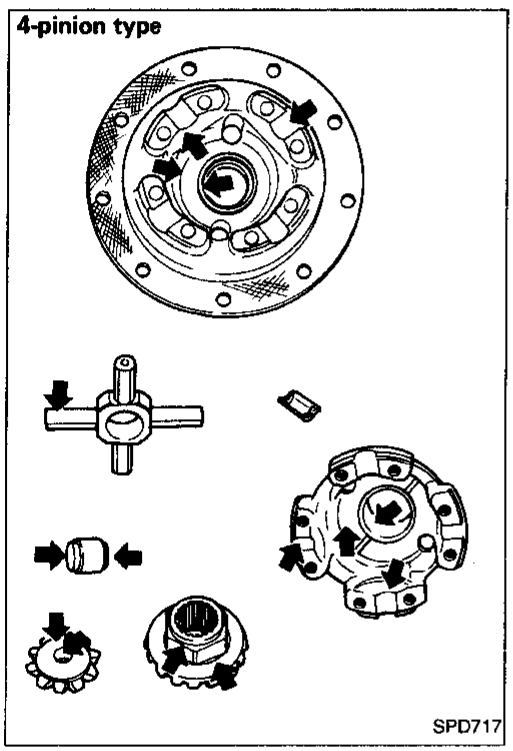

Differential Case Assembly

Check mating surfaces of differential case, side gears, pinion mate gears, pinion mate shaft, and thrust washers.

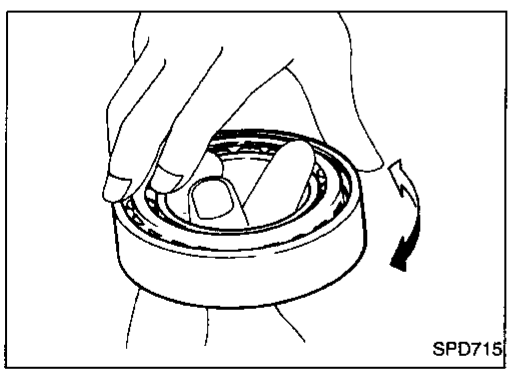

Bearing

1. Thoroughly clean bearing.
2. Check bearings for wear, scratches, pitting or flaking.
   Check tapered roller bearing for smooth rotation. If damaged, replace outer race and inner cone as a set.

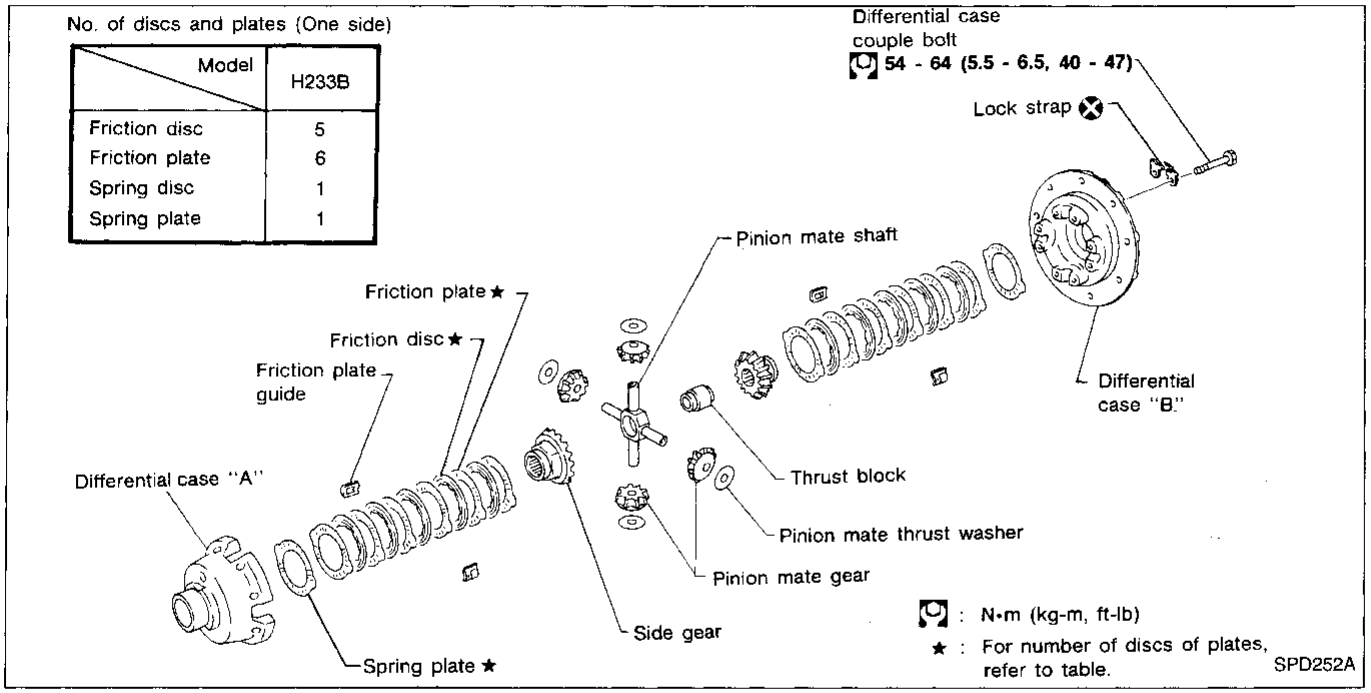

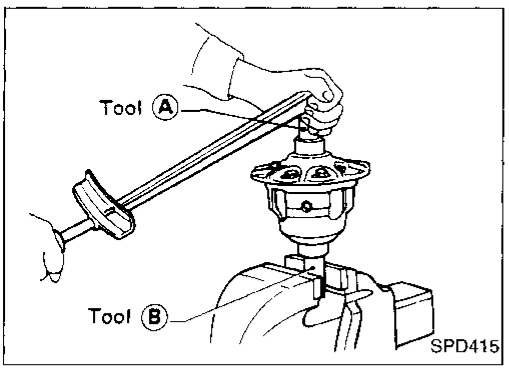

CAUTION:
Do not run engine when only one wheel (rear) is off the ground.

Preparation for Disassembly

CHECKING DIFFERENTIAL TORQUE

Measure differential torque with Tools.
If it is not within the specifications, inspect components of limited slip differential.

Differential torque:
201 - 240 N·m
(20.5 - 24.5 kg-m, 148 - 177 ft-lb)
Tool numbers:
Ⓐ KV38105210 (—)
Ⓑ KV38105220 (—)

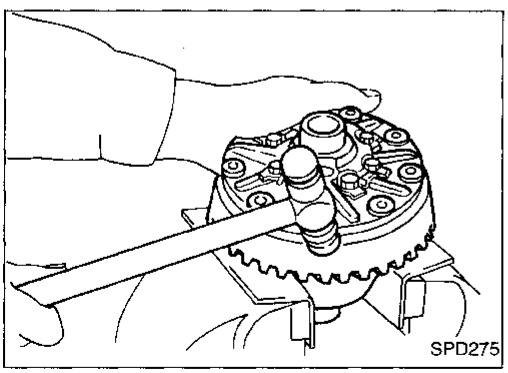

Disassembly

1. Remove side bearing inner cone with Tool.
2. Remove ring gear by spreading out lock straps.
3. Loosen ring gear bolts in a criss-cross fashion.
4. Tap ring gear off gear case with a soft hammer.

Tap evenly all around to keep ring gear from binding.

Disassembly (Cont'd)

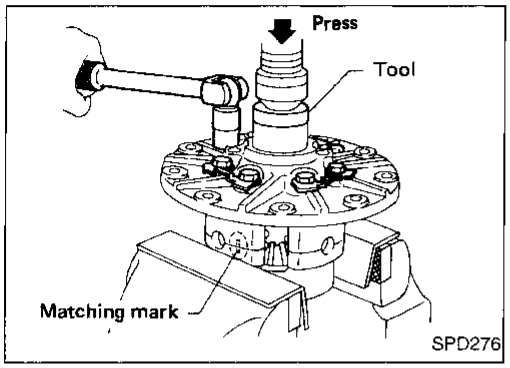

5. Remove differential case by spreading out lock straps.
6. Remove couple bolts on differential cases A and B with a press.
   Tool number: ST33081000 (—)
7. Separate differential cases A and B.
   Draw out component parts (discs and plates, etc.).

Put marks on gears and pressure rings so that they can be reinstalled in their original positions.

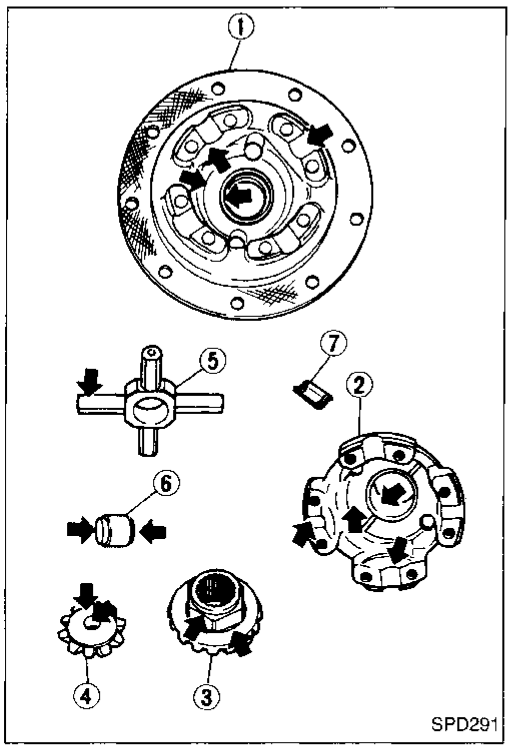

Inspection

CONTACT SURFACES

1. Clean the disassembled parts in suitable solvent and blow dry with compressed air.
2. If the following surfaces are found with burrs or scratches, smooth with oil stone.
   ① Differential case B
   ② Differential case A
   ③ Side gear
   ④ Pinion mate gear
   ⑤ Pinion mate shaft
   ⑥ Thrust block
   ⑦ Friction plate guide

DISC AND PLATE

1. Clean the discs and plates in suitable solvent and blow dry with compressed air.
2. Inspect discs and plates for wear, nicks and burrs.

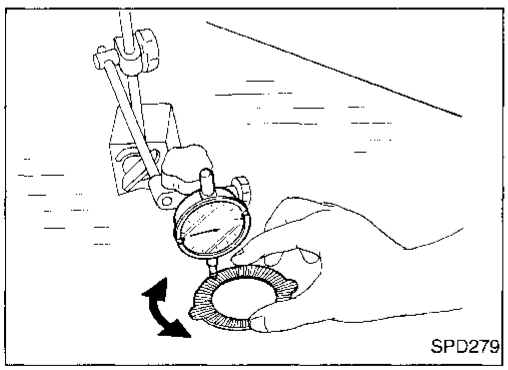

3. Check friction discs or plates for warpage.
   Allowable warpage:
   0.08 mm (0.0031 in)
   If it exceeds limits, replace with a new plate to eliminate possibility of clutch slippage or sticking.

Inspection (Cont'd)

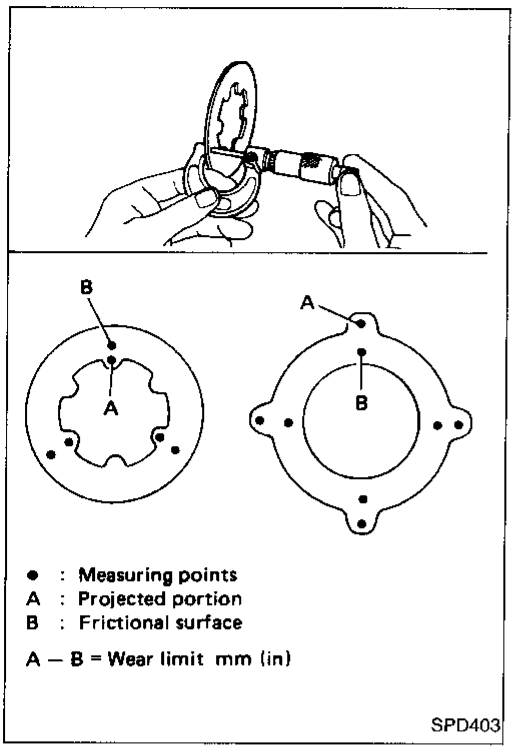

4. Measure frictional surfaces and projected portions of friction discs, plates, spring disc and plate.
   If any part has worn beyond the wear limit, replace it with a new one that is the same thickness as the projected portion.
   Wear limit:
   0.1 mm (0.004 in) or less

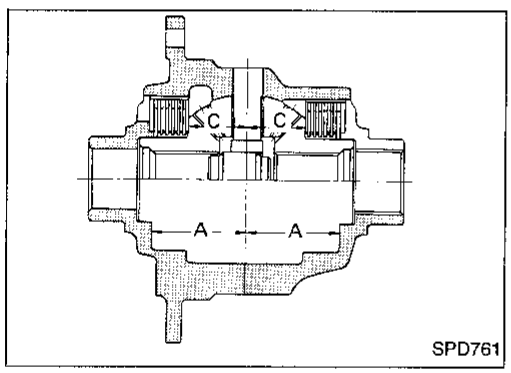

Adjustment

FRICTION DISC AND FRICTION PLATE END PLAY

End play of friction disc and friction plate can be calculated by using the following equation and should be adjusted within the following range.
Adjustment can be made by selecting friction disc having two different thicknesses.

End play E:
0.05 - 0.15 mm (0.0020 - 0.0059 in)
E = A – (B + C)

A: Length of differential case contact surface to differential case inner bottom.
B: Total thickness of friction discs, friction plates, spring disc and spring plate in differential case on one side.
C: Length of differential case contact surface to back side of side gear.

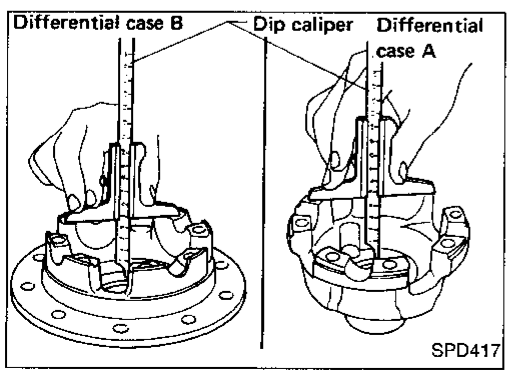

1. Measure values of "A".
   Standard length A:
   49.50 - 49.55 mm (1.9488 - 1.9508 in)

Adjustment (Cont'd)

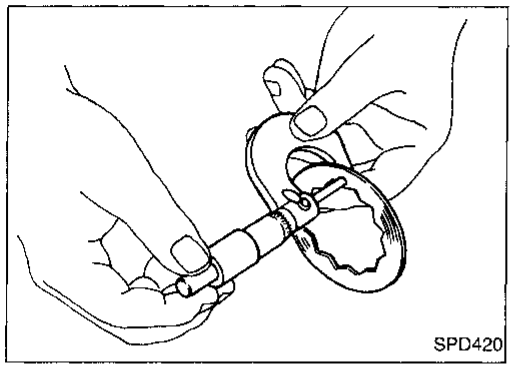

2. Measure thickness of each disc and plate.
   Total thickness "B":
   19.24 - 20.26 mm (0.7575 - 0.7976 in)
   No. of discs and plates (One side):
   Friction disc 5
   Friction plate 6
   Spring disc 1
   Spring plate 1

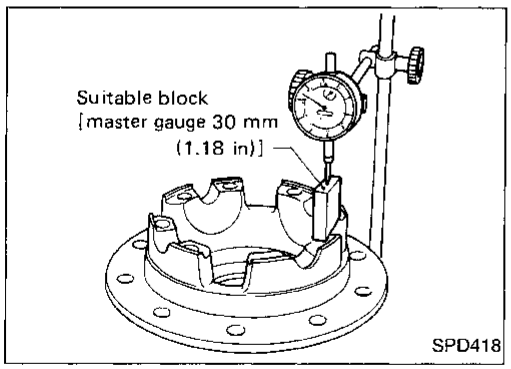

3. Measure values of "C".
a. Attach a dial indicator to the base plate.
b. Place differential case B on the base plate, and install a master gauge on case B.

Then adjust the dial indicator scale to zero with its tip on the master gauge.

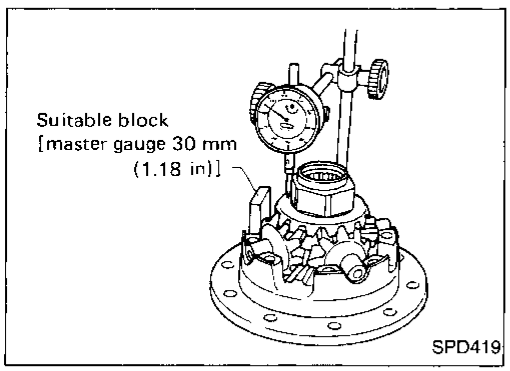

c. Install pinion mate gears, side gears and pinion mate shaft in differential case B.
d. Set dial indicator's tip on the side gear, and read the indication.

Example:

E = A – D = A – (B + C) = 0.05 to 0.15 mm
A = 49.52 mm
B = 19.45 mm
C = 29.7 mm

D = B + C	E = A – D
B ... 19.45	A ... 49.52
+C ... 29.7	–D ... 49.15
49.15	0.37

From the above equation, end play of 0.37 mm exceeds the specified range of 0.05 to 0.15 mm.
Select suitable discs and plates to adjust correctly.

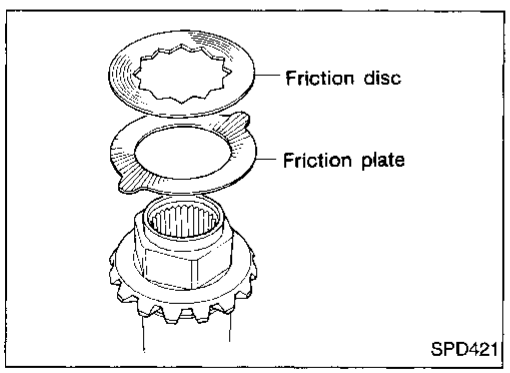

Assembly

Prior to assembling discs and plates, properly lubricate them by dipping them in limited slip differential oil.

1. Alternately position specified number of friction plates and friction discs on rear of side gear.

Always position a friction plate first on rear of side gear.

Assembly (Cont'd)

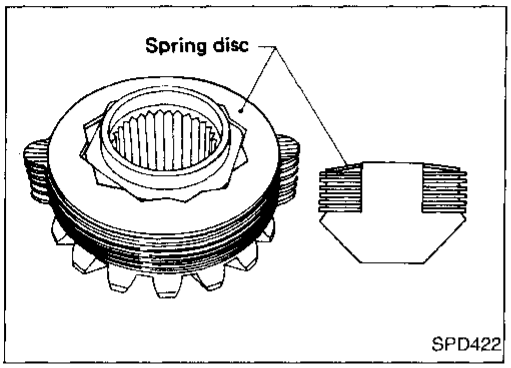

2. Install spring disc.

Align the twelve angular holes in spring disc with the hexagonal area of the side gear.

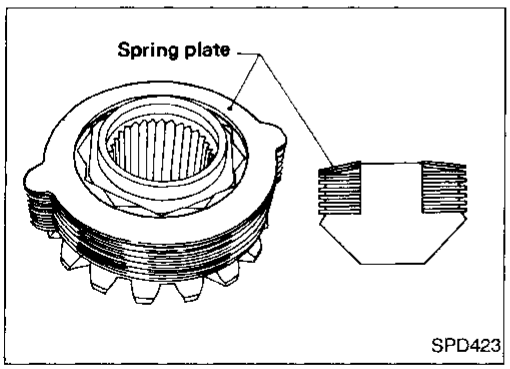

3. Install spring plate.

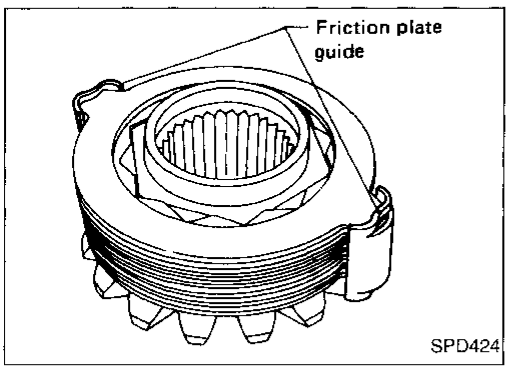

4. Install friction plate guides.

Correctly align the raised portions of friction plates, and apply grease to inner surfaces of friction plate guides to prevent them from falling.

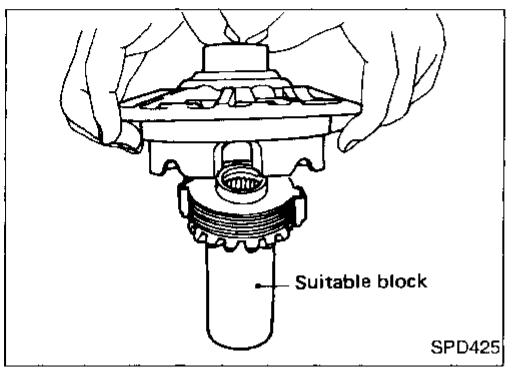

5. Install differential case B over side gear, discs, plates and friction plate guide assembly.

- **Install differential case B while supporting friction plate guides with your middle finger by inserting through oil hole in differential case.**
- **Be careful not to detach spring disc from the hexagonal part of the side gear.**

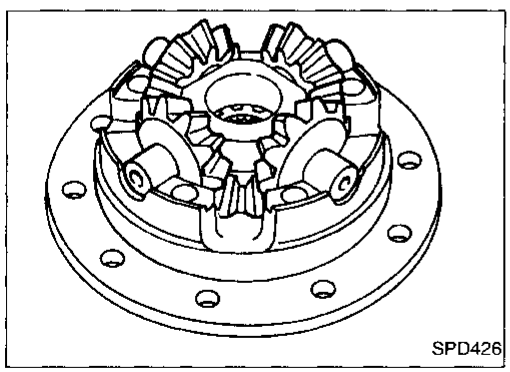

6. Install pinion mate gears and pinion shaft to differential case B.

Assembly (Cont'd)

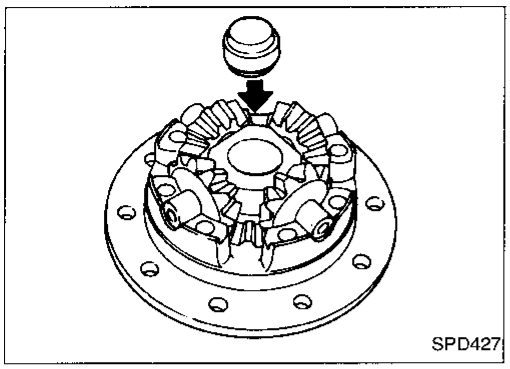

7. Install thrust block.

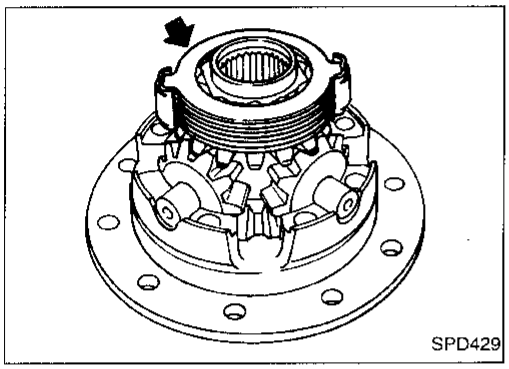

8. Install side gear to pinion mate gears.
9. Install each disc and plate.

Use same procedures as outlined in steps 1. through 4.

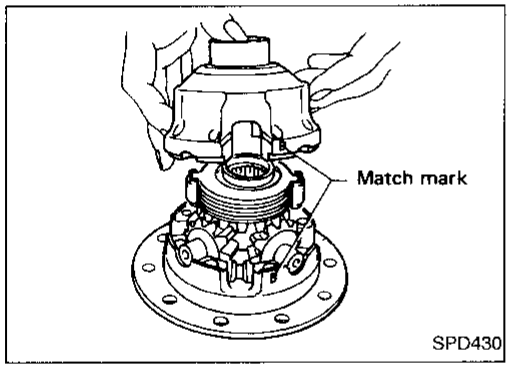

10. Install differential case A.

Position differential cases A and B by correctly aligning marks stamped on cases.

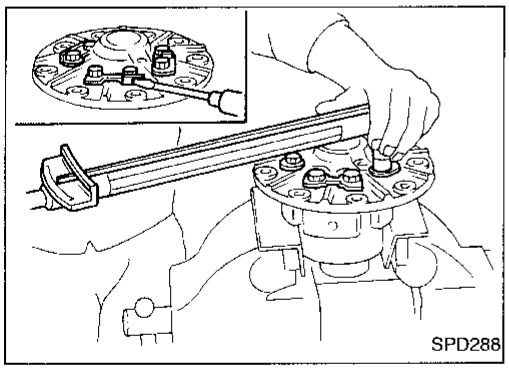

11. Tighten differential case bolts.
12. Place ring gear on differential case and install new lock straps and bolts.

Tighten bolts in a criss-cross fashion, lightly tapping bolt head with a hammer.
Then bend up lock straps to lock the bolts in place.

13. Install side bearing inner cone.
14. Check differential torque.

For quiet and reliable final drive operation, the following five adjustments must be made correctly:
1. Side bearing preload
2. Pinion gear height
3. Pinion bearing preload. Refer to "ASSEMBLY", PD-98.
4. Ring gear-to-pinion backlash. Refer to "ASSEMBLY", PD-99.
5. Ring and pinion gear tooth contact pattern

Pinion Gear Height

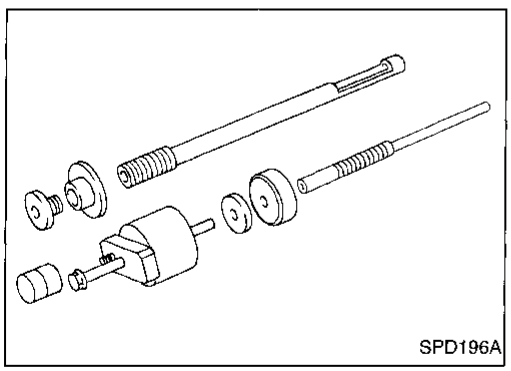
SPD196A

1. Make sure all parts are clean and that the bearings are well lubricated.
2. Assemble the pinion gear bearings into the pinion pre-load shim selector Tool, J34309.

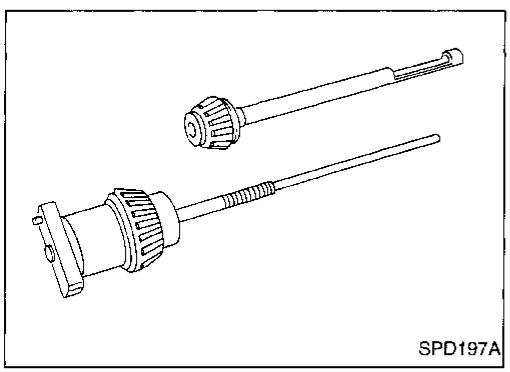
SPD197A

- **Rear Pinion Bearing** — the rear pinion bearing pilot, J34309-8, is used to center the rear pinion bearing only. The rear pinion bearing locking seat, J34309-4, is used to lock the bearing to the assembly.
- **Front Pinion Bearing** — make sure the J34309-3, front pinion bearing seat is secured tightly against the J34309-2 gauge anvil. Then turn the front pinion bearing pilot, J34309-5, to secure the bearing in its proper position.

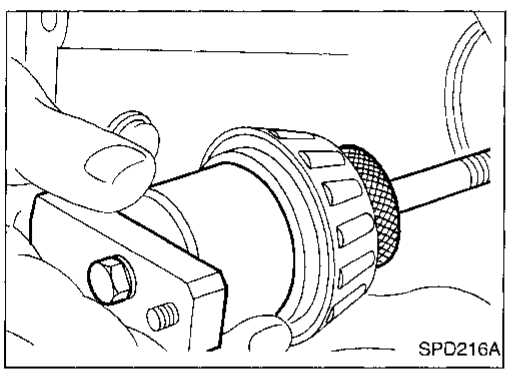
SPD216A

3. Place the pinion preload shim selector Tool gauge screw assembly, J34309-1, with the pinion rear bearing inner cone installed, into the final drive housing.

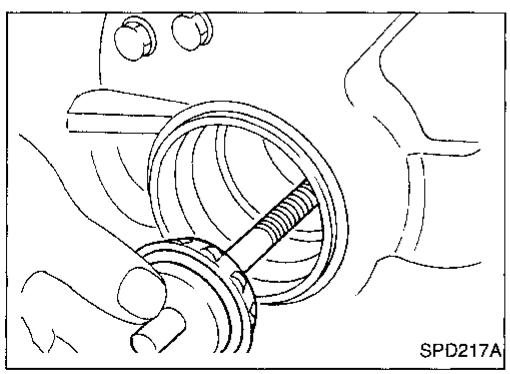
SPD217A

4. Install the J34309-2 gauge anvil with the front pinion bearing into the final drive housing and assemble it to the J34309-1 gauge screw. Make sure that the J34309-16 gauge plate will turn a full 360 degrees, and tighten the two sections by hand to set bearing pre-load.
5. Turn the assembly several times to seat the bearings.

Pinion Gear Height (Cont'd)

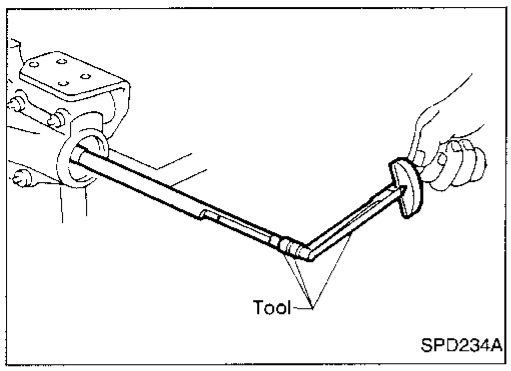

6. Measure the turning torque at the end of the J34309-2 gauge anvil using Tool.
   Tool number: ST3127S000 (J25765-A)
   Turning torque specification:
   0.4 - 0.9 N·m (4 - 9 kg-cm, 3.5 - 7.8 in-lb)

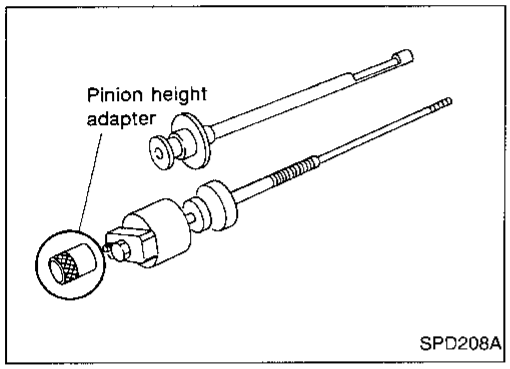

7. Place the J34309-12 "H233B" pinion height adapter onto the gauge plate and tighten it by hand.

CAUTION:
Make sure all machined surfaces are clean.

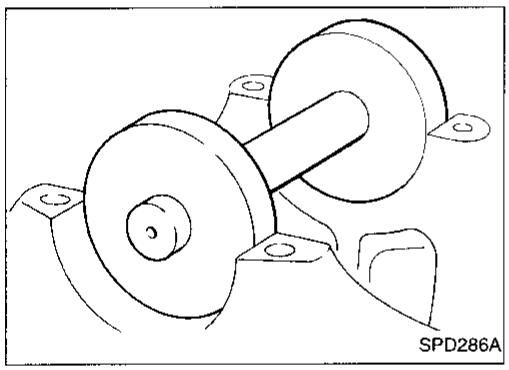

PINION HEIGHT ADJUSTING WASHER SELECTION

8. Position the J25269-18 side bearing discs and the arbor into the side bearing bores.

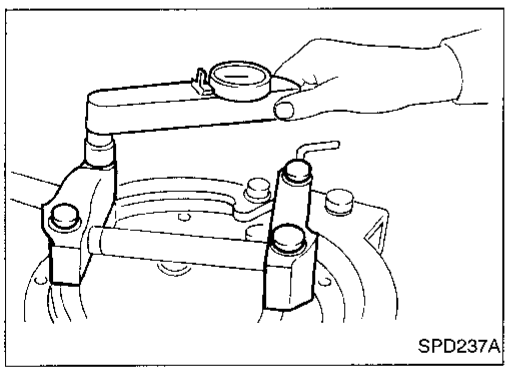

9. Install the bearing caps and torque the bolts.
   Specification:
   [O]: 93 - 103 N·m (9.5 - 10.5 kg-m, 69 - 76 ft-lb)

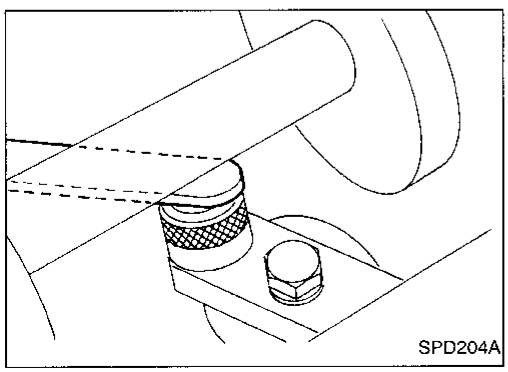

10. Select the correct standard pinion height adjusting washer thickness using a standard gauge of 2.5, 3.0, or 3.5 mm (0.098, 0.118, or 0.138 in) and J34309-101 feeler gauge. Measure the distance between the J34309-12 "H233B" pinion height adapter and the arbor.

Pinion Gear Height (Cont'd)

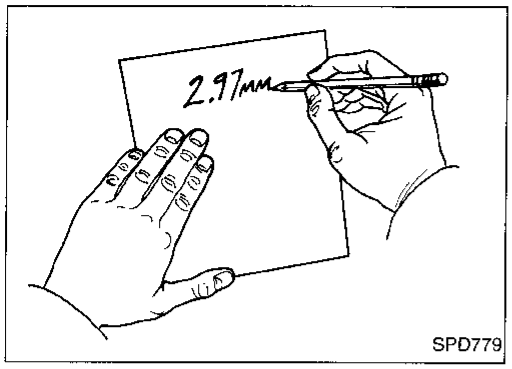

SPD779

11. Write down your exact total measurement.

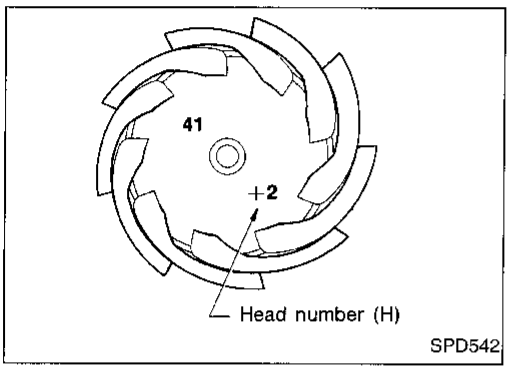

SPD542

12. Correct the pinion height washer size by referring to the "pinion head height number".

There are two numbers painted on the pinion gear. The first one refers to the pinion and ring gear as a matched set and should be the same as the number on the ring gear. The second number is the "pinion head height number," and it refers to the ideal pinion height from standard for the quietest operation. Use the following chart to determine the correct pinion height washer.

Pinion Head Height Number	Add or Remove from the Selected Standard Pinion Height Washer Thickness Measurement
–6	Add 0.06 mm (0.0024 in)
–5	Add 0.05 mm (0.0020 in)
–4	Add 0.04 mm (0.0016 in)
–3	Add 0.03 mm (0.0012 in)
–2	Add 0.02 mm (0.0008 in)
–1	Add 0.01 mm (0.0004 in)
0	Use the selected washer thickness
+1	Subtract 0.01 mm (0.0004 in)
+2	Subtract 0.02 mm (0.0008 in)
+3	Subtract 0.03 mm (0.0012 in)
+4	Subtract 0.04 mm (0.0016 in)
+5	Subtract 0.05 mm (0.0020 in)
+6	Subtract 0.06 mm (0.0024 in)

13. Select the correct pinion height washer.
    Drive pinion height adjusting washer:
    Refer to SDS, PD-106.

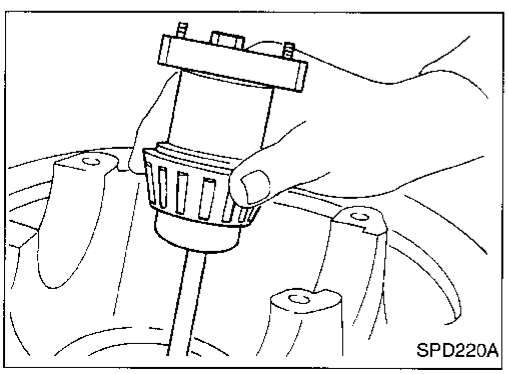
SPD220A

14. Remove the J34309 pinion preload shim selector tool from the final drive housing and disassemble to retrieve the pinion bearings.

Tooth Contact

Gear tooth contact pattern check is necessary to verify correct relationship between ring gear and drive pinion.
Hypoid gear sets which are not positioned properly may be noisy, or have short life or both. With a pattern check, the most desirable contact for low noise level and long life can be assured.

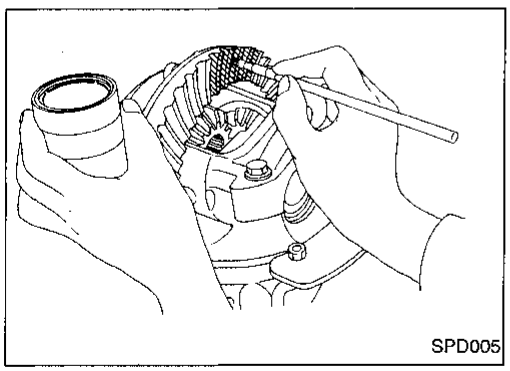
SPD005

1. Thoroughly clean ring gear and drive pinion teeth.
2. Sparingly apply a mixture of powdered ferric oxide and oil or equivalent to 3 or 4 teeth of ring gear drive side.

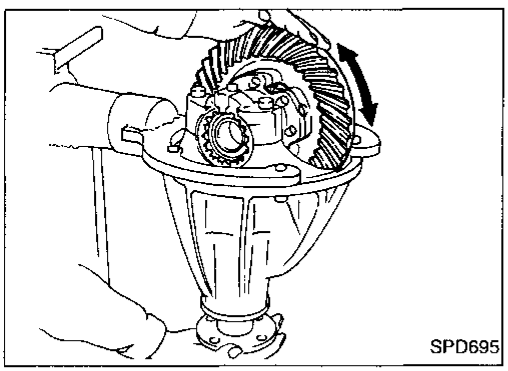
SPD695

3. Hold companion flange steady and rotate the ring gear in both directions.

Usually the pattern will be correct if you have calculated the shims correctly and the backlash is correct.
However, in rare cases you may have to use trial-and-error processes until you get a good tooth contact pattern.
The tooth pattern is the best indication of how well a differential has been set up.

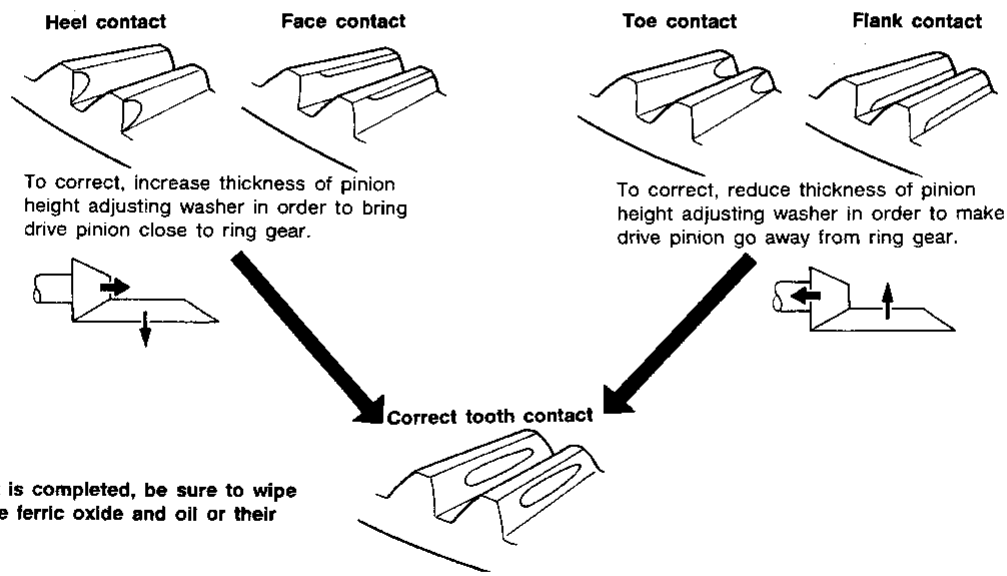

When adjustment is completed, be sure to wipe off completely the ferric oxide and oil or their equivalent.

SPD007

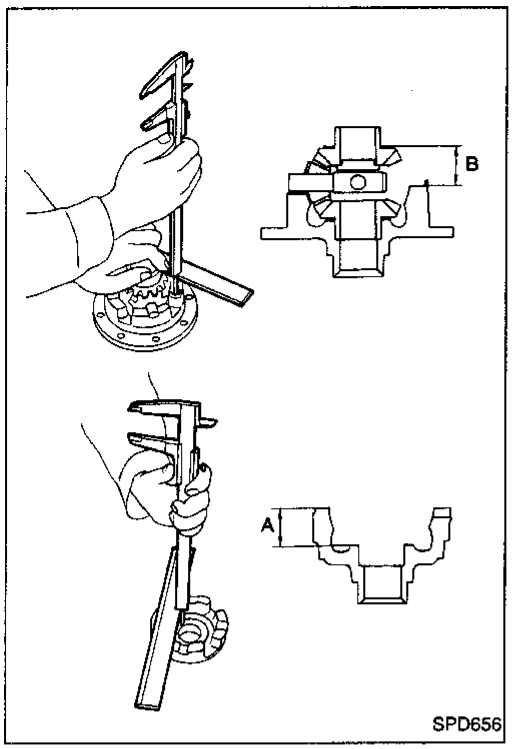

Differential Case

1. Measure clearance between side gear thrust washer and differential case.
   Clearance between side gear thrust washer and differential case (A — B):
   Less than 0.15 mm (0.0059 in)
   The clearance can be adjusted with side gear thrust washer. Refer to SDS, PD-106.
2. Apply gear oil to gear tooth surfaces and thrust surfaces and check to see they turn properly.

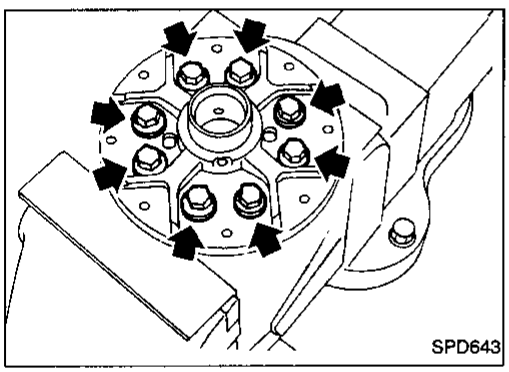

3. Install differential case LH and RH.
4. Install differential case on ring gear.

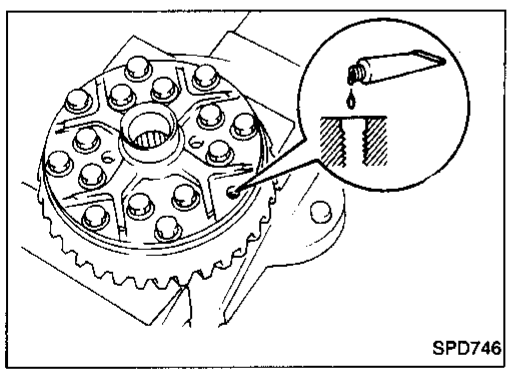

5. Place differential case on ring gear.
6. Apply locking agent [Locktite (stud lock) or equivalent] to ring gear bolts, and install them.

Tighten bolts in a criss-cross fashion, lightly tapping bolt head with a hammer.

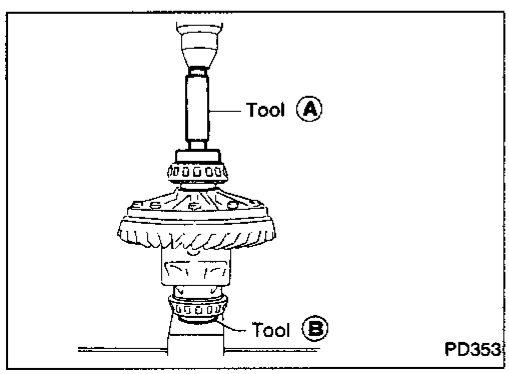

7. Press-fit side bearing inner cones on differential case with Tool.
   Tool numbers:
   Ⓐ ST33190000 (J25523)
   Ⓑ ST33081000 (—)

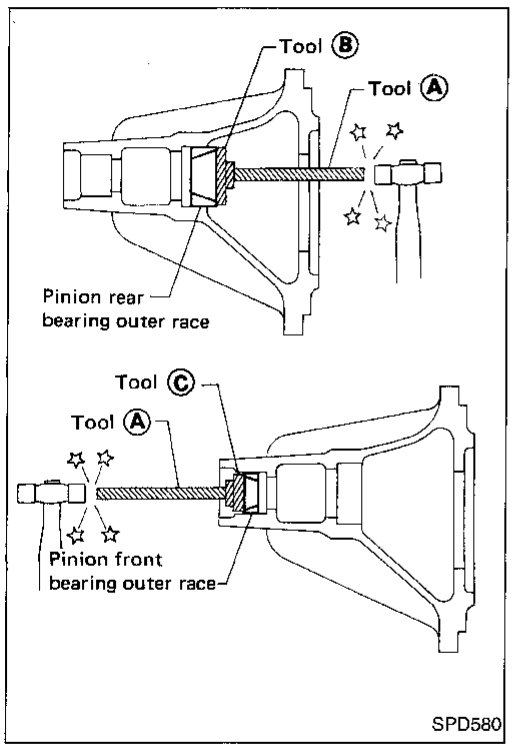

Differential Carrier

1. Press-fit front and rear bearing outer races with Tools.
   Tool numbers:
   Ⓐ ST30611000 (J25742-1)
   Ⓑ ST30621000 (J25742-5)
   Ⓒ ST30613000 (J25742-3)

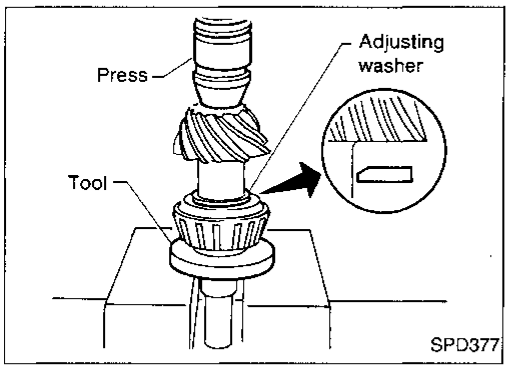

2. Select drive pinion adjusting washer. Refer to "ADJUSTMENT", PD-92.
3. Install drive pinion adjusting washer in drive pinion, and press-fit pinion rear bearing inner cone in it, with press and Tool.
   Tool number: ST30901000 (J26010-01)

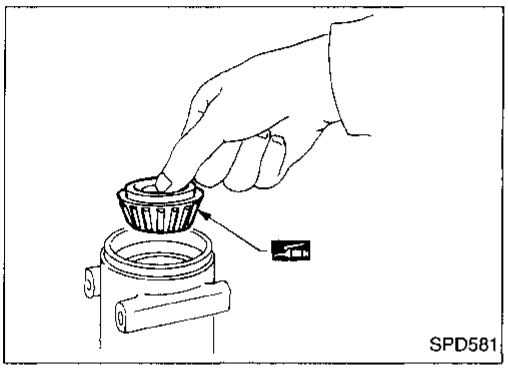

4. Place pinion front bearing inner cone in gear carrier.

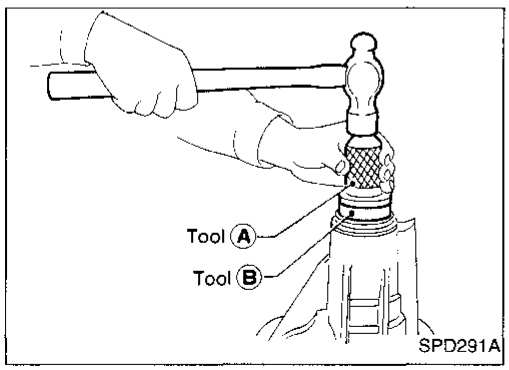

5. Apply multi-purpose grease to cavity at sealing lips of oil seal. Install front oil seal.
   Tool numbers:
   Ⓐ ST30720000 (J25405)
   Ⓑ KV38102510 (—)

Differential Carrier (Cont'd)

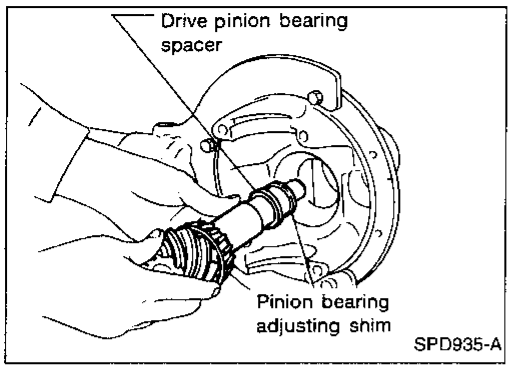

6. Install drive pinion bearing spacer, pinion bearing adjusting shim and drive pinion in gear carrier.

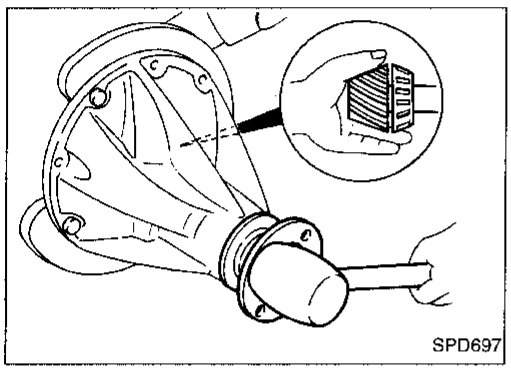

7. Insert companion flange into drive pinion by tapping the companion flange with a soft hammer.

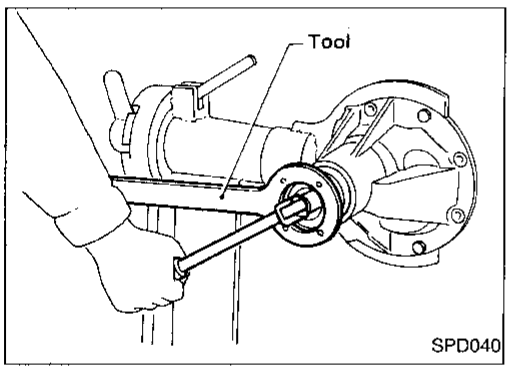

8. Tighten pinion nut to the specified torque.

The threaded portion of drive pinion and pinion nut should be free from oil or grease.

Tool number: KV38104700 (J34311)

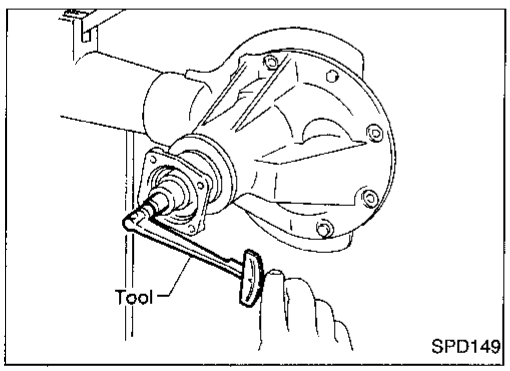

9. Turn drive pinion in both directions several times, and measure pinion bearing preload.

Tool number: ST3127S000 (J25765-A)

Pinion bearing preload (Without front oil seal):

1.2 - 1.5 N·m (12 - 15 kg-cm, 10 - 13 in-lb)

If preload is out of specification, adjust the thickness of spacer and shim combination by replacing shim and spacer with thinner one.

- Start from the combination of thickest spacer and shim.
- Combine each spacer and shim thickness one by one until the correct specification is achieved.

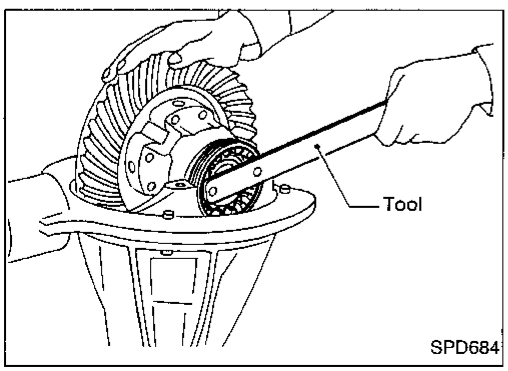

10. Install differential case assembly with side bearing outer races into gear carrier.
11. Position side bearing adjusters on gear carrier with threads properly engaged; screw in adjusters lightly at this stage of assembly.

Tool number: ST32580000 (J34312)

Differential Carrier (Cont'd)

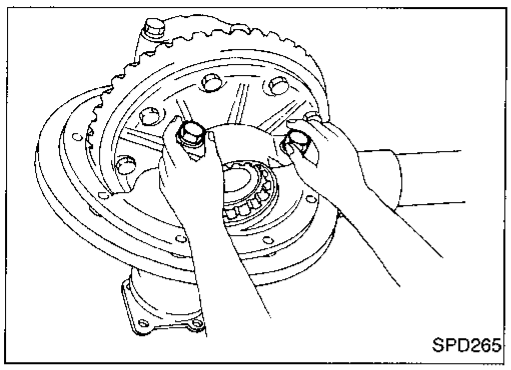

12. Align mark on bearing cap with that on gear carrier and install bearing cap on gear carrier.
- Do not tighten at this point to allow further tightening of side bearing adjusters.

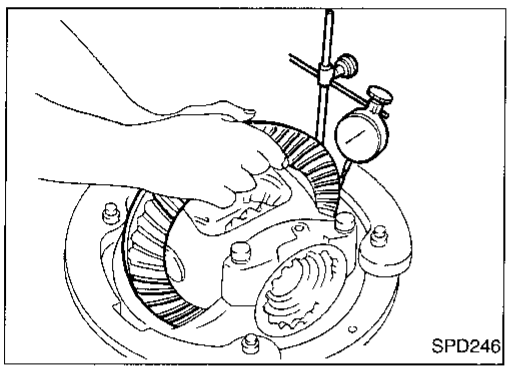

13. Tighten both right and left side bearing adjusters alternately and measure ring gear backlash and total preload at the same time. Adjust right and left side bearing adjusters by tightening them alternately so that proper ring gear backlash and total preload can be obtained.
    Ring gear-to-drive pinion backlash:
    0.15 - 0.20 mm (0.0059 - 0.0079 in)

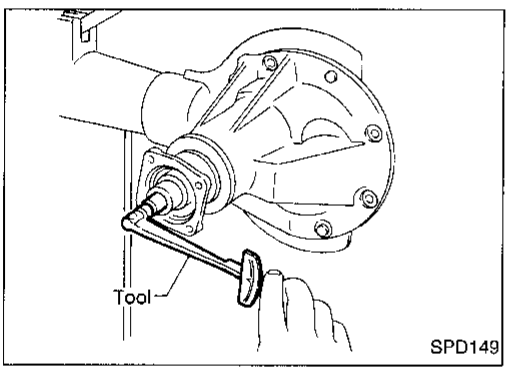

- **When checking preload, turn drive pinion in both directions several times to set bearing rollers.**
  Tool number: ST3127S000 (J25765-A)
  Total preload:
  1.7 - 2.5 N·m (17 - 25 kg-cm, 15 - 22 in-lb)

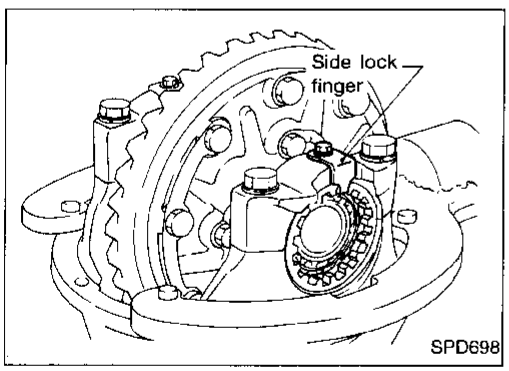

14. Tighten side bearing cap bolts.
15. Install side lock finger in place to prevent rotation during operation.

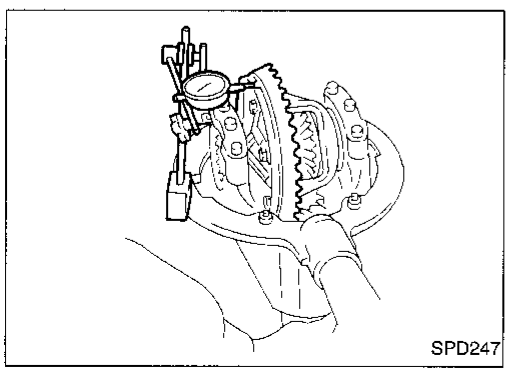

16. Check runout of ring gear with a dial indicator.
    Runout limit: 0.08 mm (0.0031 in)
- If backlash varies excessively in different places, the variance may have resulted from foreign matter caught between the ring gear and the differential case.
- If the backlash varies greatly when the runout of the ring gear is within a specified range, the hypoid gear set or differential case should be replaced.

17. Check tooth contact. Refer to "ADJUSTMENT", PD-95.

Propeller Shaft

GENERAL SPECIFICATIONS

2WD models

Wheelbase		Standard		Long	
Transmission		M/T	A/T	M/T	A/T
Propeller shaft model		3S71A			
Number of joints		3			
Coupling method with transmission		Sleeve type			
Type of journal bearings		Solid type (disassembly type)			
Distance between yokes mm (in)		88.1 (3.47)			
Shaft length (Spider to spider) mm (in)	1st	651.5 (25.65)	549.9 (21.65)	651.5 (25.65)	549.9 (21.65)
	2nd	675.2 (26.58)		975.2 (38.39)	
Shaft outer diameter mm (in)	1st	63.5 (2.50)			
	2nd	63.5 (2.50)			

4WD models

Location		Front	Rear	
Wheelbase		—	Standard	Long
Propeller shaft model		2F71H	2S80B	3S80B
Number of joints		2		3
Coupling method with transmission		Flange type	Sleeve type	
Type of journal bearings		Solid type (disassembly type)		
Distance between yokes mm (in)		88.1 (3.47)		
Shaft length (Spider to spider) mm (in)	1st	514.1 (20.24)	938.1 (36.93)	398.0 (15.67)
	2nd	—		840.3 (33.08)
Shaft outer diameter mm (in)	1st	63.5 (2.50)	63.5 (2.50)	63.5 (2.50)
	2nd	—		63.5 (2.50)

Propeller Shaft (Cont'd)

SERVICE DATA

Unit: mm (in)

Propeller shaft runout limit	0.6 (0.024)
Journal axial play	0.02 (0.0008) or less

Snap ring

Unit: mm (in)

Thickness	Color	Part number
1.99 (0.0783)	White	37146-C9400
2.02 (0.0795)	Yellow	37147-C9400
2.05 (0.0807)	Red	37148-C9400
2.08 (0.0819)	Green	37149-C9400
2.11 (0.0831)	Blue	37150-C9400
2.14 (0.0843)	Light brown	37151-C9400
2.17 (0.0854)	Black	37152-C9400
2.20 (0.0866)	No paint	37153-C9400

Final Drive

GENERAL SPECIFICATIONS

2WD models

Transmission	M/T						A/T	
Body type	Regular/King cab		King cab		King cab		Regular/King cab	
Vehicle type	Except SE		SE		XE*		SE/XE	
Final drive model	Standard	Optional	Standard	Optional	Standard	Optional	Standard	Optional
	H190A		C200				H190A	
	2-pinion	LSD	2-pinion	LSD	2-pinion	LSD	2-pinion	LSD
Gear ratio	3.545		3.900				4.111	
Number of teeth (Ring gear/drive pinion)	39/11		39/10				37/9	
Oil capacity (Approx.) ℓ (US pt, Imp pt)	1.5 (3-1/8, 2-5/8)		1.3 (2-3/4, 2-1/4)				1.5 (3-1/8, 2-5/8)	

*: Option

4WD models

Front final drive	R180A	
	4-pinion	
Gear ratio	4.625	
Oil capacity (Approx.) ℓ (US pt, Imp pt)	1.3 (2-3/4, 2-1/4)	
Rear final drive	Standard	Optional
	H233B	
	4-pinion	LSD
Gear ratio	4.625	
Number of teeth (Ring gear/drive pinion)	37/8	
Oil capacity (Approx.) ℓ (US pt, Imp pt)	2.8 (5-7/8, 4-7/8)	

INSPECTION AND ADJUSTMENT (R180A)

Ring gear runout

Ring gear runout limit mm (in)	0.05 (0.0020)

Axle bearing adjustment

Axle bearing end play mm (in)	0 - 0.1 (0 - 0.004)

Available axle bearing adjusting shims

Thickness mm (in)	Part number
0.10 (0.0039)	38233-01G11
0.20 (0.0079)	38233-01G12
0.30 (0.0118)	38233-01G13
0.40 (0.0157)	38233-01G14
0.50 (0.0197)	38233-01G10

Side gear adjustment

Side gear backlash (Clearance between side gear and differential case) mm (in)	Less than 0.15 (0.0059)

Available side gear thrust washers

Thickness mm (in)	Part number
0.75 - 0.78 (0.0295 - 0.0307)	38424-W2010
0.78 - 0.81 (0.0307 - 0.0319)	38424-W2011
0.81 - 0.84 (0.0319 - 0.0331)	38424-W2012
0.84 - 0.87 (0.0331 - 0.0343)	38424-W2013
0.87 - 0.90 (0.0343 - 0.0354)	38424-W2014
0.90 - 0.93 (0.0354 - 0.0366)	38424-W2015
0.93 - 0.96 (0.0366 - 0.0378)	38424-W2016
0.96 - 0.99 (0.0378 - 0.0390)	38424-W2017

Side bearing adjustment

Differential carrier assembly turning resistance N (kg, lb)	34.3 - 39.2 (3.5 - 4.0, 7.7 - 8.8)
Side bearing adjusting method	Adjusting shim

Available side retainer shims

Thickness mm (in)	Part number
0.20 (0.0079)	38453-01G00
0.25 (0.0098)	38453-01G01
0.30 (0.0118)	38453-01G02
0.40 (0.0157)	38453-01G03
0.50 (0.0197)	38453-01G04

Total preload adjustment

Total preload N·m (kg-cm, in-lb)	1.2 - 2.3 (12 - 23, 10 - 20)
Ring gear backlash mm (in)	0.13 - 0.18 (0.0051 - 0.0071)

Drive pinion height adjustment

Available pinion height adjusting washers

Thickness mm (in)	Part number
3.09 (0.1217)	38154-P6017
3.12 (0.1228)	38154-P6018
3.15 (0.1240)	38154-P6019
3.18 (0.1252)	38154-P6020
3.21 (0.1264)	38154-P6021
3.24 (0.1276)	38154-P6022
3.27 (0.1287)	38154-P6023
3.30 (0.1299)	38154-P6024
3.33 (0.1311)	38154-P6025
3.36 (0.1323)	38154-P6026
3.39 (0.1335)	38154-P6027
3.42 (0.1346)	38154-P6028
3.45 (0.1358)	38154-P6029
3.48 (0.1370)	38154-P6030
3.51 (0.1382)	38154-P6031
3.54 (0.1394)	38154-P6032
3.57 (0.1406)	38154-P6033
3.60 (0.1417)	38154-P6034
3.63 (0.1429)	38154-P6035
3.66 (0.1441)	38154-P6036

Drive pinion preload adjustment

Drive pinion bearing preload adjusting method	Adjusting washer and spacer
Drive pinion preload N·m (kg-cm, in-lb)	
With front oil seal	1.1 - 1.7 (11 - 17, 9.5 - 14.8)

Available drive pinion bearing preload adjusting washers

Thickness mm (in)	Part number
6.59 (0.2594)	38127-01G00
6.57 (0.2587)	38127-01G01
6.55 (0.2579)	38127-01G02
6.53 (0.2571)	38127-01G03
6.51 (0.2563)	38127-01G04
6.49 (0.2555)	38127-01G05
6.47 (0.2547)	38127-01G06
6.45 (0.2539)	38127-01G07
6.43 (0.2531)	38127-01G08
6.41 (0.2524)	38127-01G09
6.39 (0.2516)	38127-01G10
6.37 (0.2508)	38127-01G11
6.35 (0.2500)	38127-01G12
6.33 (0.2492)	38127-01G13
6.31 (0.2484)	38127-01G14

Available drive pinion bearing preload adjusting spacers

Length mm (in)	Part number
52.20 (2.0551)	38130-78500
52.40 (2.0630)	38131-78500
52.60 (2.0709)	38132-78500
52.80 (2.0787)	38133-78500
53.00 (2.0866)	38134-78500
53.20 (2.0945)	38135-78500

INSPECTION AND ADJUSTMENT (H190A)

Ring gear runout

Ring gear runout limit mm (in)	0.08 (0.0031)

Side gear adjustment

Side gear backlash (Clearance between side gear to differential case) mm (in)	Less than 0.15 (0.0059)

Available side gear thrust washers

Conventional models

Thickness mm (in)	Part number
0.75 (0.0295)	38424-E3000
0.80 (0.0315)	38424-E3001
0.85 (0.0335)	38424-E3002
0.90 (0.0354)	38424-E3003

LSD models

Thickness mm (in)	ID color	Part number
1.50 (0.0591)	None	38424-41W00
1.60 (0.0630)	White	38424-41W01
1.70 (0.0669)	Yellow	38424-41W02

— Additional service for LSD model —

Differential torque adjustment

Differential torque N·m (kg-m, ft-lb)	
New parts	69 - 118 (7 - 12, 51 - 87)
Used parts	39 - 74 (4 - 7.5, 29 - 54)
Number of discs and plates	
Friction disc	4
Friction plate	4
Spring disc	2
Spring plate	2
Wear limit of plate and disc mm (in)	0.1 (0.004)
Allowable warpage mm (in)	
Friction disc and plate	0.08 (0.0031)

Available discs and plates

Part name	Thickness mm (in)	Part number
Friction disc	1.75 (0.0689)	38433-41W00
	1.85 (0.0728)	38433-41W01
Friction plate	1.75 (0.0689)	38432-41W00
Spring disc	1.75 (0.0689)	38436-N3210
Spring plate	1.75 (0.0689)	38435-N3210

Drive pinion height adjustment

Available drive pinion height adjusting washers

Thickness mm (in)	Part number
2.58 (0.1016)	38154-P6000
2.61 (0.1028)	38154-P6001
2.64 (0.1039)	38154-P6002
2.67 (0.1051)	38154-P6003
2.70 (0.1063)	38154-P6004
2.73 (0.1075)	38154-P6005
2.76 (0.1087)	38154-P6006
2.79 (0.1098)	38154-P6007
2.82 (0.1110)	38154-P6008
2.85 (0.1122)	38154-P6009
2.88 (0.1134)	38154-P6010
2.91 (0.1146)	38154-P6011
2.94 (0.1157)	38154-P6012
2.97 (0.1169)	38154-P6013
3.00 (0.1181)	38154-P6014
3.03 (0.1193)	38154-P6015
3.06 (0.1205)	38154-P6016
3.09 (0.1217)	38154-P6017
3.12 (0.1228)	38154-P6018
3.15 (0.1240)	38154-P6019
3.18 (0.1252)	38154-P6020

Drive pinion preload adjustment

Drive pinion bearing preload adjusting method	Collapsible spacer
Drive pinion preload N·m (kg-cm, in-lb)	
With front oil seal	1.1 - 1.6 (11 - 16, 9.5 - 13.9)

Side bearing adjustment

Differential carrier assembly turning resistance N (kg, lb)	34.3 - 39.2 (3.5 - 4.0, 7.7 - 8.8)
Side bearing adjusting method	Adjusting shim

Available side bearing adjusting shims

Thickness mm (in)	Part number
0.10 (0.0039)	38455-61200
0.12 (0.0047)	38453-61201
0.15 (0.0059)	38453-61202
0.17 (0.0067)	38453-61203
0.20 (0.0079)	38456-61200
0.25 (0.0098)	38453-61204
0.30 (0.0118)	38453-61205
0.40 (0.0157)	38453-61206
0.50 (0.0197)	38457-61200

Total preload adjustment

Total preload N·m (kg-cm, in-lb)	1.2 - 2.2 (12 - 22, 10 - 19)
Ring gear backlash mm (in)	0.13 - 0.18 (0.0051 - 0.0071)

INSPECTION AND ADJUSTMENT (C200)

Ring gear runout

Ring gear runout limit mm (in)	0.05 (0.0020)

Side gear adjustment

Side gear backlash (Clearance between side gear and differential case) mm (in)	Less than 0.15 (0.0059)

Available side gear thrust washers

Thickness mm (in)	Part number
0.75 (0.0295)	38424-N3110
0.78 (0.0307)	38424-N3111
0.81 (0.0319)	38424-N3112
0.84 (0.0331)	38424-N3113
0.87 (0.0343)	38424-N3114
0.90 (0.0354)	38424-N3115
0.93 (0.0366)	38424-N3116

Side bearing adjustment

Differential carrier assembly turning resistance N (kg, lb)	34.3 - 39.2 (3.5 - 4.0, 7.7 - 8.8)

Available side bearing adjusting washers

Thickness mm (in)	Part number
2.00 (0.0787)	38453-N3100
2.05 (0.0807)	38453-N3101
2.10 (0.0827)	38453-N3102
2.15 (0.0846)	38453-N3103
2.20 (0.0866)	38453-N3104
2.25 (0.0886)	38453-N3105
2.30 (0.0906)	38453-N3106
2.35 (0.0925)	38453-N3107
2.40 (0.0945)	38453-N3108
2.45 (0.0965)	38453-N3109
2.50 (0.0984)	38453-N3110
2.55 (0.1004)	38453-N3111
2.60 (0.1024)	38453-N3112

Drive pinion height adjustment

Available pinion height adjusting washers

Thickness mm (in)	Part number
3.09 (0.1217)	38154-P6017
3.12 (0.1228)	38154-P6018
3.15 (0.1240)	38154-P6019
3.18 (0.1252)	38154-P6020
3.21 (0.1264)	38154-P6021
3.24 (0.1276)	38154-P6022
3.27 (0.1287)	38154-P6023
3.30 (0.1299)	38154-P6024
3.33 (0.1311)	38154-P6025
3.36 (0.1323)	38154-P6026
3.39 (0.1335)	38154-P6027
3.42 (0.1346)	38154-P6028
3.45 (0.1358)	38154-P6029
3.48 (0.1370)	38154-P6030
3.51 (0.1382)	38154-P6031
3.54 (0.1394)	38154-P6032
3.57 (0.1406)	38154-P6033
3.60 (0.1417)	38154-P6034
3.63 (0.1429)	38154-P6035
3.66 (0.1441)	38154-P6036

Total preload adjustment

Total preload N·m (kg-cm, in-lb)	1.2 - 2.3 (12 - 23, 10 - 20)
Ring gear backlash mm (in)	0.13 - 0.18 (0.0051 - 0.0071)

— Additional service for LSD model — (C200)

Differential torque adjustment

Differential torque N·m (kg-m, ft-lb)	88 - 108 (9.0 - 11.0, 65 - 80)
Number of discs and plates	
Friction disc	12
Friction plate	12
Spring plate	2
Wear limit of plate and disc mm (in)	0.1 (0.004)
Allowable warpage of friction disc and plate mm (in)	0.08 (0.0031)

Available discs and plates

Part name	Thickness mm (in)	Part number
Friction disc	1.5 (0.059)	38433-C6002 (Standard type)
	1.6 (0.063)	38433-C6003 (Adjusting type)
Friction plate	1.5 (0.059)	38432-C6001
Spring plate	1.5 (0.059)	38435-C6011

Final Drive (Cont'd)

INSPECTION AND ADJUSTMENT (H233B)

Ring gear runout

Ring gear runout limit mm (in)	0.08 (0.0031)

Side gear adjustment

Side gear backlash (Clearance between side gear to differential case) mm (in)	Less than 0.15 (0.0059)

Available side gear thrust washers

Thickness mm (in)	Part number
1.75 (0.0689)	38424-T5000
1.80 (0.0709)	38424-T5001
1.85 (0.0728)	38424-T5002

— Additional service for LSD model —

Differential torque adjustment

Differential torque N·m (kg-m, ft-lb)	201 - 240 (20.5 - 24.5, 148 - 177)
Number of discs and plates	
Friction disc	10
Friction plate	12
Spring disc	2
Spring plate	2
Wear limit of plate and disc mm (in)	0.1 (0.004)
Allowable warpage of friction disc and plate mm (in)	0.08 (0.0031)

Available discs and plates

Part name	Thickness mm (in)	Part number
Friction disc	1.48 - 1.52 (0.0583 - 0.0598)	38433-C6000 (Standard type)
	1.58 - 1.62 (0.0622 - 0.0638)	38433-C6001 (Adjusting type)
Friction plate	1.48 - 1.52 (0.0583 - 0.0598)	38432-C6000
Spring disc	1.48 - 1.52 (0.0583 - 0.0598)	38436-C6000
Spring plate	1.48 - 1.52 (0.0583 - 0.0598)	38435-C6010

Drive pinion height adjustment

Available pinion height adjusting washers

Thickness mm (in)	Part number
2.58 (0.1016)	38151-01J00
2.61 (0.1028)	38151-01J01
2.64 (0.1039)	38151-01J02
2.67 (0.1051)	38151-01J03
2.70 (0.1063)	38151-01J04
2.73 (0.1075)	38151-01J05
2.76 (0.1087)	38151-01J06
2.79 (0.1098)	38151-01J07
2.82 (0.1110)	38151-01J08
2.85 (0.1122)	38151-01J09
2.88 (0.1134)	38151-01J10
2.91 (0.1146)	38151-01J11
2.94 (0.1157)	38151-01J12
2.97 (0.1169)	38151-01J13
3.00 (0.1181)	38151-01J14
3.03 (0.1193)	38151-01J15
3.06 (0.1205)	38151-01J16
3.09 (0.1217)	38151-01J17
3.12 (0.1228)	38151-01J18
3.15 (0.1240)	38151-01J19
3.18 (0.1252)	38151-01J60
3.21 (0.1264)	38151-01J61
3.24 (0.1276)	38151-01J62
3.27 (0.1287)	38151-01J63
3.30 (0.1299)	38151-01J64
3.33 (0.1311)	38151-01J65
3.36 (0.1323)	38151-01J66
3.39 (0.1335)	38151-01J67
3.42 (0.1346)	38151-01J68
3.45 (0.1358)	38151-01J69
3.48 (0.1370)	38151-01J70
3.51 (0.1382)	38151-01J71
3.54 (0.1394)	38151-01J72
3.57 (0.1406)	38151-01J73
3.60 (0.1417)	38151-01J74
3.63 (0.1429)	38151-01J75
3.66 (0.1441)	38151-01J76

Final Drive (Cont'd)

Drive pinion preload adjustment

Drive pinion bearing preload adjusting method	Adjusting shim and spacer
Drive pinion preload N·m (kg-cm, in-lb)	
Without front oil seal	1.2 - 1.5 (12 - 15, 10 - 13)

Available drive pinion preload adjusting shims

Thickness mm (in)	Part number
2.31 (0.0909)	38125-82100
2.33 (0.0917)	38126-82100
2.35 (0.0925)	38127-82100
2.37 (0.0933)	38128-82100
2.39 (0.0941)	38129-82100
2.41 (0.0949)	38130-82100
2.43 (0.0957)	38131-82100
2.45 (0.0965)	38132-82100
2.47 (0.0972)	38133-82100
2.49 (0.0980)	38134-82100
2.51 (0.0988)	38135-82100
2.53 (0.0996)	38136-82100
2.55 (0.1004)	38137-82100
2.57 (0.1012)	38138-82100
2.59 (0.1020)	38139-82100

Available drive pinion preload adjusting spacers

Length mm (in)	Part number
4.50 (0.1772)	38165-76000
4.75 (0.1870)	38166-76000
5.00 (0.1969)	38167-76000
5.25 (0.2067)	38166-01J00
5.50 (0.2165)	38166-01J10

Total preload adjustment

Total preload N·m (kg-cm, in-lb)	1.7 - 2.5 (17 - 25, 15 - 22)
Ring gear backlash mm (in)	0.15 - 0.20 (0.0059 - 0.0079)
Side bearing adjusting method	Side adjuster

FRONT AXLE & FRONT SUSPENSION

SECTION FA

CONTENTS

PRECAUTIONS AND PREPARATION 2
Precautions 2
Special Service Tools 2
Commercial Service Tools 2
FRONT AXLE AND FRONT SUSPENSION 3
ON-VEHICLE SERVICE 5
Front Axle and Front Suspension Parts 5
Front Wheel Bearing 6
Preload Adjustment (2WD) 6
Preload Adjustment (4WD) 7
Front Wheel Alignment 8
Preliminary Inspection 8
Camber, Caster And Kingpin Inclination 9
Adjustment 9
Toe-In 12
Front Wheel Turning Angle 13
Drive Shaft 14
FRONT AXLE 15
FRONT AXLE (4WD) 17
Manual-lock Free-running Hub 17
Auto-lock Free-running Hub 18
FRONT AXLE 24
Wheel Hub and Rotor Disc 24
Knuckle Spindle 25
FRONT AXLE (4WD) 28
Drive Shaft 28
FRONT SUSPENSION 34
Shock Absorber 36
Torsion Bar Spring 36
Stabilizer Bar 39
Upper Link 40
Tension Rod or Compression Rod 42
Lower Link 43
Upper Ball Joint and Lower Ball Joint 44
SERVICE DATA AND SPECIFICATIONS (SDS) 45
General Specifications 45
Inspection and Adjustment 46

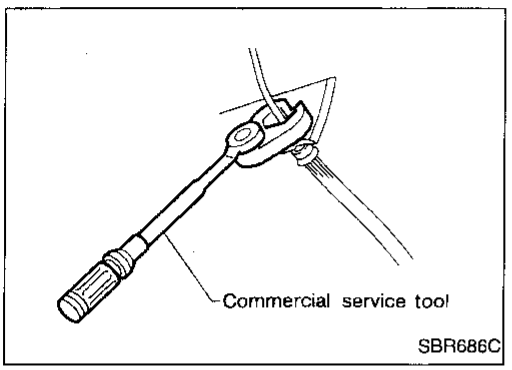

Precautions

- **When installing rubber parts, final tightening must be carried out under unladen condition* with tires on ground.**
  *** Fuel, radiator coolant and engine oil full. Spare tire, jack, hand tools and mats in designated positions.**
- **Use flare nut wrench when removing or installing brake tubes.**
- **After installing removed suspension parts, check wheel alignment and adjust if necessary.**
- **Always torque brake lines when installing.**

Special Service Tools

The actual shapes of Kent-Moore tools may differ from those of special service tools illustrated here.

Tool number (Kent-Moore No.) Tool name	Description		Unit application	
			2WD	4WD
ST29020001 (J24319-01) Gear arm puller	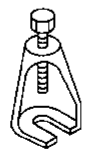 NT143	Removing ball joint for knuckle spindle	X	X
HT72520000 (J25730-B) Ball joint remover	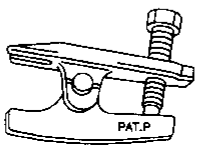 NT146	Removing tie-rod outer end	X	X
KV401021S0 (—) Bearing race drift	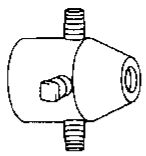 NT153	Installing wheel bearing outer race	X	X
KV40105400 (J36001) Wheel bearing lock nut wrench	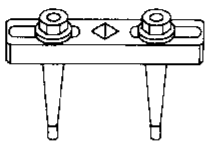 NT154	Removing or installing wheel bearing lock nut	—	X

Commercial Service Tools

Tool name	Description	
① Flare nut crowfoot ② Torque wrench	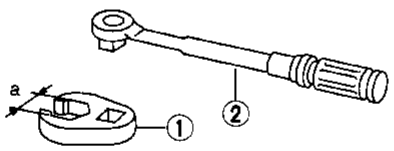 NT360	Removing and installing each brake piping **a: 10 mm (0.39 in)**

2WD

SEC. 400•401•406

When installing rubber parts, final tightening must be carried out under unladen condition* with tires on ground.

*** Fuel, radiator coolant and engine oil full. Spare tire, jack, hand tools and mats in designated positions.**

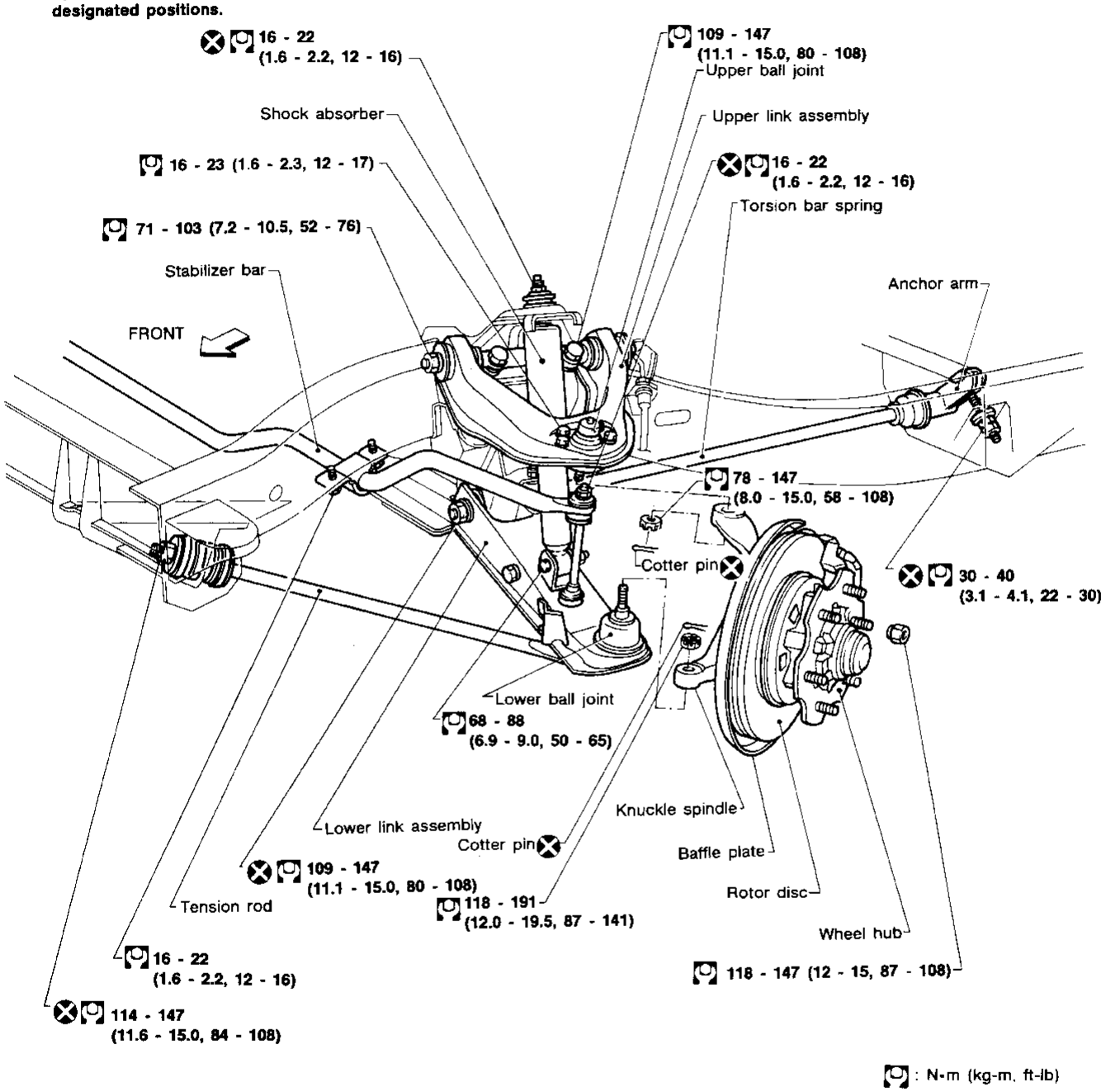

AFA101

4WD

SEC. 390•400•401•406

When installing rubber parts, final tightening must be carried out under unladen condition* with tires on ground.

*** Fuel, radiator coolant and engine oil full. Spare tire, jack, hand tools and mats in designated positions.**

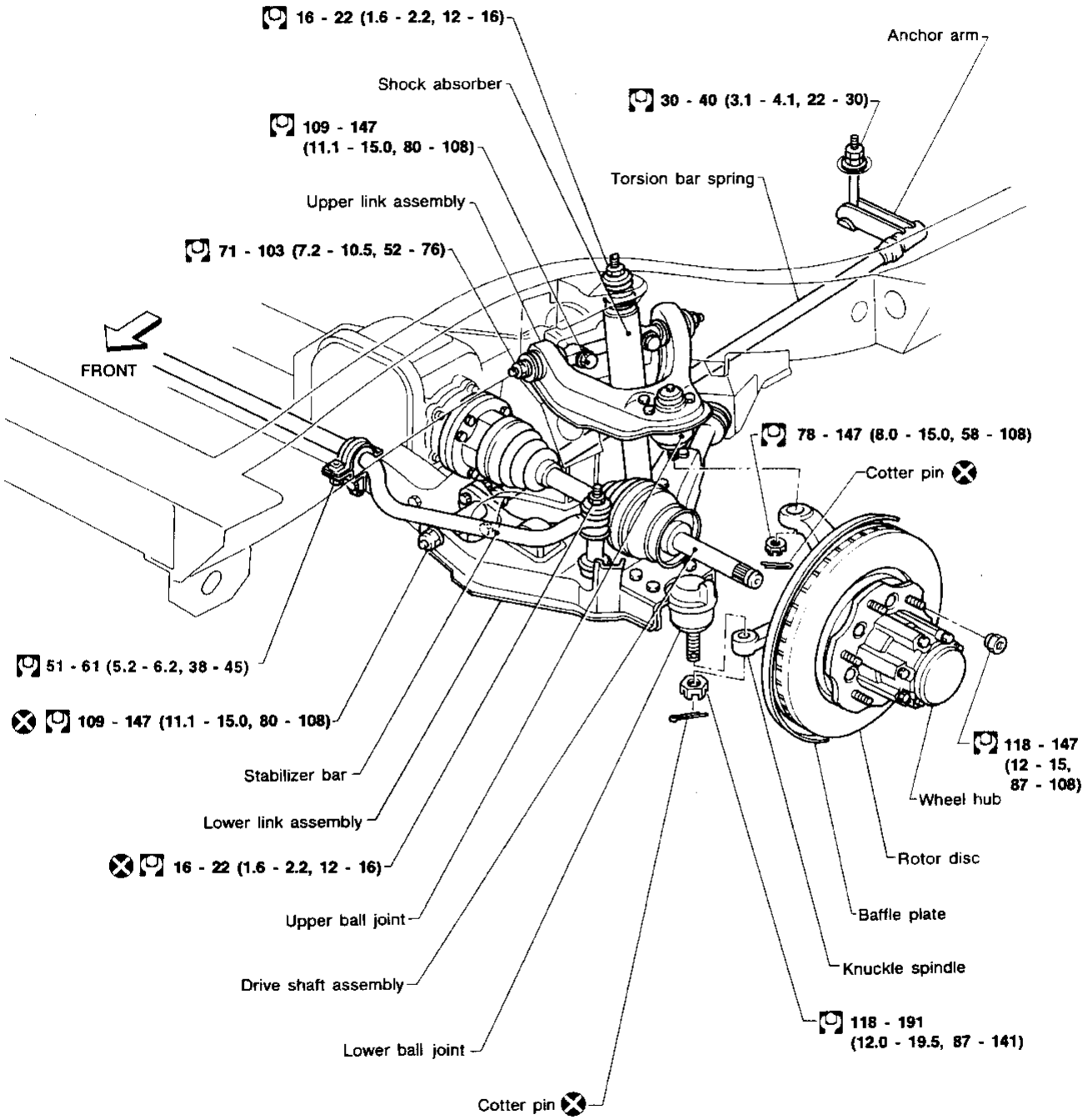

: N•m (kg-m, ft-lb)

AFA097

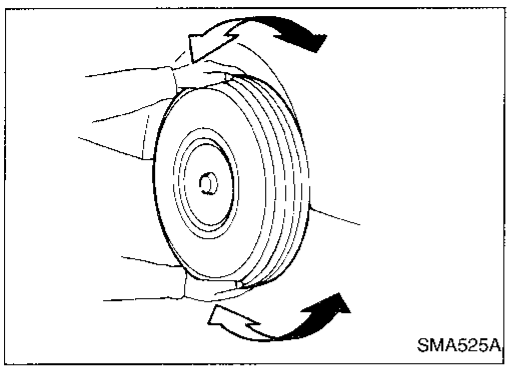

Front Axle and Front Suspension Parts

- Check front axle and front suspension parts for excessive play, cracks, wear or other damage.

a. Shake each front wheel to check for excessive play.

- If looseness is noted, adjust wheel bearing end play, then check ball joint end play.

b. Make sure that the cotter pin is inserted.

c. Retighten all nuts and bolts to the specified torque.
   : Refer to FRONT SUSPENSION, FA-34.

d. Check front axle and front suspension parts for wear, cracks or other damage.

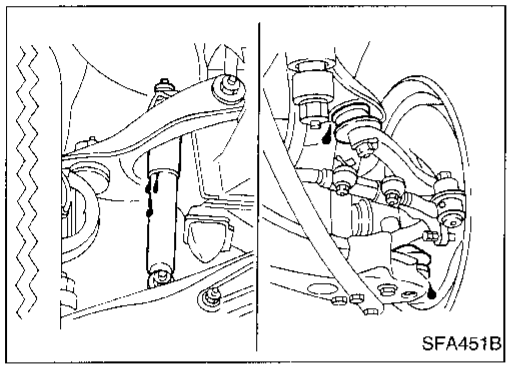

- Check shock absorber for oil leakage and other damage.
- Check suspension ball joint for grease leakage and ball joint dust cover for cracks and other damage.

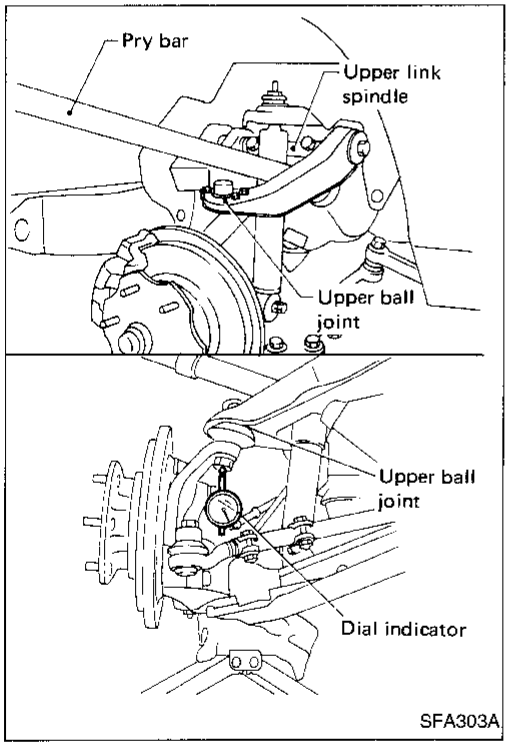

- Check ball joint for vertical end play.
  Upper ball joint:
  0.1 - 1.4 mm (0.004 - 0.055 in) at side frame.

a. Jack up front of vehicle and set the stands.

b. Remove road wheel.

c. Clamp dial indicator onto upper link and place indicator tip on knuckle near upper ball joint.

d. Jack up lower link [Approx. 20 mm (0.79 in).]

e. Place a pry bar between upper link and upper link spindle.

f. While pushing and releasing pry bar, observe maximum dial indicator value.

g. If upper ball joint movement is beyond specifications, remove and recheck it. Refer to "Upper Ball Joint and Lower Ball Joint", "FRONT SUSPENSION", FA-44.

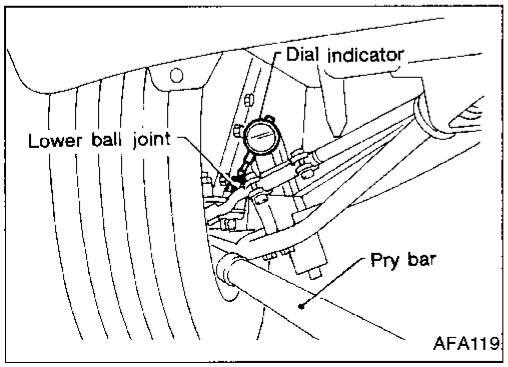

Lower ball joint:
2WD
0.1 - 1.3 mm (0.004 - 0.051 in)
4WD
0.7 mm (0.028 in) or less

a. Jack up front of vehicle and set the stands at side frame.

b. Clamp dial indicator onto transverse link and place indicator tip on lower edge of brake caliper.

c. Make sure front wheels are straight and brake pedal is depressed.

d. Place a pry bar between transverse link and inner rim of road wheel.

e. While pushing and releasing pry bar, observe maximum dial indicator value.

f. If lower ball joint movement is beyond specifications, remove and recheck it. Refer to "Upper Ball Joint and Lower Ball Joint", "FRONT SUSPENSION", FA-44.

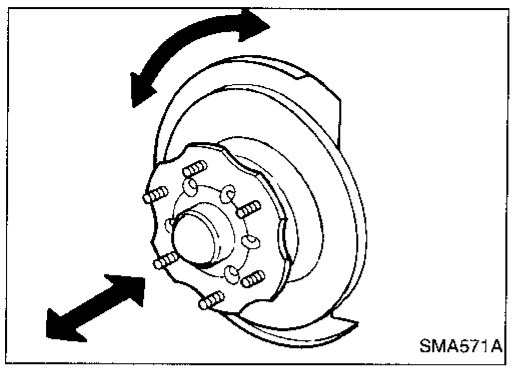

Front Wheel Bearing

- Check that wheel bearings operate smoothly.
- Check axial end play.
  Axial end play: 0 mm (0 in)
- Adjust wheel bearing preload if there is any axial end play or wheel bearing does not turn smoothly.

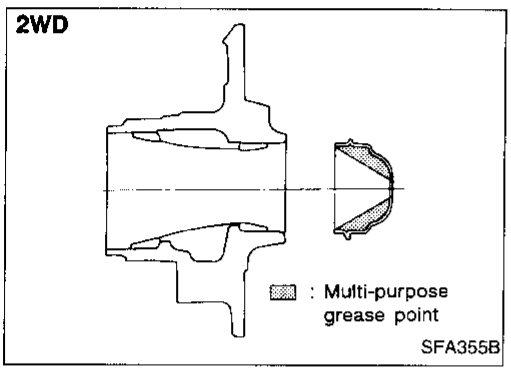

PRELOAD ADJUSTMENT (2WD)

Adjust wheel bearing preload after wheel bearing has been replaced or front axle has been reassembled.

1. Before adjustment, thoroughly clean all parts to prevent dirt entry.
2. Apply multi-purpose grease sparingly to the following parts:
- Rubbing surface of spindle
- Contact surface between lock washer and outer wheel bearing
- Hub cap (as shown at left)
- Grease seal lip

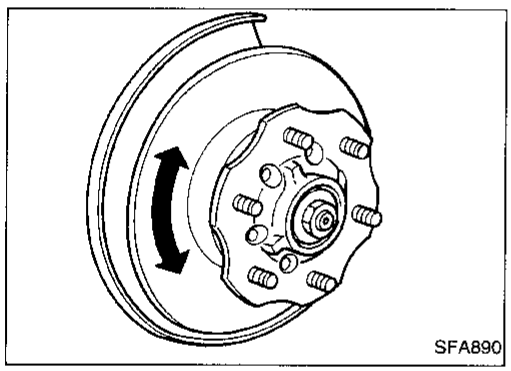

3. Tighten wheel bearing lock nut to the specified torque.
   [O]: 34 - 39 N·m (3.5 - 4.0 kg-m, 25 - 29 ft-lb)
4. Turn wheel hub several times in both directions to seat wheel bearing correctly.
5. Again tighten wheel bearing lock nut to the specified torque.
   [O]: 34 - 39 N·m (3.5 - 4.0 kg-m, 25 - 29 ft-lb)

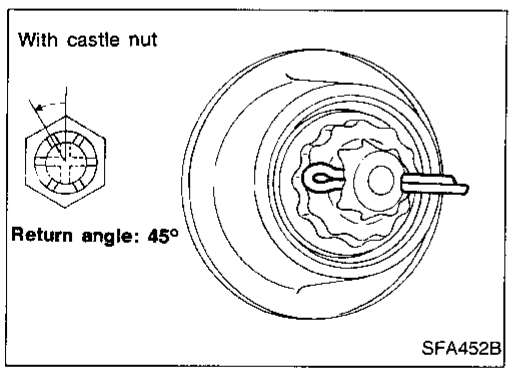

6. Turn wheel bearing lock nut back 45 degrees.
7. Fit adjusting cap and new cotter pin. Align cotter pin slot by loosening nut 15 degrees or less.

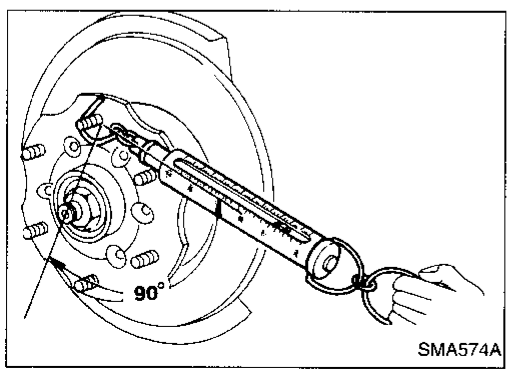

8. Measure wheel bearing preload and axial end play.
   Axial end play: 0 mm (0 in)
   Wheel bearing preload
   (As measured at wheel hub bolt):
   [New grease seal]
   9.8 - 28.4 N (1.0 - 2.9 kg, 2.2 - 6.4 lb)
   [Used grease seal]
   9.8 - 23.5 N (1.0 - 2.4 kg, 2.2 - 5.3 lb)

Repeat above procedures until correct bearing preload is obtained.

Front Wheel Bearing (Cont'd)

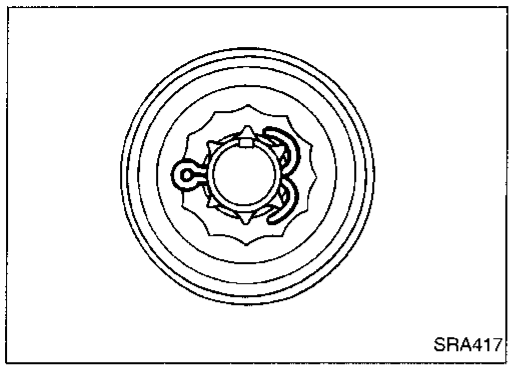
SRA417

9. Spread cotter pin.
10. Install hub cap.

PRELOAD ADJUSTMENT (4WD)

Adjust wheel bearing preload after wheel bearing has been replaced or front axle has been reassembled.

Adjust wheel bearing preload as follows:

1. Before adjustment, thoroughly clean all parts to prevent dirt entry.

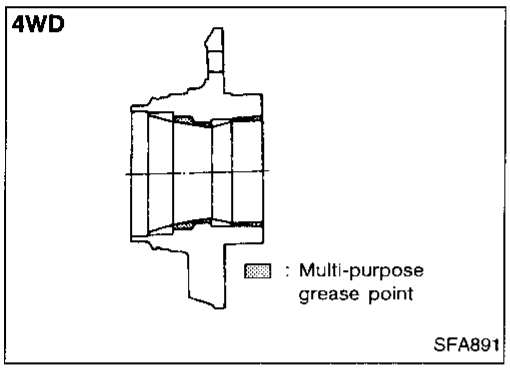

SFA891

2. Apply multi-purpose grease sparingly to the following parts:
- Threaded portion of spindle
- Contact surface between wheel bearing washer and outer wheel bearing
- Grease seal lip
- Wheel hub (as shown at left)

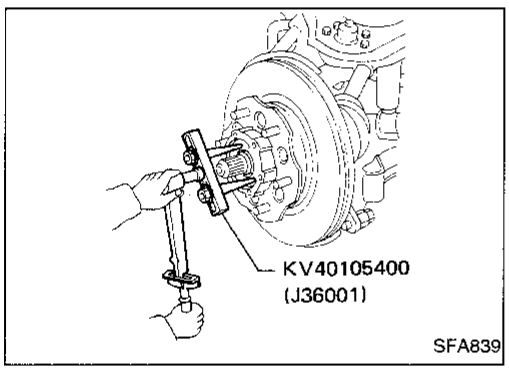

SFA839

3. Tighten wheel bearing lock nut with Tool.
   : 78 - 98 N·m (8 - 10 kg-m, 58 - 72 ft-lb)
4. Turn wheel hub several times in both directions.
5. Loosen wheel bearing lock nut so that torque becomes 0 N·m (0 kg-m, 0 ft-lb).
6. Retighten wheel bearing lock nut with Tool.
   : 0.5 - 1.5 N·m (0.05 - 0.15 kg-m, 4.3 - 13.0 in-lb)

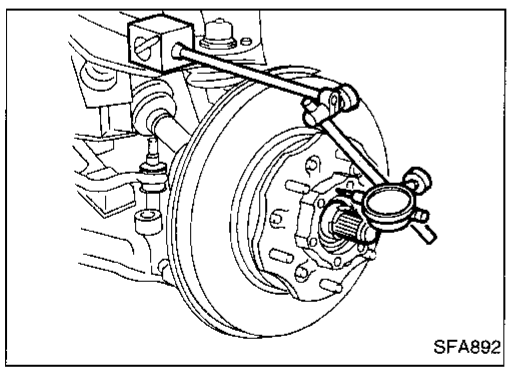
SFA892

7. Turn wheel hub several times in both directions.
8. Retighten wheel bearing lock nut with Tool.
   : 0.5 - 1.5 N·m (0.05 - 0.15 kg-m, 4.3 - 13.0 in-lb)
9. Measure wheel bearing axial end play.
   Axial end play: 0 mm (0 in)

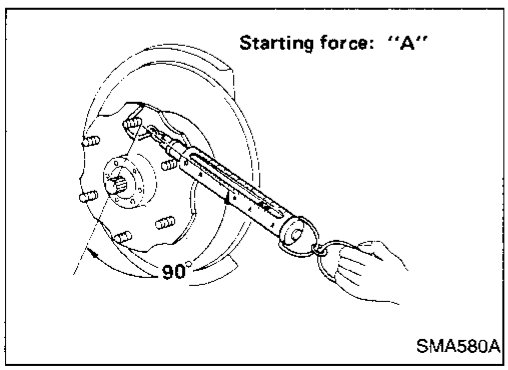

SMA580A

10. Measure starting force "A" at wheel hub bolt.

Front Wheel Bearing (Cont'd)

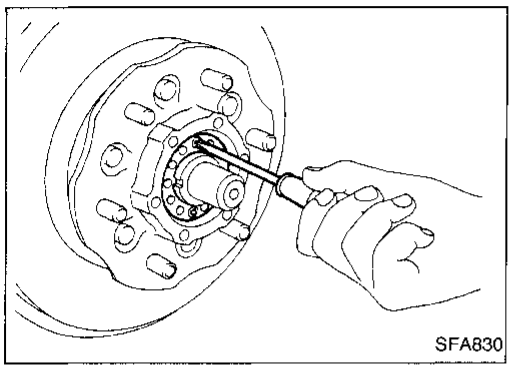

11. Install lock washer by tightening the lock nut within 15 to 30 degrees.
12. Turn wheel hub several times in both directions to seat wheel bearing correctly.
13. Measure starting force "B" at wheel hub bolt. Refer to step 10.
14. Wheel bearing preload "C" can be calculated as shown below.

C = B – A

Wheel bearing preload "C":
7.06 - 20.99 N (0.72 - 2.14 kg, 1.59 - 4.72 lb)

15. Repeat steps 3 through 14 until correct axial end play and wheel bearing preload are obtained.
16. Install free-running hub.

Front Wheel Alignment

Before checking front wheel alignment, make a preliminary inspection (Unladen*).

*: Fuel, radiator coolant and engine oil full. Spare tire, jack, hand tools and mats in designated positions.

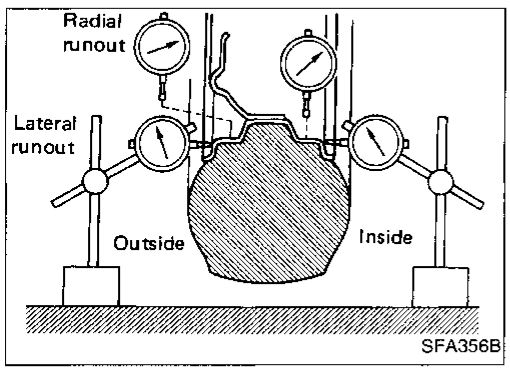

PRELIMINARY INSPECTION

1. Check tires for wear and proper inflation.
2. Check outside and inside wheel runout.
   Wheel runout average
   [(Outside runout value + Inside runout value) x 0.5]:
   Refer to SDS, FA-48.
3. Check front wheel bearings for looseness.
4. Check front suspension for looseness.
5. Check steering linkage for looseness.
6. Check that front shock absorbers work properly by using the standard bounce test.

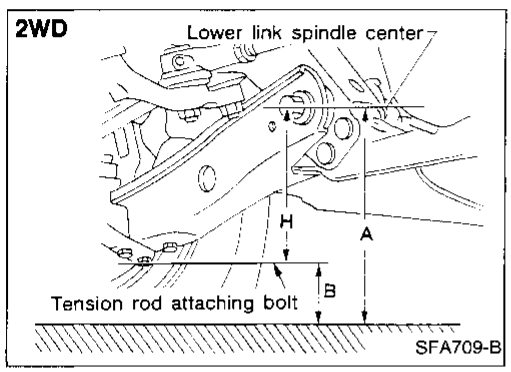

7. Measure vehicle height (Unladen): H = A – B mm (in)
   Refer to SDS, FA-46.

a. Exercise the front suspension by bouncing the front of the vehicle 4 or 5 times to ensure that the vehicle is in a neutral height attitude.
b. Measure wheel alignment.
   Refer to ALLOWABLE LIMIT in SDS, FA-46.
c. If wheel alignment is not as specified, adjust vehicle posture.
   Refer to ADJUSTING RANGE in SDS, FA-46.
d. Adjust wheel alignment.
   Refer to ADJUSTING RANGE in SDS, FA-46.

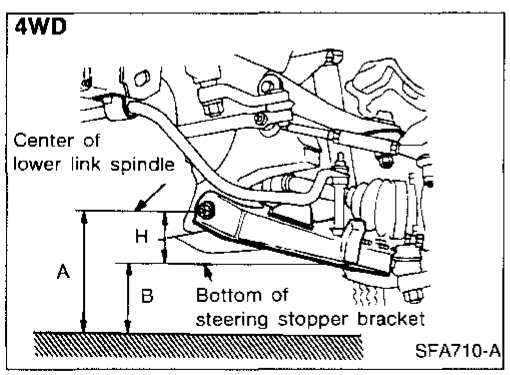

Front Wheel Alignment (Cont'd)

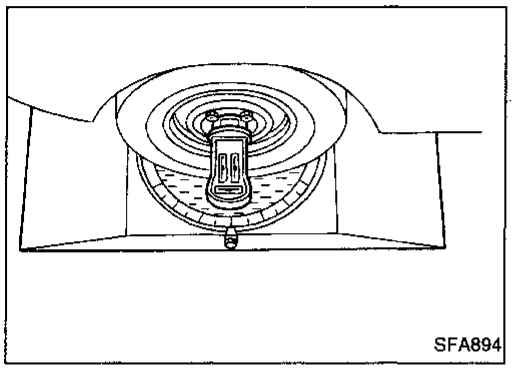
SFA894

CAMBER, CASTER AND KINGPIN INCLINATION

Before checking camber, caster or kingpin inclination, move vehicle up and down on turning radius gauge to minimize friction. Ensure that the vehicle is in correct posture.

- **Measure camber, caster and kingpin inclination of both right and left wheels with a suitable alignment gauge and adjust in accordance with the following procedures.**

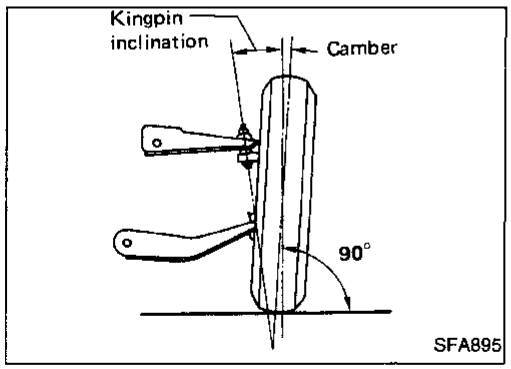

SFA895

Camber (Unladen):
Refer to SDS, FA-46.
Kingpin inclination (Unladen):
Refer to SDS, FA-46.

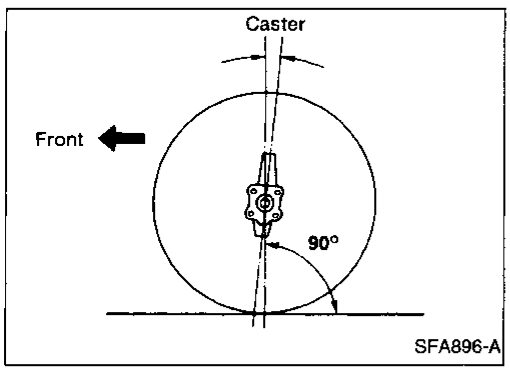

SFA896-A

Caster (Unladen):
Refer to SDS, FA-46.

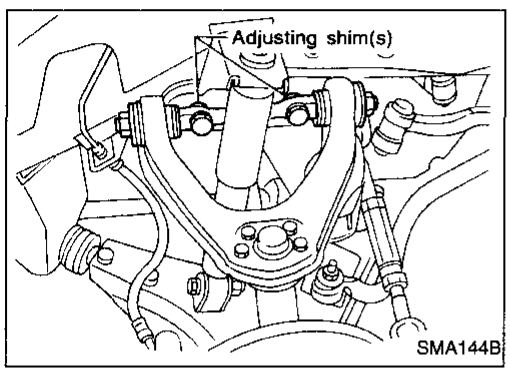

SMA144B

ADJUSTMENT

Both camber and caster angles are adjusted by increasing or decreasing the number of adjusting shims inserted between upper link spindle and frame.

Front Wheel Alignment (Cont'd)

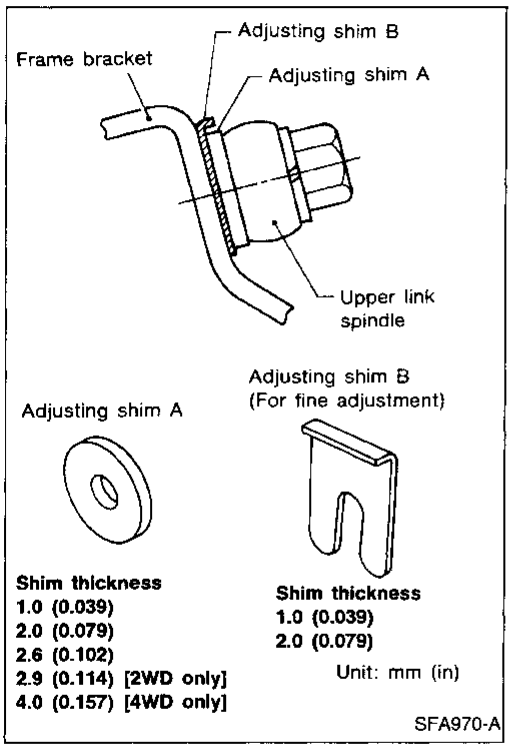

Before removing or installing adjusting shim(s), be sure to place a jack under lower link.

Adjusting shim standard thickness:

2WD

2.9 mm (0.114 in)

4WD

4.0 mm (0.157 in)

- **Do not use four or more shims at one place.**
- **When installing shim B, always face the pawl towards spindle and insert it from bracket side. Use only one shim B in a place.**
- **Total thickness of shims must be within 8.0 mm (0.315 in).**
- **Difference of total thickness of the front and rear must be within 3.0 mm (0.118 in).**
- **Determine thickness and number of shims necessary for adjusting camber and caster, in accordance with the following graph.**

[Example]

a. When service data value minus measured value is equal to:
   Caster angle: –30′
   Camber angle: +30′

b. Obtain the intersecting point of lines in accordance with the graph.

c. Choose shims which are nearest to the intersecting point.

d. For the above example:
   2WD:
   Add 2.0 mm (0.079 in) shim on front side.
   Add 3.0 mm (0.118 in) shim on rear side.
   4WD:
   Add 1.0 mm (0.039 in) shim on front side.
   Add 3.0 mm (0.118 in) shim on rear side.

Front Wheel Alignment (Cont'd)

2WD

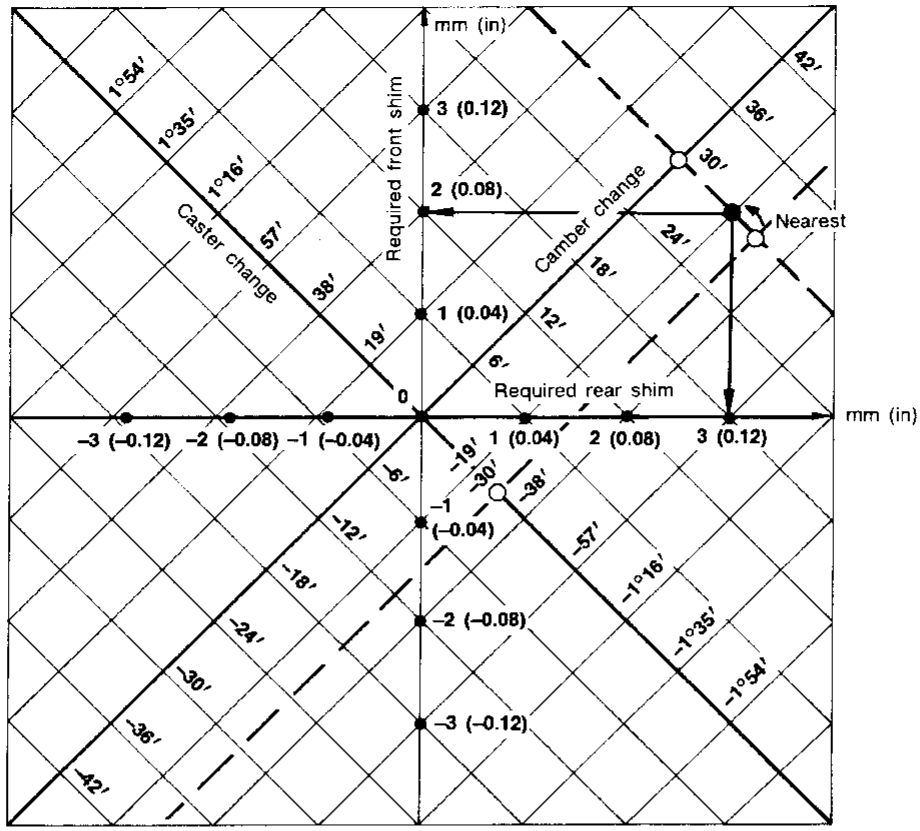

SFA477BA

4WD

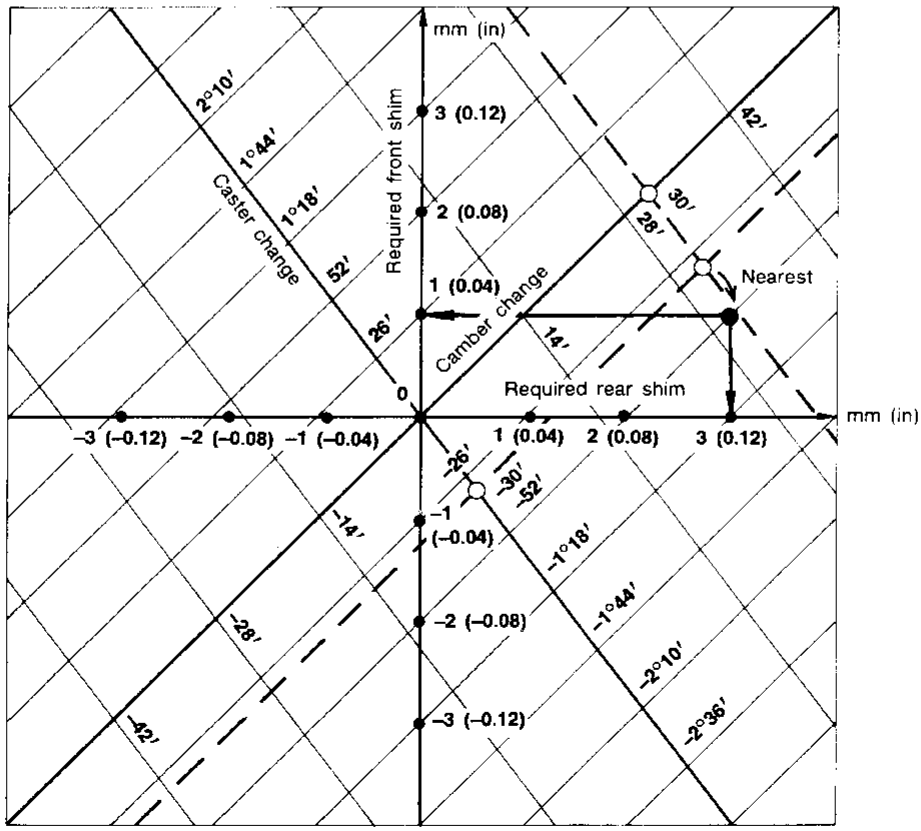

SFA478BA

Front Wheel Alignment (Cont'd)

TOE-IN

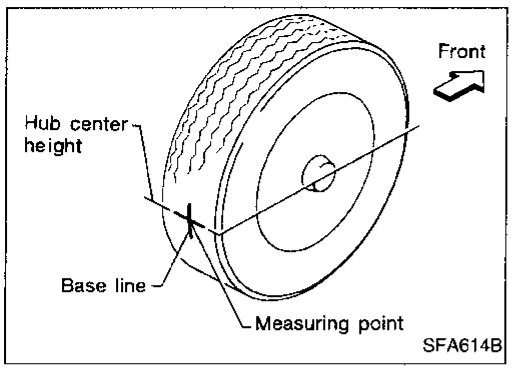

Measure toe-in using the following procedure.

WARNING:

- **Always perform the following procedure on a flat surface.**
- **Make sure that no one is in front of the vehicle before pushing it.**

1. Bounce front of vehicle up and down to stabilize the posture.
2. Push the vehicle straight ahead about 5 m (16 ft).
3. Put a mark on base line of the tread (rear side) of both tires at the same height of hub center. This mark is a measuring point.
4. Measure distance "A" (rear side).
5. Push the vehicle slowly ahead to rotate the wheels 180 degrees (1/2 turn).
   - **If the wheels have rotated more than 180 degrees (1/2 turn), try the above procedure again from the beginning. Never push vehicle backward.**
6. Measure distance "B" (front side).
   Total toe-in:
   Refer to SDS, FA-46.

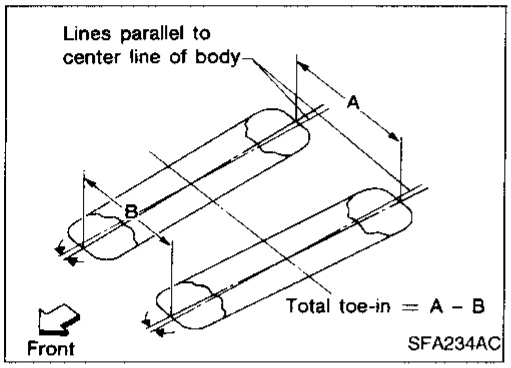

7. Adjust toe-in by varying the length of both steering tie-rods.
   a. Loosen clamp bolts or lock nuts.
   b. Adjust toe-in by turning both the left and right tie-rod tubes equal amounts.

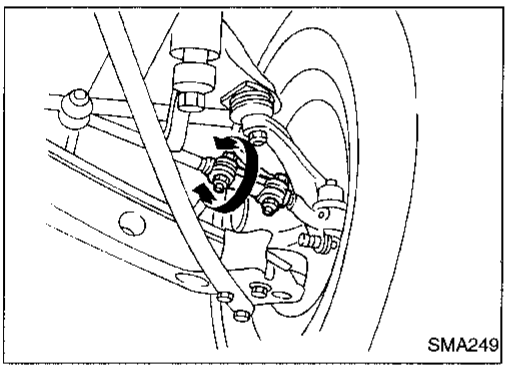

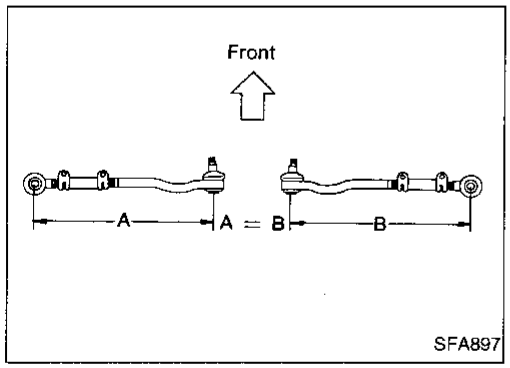

Make sure that the tie-rod bars are screwed into the tie-rod tube more than 35 mm (1.38 in).
Make sure that the tie-rods are the same length.

Standard length (A = B):
2WD
344 mm (13.54 in)
4WD
281 mm (11.06 in)

c. Tighten clamp bolts or lock nuts, then torque them.

Front Wheel Alignment (Cont'd)

FRONT WHEEL TURNING ANGLE

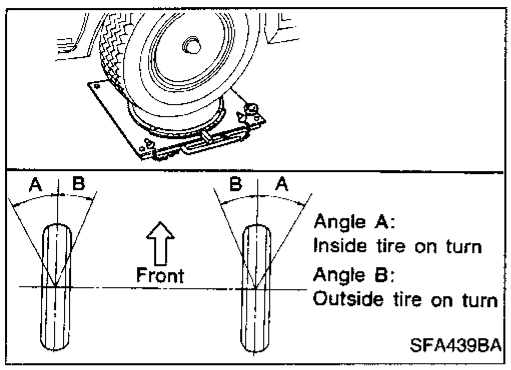

1. Set wheels in straight-ahead position. Then move vehicle forward until front wheels rest properly on turning radius gauge.
2. Rotate steering wheel all the way right and left; measure turning angle.

- On power steering models, turn steering wheel to full lock and apply force (at circumference of steering wheel) of 98 to 147 N (10 to 15 kg, 22 to 33 lb) with engine at idle.
- **Do not hold the steering wheel at full lock for more than 15 seconds.**

Wheel turning angle (Full turn):
Refer to SDS, FA-46.

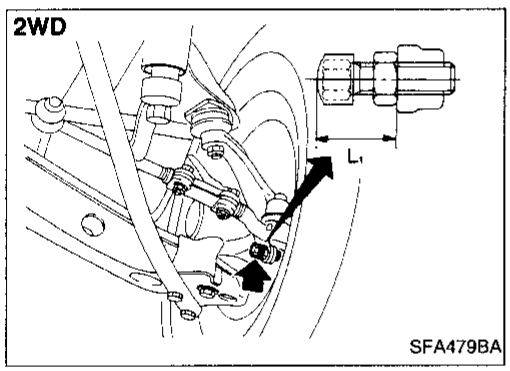

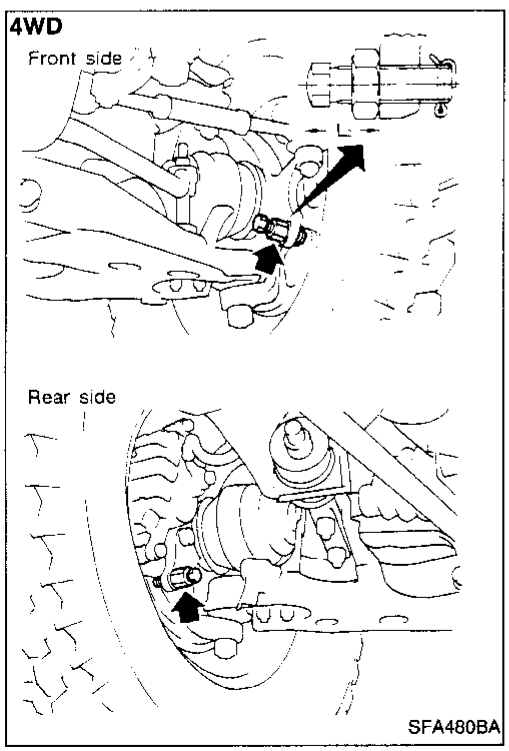

3. Adjust stopper bolt if necessary.

[2WD]
Standard length "L_1": 20 mm (0.79 in)

[4WD]
Standard length "L_2": 26.5 mm (1.043 in)

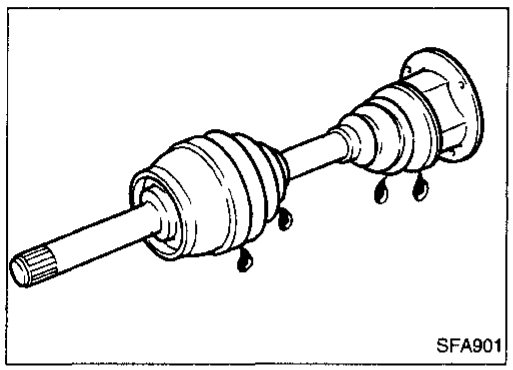

Drive Shaft

- Check for grease leakage and damage.

2WD

SEC. 400

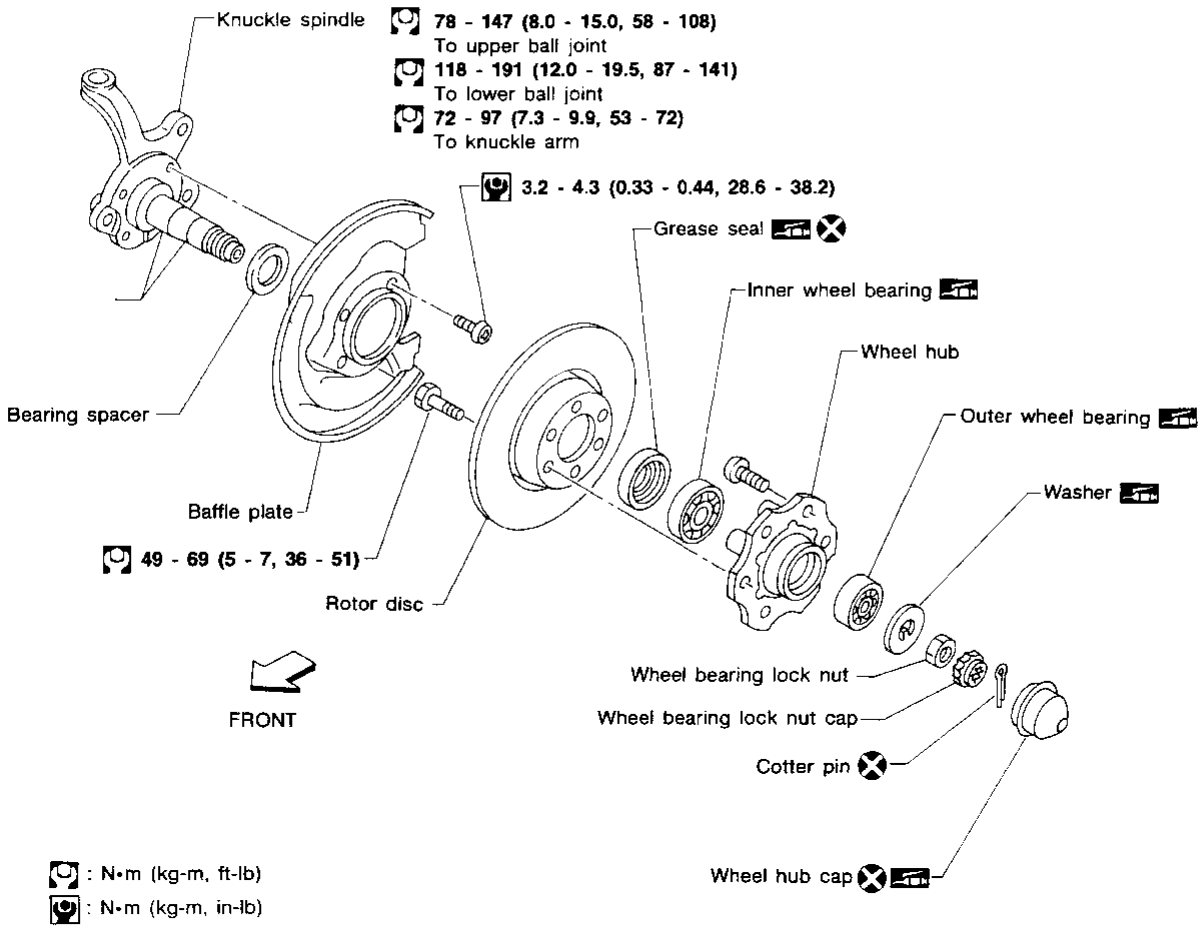

SFA559BA

4WD

SEC. 391•400

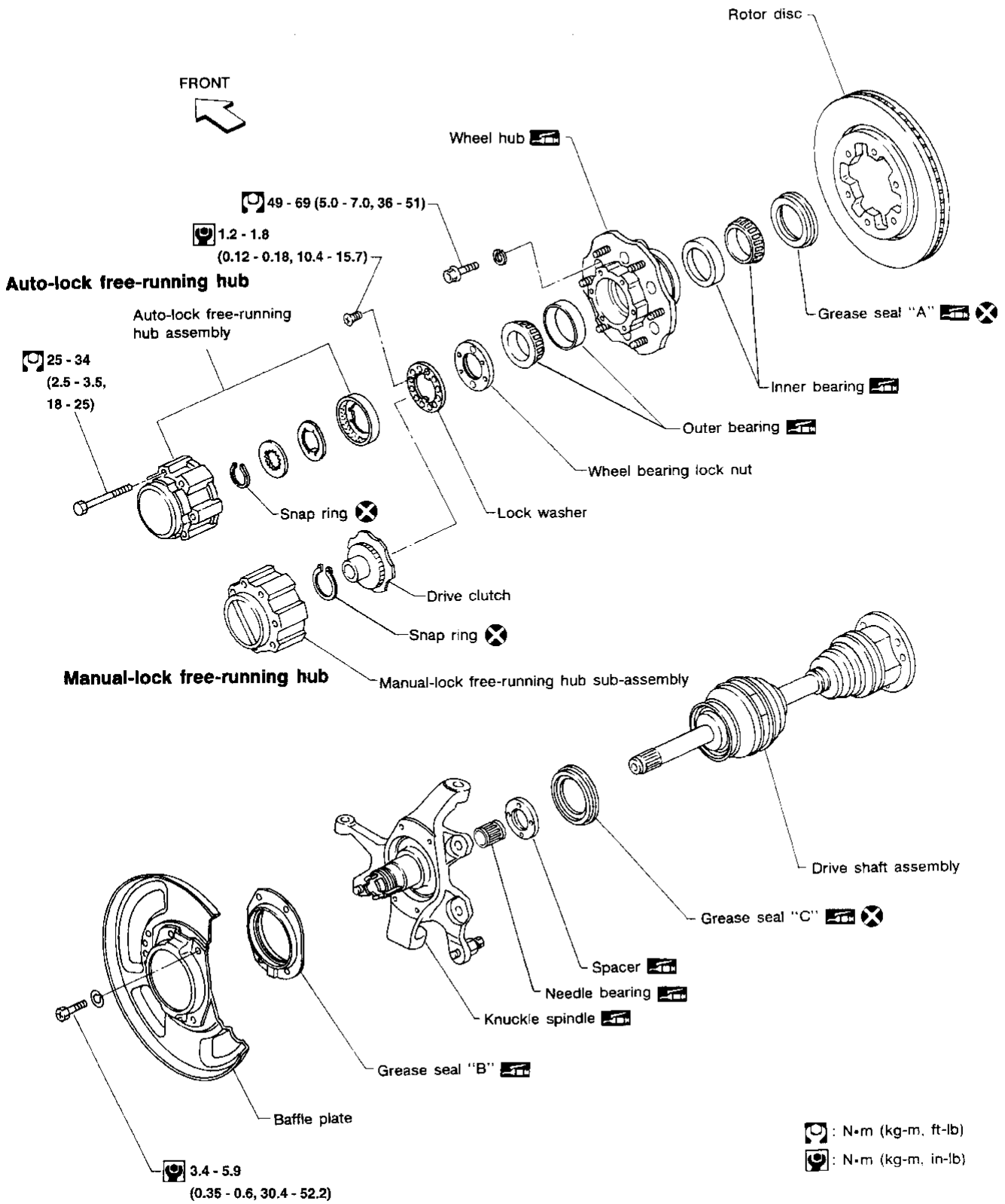

AFA104

Manual-lock Free-running Hub

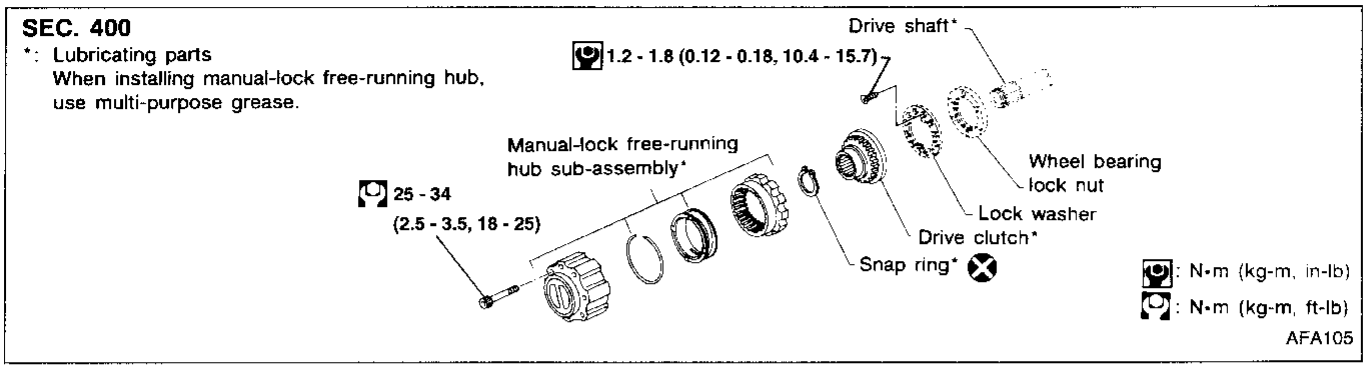

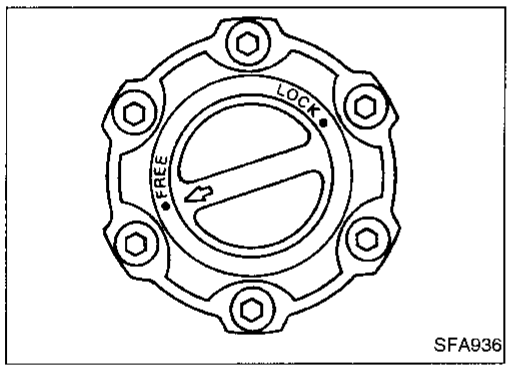

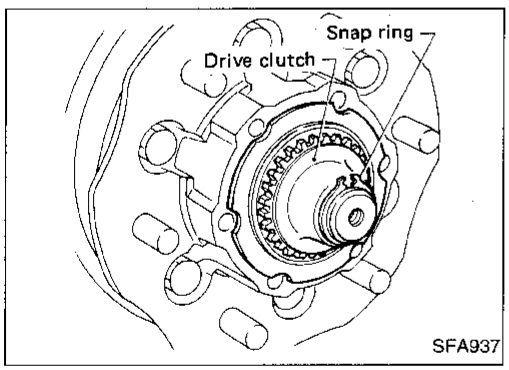

REMOVAL AND INSTALLATION

- Set knob of manual-lock free-running hub in the FREE position.
- Remove manual-lock free-running hub with brake pedal depressed.
- Remove snap ring and then draw out drive clutch.
- When installing manual-lock free-running hub, make sure the hub is in the FREE position.

Apply multi-purpose grease to the parts shown in the above illustration.

- Check operation of manual-lock free-running hub after installation.

INSPECTION

- Check that the knob moves smoothly and freely.
- Check that the clutch moves smoothly in the body.

Auto-lock Free-running Hub

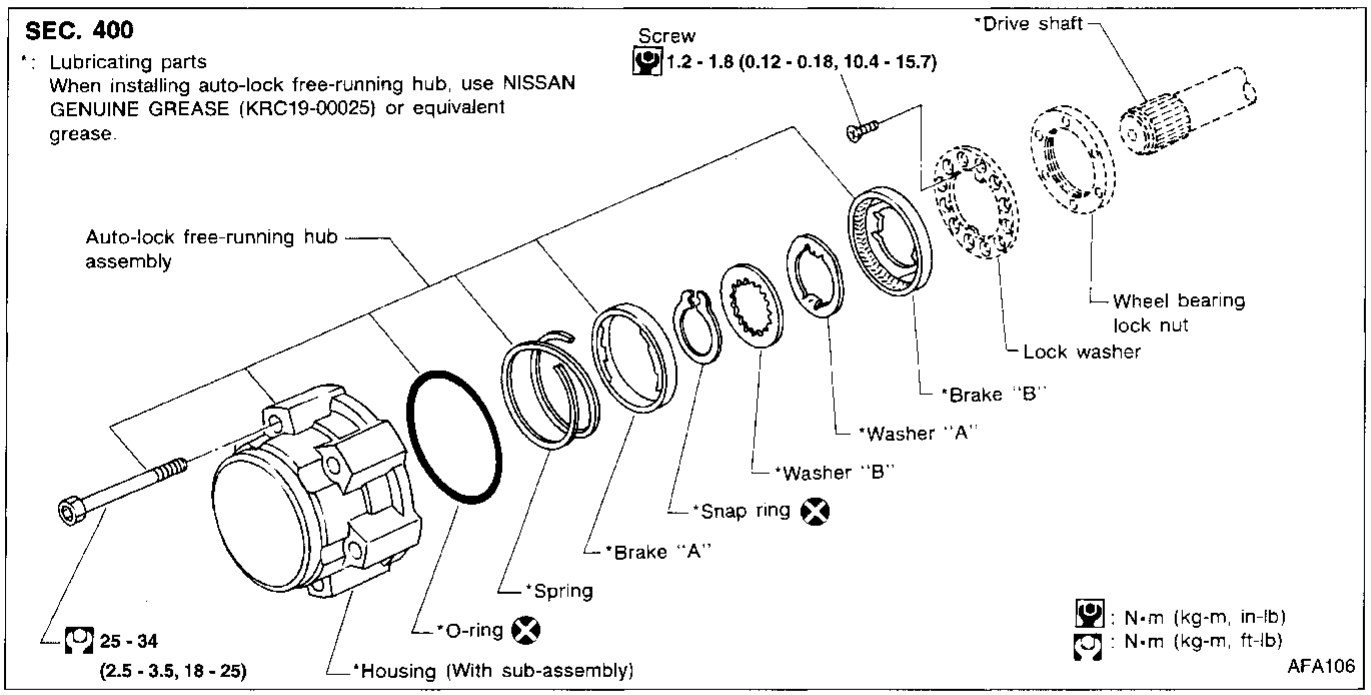

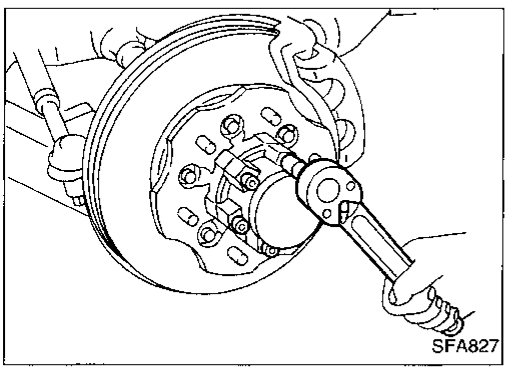

REMOVAL AND INSTALLATION

- Set auto-lock free-running hub in the FREE position.
- Remove auto-lock free-running hub with brake pedal depressed.

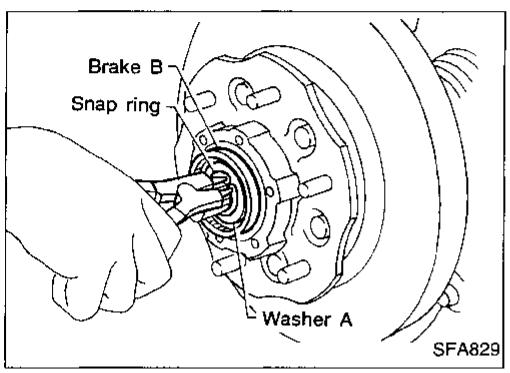

- Remove snap ring.
- Remove washer B, washer A and brake B.
- After installing auto-lock free-running hub, check operation.

When installing it, apply recommended grease to the parts shown in the above illustration.

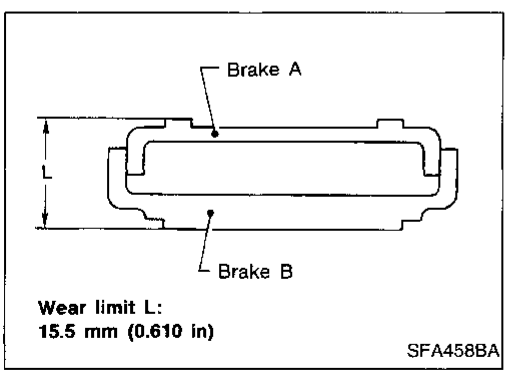

INSPECTION

Thoroughly clean parts with cleaning solvent and dry with compressed air.

Brake "A" and "B"

Measure the thickness "L" of brake "A" and "B".
If thickness is less than the specified limit, replace brake "A" and "B" as a set.

Auto-lock Free-running Hub (Cont'd)

TROUBLE-SHOOTING

Noise occurring in the auto-lock free-running hub under any of the conditions described below is not indicative of a problem. Noise can be eliminated by properly operating the transfer lever.

Noise

↓

Was the transfer lever shifted from the "2H" to the "4H" position while the vehicle was operated at a speed greater than 40 km/h (25 MPH)?

Yes → Shifting the transfer lever from the "2H" to the "4H" position in high-speed operation (Fig. A → Fig. B), is sometimes difficult. At this point, a clattering occurs in the auto hub. If shifting is stopped halfway, the drive shaft no longer rotates and the cam is held in the "LOCK" position (Fig. B). In this case, the noise will continue until the vehicle is stopped. When this occurs, decrease vehicle speed to less than 40 km/h (25 MPH), return the transfer lever to the "2H" position once and then reshift to the "4H" position. Gears will then be engaged and the noise will cease (Fig. C).

No ↓

Ⓐ

(Go to next page.)

A

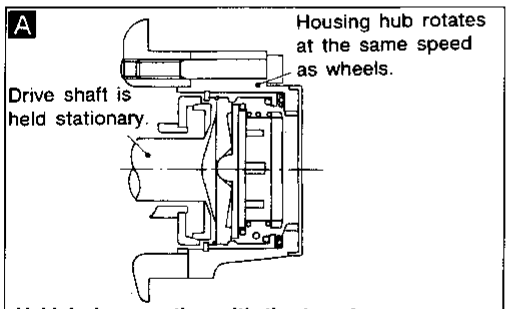

Vehicle in operation with the transfer lever in the "2H" position SFA516A

B

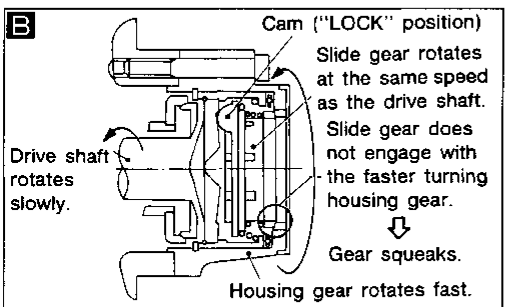

While shifting the transfer lever from the "2H" to the "4H" position SFA517A

C

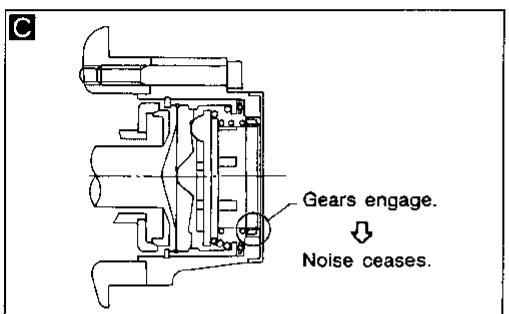

Transfer lever in the "4H" position SFA518A

Auto-lock Free-running Hub (Cont'd)

Ⓐ

Was the transfer lever shifted from the "2H" to the "4H" position while the vehicle was operated at a speed less than 40 km/h (25 MPH)?

Yes →

When noise occurs in the auto hub while shifting from the "2H" to the "4H" position (Fig. A → Fig. B), do not stop shifting halfway. When shifted to the "4H" position, the "4WD" pilot lamp will come on to indicate that the gears are engaged properly and that the vehicle is set in the 4WD mode. Noise will then cease (Fig. C). If shifting is stopped halfway, noise will continue. In such a case, return the transfer lever to the "2H" position once and re-shift it to the "4H" position. Gears will then be engaged and the noise will cease (Fig. C). (If the lever is left in the "2H" position, the noise will continue until the vehicle is stopped.)

No ↓

Ⓑ

(Go to next page.)

Auto-lock Free-running Hub (Cont'd)

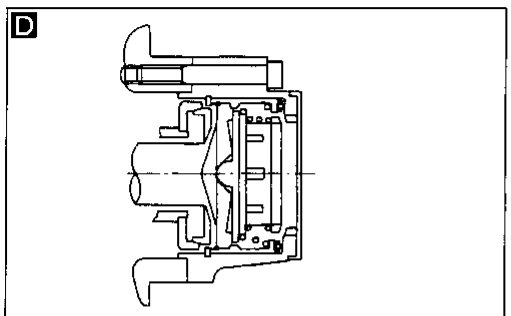

Vehicle stoppage SFA519A

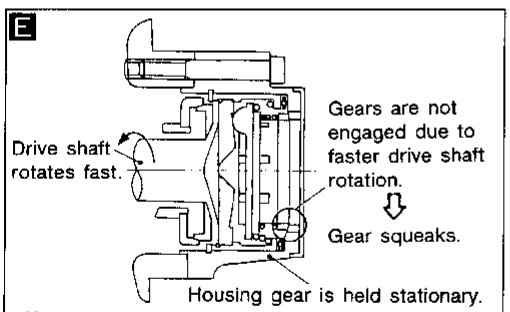

Abrupt standing start/acceleration while rear wheels are slipping SFA520A

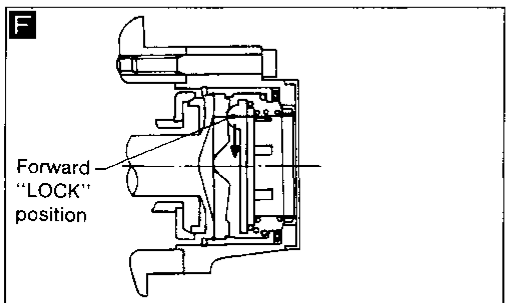

Vehicle starting to back up SFA521A

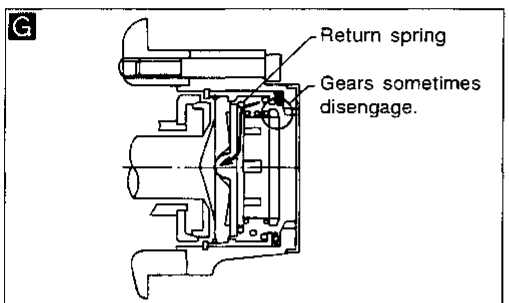

Gears in "unlocked" condition SFA522A

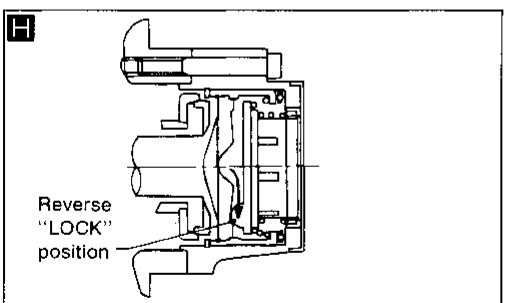

Gears engaged in reverse SFA523A

Ⓑ

Was the vehicle started after the transfer lever was shifted from the "2H" to the "4H" or "4L" position?

- Yes → A clicking noise can sometimes occur in the auto hub when the gears are engaged. This is not a problem. Noise can be encountered during rapid acceleration while rear wheels are slipping on snowy roads, muddy roads, slopes, etc. (Fig. D → Fig. E). In such a case, release the accelerator pedal to reduce engine speed. Gears will then be engaged and the noise will cease (Fig. C).
- No ↓

Was the vehicle backed up when the transfer lever was in the "4H" or the "4L" position, or was the vehicle backed up while on a downgrade when the transfer lever was in the "4H" or the "4L" position?

- Yes → When backing up the vehicle with the transfer in the "4H" or the "4L" position, auto-hub gears sometimes disengage but soon reengage (Fig. F → Fig. G → Fig. H) with a clicking noise. This is not a problem. Noise will also occur if the vehicle is accelerated rapidly while the gears are disengaged. In such a case, release the accelerator pedal once to decrease engine speed. Gears will then be engaged and the noise will cease (Fig. C).
- No ↓

Was the vehicle turned on a dry pavement, when the transfer lever was in the "4H" or the "4L" position?

- Yes → Under these conditions, noise occurs in tires (creaking) or in the power train (rattling) — not in the auto hub. Avoid driving in the conditions described above as it may lead to tire wear.
- No ↓

Ⓒ

(Go to next page.)

Auto-lock Free-running Hub (Cont'd)

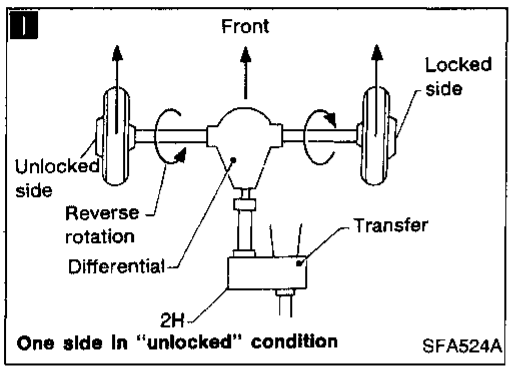

Ⓒ

Was the vehicle moved in one direction after the vehicle was driven in another direction when the transfer lever was in the "4H" or the "4L" position and then returned to the "2H" position?

Yes →

Auto-hub gears will disengage with a resultant noise (clicking). If the distance the vehicle is moved in the opposite direction is short [less than 1 m (3 ft)] or if the rotation angle of the left and right wheels is not the same (as in rounding a corner), gears on one side will disengage (Fig. I). Under this condition, a noise (crushing, etc.) might occur while driving in the "2H" position. If only gears on one side are unlocked, the locked drive shaft rotates at the same speed as wheels; however, the unlocked drive shaft is made to rotate in the reverse direction by the differential. This forces the auto hub's slide gear to lock in the reverse direction. As a result, noise occurs.
If this happens, slowly move the vehicle straight back approximately 2 to 3 m (7 to 10 ft) with the transfer lever in the "2H" position to disengage the gears on the other side.

No ↓

Ⓓ

(Go to next page.)

Auto-lock Free-running Hub (Cont'd)

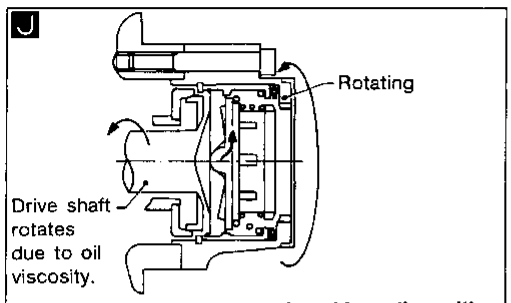

Vehicle operating in extremely cold weather with transfer lever in the "2H" position

SFA525A

Ⓓ

Was the vehicle driven with the transfer lever in the "2H" position in extremely cold weather?

Yes → In extremely cold weather (areas), the viscosity of differential oil is greater than in moderate weather. When the auto hubs are unlocked with the transfer lever set to the "2H" position, one auto hub can sometimes remain locked. This causes noise during operation. Noise can also occur in the auto hub when the front propeller shaft is rotated due to the viscosity resistance of the transfer fluid (Fig. J).
In such a case, drive in the "4H" position for approximately 10 minutes until the vehicle warms up, and return the transfer lever to the "2H" position to eliminate the noise.

No → Disassemble and check the auto hub. Refer to FA-18.

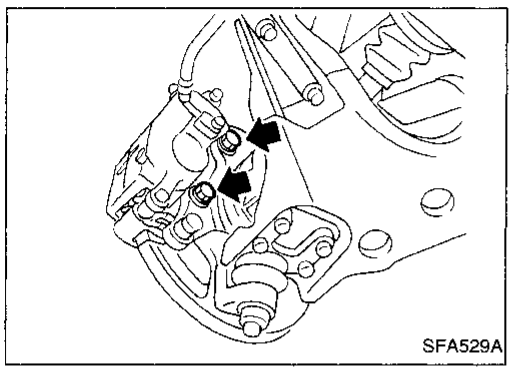

Wheel Hub and Rotor Disc

REMOVAL AND INSTALLATION

- Remove free-running hub assembly. — 4WD —
  Refer to FRONT AXLE (4WD) — Auto-lock Free-running Hub or Manual-lock Free-running Hub, FA-17.
- Remove brake caliper assembly without disconnecting hydraulic line.

Be careful not to depress brake pedal, or piston will pop out. Make sure brake hose is not twisted.

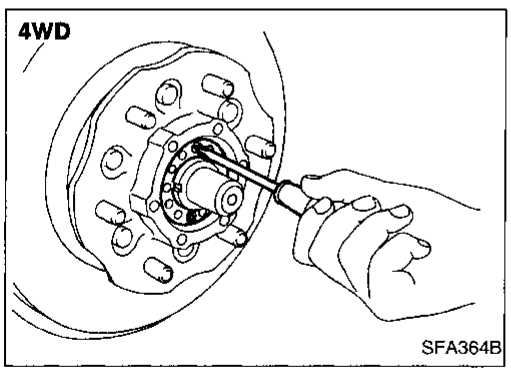

- Remove lock washer. — 4WD —

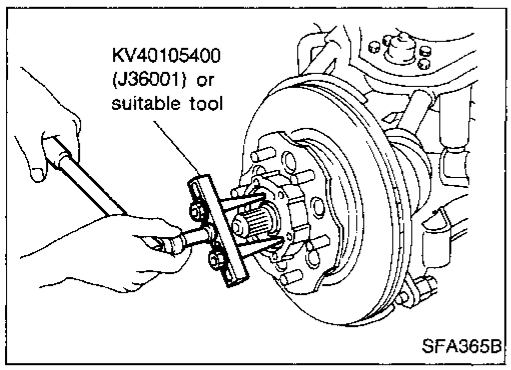

- Remove wheel bearing lock nut.
  2WD: With suitable tool
  4WD: With Tool

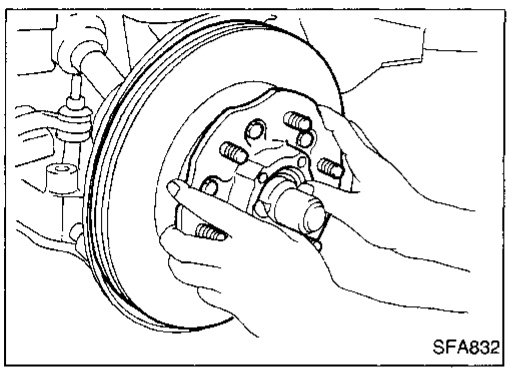

- Remove wheel hub and wheel bearing.

Be careful not to drop outer bearing.

- After installing wheel hub and wheel bearing, adjust wheel bearing preload.
  Refer to PRELOAD ADJUSTMENT of Front Wheel Bearing in ON-VEHICLE SERVICE, FA-6.

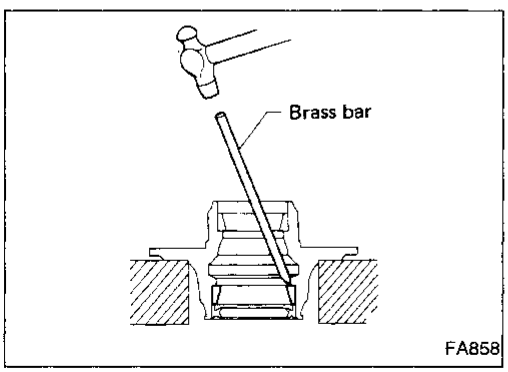

DISASSEMBLY

- Remove bearing outer races with suitable brass bar.

Wheel Hub and Rotor Disc (Cont'd)

INSPECTION

Thoroughly clean wheel bearings and wheel hub.

Wheel bearings

- Make sure wheel bearings roll freely and are free from noise, cracks, pitting and wear.

Wheel hub

- Check wheel hub for cracks by using a magnetic exploration or dyeing test.

ASSEMBLY

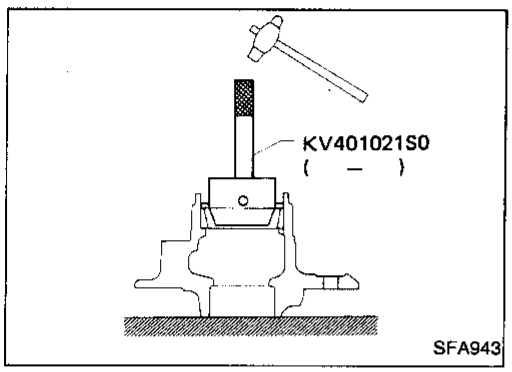

- Install bearing outer race with Tool until it seats in hub.

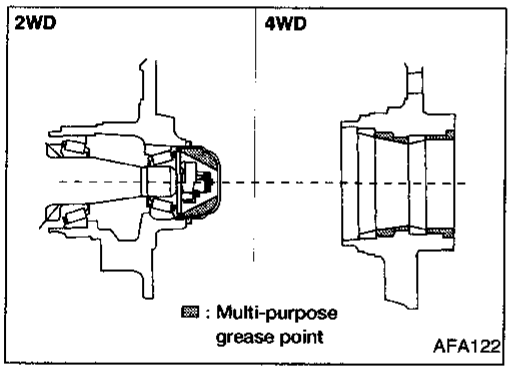

- Pack multi-purpose grease in wheel hub and hub cap.

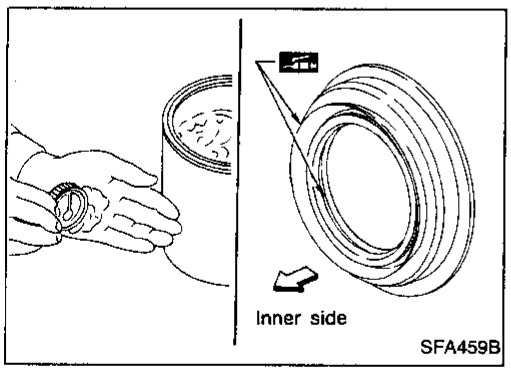

- Apply multi-purpose grease to each bearing cone.
- Pack grease seal lip with multi-purpose grease, then install it into wheel hub with suitable drift.

Knuckle Spindle

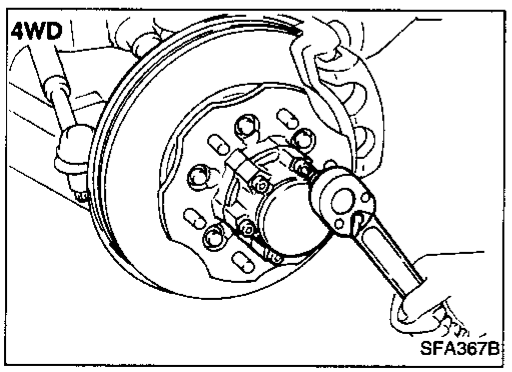

REMOVAL

- Remove free-running hub assembly. — 4WD —
  Refer to FRONT AXLE (4WD) — Auto-lock Free-running Hub or Manual-lock Free-running Hub, FA-17.

Knuckle Spindle (Cont'd)

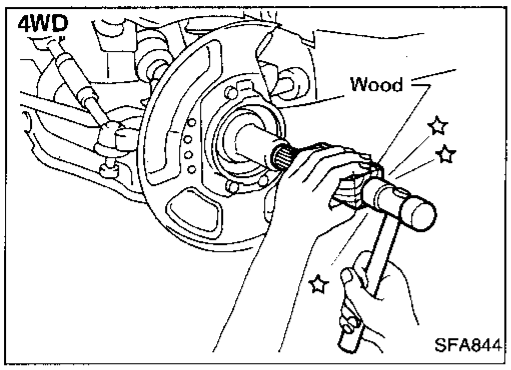

- Separate drive shaft from knuckle spindle by slightly tapping drive shaft end. — 4WD —

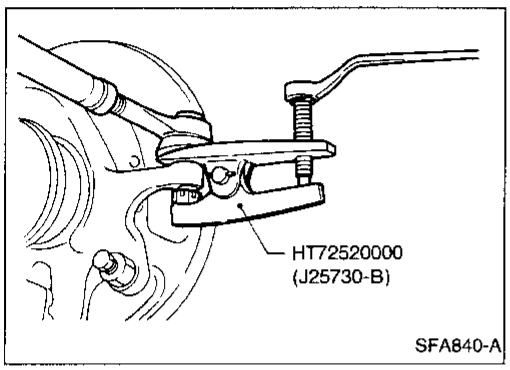

- Separate tie-rod from knuckle spindle with Tool.

Install stud nut conversely on stud bolt so as not to damage stud bolt.

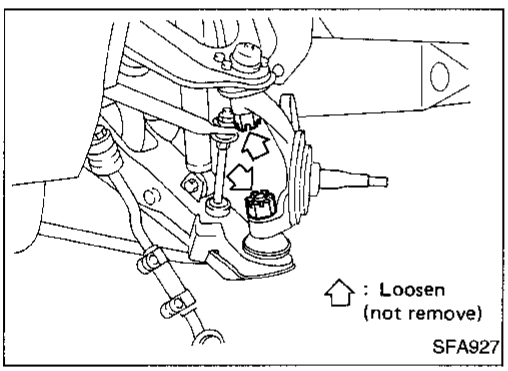

- Separate knuckle spindle from ball joints.

(1) Loosen (do not remove) upper and lower ball joint tightening nuts.

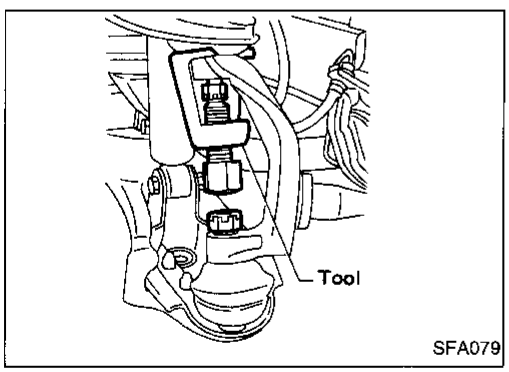

(2) Separate knuckle spindle from upper and lower ball joint studs with Tool.

During above operation, never remove ball joint nuts which are loosened in step (1) above.

Tool:

2WD

ST29020001 (J24319-01)

4WD

HT72520000 (J25730-B)

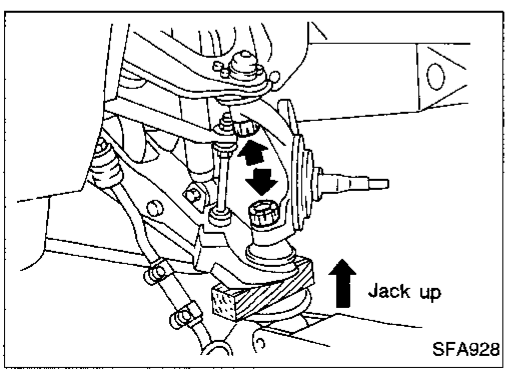

(3) Remove ball joint tightening nuts.

Support lower link with jack.

(4) Remove knuckle spindle from upper and lower links.

INSPECTION

Knuckle spindle

- Check knuckle spindle for deformation, cracks and other damage by using a magnetic exploration or dyeing test.

Knuckle Spindle (Cont'd)

Bearing spacer — 2WD —

- Check bearing spacer for damage.

Needle bearing — 4WD —

- Check needle bearing for wear, scratches, pitting, flaking and burn marks.

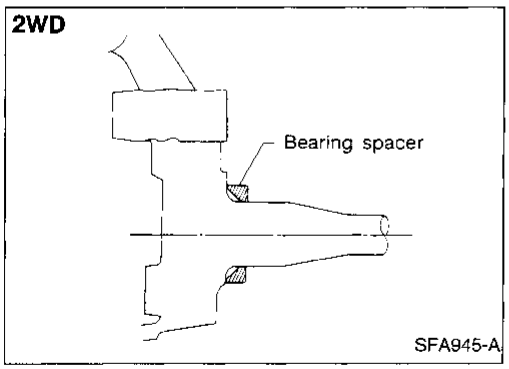

INSTALLATION

- Install bearing spacer onto knuckle spindle. — 2WD —

Make sure that bearing spacer is facing in proper direction.
Apply multi-purpose grease.

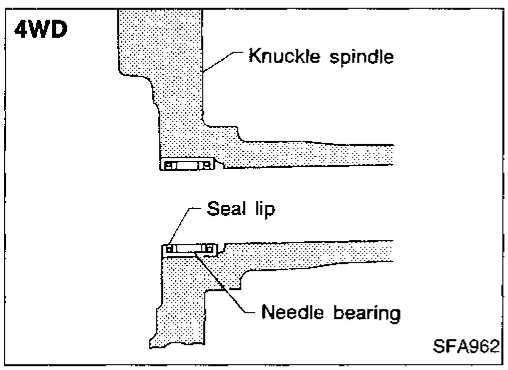

- Install needle bearing into knuckle spindle. — 4WD —

Make sure that needle bearing is facing in the proper direction.
Apply multi-purpose grease.

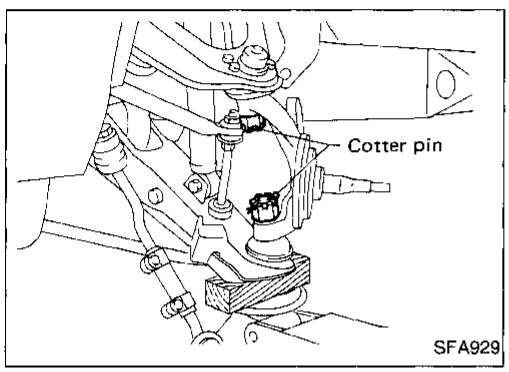

- Install knuckle spindle to upper and lower ball joints with lower link jacked up.

CAUTION:
Make sure that oil and grease do not come into contact with tapered areas of ball joint, knuckle spindle and threads of ball joint.

- Connect tie-rod to knuckle spindle.

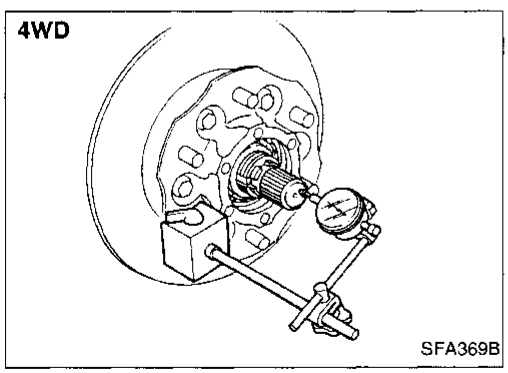

- After installing knuckle spindle, adjust wheel bearing preload. Refer to PRELOAD ADJUSTMENT of Front Wheel Bearing in ON-VEHICLE SERVICE, FA-6.
- After installing drive shaft, check drive shaft axial end play.

Do not reuse snap ring once it has been removed.

Refer to FRONT AXLE (4WD) — Drive shaft, FA-28.

Drive Shaft

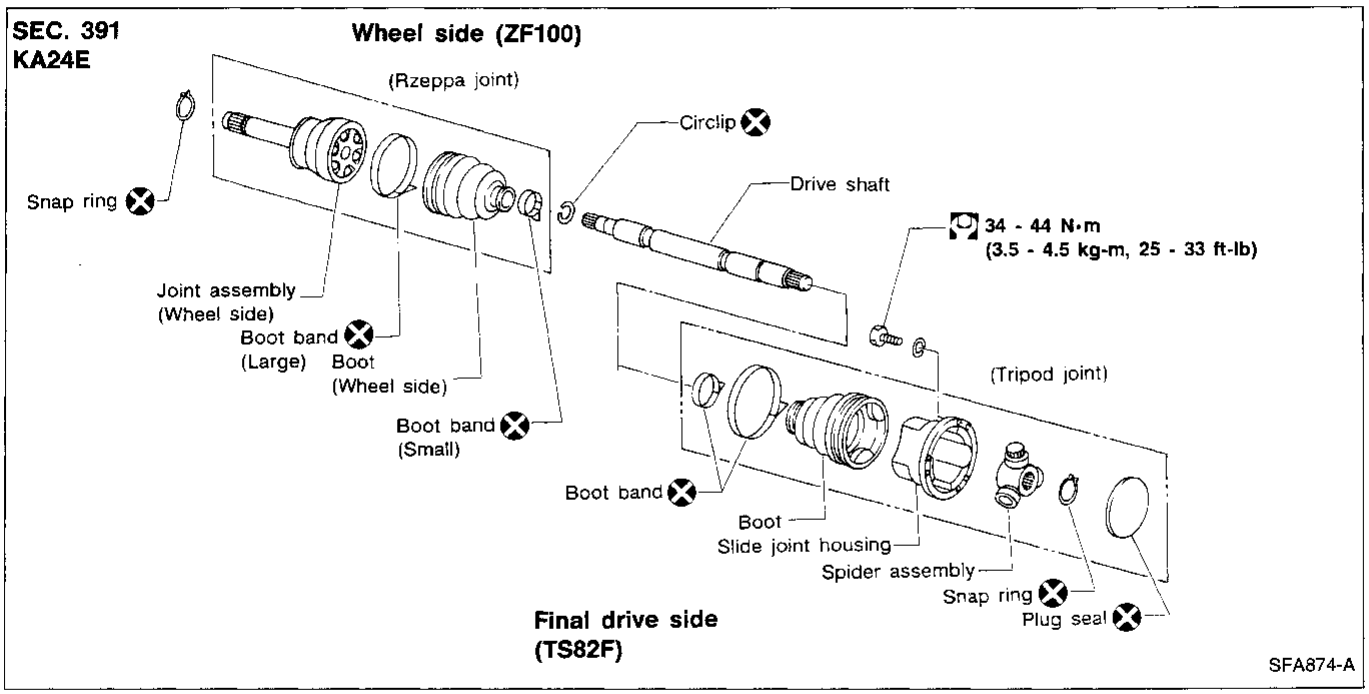

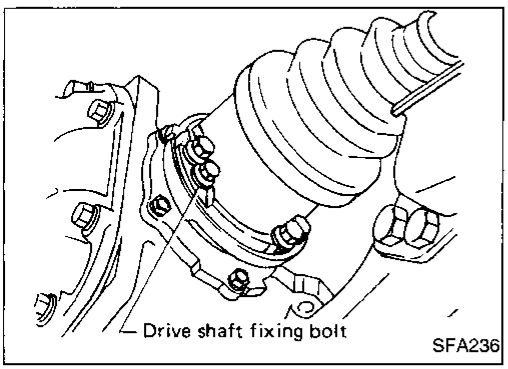

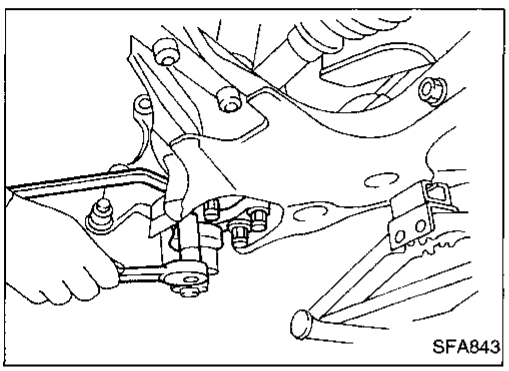

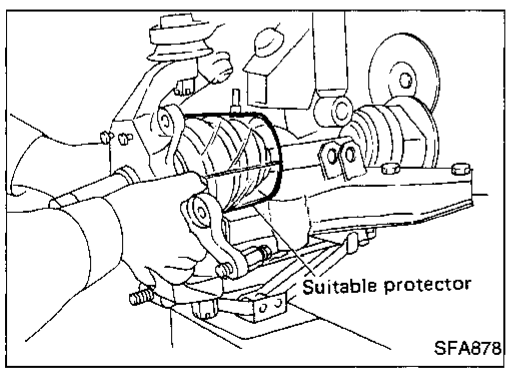

REMOVAL

1. Remove bolts fixing drive shaft to final drive.
2. Remove free-running hub assembly with brake pedal depressed. Refer to FRONT AXLE (4WD) — Auto-lock Free-running Hub or Manual-lock Free-running Hub, FA-17.
3. Remove brake caliper assembly without disconnecting brake hydraulic line.

Be careful not to depress brake pedal, or piston will pop out. Make sure that the brake hose is not twisted.

4. Remove tie-rod ball joint. Refer to FRONT AXLE — Knuckle Spindle, FA-25.
5. Remove nuts fixing lower ball joint on lower link.

Support lower link with jack.

6. Remove upper ball joint fixing bolt.
7. Remove shock absorber lower bolt.
8. Remove drive shaft with knuckle.

Cover drive shaft boot with a suitable protector.

Drive Shaft (Cont'd)

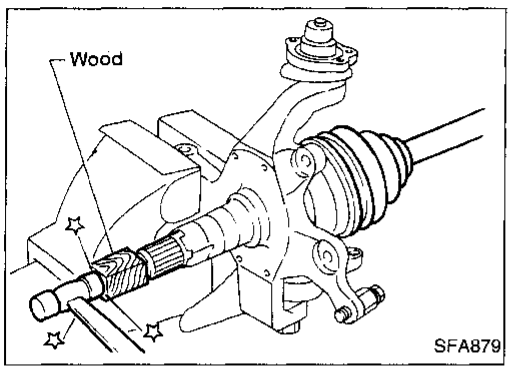

9. Separate drive shaft from knuckle by slightly tapping it.

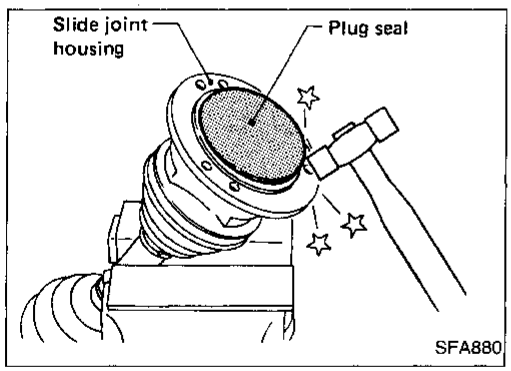

DISASSEMBLY

Final drive side (TS82F)

1. Remove plug seal from slide joint housing by lightly tapping around slide joint housing.
2. Remove boot bands.

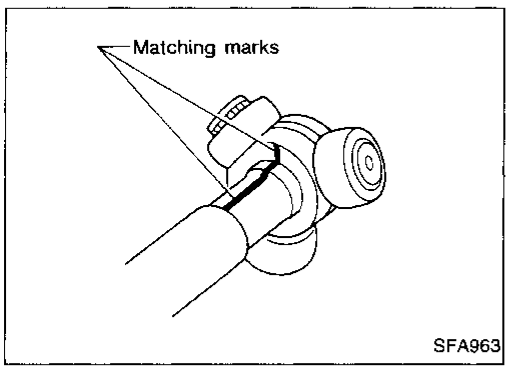

3. Move boot and slide joint housing toward wheel side, and put matching marks.

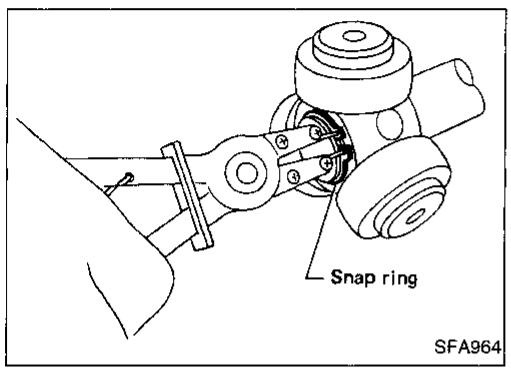

4. Remove snap ring.

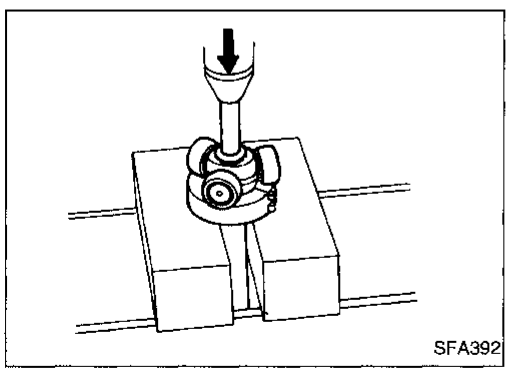

5. Detach spider assembly with press.

Drive Shaft (Cont'd)

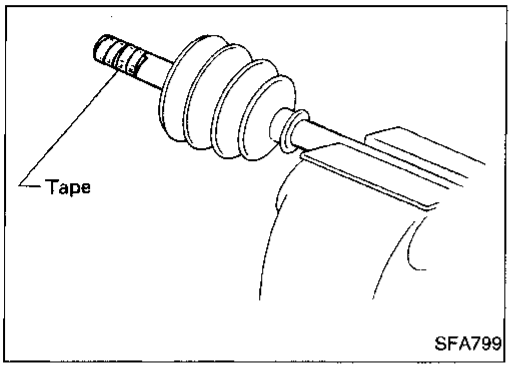

6. Draw out boot.

Cover drive shaft serration with tape to prevent damaging the boot.

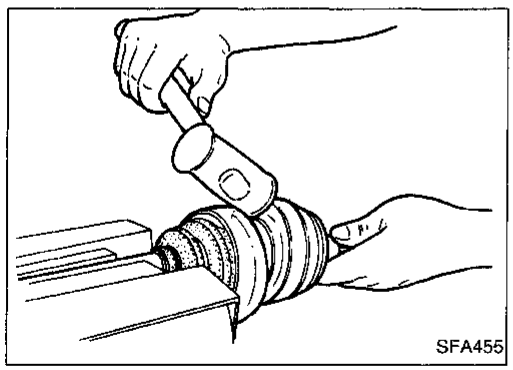

Wheel side (ZF100)

CAUTION:

The joint on the wheel side cannot be disassembled.

- Before separating joint assembly, put matching marks on drive shaft and joint assembly.
- Separate joint assembly with suitable tool.

Be careful not to damage threads on drive shaft.

- Remove boot bands.

INSPECTION

Thoroughly clean all parts in cleaning solvent, and dry with compressed air. Check parts for evidence of deformation or other damage.

Drive shaft

Replace drive shaft if it is twisted or cracked.

Boot

Check boot for fatigue, cracks and wear. Replace boot with new boot bands.

Joint assembly (Final drive side)

- Replace any parts of double offset joint which show signs of scorching, rust, wear or excessive play.
- Check serration for deformation. Replace if necessary.
- Check slide joint housing for any damage. Replace if necessary.

Joint assembly (Wheel side)

Replace joint assembly if it is deformed or damaged.

ASSEMBLY

- **After drive shaft has been assembled, ensure that it moves smoothly over its entire range without binding.**
- **Use NISSAN GENUINE GREASE or equivalent after every overhaul.**

Drive Shaft (Cont'd)

Final drive side (TS82F)

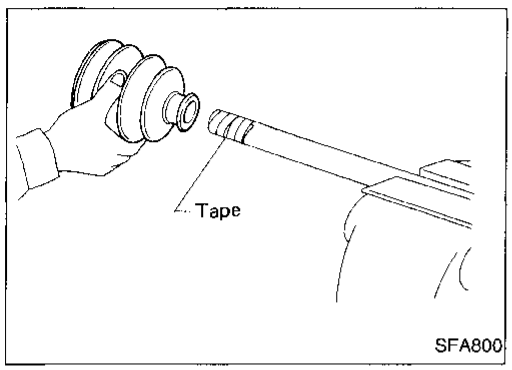

1. Install new small boot band, boot and side joint housing to drive shaft.

Cover drive shaft serration with tape to prevent damaging boot during installation.

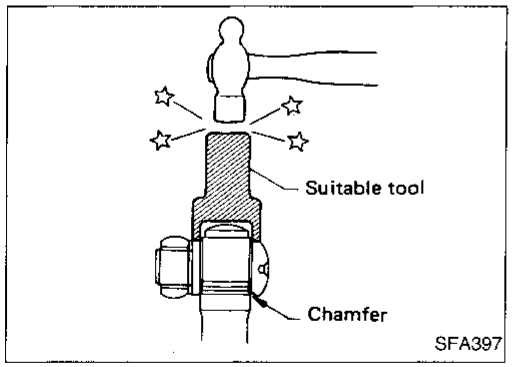

2. Install spider assembly securely, making sure marks are properly aligned.
- **Press-fit with spider assembly serration chamfer facing shaft.**
3. Install new snap ring.

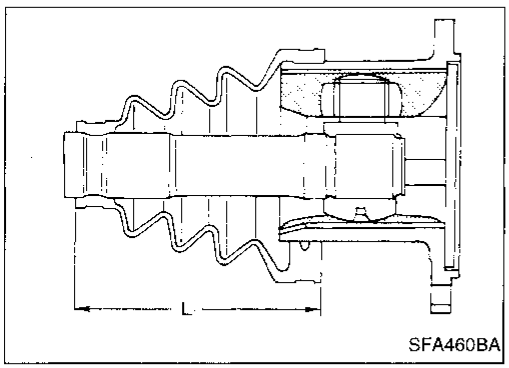

4. Pack with grease.
   Specified amount of grease:
   95 - 105 g (3.35 - 3.70 oz)
5. Make sure that the boot is properly installed on the drive shaft groove. Set the boot so that it does not swell or deform when its length is "L_1".
   Length "L_1": 95 - 97 mm (3.74 - 3.82 in)

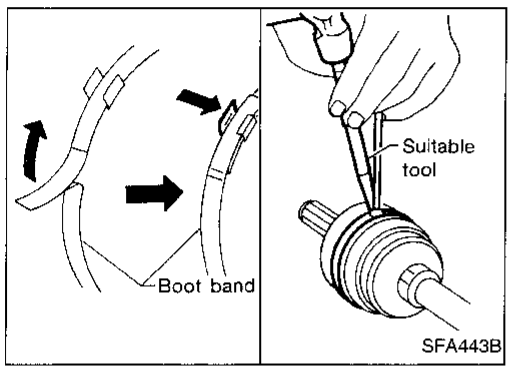

6. Lock new large boot band securely with a suitable tool, then lock new small boot band.
7. Install new plug seal to slide joint housing by lightly tapping it.

Apply sealant to mating surface of plug seal.

Wheel side (ZF100)

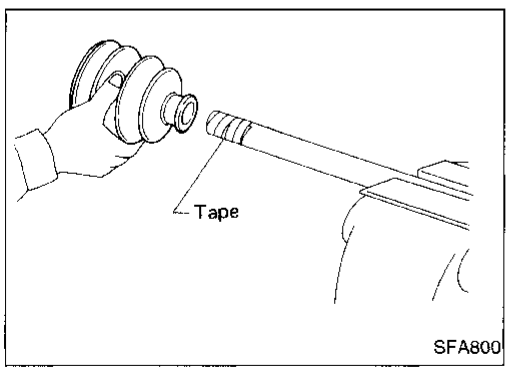

1. Install new small boot band and boot on drive shaft.

Cover drive shaft serration with tape to prevent damaging boot during installation.

Drive Shaft (Cont'd)

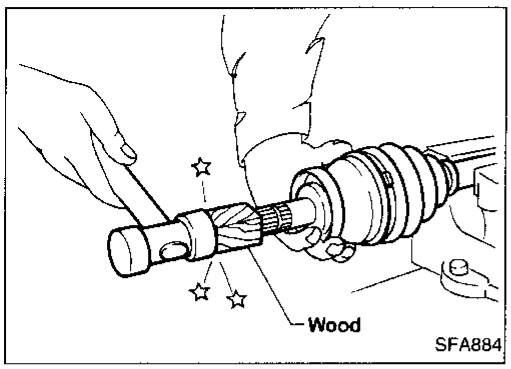

2. Set joint assembly onto drive shaft by lightly tapping it. Install joint assembly securely, ensuring that marks which were made during disassembly are properly aligned.

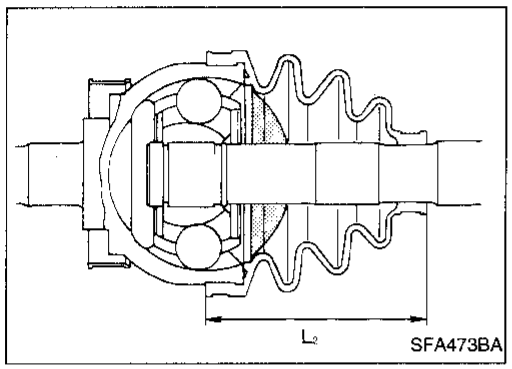

3. Pack drive shaft with specified amount of grease.
   Specified amount of grease:
   135 - 145 g (4.76 - 5.11 oz)
4. Make sure that the boot is properly installed on the drive shaft groove. Set the boot so that it does not swell or deform when its length is "L_2".
   Length "L_2": 96 - 98 mm (3.78 - 3.86 in)
5. Lock new large boot band securely with a suitable tool.
6. Lock new small boot band.

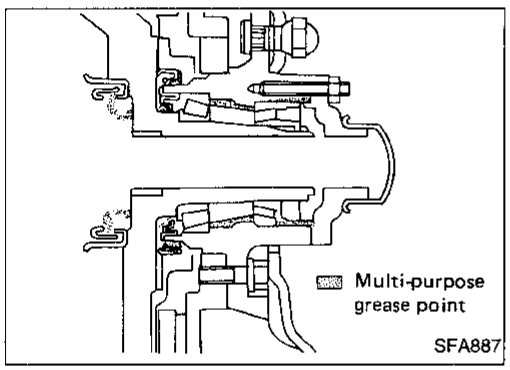

INSTALLATION

- Apply multi-purpose grease.

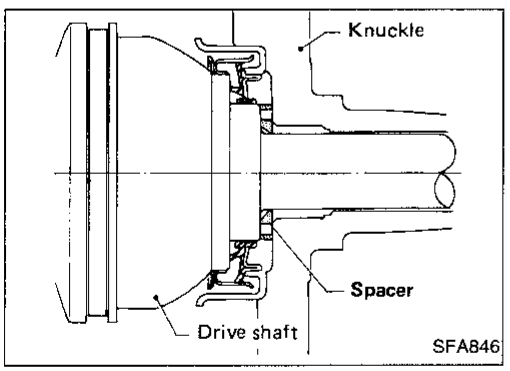

- Install bearing spacer onto drive shaft.

Make sure that the bearing spacer is facing in the proper direction.

- After installing wheel hub and wheel bearing, adjust wheel bearing preload. Refer to PRELOAD ADJUSTMENT of Front Wheel Bearing in ON-VEHICLE SERVICE, FA-6.

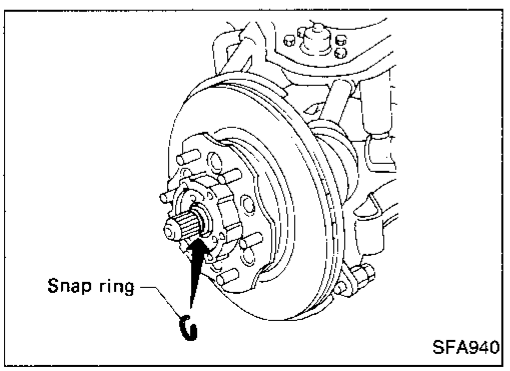

- When installing drive shaft, adjust drive shaft axial end play by selecting a suitable snap ring.

(1) Temporarily install new snap ring on drive shaft in the same thickness as it was installed before removal.

Drive Shaft (Cont'd)

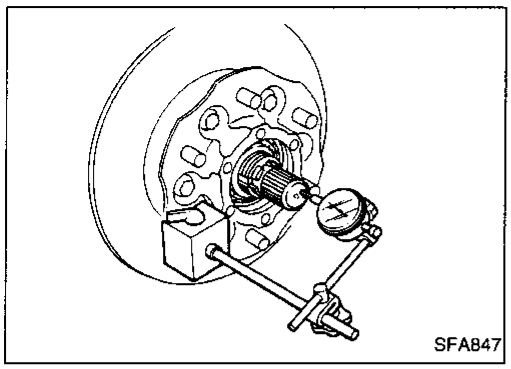

(2) Set dial gauge on drive shaft end.
(3) Measure axial end play of drive shaft.
Axial end play:
0.45 mm (0.0177 in) or less
(4) If axial end play is not within the specified limit, select another snap ring.

1.1 mm (0.043 in)	**1.3 mm (0.051 in)**
1.5 mm (0.059 in)	**1.7 mm (0.067 in)**
1.9 mm (0.075 in)	**2.1 mm (0.083 in)**
2.3 mm (0.091 in)	

2WD

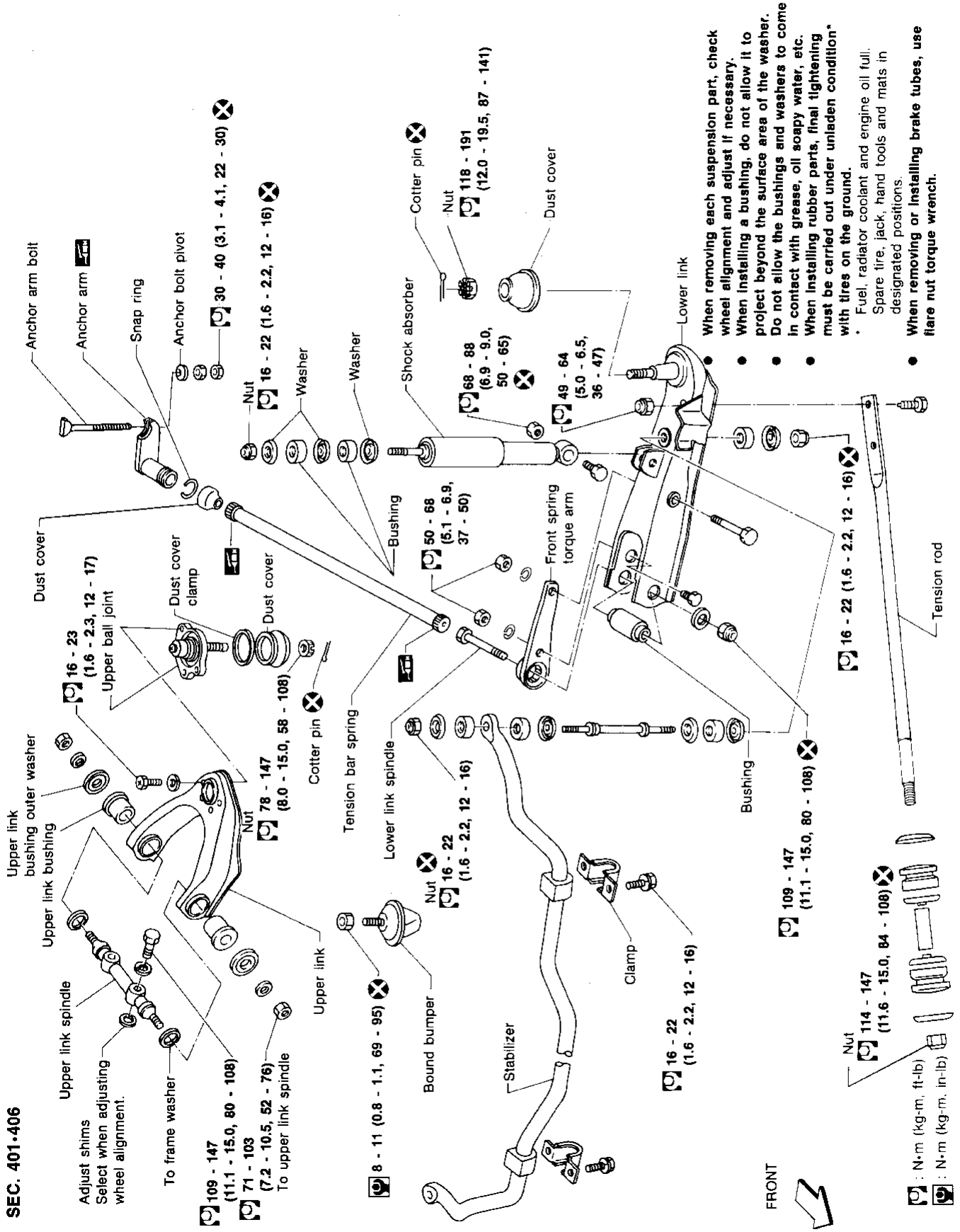

SEC. 401•406

SFA557BA

4WD

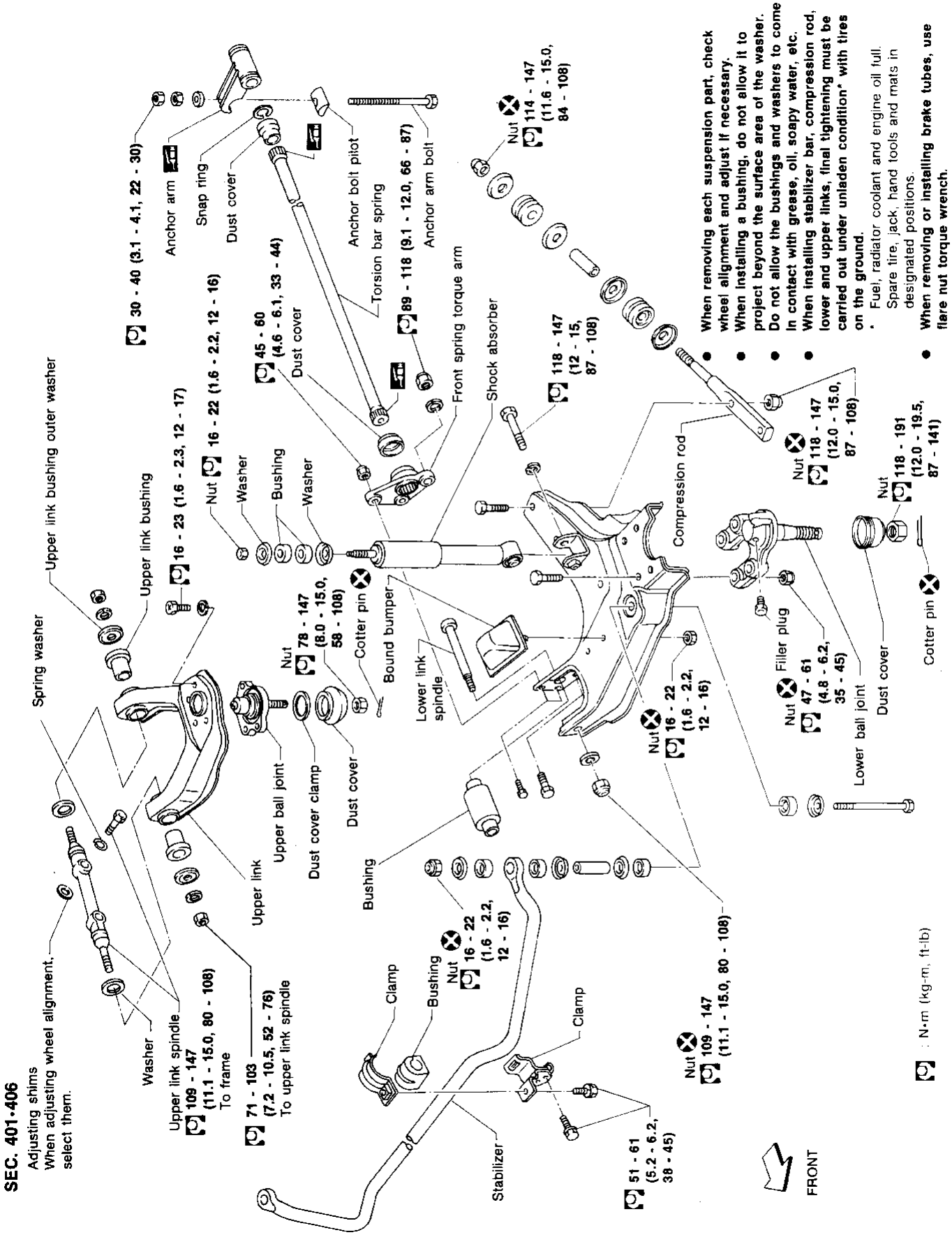

- When removing each suspension part, check wheel alignment and adjust if necessary.
- When installing a bushing, do not allow it to project beyond the surface area of the washer.
- Do not allow the bushings and washers to come in contact with grease, oil, soapy water, etc.
- When installing stabilizer bar, compression rod, lower and upper links, final tightening must be carried out under unladen condition* with tires on the ground.

* Fuel, radiator coolant and engine oil full. Spare tire, jack, hand tools and mats in designated positions.

- When removing or installing brake tubes, use flare nut torque wrench.

AFA098

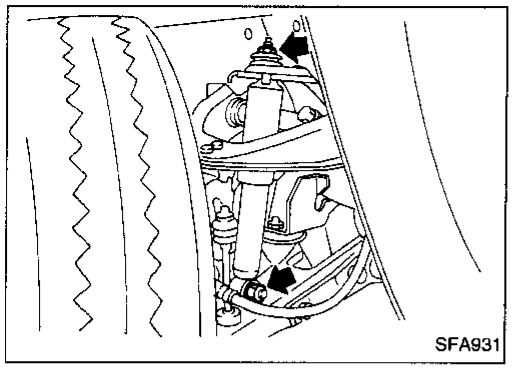

Shock Absorber

REMOVAL AND INSTALLATION

When removing and installing shock absorber, do not allow oil or grease to contact rubber parts.

INSPECTION

Except for nonmetallic parts, clean all parts with suitable solvent and dry with compressed air.
Use compressed air to blow dirt and dust off of nonmetallic parts.

- Check for oil leakage and cracks. Replace if necessary.
- Check piston rod for cracks, deformation and other damage. Replace if necessary.
- Check rubber parts for wear, cracks, damage and deformation. Replace if necessary.

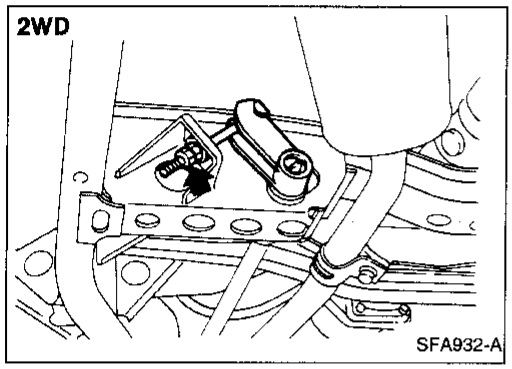

Torsion Bar Spring

REMOVAL

- Remove adjusting nut.

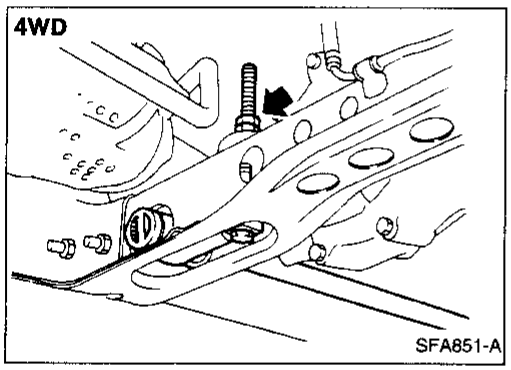

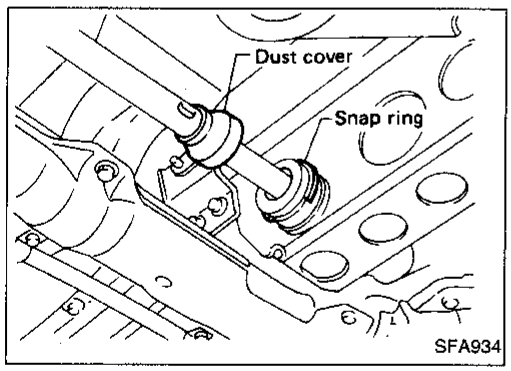

- Move dust cover, then detach snap ring from anchor arm.
- Pull out anchor arm rearward, then withdraw torsion bar spring rearward. — 2WD —
- Remove torque arm. — 2WD —

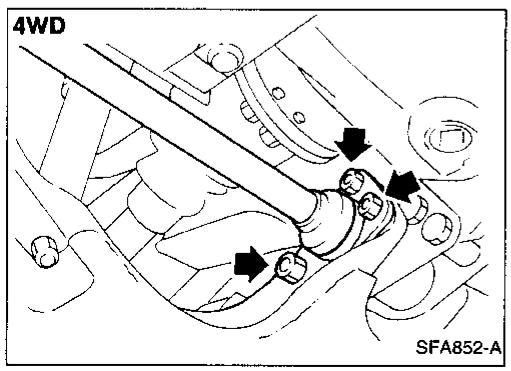

- Remove torque arm fixing nuts, then withdraw torsion bar spring forward with torque arm. — 4WD —

INSPECTION

- Check torsion bar spring for wear, twist, bend and other damage.
- Check serrations of each part for cracks, wear, twist and other damage.
- Check dust cover for cracks.

Torsion Bar Spring (Cont'd)

INSTALLATION AND ADJUSTMENT

Adjustment of anchor arm adjusting nut is in tightening direction only.
Do not adjust by loosening anchor arm adjusting nut.

1. Install torque arm to lower link. — 2WD —
2. Coat multi-purpose grease on the serration of torsion bar spring.

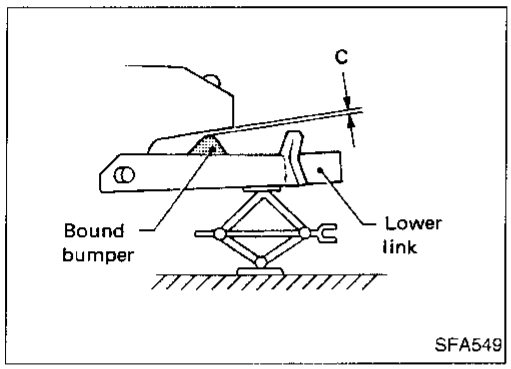

3. Place lower link in the position where bound bumper clearance "C" is 0.
   Clearance "C": 0 mm (0 in)

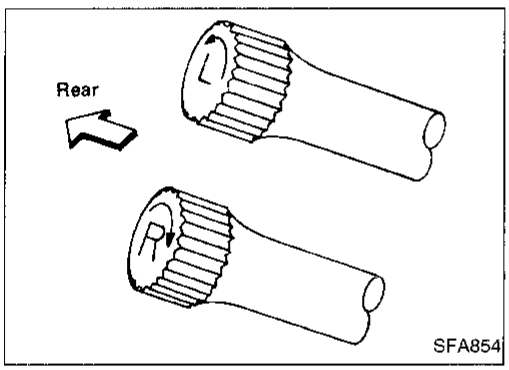

4. Install torsion bar spring. — 2WD —
- Install torsion bar spring with torque arm. — 4WD —

Be sure to install right and left torsion bar springs correctly.

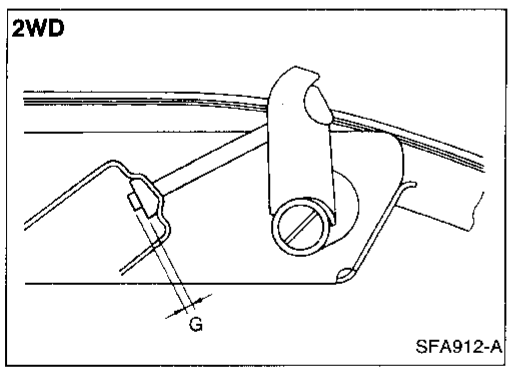

5. Set anchor arm.
   Standard length "G":
   2WD
   6 - 18 mm (0.24 - 0.71 in)
   4WD
   50 - 60 mm (1.97 - 2.36 in)

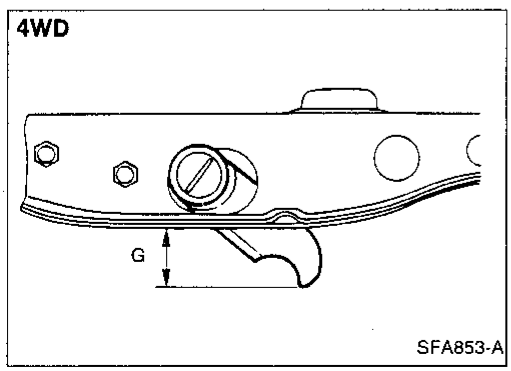

Torsion Bar Spring (Cont'd)

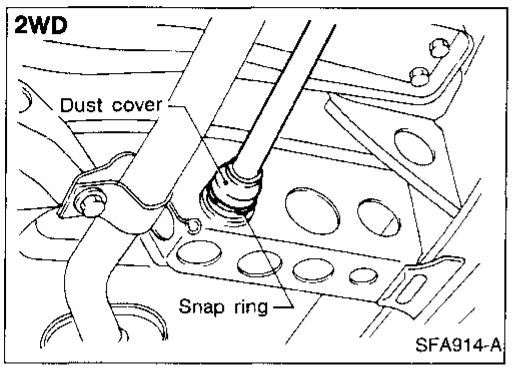

6. Install snap ring to anchor arm and dust cover.

— 2WD —

Make sure that the snap ring is properly installed on the anchor arm groove.

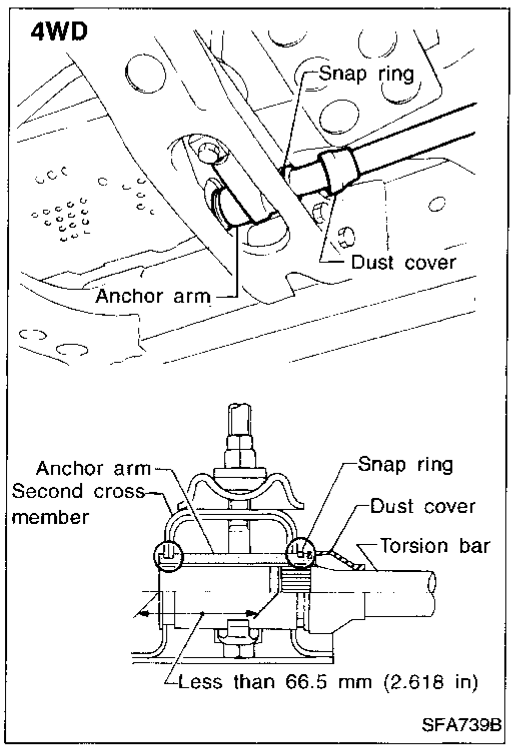

— 4WD —

Make sure that the snap ring and anchor arm are properly installed.

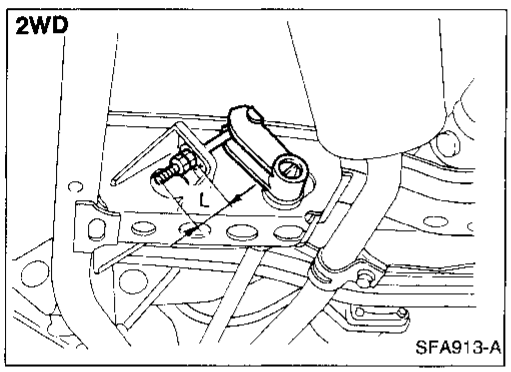

7. Tighten anchor arm adjusting nut to get L dimension.

Standard length "L":

2WD

49 mm (1.93 in)

4WD

77 mm (3.03 in)

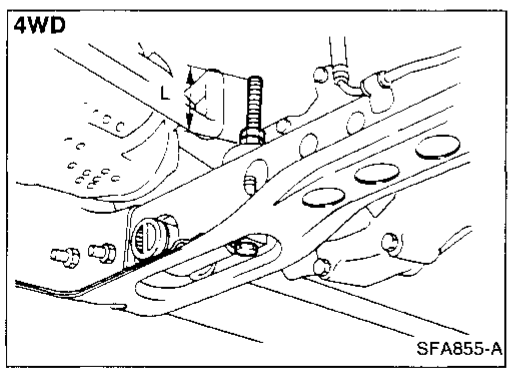

Torsion Bar Spring (Cont'd)

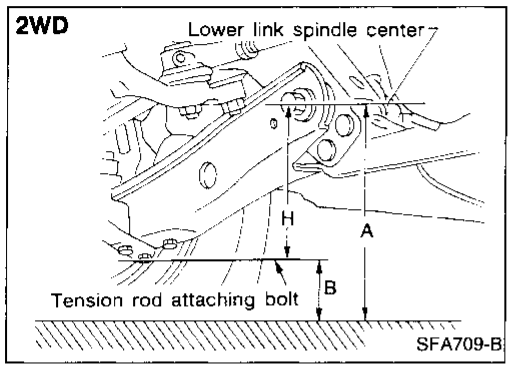

8. Bounce vehicle with tires on ground (Unladen) to eliminate friction of suspension.
9. Measure vehicle posture "H".
(1) Exercise the front suspension by bouncing the front of the vehicle 4 or 5 times to ensure that the vehicle is in a neutral height attitude.
(2) Measure vehicle posture ... Dimension "H".
H = A – B mm (in) "Unladen"
Refer to WHEEL ALIGNMENT (Unladen) in SDS, FA-46.

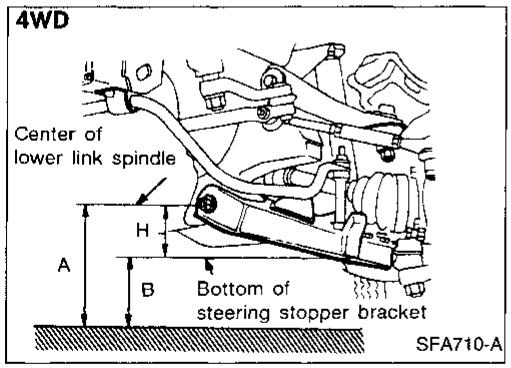

10. If height of the vehicle is not within allowable limit, adjust vehicle posture.
Refer to WHEEL ALIGNMENT (Unladen) in SDS, FA-46.
11. Check wheel alignment if necessary.
Refer to WHEEL ALIGNMENT (Unladen) in SDS,FA-46.

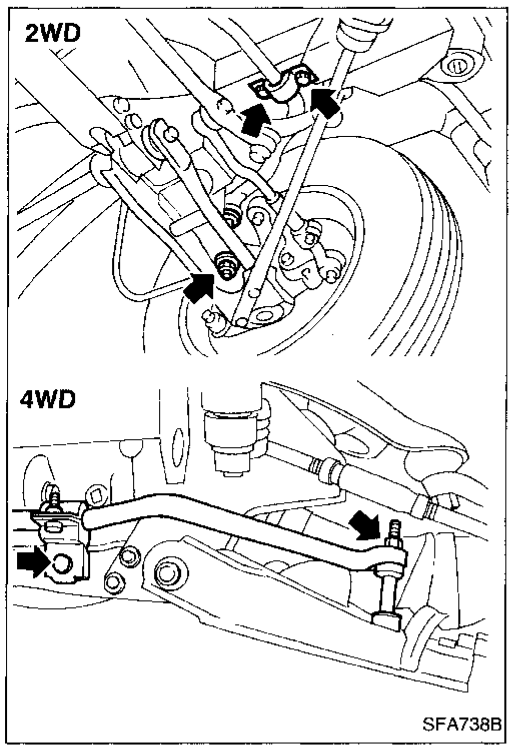

Stabilizer Bar

REMOVAL

- Remove stabilizer bar connecting bolts and clamp bolts.

INSPECTION

- Check stabilizer bar for twist and deformation.
  Replace if necessary.
- Check rubber bushing for cracks, wear and deterioration.
  Replace if necessary.

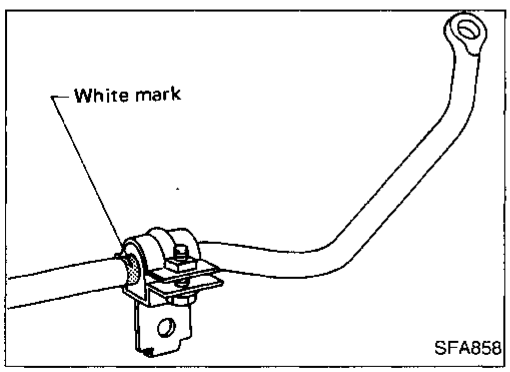

INSTALLATION

- Install bushing outside of white mark painted on stabilizer.

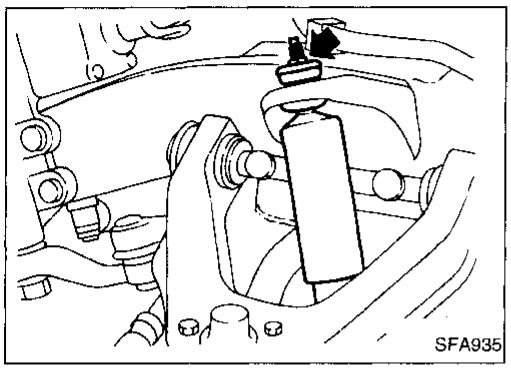

Upper Link

REMOVAL

- Remove shock absorber upper fixing nut.

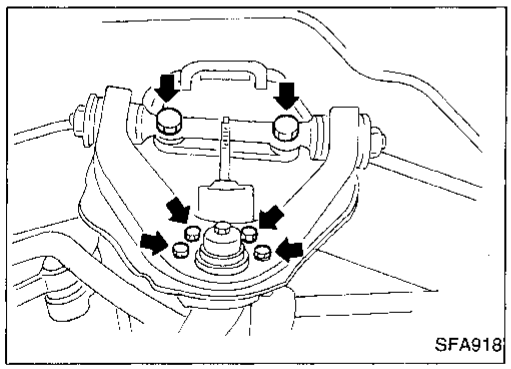

- Remove bolts fixing upper ball joint on upper link.

Support lower link with jack.

- Remove upper link spindle fixing bolts.

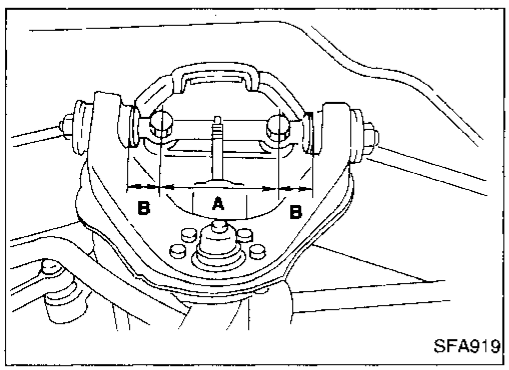

INSTALLATION

- Tighten upper link spindle with camber adjusting shims.
- After fitting, check dimensions "A" and "B".
  A: 110 mm (4.33 in)
  B: 32 mm (1.26 in)

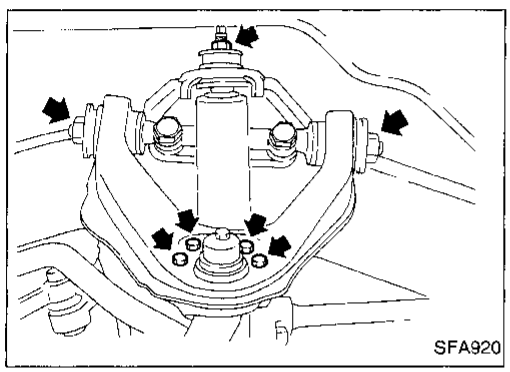

- Install upper ball joint on upper link.
- Install shock absorber upper fixing nut.
- Tighten upper link spindle lock nuts under unladen condition with tires on ground.
- After installing, check wheel alignment. Adjust if necessary. Refer to FA-8.

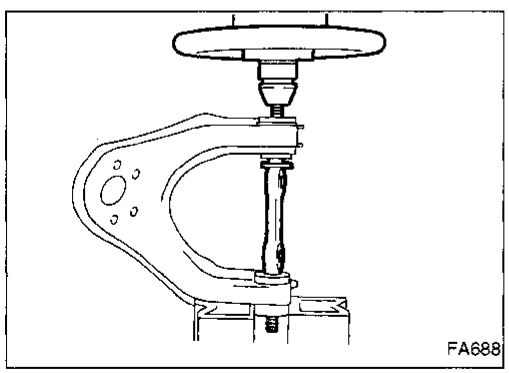

DISASSEMBLY

- Press out upper link spindle with bushings.

INSPECTION

- Check upper link spindle and rubber bushings for damage. Replace if necessary.
- Check upper link for deformation and cracks. Replace if necessary.

Upper Link (Cont'd)

ASSEMBLY

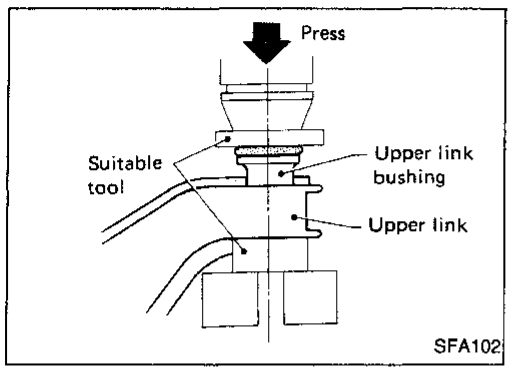

- Apply soapsuds to rubber bushing.
- Press upper link bushing.

Press bushing so that the flange of bushing securely contacts the end surface of the upper link collar.

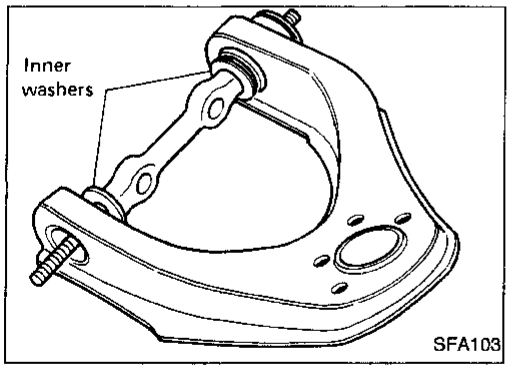

- Insert upper link spindle and inner washers.

Install inner washers with rounded edges facing inward.

- Press another bushing.

Press bushing so that the flange of bushing securely contacts the end surface of the upper link collar.

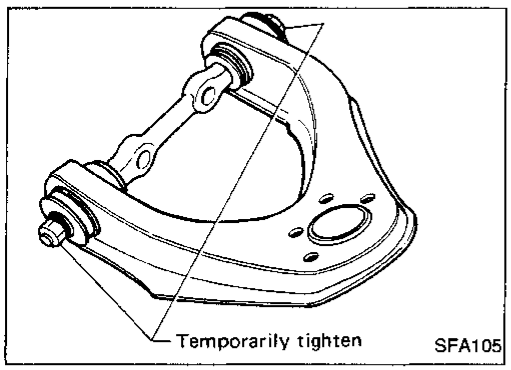

- Temporarily tighten nuts.

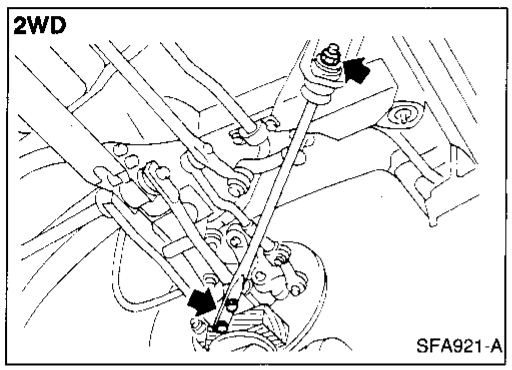

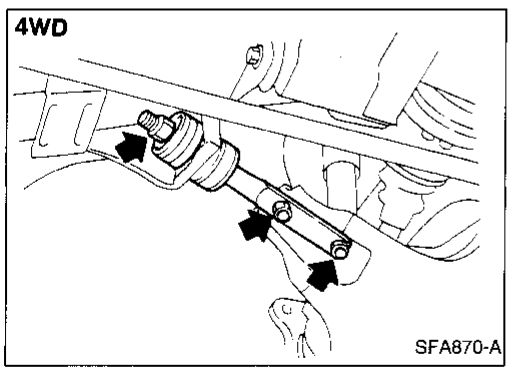

Tension Rod or Compression Rod

REMOVAL AND INSTALLATION

- Remove fixing nuts on lower link and frame.

Support lower link with jack.

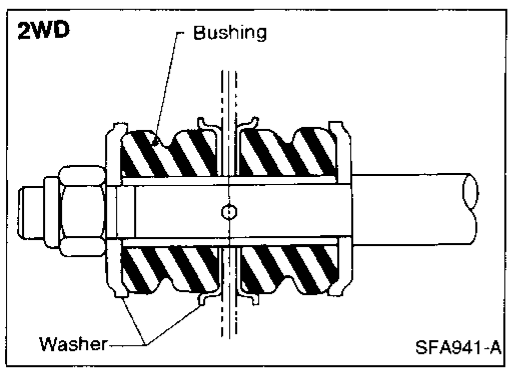

- Install tension rod. — 2WD —

Make sure that the bushings and washers are installed properly.

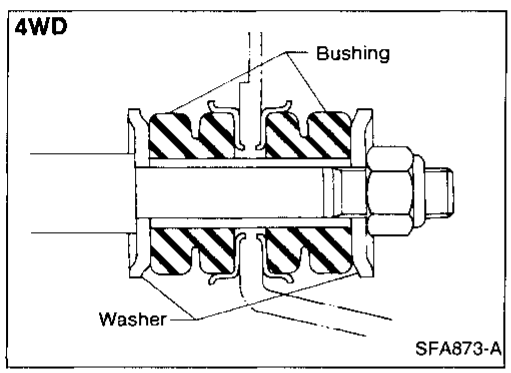

- Install compression rod. — 4WD —

Make sure that the bushings and washers are installed properly.

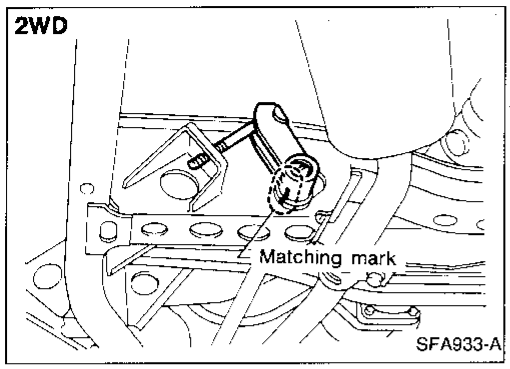

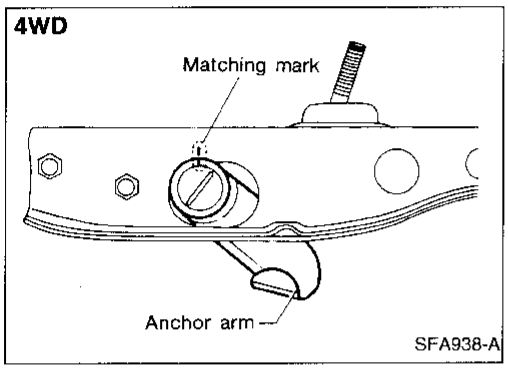

Lower Link

REMOVAL AND INSTALLATION

- Remove torsion bar spring. Refer to REMOVAL in Torsion Bar Spring, FA-36.

Make matching mark on anchor arm and crossmember when loosening adjusting nut until there is no tension on torsion bar spring.

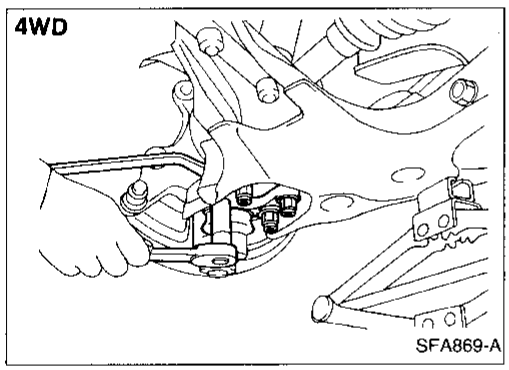

- Separate lower link ball joint from knuckle spindle. — 2WD —
  Refer to FRONT AXLE — Knuckle Spindle, FA-25.
- Separate lower ball joint from lower link. — 4WD —

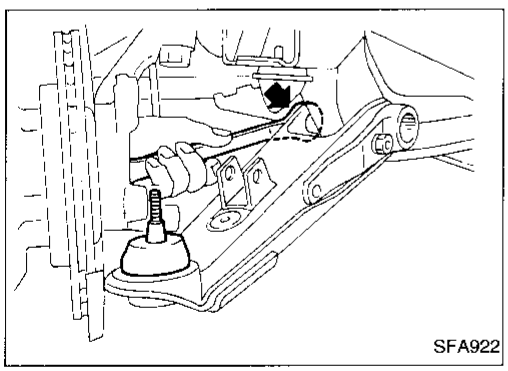

- Remove front lower link fixing nut.

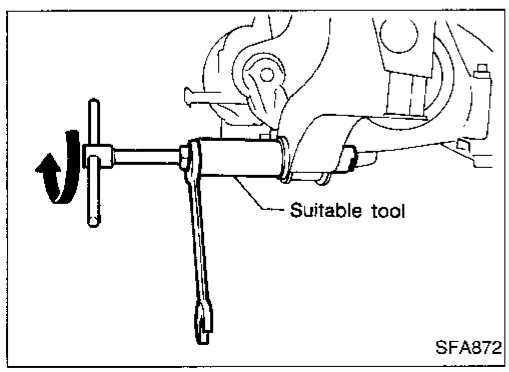

- Remove bushing of lower link spindle from frame with suitable tool.
- When installing, apply soapy water to bushing.
- After installing lower link, adjust wheel alignment and vehicle height. Refer to FA-8.

INSPECTION

Lower link and lower link spindle

- Check for deformation and cracks. Replace if necessary.

Lower link bushing

- Check for distortion and damage. Replace if necessary.

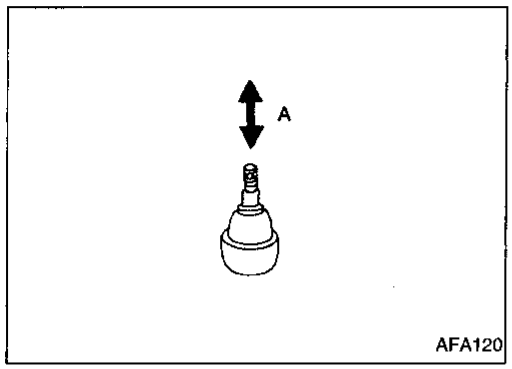

Upper Ball Joint and Lower Ball Joint

REMOVAL AND INSTALLATION

- Separate knuckle spindle from upper and lower links.
  Refer to FRONT AXLE — Knuckle Spindle, FA-25.

INSPECTION

- Check ball joint for vertical end play "A".
  Upper ball joint:
  0.1 - 1.4 mm (0.004 - 0.055 in)
  Lower ball joint:
  2WD
  0.1 - 1.3 mm (0.004 - 0.051 in)
  4WD
  0.7 mm (0.028 in) or less
  Replace ball joint if movement is beyond specifications.

- Check dust cover for damage.
  Replace dust cover and dust cover clamp if necessary.

General Specifications

TORSION BAR SPRING

Applied model	2WD	4WD
Spring diameter x length mm (in)	22.6 x 885 (0.890 x 34.84)	26.0 x 1,205 (1.024 x 47.44)
Spring constant N/mm (kg/mm, lb/in)	16.5 (1.68, 94.1)	25.7 (2.62, 146.7)

SHOCK ABSORBER

Applied model	2WD		4WD	
	Except Heavy duty	Heavy duty	U.S.A.	Canada
Shock absorber type	Non-adjustable			
Damping force [at 0.3 m (1.0 ft)/sec.] N (kg, lb)				
Expansion	579 - 794 (59 - 81, 130 - 179)	1,089 - 1,461 (111 - 149, 245 - 329)	1,599 - 2,128 (163 - 217, 359 - 478)	1,687 - 2,236 (172 - 228, 379 - 503)
Compression	216 - 333 (22 - 34, 49 - 75)	314 - 471 (32 - 48, 71 - 106)	559 - 814 (57 - 83, 126 - 183)	432 - 647 (44 - 66, 97 - 146)

STABILIZER BAR

Applied model	2WD	4WD
Stabilizer bar diameter mm (in)	23.0 (0.906)	26.0 (1.024)

TENSION ROD OR COMPRESSION ROD

Applied model	2WD	4WD
Rod diameter mm (in)	22.0 (0.866)	23.5 (0.925)

DRIVE SHAFT (4WD)

Drive shaft joint type	
Final drive side	TS82F
Wheel side	ZF100
Fixed joint axial end play limit mm (in)	1 (0.04)
Diameter mm (in)	
Wheel side (D_1)	29.0 (1.142)
Grease	
Quality	Nissan genuine grease or equivalent
Capacity g (oz)	
Final drive side	95 - 105 (3.35 - 3.70)
Wheel side	135 - 145 (4.76 - 5.11)
Boot length mm (in)	
Final drive side (L_1)	95 - 97 (3.74 - 3.82)
Wheel side (L_2)	96 - 98 (3.78 - 3.86)

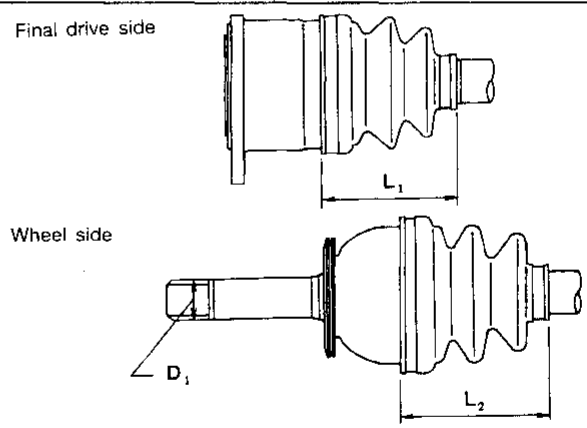

SFA877A

Inspection and Adjustment

WHEEL ALIGNMENT (Unladen*1)

2WD

			ALLOWABLE LIMIT	ADJUSTING RANGE
Camber	Degree minute (Decimal degree)	Minimum	–0°20′ (–0.33°)	–0°05′ (–0.08°)
		Nominal	0°25′ (0.42°)	0°25′ (0.42°)
		Maximum	1°10′ (1.17°)	0°55′ (0.92°)
		Left and right difference	45′ (0.75°) or less	
Caster	Degree minute (Decimal degree)	Minimum	–0°23′ (–0.38°)	–0°08′ (–0.13°)
		Nominal	0°22′ (0.37°)	0°22′ (0.37°)
		Maximum	1°07′ (1.12°)	0°52′ (0.87°)
		Left and right difference	45′ (0.75°) or less	
Kingpin inclination	Degree minute (Decimal degree)	Minimum	8°20′ (8.33°)	8°35′ (8.58°)
		Nominal	9°05′ (9.08°)	9°05′ (9.08°)
		Maximum	9°50′ (9.83°)	9°35′ (9.58°)
Total toe-in	Distance (A - B) mm (in)	Minimum	1 (0.04)	2 (0.08)
		Nominal	3 (0.12)	3 (0.12)
		Maximum	5 (0.20)	4 (0.16)
	Angle (left plus right) Degree minute (Decimal degree)	Minimum	5′ (0.08°)	10′ (0.17°)
		Nominal	15′ (0.25°)	15′ (0.25°)
		Maximum	25′ (0.42°)	20′ (0.33°)
Wheel turning angle	Full turn*2 Inside Degree minute (Decimal degree)	Minimum	34°00′ (34.00°)	36°00′ (36.00°)
		Nominal	38°00′ (38.00°)	38°00′ (38.00°)
		Maximum	38°00′ (38.00°)	38°00′ (38.00°)
	Full turn*2 Outside Degree minute (Decimal degree)	Minimum	31°00′ (31.00°)	33°00′ (33.00°)
		Nominal	35°00′ (35.00°)	35°00′ (35.00°)
		Maximum	35°00′ (35.00°)	35°00′ (35.00°)
Vehicle posture				
Lower arm pivot height (H)		mm (in)	108 - 118 (4.25 - 4.65)	111 - 115 (4.37 - 4.53)

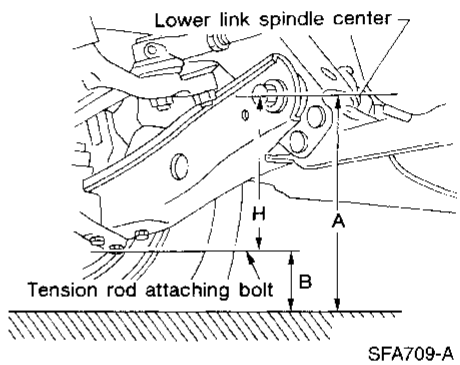

*1: Fuel, radiator coolant and engine oil full. Spare tire, jack, hand tools and mats in designated positions.

*2: On power steering models, wheel turning force (at circumference of steering wheel) of 98 to 147 N (10 to 15 kg, 22 to 33 lb) with engine idle.

Inspection and Adjustment (Cont'd)

4WD

			ALLOWABLE LIMIT	ADJUSTING RANGE
Camber	Degree minute (Decimal degree)	Minimum	−0°05′ (−0.08°)	0°10′ (0.17°)
		Nominal	0°40′ (0.67°)	0°40′ (0.67°)
		Maximum	1°25′ (1.42°)	1°10′ (1.17°)
		Left and right difference	45′ (0.75°) or less	
Caster	Degree minute (Decimal degree)	Minimum	0°33′ (0.55°)	0°48′ (0.80°)
		Nominal	1°18′ (1.30°)	1°18′ (1.30°)
		Maximum	2°03′ (2.05°)	1°48′ (1.80°)
		Left and right difference	45′ (0.75°) or less	
Kingpin inclination	Degree minute (Decimal degree)	Minimum	7°21′ (7.35°)	7°36′ (7.60°)
		Nominal	8°06′ (8.10°)	8°06′ (8.10°)
		Maximum	8°51′ (8.85°)	8°36′ (8.60°)
Total toe-in		Minimum	2 (0.08)	3 (0.12)
Distance (A - B)	mm (in)	Nominal	4 (0.16)	4 (0.16)
		Maximum	6 (0.24)	5 (0.20)
Angle (left plus right)	Degree minute (Decimal degree)	Minimum	9′ (0.15°)	14′ (0.23°)
		Nominal	19′ (0.32°)	19′ (0.32°)
		Maximum	29′ (0.48°)	24′ (0.40°)
Wheel turning angle — Full turn*2 — Inside	Degree minute (Decimal degree)	Minimum	31°00′ (31.00°)	33°00′ (33.00°)
		Nominal	35°00′ (35.00°)	35°00′ (35.00°)
		Maximum	35°00′ (35.00°)	35°00′ (35.00°)
Full turn*2 — Outside	Degree minute (Decimal degree)	Minimum	29°00′ (29.00°)	31°00′ (31.00°)
		Nominal	31°00′ (31.00°)	33°00′ (33.00°)
		Maximum	33°00′ (33.00°)	33°00′ (33.00°)
Vehicle posture				
Lower arm pivot height (H)		mm (in)	41 - 51 (1.61 - 2.01)	44 - 48 (1.73 - 1.89)

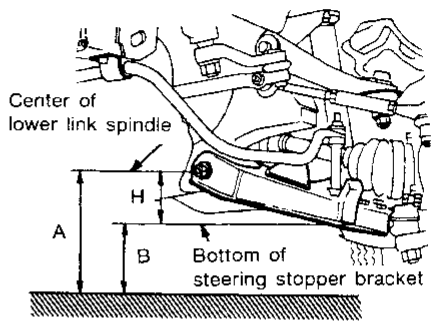

SFA710-B

*1: Fuel, radiator coolant and engine oil full. Spare tire, jack, hand tools and mats in designated positions.

*2: On power steering models, wheel turning force (at circumference of steering wheel) of 98 to 147 N (10 to 15 kg, 22 to 33 lb) with engine idle.

WHEEL BEARING

2WD

Wheel bearing axial end play mm (in)	0 (0)
Wheel bearing lock nut	
Tightening torque N·m (kg-m, ft-lb)	34 - 39 (3.5 - 4.0, 25 - 29)
Return angle degree	45° - 60°
Wheel bearing starting torque	
At wheel hub bolt With new grease seal N (kg, lb)	9.8 - 28.4 (1.0 - 2.9, 2.2 - 6.4)
With used grease seal N (kg, lb)	9.8 - 23.5 (1.0 - 2.4, 2.2 - 5.3)

4WD

Wheel bearing lock nut	
Tightening torque N·m (kg-m, ft-lb)	78 - 98 (8 - 10, 58 - 72)
Retightening torque after loosening wheel bearing lock nut N·m (kg-m, ft-lb)	0.5 - 1.5 (0.05 - 0.15, 0.4 - 1.1)
Axial end play mm (in)	0 (0)
Starting force at wheel hub bolt N (kg, lb)	A
Turning angle degree	15° - 30°
Starting force at wheel hub bolt N (kg, lb)	B
Wheel bearing preload at wheel hub bolt N (kg, lb)	
B – A	7.06 - 20.99 (0.72 - 2.14, 1.59 - 4.72)

WHEEL RUNOUT AVERAGE*

Wheel type	Aluminum	Steel		
		15 inches	14 inches	
			Painted	Plated
Radial runout limit mm (in)	0.3 (0.012)	0.8 (0.031)	0.5 (0.020)	0.6 (0.024)
Lateral runout limit mm (in)	0.3 (0.012)	0.8 (0.031)	0.8 (0.031)	0.8 (0.031)

* Wheel runout average = (Outside runout value + Inside runout value) x 0.5

DRIVE SHAFT (4WD)

Drive shaft axial end play mm (in)	0.45 (0.0177) or less

Drive shaft end snap ring

Thickness mm (in)	Part No.
1.1 (0.043)	39253-88G10
1.3 (0.051)	39253-88G11
1.5 (0.059)	39253-88G12
1.7 (0.067)	39253-88G13
1.9 (0.075)	39253-88G14
2.1 (0.083)	39253-88G15
2.3 (0.091)	39253-88G16

UPPER BALL JOINT

Vertical end play limit "A" mm (in)	0.1 - 1.4 (0.004 - 0.055)

LOWER BALL JOINT

Applied model	2WD	4WD
Vertical end play limit "A" mm (in)	0.1 - 1.3 (0.004 - 0.051)	0.7 (0.028) or less

REAR AXLE & REAR SUSPENSION

SECTION RA

CONTENTS

PRECAUTIONS AND PREPARATION 2
Precautions 2
Special Service Tools 2
Commercial Service Tools 2
REAR AXLE AND REAR SUSPENSION 3
ON-VEHICLE SERVICE 4
Rear Axle and Rear Suspension Parts 4
Rear Wheel Bearing 4
REAR AXLE 5
Components 5
Removal 5
Inspection 7
Installation 7
REAR SUSPENSION 9
Shock Absorber 10
Leaf Spring 10
SERVICE DATA AND SPECIFICATIONS (SDS) 12
General Specifications 12
Inspection and Adjustment 12

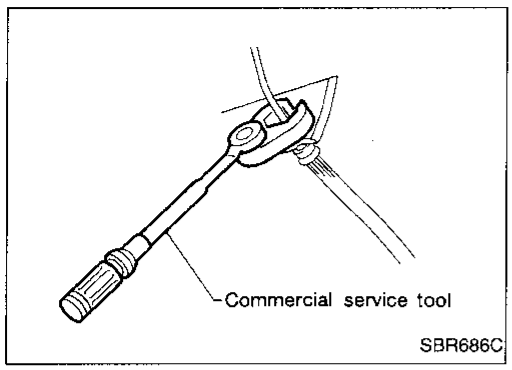

Precautions

- **When installing rubber parts, final tightening must be carried out under unladen condition* with tires on ground.**
  ***: Fuel, radiator coolant and engine oil full. Spare tire, jack, hand tools and mats in designated positions.**
- **Use flare nut wrench when removing or installing brake tubes.**
- **After installing removed suspension parts, check wheel alignment and adjust if necessary.**
- **Always torque brake lines when installing.**

Special Service Tools

The actual shapes of Kent-Moore tools may differ from those of special service tools illustrated here.

Tool number (Kent-Moore No.) Tool name	Description	
KV40101000 (J25604-01) Axle stand	NT159	Removing rear axle shaft
ST36230000 (J25840-A) Sliding hammer	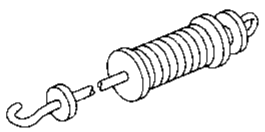 NT126	Removing rear axle shaft
ST38020000 (—) Bearing lock nut wrench	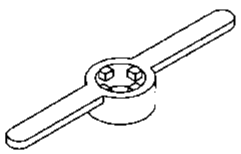 NT160	Removing wheel bearing lock nut
HT72480000 (J25852-B) Rear axle shaft bearing puller	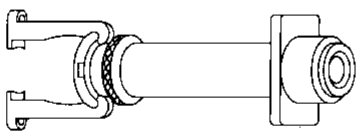 NT161	Removing wheel bearing
ST37840000 (—) Rear axle shaft guide	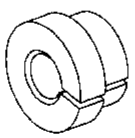 NT162	Installing rear axle shaft

Commercial Service Tools

Tool name	Description	
① Flare nut crowfoot ② Torque wrench	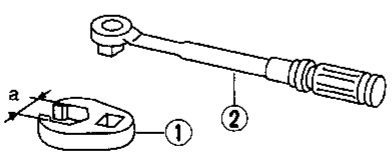 NT360	Removing and installing each brake piping **a: 10 mm (0.39 in)**
Rear axle oil seal drift	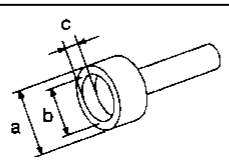 NT163	Installing oil seal **a: 74 mm (2.91 in) dia.** **b: 68 mm (2.68 in) dia.** **c: 10 mm (0.39 in)**

2WD

SEC. 380•430•431

When installing rubber parts, final tightening must be carried out under unladen condition* with tires on ground.
* Fuel, radiator coolant and engine oil full. Spare tire, jack, hand tools and mats in designated positions.

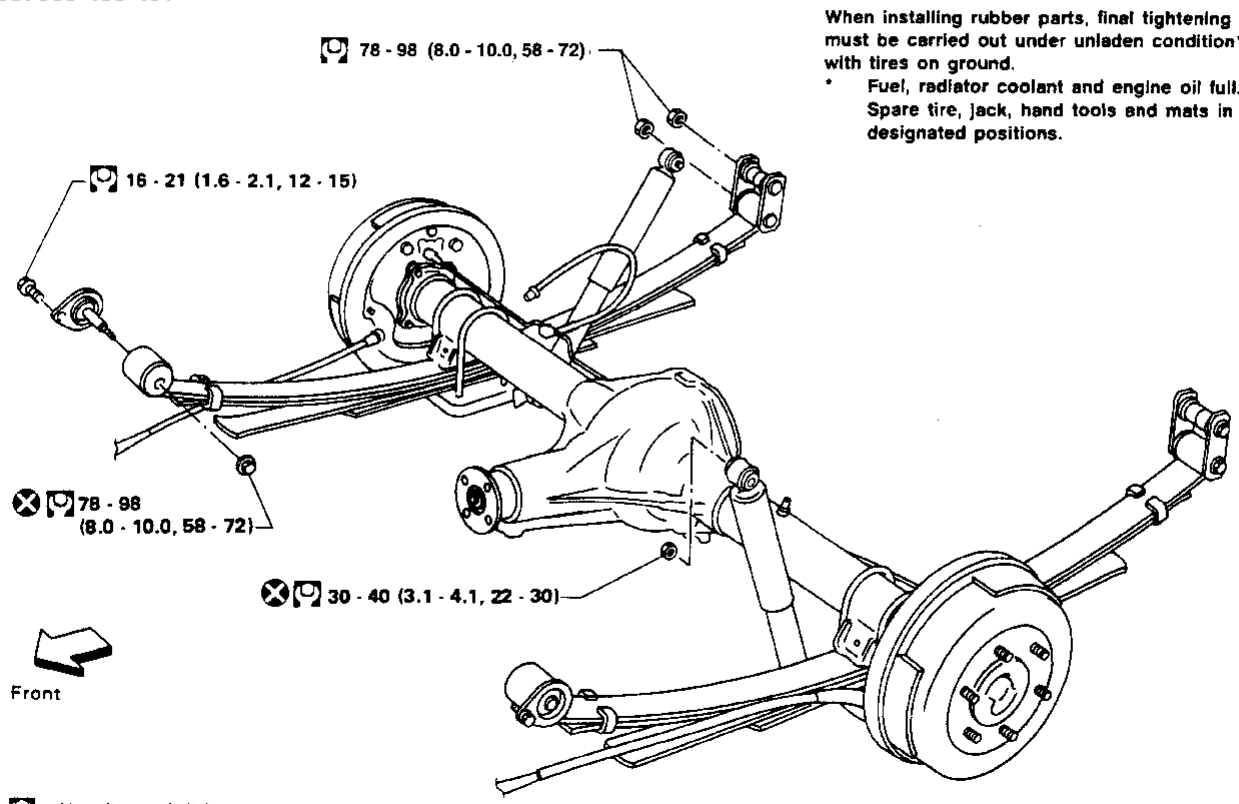

: N·m (kg-m, ft-lb)

ARA068

4WD

SEC. 380•430•431

When installing each rubber part, final tightening must be carried out under unladen condition* with tires on ground.
* Fuel, radiator coolant and engine oil full. Spare tire, jack, hand tools and mats in designated positions.

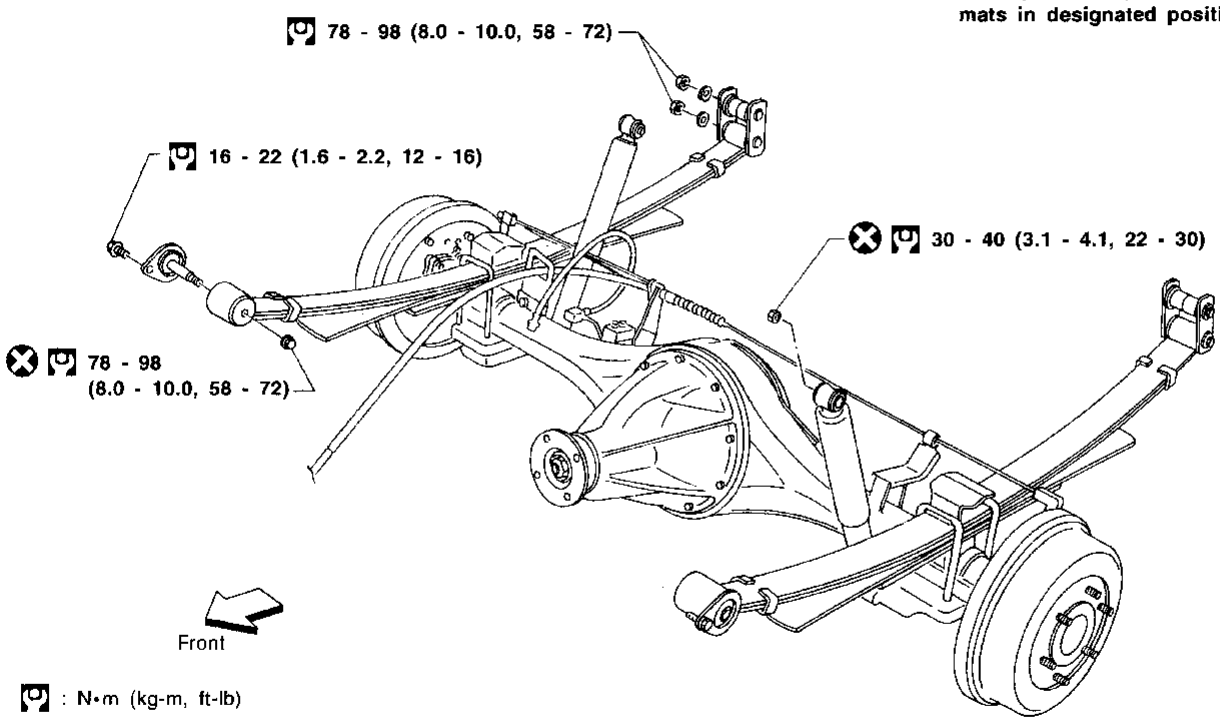

: N•m (kg-m, ft-lb)

SRA751A

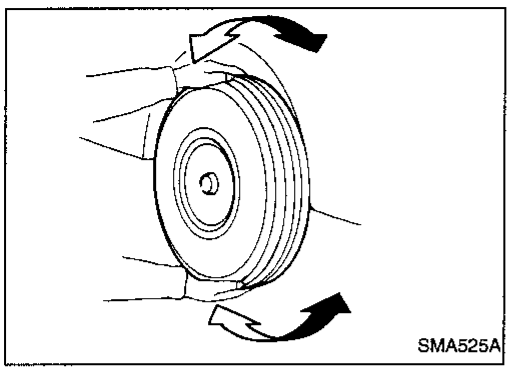

Rear Axle and Rear Suspension Parts

Check rear axle and rear suspension parts for excessive play, wear or damage.

- Shake each rear wheel to check for excessive play.

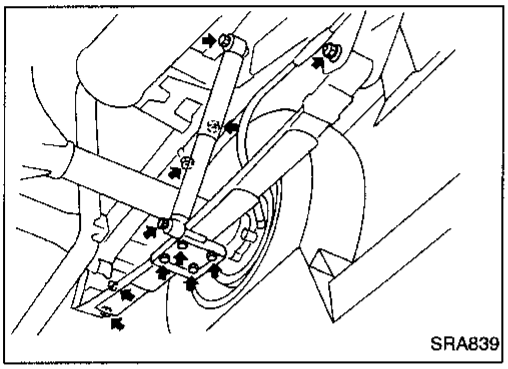

- Retighten all nuts and bolts to the specified torque.
  [O]: Refer to REAR SUSPENSION, RA-9.

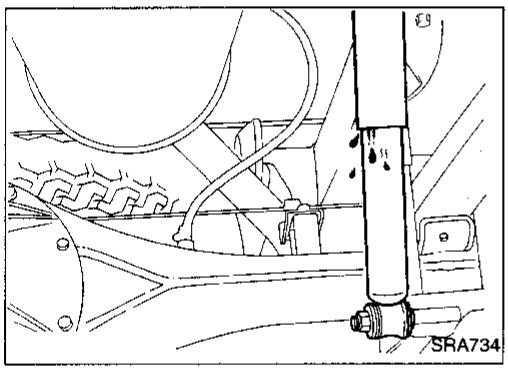

- Check shock absorber for oil leakage or other damage.
- Check shock absorber bushing for excessive wear or other damage.

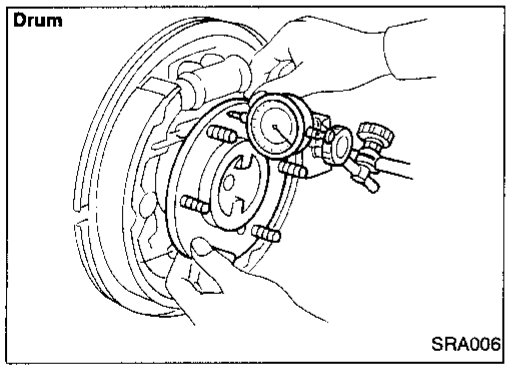

Rear Wheel Bearing

- Check that wheel bearings operate smoothly.
- Check axial end play.
  Axial end play:
  Refer to SDS, RA-12.

Components

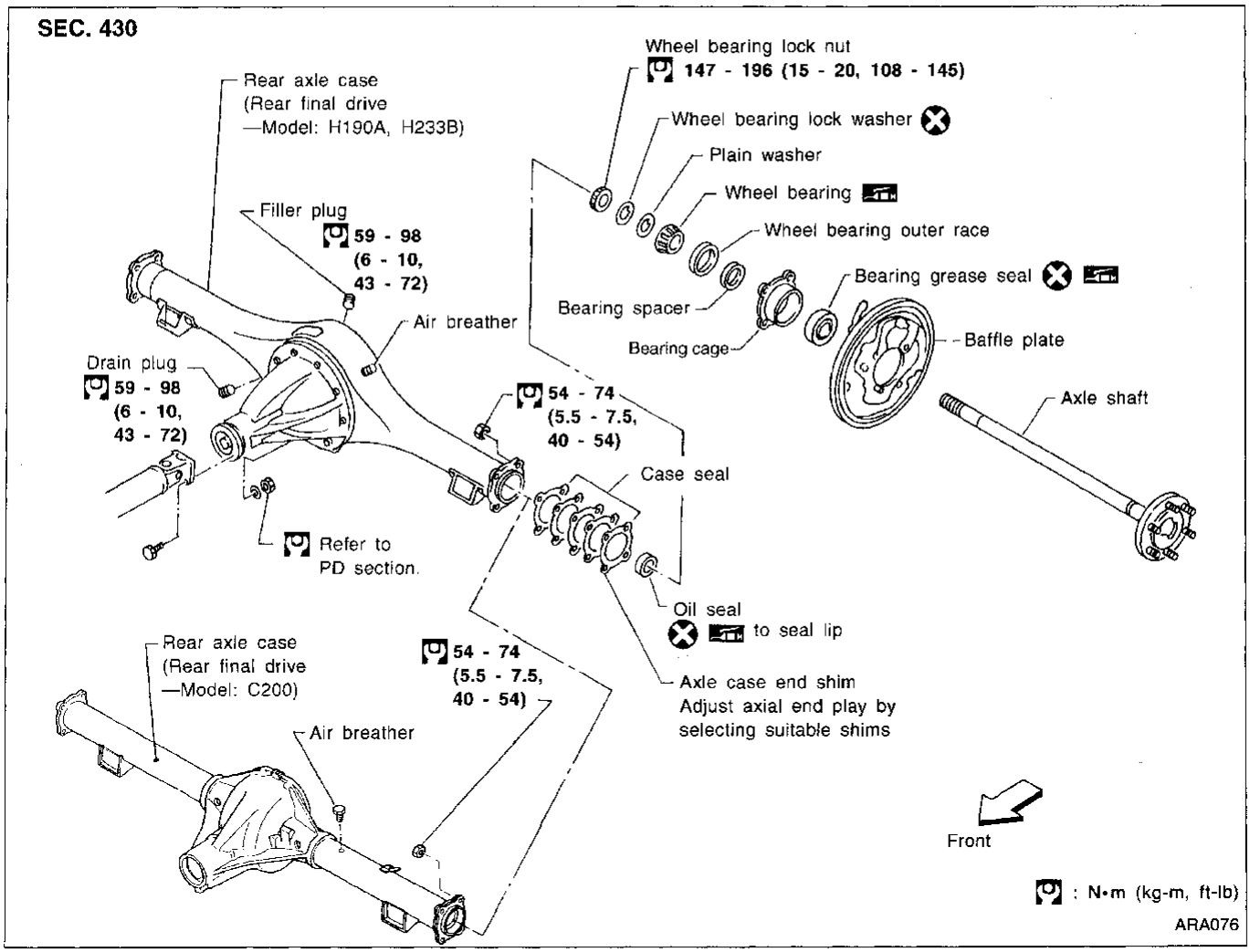

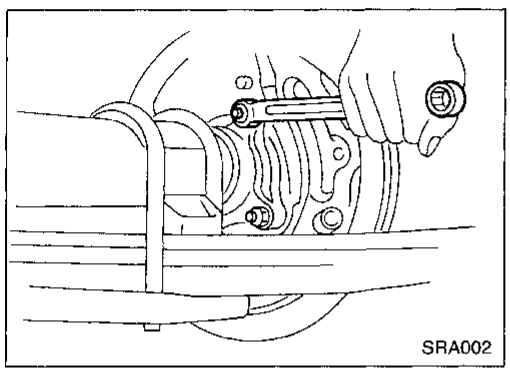

Removal

- Disconnect parking brake cable and brake tube.
- Remove nuts securing wheel bearing cage with baffle plate.

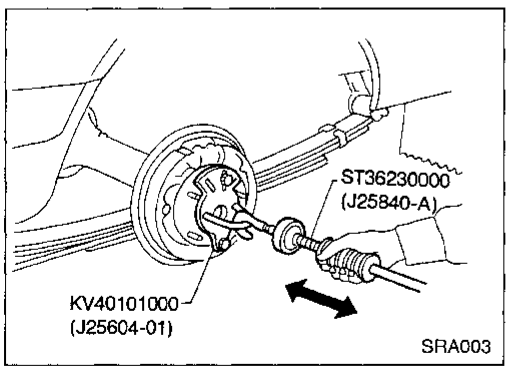

- Draw out axle shaft with Tool.

When drawing out axle shaft, be careful not to damage oil seal.

- Remove oil seal.

Do not reuse oil seal once it is removed.
Always install new one.

Removal (Cont'd)

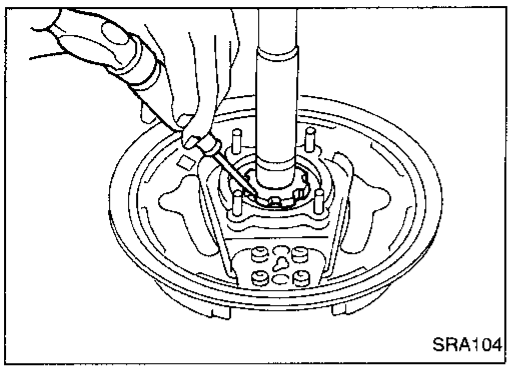

- Unbend lock washer with a screwdriver.

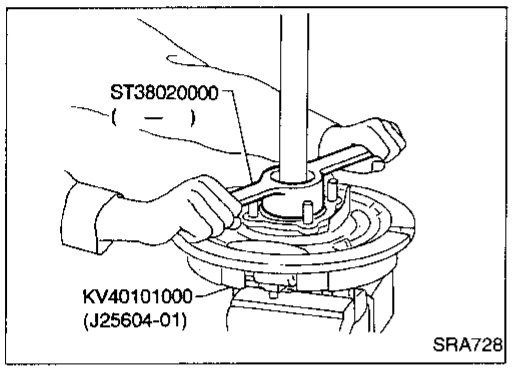

- Remove bearing lock nut with Tool.

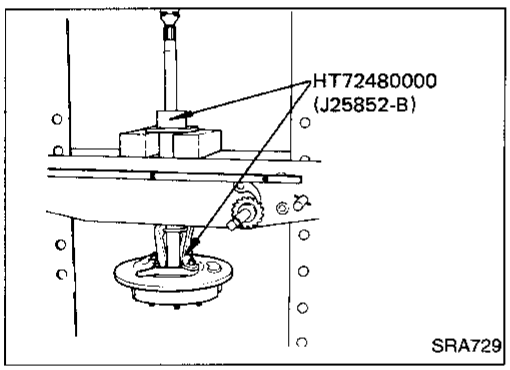

- Remove wheel bearing together with bearing cage and baffle plate from axle shaft.

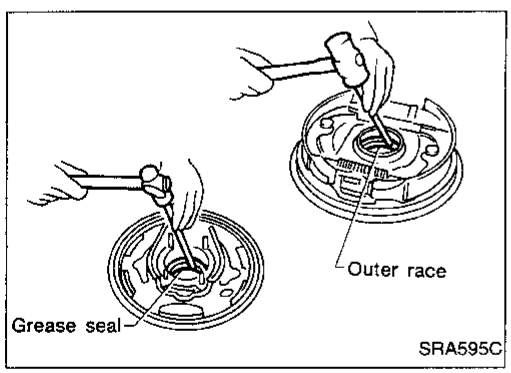

- Remove grease seal in bearing cage with suitable bar.
- Remove wheel bearing outer race with a brass drift.

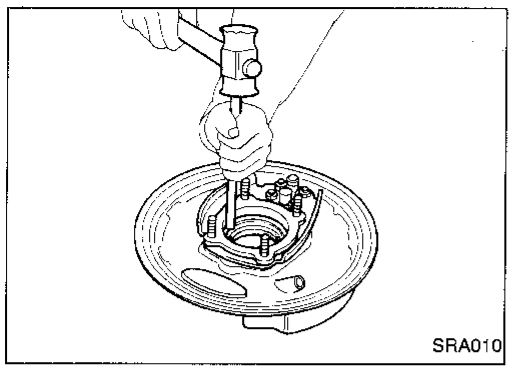

Inspection

AXLE SHAFT

- Check axle shaft for straightness, cracks, damage, wear or distortion. Replace if necessary.

WHEEL BEARING

- Make sure wheel bearing rolls freely and is free from noise, cracks, pitting or wear.

AXLE CASE

- Check axle case for yield, deformation or cracks. Replace if necessary.

Installation

- Install wheel bearing outer race with a brass drift.
- Install a new grease seal in bearing cage.

After installing new grease seal, coat sealing lip with multi-purpose grease.

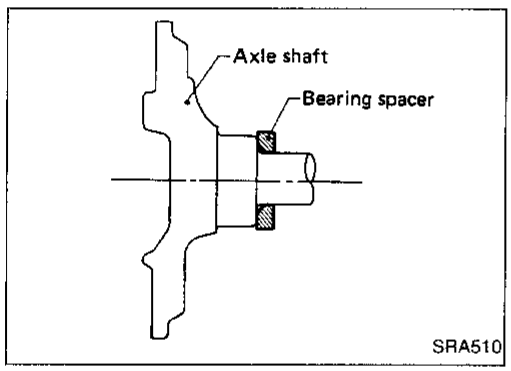

- Install bearing spacer with chamfer side facing axle shaft flange.

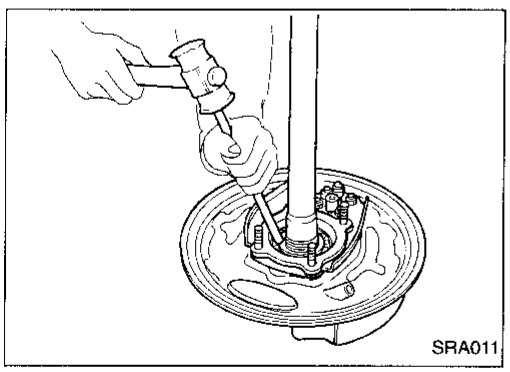

- Install wheel bearing inner race with a brass drift.
- Coat each bearing cone with multi-purpose grease.
  Specified amount of grease:
  8 - 12 g (0.28 - 0.42 oz)

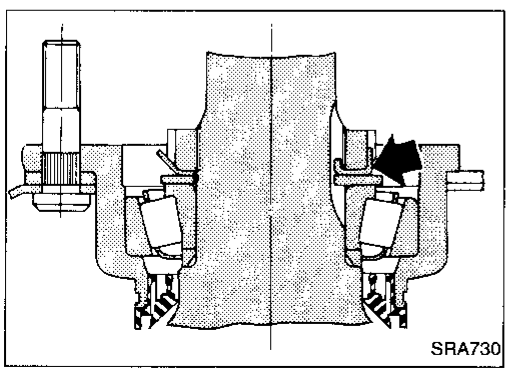

- Install plain washer and a new wheel bearing lock washer.
- Tighten wheel bearing lock nut.

Fit wheel bearing lock washer lip in wheel bearing lock nut groove correctly by tightening lock nut. Be sure to bend it up.

Installation (Cont'd)

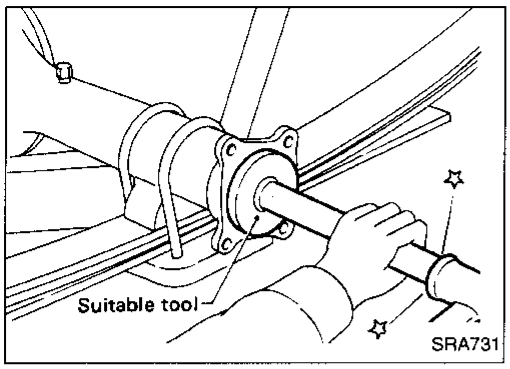

- Install a new oil seal with suitable tool.

After installing new oil seal, coat sealing lip with multi-purpose grease.

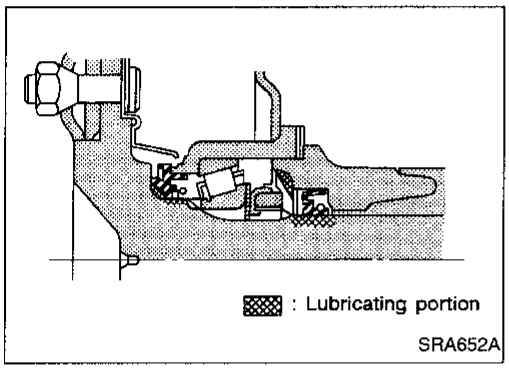

- **Apply recess of axle case end with multi-purpose grease.**
- **Apply gear oil to the spline of axle shaft. Coat seal surface of axle shaft with multi-purpose grease (as shown left).**

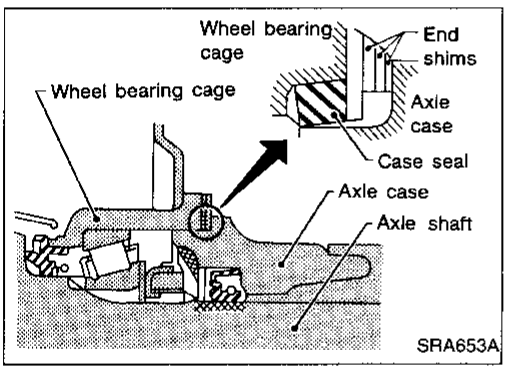

- Adjust axial end play.

a. Select end shims.
   Standard thickness: 1.5 mm (0.059 in)
   Axle case end shim: Refer to SDS, RA-12.

Do not insert end shims between case seal and bearing cage.

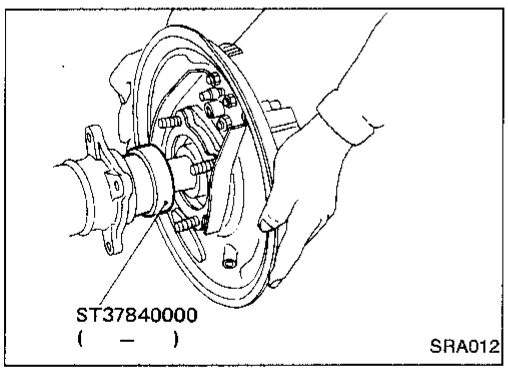

b. Insert axle shaft with Tool as a guide.

When inserting axle shaft, be careful not to damage oil seal.

c. Measure end play of axle shaft.
   Axial end play:
   Servicing one side axle
   0.02 - 0.15 mm (0.0008 - 0.0059 in)
   Servicing both side axles
   On first axle (right or left)
   0.30 - 0.90 mm (0.0118 - 0.0354 in)
   On second axle
   0.02 - 0.15 mm (0.0008 - 0.0059 in)

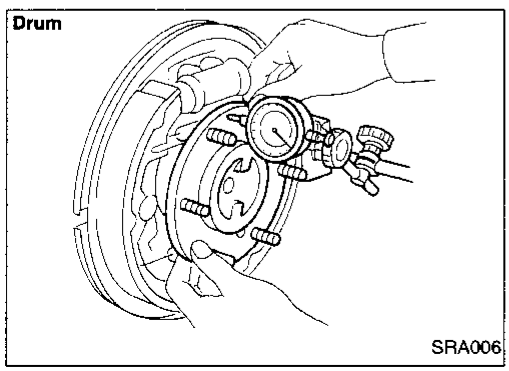

d. If axial end play is not within the specified limit, reselect axle case end shims.

While adjusting axial end play, be careful not to damage oil seal.

2WD

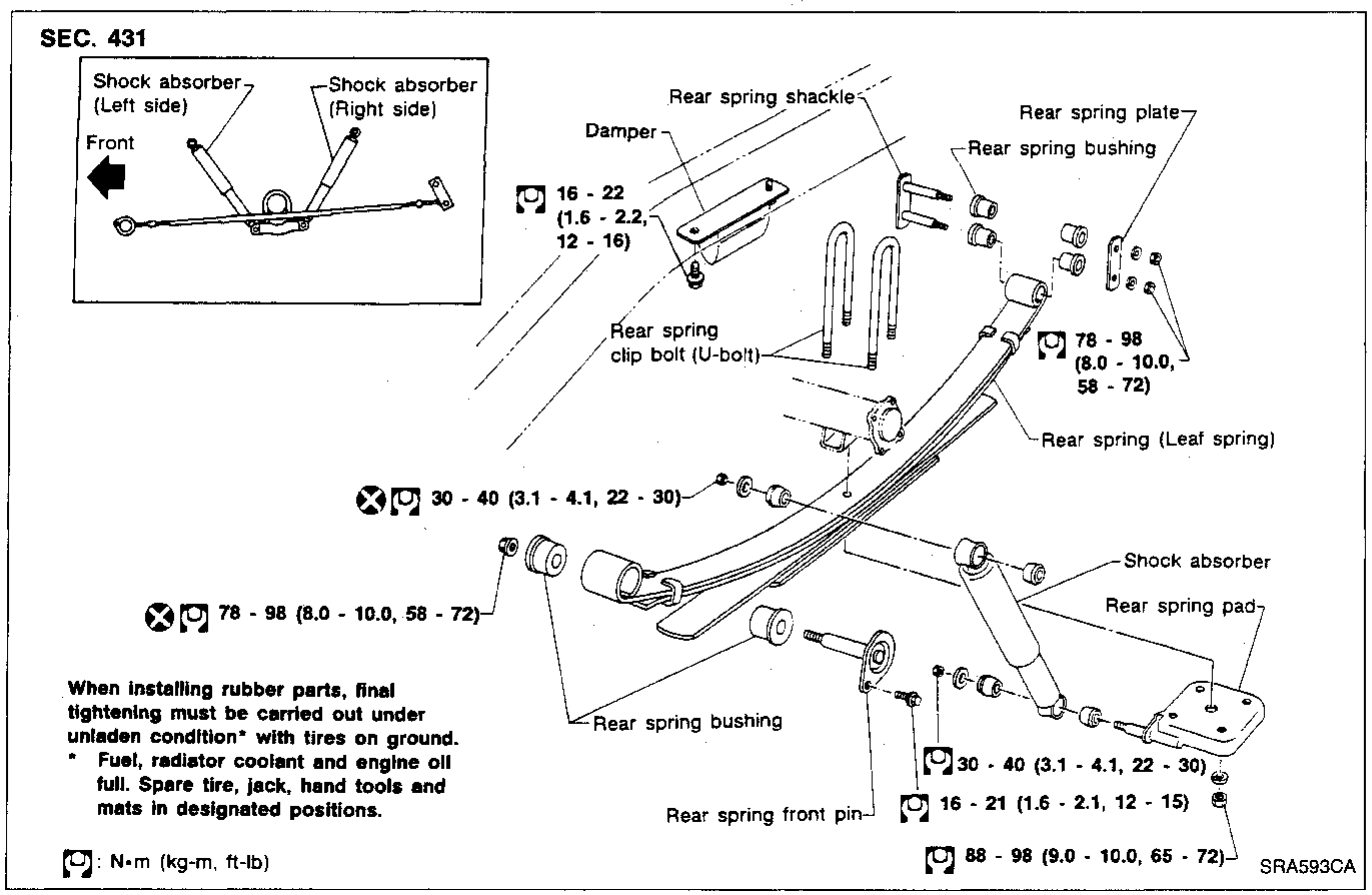
SEC. 431
Shock absorber (Left side)
Shock absorber (Right side)
Front
Rear spring shackle
Damper
Rear spring plate
Rear spring bushing
16 - 22 (1.6 - 2.2, 12 - 16)
Rear spring clip bolt (U-bolt)
78 - 98 (8.0 - 10.0, 58 - 72)
Rear spring (Leaf spring)
30 - 40 (3.1 - 4.1, 22 - 30)
Shock absorber
78 - 98 (8.0 - 10.0, 58 - 72)
Rear spring pad
When installing rubber parts, final tightening must be carried out under unladen condition* with tires on ground.
* Fuel, radiator coolant and engine oil full. Spare tire, jack, hand tools and mats in designated positions.
Rear spring bushing
30 - 40 (3.1 - 4.1, 22 - 30)
Rear spring front pin
16 - 21 (1.6 - 2.1, 12 - 15)
: N•m (kg-m, ft-lb)
88 - 98 (9.0 - 10.0, 65 - 72)
SRA593CA

4WD

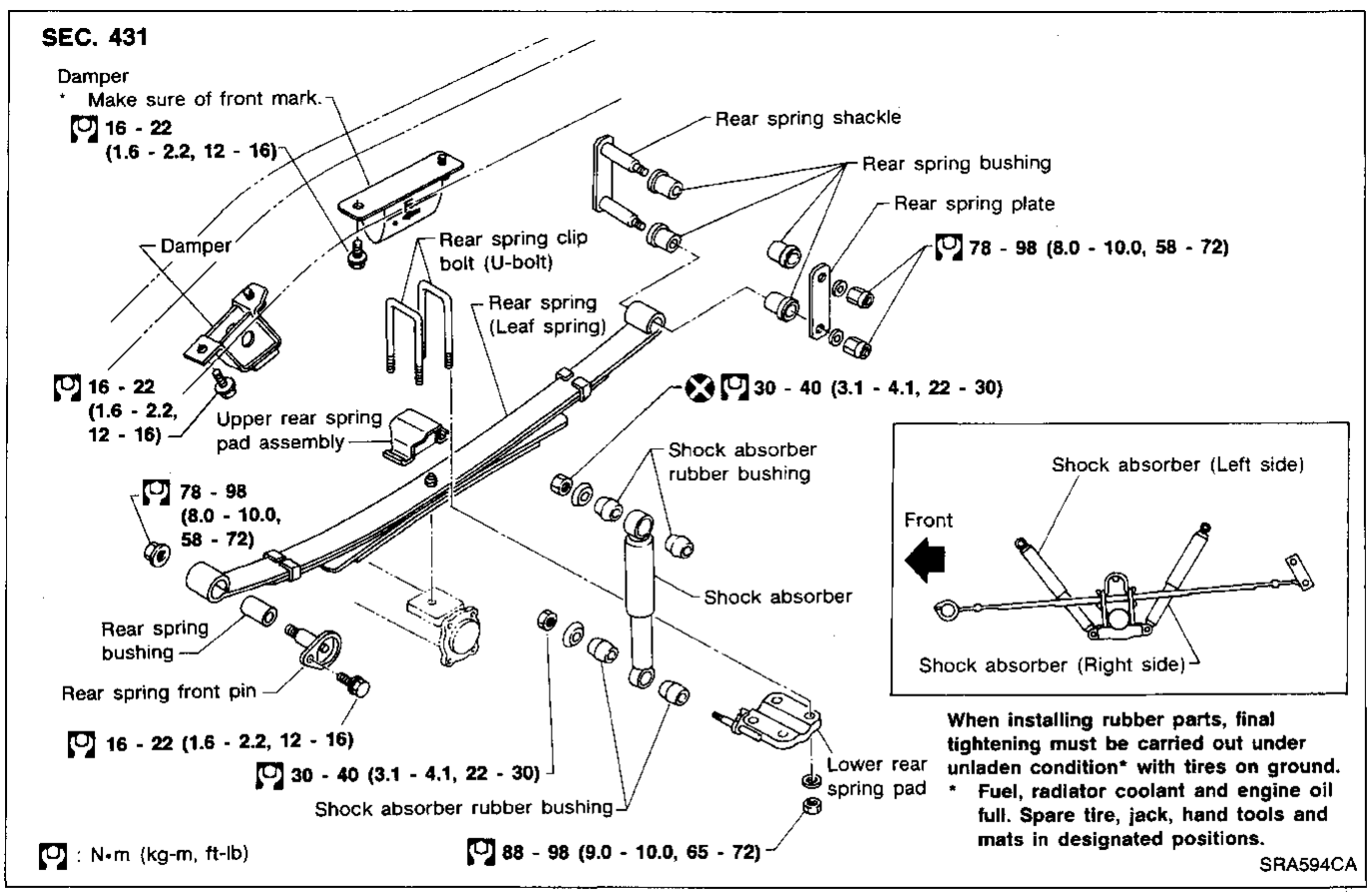
SEC. 431
Damper
* Make sure of front mark.
16 - 22 (1.6 - 2.2, 12 - 16)
Rear spring shackle
Rear spring bushing
Rear spring plate
Damper
Rear spring clip bolt (U-bolt)
78 - 98 (8.0 - 10.0, 58 - 72)
Rear spring (Leaf spring)
16 - 22 (1.6 - 2.2, 12 - 16)
Upper rear spring pad assembly
30 - 40 (3.1 - 4.1, 22 - 30)
Shock absorber rubber bushing
78 - 98 (8.0 - 10.0, 58 - 72)
Shock absorber (Left side)
Front
Shock absorber
Rear spring bushing
Shock absorber (Right side)
Rear spring front pin
16 - 22 (1.6 - 2.2, 12 - 16)
30 - 40 (3.1 - 4.1, 22 - 30)
Lower rear spring pad
Shock absorber rubber bushing
When installing rubber parts, final tightening must be carried out under unladen condition* with tires on ground.
* Fuel, radiator coolant and engine oil full. Spare tire, jack, hand tools and mats in designated positions.
: N•m (kg-m, ft-lb)
88 - 98 (9.0 - 10.0, 65 - 72)
SRA594CA

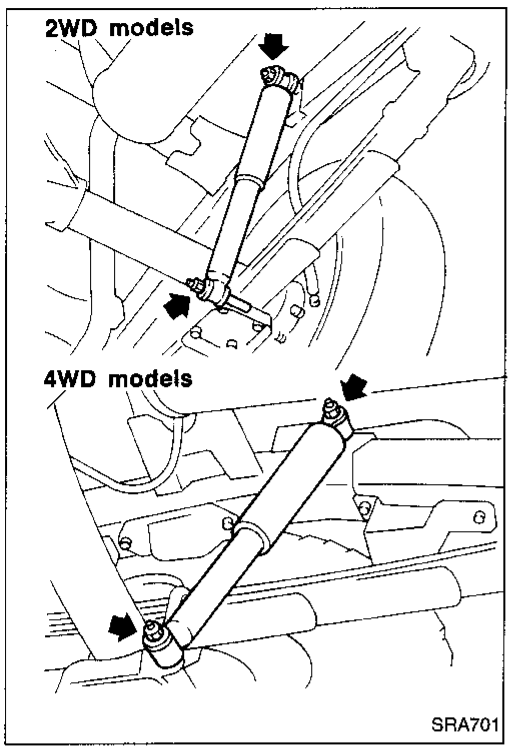

Shock Absorber

REMOVAL AND INSTALLATION

- Remove shock absorber by disconnecting upper and lower end.

INSPECTION

- If oil leakage, cracks or deformation occurs, replace shock absorber assembly.
- If rubber bushings are cracked or deformed, replace rubber bushings.

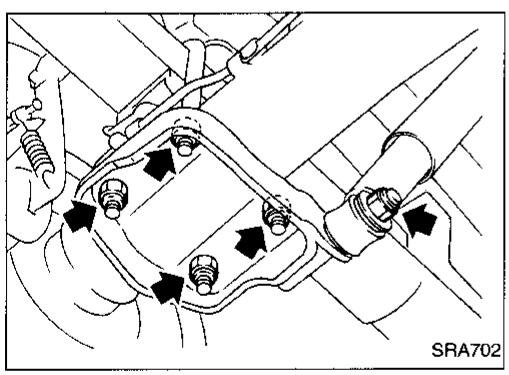

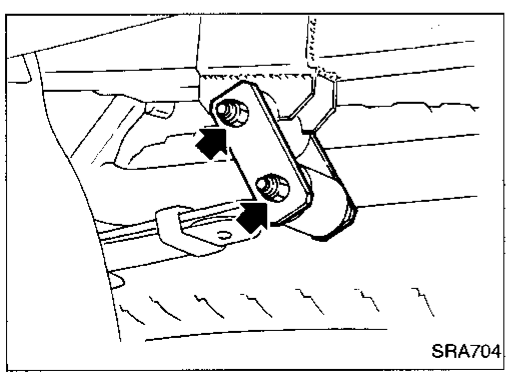

Leaf Spring

REMOVAL AND INSTALLATION

- Disconnect shock absorber lower end, and remove U-bolts.
- Disconnect spring shackle.

Leaf Spring (Cont'd)

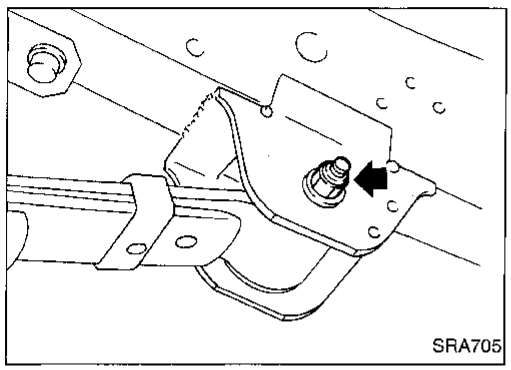

- Disconnect front pin.

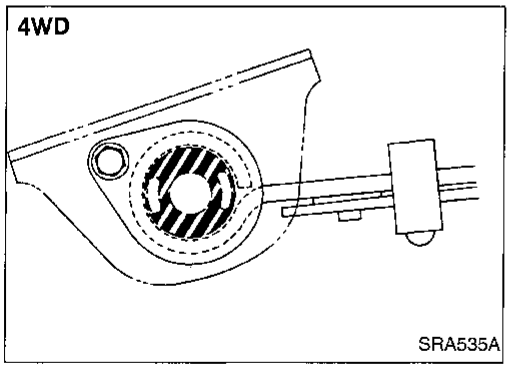

INSPECTION

- Check leaf spring for cracks. Replace if necessary.
- Check front bracket and pin, shackle, U-bolts and spring pad for wear, cracks, straightness or damaged threads. Replace if necessary.
- Check all bushings for deformation or cracks. Replace if necessary.
  [4WD: Rear spring front bushing]
  Make sure that front bushing is properly installed.

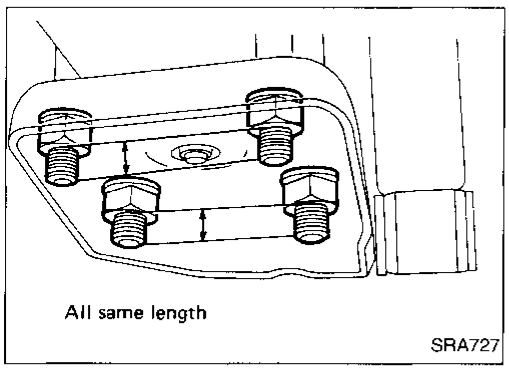

INSTALLATION

- Apply soapsuds to rubber bushing.
- Install spring shackle and front pin, and finger tighten the nuts.
- Install spring pad and nuts under leaf spring or axle case.
- Tighten U-bolt mounting nuts diagonally.

Tighten U-bolts so that the lengths of all U-bolts under spring pad are the same.

- Install shock absorber, and finger tighten the nuts.

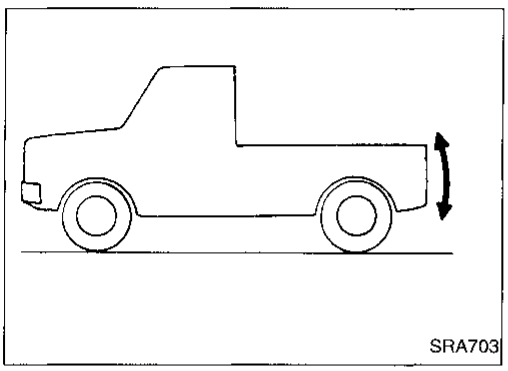

- Remove stands and bounce the vehicle to stabilize suspension. (Unladen)

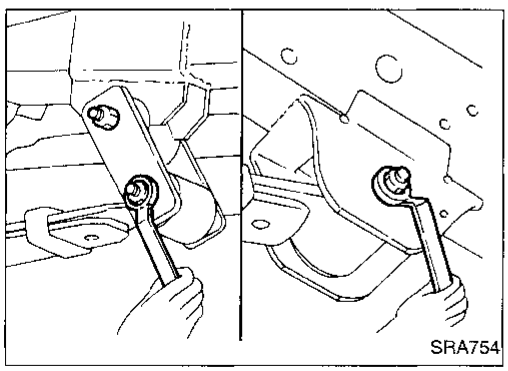

- Tighten spring shackle nuts, front pin nuts and shock absorber nuts.

When installing rubber parts, final tightening must be carried out under unladen condition* with tires on the ground.

* Fuel, radiator coolant and engine oil full. Spare tire, jack, hand tools and mats in designated positions.

General Specifications

LEAF SPRING AND SHOCK ABSORBER

Applied model	2WD				4WD
	U.S.A.	Canada			
		Regular Cab	King Cab	Option	
Leaf spring					
Spring length x width mm (in)	1,200 x 60 (47.24 x 2.36)				
Spring thickness - number of leaves mm (in)	7 (0.28) - 2 13 (0.51) - 1	7 (0.28) - 2 12 (0.47) - 2		7 (0.28) - 2 13 (0.51) - 1	7 (0.28) - 1 8 (0.31) - 1 12 (0.47) -1 13 (0.51) - 1
Free camber "S" mm (in)	171.0 (6.73)	183.0 (7.20)	164.5 (6.48)	171.0 (6.73)	106.0 (4.17)
Shock absorber					
Shock absorber type	Non-adjustable				
Maximum length mm (in)	508 (20.00)				528 (20.79)
Compression N (kg, lb)	157 - 275 (16 - 28, 35 - 62)				265 - 422 (27 - 43, 60 - 95)

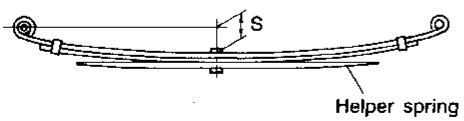

SRA657A

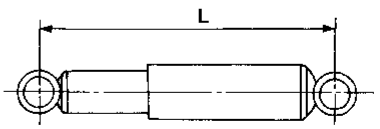

SRA658A

Inspection and Adjustment

WHEEL BEARING

Total end play mm (in)	0.02 - 0.15 (0.0008 - 0.0059)	
	Thickness mm (in)	Part number
Available rear axle case end shims	0.05 (0.0020)	43086-P0110
	0.07 (0.0028)	43087-P0110
	0.10 (0.0039)	43088-P0110
	0.15 (0.0059)	43086-B9500
	0.20 (0.0079)	43089-P0110
	0.50 (0.0197)	43090-P0110
	1.00 (0.0394)	43036-01G00

SECTION BR

CONTENTS

PRECAUTIONS AND PREPARATION 2
Supplemental Restraint System (SRS) "AIR BAG" 2
Commercial Service Tools 3
CHECK AND ADJUSTMENT 4
Checking Brake Fluid Level 4
Checking Brake Line 4
Changing Brake Fluid 4
AIR BLEEDING 5
Bleeding Procedure 5
BRAKE HYDRAULIC LINE 6
CONTROL VALVE 8
Proportioning Valve (4WD) 8
Load Sensing Valve (2WD) 9
BRAKE PEDAL AND BRACKET 11
Adjustment 12
MASTER CYLINDER 13
BRAKE BOOSTER 16
On-vehicle Service 16
VACUUM HOSE 18
FRONT DISC BRAKE 19
Pad Replacement 19
REAR DRUM BRAKE 24
PARKING BRAKE CONTROL 28
Adjustment 29
REAR WHEEL ANTI-LOCK BRAKE SYSTEM 30
Purpose 30
Operation 30
System Description 30
System Components 31
Hydraulic Circuit 31
Removal and Installation 32
TROUBLE DIAGNOSES 33
How to Perform Trouble Diagnoses for Quick and Accurate Repair 33
Symptom Chart 34
Preliminary Check 1 35
Self-diagnosis 36
Component Parts and Harness Connector Location 37
Circuit Diagram 38
Wiring Diagram –ABS– 39
Diagnostic Procedures 41
Electrical Components Inspection 49
SERVICE DATA AND SPECIFICATIONS (SDS) 50
General Specifications 50
Inspection and Adjustment 51

When you read wiring diagrams:
- **Read GI section, "HOW TO READ WIRING DIAGRAMS".**
- **See EL section, "POWER SUPPLY ROUTING" for power distribution circuit.**

When you perform trouble diagnoses, read GI section, "HOW TO FOLLOW FLOW CHART IN TROUBLE DIAGNOSES" and "HOW TO PERFORM EFFICIENT DIAGNOSIS FOR AN ELECTRICAL INCIDENT".

Supplemental Restraint System (SRS) "AIR BAG"

The Supplemental Restraint System "Air Bag", used along with a seat belt, helps to reduce the risk or severity of injury to the driver in a frontal collision. The Supplemental Restraint System consists of an air bag module (located in the center of the steering wheel), a diagnosis sensor unit, warning lamp, wiring harness, a crash zone sensor (4WD models) and spiral cable. Information necessary to service the system safely is included in the **RS section** of this Service Manual.

WARNING:

- **To avoid rendering the SRS inoperative, which could increase the risk of personal injury or death in the event of a collision which would result in air bag inflation, all maintenance must be performed by an authorized NISSAN dealer.**
- **Improper maintenance, including incorrect removal and installation of the SRS, can lead to personal injury caused by unintentional activation of the system.**
- **Do not use electrical test equipment on any circuit related to the SRS unless instructed to in this Service Manual. SRS wiring harnesses are covered with yellow insulation either just before the harness connectors or for the complete harness, for easy identification.**

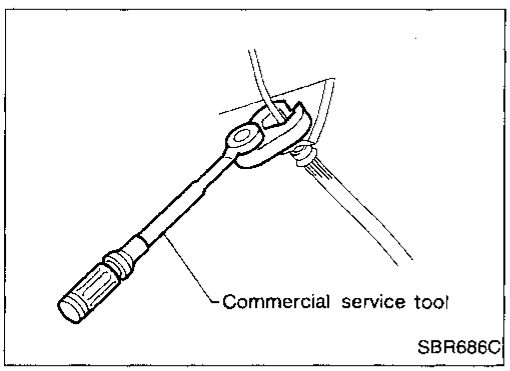

Brake System

- **Use brake fluid DOT 3.**
- **Never reuse drained brake fluid.**
- **Be careful not to splash brake fluid on painted areas; it may cause paint damage. If brake fluid is splashed on painted areas, wash it away with water immediately.**
- **To clean master cylinder parts, disc brake caliper parts or wheel cylinder parts, use clean brake fluid.**
- **Never use mineral oils such as gasoline or kerosene. They will ruin rubber parts of the hydraulic system.**
- **Use flare nut wrench when removing and installing brake tubes.**
- **Always torque brake lines when installing.**

WARNING:

- **Clean brakes with a vacuum dust collector to minimize the hazard of airborne materials.**

Commercial Service Tools

Tool name	Description	
① Flare nut crowfoot ② Torque wrench	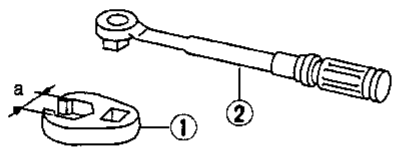 NT360	Removing and installing each brake piping **a: 10 mm (0.39 in)**
Brake fluid pressure gauge	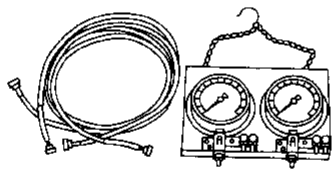 NT151	Measuring brake fluid pressure

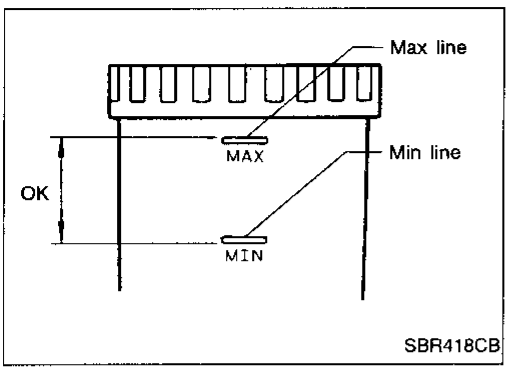

Checking Brake Fluid Level

- Check fluid level in reservoir tank. It should be between Max and Min lines on reservoir tank.
- If fluid level is extremely low, check brake system for leaks.
- If the brake warning lamp comes on, check brake fluid level switch and parking brake switch.

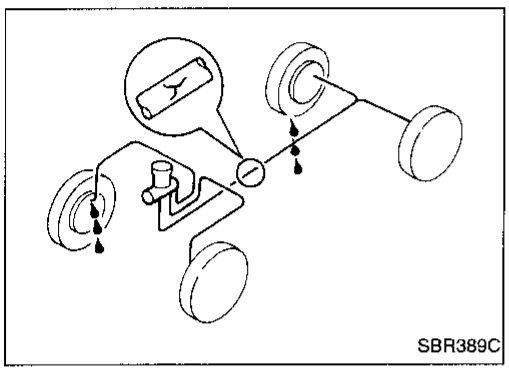

Checking Brake Line

CAUTION:
If leakage occurs around joints, retighten or, if necessary, replace damaged parts.

1. Check brake lines (tubes and hoses) for cracks, deterioration and other damage. Replace any damaged parts.
2. Check for oil leakage by fully depressing brake pedal while engine is running.

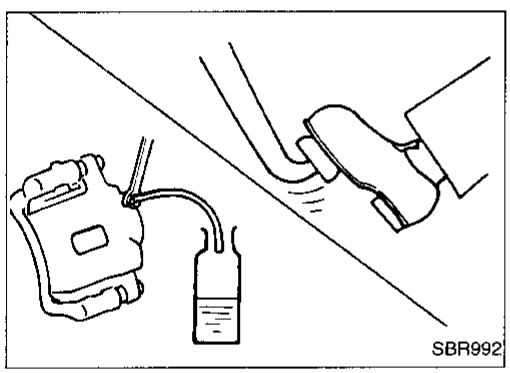

Changing Brake Fluid

CAUTION:

- **Refill with new brake fluid DOT 3.**
- **Always keep fluid level higher than minimum line on reservoir tank.**
- **Never reuse drained brake fluid.**
- **Be careful not to splash brake fluid on painted areas; it may cause paint damage. If brake fluid is splashed on painted areas, wash it away with water immediately.**

1. Clean inside of reservoir tank, and refill with new brake fluid.
2. Connect a vinyl tube to each air bleeder valve.
3. Drain brake fluid from each air bleeder valve by depressing brake pedal.
4. Refill until brake fluid comes out of each air bleeder valve. Use same procedure as in bleeding hydraulic system to refill brake fluid. Refer to "Bleeding Procedure", BR-5.

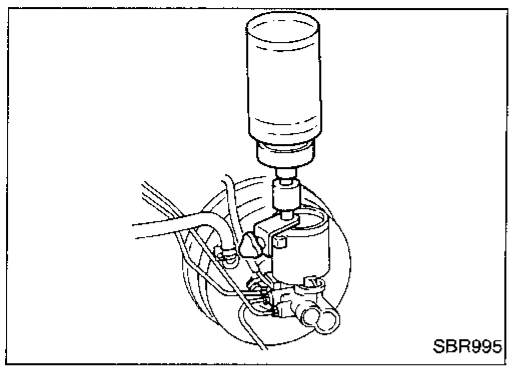

Bleeding Procedure

CAUTION:

- **Carefully monitor brake fluid level at master cylinder during bleeding operation.**
- **If master cylinder is suspected to have air inside, bleed air from master cylinder first. Refer to "Installation", "MASTER CYLINDER", BR-15.**
- **Fill reservoir with new brake fluid DOT 3. Make sure it is full at all times while bleeding air out of system.**
- **Place a container under master cylinder to avoid spillage of brake fluid.**
- **Rear Wheel Anti-Lock Brake system:**
  Before bleeding air, be sure to turn ignition switch OFF and disconnect battery ground cable and actuator connector.
- Bleed air in the following order.
  a. LSV air bleeder (Models equipped with LSV)
  b. Left rear brake
  c. Right rear brake
  d. Left front brake
  e. Right front brake
  f. ABS actuator

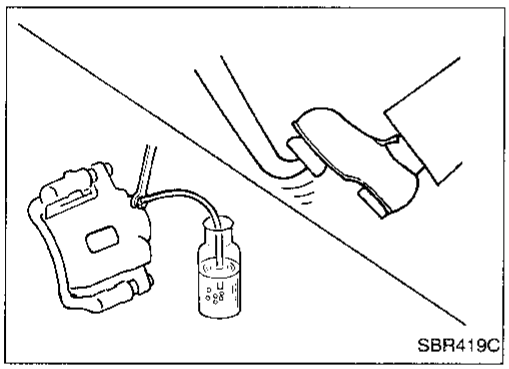

1. Connect a transparent vinyl tube to air bleeder valve.
2. Fully depress brake pedal several times.
3. With brake pedal depressed, open air bleeder valve to release air.
4. Close air bleeder valve.
5. Release brake pedal slowly.
6. Repeat steps 2 through 5 until clear brake fluid comes out of air bleeder valve.
7. Tighten air bleeder to the specified torque.
   : 7 - 9 N·m (0.7 - 0.9 kg-m, 61 - 78 in-lb)

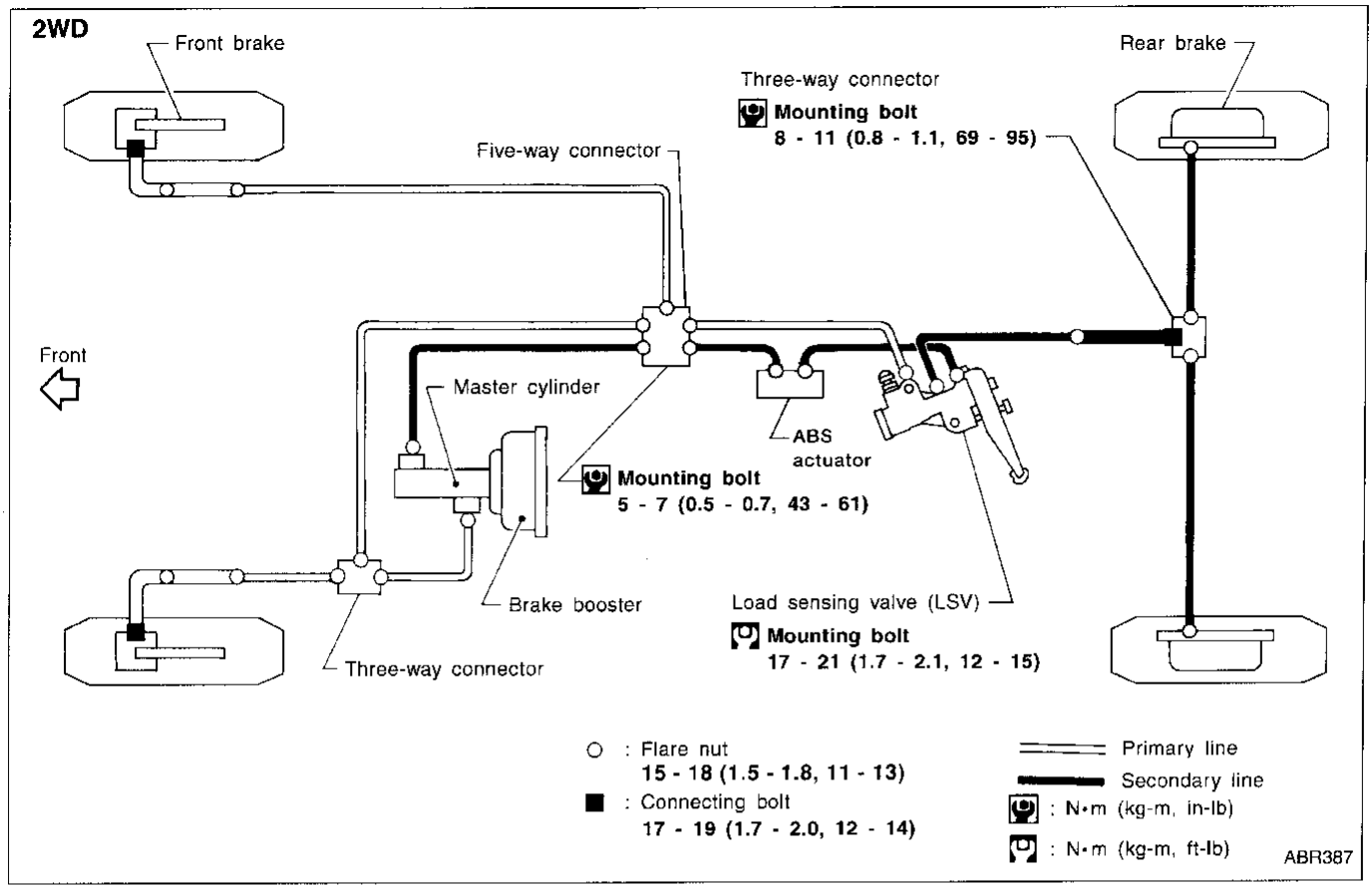
2WD
Front brake
Rear brake
Three-way connector
Mounting bolt
8 - 11 (0.8 - 1.1, 69 - 95)
Five-way connector
Front
Master cylinder
ABS actuator
Mounting bolt
5 - 7 (0.5 - 0.7, 43 - 61)
Brake booster
Load sensing valve (LSV)
Mounting bolt
17 - 21 (1.7 - 2.1, 12 - 15)
Three-way connector
○ : Flare nut
15 - 18 (1.5 - 1.8, 11 - 13)
■ : Connecting bolt
17 - 19 (1.7 - 2.0, 12 - 14)
Primary line
Secondary line
: N•m (kg-m, in-lb)
: N•m (kg-m, ft-lb)
ABR387

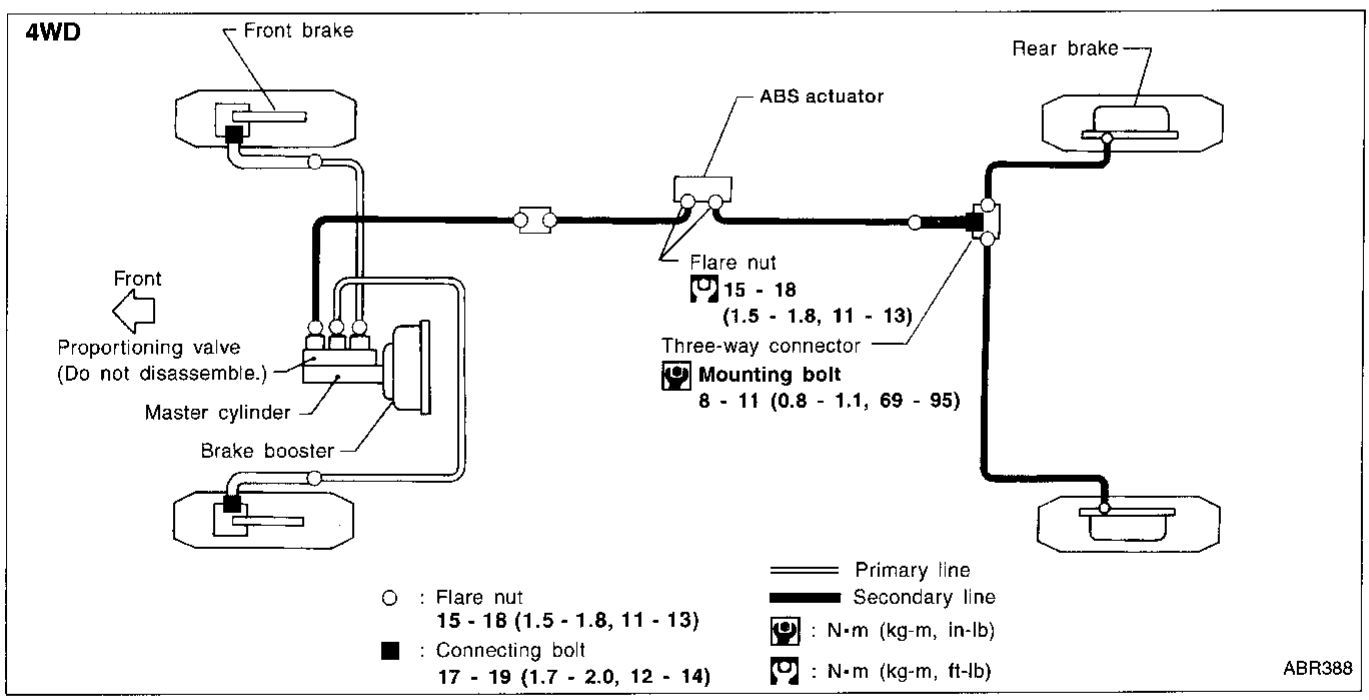
4WD
Front brake
Rear brake
ABS actuator
Front
Flare nut
15 - 18
(1.5 - 1.8, 11 - 13)
Proportioning valve
(Do not disassemble.)
Three-way connector
Mounting bolt
8 - 11 (0.8 - 1.1, 69 - 95)
Master cylinder
Brake booster
Primary line
Secondary line
○ : Flare nut
15 - 18 (1.5 - 1.8, 11 - 13)
■ : Connecting bolt
17 - 19 (1.7 - 2.0, 12 - 14)
: N•m (kg-m, in-lb)
: N•m (kg-m, ft-lb)
ABR388

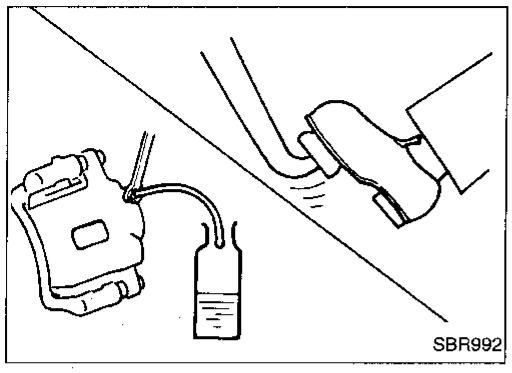

REMOVAL

CAUTION:

- **Be careful not to splash brake fluid on painted areas; it may cause paint damage. If brake fluid is splashed on painted areas, wash it away with water immediately.**
- **All hoses must be free from excessive bending, twisting and pulling.**

1. Connect vinyl tube to air bleeder valve.
2. Drain brake fluid from each air bleeder valve by depressing brake pedal.
3. Remove flare nut connecting brake tube and hose, then withdraw lock spring.
4. Cover openings to prevent entrance of dirt whenever disconnecting brake line.

INSPECTION

Check brake lines (tubes and hoses) for cracks, deterioration and other damage. Replace any damaged parts.

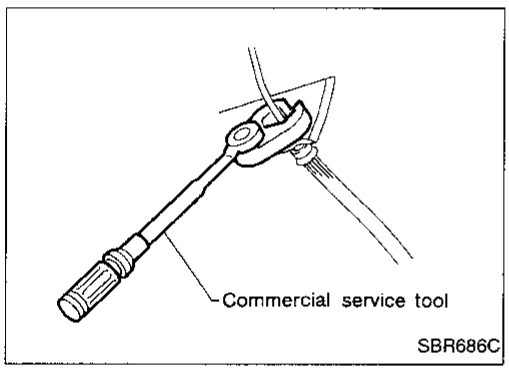

INSTALLATION

CAUTION:

- **Refill with new brake fluid DOT 3.**
- **Never reuse drained brake fluid.**

1. Tighten all flare nuts and connecting bolts.
   Flare nut:
   : 15 - 18 N·m (1.5 - 1.8 kg-m, 11 - 13 ft-lb)
   Connecting bolt:
   : 17 - 19 N·m (1.7 - 2.0 kg-m, 12 - 14 ft-lb)
2. Refill until new brake fluid comes out of each air bleeder valve.
3. Bleed air. Refer to "Bleeding Procedure", BR-5.

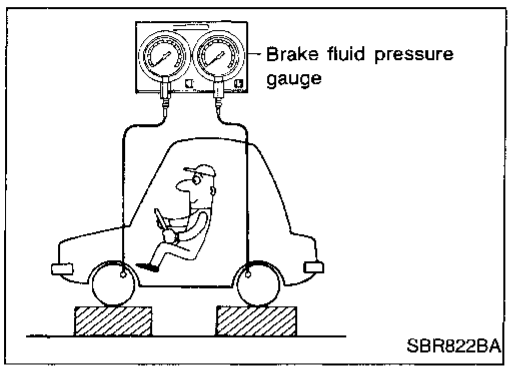

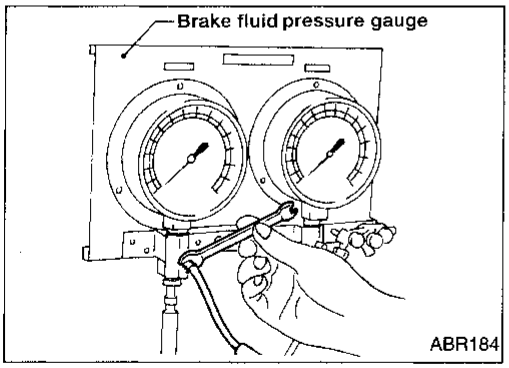

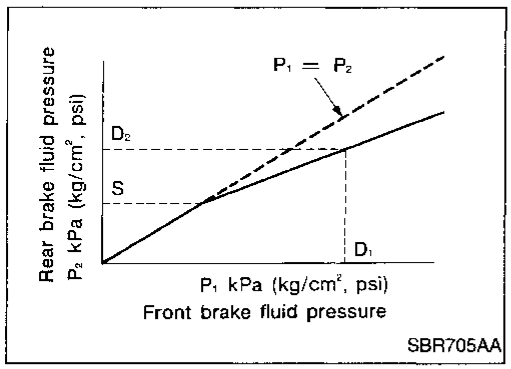

Proportioning Valve (4WD)

INSPECTION

CAUTION:

- **Carefully monitor brake fluid level at master cylinder.**
- **Use new brake fluid DOT 3.**
- **Be careful not to splash brake fluid on painted areas; it may cause paint damage. If brake fluid is splashed on paint areas, wash it away with water immediately.**
- **Depress pedal slowly when raising front brake pressure.**
- **Check rear brake pressure 2 seconds after front brake pressure reaches specified value.**
- **Disconnect ABS harness connectors from ABS actuator relay box before checking.**

1. Connect Tool to air bleeders of front and rear brakes on either LH or RH side.
2. Bleed air from the Tool.
3. Check fluid pressure by depressing brake pedal.

Unit: kPa (kg/cm^2, psi)

Wheelbase	Standard	Long
Applied pressure (Front brake) D_1	5,884 (60, 853)	6,375 (65, 924)
Output pressure (Rear brake) D_2	2,942 - 3,334 (30 - 34, 427 - 483)	3,432 - 3,825 (35 - 39, 498 - 555)

If output pressure is out of specifications, replace master cylinder assembly (built-in type).

4. Bleed air after disconnecting the Tool. Refer to "Bleeding Procedure", BR-5.

REMOVAL AND INSTALLATION (Built-in type)

- **Always replace proportioning valve and master cylinder as an assembly.**
- Refer to "Removal", "MASTER CYLINDER", BR-13.

Load Sensing Valve (2WD)

Load Sensing Valve
SEC. 462

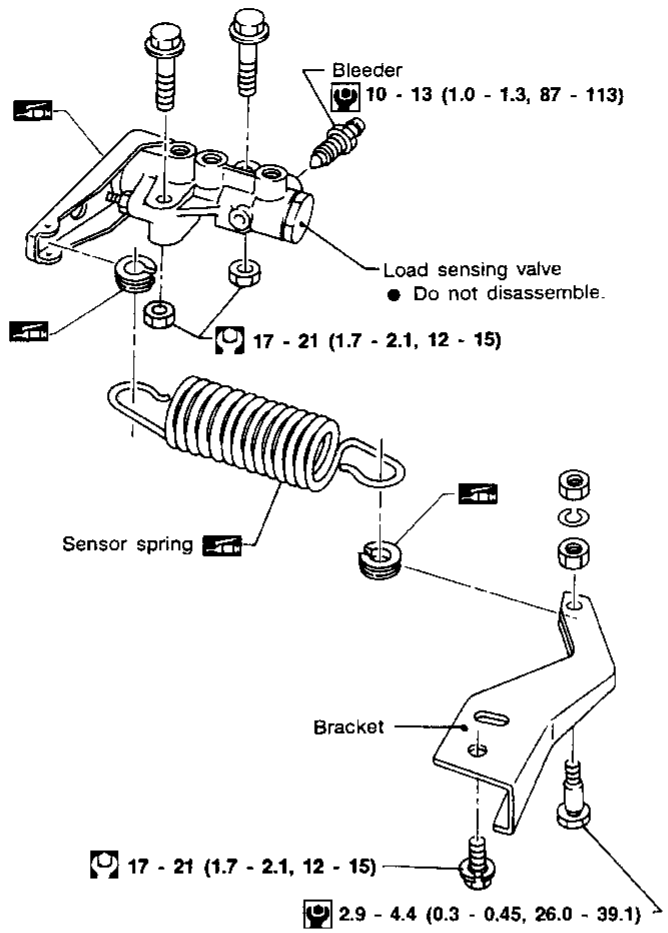

REMOVAL AND INSTALLATION

CAUTION:

- **Refill with new brake fluid DOT 3.**
- **Be careful not to splash brake fluid on painted areas; it may cause paint damage. If brake fluid is splashed on painted areas, wash it away with water immediately.**

1. Replace damaged load sensing valve linkage as an assembly.
2. When disassembling, apply multi-purpose grease to linkage.
3. Tighten all flare nuts and bolts.
   : 15 - 18 N·m (1.5 - 1.8 kg-m, 11 - 13 ft-lb)
4. Bleed air. Refer to "Bleeding Procedure", BR-5.

Load Sensing Valve (2WD) (Cont'd)

INSPECTION

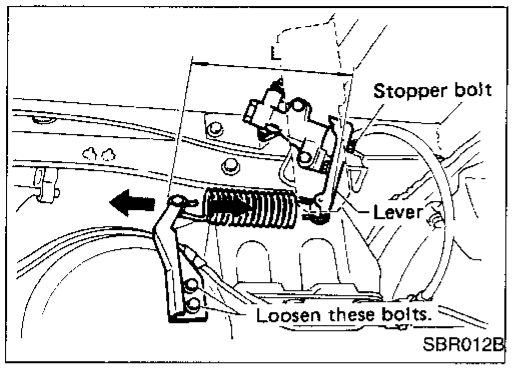

1. Ensure vehicle is unladen condition*.
   * Fuel, radiator coolant and engine oil full. Spare tire, jack, hand tools and mats in designated positions.
2. Have a driver sit in the driver's seat and one person sit on the rear of the vehicle. Then have the person on the rear of the vehicle slowly get off. This is necessary to stabilize suspension deflection.
3. Adjust length "L" as follows:

a. Loosen stopper bolt locknut.
b. Pull lever against stopper bolt and adjust by turning stopper bolt.
c. Tighten stopper bolt locknut.

Length "L":
Approx. 189 mm (7.44 in)

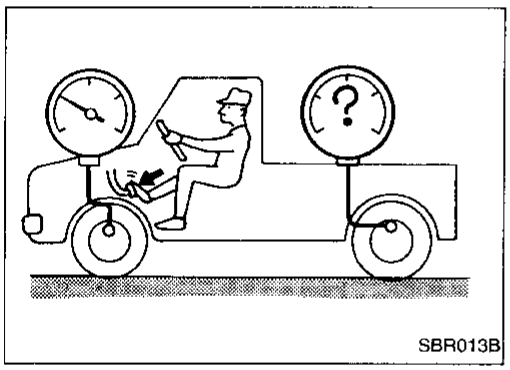

4. Install pressure gauge to front and rear brake.
5. Bleed air from the Tool.
6. Raise front brake pressure to 5,884 kPa (60 kg/cm^2, 853 psi) and 9,807 kPa (100 kg/cm^2, 1,422 psi) and check rear brake pressure.

Rear brake pressure:
Refer to table below.

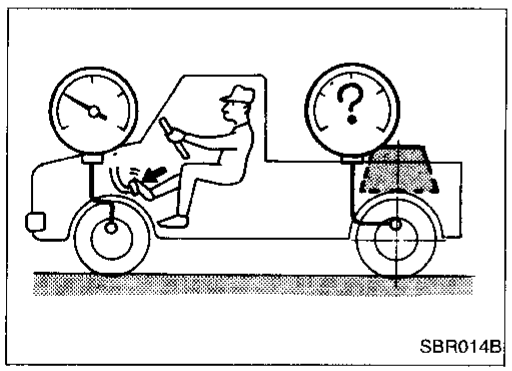

7. Set down weight slowly over axle center so that sensor spring length becomes the same as when in loaded condition (refer to table below). Check rear brake pressure in the same way described in step 6.

Unit: kPa (kg/cm^2, psi)

	U.S.A.	Canada
Without weight	2,942 - 3,727 (30 - 38, 427 - 540)	2,942 - 3,727 (30 - 38, 427 - 540)
With weight	3,432 - 4,805 (35 - 49, 498 - 697)	3,334 - 4,707 (34 - 48, 483 - 683)

Removal and Installation

SEC. 465

Pedal bracket

Snap ring

ASCD brake switch
12 - 15 (1.2 - 1.5, 9 - 11)

Stop lamp switch
12 - 15 (1.2 - 1.5, 9 - 11)

Clevis pin*

13 - 16 (1.3 - 1.6, 9 - 12)

8 - 11 (0.8 - 1.1, 69 - 95)

Brake pedal

* **Replace plastic stopper located at the end of clevis pin if deformed or damaged.**

: N•m (kg-m, ft-lb)

: N•m (kg-m, in-lb)

ABR454

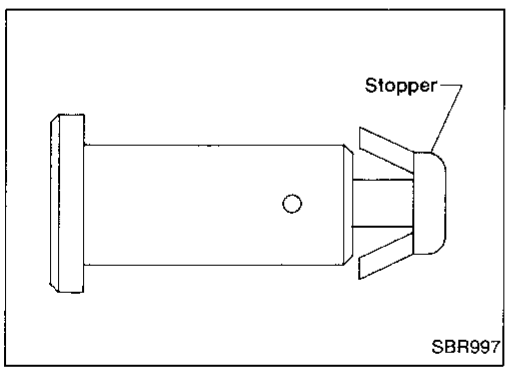

Inspection

Check brake pedal for following items:

- Brake pedal bend
- Clevis pin deformation
- Crack of any welded portion
- Crack or deformation of clevis pin stopper

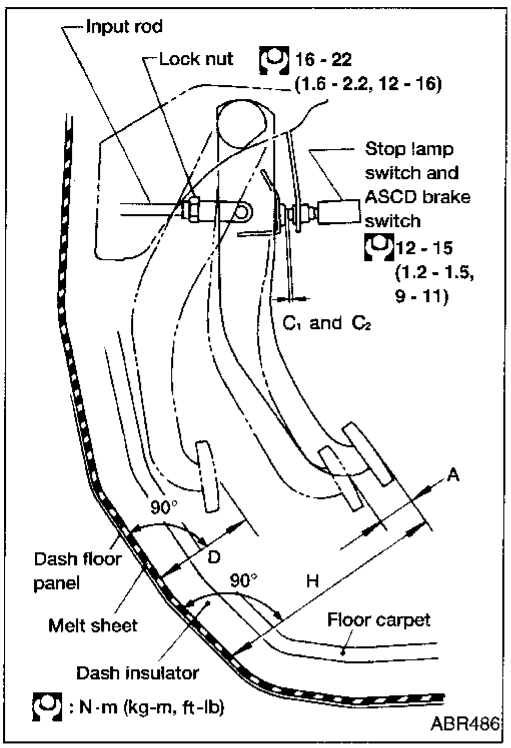

Adjustment

Check brake pedal free height from melt sheet.

H: Free height
Refer to SDS BR-51.
D: Depressed height
Refer to SDS BR-51.
Under force of 490 N (50 kg, 110 lb) with engine running
C_1: Clearance between pedal stopper and threaded end of stop lamp switch
0.3 - 1.0 mm (0.012 - 0.039 in)
C_2: Clearance between pedal stopper and threaded end of ASCD switch
0.3 - 1.0 mm (0.012 - 0.039 in)
A: Pedal free play at clevis
1 - 3 mm (0.04 - 0.12 in)

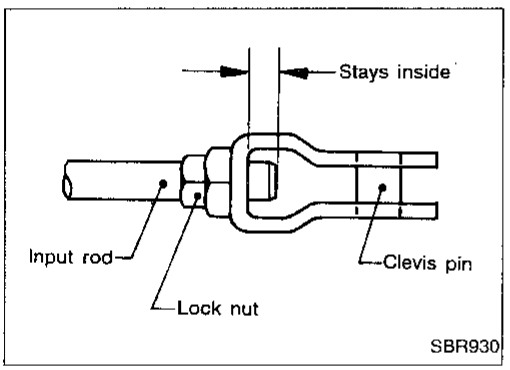

If necessary, adjust brake pedal free height.

1. Loosen lock nut and adjust pedal free height by turning brake booster input rod. Then tighten lock nut.

- **Make sure that the tip of input rod stays inside.**

2. Loosen lock nut and adjust clearance "C_1" and "C_2" with stop lamp switch and ASCD brake switch respectively. Then tighten lock nuts.
3. Check pedal free play.

- **Make sure that stop lamps are off when pedal is released.**

4. Check depressed height of brake pedal while engine is running. If lower than specification, check for leaks, air in system and damage to components (master cylinder, wheel cylinder, etc.).

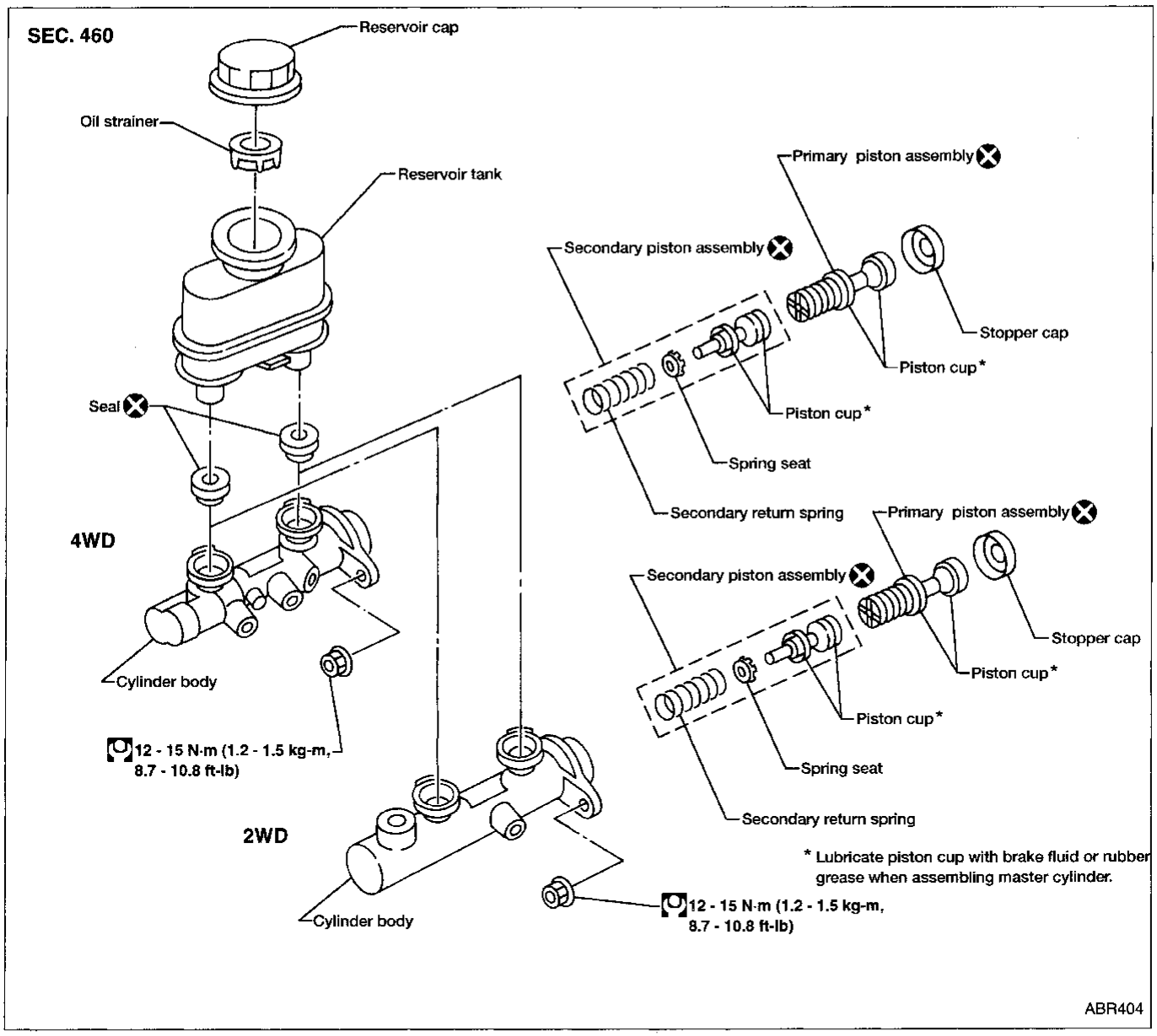

Removal

CAUTION:

- **Be careful not to splash brake fluid on painted areas; it may cause paint damage. If brake fluid is splashed on painted areas, wash it away with water immediately.**
- **In the case of brake fluid leakage from the master cylinder, disassemble the cylinder. Then check piston cups for deformation and scratches and replace necessary parts.**

1. Connect a vinyl tube to air bleeder valve.
2. Drain brake fluid from each air bleeder valve, depressing brake pedal to empty fluid from master cylinder.
3. Remove brake pipe flare nuts.
4. Remove master cylinder mounting nuts.

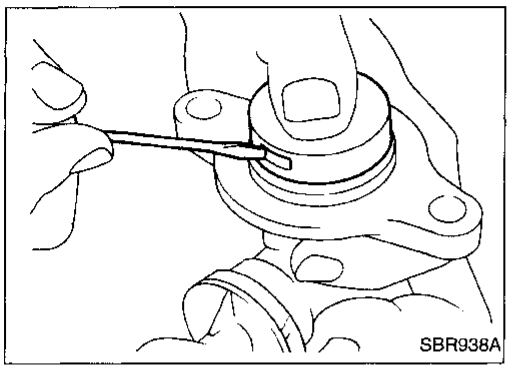

Disassembly

1. Bend claws of stopper cap outward.

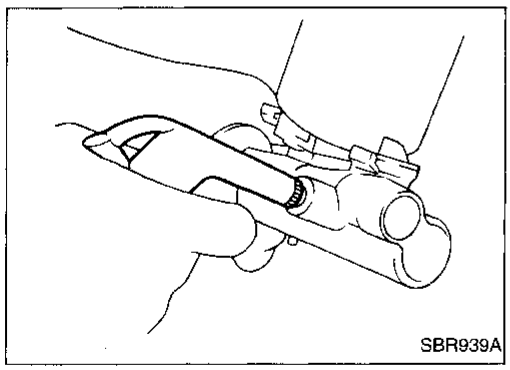

2. Remove piston assemblies.
- **If it is difficult to remove secondary piston assembly, gradually apply compressed air through fluid outlet.**
3. Draw out reservoir tank.

Inspection

Check master cylinder inner wall for pin holes and scratches. Replace if damaged.

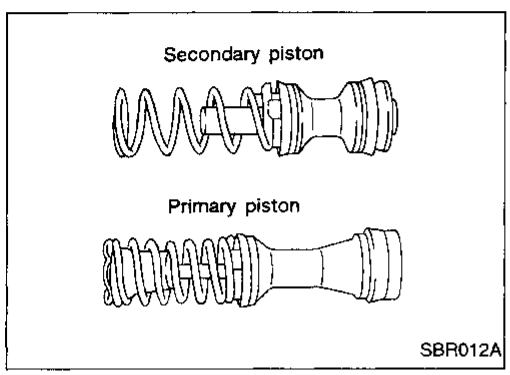

Assembly

1. Insert secondary piston assembly. Then insert primary piston assembly.
- **Pay attention to direction of piston cups in figure at left. Also, insert pistons squarely to avoid scratches on cylinder bore.**

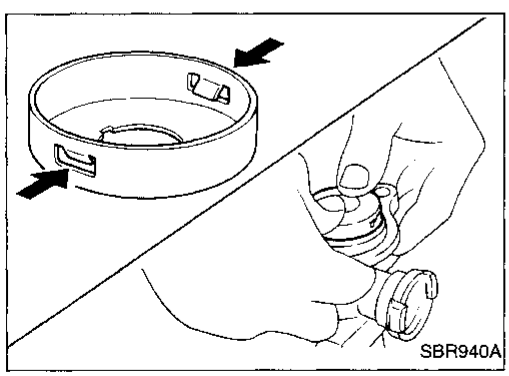

2. Install stopper cap.
- **Before installing stopper cap, ensure that claws are bent inward.**
3. Push reservoir tank seals into cylinder body.
4. Push reservoir tank into cylinder body.

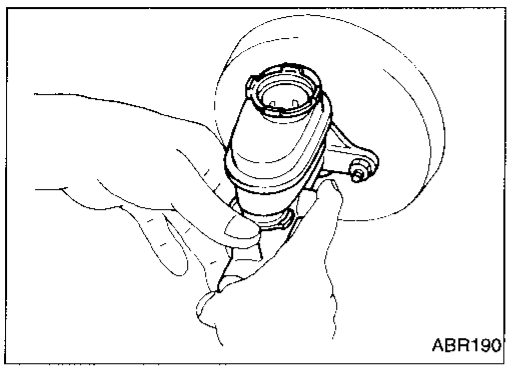

Installation

CAUTION:

- **Refill with new brake fluid DOT 3.**
- **Never reuse drained brake fluid.**

1. Place master cylinder onto brake booster and secure mounting nuts lightly.
2. Tighten mounting nuts.
   [O]: 12 - 15 N·m (1.2 - 1.5 kg-m, 8.7 - 10.8 ft-lb)
3. Fill up reservoir tank with new brake fluid.
4. Plug all ports on master cylinder with fingers to prevent air suction while releasing brake pedal.
5. Have driver depress brake pedal slowly several times until no air comes out of master cylinder.
6. Fit brake lines to master cylinder.
7. Tighten flare nuts.
   [O]: 15 - 18 N·m (1.5 - 1.8 kg-m, 11 - 13 ft-lb)
8. Bleed air from brake system. Refer to "Bleeding Procedure", BR-5.

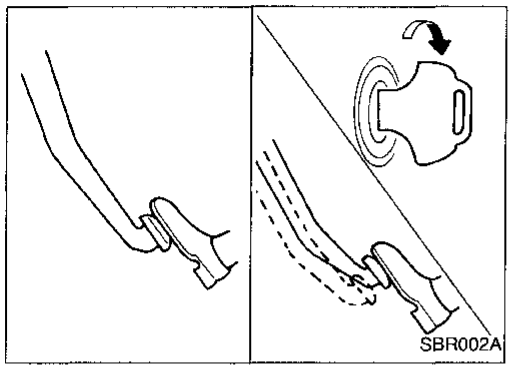

On-vehicle Service

OPERATING CHECK

- Depress brake pedal several times with engine off. After exhausting vacuum, make sure there is no change in pedal stroke.
- Depress brake pedal, then start engine. If pedal goes down slightly, operation is normal.

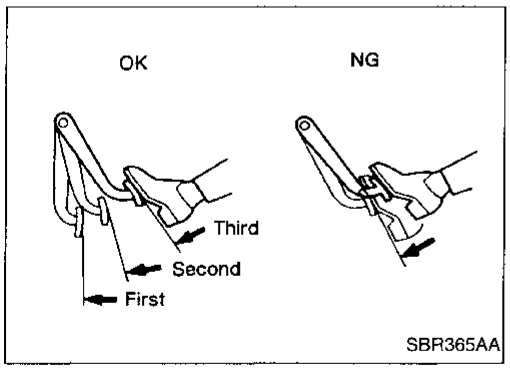

AIRTIGHT CHECK

- Start engine, and stop it after one or two minutes. Depress brake pedal several times slowly. Booster is airtight if pedal stroke is less each time.
- Depress brake pedal while engine is running, and stop engine with pedal depressed. The pedal position should not change after holding pedal down for **30 seconds**.

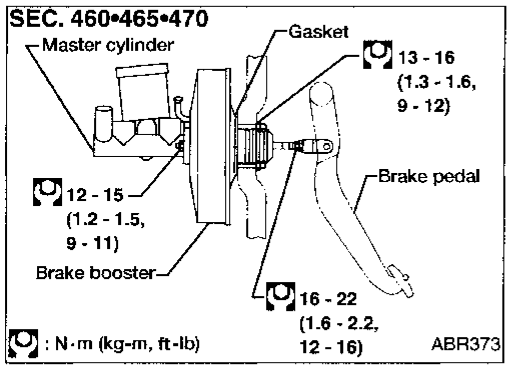

Removal

CAUTION:

- **Be careful not to splash brake fluid on painted areas; it may cause paint damage. If brake fluid is splashed on painted areas, wash it away with water immediately.**
- **Be careful not to deform or bend brake pipes during removal of booster.**

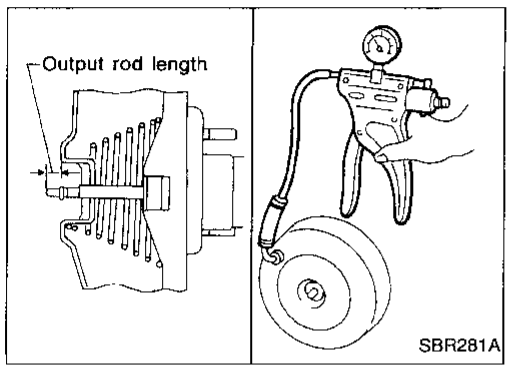

Inspection

OUTPUT ROD LENGTH CHECK

1. Apply vacuum of –66.7 kPa (–500 mmHg, –19.69 inHg) to brake booster with a hand vacuum pump.
2. Check output rod length.
   Specified length:
   10.275 - 10.525 mm (0.4045 - 0.4144 in)

Installation

CAUTION:

- **Be careful not to deform or bend brake pipes during installation of booster.**
- **Replace clevis pin if damaged.**
- **Refill with new brake fluid DOT 3.**
- **Never reuse drained brake fluid.**
- **Take care not to damage brake booster mounting bolt thread when installing. Due to the narrow angle of installation, the threads can be damaged by the dash panel.**

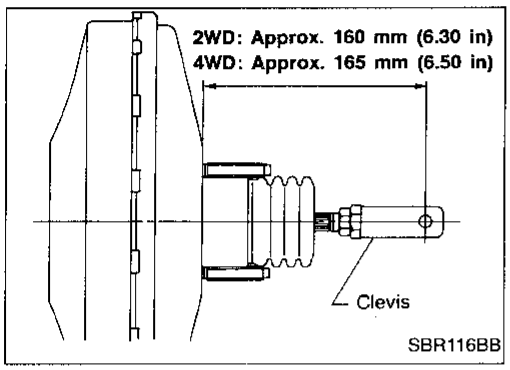

1. Before fitting booster, temporarily adjust clevis to dimension shown.
2. Fit booster, then secure mounting nuts (brake pedal bracket to brake booster) lightly.
3. Connect brake pedal and booster input rod with clevis pin.
4. Secure mounting nuts.
   : 13 - 16 N·m (1.3 - 1.6 kg-m, 9 - 12 ft-lb)
5. Install master cylinder. Refer to "Installation", "MASTER CYLINDER", BR-15.
6. Adjust brake pedal height and free play. Refer to BR-12.
7. Secure lock nut for clevis.
   : 16 - 22 N·m (1.6 - 2.2 kg-m, 12 - 16 ft-lb)
8. Bleed air. Refer to "Bleeding Procedure", BR-5.

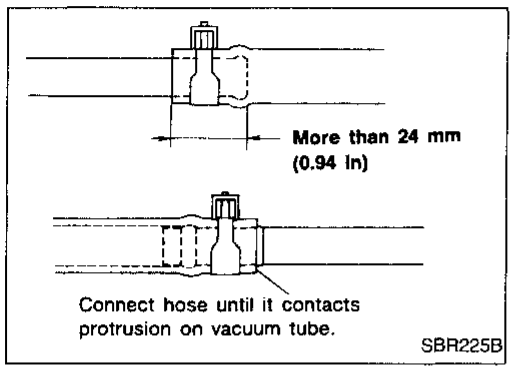

Removal and Installation

CAUTION:
When installing vacuum hoses, pay attention to the following points.

- **Do not apply any oil or lubricants to vacuum hose and check valve.**
- **Insert vacuum tube into vacuum hose as shown.**

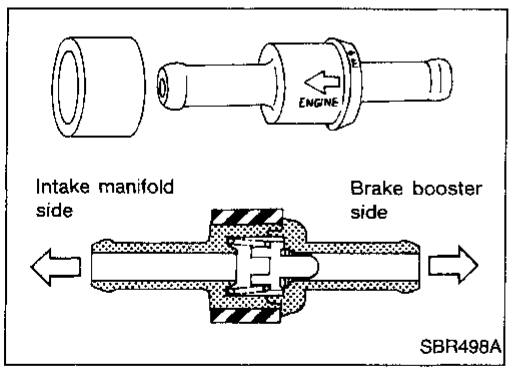

- **Install check valve, paying attention to its direction.**

Inspection

HOSES AND CONNECTORS

Check vacuum lines, connections and check valve for airtightness, improper attachment chafing and deterioration.

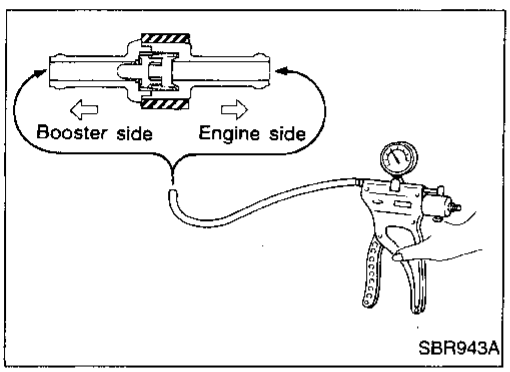

CHECK VALVE

Check vacuum with a vacuum pump.

Connect to booster side	Vacuum should exist.
Connect to engine side	Vacuum should not exist.

Pad Replacement

WARNING:
Clean brake pads with a vacuum dust collector to minimize the hazard of airborne materials.

CAUTION:
- **When cylinder body is open, do not depress brake pedal or caliper piston will pop out.**
- **Be careful not to damage piston boot or get oil on rotor. Always replace shims when replacing pads.**
- **If shims are rusted or show peeling of the rubber coat, replace them with new shims.**
- **It is only necessary to remove connecting bolt if disassembling or replacing caliper assembly. Otherwise, suspend cylinder body with wire so as not to stretch brake hose.**

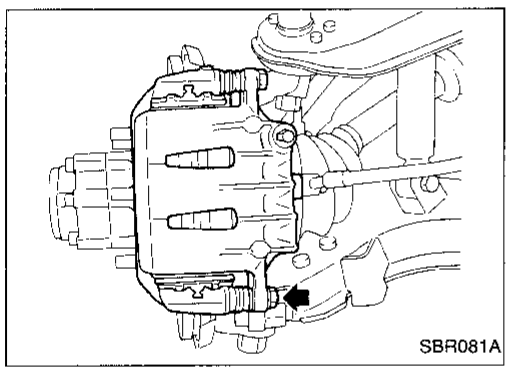

1. Remove master cylinder reservoir cap.
2. Remove lower pin bolt.

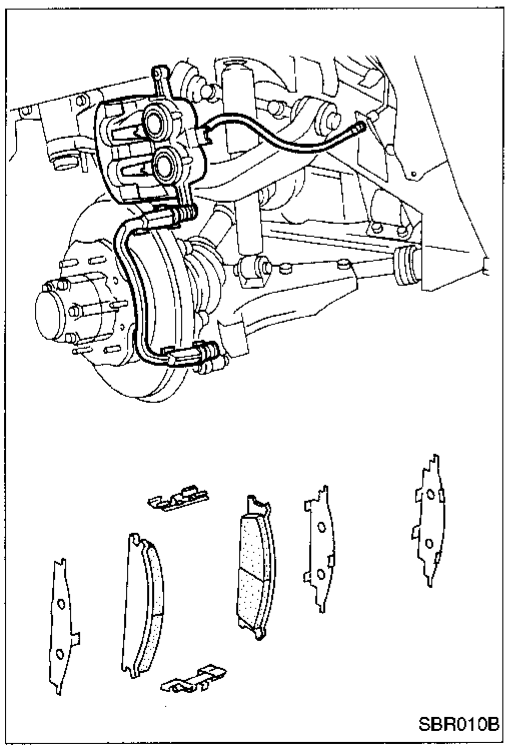

3. Open cylinder body upward. Then remove pad retainers and inner and outer shims.
   Standard pad thickness:
   CL28VA model
   11 mm (0.44 in)
   CL28VD model
   10 mm (0.39 in)
   Pad wear limit:
   2.0 mm (0.079 in)
- **Carefully monitor brake fluid level because brake fluid will return to reservoir when pushing back piston.**

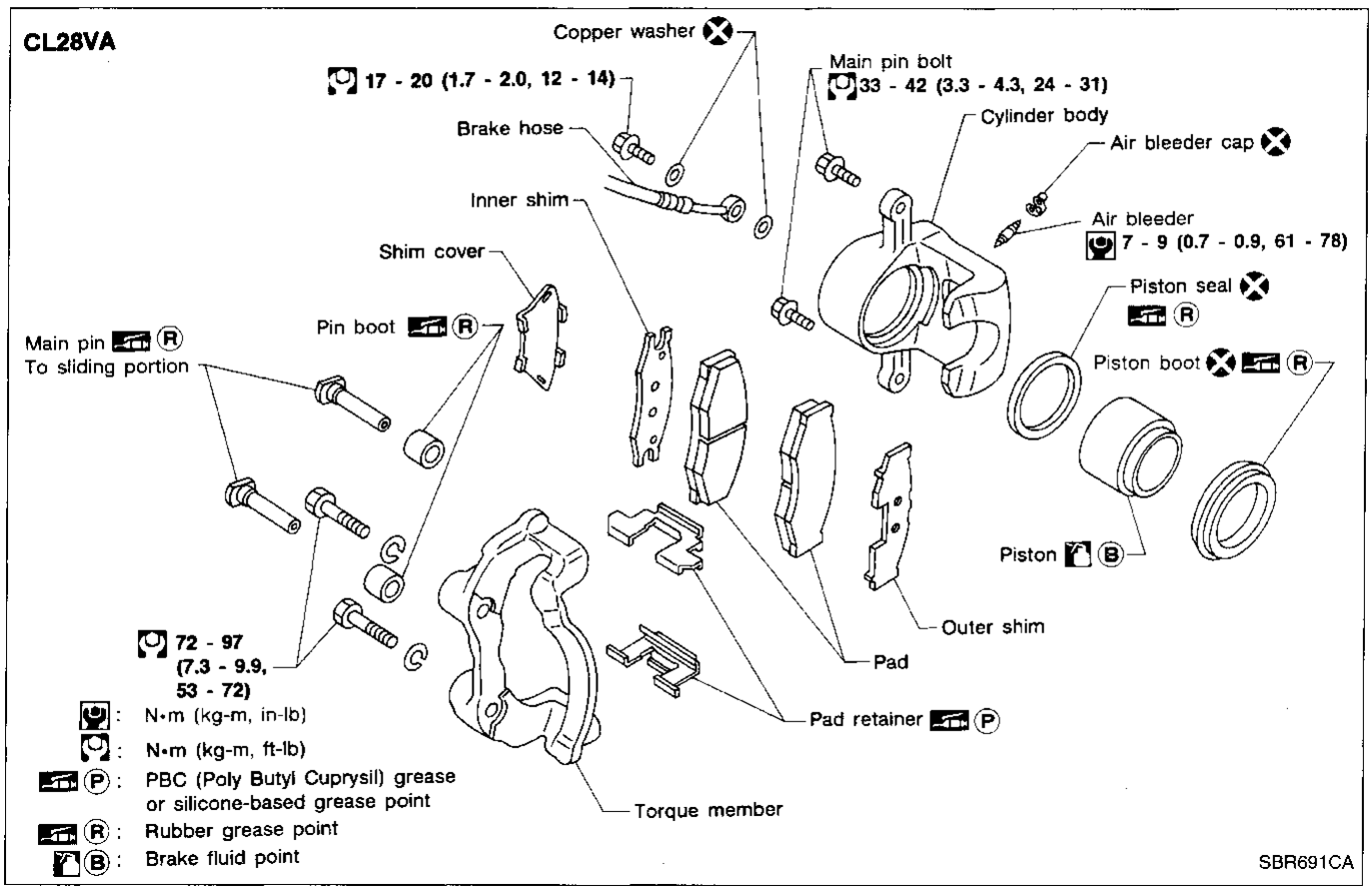
CL28VA
Copper washer
17 - 20 (1.7 - 2.0, 12 - 14)
Main pin bolt
33 - 42 (3.3 - 4.3, 24 - 31)
Cylinder body
Brake hose
Air bleeder cap
Inner shim
Air bleeder
7 - 9 (0.7 - 0.9, 61 - 78)
Shim cover
Piston seal
Pin boot
Main pin
To sliding portion
Piston boot
Piston
Outer shim
72 - 97
(7.3 - 9.9,
53 - 72)
Pad
: N•m (kg-m, in-lb)
: N•m (kg-m, ft-lb)
: PBC (Poly Butyl Cuprysil) grease or silicone-based grease point
: Rubber grease point
: Brake fluid point
Pad retainer
Torque member
SBR691CA

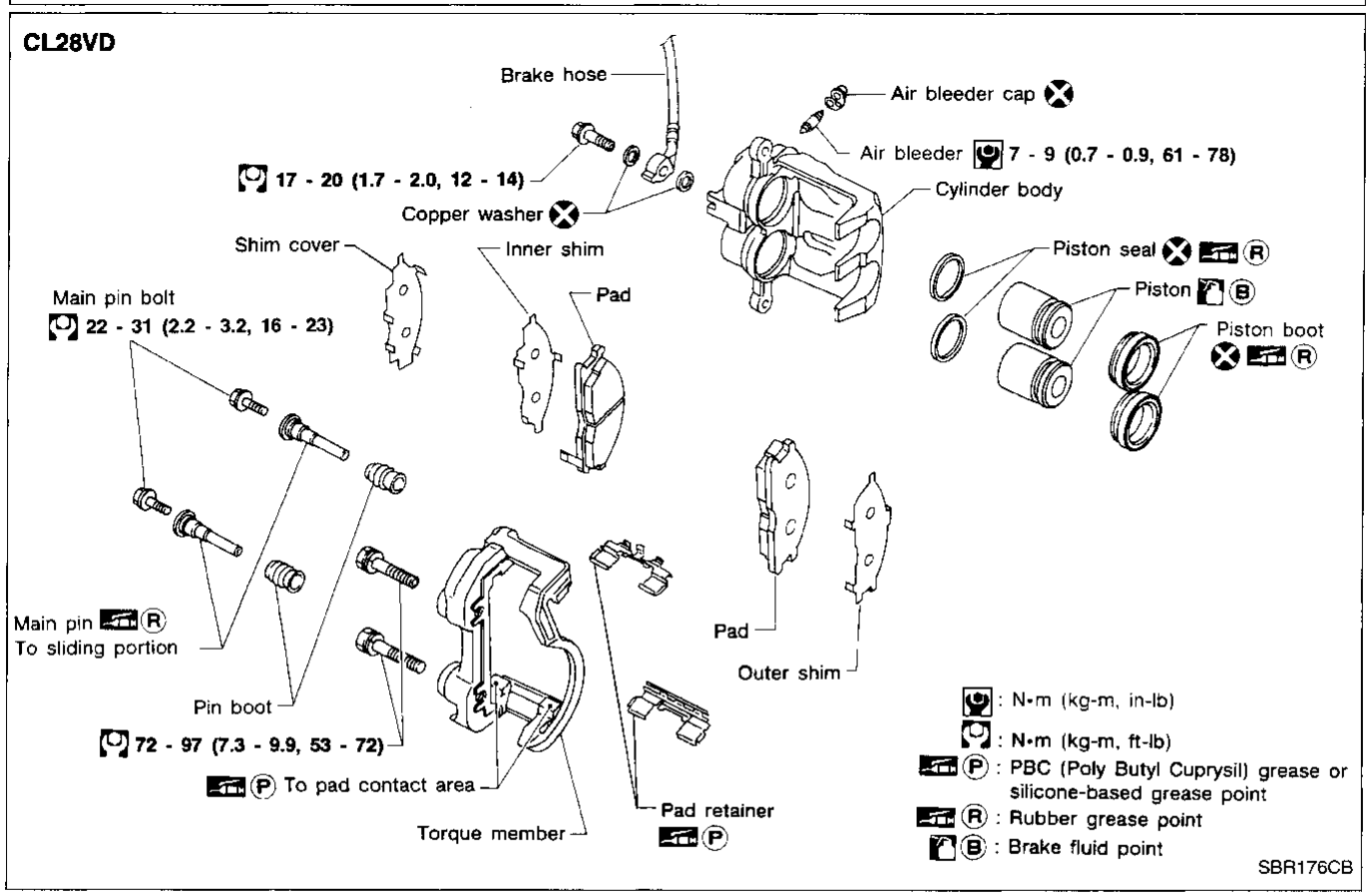
CL28VD
Brake hose
Air bleeder cap
Air bleeder
7 - 9 (0.7 - 0.9, 61 - 78)
17 - 20 (1.7 - 2.0, 12 - 14)
Cylinder body
Copper washer
Shim cover
Inner shim
Piston seal
Pad
Piston
Main pin bolt
22 - 31 (2.2 - 3.2, 16 - 23)
Piston boot
Main pin
To sliding portion
Pad
Outer shim
Pin boot
72 - 97 (7.3 - 9.9, 53 - 72)
To pad contact area
Torque member
Pad retainer
: N•m (kg-m, in-lb)
: N•m (kg-m, ft-lb)
: PBC (Poly Butyl Cuprysil) grease or silicone-based grease point
: Rubber grease point
: Brake fluid point
SBR176CB

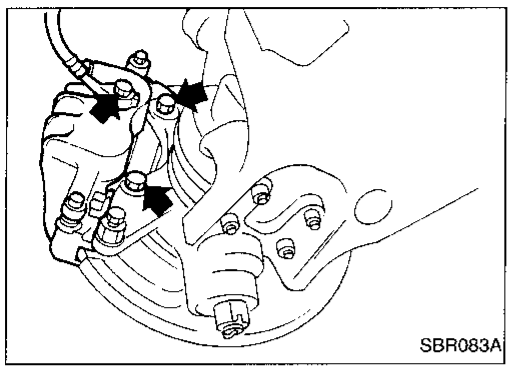

Removal

WARNING:
Clean brake pads with a vacuum dust collector to minimize the hazard of airborne materials.

CAUTION:
Suspend caliper assembly with wire so as not to stretch brake hose.

Remove torque member fixing bolts and connecting bolt.

- **It is only necessary to remove connecting bolt if disassembling or replacing caliper assembly. Otherwise, suspend caliper assembly with wire so as not to stretch brake hose.**

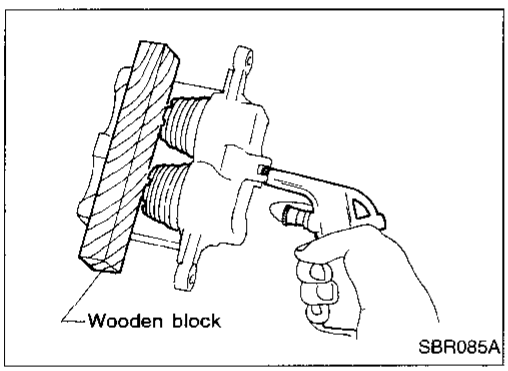

Disassembly

WARNING:
Do not place your fingers in front of piston.

CAUTION:

- **Do not scratch or score cylinder wall.**
- **CL28VD type front disc brake uses plastic pistons, handle them carefully.**

1. Push out piston and dust cover with compressed air.
   For CL28VD (2-piston type), use a wooden block so that both pistons come out evenly.
2. Remove piston seal with a suitable tool.

Inspection — Caliper

CYLINDER BODY

- Check inside surface of cylinder for score, rust, wear, damage and presence of foreign objects. If any of the above conditions are observed, replace cylinder body.
- Minor damage from rust or foreign objects may be eliminated by polishing the surface with a fine emery sandpaper. Replace cylinder body if necessary.

CAUTION:
Use brake fluid to clean. Never use mineral oil.

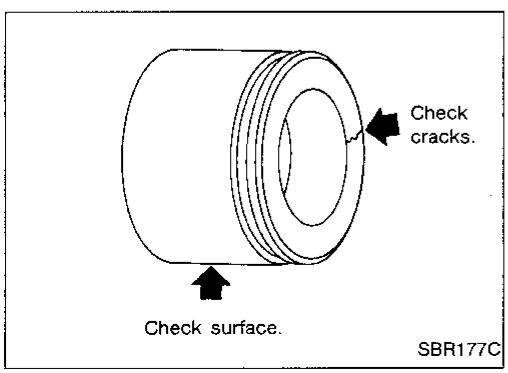

PISTON

— for steel piston (CL28VA) —

Check piston for score, rust, wear, damage and presence of foreign objects. Replace if any of these conditions are observed.

CAUTION:
Piston sliding surface is plated. Do not polish with emery sandpaper even if rust or foreign objects are stuck to sliding surface.

— for plastic piston (CL28VD) —

Check pistons for uneven surface, chips and cracks. Replace if any of these conditions are observed.

Inspection — Caliper (Cont'd)

SLIDE PIN, PIN BOLT AND PIN BOOT

Check for wear, cracks and other damage. Replace if any of these conditions are observed.

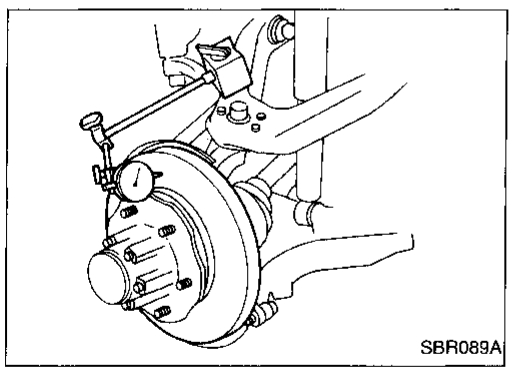
SBR089A

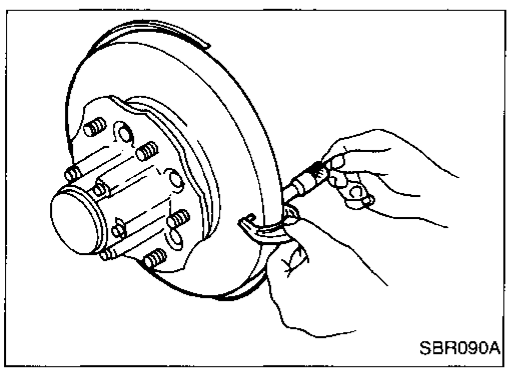
SBR090A

Inspection — Rotor

RUNOUT

1. Check runout using a dial indicator.

- **Make sure that wheel bearing axial end play is within the specifications before measuring. Refer to FA section ("Front Wheel Bearing", "ON-VEHICLE SERVICE").**
  Maximum runout:
  0.07 mm (0.0028 in)

2. If the runout is out of specification, machine rotor with on-car brake lathe ("MAD, DL-8700", "AMMCO 700 and 705" or equivalent).

THICKNESS

Thickness variation (At least 8 positions):
Maximum 0.02 mm (0.0008 in)

If thickness variation exceeds the specification, machine rotor with on-car brake lathe.

Rotor repair limit:
CL28VA 20.0 mm (0.787 in)
CL28VD 24.0 mm (0.945 in)

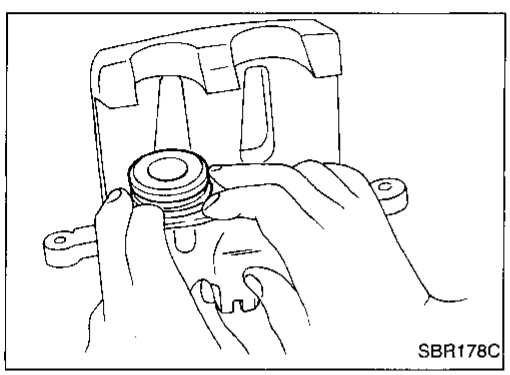
SBR178C

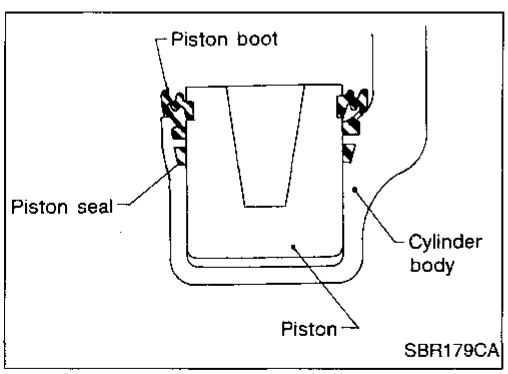

SBR179CA

Assembly

1. Insert piston seal into groove on cylinder body.
2. With piston boot fitted to piston, insert piston boot into groove on cylinder body and install piston.
3. Properly secure piston boot.

CAUTION:

- **Secure dust seal properly.**
- **Lubricate with new brake fluid before installing plastic pistons (CL28VD) into cylinder body.**

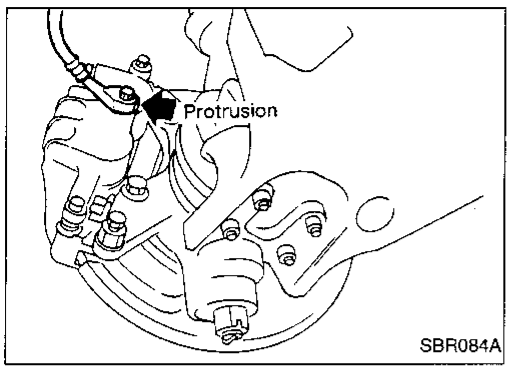

Installation

CAUTION:

- **Refill with new brake fluid DOT 3.**
- **Never reuse drained brake fluid.**

1. Install caliper assembly.
2. Install brake hose to caliper securely.
3. Install all parts and secure all bolts.
4. Bleed air. Refer to "Bleeding Procedure", BR-5.

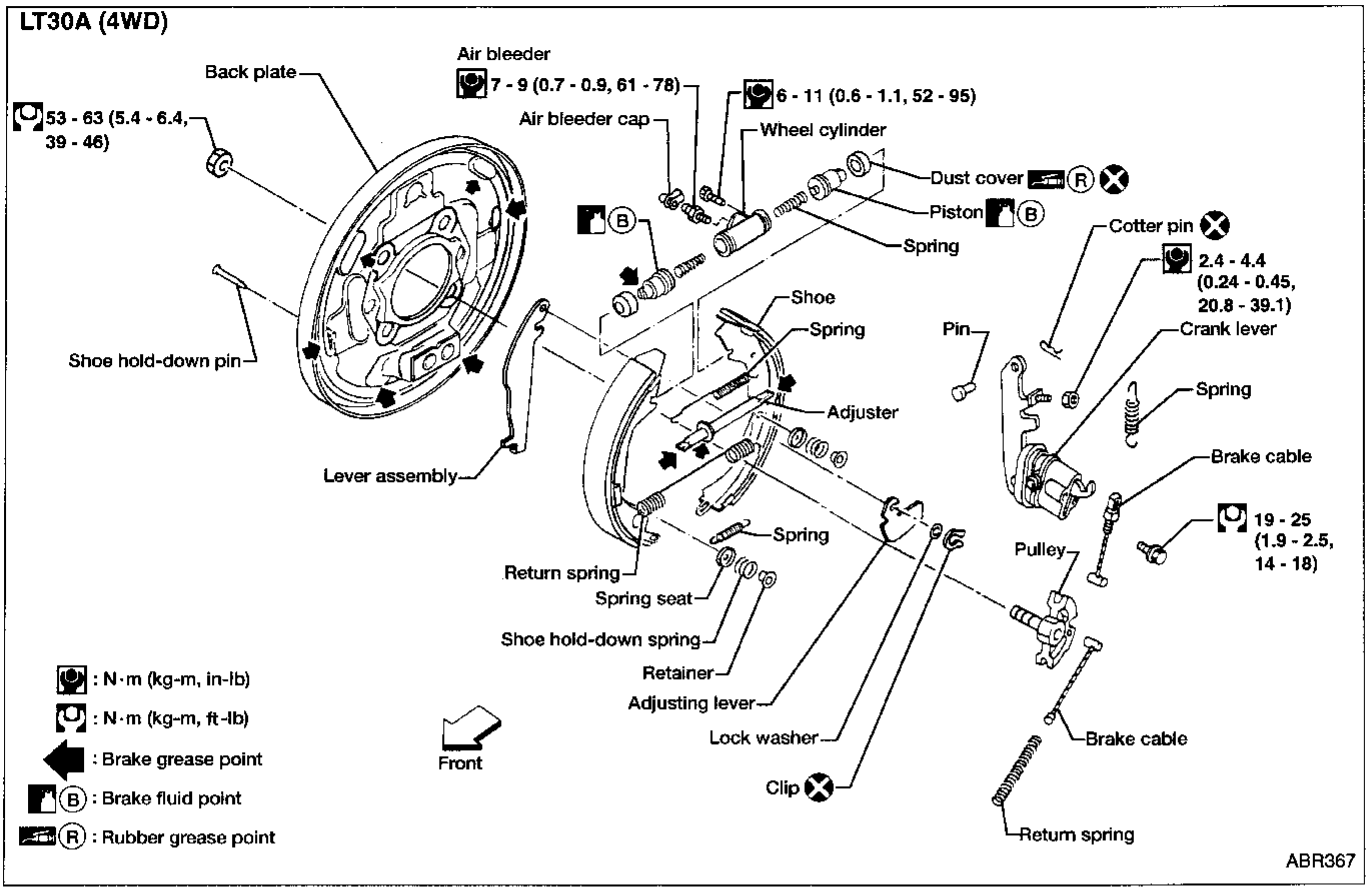
LT30A (4WD)
Back plate
Air bleeder
7 - 9 (0.7 - 0.9, 61 - 78)
6 - 11 (0.6 - 1.1, 52 - 95)
53 - 63 (5.4 - 6.4, 39 - 46)
Air bleeder cap
Wheel cylinder
Dust cover
Piston
Spring
Cotter pin
2.4 - 4.4 (0.24 - 0.45, 20.8 - 39.1)
Shoe
Spring
Pin
Crank lever
Shoe hold-down pin
Adjuster
Spring
Brake cable
Lever assembly
Spring
19 - 25 (1.9 - 2.5, 14 - 18)
Pulley
Return spring
Spring seat
Shoe hold-down spring
Retainer
Adjusting lever
Lock washer
Brake cable
Clip
Return spring
Front
: N·m (kg-m, in-lb)
: N·m (kg-m, ft-lb)
: Brake grease point
: Brake fluid point
: Rubber grease point
ABR367

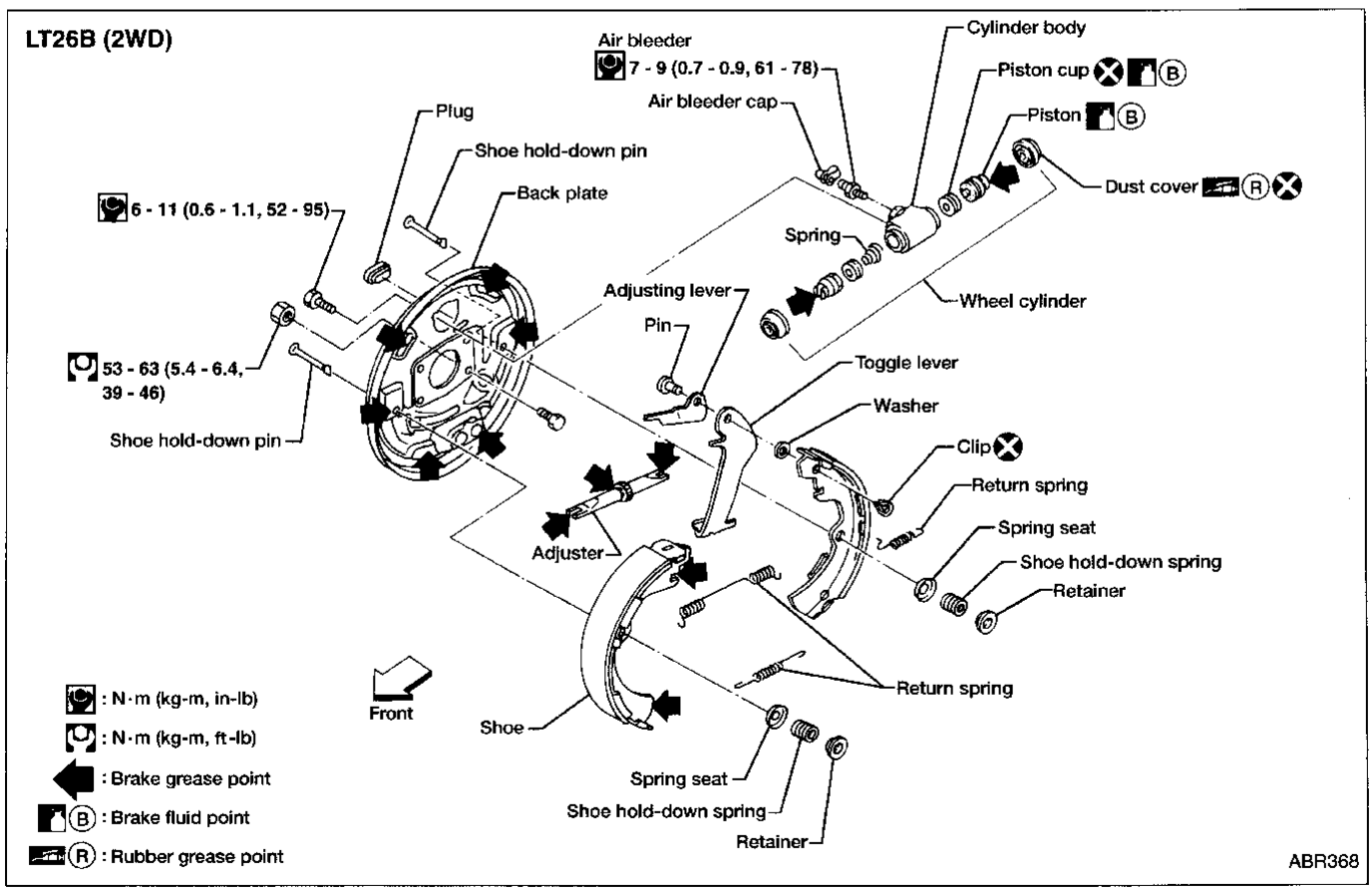
LT26B (2WD)
Air bleeder
7 - 9 (0.7 - 0.9, 61 - 78)
Cylinder body
Piston cup
Air bleeder cap
Piston
Plug
Shoe hold-down pin
Dust cover
Back plate
6 - 11 (0.6 - 1.1, 52 - 95)
Spring
Adjusting lever
Wheel cylinder
Pin
53 - 63 (5.4 - 6.4, 39 - 46)
Toggle lever
Washer
Shoe hold-down pin
Clip
Return spring
Spring seat
Adjuster
Shoe hold-down spring
Retainer
Return spring
Front
Shoe
Spring seat
Shoe hold-down spring
Retainer
: N·m (kg-m, in-lb)
: N·m (kg-m, ft-lb)
: Brake grease point
: Brake fluid point
: Rubber grease point
ABR368

Removal

WARNING:
Clean brake lining with a vacuum dust collector to minimize the hazard of airborne materials.

CAUTION:
Make sure parking brake lever is completely released.

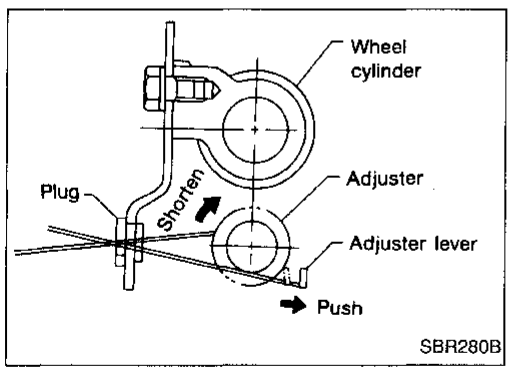

1. Release parking brake lever fully, then remove drum.
- **If drum is hard to remove, the following procedures should be carried out.**

a. **Remove plug. Then shorten adjuster to make clearance between brake shoe and drum.**

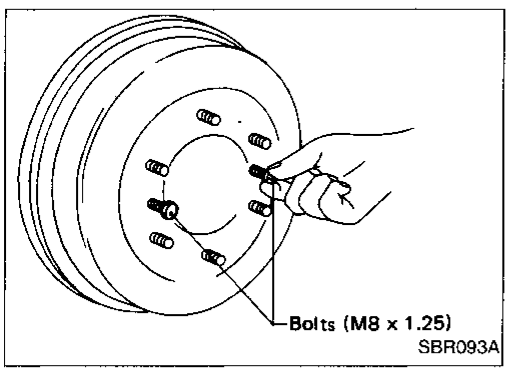

b. **Install two bolts as shown. Tighten the two bolts gradually.**

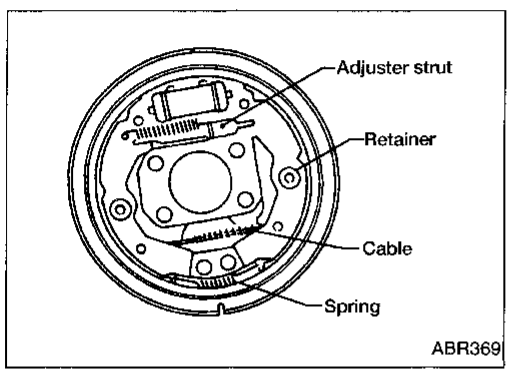

2. After removing retainer, remove spring by rotating shoes.
- **Be careful not to damage wheel cylinder piston boots.**
- **Be careful not to damage parking brake cable when separating it.**

3. Remove adjuster.
4. Disconnect parking brake cable from toggle lever.

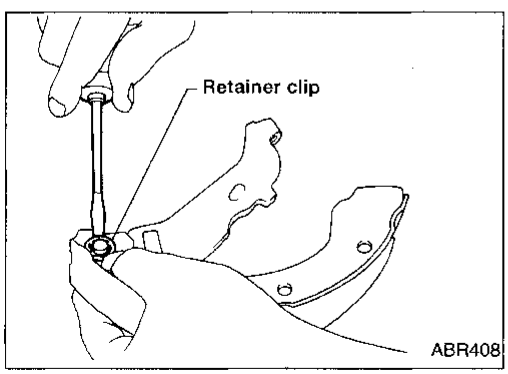

5. Remove retainer clip with a suitable tool. Then separate toggle lever and brake shoe.

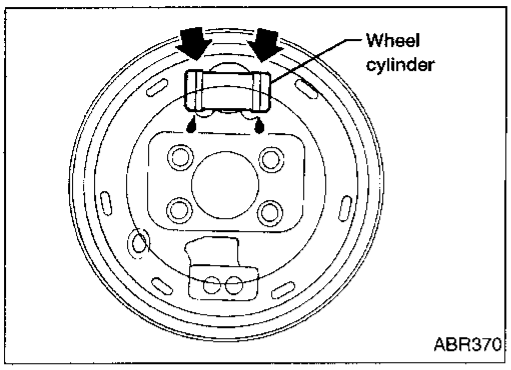

Inspection — Wheel Cylinder

- Check wheel cylinder for leakage.
- Check for wear, damage and loose conditions. Replace if any such conditions exists.

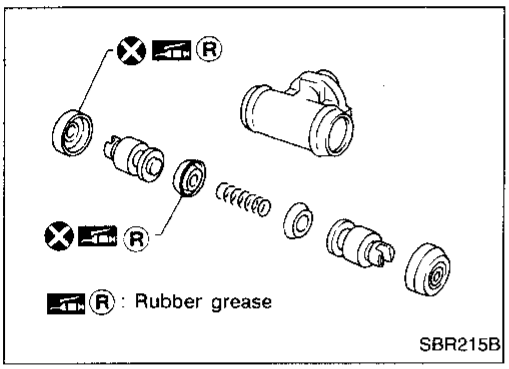

Wheel Cylinder Overhaul

- Check all internal parts for wear, rust and damage. Replace if necessary.
- Pay attention not to scratch cylinder when installing pistons.

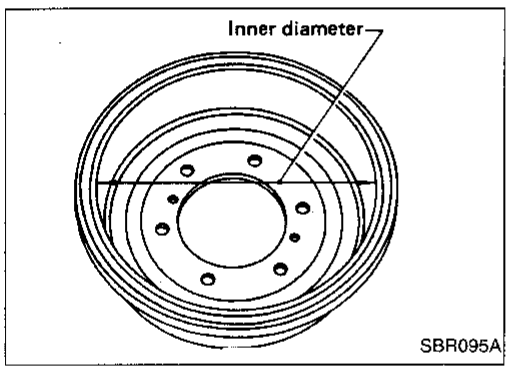

Inspection — Drum

Maximum inner diameter (Repair limit):
LT26B 261.5 mm (10.30 in)
LT30A 296.5 mm (11.67 in)

- Contact surface should be finished with No. 120 to 150 emery sandpaper.
- Using a brake lathe, machine brake drum if it shows score marks, partial wear or stepped wear.
- After brake drum has been completely reconditioned or replaced, check drum and shoes for proper contact pattern.

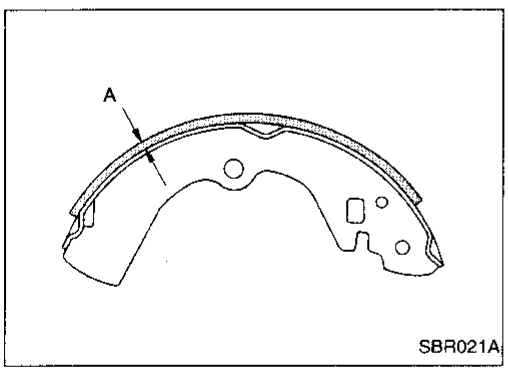

Inspection — Lining

Check lining thickness.

Standard lining thickness:
LT26B 5.5 mm (0.217 in)
LT30A 6.1 mm (0.240 in)
Lining wear limit (A):
LT26B 1.5 mm (0.059 in)
LT30A 1.5 mm (0.059 in)

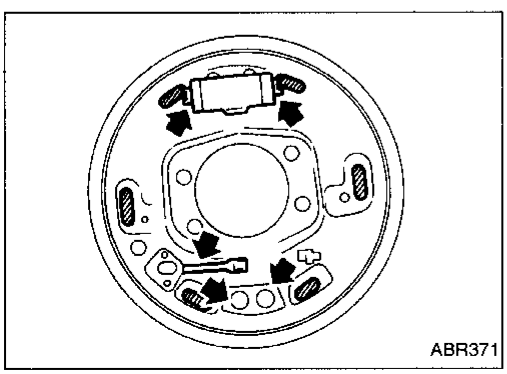

Installation

- **Always perform shoe clearance adjustment. Refer to BR-29.**

1. Fit toggle lever to brake shoe with retainer clip.
2. Apply brake grease to the contact areas shown at left.

Installation (Cont'd)

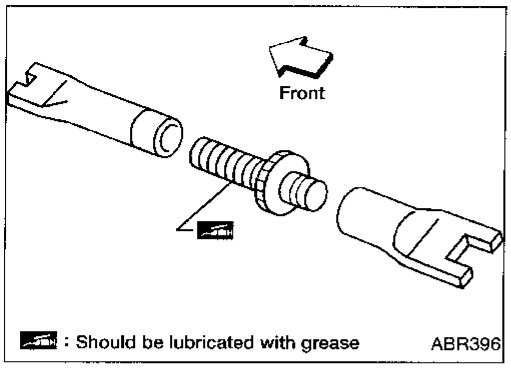

3. Shorten adjuster by rotating it.
- **Pay attention to direction of adjuster.**

Wheel	Screw
Left	Left-hand thread
Right	Right-hand thread

4. Connect parking brake cable to toggle lever.
5. Install all parts.
- **Be careful not to damage wheel cylinder piston boots.**

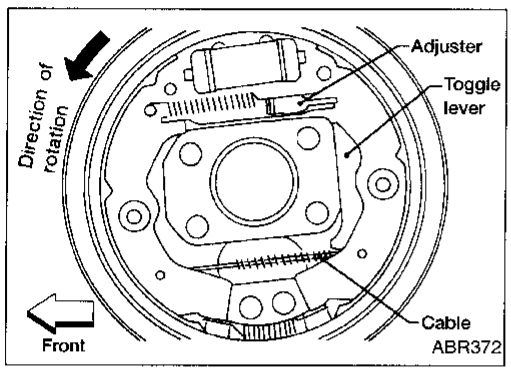

6. Check that all parts are installed properly.
- **After installation is completed, adjust shoe-to-drum clearance.**
7. Install brake drum.
8. When installing new wheel cylinder or overhauling wheel cylinder, bleed air. Refer to "Bleeding Procedure", BR-5.
9. Adjust parking brake. Refer to BR-29.
- Install all the parts by referring to the figure below.

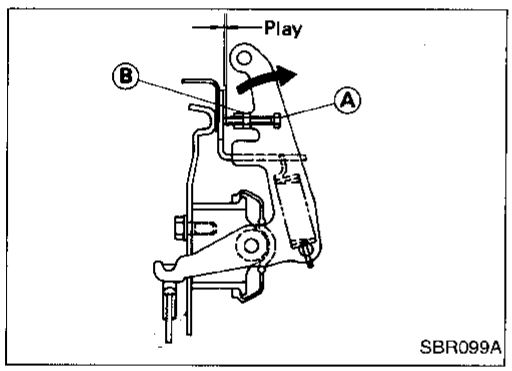

LT30A model

- After installing crank lever on back plate, make sure that there is no play between crank lever and back plate. If play exists, adjust bolt Ⓐ and lock nut Ⓑ.

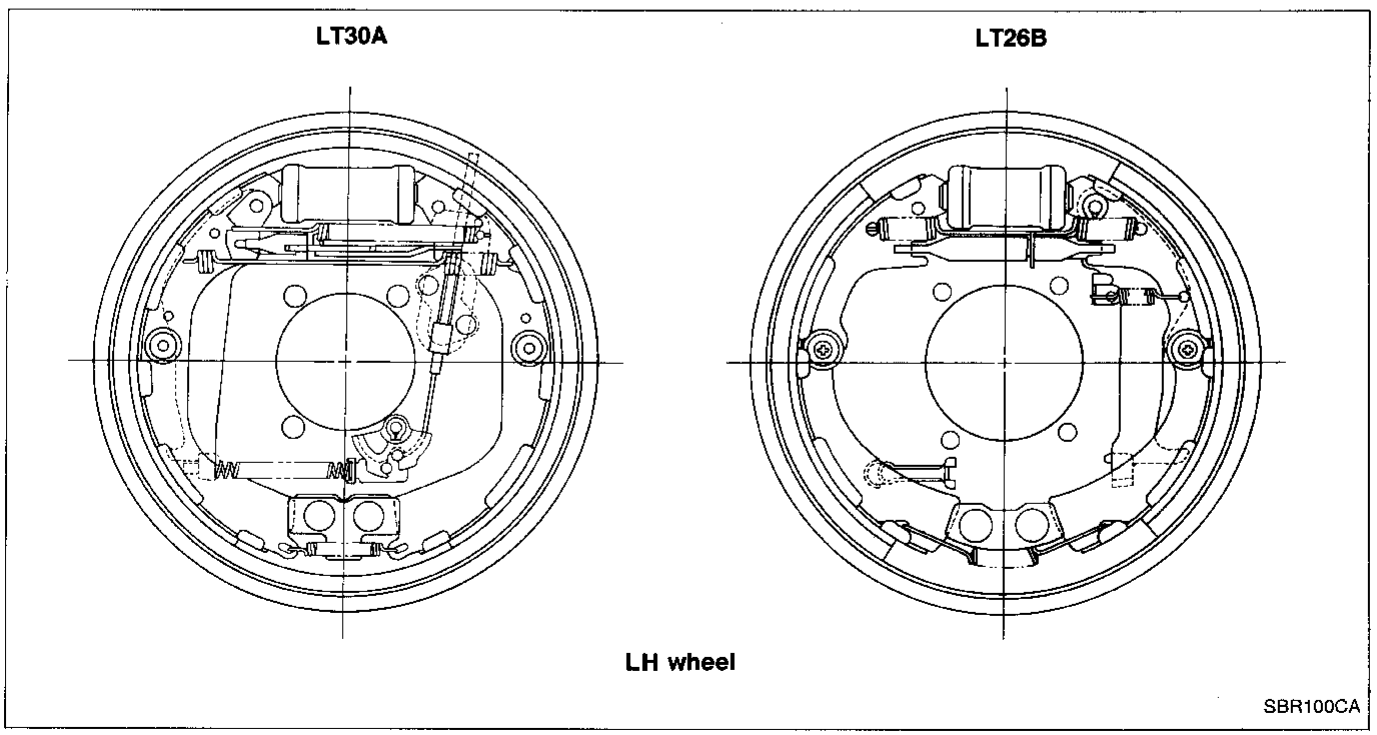

2WD

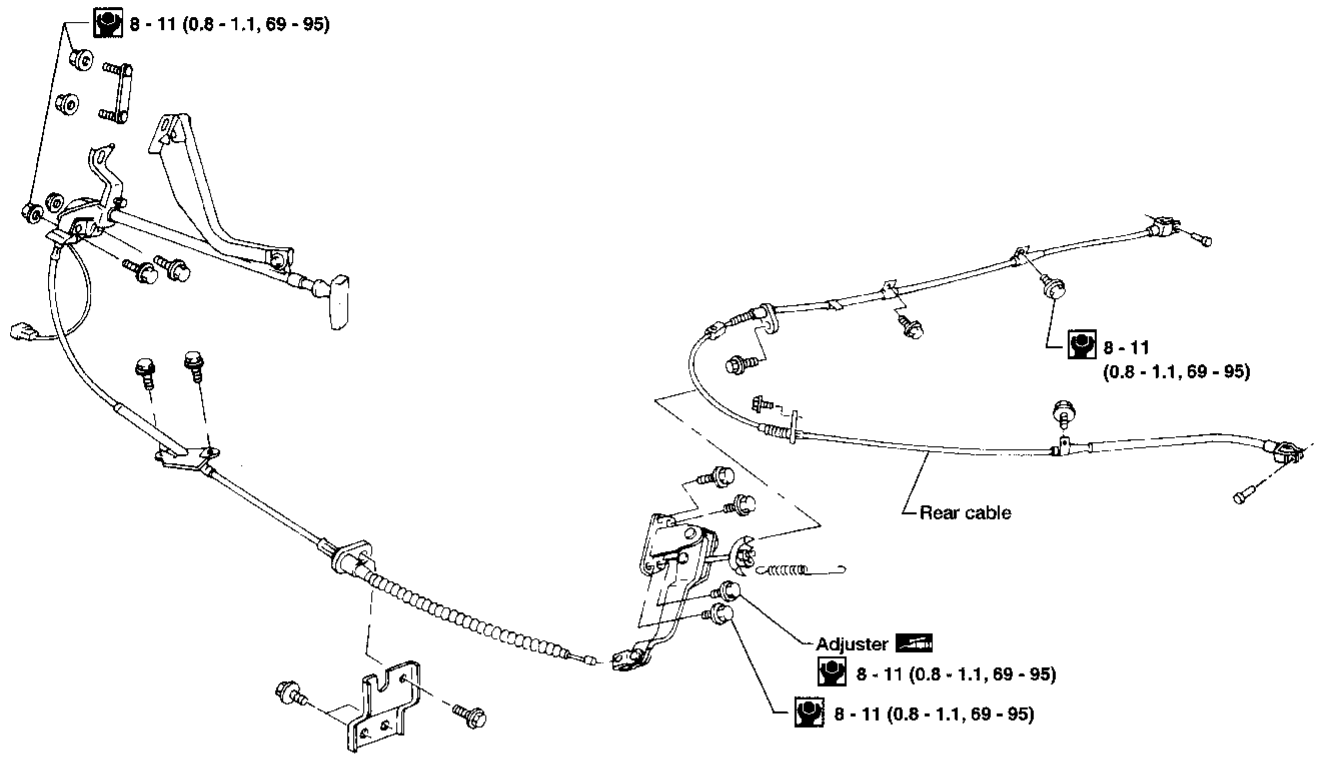

4WD

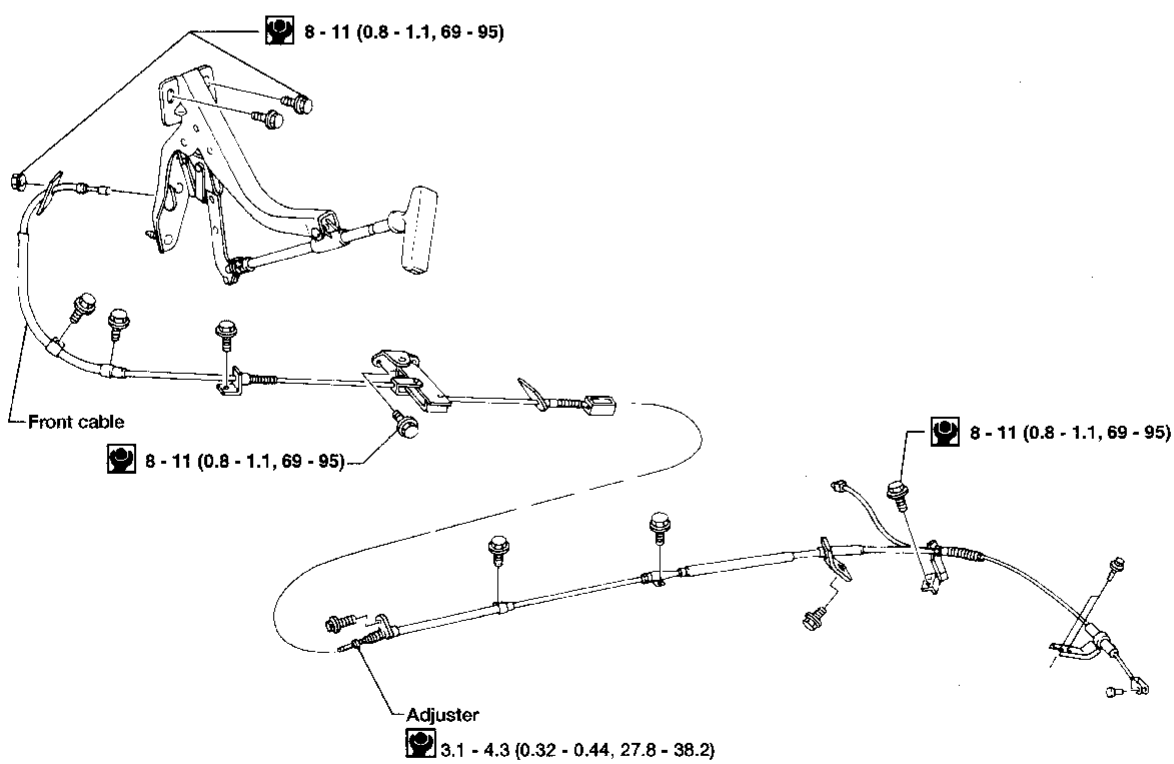

: N·m (kg-m, in-lb)

ABR411

Removal and Installation

- Be careful not to damage cable.
- Make sure there is no free play after installation.

Inspection

1. Check control lever for wear and damage. Replace if necessary.
2. Check wires for discontinuity and deterioration. Replace if necessary.
3. Check warning lamp and switch. Correct if necessary.
4. Check part at each connecting portion and, if found deformed or damaged, replace.

Adjustment

Adjust parking brake as follows:

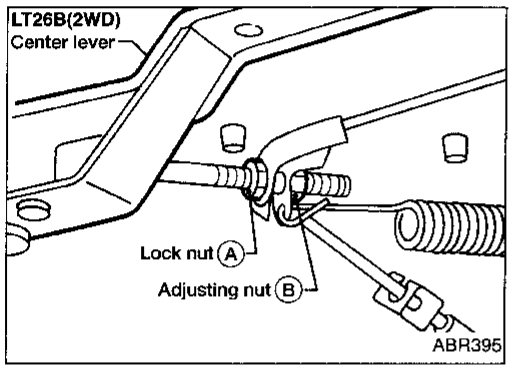

— LT26B —

1. Pull parking brake lever several times until clicking sound does not occur from rear brakes.
2. Release parking brake lever.
3. Loosen lock nut Ⓐ, rotate adjusting nut Ⓑ.
4. Tighten lock nut Ⓐ.
5. Pull control lever with specified amount of force. Check lever stroke and ensure smooth operation.
   Number of notches: Refer to SDS, BR-51

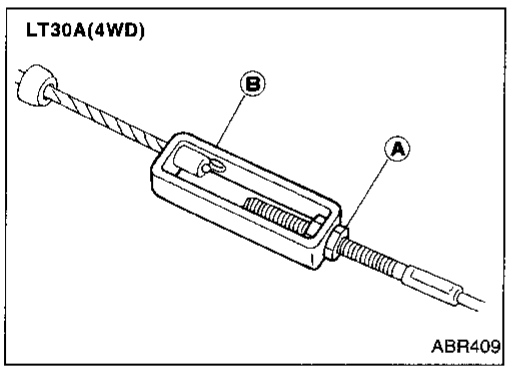

— LT30A —

1. Release parking brake lever.
2. Depress brake pedal fully at least 10 times.
3. Loosen lock nut Ⓐ, rotate adjuster Ⓑ.
4. Tighten lock nut Ⓐ.
5. Pull control lever with specified amount of force. Check lever stroke and ensure smooth operation.
   Number of notches: Refer to SDS, BR-51.

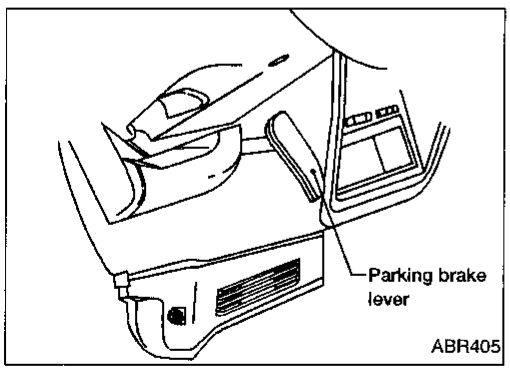

Purpose

The Rear Wheel Anti-Lock Brake System (ABS) consists of electronic and hydraulic components. It controls rear braking force so locking of the rear wheels can be avoided.
The ABS:
1) Improves proper tracking performance during severe braking.
2) Eases obstacle avoidance during severe braking.
3) Improves vehicle stability.

Operation

- When the vehicle speed is less than 10 km/h (6 MPH) this system does not work.
- The Rear Wheel Anti-Lock Brake System (ABS) has self-test capabilities. The system turns on the ABS warning lamp for a few seconds each time the ignition switch is turned ON. After the engine is started, the ABS warning lamp turns off. The system performs a circuit check when the ignition switch is first turned ON. If a malfunction is found during this check, the ABS warning lamp will stay on.
- While driving, a mechanical noise may be heard and slight pedal pulsation may be felt during ABS operation. This is a normal condition.

CAUTION:
When driving in 4WD, the rear wheel anti-lock brake system is not effective in most cases. The rear wheels will lock if the front wheels lock because the transfer mechanically couples the front and rear axles together. If this happens, the rear wheel anti-lock brake system may not function but the ordinary brakes will operate normally. The ABS warning lamp will then turn on. The above condition is not a malfunction and the rear wheel anti-lock brake system can be re-activated by starting the engine again. The ABS warning lamp will then go off.

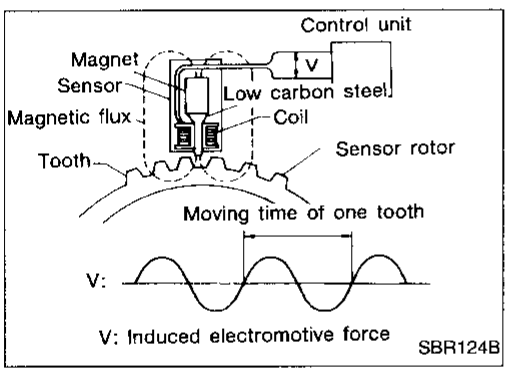

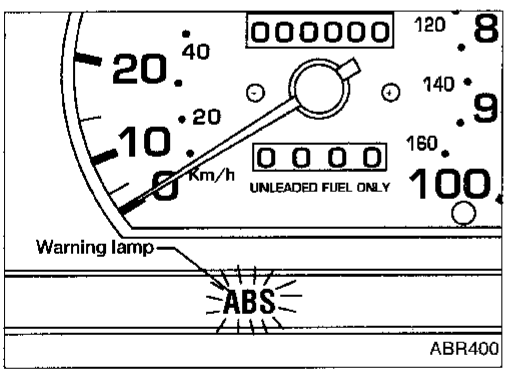

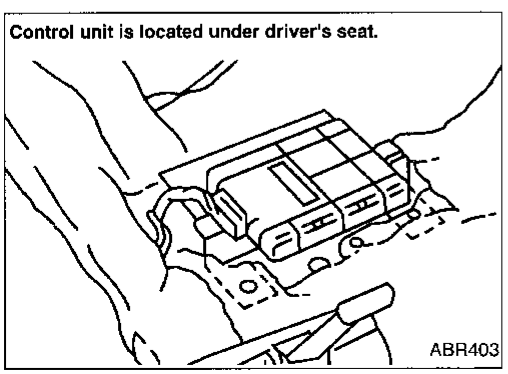

System Description

REAR SENSOR

The rear sensor unit consists of a gear-shaped sensor rotor and a sensor unit. The sensor unit consists of a bar magnet around which a coil is wound. The sensor rotor is installed on the companion flange and the sensor unit is installed on the rear axle housing. A sine-wave current is generated by the rear sensor unit as the rear axle pinion rotates. The frequency and voltage increase as the rotating speed increases.

ABS CONTROL UNIT

The ABS control unit computes the rear axle pinion rotating speed by reading the signal from the rear sensor unit. Then it supplies a DC current to the ABS actuator. If any electrical malfunction is detected in the system, the ABS control unit causes the ABS warning lamp to turn on. In this condition, the ABS system will be deactivated by the ABS control unit, and the vehicle's brake system reverts to normal operation.

System Components

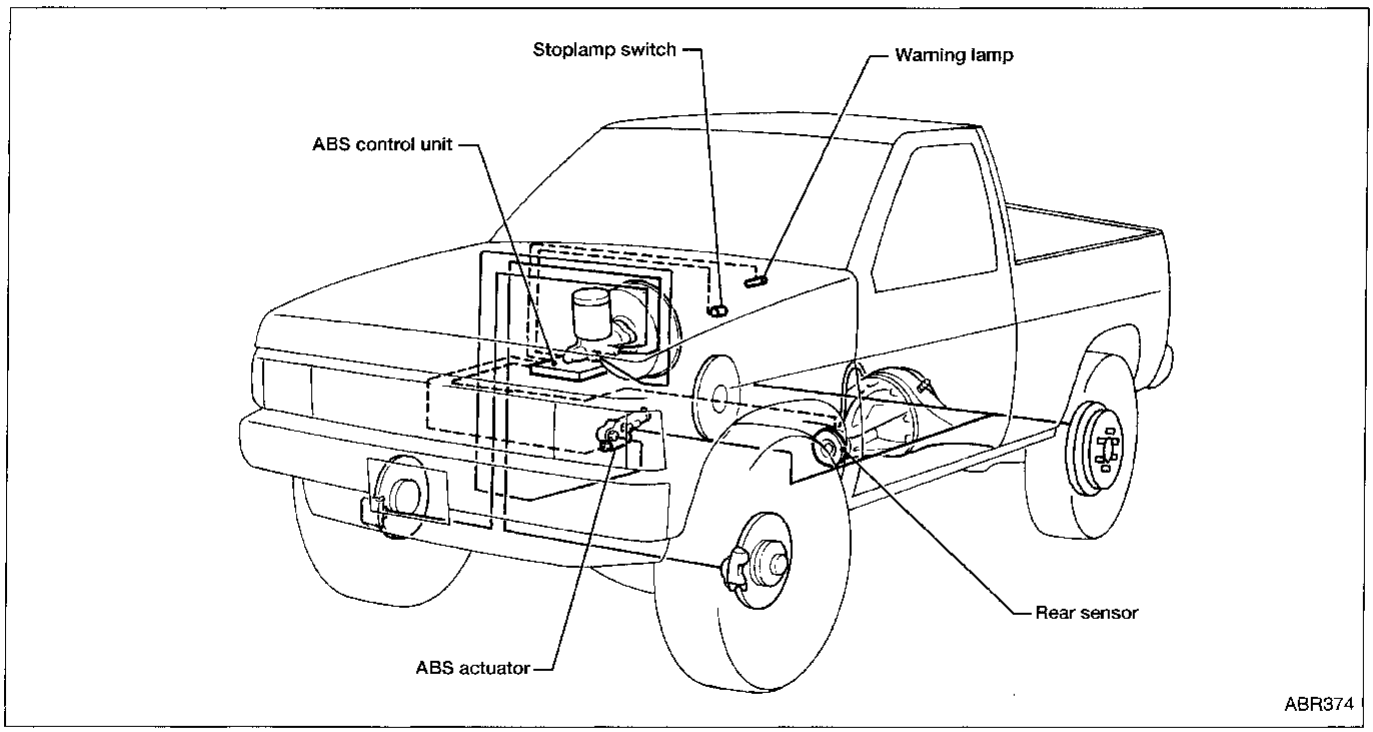

Hydraulic Circuit

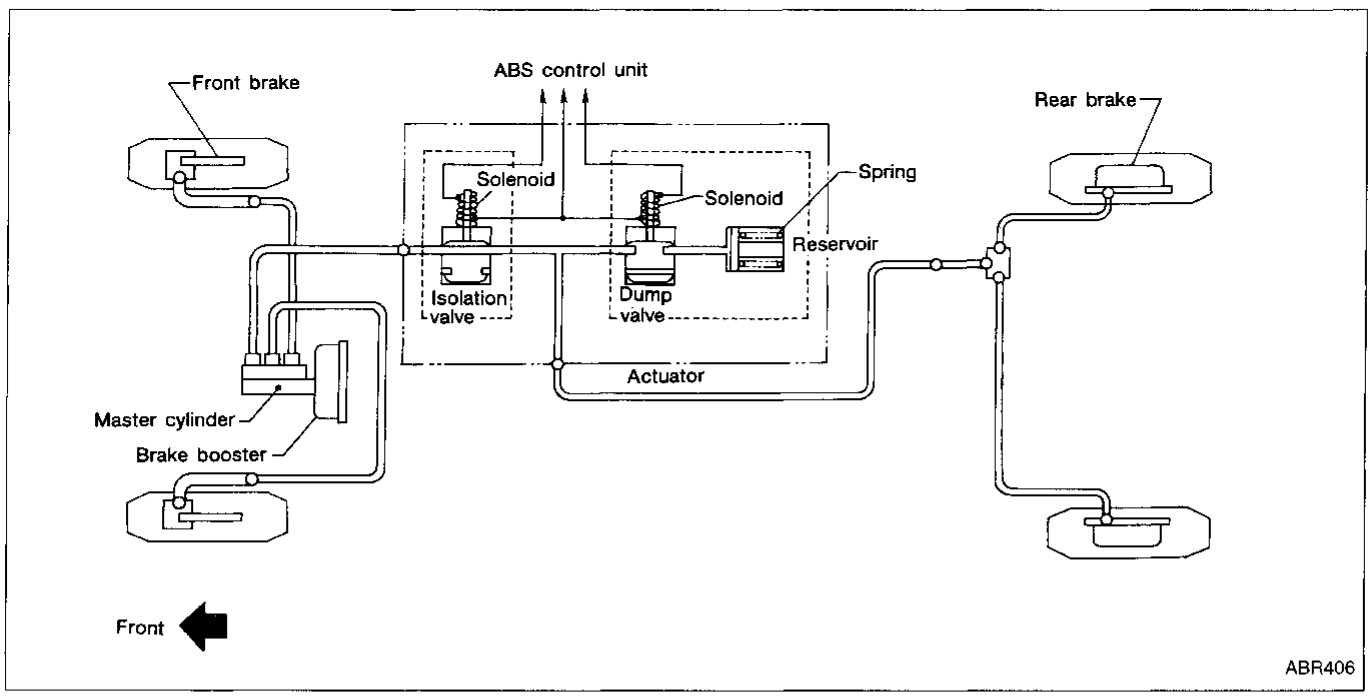

Removal and Installation

CAUTION:
Be careful not to damage sensor edge and sensor rotor teeth. In case the final drive assembly needs to be removed, disconnect the ABS sensor from the assembly and move it away. Failure to do so may result in damage to the sensor wires making the sensor inoperative.

REAR SENSOR AND CONTROL UNIT

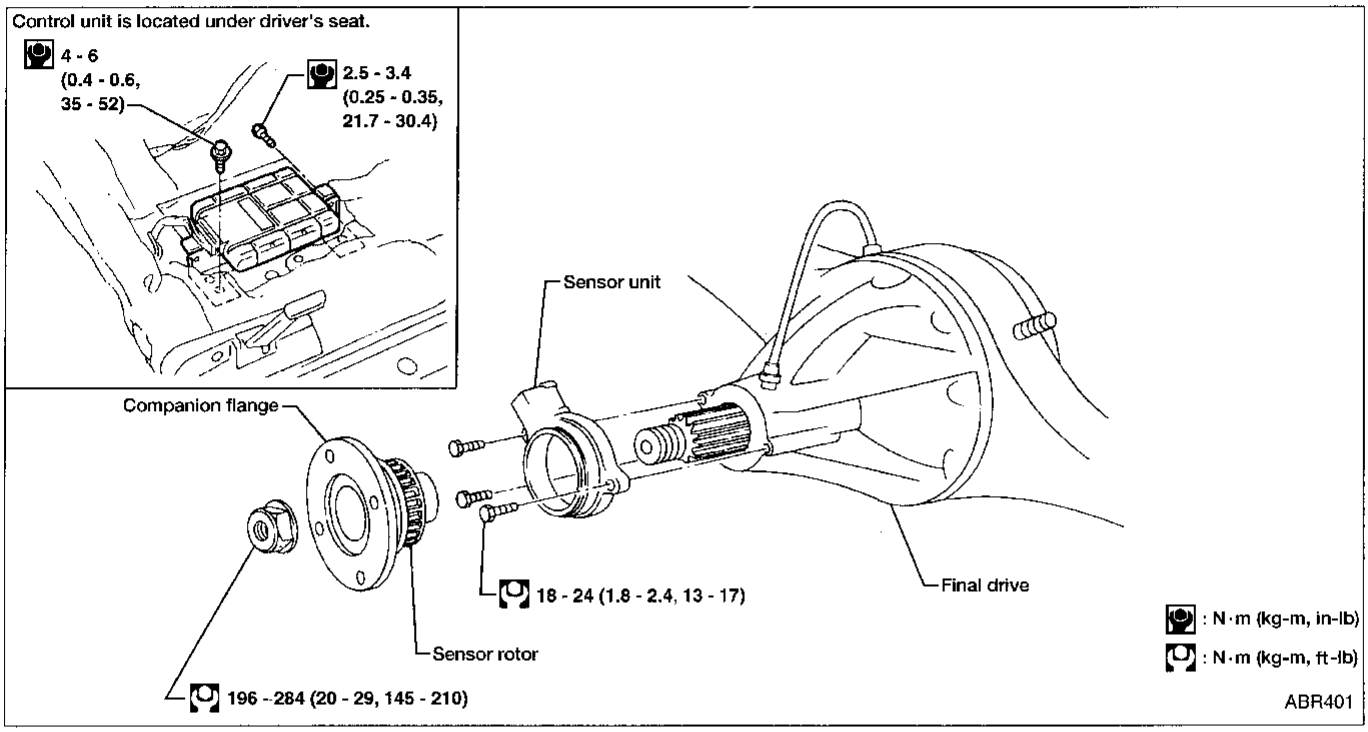

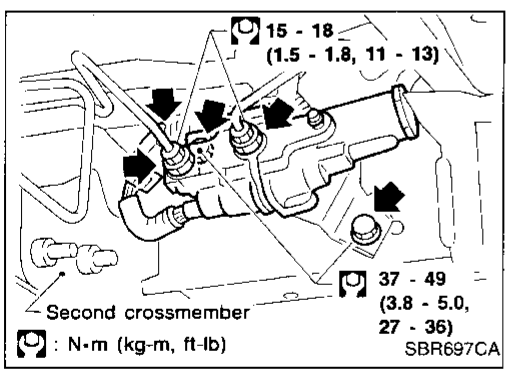

ACTUATOR

Removal

1. Disconnect battery cable.
2. Drain brake fluid.
   Refer to "Changing Brake Fluid", "CHECK AND ADJUSTMENT", BR-4.
3. Disconnect connectors, brake pipes and remove fixing nuts.

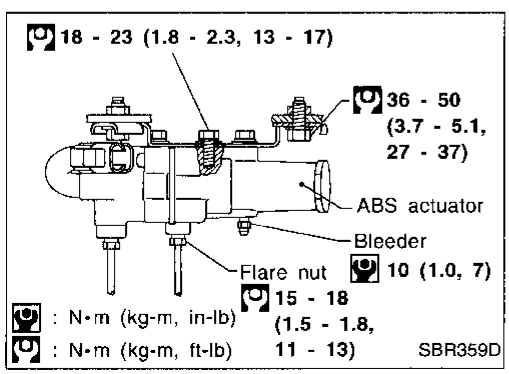

Installation

CAUTION:
After installation, refill brake fluid. Then bleed air. Refer to "Bleeding Procedure", BR-5.

1. Connect brake pipes temporarily.
2. Secure fixing bolts.
3. Torque brake pipe flare nuts.
4. Connect connectors and battery cable.

How to Perform Trouble Diagnoses for Quick and Accurate Repair

WORK FLOW

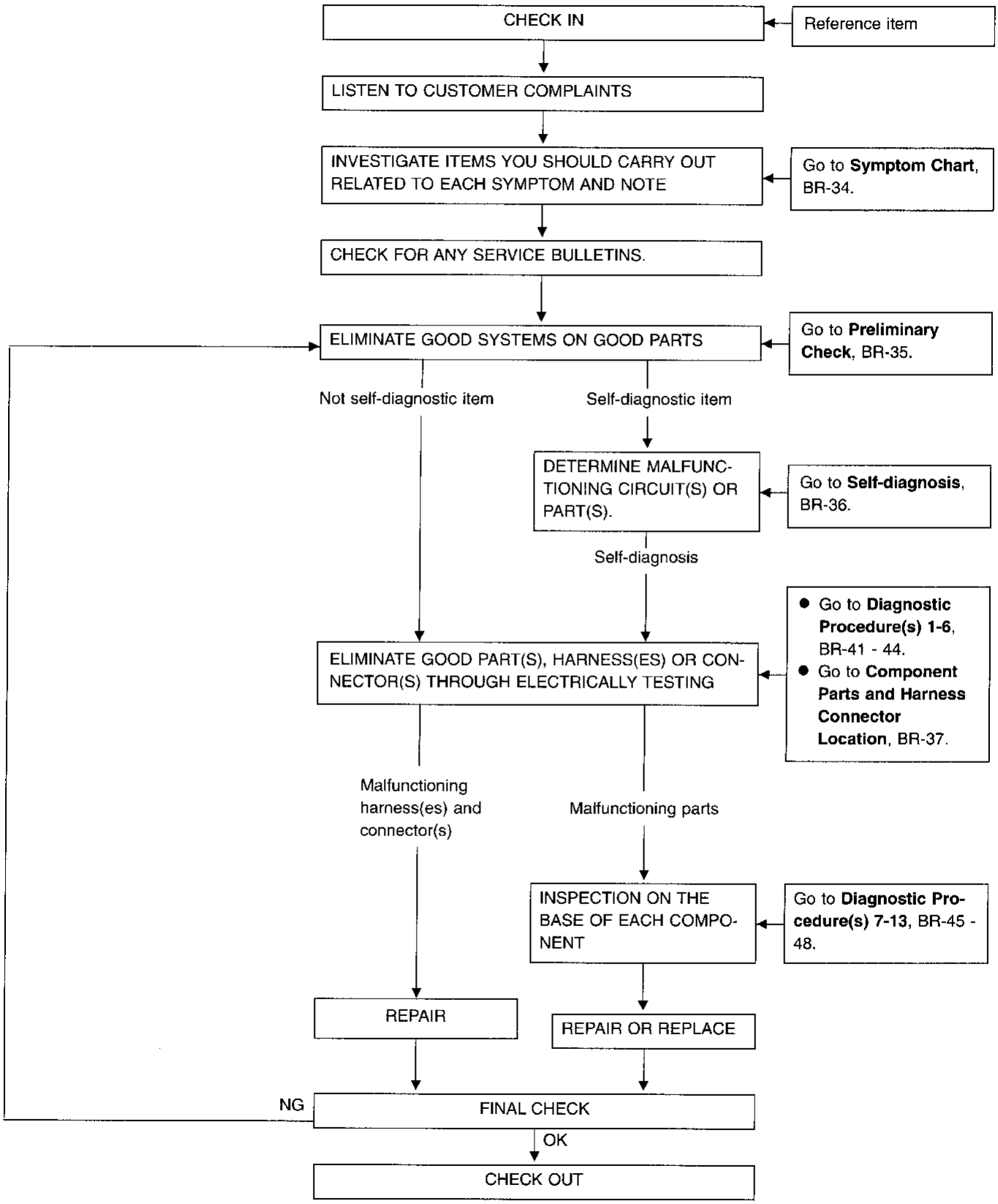

Symptom Chart

PROCEDURE	REFERENCE PAGE	SYMPTOM	Pedal vibration or noise.	Long stopping distance.	Brake pedal stroke is large.	ABS does not work.	ABS works frequently.
Electrical Compo-nents Inspection	BR-49	Rear sensor unit and ABS actuator				○	
Diagnostic Procedure (Select inspection with LED flashing No.)	BR-48	Warning flashing 5	○	○	○	○	○
	BR-47	Warning flashing 13,14 or 15	○	○	○	○	
	BR-47	Warning flashing 6	○	○	○	○	
	BR-47	Warning flashing 9 or 10	○	○	○	○	
	BR-46	Warning flashing 3 or 8	○	○	○	○	
	BR-45	Warning flashing 4	○	○	○	○	
	BR-45	Warning flashing 2 or 7	○	○	○	○	
Diagnostic Procedure	BR-44	Diagnostic Procedure 6				○	
	BR-43	Diagnostic Procedure 5					○
	BR-42	Diagnostic Procedure 4				○	
	BR-41	Diagnostic Procedure 3			○		
	BR-41	Diagnostic Procedure 2		○			
	BR-41	Diagnostic Procedure 1	○				
Preliminary Check	BR-35	Preliminary Check 2				○	
	BR-35	Preliminary Check 1				○	

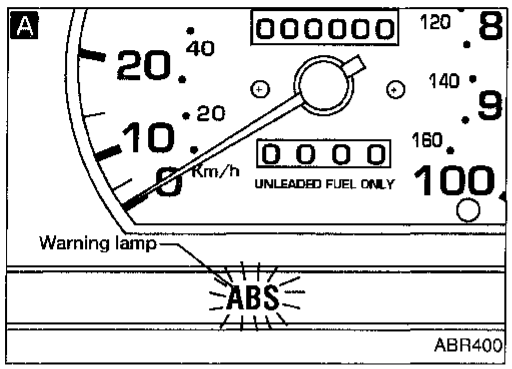

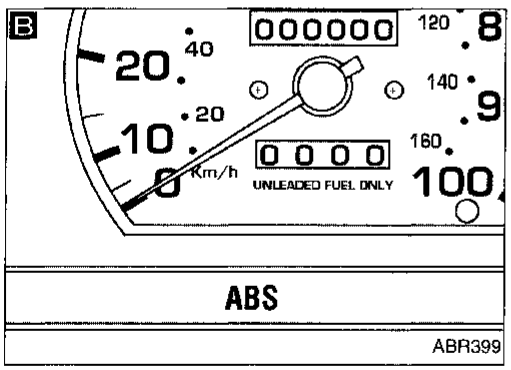

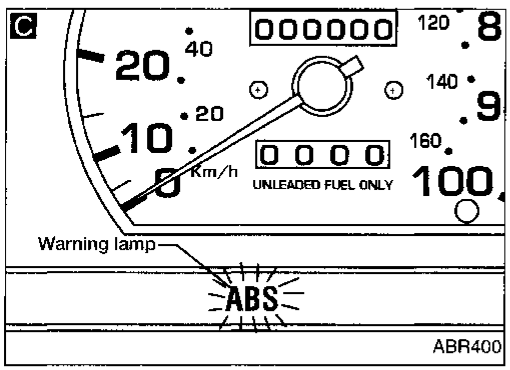

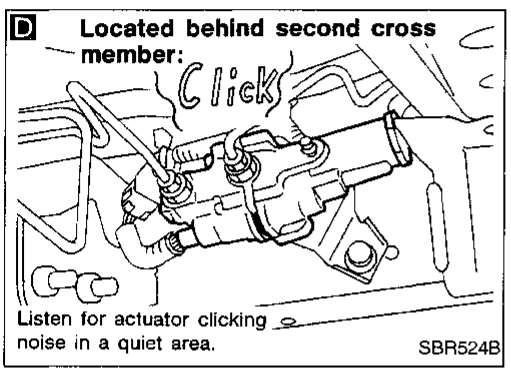

Preliminary Check 1

A

1. Turn ignition switch ON.
2. Check warning lamp activation.
   When ignition switch is turned on, warning lamp should turn on.

No → Go to **Diagnostic Procedure 6**, BR-44. If OK, replace ABS control unit.

Yes ↓

B

Check warning lamp deactivates within a few seconds.

No → Go to **Preliminary Check 2** below.

Yes ↓

C

Check warning lamp reactivation.

Yes → Go to **Preliminary Check 2** below.

No ↓

1. Drive vehicle with 2WD for 1 minute or more at 40 km/h (25 MPH) or more.
2. Check warning lamp reactivation.

Yes → Go to **Preliminary Check 2** below.

No ↓

D

1. Stop engine.
2. Turn ignition switch ON.
   Check actuator clicking noise, when warning lamp turns off.

OK → Self-operating function is OK.

NG ↓

Check actuator. Refer to BR-49.

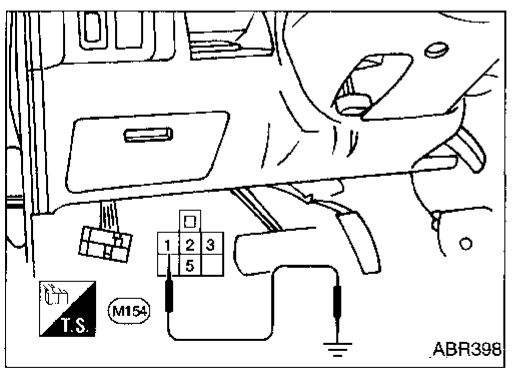

Preliminary Check 2

1. Start engine.
2. Ground the check terminal of check connector.
3. Check the warning lamp flashing.

No → Check brake fluid level. Go to **Diagnostic Procedure 6**, BR-44.

OK ↓

Replace ABS control unit.

Yes ↓

Count the number of flashes. Go to **Self-diagnosis**, BR-36.

Self-diagnosis

CHECKING THE NUMBER OF WARNING LAMP FLASHES

When a problem occurs in the ABS, the ABS warning lamp on the instrument panel turns on. As shown in the table, the control unit performs self-diagnosis.
To obtain satisfactory self-diagnosing results, the vehicle must be driven in 2WD above 40 km/h (25 MPH) for at least one minute before the self-diagnosis is performed. After the vehicle has been stopped, the number of ABS warning lamp flashes is counted by grounding the check terminal, with the engine running, thereby identifying a malfunctioning part or unit by the number of flashes.
If more than two parts or units malfunction at the same time, the ABS warning lamp will flash to indicate one of the malfunctioning parts or units. After the part or unit has been repaired, the ABS warning lamp will then flash to indicate that the other part or unit is malfunctioning.

No. of warning lamp flashes	Detected items	Malfunctioning cause or part		Diagnostic Procedure
2	ABS actuator	ISO solenoid	Open	Diagnostic Procedure 7
7			Short circuit	Diagnostic Procedure 7
4			Blocked	Diagnostic Procedure 8
3		DUMP solenoid	Open	Diagnostic Procedure 9
8			Short circuit	Diagnostic Procedure 9
9	Rear sensor	Open		Diagnostic Procedure 10
10		Short circuit		Diagnostic Procedure 10
6		Erratic		Diagnostic Procedure 11
13, 14 or 15	ABS control unit	—		Diagnostic Procedure 12
5	Other			Diagnostic Procedure 13

CAUTION:
When driving in 4WD, the rear wheel anti-lock brake system is not effective in most cases. The rear wheels will lock if the front wheels lock because the transfer mechanically couples the front and rear axles together. If this happens, the rear wheel anti-lock brake system may not function but the ordinary brakes will operate normally. The ABS warning lamp will then turn on. The above condition is not a malfunction and the rear wheel anti-lock brake system can be re-activated by starting the engine again. The ABS warning lamp will then go off.

Component Parts and Harness Connector Location

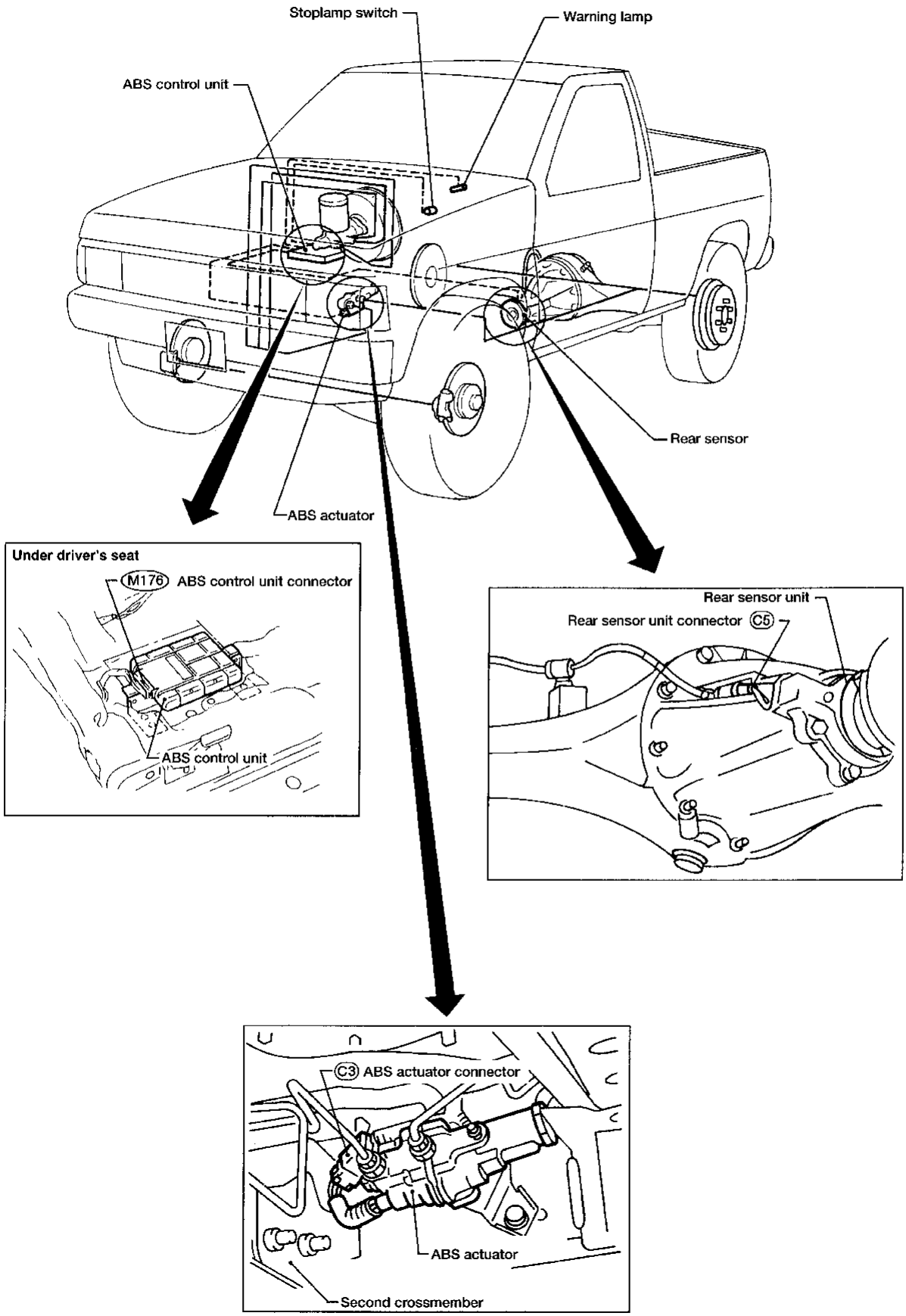

ABR402

Circuit Diagram

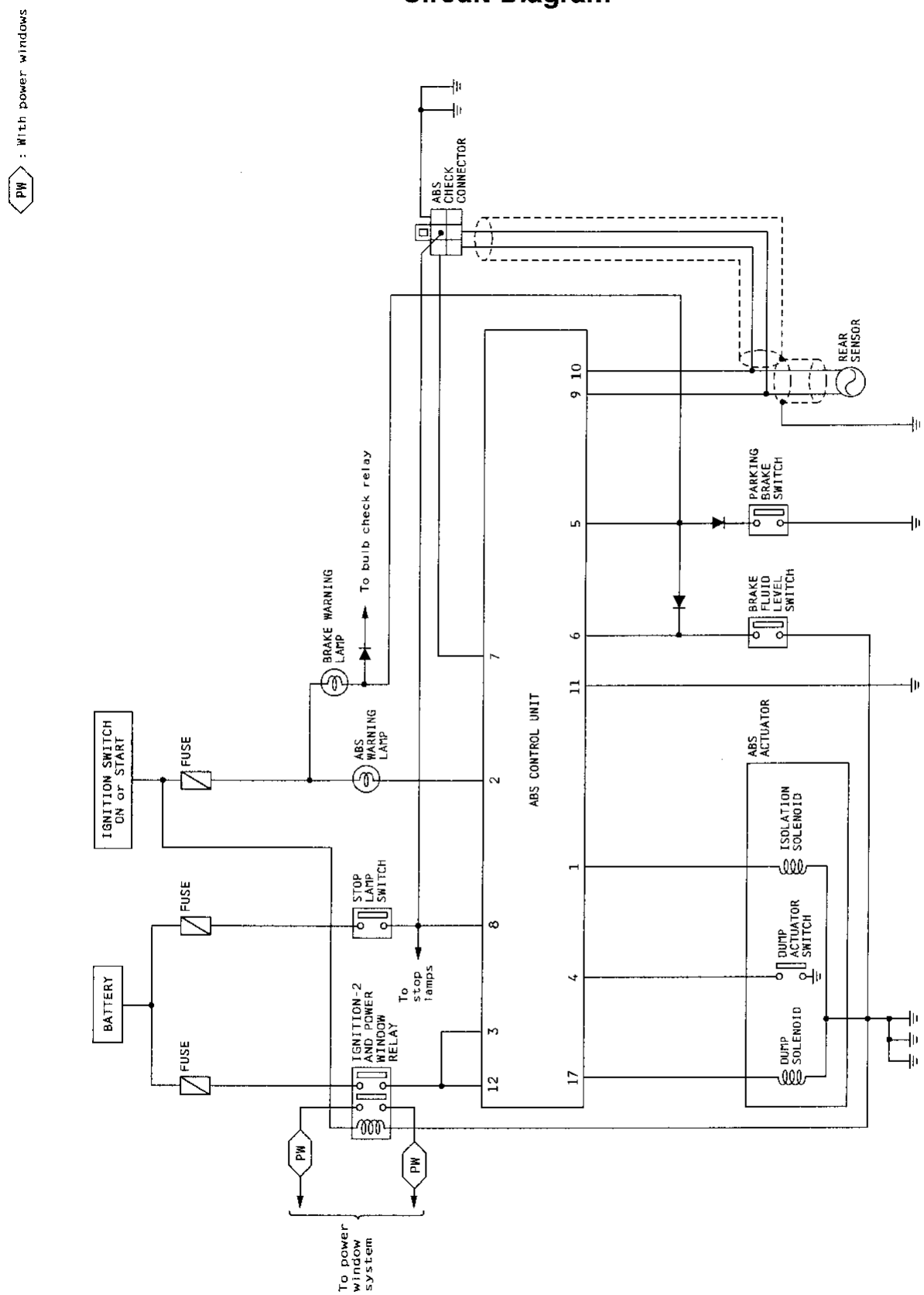

ABR360

Wiring Diagram –ABS–

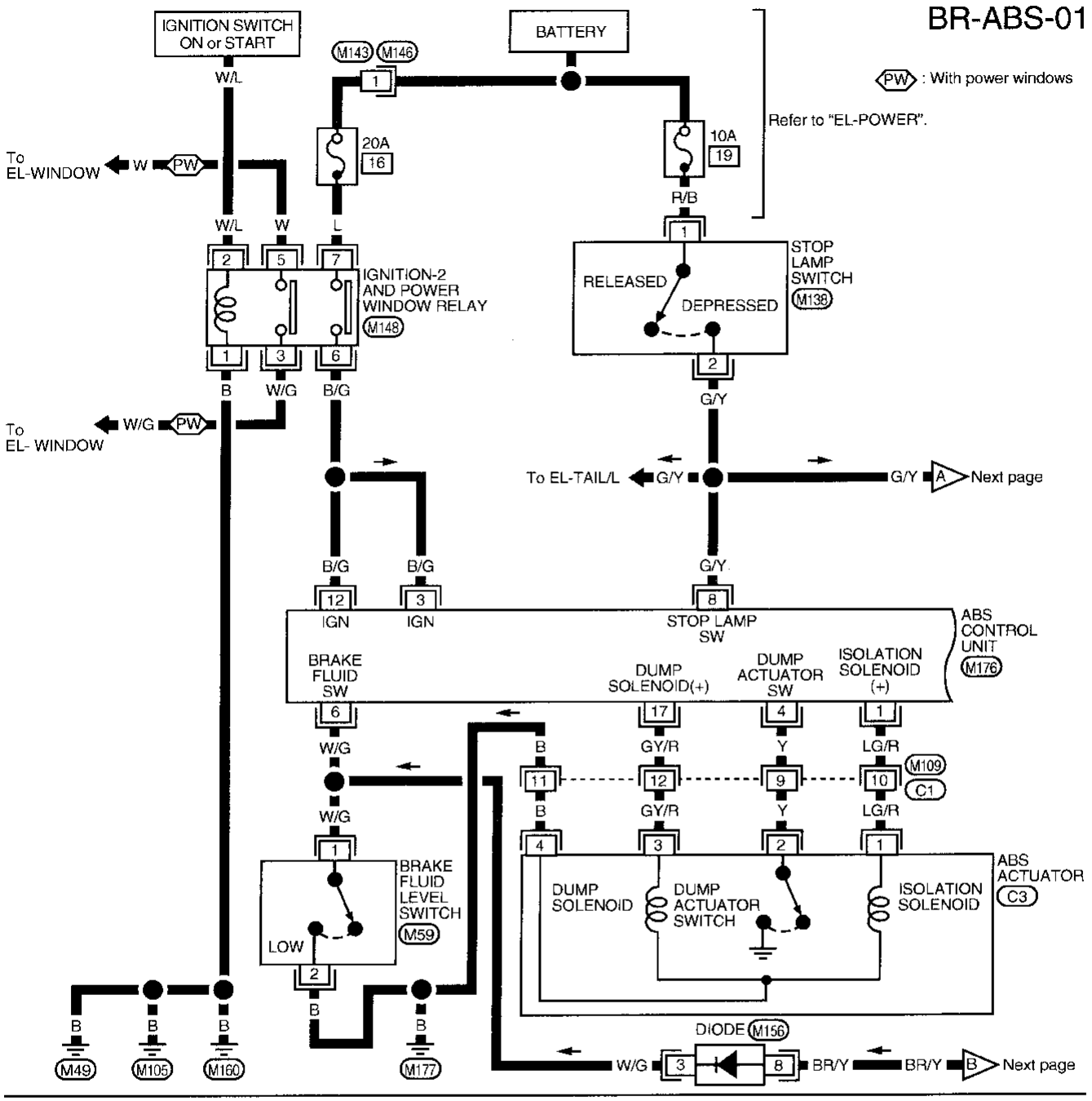

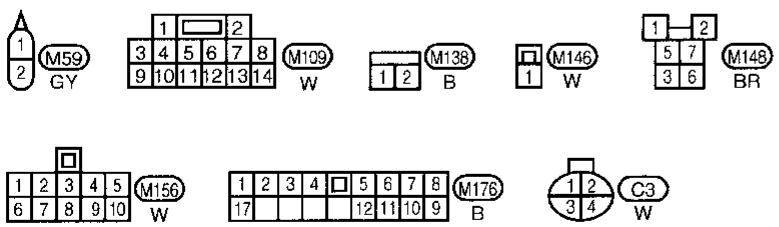

ABR485

Wiring Diagram –ABS– (Cont'd)

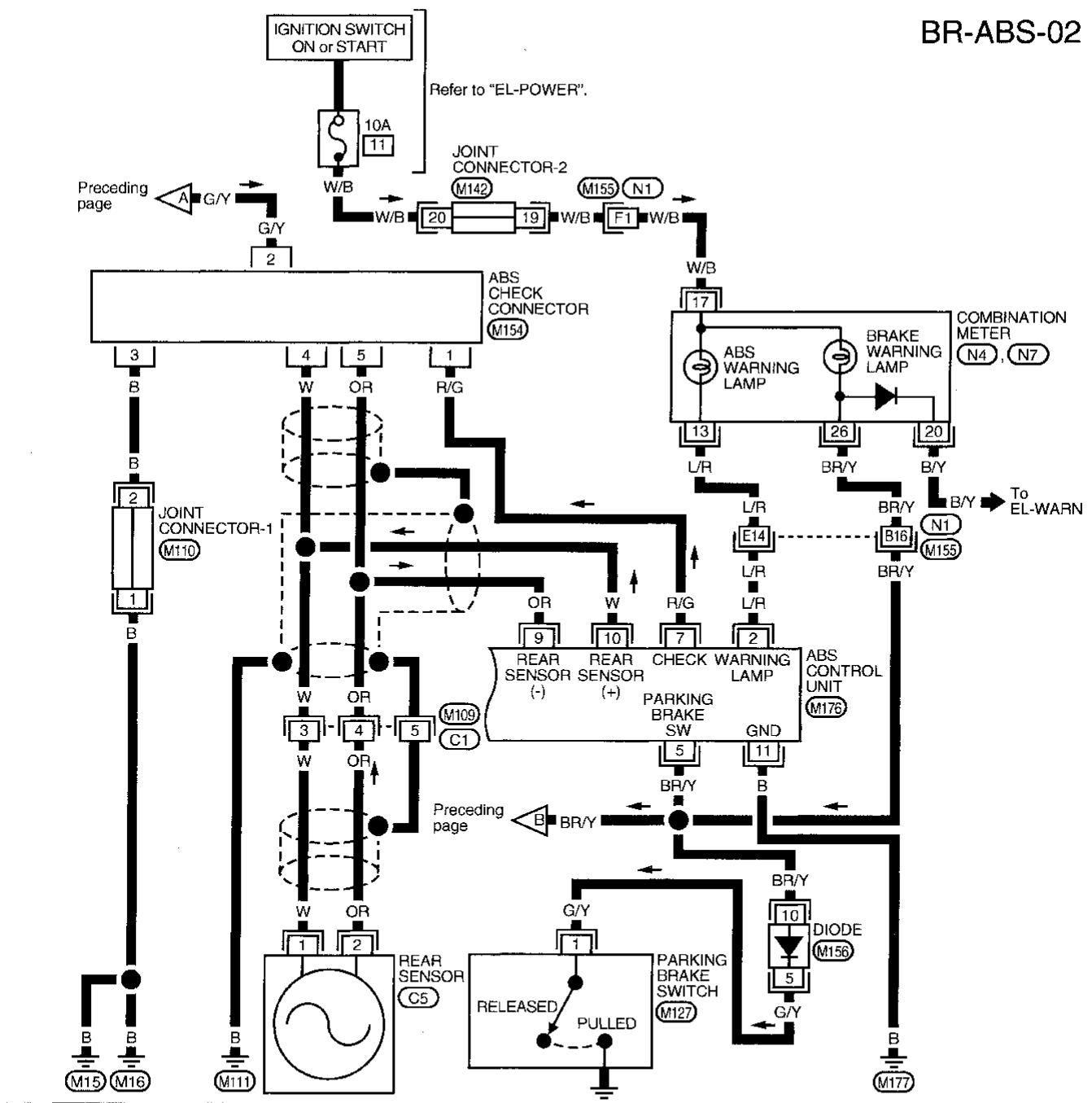

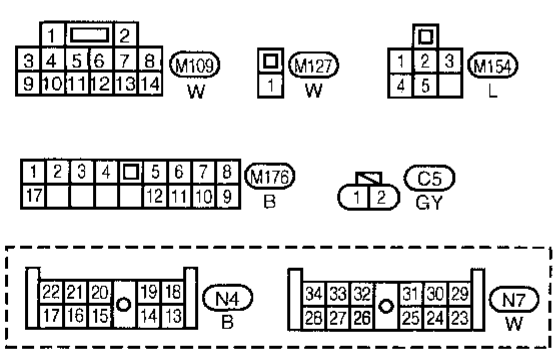

Refer to last page (Foldout page).
M110
M142
M155, N1

ABR361-B

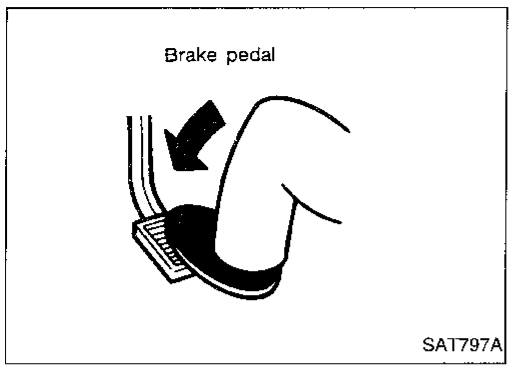

Diagnostic Procedure 1

SYMPTOM: Pedal vibration or noise

Check whether the symptom appears only when brake is applied suddenly. — Yes → When brake is suddenly applied, ABS works and produces pedal vibration or noise.

No ↓

Check whether the noise only appears and warning lamp only activates and deactivates when the ignition switch is turned on. — Yes → Self-operation of ABS functions properly.

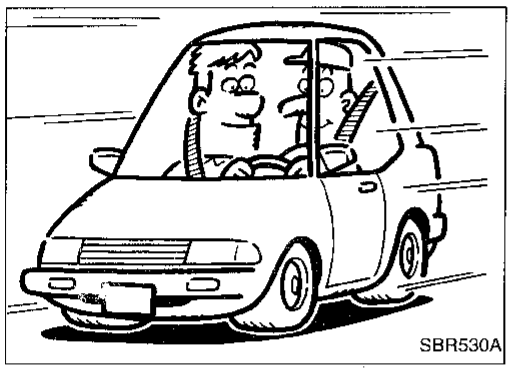

Diagnostic Procedure 2

SYMPTOM: Long stopping distance
Refer to worksheet results.

Check if road condition is slippery with snow or gravel. — Yes → Stopping distance may be longer than vehicles which are not equipped with ABS.

No ↓

Disconnect ABS actuator connector and check whether stopping distance is still long. — No → Connect ABS actuator connector.
Go to **Preliminary Check 1 and 2**, BR-35.
Go to **Self-diagnosis**, BR-36.

Yes ↓

Perform usual brake inspection and air bleeding.

Diagnostic Procedure 3

SYMPTOM: Brake pedal stroke is large.

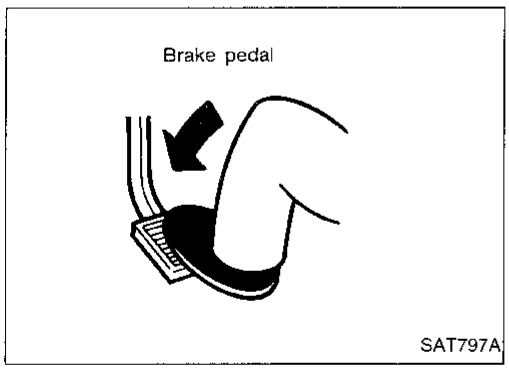

Check whether the symptom usually appears. — No → Vehicles equipped with ABS may have a tendency to increase pedal stroke during operation.

Yes ↓

Check for accumulation of air by trying to bleed air. — No → Perform brake inspection. Refer to BR-19.

Diagnostic Procedure 4

SYMPTOM: ABS does not work.

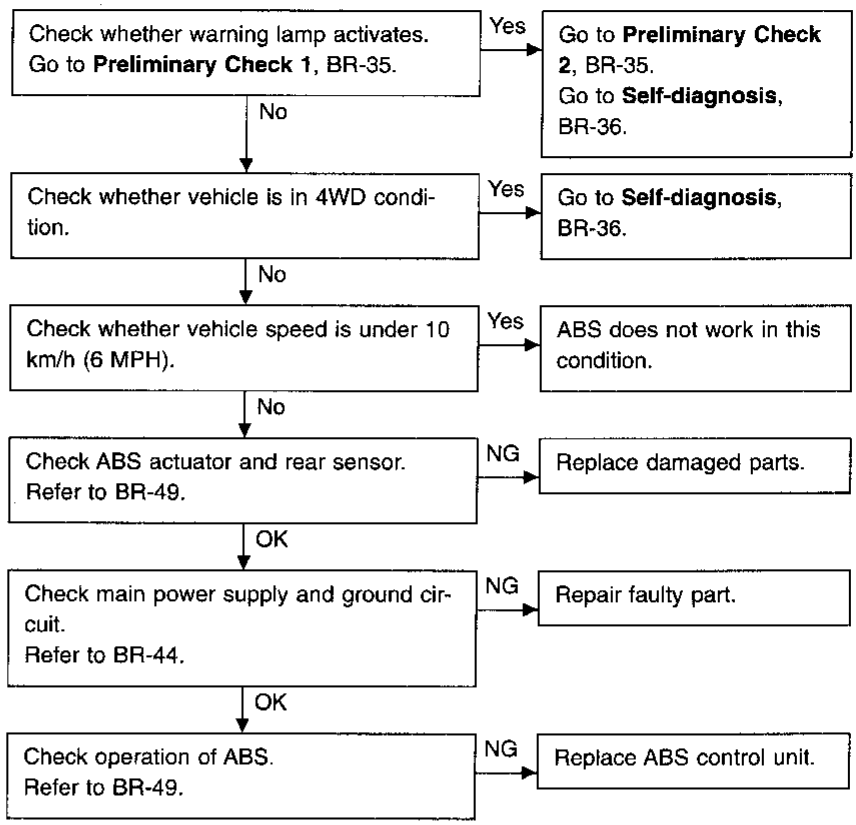

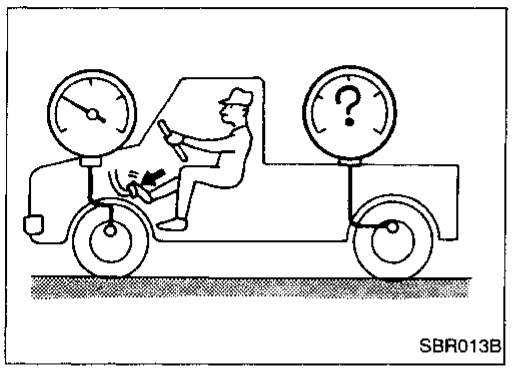

Diagnostic Procedure 5

SYMPTOM: ABS works frequently.

CHECK BRAKE FLUID PRESSURE.
Check whether brake fluid pressure distribution is normal.
Refer to BR-8 or BR-10.

NG → Replace master cylinder.

OK ↓

Perform usual brake inspection.

NG → Repair.

OK ↓

When wheel lock occurs frequently due to hard braking operation, the ABS operates at each occurrence of wheel lock. Accordingly, frequent ABS operation is normal under severe braking conditions where wheel lock would occur frequently due to braking.

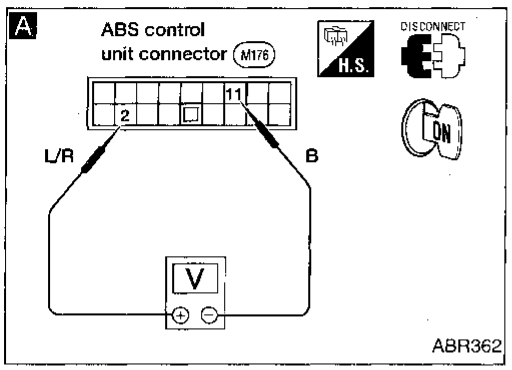

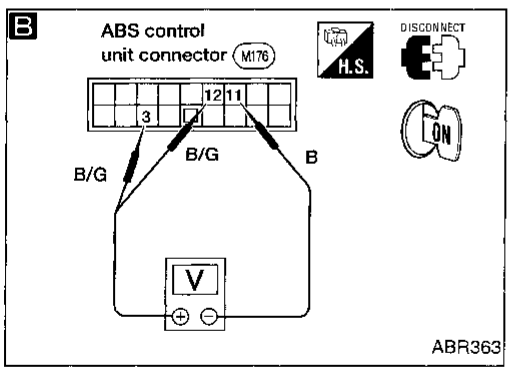

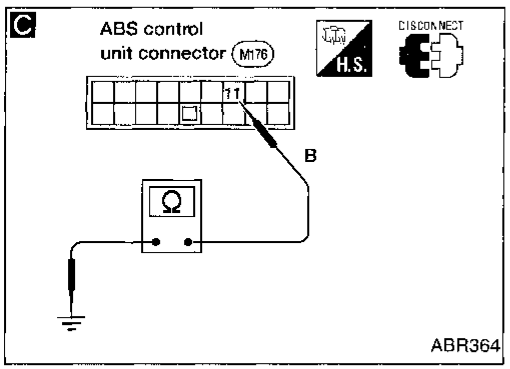

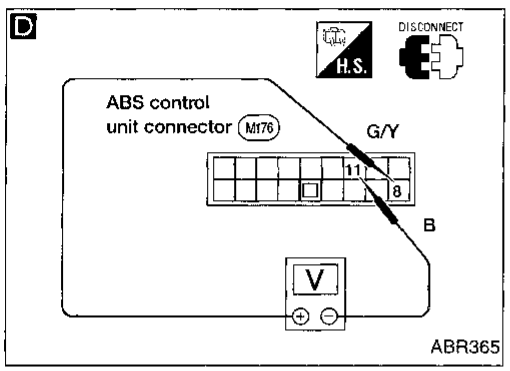

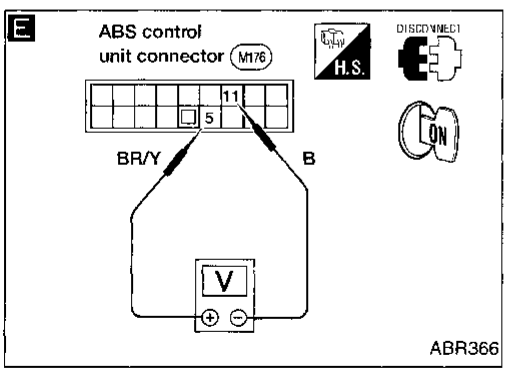

Diagnostic Procedure 6

MAIN POWER SUPPLY AND GROUND CIRCUIT (Not self-diagnostic item)

A

CHECK WARNING LAMP POWER SUPPLY.
1. Connect battery cable and confirm battery voltage is 12V.
2. Disconnect ABS control unit connector.
3. Turn ignition switch ON.
4. Do approx. 12 volts exist between ABS control unit connector terminals ② and ⑪?

No → **C**

CHECK GROUND CIRCUIT.
Check harness continuity, between ABS control unit terminal ⑪ and suitable body ground.
Continuity should exist.

OK → Check and replace fuse, warning lamp or relays if necessary. Repair ignition harness, relay and warning lamp connectors.

NG → Repair harness or connectors.

Yes ↓

B

CHECK ABS RELAY POWER SUPPLY.
1. Turn ignition switch ON.
2. Do approx. 12 volts exist between ABS control unit connector terminals ⑫, ③ and ⑪?

No → Check and replace fuse, ABS relay, or repair harness and connectors.

Yes ↓

D

CHECK STOP LAMP SWITCH POWER SUPPLY.
1. Depress brake pedal.
2. Do approx. 12 volts exist between ABS control unit connector terminals ⑧ and ⑪?

No → Adjust stop lamp switch if necessary. Replace stop lamp switch, if necessary or repair harness or connectors.

Yes ↓

E

CHECK PARKING BRAKE POWER SUPPLY.
1. Confirm that brake fluid level is adequate.
   If necessary, refill it.
2. Turn ignition switch ON.
3. Do approx. 12 volts exist between ABS control unit connector terminals ⑤ and ⑪ without parking brake applied?
   Do approx. 0 volts exist with parking brake applied?

No → Adjust parking brake switch, if necessary. Replace parking brake switch, if necessary or repair harness or connector.

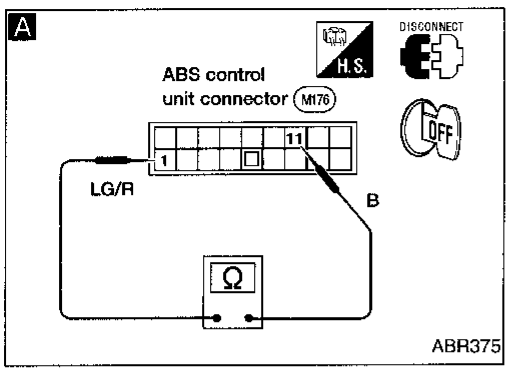

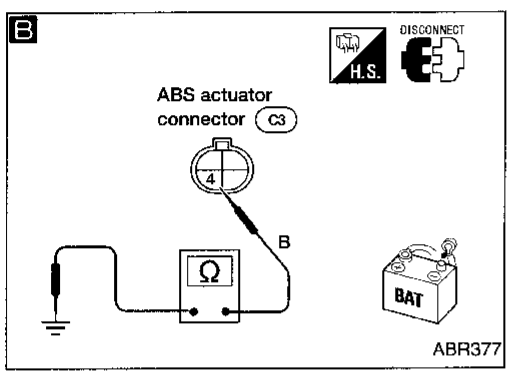

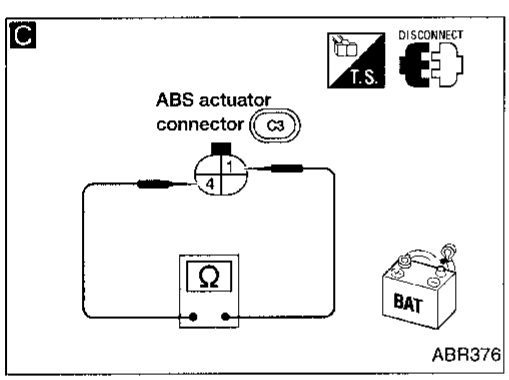

Diagnostic Procedure 7

ABS ACTUATOR ISO SOLENOID SHORT CIRCUIT OR OPEN (Warning lamp flashing number 2 or 7)

Remove battery negative terminal connector.

↓

A

CHECK ISO SOLENOID.
Check resistance between ABS control unit connector terminals ① and ⑪.
Resistance: Approximately 4Ω

OK → Replace ABS control unit.

↓ NG

CHECK ABS CONTROL UNIT GROUND CIRCUIT.
Go to **Diagnostic Procedure 6**, BR-44.

NG → Repair harness or connector.

↓ OK

B

CHECK ABS ACTUATOR GROUND CIRCUIT.
Check harness continuity between ABS actuator terminal ④ and suitable body ground.

OK → Repair harness or connectors.

↓ NG

C

CHECK ISO SOLENOID.
Check resistance between ABS actuator connector terminals ① and ④.
Resistance: Approximately 4Ω

NG → Repair harness and connectors between ISO solenoid and ABS control unit.

↓ OK

Replace ABS actuator.

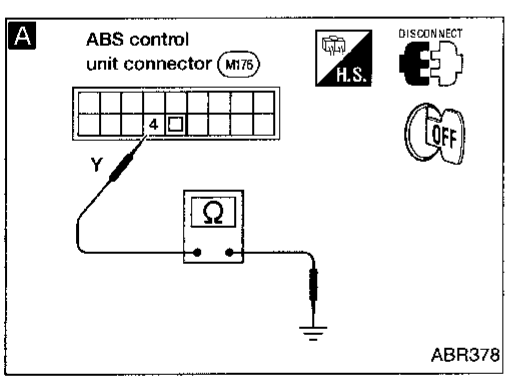

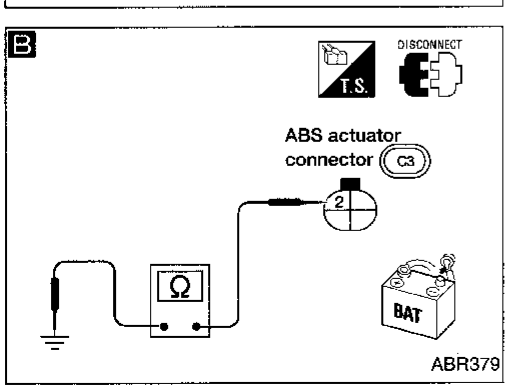

Diagnostic Procedure 8

ABS ACTUATOR ISO SOLENOID BLOCKED (Warning lamp flashing number 4)

Remove battery negative terminal connector.

↓

A

CHECK ABS ACTUATOR SWITCH.
Does continuity exist between ABS control unit terminal ④ and suitable body ground?
Continuity should not exist.

OK → Replace ABS control unit.

↓ NG

B

Does continuity exist between ABS actuator terminal ② and suitable body ground?
Continuity should not exist.

NG → Replace ABS actuator.

↓ OK

Repair harness and connectors between ABS actuator and ABS control unit.

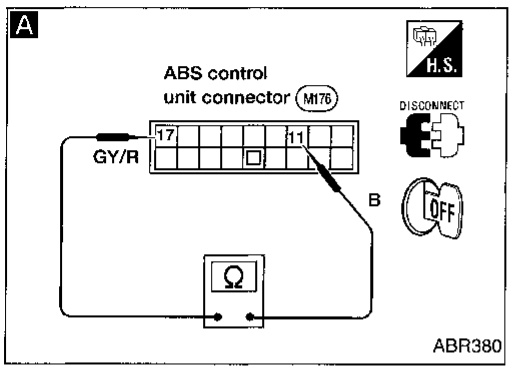

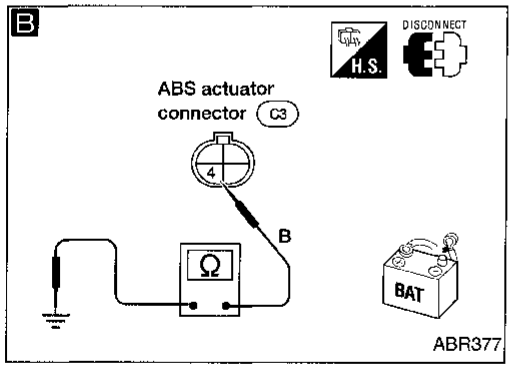

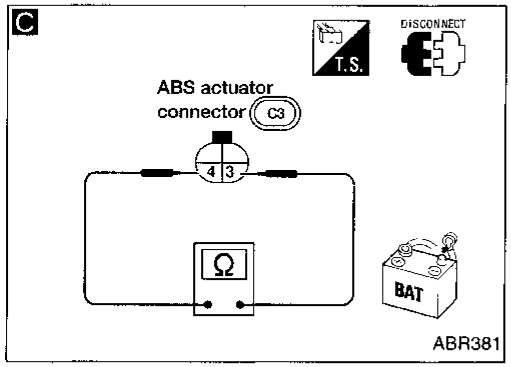

Diagnostic Procedure 9

ABS ACTUATOR DUMP SOLENOID SHORT CIRCUIT OR OPEN (Warning lamp flashing number 3 or 8)

Remove battery negative terminal connector.

↓

A

CHECK DUMP SOLENOID.
Check resistance between ABS control unit connector terminals ⑰ and ⑪.
Resistance:
Approximately 1.5Ω

OK → Replace ABS control unit.

NG ↓

CHECK ABS CONTROL UNIT GROUND CIRCUIT.
Go to **Diagnostic Procedure 6**, BR-44.

NG → Repair harness or connector.

OK ↓

B

CHECK ABS ACTUATOR GROUND CIRCUIT.
Check harness continuity between ABS actuator terminal ④ and suitable body ground.

OK → Repair harness or connectors

NG ↓

C

CHECK DUMP SOLENOID.
Check resistance between ABS actuator connector terminals ③ and ④.
Resistance:
Approximately 1.5Ω

OK → Repair harness or connectors between dump solenoid and ABS control unit..

NG ↓

Replace ABS actuator.

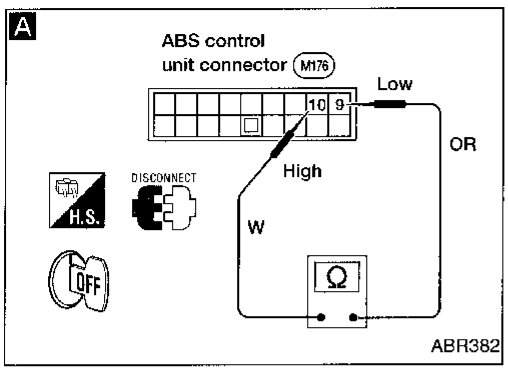

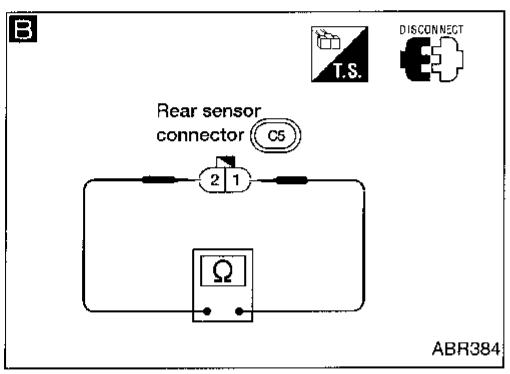

Diagnostic Procedure 10

REAR SENSOR OPEN OR SHORT CIRCUIT (Warning lamp flashing number 9 or 10)

Remove battery negative terminal connector.

A

CHECK REAR SENSOR.
Check resistance between ABS control unit connector terminals ⑩ and ⑨.
Resistance:
1.22 - 1.48 kΩ

OK → Replace ABS control unit.

NG ↓

B

Check resistance between rear sensor unit connector terminals ② and ①.
Resistance:
1.22 - 1.48 kΩ

OK → Repair harness or connectors between ABS control unit and rear sensor.

NG ↓

Replace rear sensor unit.

Diagnostic Procedure 11

SENSOR SIGNAL ERRATIC (Warning lamp flashing number 6)

CHECK REAR SENSOR ROTOR TOOTH CONDITION.
1. Remove propeller shaft.
2. Remove companion flange, refer to "DISASSEMBLY" in PD section.
3. Check rotor on companion flange.

NG → Replace rear sensor rotor with companion flange.

OK ↓

Replace ABS control unit.

Diagnostic Procedure 12

ABS CONTROL UNIT (Warning lamp flashing 13, 14 or 15)

ABS control unit malfunction.

↓

Replace ABS control unit.

Diagnostic Procedure 13

Other (Warning lamp flashing 5)

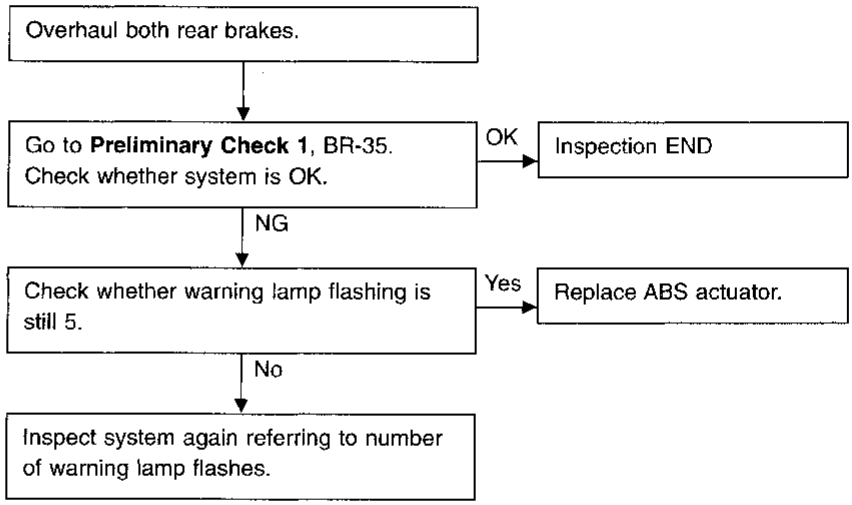

Electrical Components Inspection

REAR SENSOR UNIT AND ACTUATOR

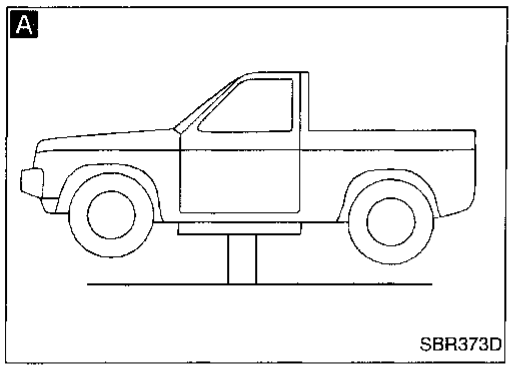

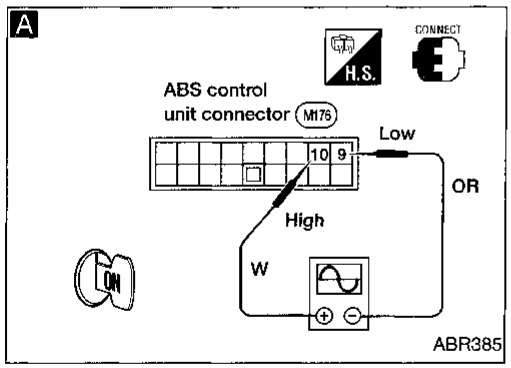

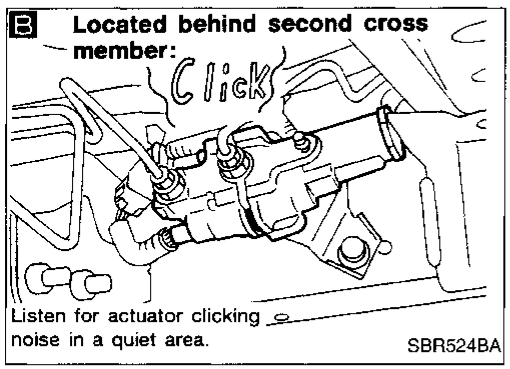

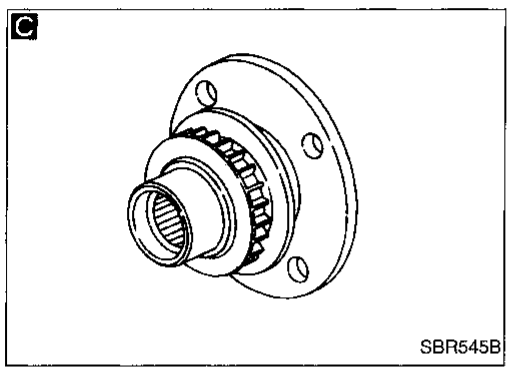

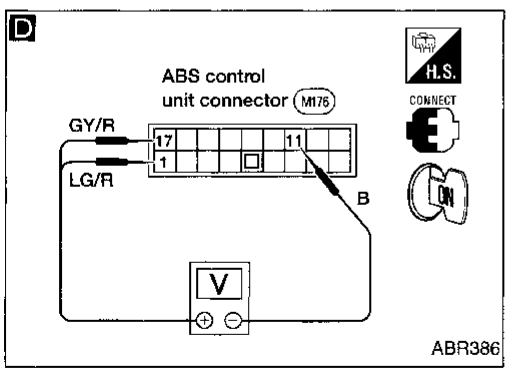

A

CHECK REAR SENSOR SIGNAL.
1. Raise vehicle. Confirm it is safe to rotate rear wheels.
2. Start engine and rotate rear wheels with transmission in D position or first gear position.
3. Check rear sensor signal voltage between control unit terminals (10) and (9) with AC voltmeter.

Voltage: 0.4V or more
M/T at 700 rpm
A/T at 850 rpm

NG → **C**

OK ↓

C

CHECK REAR SENSOR ROTOR for following points:
- Tooth condition
- Installation on companion flange
- Deformation
- Wear
- Looseness

NG ↓ Replace rear sensor rotor with companion flange.

OK ↓ Replace rear sensor unit.

B

CHECK ABS ACTUATOR OPERATION.
Go to **Preliminary Check 2**, BR-35. Clicking noise sounds from actuator, when the ignition switch is turned on with battery cable connected.

NG → **D**

OK ↓

D

CHECK PULSING VOLTAGE FROM ABS CONTROL UNIT.
Check pulsing voltage for ISO and DUMP solenoid between ABS control unit terminals (17) and (11), and terminals (1) and (11).
Voltage: 0.3 - 3.5V for approx. 13 msec.
Use suitable digital voltmeter. Pulsing voltage appears when ABS warning lamp goes off after ignition is turned on.

NG ↓ Replace ABS control unit.

OK ↓ Replace ABS actuator.

CHECK ABS OPERATION as follows:
1. Perform ABS check in a safe place without obstacles in the vicinity.
2. Drive the vehicle for more than one minute at speeds over 40 km/h (25 MPH) in the 2WD mode, then check that the warning lamp does not light on the instrument panel. After this, check for operation.
3. Check if ordinary braking effect occurs, and also check that the rear wheels do not lock when abrupt braking causes the front wheels lock.

OK ↓ ABS is good condition.

NG ↓ Replace ABS actuator.

General Specifications

Applied model	2WD	4WD	
		Standard wheelbase	Long wheelbase
Front brake			
Brake model	CL28VA	CL28VD	
Cylinder bore diameter x number of pistons mm (in)	60.6 (2.386) x 1	42.8 (1.685) x 2	
Pad length x width x thickness mm (in)	IN: 126.5 x 43 x 11 (4.98 x 1.69 x 0.43) OUT: 129 x 43 x 11 (5.08 x 1.69 x 0.43)	146.6 x 48.5 x 10 (5.77 x 1.909 x 0.39)	
Rotor outer diameter x thickness mm (in)	250 x 22 (9.84 x 0.87)	277 x 26 (10.9 x 1.02)	
Rear brake			
Brake model	LT26B	LT30A	
Cylinder bore diameter mm (in)	22.22 (7/8)	20.64 (13/16)	
Lining length x width x thickness mm (in)	249.6 x 50 x 5.5 (9.83 x 1.97 x 0.217)	296 x 50 x 6.1 (11.65 x 1.97 x 0.240)	
Drum inner diameter mm (in)	260.0 (10.24)	295.0 (11.61)	
Master cylinder			
Bore diameter mm (in)	25.40 (1)		
Control valve			
Valve model	Linkage type load sensing valve	Proportioning valve within master cylinder	
Split point [kPa (kg/cm^2, psi)] x reducing ratio	(Variable) x 0.23	2,452 (25, 356) x 0.2	2,942 (30, 427) x 0.2
Brake booster			
Booster model	M195T	M215T	
Diaphragm diameter mm (in)	Pri.: 205 (8.07) Sec.: 180 (7.09)	Pri.: 230 (9.06) Sec.: 205 (8.07)	
Recommended brake fluid	DOT 3		

Inspection and Adjustment

DISC BRAKE

Unit: mm (in)

Brake model	CL28VA	CL28VD
Pad wear limit		
Minimum thickness	2.0 (0.079)	
Rotor repair limit		
Minimum thickness	20.0 (0.787)	24.0 (0.945)

DRUM BRAKE

Unit: mm (in)

Brake model	LT26B	LT30A
Lining wear limit		
Minimum thickness	1.5 (0.059)	
Drum repair limit		
Maximum inner diameter	261.5 (10.30)	296.5 (11.67)
Out-of-round limit	0.15 (0.0059)	

BRAKE PEDAL

Unit: mm (in)

Free height "H"*	
M/T	209 - 219 (8.23 - 8.62)
A/T	212 - 222 (8.35 - 8.74)
Depressed height "D" [under force of 490 N (50 kg, 110 lb) with engine running]	120.0 (4.72)
Clearance "C" between pedal stopper and threaded end of stop lamp switch or ASCD switch	0.3 - 1.0 (0.012 - 0.039)
Pedal free play	
At clevis	1.0 - 3.0 (0.039 - 0.118)
At pedal pad	4 - 12 (0.16 - 0.47)

*: Measured from surface of melt sheet to pedal pad.

PARKING BRAKE CONTROL

Control type	Stick lever
Lever stroke [under force of 196 N (20 kg, 44 lb)]	10 - 12
Lever stroke when warning switch comes on	1

SECTION ST

CONTENTS

PRECAUTIONS AND PREPARATION 2
Supplemental Restraint System (SRS) "AIR BAG" 2
Steering System 2
Special Service Tools 3
Commercial Service Tool 4
ON-VEHICLE SERVICE 5
Steering System 5
Checking and Adjusting Drive Belts (For power steering) 5
Checking Fluid Level 5
Checking Fluid Leakage 6
Bleeding Hydraulic System 6
Checking Steering Wheel Turning Force (For power steering) 7
Checking Steering Wheel Play 7
Checking Neutral Position on Steering Wheel 8
Checking Front Wheel Turning Angle 8
Checking Hydraulic System 8
STEERING WHEEL AND STEERING COLUMN 10
Steering Wheel 10
Steering Column 11
Disassembly and Assembly 12
Inspection 13
MANUAL STEERING GEAR (Model: VB66K) 14
Removal and Installation 14
Disassembly 15
Assembly and Adjustment 15
Inspection 18
POWER STEERING SYSTEM (Model: PB59K) 20
Description 20
POWER STEERING GEAR (Model: PB59K) 21
Removal and Installing 21
Power Steering Gear Component 21
Pre-disassembly Inspection and Adjustment 22
Disassembly 23
Assembly 24
POWER STEERING SYSTEM (Model: PB48S) 27
Description 27
POWER STEERING GEAR (Model: PB48S) 28
Removal and Installing 28
Power Steering Gear Component 28
Pre-disassembly Inspection and Adjustment 29
Disassembly 30
Assembly 32
POWER STEERING OIL PUMP 35
Disassembly and Assembly 35
Pre-disassembly Inspection 35
Inspection 36
Disassembly 36
Assembly 37
STEERING LINKAGE 38
Removal and Installation 38
Disassembly 39
Inspection 40
SERVICE DATA AND SPECIFICATIONS (SDS) 41
General Specifications 41
Inspection and Adjustment 41

Supplemental Restraint System (SRS) "AIR BAG"

The Supplemental Restraint System "Air Bag" used along with a seat belt, helps to reduce the risk or severity of injury to the driver in a frontal collision. The Supplemental Restraint System consists of an air bag module (located in the center of the steering wheel), a diagnosis sensor unit, warning lamp, wiring harness, a crash zone sensor (4WD models) and spiral cable. Information necessary to service the system safely is included in the **RS section** of this Service Manual.

WARNING:

- **To avoid rendering the SRS inoperative, which could increase the risk of personal injury or death in the event of a collision which would result in air bag inflation, all maintenance must be performed by an authorized NISSAN dealer.**
- **Improper maintenance, including incorrect removal and installation of the SRS, can lead to personal injury caused by unintentional activation of the system.**
- **Do not use electrical test equipment on any circuit related to the SRS unless instructed to in this Service Manual. SRS wiring harnesses are covered with yellow insulation either just before the harness connectors or for the complete harness, for easy identification.**

Steering System

- **Before disassembly, thoroughly clean the outside of the unit.**
- **Disassembly should be done in a clean work area. It is important to prevent the internal parts from becoming contaminated by dirt or other foreign matter.**
- **For easier and proper assembly, place disassembled parts in order on a parts rack.**
- **Use nylon cloths or paper towels to clean the parts; common shop rags can leave lint that might interfere with their operation.**
- **Before inspection or reassembly, carefully clean all parts with a general purpose, non-flammable solvent.**
- **Before assembly, apply a coat of recommended ATF* to hydraulic parts. Petroleum jelly may be applied to O-rings and seals. Do not use any grease.**
- **Replace all gaskets, seals and O-rings. Avoid damaging O-rings, seals and gaskets during installation. Perform functional tests whenever designated.**

  ***: Automatic Transmission Fluid type DEXRON™ II E, DEXRON™ III, or equivalent.**

Special Service Tools

The actual shapes of Kent-Moore tools may differ from those of special service tools illustrated here.

Tool number (Kent-Moore No.) Tool name	Description		Unit application	
			Manual steering	Power steering
ST27180001 (J25726-A) Steering wheel puller	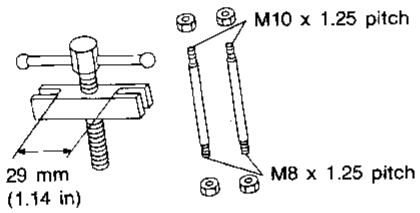 NT544	Removing steering wheel	X	X
HT72520000 (J25730-B) Ball joint remover	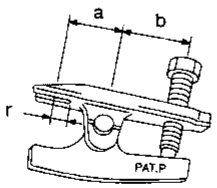 NT546	Removing ball joint and swivel joint **a: 33 mm (1.30 in)** **b: 50 mm (1.97 in)** **r: R11.5 mm (0.453 in)**	X	X
ST29020001 (J24319-01) Steering gear arm puller	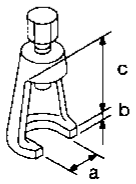 NT551	Removing pitman arm **a: 34 mm (1.34 in)** **b: 6.5 mm (0.256 in)** **c: 61.5 mm (2.421 in)**	X	X
KV48101500 (J28802) Lock nut wrench	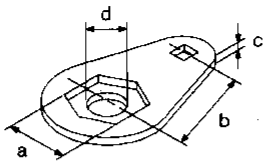 NT534	Removing and installing lock nut **a: 73.1 mm (2.878 in)** **b: 100 mm (3.94 in)** **c: 12 mm (0.47 in)** **d: 60 mm (2.36 in) dia.**	X	—
KV48101400 (J28803) Adjusting plug wrench	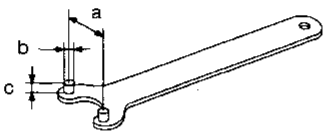 NT539	Adjusting and tightening lock nut **a: 46.7 mm (1.839 in)** **b: 8.5 mm (0.335 in) dia.** **c: 7 mm (0.28 in)**	X	—
ST3127S000 (See J25765-A) ① GG91030000 (J25765-A) Torque wrench ② HT62940000 (—) Socket adapter ③ HT62900000 (—) Socket adapter	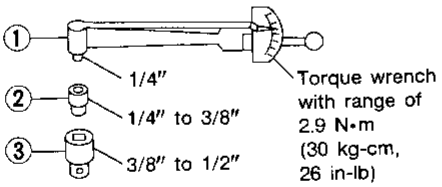 NT541	Measuring turning torque	X	X

Special Service Tools (Cont'd)

Tool number (Kent-Moore No.) Tool name	Description		Unit application	
			Manual steering	Power steering
KV48100301 (—) Strut & steering gearbox attachment	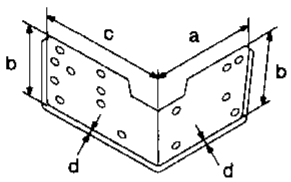 NT543	Steering gear is installed. **a: 162 mm (6.38 in)** **b: 110 mm (4.33 in)** **c: 190 mm (7.48 in)** **d: 9 mm (0.35 in)**	X	X
ST27091000 (J26357 and J26357-10) Pressure gauge	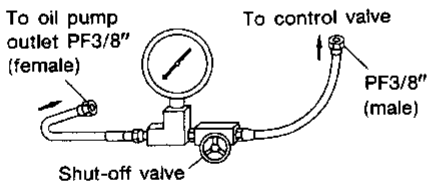 NT547	Measuring oil pressure	—	X
KV481009S0 (—) Oil seal drift set ① KV48100910 (—) Drift ② KV48100920 (J26367) Adapter ③ KV48100930 (J26367) Adapter	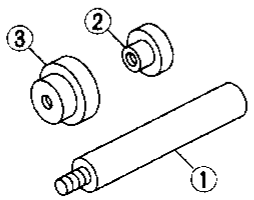 NT174	Installing oil seal	—	X
KV48100700 (J26364) Torque adapter	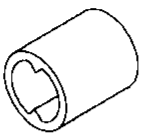 NT169	Adjusting worm bearing pre-load	X	X

Commercial Service Tool

Tool name	Description		Unit application	
			Manual steering	Power steering
Boot band attachment	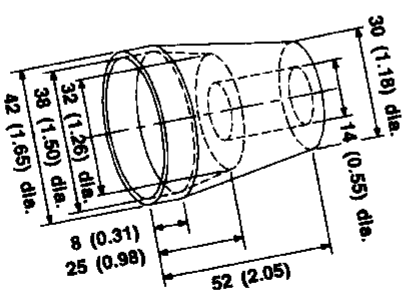 NT175	Installing boot band Unit: mm (in)	X	X

Steering System

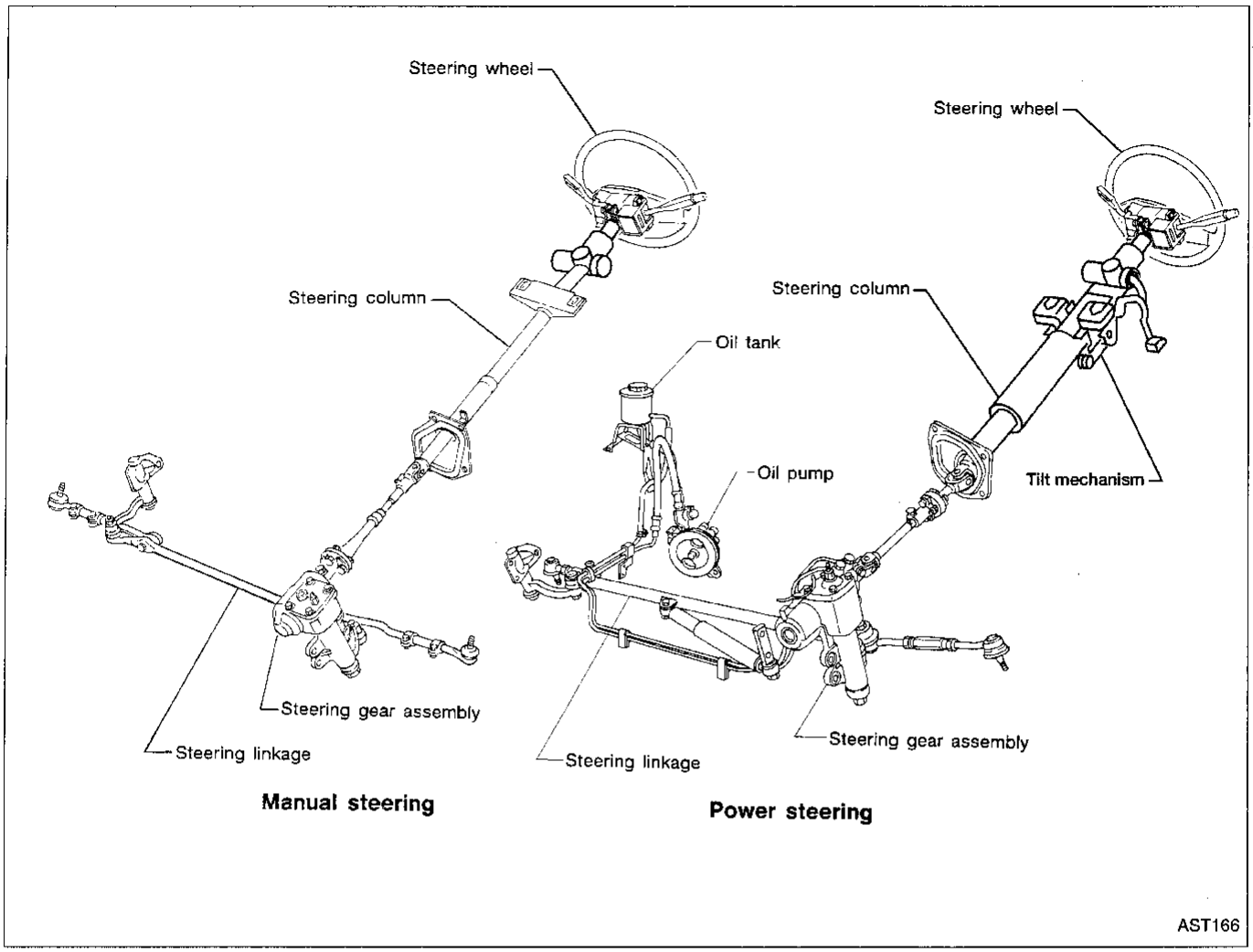

Checking and Adjusting Drive Belts (For power steering)

Refer to MA section ("Checking Drive Belts", "ENGINE MAINTENANCE").

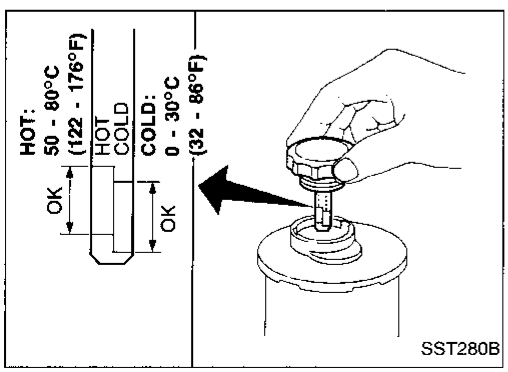

Checking Fluid Level

Check fluid level referring to the scale on the dipstick.
Use "HOT" range for fluid temperatures of 50 to 80°C (122 to 176°F). Use "COLD" range for fluid temperatures of 0 to 30°C (32 to 86°F).

CAUTION:

- **Do not overfill.**
- **Recommended fluid is Automatic Transmission Fluid type "DEXRON™ II E, DEXRON™ III", or equivalent.**

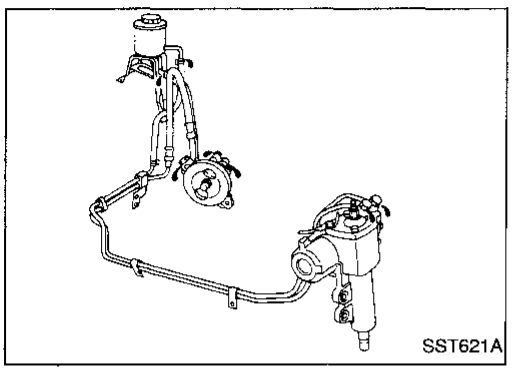

Checking Fluid Leakage

Check lines for proper attachment, leaks, cracks, damage, chafing or deterioration.

1. Run engine between idle speed and 1,000 rpm.

- **Make sure temperature of fluid in reservoir tank rises to 60 to 80°C (140 to 176°F).**

2. Turn steering wheel right-to-left several times.
3. Hold steering wheel at each "lock" position for five seconds and carefully check for fluid leakage.

CAUTION:
Do not hold steering wheel at lock position for more than 15 seconds.

4. If fluid leakage from any line is noticed, loosen flare nut and then retighten.

Do not overtighten connector as this can damage O-ring, washer and connector.

5. If fluid leakage from power steering pump is noticed, check power steering pump. Refer to ST-35.
6. If fluid leakage from power steering gear is noticed, check power steering gear. Refer to ST-20 (4WD models), or ST-27 (2WD models).

Bleeding Hydraulic System

1. Raise front end of vehicle until wheels are clear of the ground.
2. Add fluid to reservoir tank to specified level. Then quickly turn steering wheel fully to right and left and lightly touch steering stoppers.
   Repeat steering wheel operation until fluid level no longer decreases.
3. Start engine.
   Repeat step 2 above.

- Incomplete air bleeding will cause the following to occur:

a. Air bubbles in reservoir tank
b. Clicking noise in power steering pump
c. Excessive buzzing in power steering pump
   When this happens, bleed air again.

Fluid noise may occur in the valve or power steering pump. This is common when the vehicle is stationary or while turning the steering wheel slowly. This does not affect the performance or durability of the system.

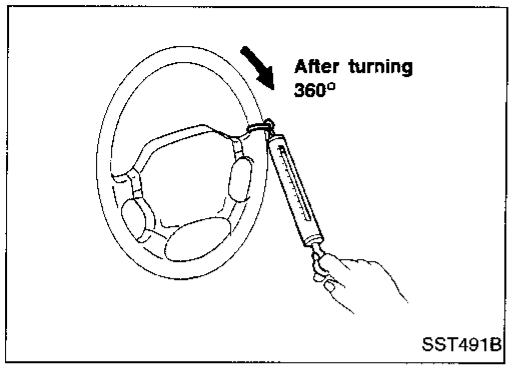

Checking Steering Wheel Turning Force (For power steering)

1. Park vehicle on a level, dry surface and set parking brake.
2. Start engine and run at idle speed or 1,000 rpm.
3. Bring power steering fluid up to adequate operating temperature. [Make sure temperature of fluid is approximately 60 to 80°C (140 to 176°F).]

Tires need to be inflated to normal pressure.

4. Check steering wheel turning force when steering wheel has been turned 360° from neutral position.
   Steering wheel turning force:
   PB48S-type
   24.5 - 29.4 N (2.5 - 3.0 kg, 5.5 - 6.6 lb)
   PB59K-type
   39 N (4 kg, 9 lb) or less
5. If steering wheel turning force is out of specification, check the following:

a. Hydraulic system. Refer to "Checking Hydraulic System", ST-8.
b. Steering Column. Refer to ST-11.
c. Front suspension and axle. Refer to FA section ("Front Axle and Front Suspension Parts", "ON-VEHICLE SERVICE").
d. Steering gear turning torque. Refer to "TURNING TORQUE MEASUREMENT", ST-22 (4WD models), or ST-29 (2WD models).

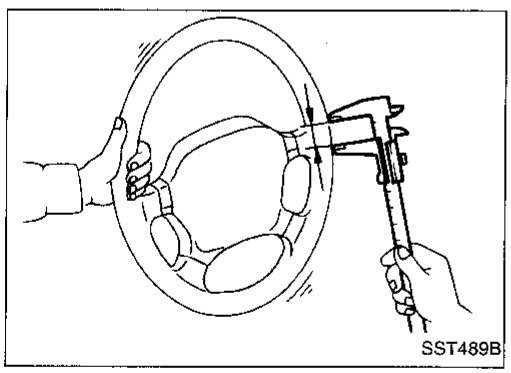

Checking Steering Wheel Play

- Place wheels in a straight ahead position and check steering wheel play.
  Steering wheel play:
  35 mm (1.38 in) or less
- If it is not within specification, check the following for loose or worn components.

a. Steering column. Refer to ST-11.
b. Front suspension and axle. Refer to FA section ("Front Axle and Front Suspension Parts", "ON-VEHICLE SERVICE".)
c. Steering gear. [Refer to ST-14 (manual steering), ST-20 (power steering 4WD), or ST-27 (power steering 2WD).]

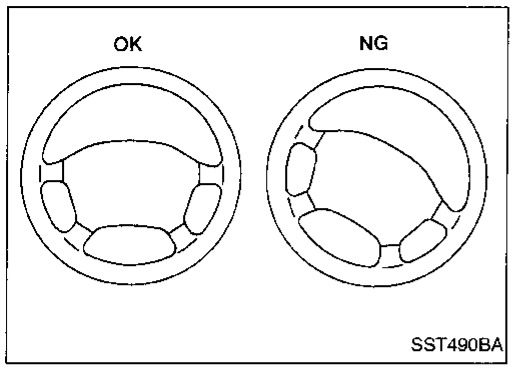

Checking Neutral Position on Steering Wheel

- Make sure that wheel alignment is correct.
  Wheel alignment:
  Refer to FA section ("Inspection and Adjustment", "SERVICE DATA AND SPECIFICATIONS").
- Verify that the steering gear is centered before removing the steering wheel.

Checking

1. Check that the steering wheel is in the neutral position when driving straight ahead.
2. If it is not in the neutral position, remove the steering wheel and reinstall it correctly.
3. If the neutral position is still not correct:

a. Loosen tie-rod lock nuts.
b. Move tie-rods, in opposite direction, the same amount on both left and right sides.
This will compensate for error in the neutral position.

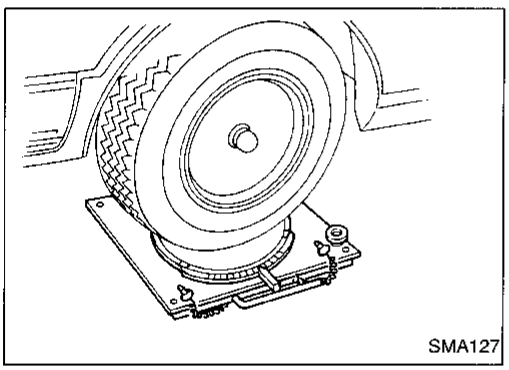

Checking Front Wheel Turning Angle

1. Rotate steering wheel fully right, then left; measure turning angle.
   Turning angle of full turns:
   Refer to FA section ("Inspection and Adjustment", "SERVICE DATA AND SPECIFICATIONS".)
2. If it is not within specification, check stopper bolt adjustment. Refer to FA section ("FRONT WHEEL TURNING ANGLE", "Front Wheel Alignment".)

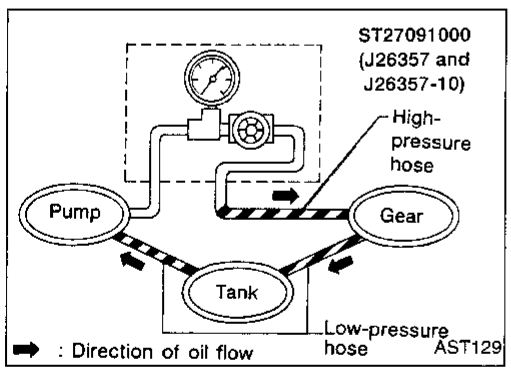

Checking Hydraulic System

Before starting, check belt tension, driving pulley and tire pressure.

1. Set Tool. Open shut-off valve. Then bleed air. Refer to "Bleeding Hydraulic System", ST-6.
2. Run engine at idle speed or 1,000 rpm.

- **Make sure temperature of fluid in reservoir tank rises to 60 to 80°C (140 to 176°F).**

WARNING:

Warm up engine with shut-off valve fully opened. If engine is started with shut-off valve closed, fluid pressure in power steering pump increases to maximum. This will raise fluid temperature abnormally.

3. Check pressure with steering wheel fully turned to left and right positions while idling at 1,000 rpm.

CAUTION:

Do not hold the steering wheel at full lock position for more than 15 seconds.

Oil pump maximum pressure:
7,649 - 8,238 kPa
(78 - 84 kg/cm^2, 1,109 - 1,194 psi) at idling

4. If power steering pressure is below standard pressure, slowly close shut-off valve and check pressure.

Checking Hydraulic System (Cont'd)

CAUTION:

Do not close shut-off valve for more than 15 seconds.

- When pressure reaches maximum pressure, gear is damaged. Check power steering gear. Refer to ST-20 (4WD models), or ST-27 (2WD models).
- When pressure remains below standard pressure, pump is damaged. Check power steering pump. Refer to ST-35.

5. If power steering pressure is higher than standard pressure, power steering pump flow control valve is damaged. Check power steering pump. Refer to ST-35.
6. After checking hydraulic system, remove Tool and add fluid as necessary. Then completely bleed air out of system. Refer to ST-6.

29 - 39 (3.0 - 4.0, 22 - 29)
Steering wheel
Air bag module
3.9 - 4.4 (0.4 - 0.5, 34.7 - 44.2)
Air bag module
Spiral cable
Steering tube assembly
Column cover
Dynamic mass damper (2WD models)
29 - 39 (3.0 - 4.0, 22 - 29)
13 - 18 (1.3 - 1.8, 9 - 13)
Steering wheel
24 - 29 (2.4 - 3.0, 17 - 22)
9 - 14 (0.9 - 1.4, 78 - 122)
13 - 18 (1.3 - 1.8, 9 - 13)
Spiral cable
9 - 14 (0.9 - 1.4, 78 - 122)
24 - 29 (2.4 - 3.0, 17 - 22)
9 - 14 (0.9 - 1.4, 78 - 122)
9 - 14 (0.9 - 1.4, 78 - 122)
Lower joint
Lower joint
Dash insulator
Dash insulator
: N·m (kg-m, in-lb)
: N·m (kg-m, ft-lb)
Non-tilt type
Tilt type
AST164

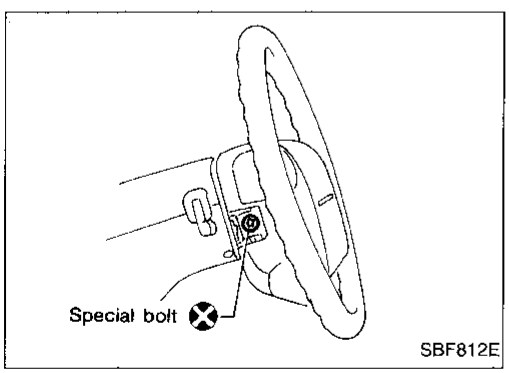

Steering Wheel

REMOVAL AND INSTALLATION

1. Remove air bag module and spiral cable. Refer to RS section ["Air Bag Module and Spiral Cable", "SUPPLEMENTAL RESTRAINT SYSTEM (SRS)"].
2. Disconnect horn connector and remove steering wheel nut.
3. Remove steering wheel mass damper.

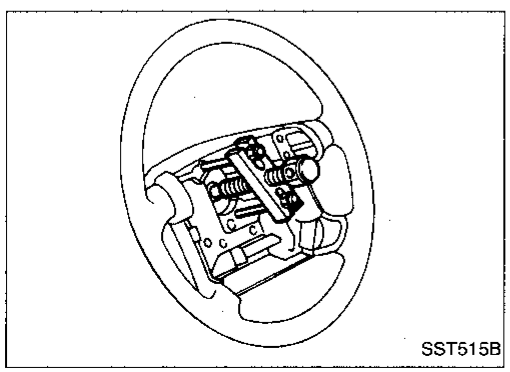

4. Remove steering wheel using Tool.

- For installation, refer to RS section ["Air Bag Module and Spiral Cable", "SUPPLEMENTAL RESTRAINT SYSTEM (SRS)"].

Steering Column

REMOVAL

CAUTION:

- **The rotation of the spiral cable (SRS "Air bag" component part) is limited. If the steering gear must be removed, set the front wheels in the straight-ahead direction.**
  Do not rotate the steering column while the steering gear is removed.
- **Remove the steering wheel before removing the steering lower joint to avoid damaging the SRS spiral cable. Refer to ST-10.**

1. Remove steering wheel, refer to ST-10.
2. Remove driver lower finisher and reinforcement.
3. Disconnect combination switch electrical connectors and air bag harness connector.
4. Remove key interlock cable (A/T models).
5. Pull back carpet and remove dash insulator.
6. Remove bolt from lower joint.
7. Remove two steering column bolts and remove steering column.

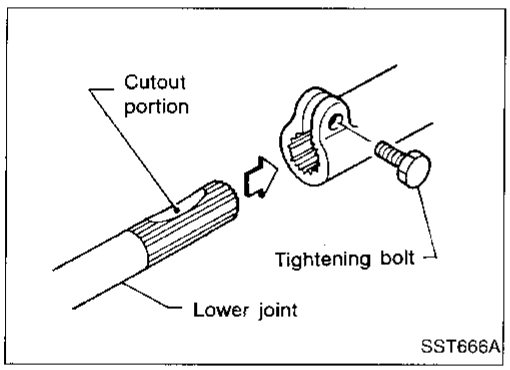

INSTALLATION

- When installing steering column, finger-tighten all lower bracket and clamp retaining bolts; then tighten them securely. Make sure that undue stress is not applied to steering column.
- When fitting steering lower joint, be sure tightening bolt faces cutout portion.
- Align spiral cable correctly when installing steering wheel. Refer to RS section ["Air Bag Module and Spiral Cable", "SUPPLEMENTAL RESTRAINT SYSTEM (SRS)"].

CAUTION:

After installation, turn steering wheel to make sure it moves smoothly. Ensure the number of turns from the straight forward position to left and right locks are the same. Be sure that the steering wheel is in a neutral position when driving straight ahead.

Disassembly and Assembly

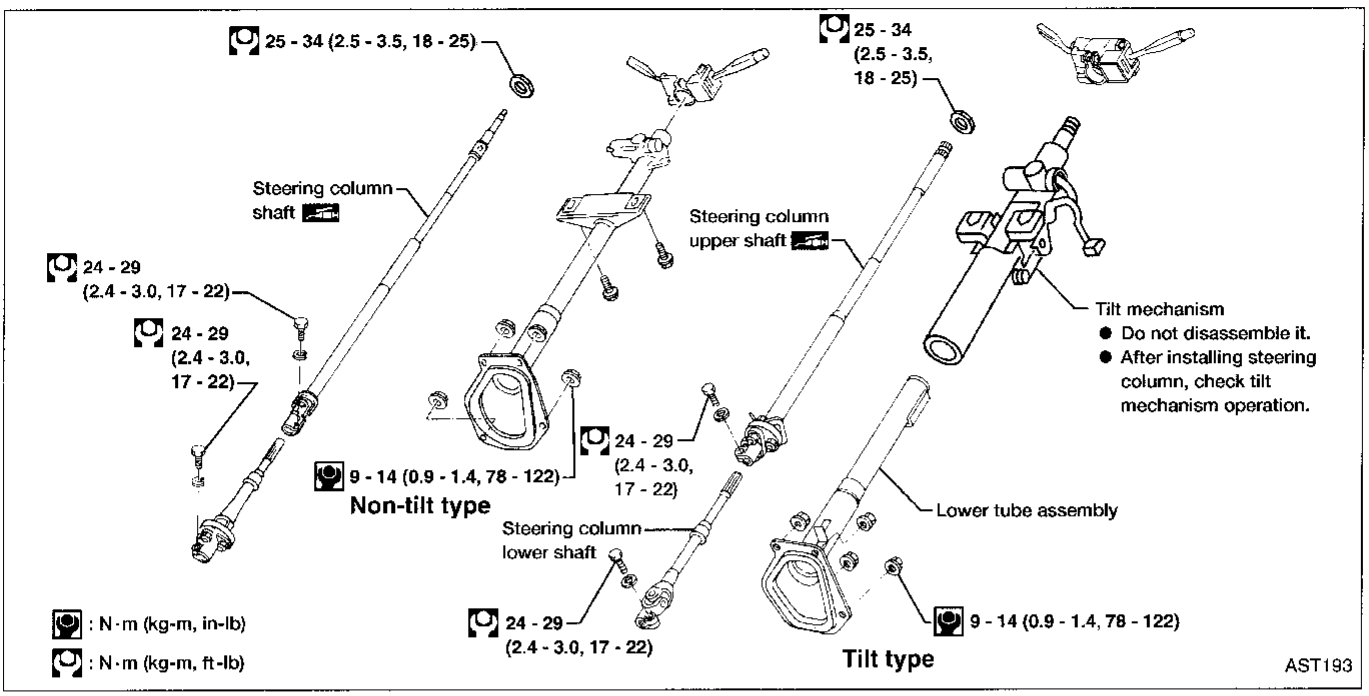

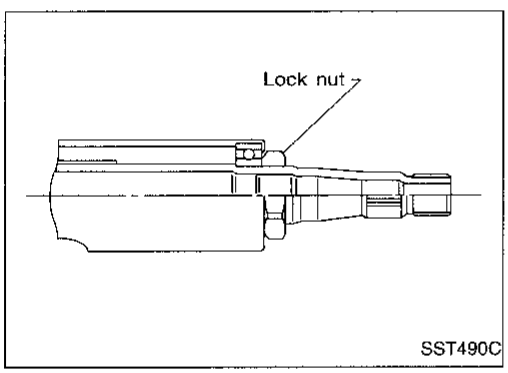

- When disassembling and assembling, unlock steering lock with key.
- Remove combination switch.
- Install lock nut on steering column shaft and tighten the nut to specified torque.

  Lock nut:

  : 25 - 34 N·m (2.5 - 3.5 kg-m, 18 - 25 ft-lb)

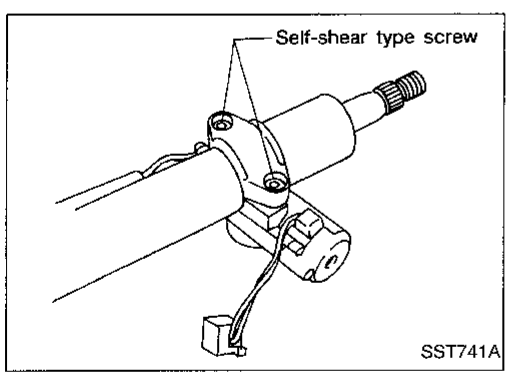

- Steering lock

a. Break self-shear type screws using a drill or other appropriate tool.

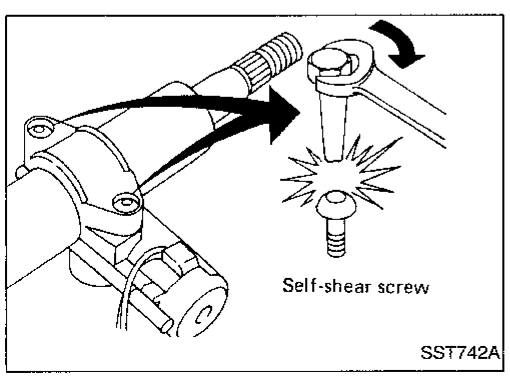

b. Install self-shear type screws, then tighten until heads break off.

Disassembly and Assembly (Cont'd)

Tilt mechanism

After installing steering column, check tilt mechanism operation.

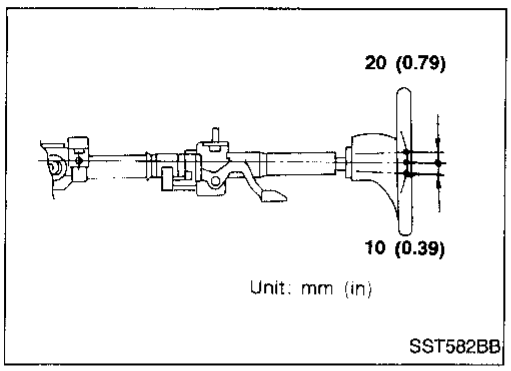

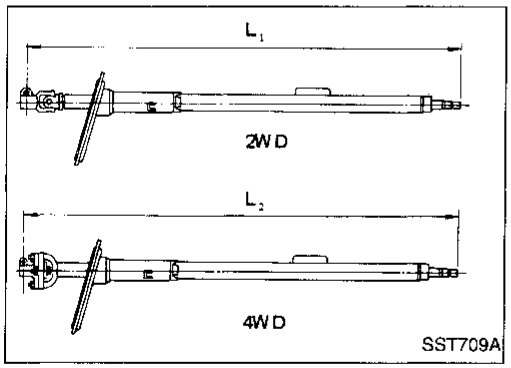

Inspection

- When steering wheel does not turn smoothly, check the steering column as follows and replace damaged parts.

a. Check column bearings for damage or unevenness. Lubricate with recommended multi-purpose grease or replace steering column as an assembly, if necessary.

b. Check jacket tube for deformation or breakage. Replace if necessary.

- When the vehicle is involved in a light collision, check dimension "L". If it is not within specifications, replace steering column as an assembly.

Column length "L_1 & L_2":
L_1 = 895.0 - 898.6 mm (35.24 - 35.38 in)
L_2 = 863.1 - 866.7 mm (33.98 - 34.12 in)

Removal and Installation

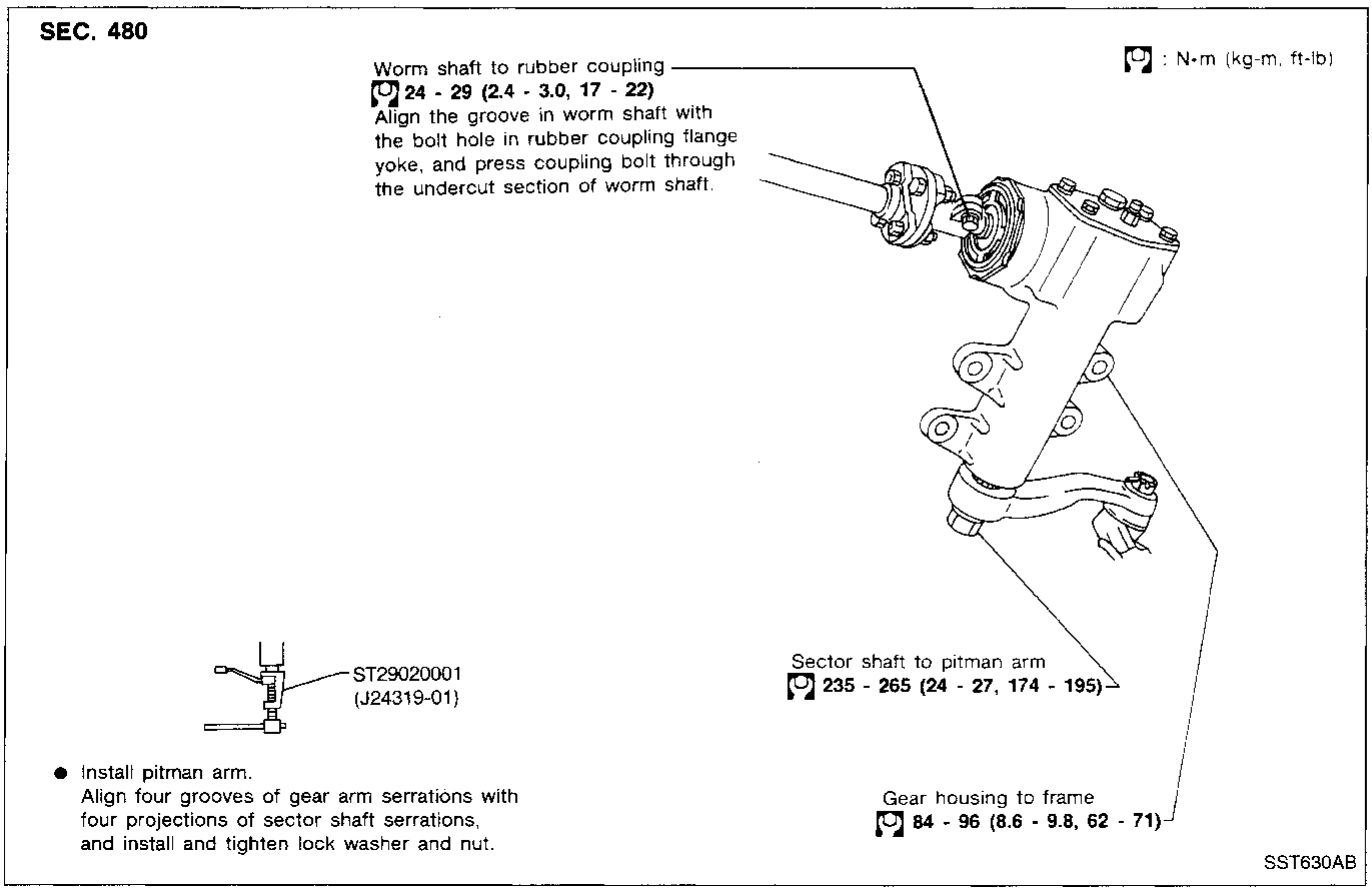

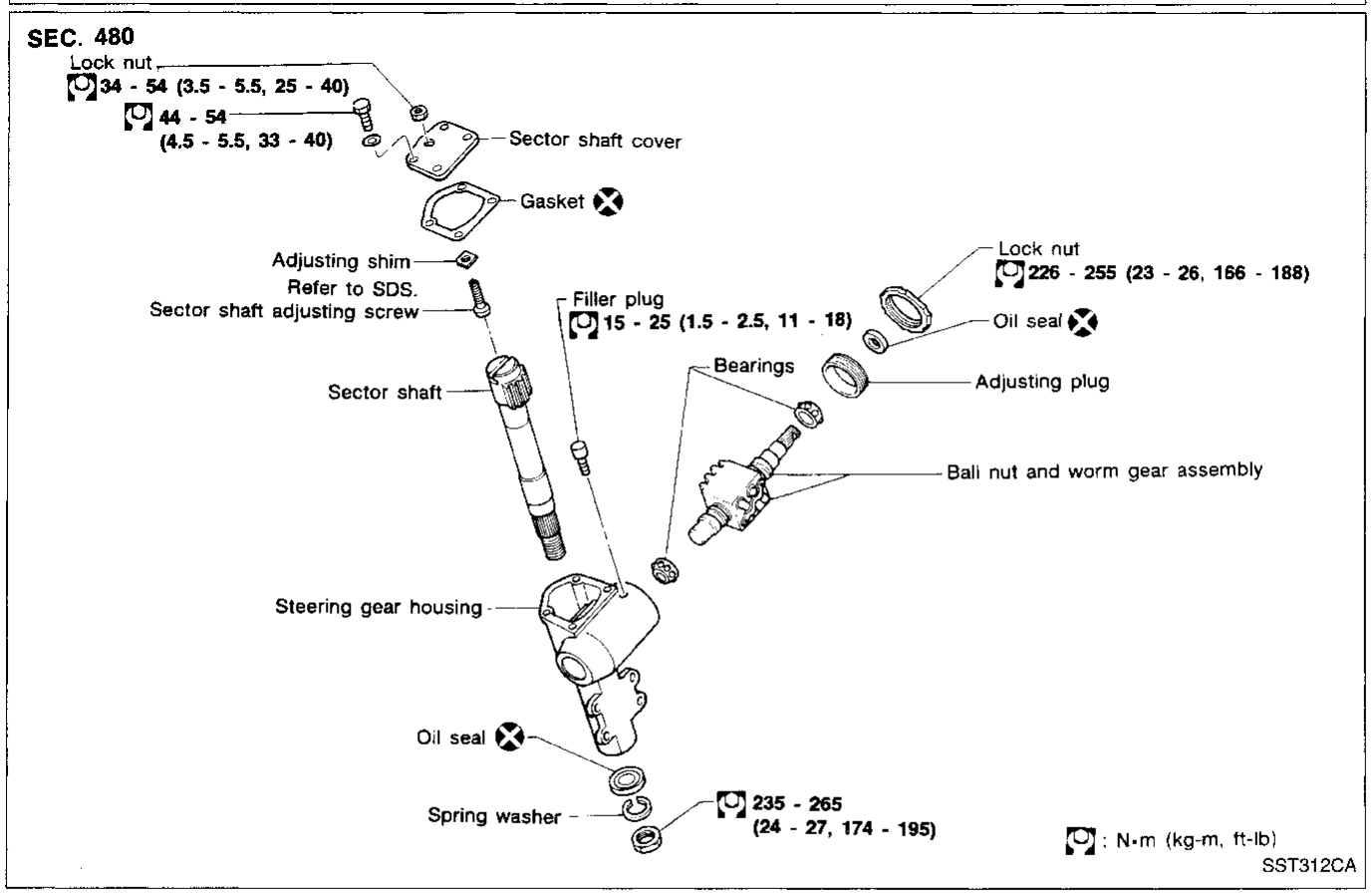

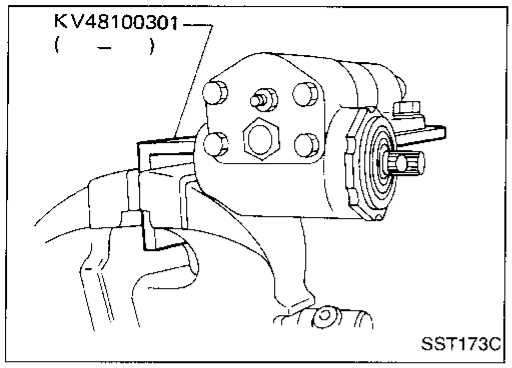

Disassembly

1. Place steering gear in a vise using Tool.

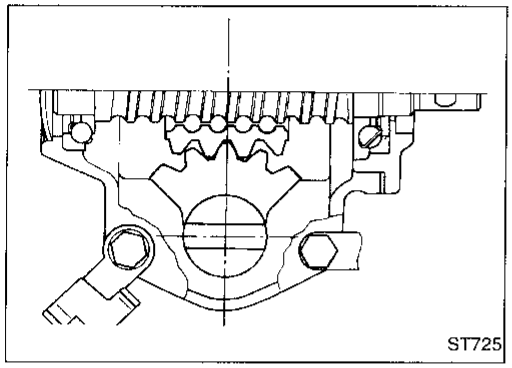

2. Set worm gear in a straight-ahead position.
3. Remove sector shaft together with sector shaft cover.

CAUTION:

- **When pulling sector shaft out, be careful not to damage oil seal or associated parts.**
- **Do not remove sector shaft needle bearings from steering gear housing. If necessary, replace gear housing as an assembly.**

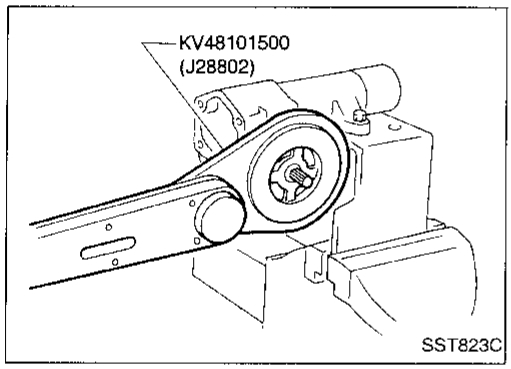

4. Loosen adjusting plug lock nut using Tool.

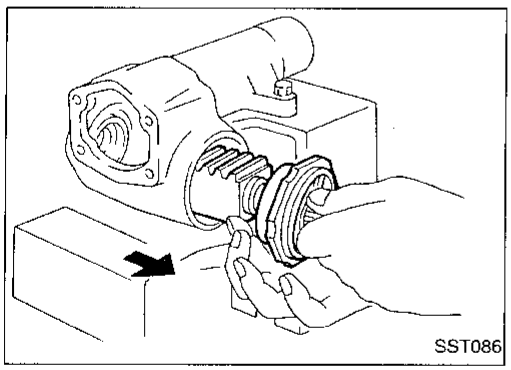

5. Remove worm gear together with worm bearing.

CAUTION:

- **Be careful not to rotate ball nut fully to either end of worm gear.**
  Ends of ball guides will be damaged if nut is rotated until it stops at end of worm gear.
- **Do not separate ball nut from worm gear assembly.**
  If necessary, replace entire unit as an assembly.
- **Do not remove sector shaft needle bearings from steering gear housing.**
  If necessary, replace entire gear housing as an assembly.

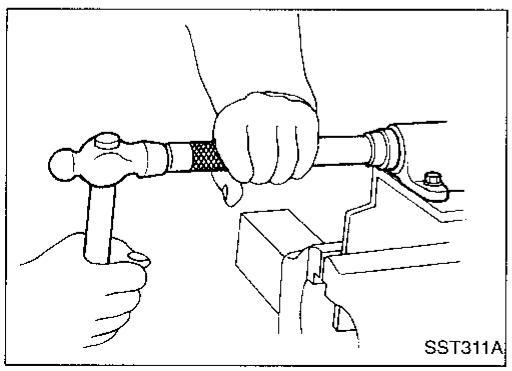

Assembly and Adjustment

Apply multi-purpose grease to sealing area of new oil seals for sector shaft and worm gear.

WORM GEAR BEARING PRELOAD

1. Drive oil seal into place.

Before installing oil seal, coat oil seal contacting face with gear fluid.

Assembly and Adjustment (Cont'd)

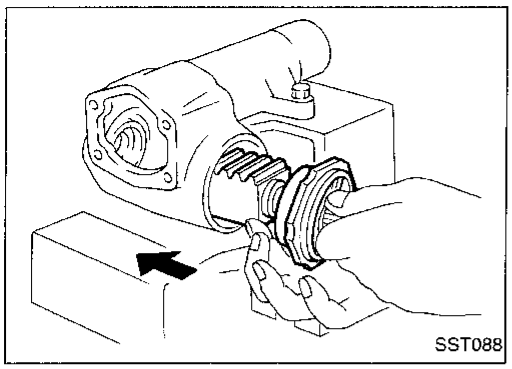

2. Place worm gear assembly together with worm gear bearing into gear housing.

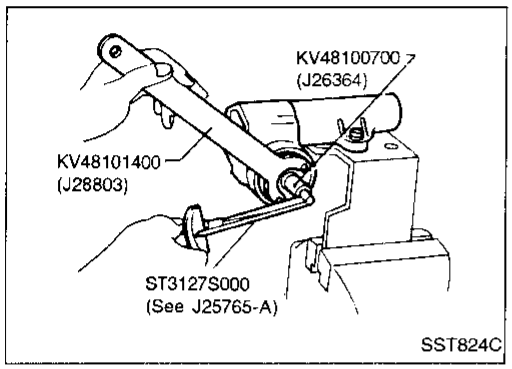

3. Adjust worm gear bearing preload using Tools.

CAUTION:

- **Always adjust worm gear bearing preload by turning adjusting plug in clockwise direction.**
- **Before measuring preload, rotate worm gear a few turns in both directions to seat worm gear bearing.**

  Worm gear bearing preload:

  0.69 - 0.88 N·m

  (7.0 - 9.0 kg-cm, 6.1 - 7.8 in-lb)

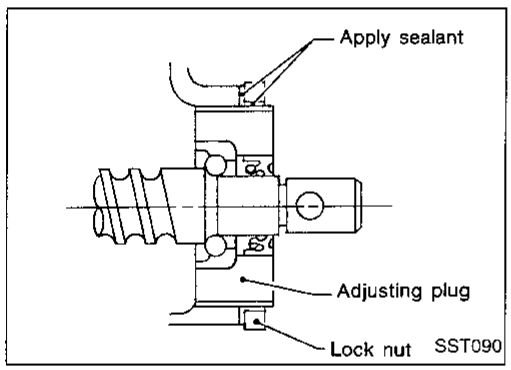

4. Apply suitable sealant to inner surface of lock nut.

Assembly and Adjustment (Cont'd)

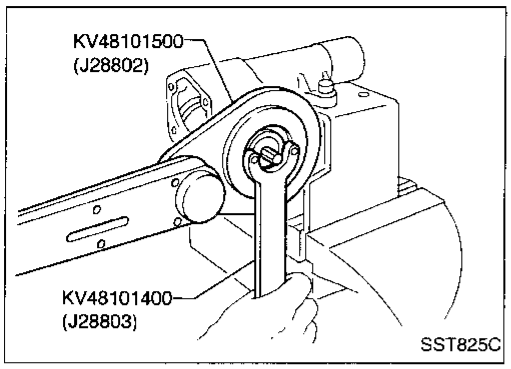

5. Tighten lock nut using Tools.
   Lock nut:
   [O]: 226 - 255 N·m (23 - 26 kg-m, 166 - 188 ft-lb)

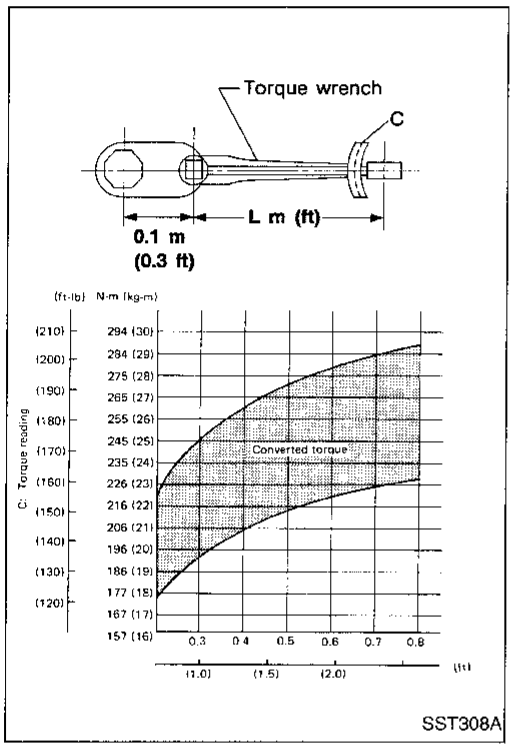

- When tightening lock nut, use the chart shown at left to determine the proper reading of torque.
  (Length of torque wrench vs. setting or reading of torque)
6. After tightening lock nut, check worm gear bearing preload to make sure it is within specification.

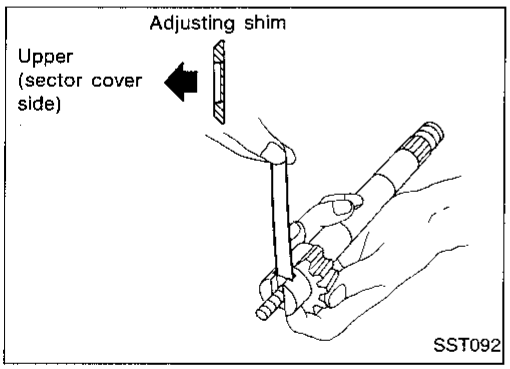

SECTOR SHAFT END PLAY

Select and install proper adjusting shim to achieve proper end play between sector shaft and adjusting screw.

Sector shaft end play:
0.1 mm (0.004 in) or less
Sector shaft adjusting screw shims:
Refer to SDS, ST-42.

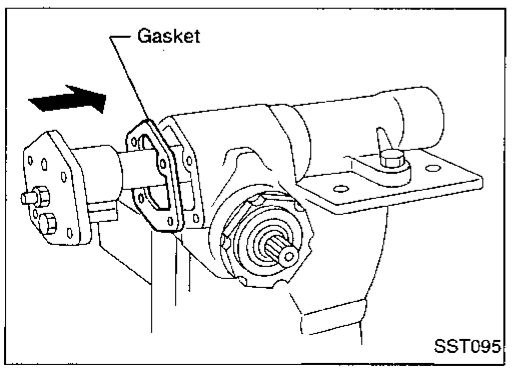

STEERING GEAR PRELOAD AND BACKLASH

1. Set worm gear in a straight-ahead position.

Carefully insert sector shaft in gear housing, being careful not to scratch oil seal.

2. Turn adjusting screw until sector shaft just contacts ball nut. Temporarily tighten lock nut.
3. Lubricate contacting portion of sector shaft and ball nut with gear oil or bearing grease.

Assembly and Adjustment (Cont'd)

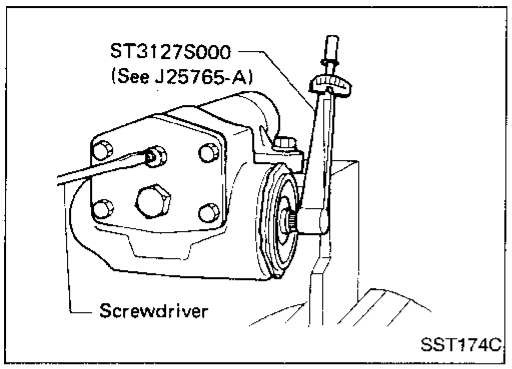

4. Adjust steering gear turning torque in a straight-ahead position using Tool, then lock with lock nut.

CAUTION:

- **Always adjust steering gear preload by turning adjusting screw in clockwise direction.**
- **Rotate worm gear a few turns in both directions to seat steering gear assembly.**

a. Measure turning torque at 360° position from straight-ahead position using Tools.

Turning torque at 360°:
0.69 - 0.88 N·m (7.0 - 9.0 kg-cm, 6.1 - 7.8 in-lb)

b. Measure turning torque at straight-ahead position.

Straight-ahead position is a position where stub shaft is turned 2.14 turns (two full turns and 50°) from lock position.

Turning torque at straight-ahead position:
0.20 - 0.39 N·m (2.0 - 4.0 kg-cm, 1.7 - 3.5 in-lb) higher than turning torque at 360°

Maximum turning torque:
1.08 N·m (11.0 kg-cm, 9.5 in-lb)

If turning torque is not within specifications, adjust by turning sector shaft adjusting screw.

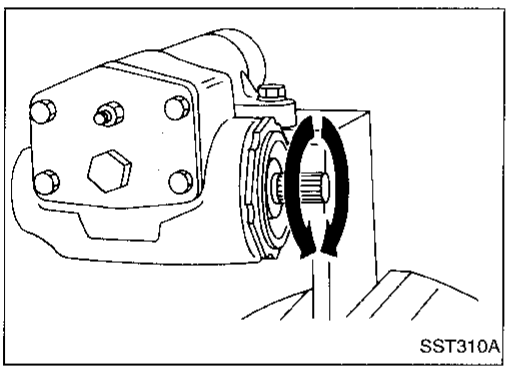

5. Turn worm gear several times by hand to properly break in worm bearing.
6. Check steering gear preload. Readjust as necessary.

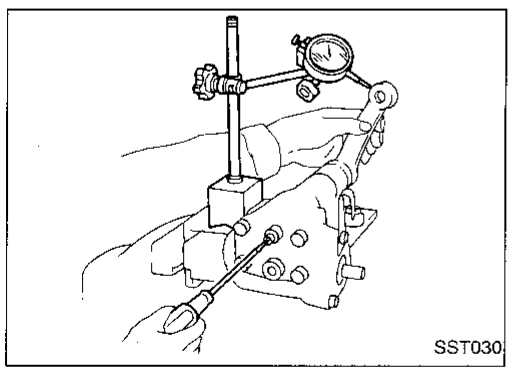

7. Measure total preload.
8. Check backlash.
   Measure backlash at top end of pitman arm in straight-ahead position.

Backlash (in straight-ahead position):
0.1 mm (0.004 in) or less

Inspection

Clean all the disassembled parts in solvent, then check condition.

SECTOR SHAFT

1. Check gear teeth surface for pitting, burrs, cracks or any other damage, and replace as necessary.
2. Check sector shaft serration for distortion and replace as necessary. Also check gear housing for deformation.

Inspection (Cont'd)

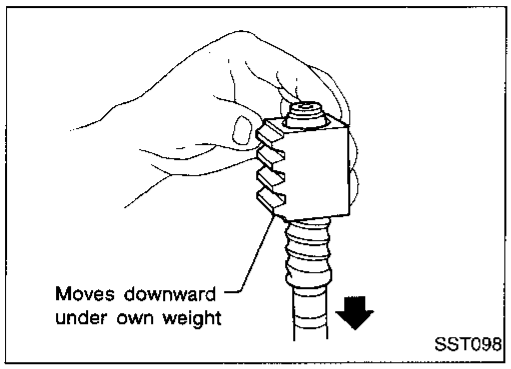

STEERING WORM ASSEMBLY

1. Inspect ball nut gear teeth surface. Replace if pitting, burrs, wear or any other damage is found.
2. Ball nut must rotate smoothly on worm gear. If found to be too tight, assembly should be replaced. Check rotation of ball nut as follows:

CAUTION:
Be careful not to allow ball nut to rotate fully to either end of worm gear.

a. Move ball nut to either end of worm gear. Gradually stand worm shaft and ball nut assembly on end until ball nut moves downward on worm gear under its own weight.
b. If ball nut does not move freely over entire stroke, replace assembly.

Be careful not to damage ball nut guide tube while check is being made.

BEARING

1. Inspect worm gear bearing for wear, pitting or any other damage. Replace as necessary.

When replacing worm gear bearing, replace bearing and outer race as a set.

2. If sector shaft needle bearings are worn or damaged, replace gear housing as an assembly.

OIL SEALS

- Discard any oil seal which has been removed.
- Replace oil seal if sealing surface is deformed or cracked.
- Discard oil seal if spring is fatigued or dislocated.

Description

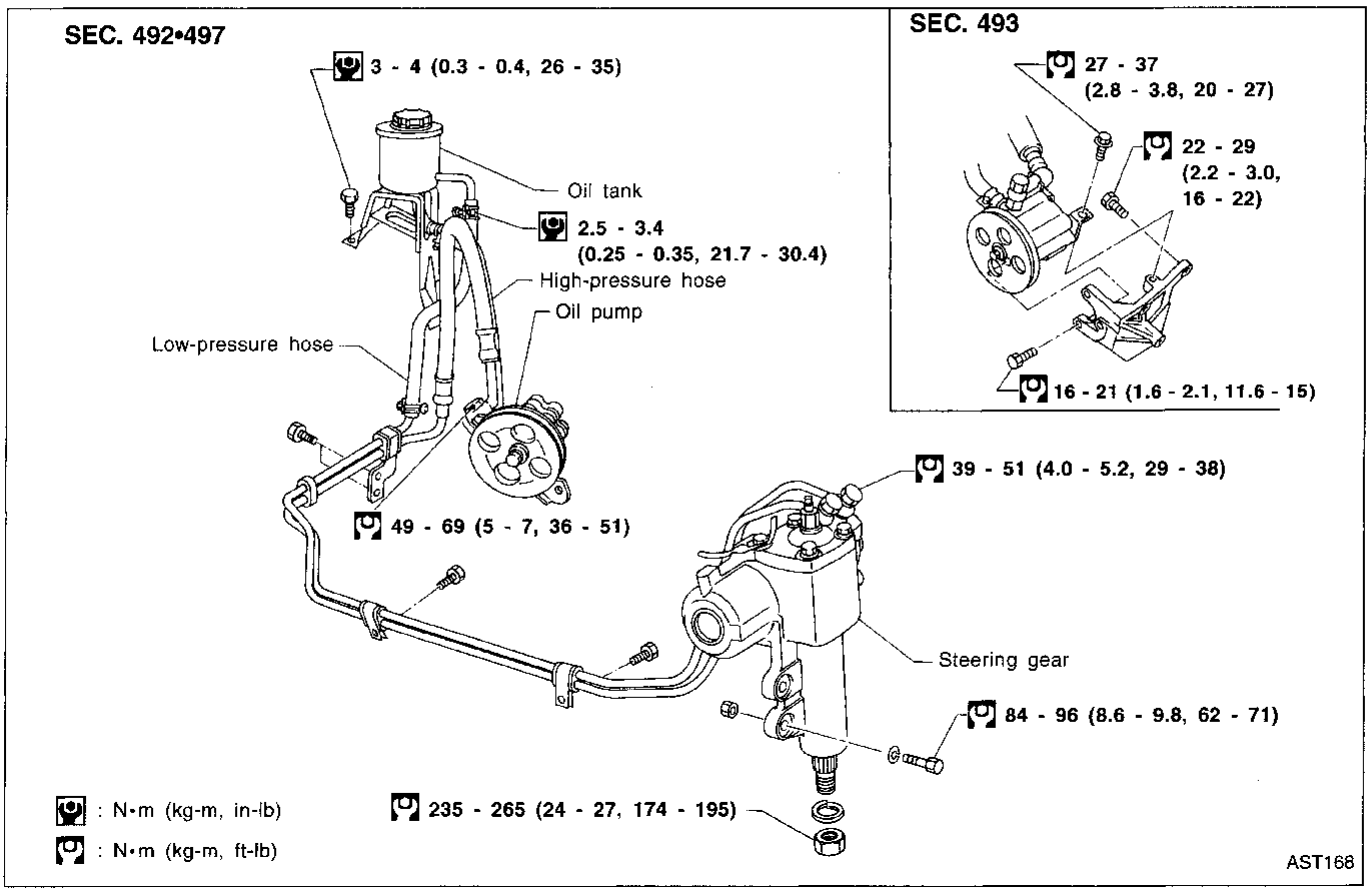

CAUTION:

- **Parts which can be disassembled are strictly limited. Never disassemble parts other than those specified.**
- **Disassemble in as clean a place as possible.**
- **Clean your hands before disassembly.**
- **Do not use rags; use nylon cloths or paper towels.**
- **Follow the procedures and cautions indicated in the Service Manual.**

Removal and Installing

Before removal, clean gear housing and oil pump exteriors using a steam cleaner. Then dry with compressed air.

STEERING GEAR

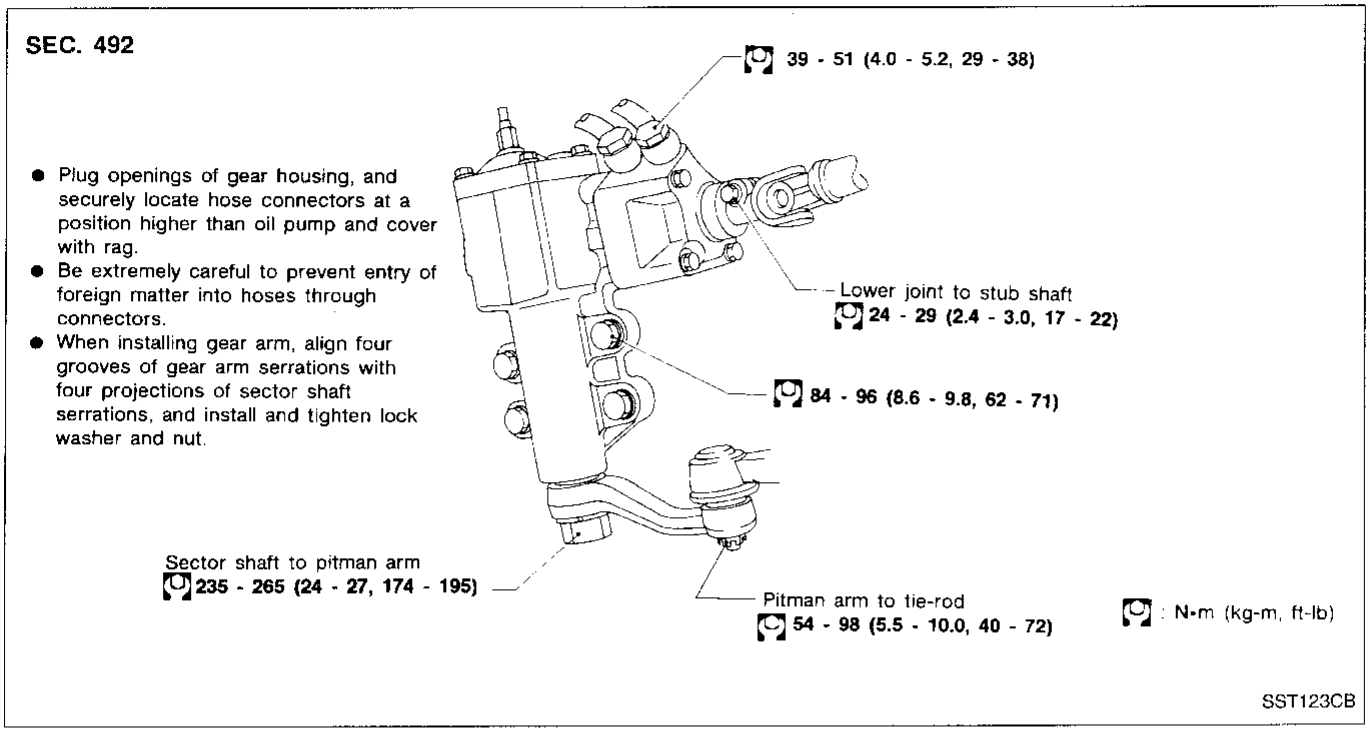

Power Steering Gear Component

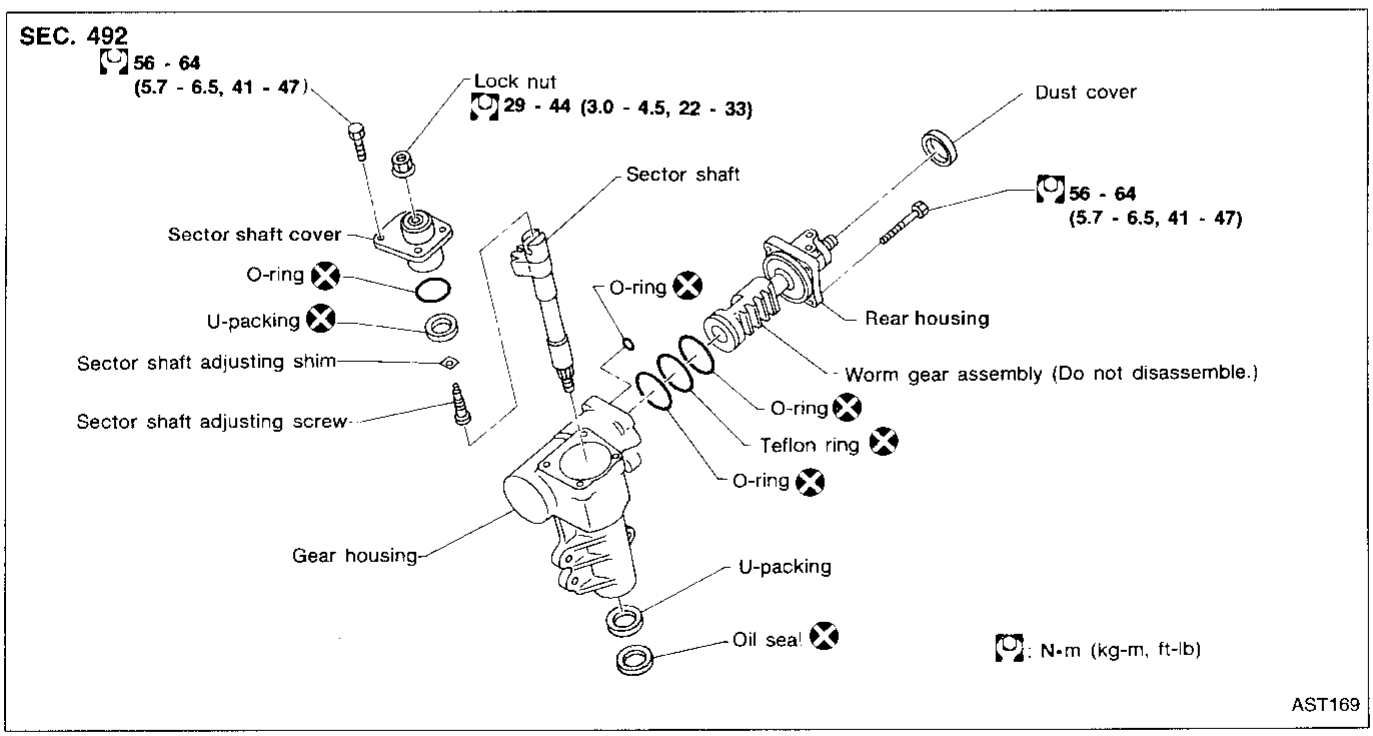

Pre-disassembly Inspection and Adjustment

Before disassembling power steering gear component parts, make sure there is no oil leakage around sealing portion and check steering turning torque as follows:

Check sealing portion.

- Sector shaft cover O-ring
- Sector shaft U-packing
- Sector shaft oil seal
- Rear housing O-ring
- Gear housing O-ring

Discard any oil seal and O-ring which have been removed.
Replace oil seal and O-ring if sealing surface is deformed or cracked.

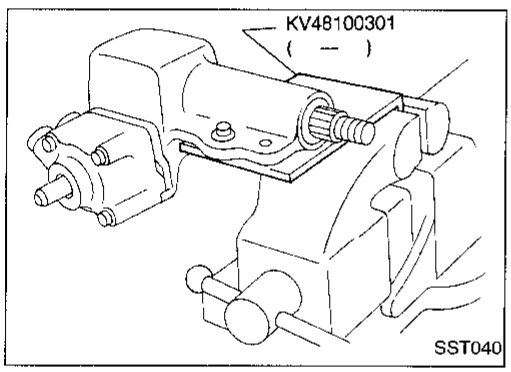

TURNING TORQUE MEASUREMENT

1. Measure turning torque at 360° position.

a. Install steering gear on Tool.

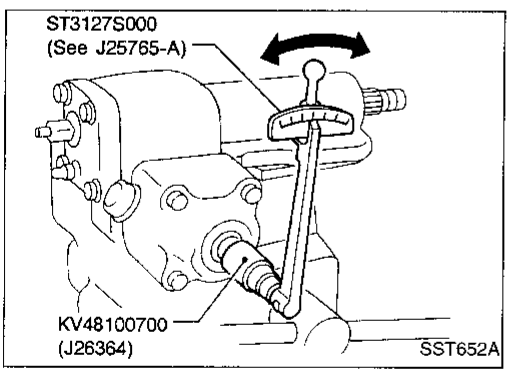

b. Turn stub shaft all the way to right and left several times.

c. Measure turning torque at 360° position from straight-ahead position with Tools.

Turning torque at 360°:
0.15 - 0.78 N·m (1.5 - 8.0 kg-cm, 1.3 - 6.9 in-lb)

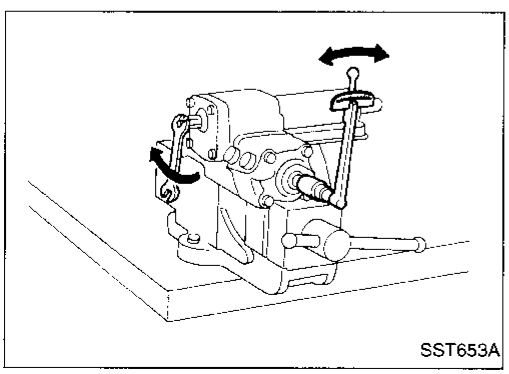

d. Measure turning torque at straight-ahead position.

Straight-ahead position is a position where stub shaft is turned 2.14 turns (two full turns and 50°) from lock position.

Turning torque at straight-ahead position:
0.25 - 1.32 N·m (2.5 - 13.5 kg-cm, 2.2 - 11.7 in-lb) higher than turning torque at 360°

Maximum turning torque:
1.03 - 1.47 N·m (10.5 - 15 kg-cm, 9.1 - 13.0 in-lb)

If turning torque is not within specifications, adjust by turning sector shaft adjusting screw.

Pre-disassembly Inspection and Adjustment (Cont'd)

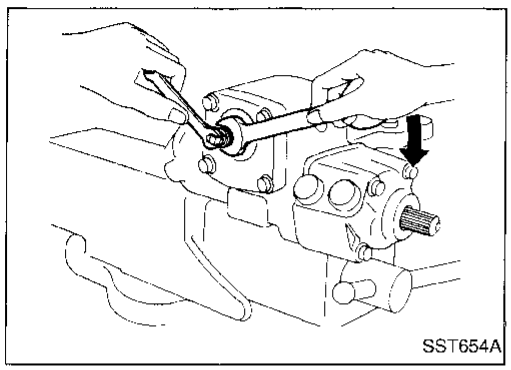

2. Tighten adjusting screw lock nut with tools.

Disassembly

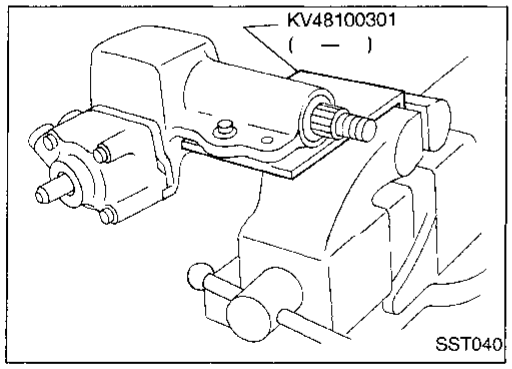

Before disassembly, measure turning torque.

If not within specifications, replace steering gear assembly.

CAUTION:

Oil sealing parts, dust cover, copper washer and snap ring must not be used again after removal.

1. Place steering gear in a vise with Tool.
2. Set worm gear in a straight-ahead position.

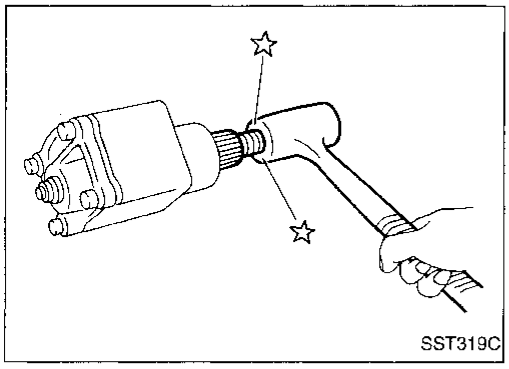

3. Loosen (do not remove) sector shaft cover bolt.
4. Knock out end of sector shaft with a plastic hammer.
5. Remove sector shaft by hand.

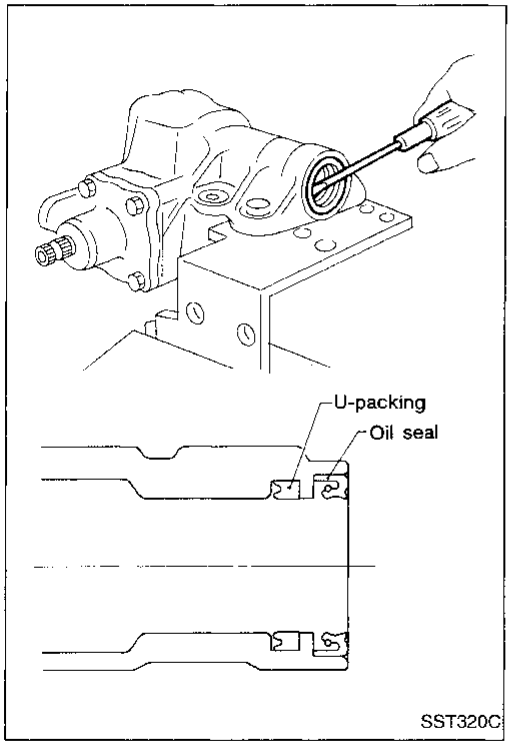

6. Remove oil seal.
7. Remove U-packing.

CAUTION:

When removing oil seal and U-packing, be careful not to scratch gear housing.

Disassembly (Cont'd)

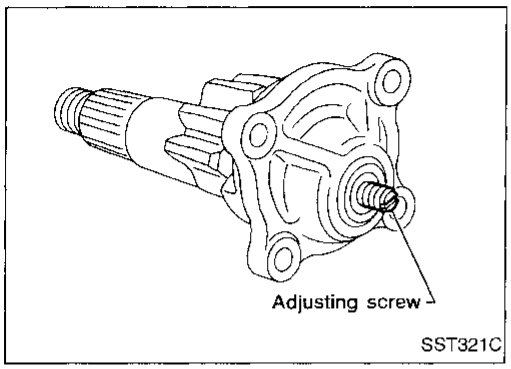

8. Remove lock nut, then loosen adjusting screw using a screwdriver. Separate sector cover and sector shaft.

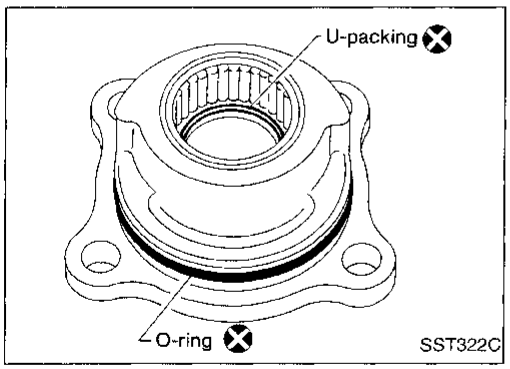

9. Remove O-ring.
10. Remove U-packing.

CAUTION:

- **When removing U-packing, be careful not to scratch sector cover, needle bearing, etc.**
- **Needle bearing cannot be disassembled. If it is damaged, remove sector cover assembly.**

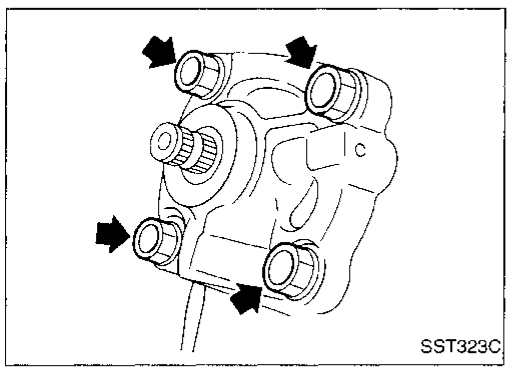

11. Remove dust seal.
12. Remove rear housing bolts.
13. Remove rear housing together with worm gear assembly.

CAUTION:

Worm gear assembly cannot be disassembled. When it is removed, be careful not to disengage worm gear from shaft or allow it to drop.

14. Remove teflon ring and O-ring of worm gear assembly.

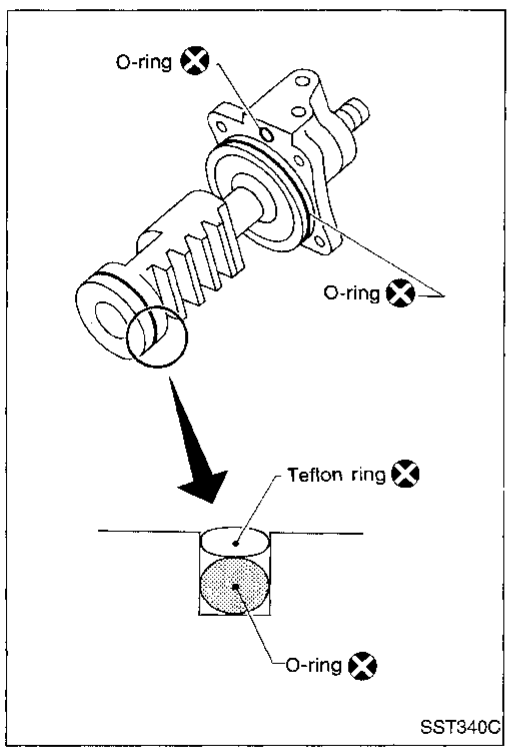

Assembly

1. Install new O-ring on worm gear assembly.
- **Apply a thin coat of ATF to new O-ring.**
2. Install new teflon ring on worm gear assembly.
- **Make sure that teflon ring is seated in correct position.**
3. Install new O-ring into rear housing.

Assembly (Cont'd)

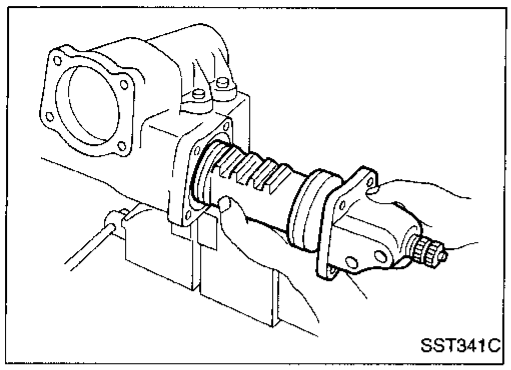

4. Install worm gear assembly with rear housing into the gear housing.

CAUTION:

- **Apply a thin coat of ATF inside gear housing and piston before insertion.**
- **Be careful not to damage teflon ring at piston end when inserting worm gear assembly into gear housing.**

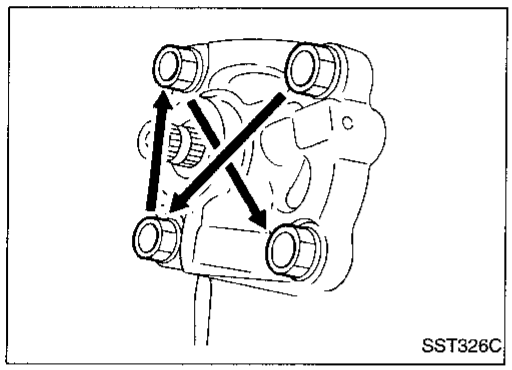

5. Gradually tighten rear housing bolts in a criss-cross fashion.

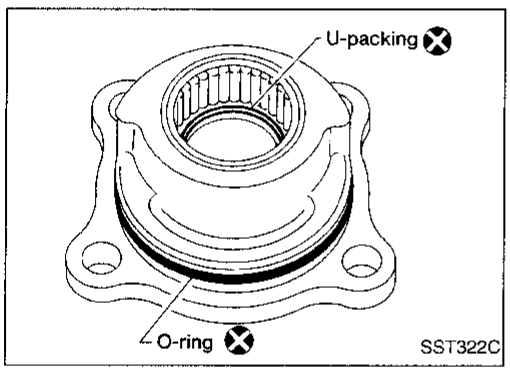

6. Install new O-ring into sector shaft cover.
- **Before installing, apply a thin coat of ATF to O-ring.**

7. Install new U-packing into sector shaft cover.
- **Before installing, apply a thin coat of ATF to U-packing.**
- **Direct grooved side of U-packing to needle bearing.**

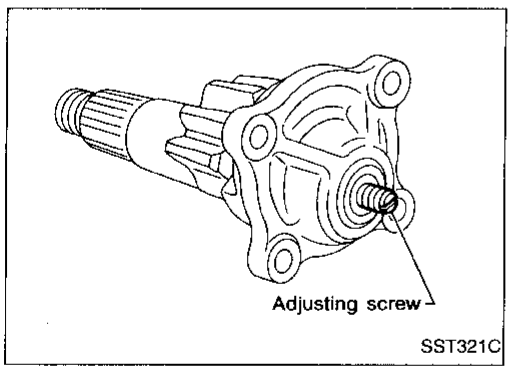

8. Install sector shaft into sector shaft cover.
   Set adjusting screw to its outermost position.
- **Before installing sector shaft, apply multi-purpose grease to adjusting screw and adjusting screw shim.**

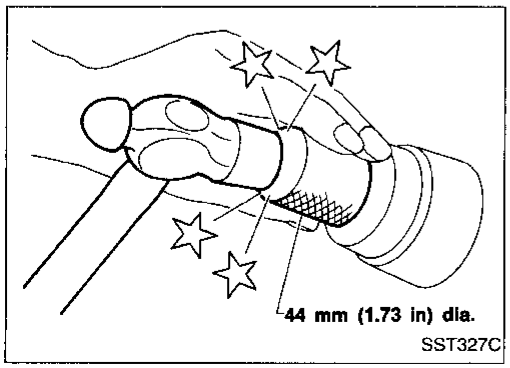

9. Install new oil seal into gear housing with suitable tool.
- **Before installing oil seal, apply multi-purpose grease to oil seal lips.**

Assembly (Cont'd)

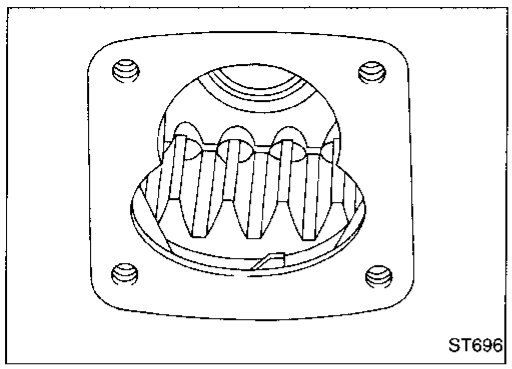

10. Set piston rack at straight-ahead position.

Turn piston rack about 10° to 15° toward yourself with your finger.
This enables smooth insertion of sector gear.

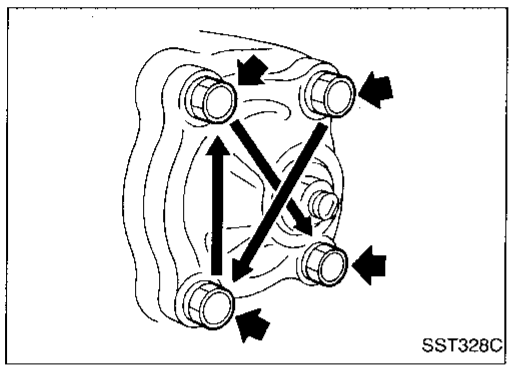

11. Gradually insert sector shaft into gear housing.
12. Tighten sector shaft cover bolts.
13. Set worm gear turning torque by turning sector shaft adjusting screw and locking with lock nut.

Refer to "TURNING TORQUE MEASUREMENT", "Pre-disassembly and Adjustment", ST-22.

- **If set and adjusting turning torque is considerably different from the value before disassembly, replace the entire assembly.**

14. Check sector shaft end play in neutral position.
    End play:
    Less than 0.1 mm (0.004 in)
    If not within specification, adjust it with adjusting screw.
15. Check worm gear preload. If not within specification, readjust it.

Description

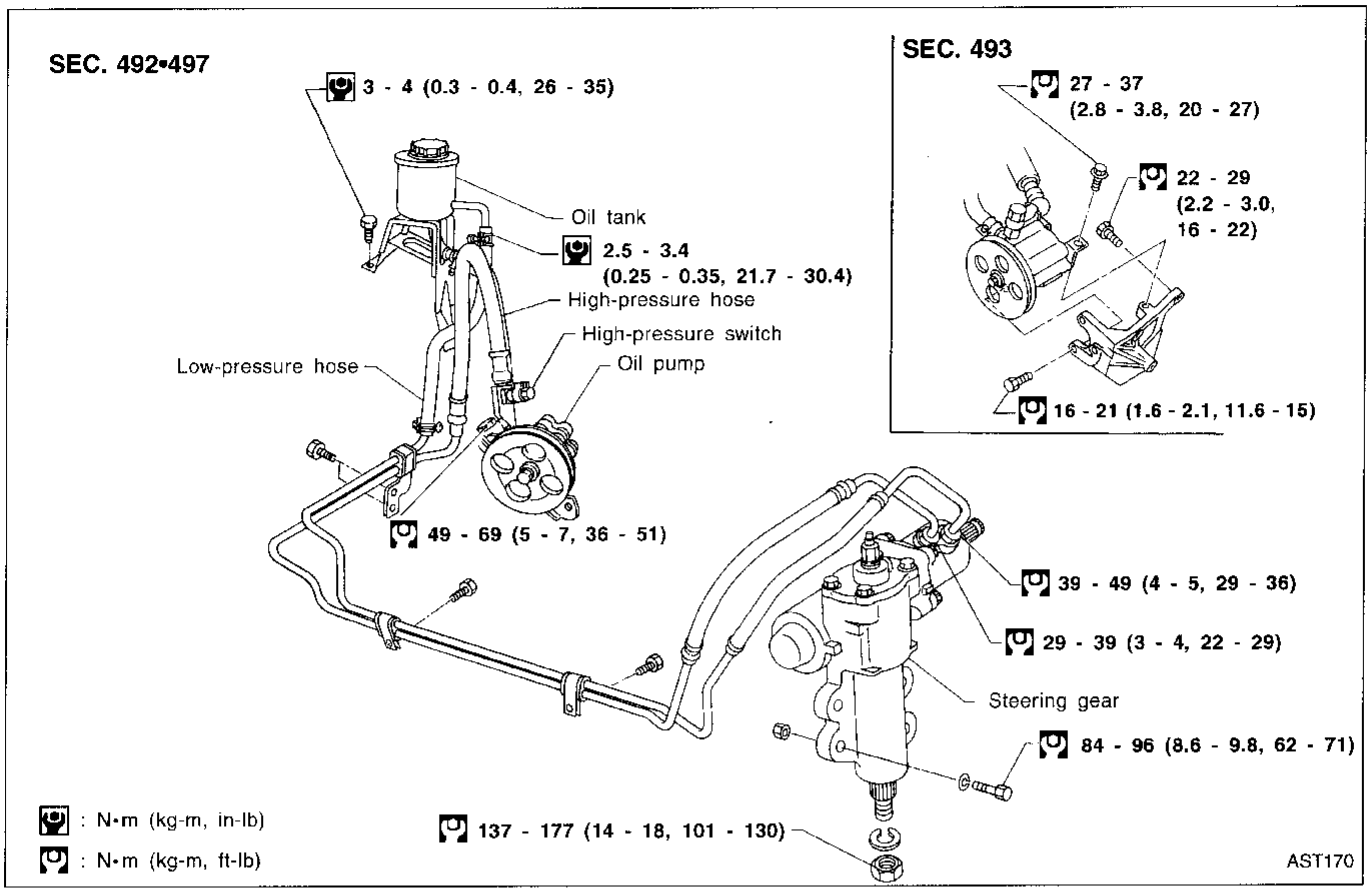

This power steering adopts spool valve control which was developed in a technical tie-up with the ZF Company.

Only the sealing parts can be replaced. The remaining parts must be replaced as an assembly.

CAUTION:

- **Parts which can be disassembled are strictly limited. Never disassemble parts other than those specified.**
- **Disassemble in as clean a place as possible.**
- **Clean your hands before disassembly.**
- **Do not use rags; use nylon cloths or paper towels.**
- **Follow the procedures and cautions indicated in the Service Manual.**

Removal and Installing

Before removal, clean gear housing and oil pump exteriors using a steam cleaner. Then dry with compressed air.

STEERING GEAR

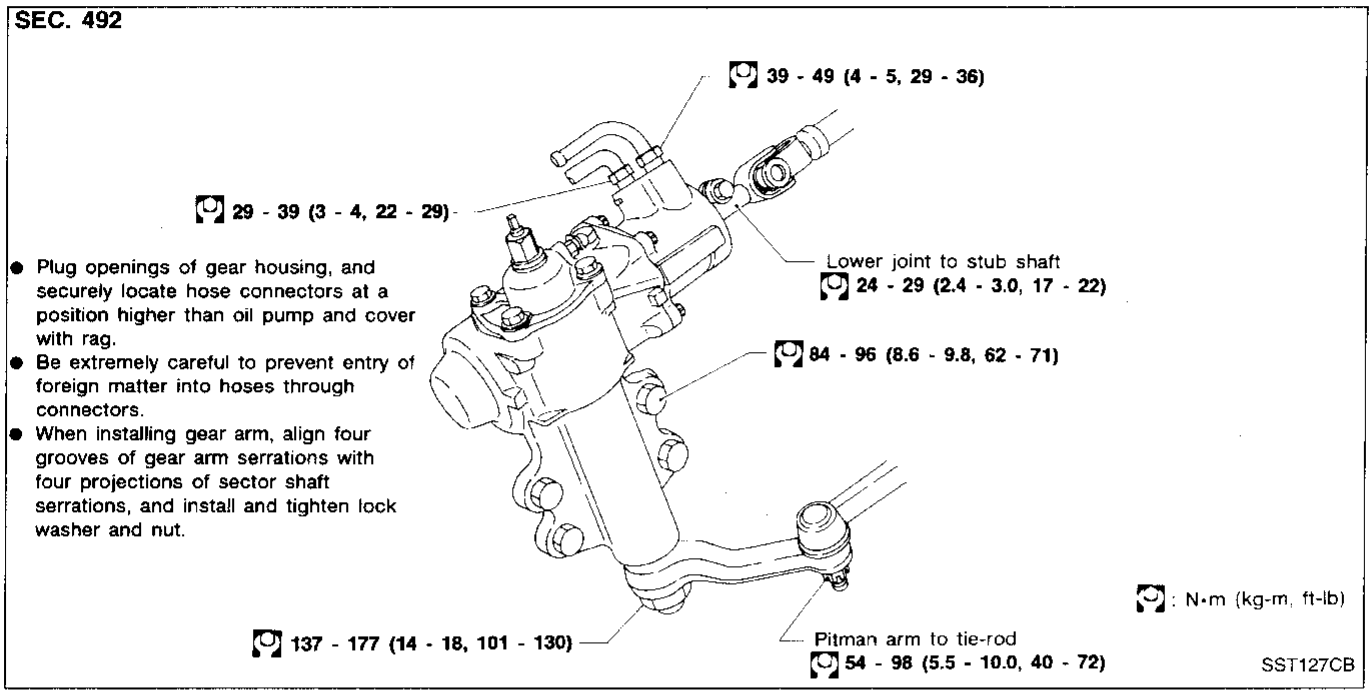

- Plug openings of gear housing, and securely locate hose connectors at a position higher than oil pump and cover with rag.
- Be extremely careful to prevent entry of foreign matter into hoses through connectors.
- When installing gear arm, align four grooves of gear arm serrations with four projections of sector shaft serrations, and install and tighten lock washer and nut.

Power Steering Gear Component

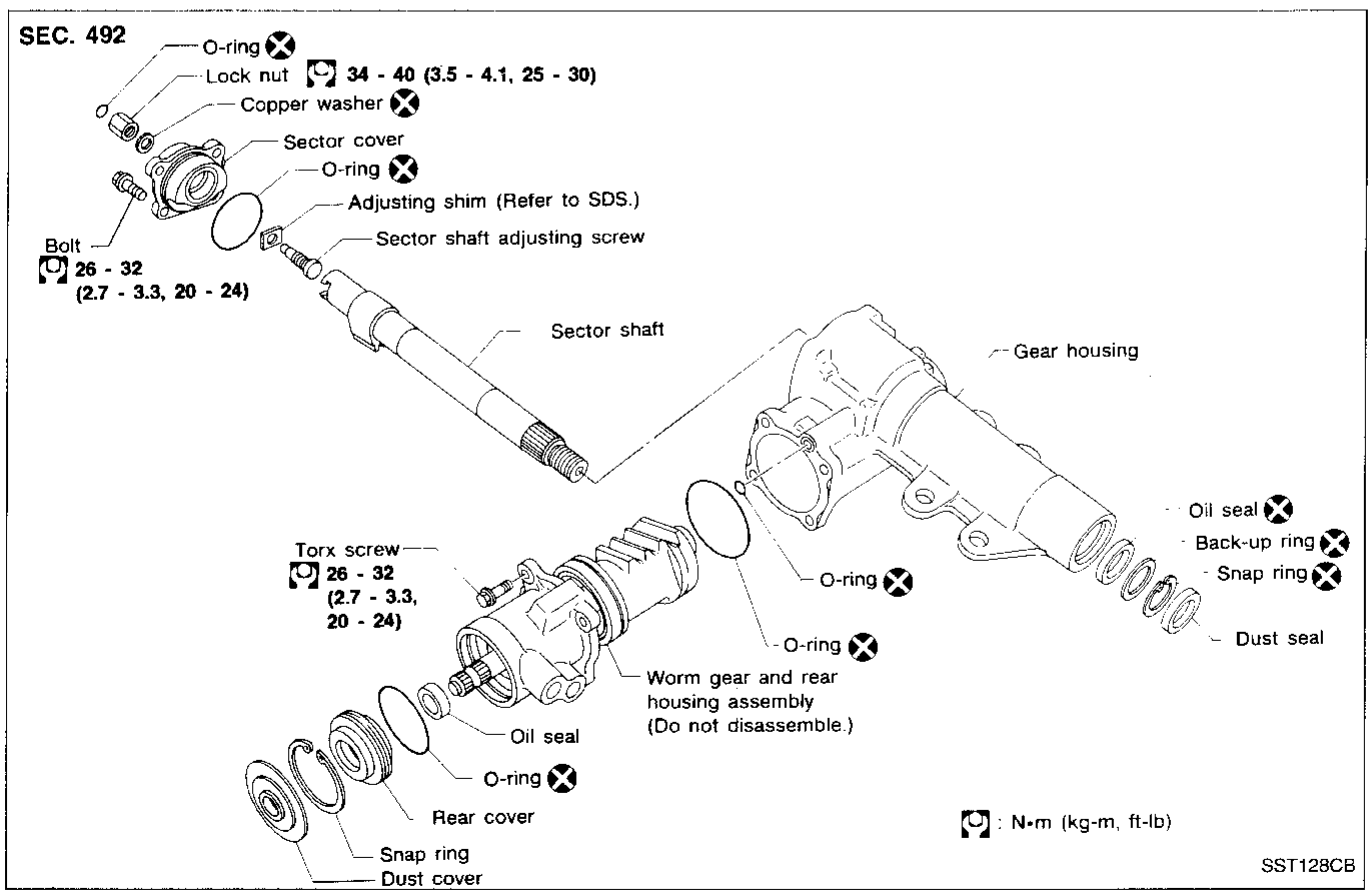

Pre-disassembly Inspection and Adjustment

Before disassembling power steering gear component parts, make sure there is no oil leakage around sealing portion and check steering turning torque as follows:

Check sealing portion.

- Adjusting screw nut O-ring
- Sector shaft cover O-ring
- Sector shaft oil seal
- Rear cover oil seal and O-ring
- Rear housing O-ring
- Gear housing O-ring

Discard any oil seal and O-ring which have been removed. Replace oil seal and O-ring if sealing surface is deformed or cracked.

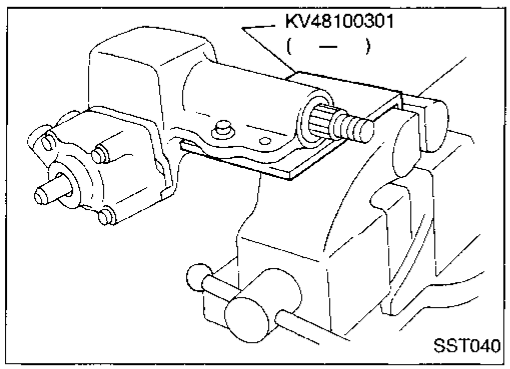

TURNING TORQUE MEASUREMENT

1. Measure turning torque at 360° position.

a. Install steering gear on Tool.

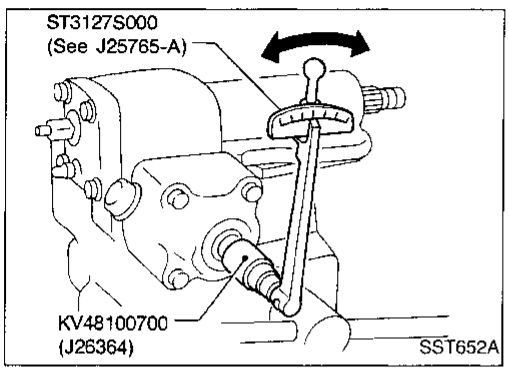

b. Turn stub shaft all the way to right and left several times.

c. Measure turning torque at 360° position from straight-ahead position with Tools.

Turning torque at 360°:
0.7 - 1.2 N·m (7 - 12 kg-cm, 6.1 - 10.4 in-lb)

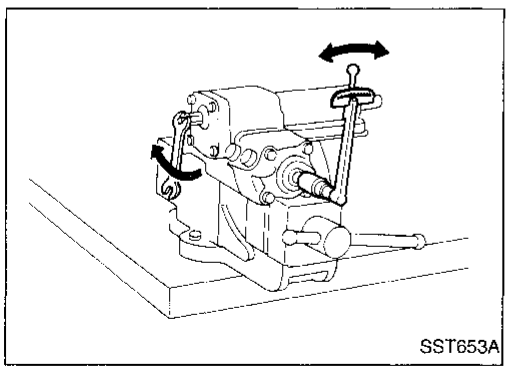

d. Measure turning torque at straight-ahead position.

Straight-ahead position is a position where stub shaft is turned 2.14 turns (two full turns and 50°) from lock position.

Turning torque at straight-ahead position:
0.1 - 0.4 N·m (1 - 4 kg-cm, 0.9 - 3.5 in-lb)
higher than turning torque at 360°

If turning torque is not within specifications, adjust by turning sector shaft adjusting screw.

Pre-disassembly Inspection and Adjustment (Cont'd)

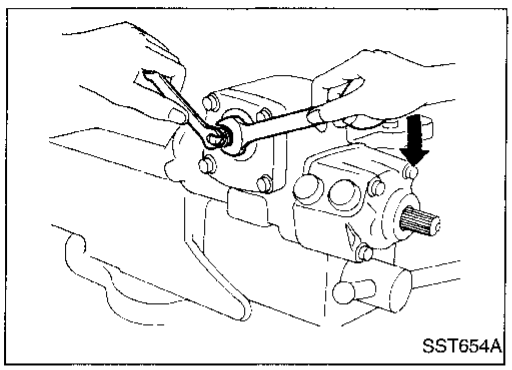

2. Tighten adjusting screw lock nut with tools.

Disassembly

Before disassembly, measure turning torque.

If not within specifications, replace steering gear assembly.

CAUTION :

Oil sealing parts, dust cover, copper washer and snap ring must not be used again after removal.

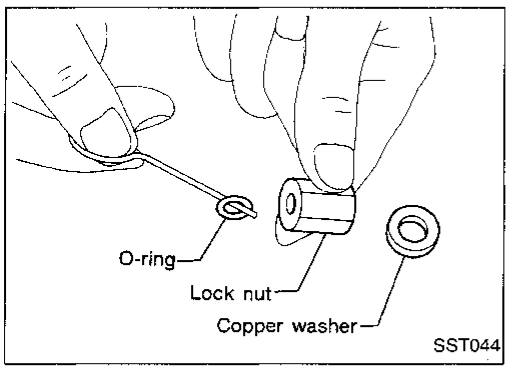

ADJUSTING SCREW LOCK NUT O-RING

Remove adjusting screw lock nut, and replace O-ring.

SECTOR SHAFT OIL SEAL

1. Set stub shaft in a straight-ahead position.

Straight-ahead position is a position where stub shaft is turned 2.14 turns (two full turns and 50°) from lock position.

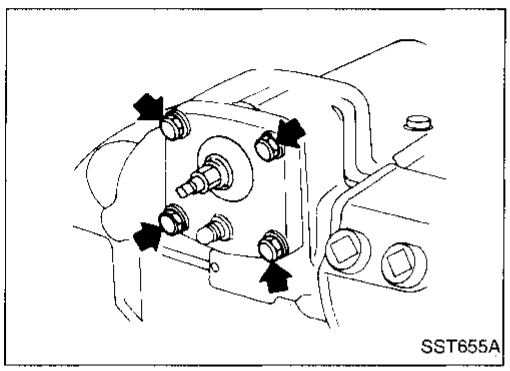

2. Disconnect sector shaft cover bolt.

Do not turn lock nut unless necessary; otherwise it will damage O-ring, resulting in an oil leak.

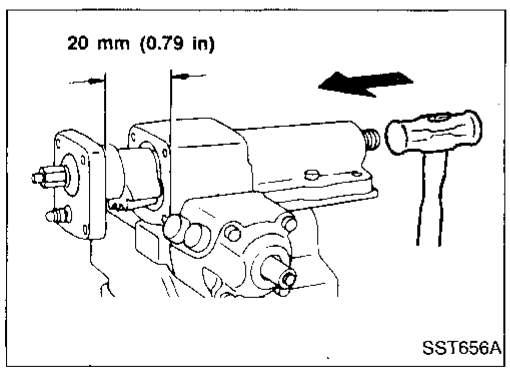

3. Draw out sector shaft.

Knock out end of sector shaft approximately 20 mm (0.79 in).

Disassembly (Cont'd)

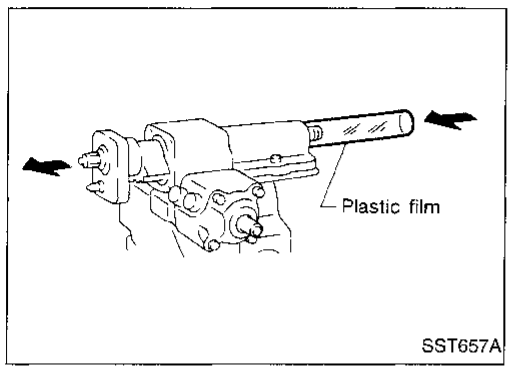

SST657A

4. Connect a roll of plastic film to sector shaft.
   Plastic film:
   Thickness 0.1 mm (0.004 in)
   Length x width
   200 x 200 mm (7.87 x 7.87 in)
5. Pull out sector shaft by hand.

Attach plastic film to needle bearings located at two places inside gear housing while simultaneously pulling out sector shaft so that bearings will not drop into housing.

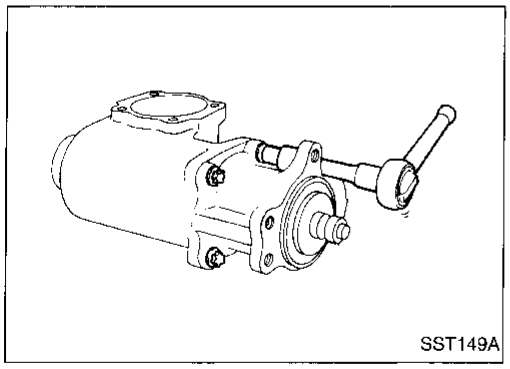
SST149A

REAR HOUSING O-RING

1. Remove torx screw.

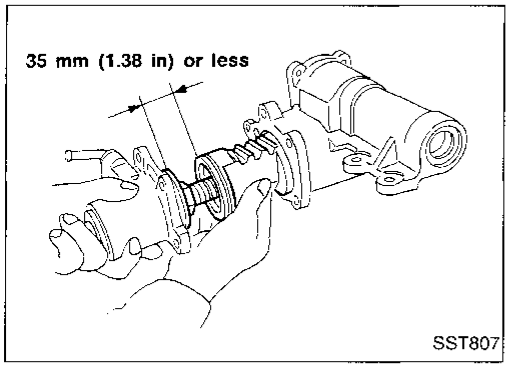

SST807

2. Remove rear housing together with worm gear assembly.

CAUTION:

- **When worm gear assembly is removed, piston may turn and come off under its own weight. Hold piston to prevent it from turning.**
- **If piston-to-rear housing clearance exceeds 35 mm (1.38 in) recirculating ball will be out of groove of worm gear; do not reinstall piston but replace the entire assembly.**
- **Be careful not to damage teflon ring at piston end when removing.**

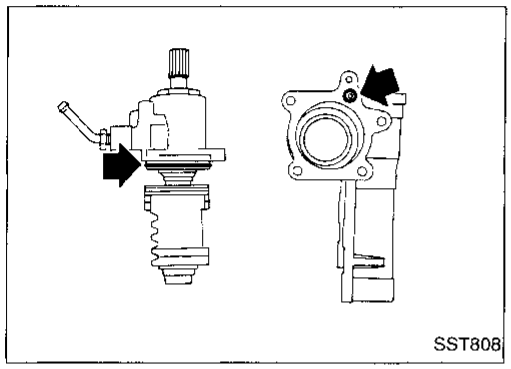
SST808

3. Remove O-rings.

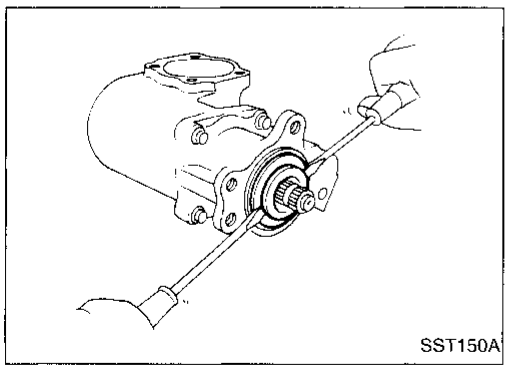
SST150A

REAR COVER O-RING AND OIL SEAL

1. Remove snap ring, then rear cover.
2. Remove O-ring and oil seal.

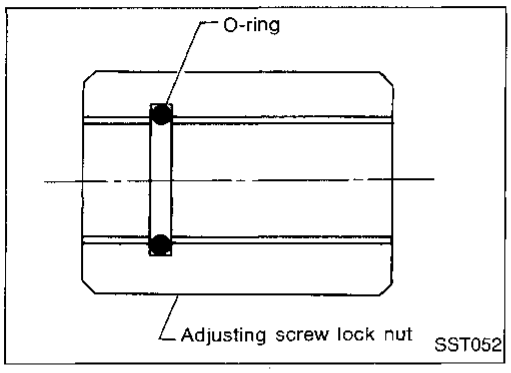

Assembly

ADJUSTING SCREW LOCK NUT O-RING

Insert new O-ring into adjusting screw lock nut.

- **Before inserting, apply a thin coat of petroleum jelly to O-ring.**
- **Insert O-ring to make sure it fits into groove.**

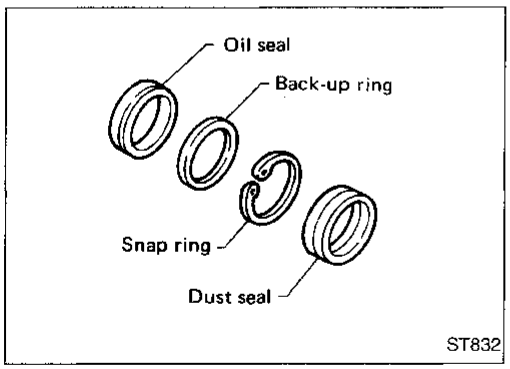

SECTOR SHAFT OIL SEAL

- **When installing, be sure to use new oil seal, dust seal, back-up ring and snap ring.**
- **Before installing, apply a thin coat of petroleum jelly to new oil seal and dust seal.**

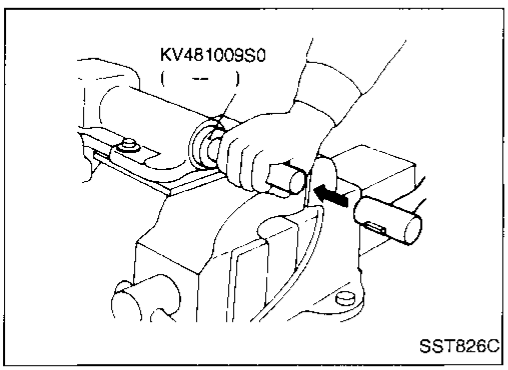

1. Press new oil seal and then install back-up ring with Tool.

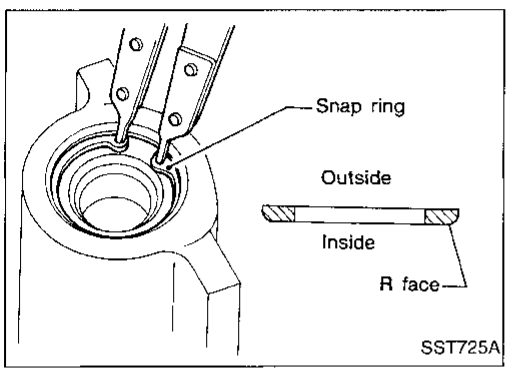

2. Install a new snap ring into gear housing.

CAUTION:

- **Turn snap ring to make sure it fits into groove.**
- **Always install snap ring with R face facing inward.**

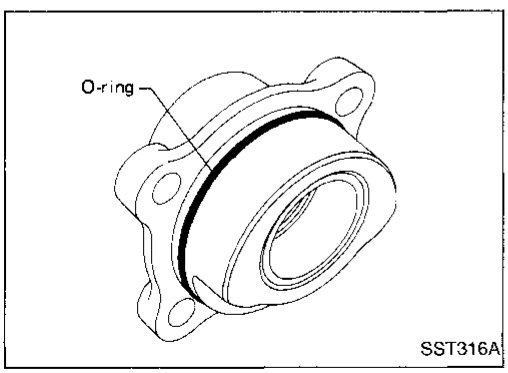

3. Press a new dust seal.
4. Fit new O-ring into sector shaft cover.

- **Before installing, apply a thin coat of petroleum jelly to O-ring.**
- **Make sure that O-ring is installed properly and is not damaged by sector shaft.**

Assembly (Cont'd)

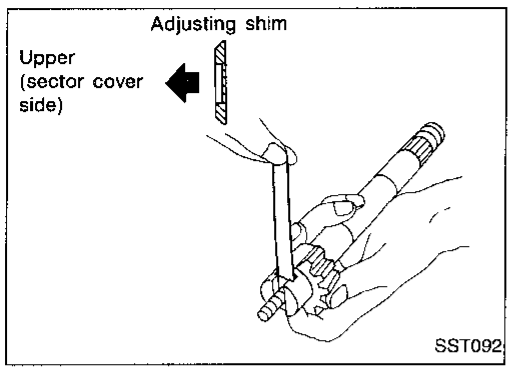

SECTOR SHAFT END PLAY

Select suitable adjusting shim and adjust end play between sector shaft and adjusting screw.

Sector shaft end play:
0.01 - 0.03 mm (0.0004 - 0.0012 in)
Sector shaft adjusting screw shims:
Refer to SDS, ST-42.

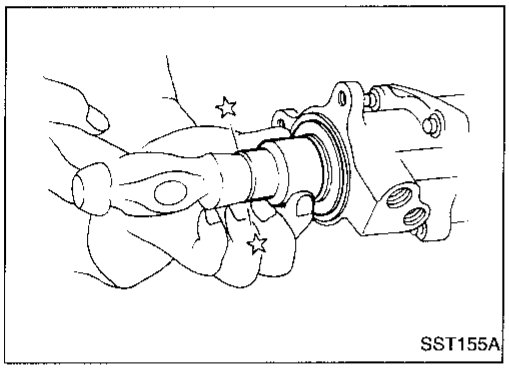

REAR COVER O-RING AND OIL SEAL

1. Install new O-ring and oil seal.
2. Install rear cover, then install snap ring.

CAUTION:

a. Turn snap ring to make sure it fits into grooves.
b. Always install snap ring with its rounded edge facing rear cover.

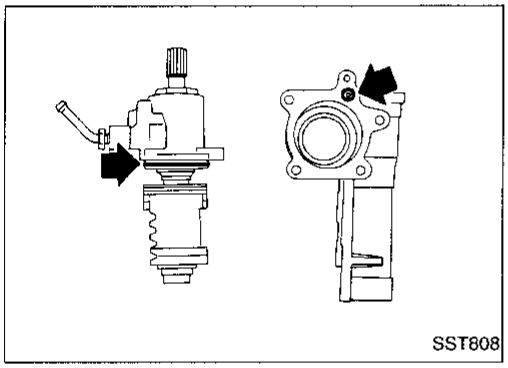

REAR HOUSING O-RING

1. Install new O-rings.

a. Before installing, apply a thin coat of petroleum jelly to O-ring.
b. Make sure O-ring is installed correctly and is not damaged by worm gear.

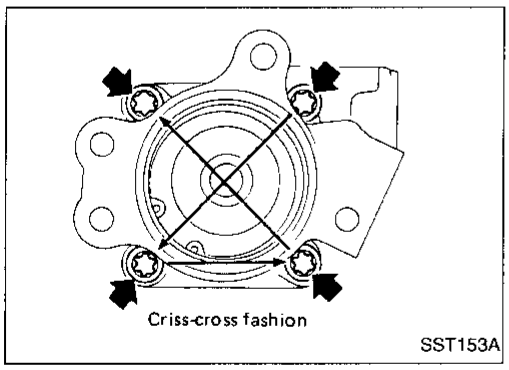

2. Gradually insert worm gear and rear housing assembly into gear housing, being careful not to damage oil seal and O-rings.
3. Install torx screws.

Assembly (Cont'd)

SECTOR SHAFT

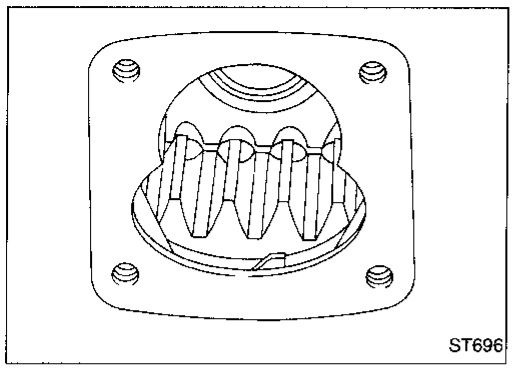

1. Set piston rack at straight-ahead position.

Turn piston rack about 10° to 15° toward yourself with your finger. This permits smooth insertion of sector gear.

2. Wrap vinyl tape around serration area of sector shaft.

Vinyl tape prevents oil seal lip from being damaged during insertion.

3. Gradually insert sector shaft into gear housing, being careful not to damage oil seal.

When inserting sector shaft into gear housing, remove plastic film. Be careful not to drop bearings into gear housing.

4. Tighten sector shaft cover bolts.
5. Check turning torque and steering gear preload.

Refer to "TURNING TORQUE MEASUREMENT", "Pre-disassembly Inspection and Adjustment", ST- 29.

- **If turning torque is considerably different from the value before disassembly, replace the entire assembly.**

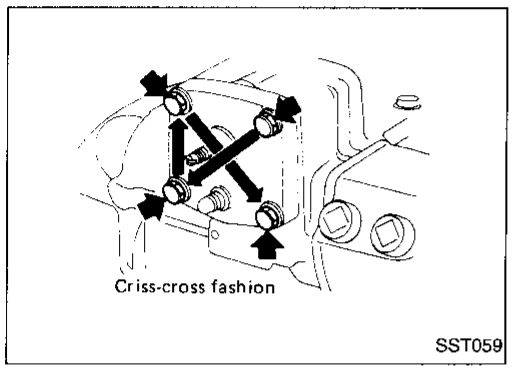

Disassembly and Assembly

SEC. 490

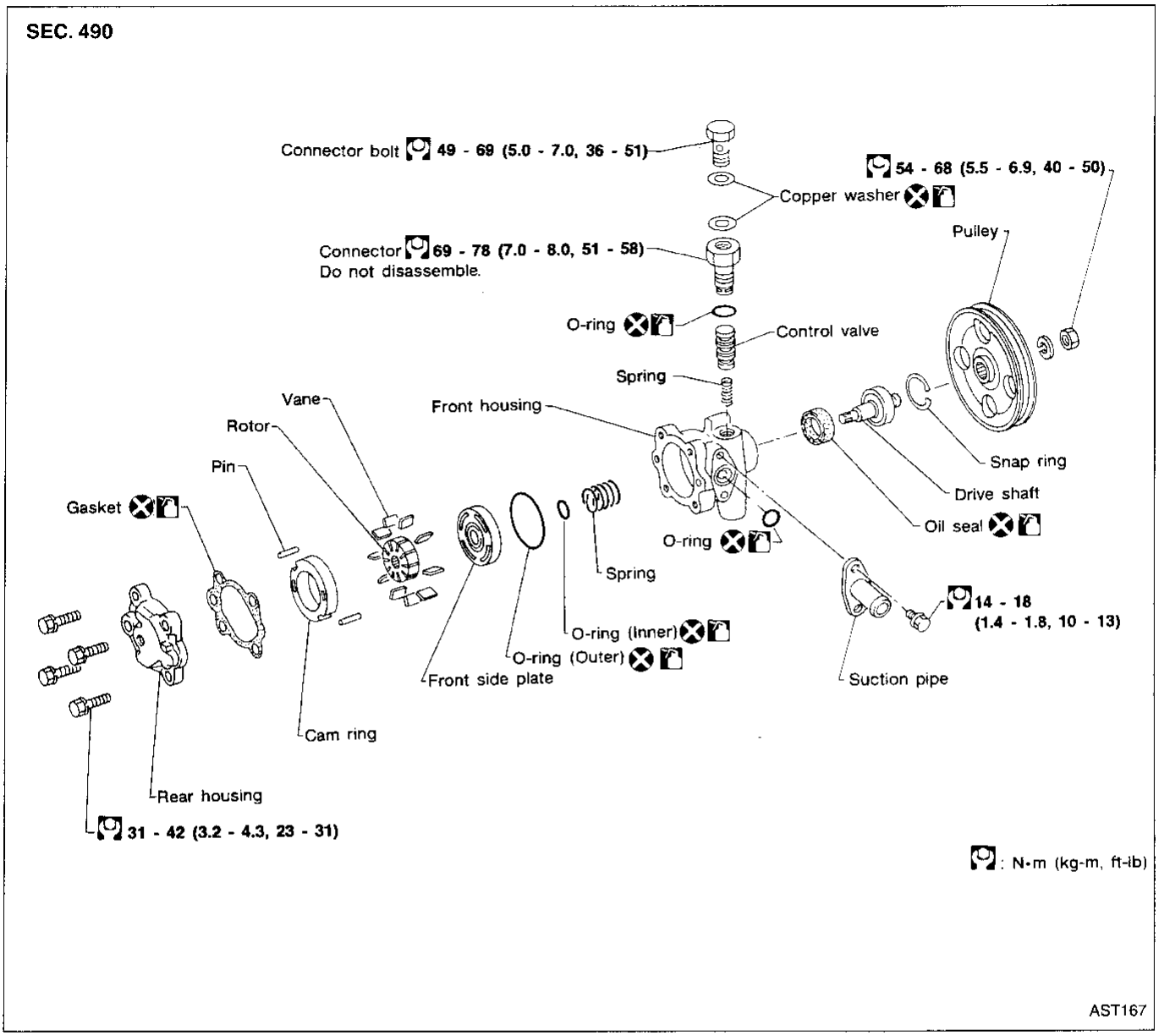

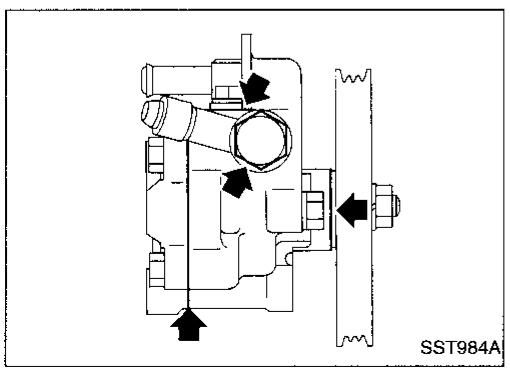

Pre-disassembly Inspection

Disassemble the power steering oil pump only if the following items are found.

- Oil leak from any point shown in the figure.
- Deformed or damaged pulley.
- Poor performance.

Inspection

PULLEY AND PULLEY SHAFT

- If pulley is cracked or deformed, replace it.
- If fluid leak is found around the pulley shaft, replace the oil seal.

Disassembly

CAUTION:

- **Parts which can be disassembled are strictly limited. Never disassemble parts other than those specified.**
- **Disassemble in as clean a place as possible.**
- **Clean your hands before disassembly.**
- **Do not use rags; use nylon cloths or paper towels.**
- **When disassembling and reassembling, do not let foreign matter enter or contact the parts.**

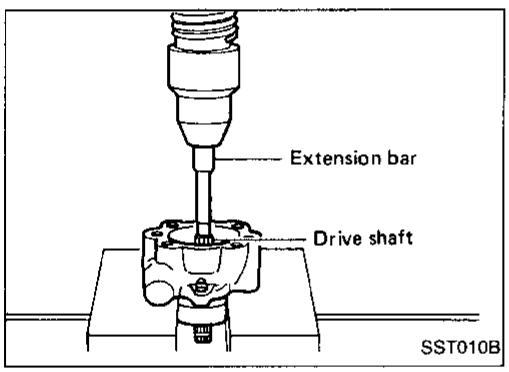

- Remove snap ring, then draw drive shaft out.
- **Be careful not to drop drive shaft.**

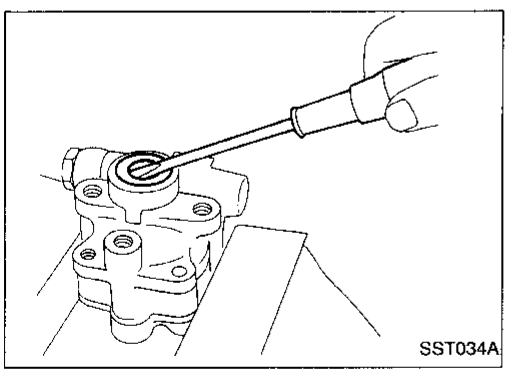

- Remove oil seal.
- **Be careful not to damage front housing.**

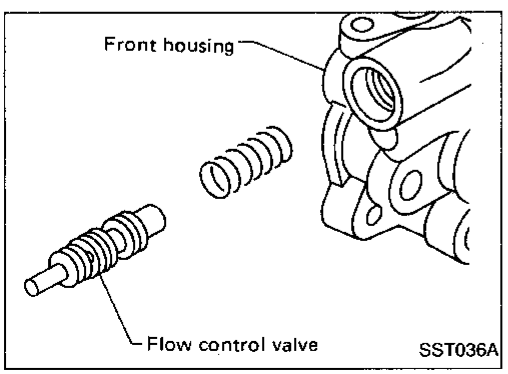

- Remove connector.
- **Be careful not to drop control valve.**

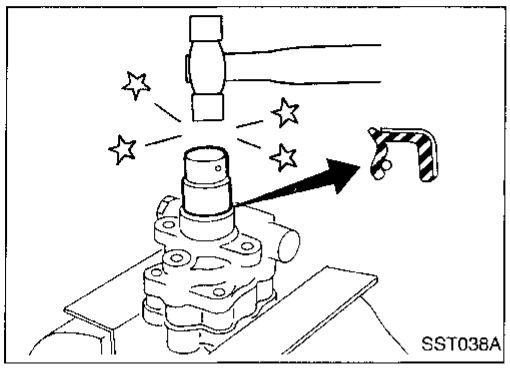

Assembly

Assemble oil pump, noting the following instructions.

- Make sure O-rings and oil seal are properly installed.
- Always install new O-rings and oil seal.
- Be careful of oil seal direction.
- Cam ring, rotor and vanes must be replaced as a set if necessary.
- When assembling, coat each part with ATF.

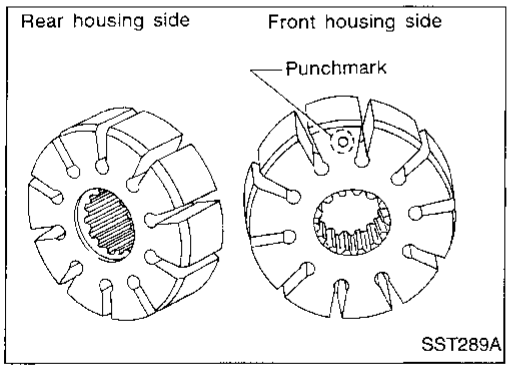

- Pay attention to the direction of rotor.

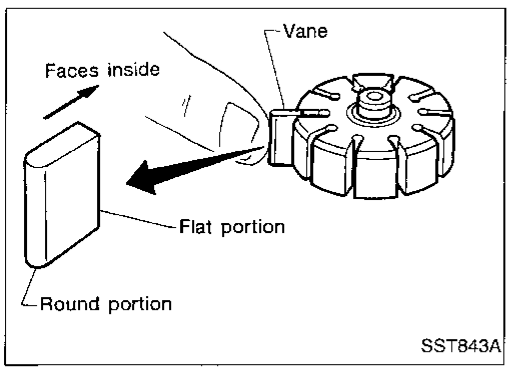

- When assembling vanes to rotor, rounded surfaces of vanes must face cam ring side.

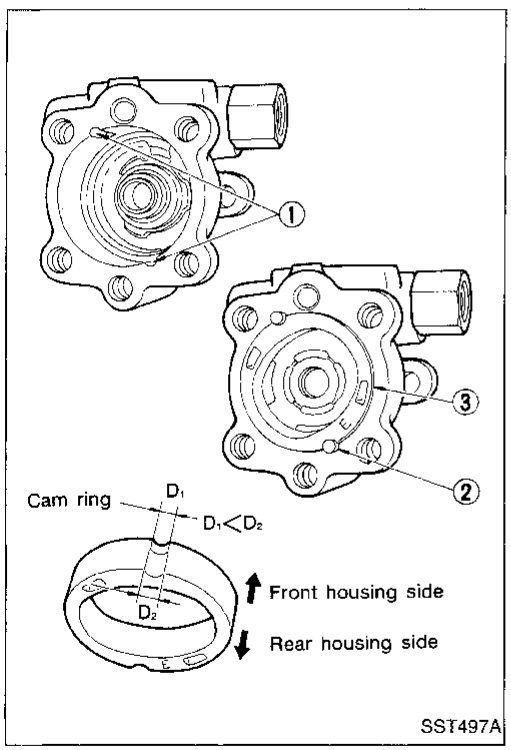

- Insert pin ② into pin groove ① of front housing and front side plate. Then install cam ring ③ as shown at left.

  Cam ring:

  D_1 is less than D_2

Removal and Installation

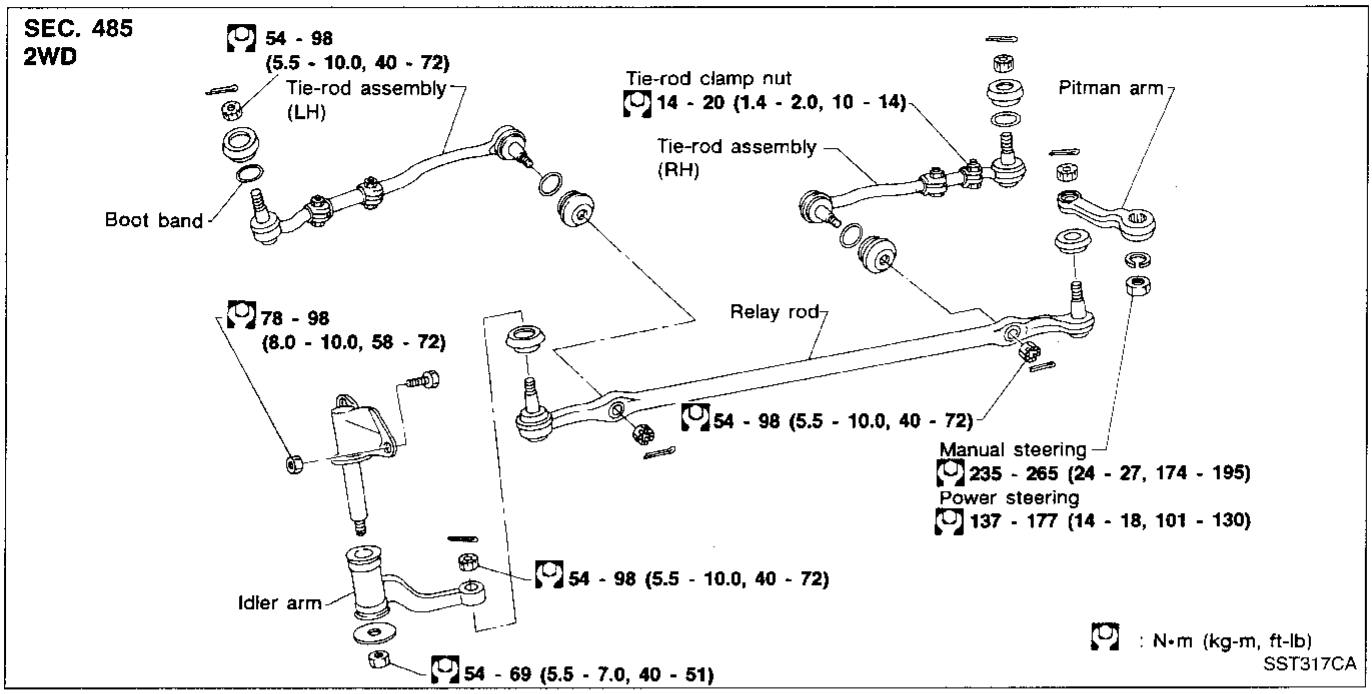

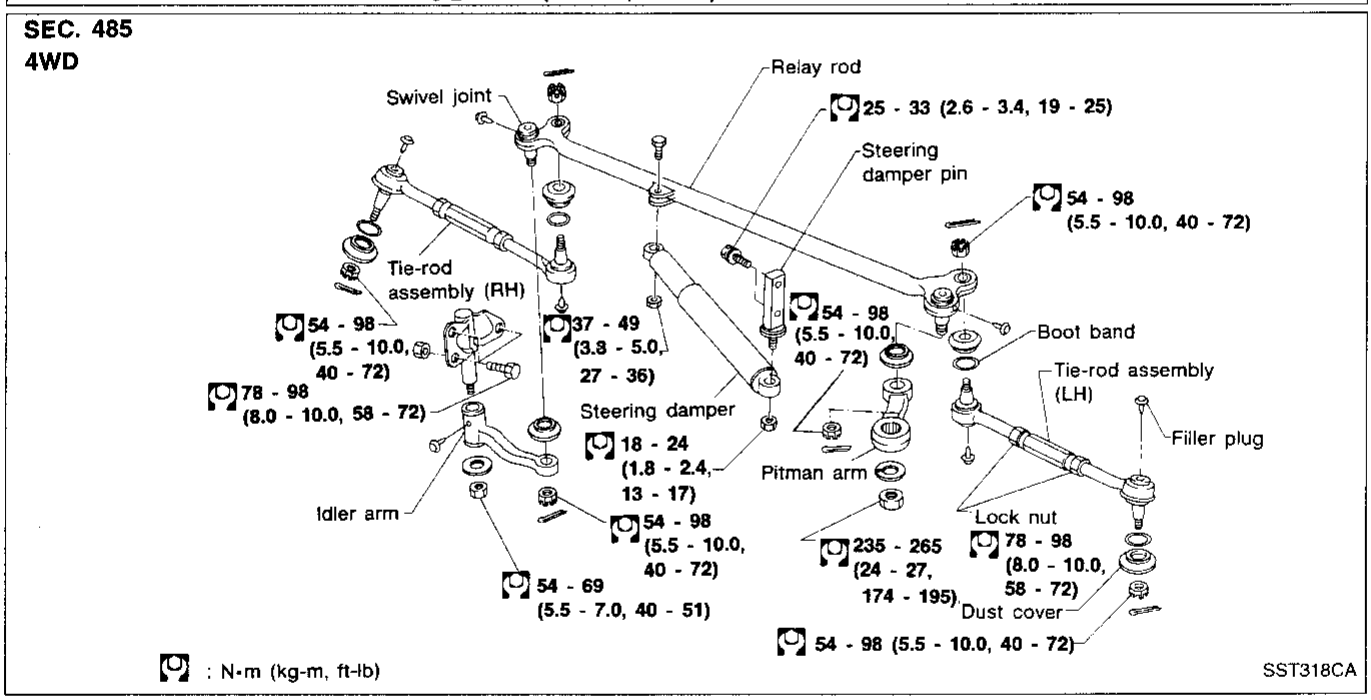

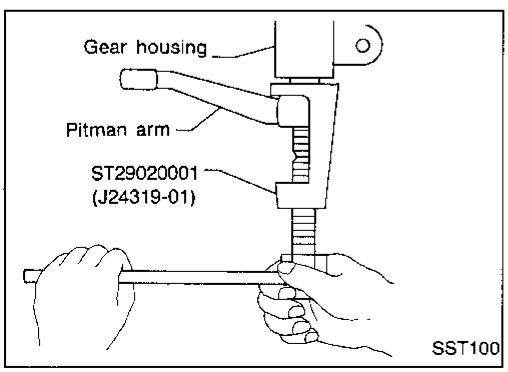

Remove pitman arm with Tool.

Removal and Installation (Cont'd)

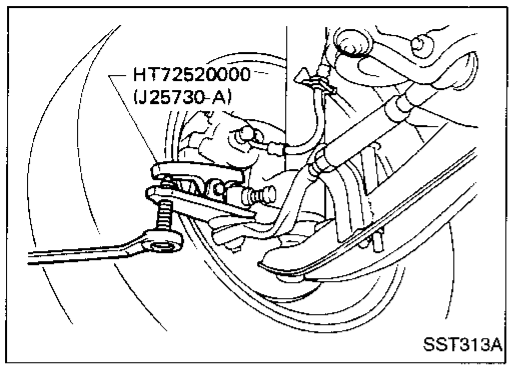

Remove tie-rod from knuckle arm with Tool.

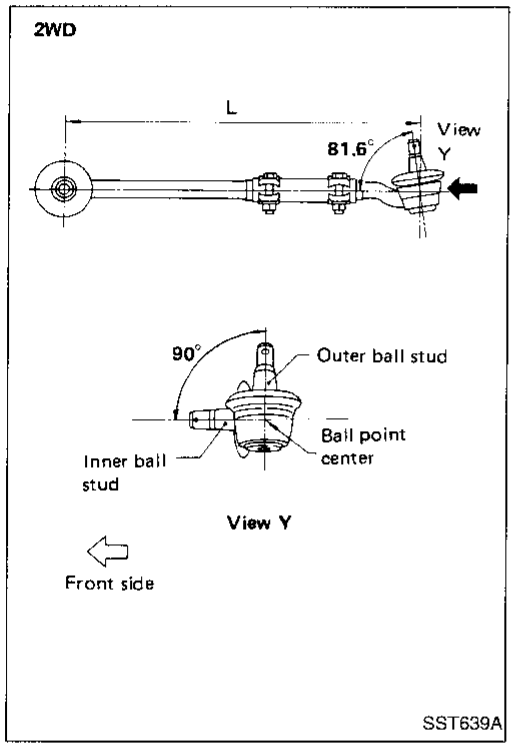

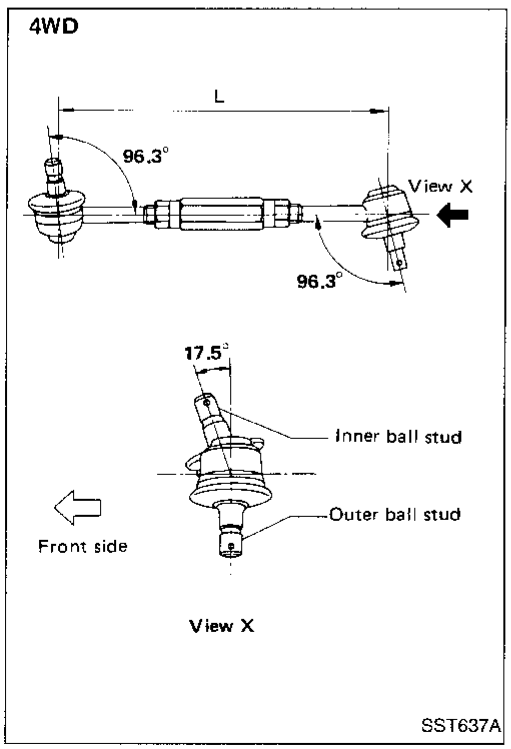

Disassembly

IDLER ARM ASSEMBLY

- Apply coat of multi-purpose grease to bushing.
- Press bushing into idler body, and insert shaft of idler bracket carefully until bushing protrudes.

CROSS ROD AND TIE-ROD

1. When tie-rod ball joints and tie-rod bar are separated, adjust tie-rod length correctly.
   Adjustment should be done between ball stud centers.
2. Lock tie-rod clamp nut so that ball joint on outer ball stud is as follows with respect to that on inner ball stud.
   L: Standard
   344 mm (13.54 in) ... 2WD
   281 mm (11.06 in) ... 4WD

CAUTION:
Make sure that tie-rod bars are screwed into tie-rod tube more than 35 mm (1.38 in).

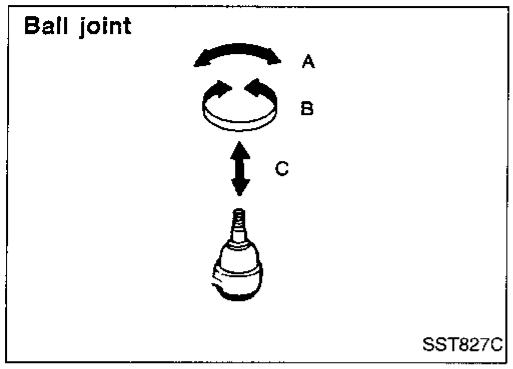

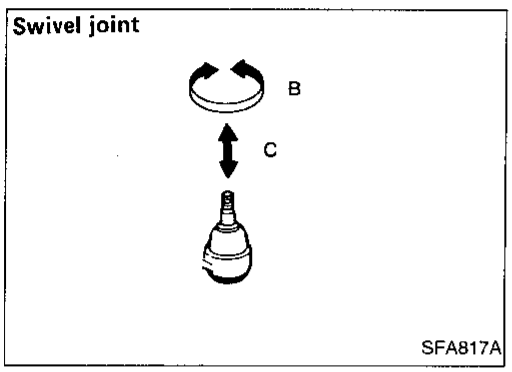

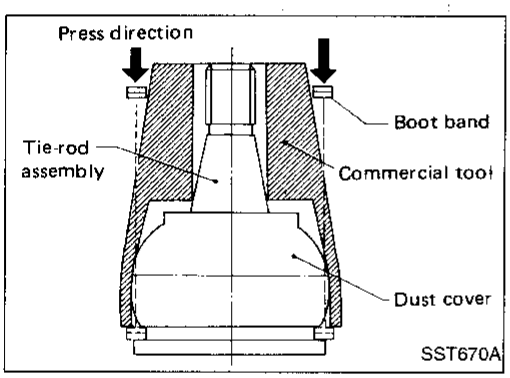

Inspection

BALL JOINT AND SWIVEL JOINT

1. Check joints for play. If ball or swivel stud is worn and play in axial direction is excessive or joint is hard to swing, replace as a complete unit.
   Swinging force (Measure point: Cotter pin hole) "A":
   Ball joint
   10.8 - 107.9 N (1.1 - 11.0 kg, 2.4 - 24.3 lb)
   Rotating torque "B":
   Ball joint
   0.5 - 4.9 N·m (5 - 50 kg-cm, 4.3 - 43.4 in-lb)
   Swivel joint
   0.5 - 4.9 N·m (5 - 50 kg-cm, 4.3 - 43.4 in-lb)
   Axial end play "C":
   Ball joint
   0.1 - 0.8 mm (0.004 - 0.031 in)
   Swivel joint
   0.1 - 1.0 mm (0.004 - 0.039 in)
2. Check condition of dust cover. If it is cracked excessively, replace dust cover.

- When replacing dust cover, be careful not to damage it.
- Lubricate joint with multi-purpose grease, if necessary.
- When installing boot band with commercial service tool, be careful not to overexpand it. Refer to ST-4.

CAUTION:
Be careful not to apply grease or oil to taper of joint.

IDLER ARM ASSEMBLY

- Check rubber bushing of idler arm for breakage, wear or play, and if necessary replace.
- Lubricate idler arm assembly with multi-purpose grease, if necessary.
  When lubricating, refer to "BALL JOINT AND SWIVEL JOINT".

CROSS ROD AND TIE-ROD

Check tie-rod and cross rod for breakage, bends or cracks, and replace with a new one if necessary.

STEERING DAMPER

Check for oil leaking from damper, and replace if necessary.

FIXING LOCATION

- Check fixing location (nuts and cotter pins) for looseness, play or breakage.
- When looseness or play is found, check for wear on tapered portion of joints, gear arm of idler arm.
- When reassembling each joint, use new cotter pins.

General Specifications

Steering column type (Collapsible)	Manual steering	Power steering	
	2WD	2WD	4WD
Steering gear type	VB66K	PB48S	PB59K
Turns of steering wheel on the vehicle (Lock-to-lock)	5.8	3.7	3.4
Steering gear ratio	24.4 - 26.84	16.5	15

Steering wheel axial play mm (in)	0 (0)
Steering wheel play mm (in)	35 (1.38) or less

Inspection and Adjustment

STEERING COLUMN

Unit: mm (in)

	Dimension "L"
2WD model	895.0 - 898.6 (35.24 - 35.38)
4WD model	863.1 - 866.7 (33.98 - 34.12)

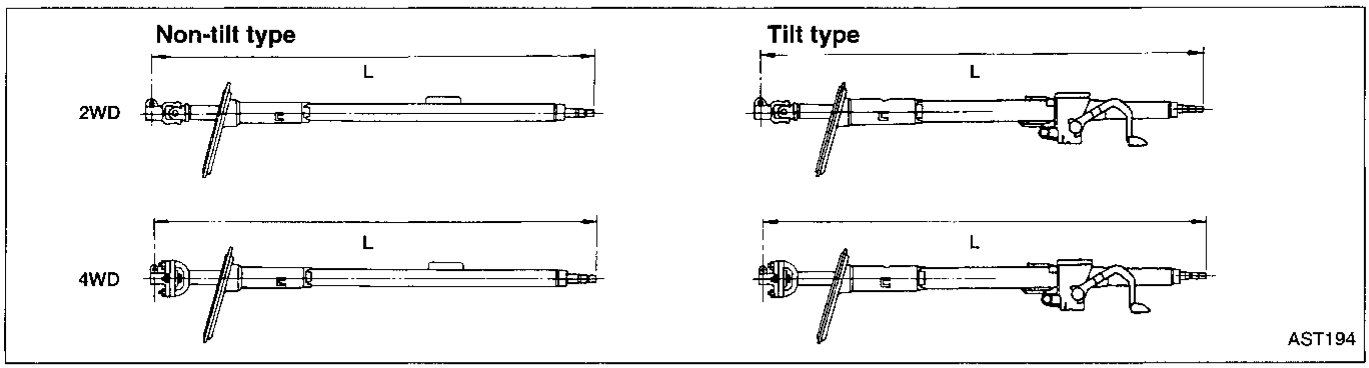

MANUAL STEERING GEAR (Model: VB66K)

Worm bearing preload N·m (kg-cm, in-lb)	0.69 - 0.88 (7.0 - 9.0, 6.1 - 7.8)	
Steering gear turning torque N·m (kg-cm, in-lb)		
360° position from straight-ahead position	0.69 - 0.88 (7.0 - 9.0, 6.1 - 7.8)	
Straight-ahead position (As compared with steering wheel turned 360°)	0.20 - 0.39 (2.0 - 4.0, 1.7 - 3.5)	
Maximum turning torque	1.08 (11.0, 9.5)	
Backlash at pitman arm top end (in a straight-ahead position) mm (in)	0 - 0.1 (0 - 0.004)	
End play (Between sector shaft and adjusting screw) mm (in)	0.1 (0.004) or less	
Adjusting shim thickness	Thickness mm (in)	Part number
	1.95 (0.0768)	48129-84500
	2.00 (0.0787)	48130-84500
	2.05 (0.0807)	48131-84500
Oil capacity ℓ (US pt, Imp pt)	Approx. 0.62 (1-3/8, 1-1/8)	

STEERING LINKAGE

Applied model	2WD	4WD
Relay-rod swivel joint		
Rotating torque N·m (kg-cm, in-lb)	—	0.5 - 4.9 (5 - 50, 4.3 - 43.4)
Axial end play mm (in)	—	0.1 - 1.0 (0.004 - 0.039)
Tie-rod & relay-rod ball joint		
Swinging force at cotter pin hole N (kg, lb)	10.8 - 107.9 (1.1 - 11.0, 2.4 - 24.3)	
Rotating torque N·m (kg-cm, in-lb)	0.5 - 4.9 (5 - 50, 4.3 - 43.4)	
Axial end play mm (in)	0.1 - 0.8 (0.004 - 0.031)	
Tie-rod standard engine (L) mm (in)	344 (13.54)	281 (11.06)

POWER STEERING SYSTEM (Model: PB48S)

Steering wheel turning force (at 360° from neutral position and circumference of steering wheel) N (kg, lb)	24.5 - 29.4 (2.5 - 3.0, 5.5 - 6.6)	
Oil pump pressure kPa (kg/cm², psi)	7,649 - 8,238 (78 - 84, 1,109 - 1,194) at idling	
Fluid capacity mℓ (US fl oz, Imp fl oz)	Approximately 900 - 1,000 (30.4 - 33.8, 31.7 - 35.2)	
Normal operating temperature °C (°F)	60 - 80 (140 - 176)	
Steering gear turning torque N·m (kg-cm, in-lb)		
360° position from straight-ahead position	0.7 - 1.2 (7 - 12, 6.1 - 10.4)	
Straight-ahead position (As compared with steering wheel turned 360°)	0.1 - 0.4 (1 - 4, 0.9 - 3.5) higher	
Backlash at pitman arm top end (in a straight-ahead position) mm (in)	0 - 0.1 (0 - 0.004)	
End play (Between sector shaft and adjusting screw) mm (in)	0.01 - 0.03 (0.0004 - 0.0012)	
Adjusting shim thickness	Thickness mm (in)	Part number
	1.575 - 1.600 (0.0620 - 0.0630)	48213-B0100
	1.550 - 1.575 (0.0610 - 0.0620)	48214-B0100
	1.525 - 1.550 (0.0600 - 0.0610)	48215-B0100
	1.500 - 1.525 (0.0591 - 0.0600)	48216-B0100
	1.475 - 1.500 (0.0581 - 0.0591)	48217-B0100
	1.450 - 1.475 (0.0571 - 0.0581)	48218-B0100

POWER STEERING SYSTEM (Model: PB59K)

Steering wheel turning force (at 360° from neutral position and circumference of steering wheel) N (kg, lb)	39 (4, 9) or less
Oil pump pressure kPa (kg/cm², psi)	7,649 - 8,238 (78 - 84, 1,109 - 1,194) at idling
Fluid capacity mℓ (US fl oz, Imp fl oz)	Approximately 1,000 - 1,100 (33.8 - 37.2, 35.2 - 38.7)
Normal operating temperature °C (°F)	60 - 80 (140 - 176)
Steering gear turning torque N·m (kg-cm, in-lb)	
360° position from straight-ahead position	0.15 - 0.78 (1.5 - 8.0, 1.3 - 6.9)
Straight-ahead position (As compared with steering wheel turned 360°)	0.25 - 1.32 (2.5 - 13.5, 2.2 - 11.7) higher
Maximum turning torque	1.03 - 1.47 (10.5 - 15, 9.1 - 13.0)
Backlash at pitman arm top end (in a straight-ahead position) mm (in)	0 - 0.1 (0 - 0.004)
End play (at sector shaft end in neutral position) mm (in)	0.1 (0.004) or less

SECTION RS

CONTENTS

PRECAUTIONS 2
Supplemental Restraint System (SRS) "AIR BAG" 2
SEAT BELTS 3
Front Seat Belt 4
Rear Seat Belt 5
SUPPLEMENTAL RESTRAINT SYSTEM (SRS) 6
Precautions for SRS "Air Bag" Service 6
Special Service Tools 6
Description 7
SRS Component Parts Location 8
Maintenance Items 8
Diagnosis Sensor Unit and Crash Zone Sensor 9
Removal And Installation 9
Air Bag Module and Spiral Cable 10
Removal 10
Installation 11
Disposal of Air Bag Module 13
Checking Deployment Tool 13
Deployment Procedures For Air Bag Module (Outside of Vehicle) 14
Deployment of Air Bag Module While Mounted In Vehicle 15
Disposing of Air Bag Module 15
TROUBLE DIAGNOSES — Supplemental Restraint System (SRS) 17
How to Perform Trouble Diagnoses for Quick and Accurate Repair 17
Schematic 19
Wiring Diagram –SRS– 20
Self-diagnosis 22
Diagnostic Procedures 22
Trouble Diagnoses for Air Bag Warning Lamp 35
Diagnostic Procedures 35
COLLISION DIAGNOSIS 37
SRS inspection 37

When you read wiring diagrams:
- **Read GI section, "HOW TO READ WIRING DIAGRAMS".**
- **See EL section, "POWER SUPPLY ROUTING" for power distribution circuit.**

When you perform trouble diagnoses, read GI section, "HOW TO FOLLOW FLOW CHART IN TROUBLE DIAGNOSES" and "HOW TO PERFORM EFFICIENT DIAGNOSIS FOR AN ELECTRICAL INCIDENT".

Supplemental Restraint System (SRS) "AIR BAG"

The Supplemental Restraint System "Air Bag", used along with a seat belt, helps to reduce the risk or severity of injury to the driver in a frontal collision. The Supplemental Restraint System consists of an air bag module (located in the center of the steering wheel), a diagnosis sensor unit, a crash zone sensor (4WD models), warning lamp, wiring harness and spiral cable.

WARNING:

- **To avoid rendering the SRS inoperative, which could increase the risk of personal injury or death in the event of a collision which would result in air bag inflation, all maintenance must be performed by an authorized NISSAN dealer.**
- **Improper maintenance, including incorrect removal and installation of the SRS, can lead to personal injury caused by unintentional activation of the system.**
- **Do not use electrical test equipment on any circuit related to the SRS unless instructed to in this Service Manual. SRS wiring harnesses are covered with yellow insulation either just before the harness connectors or for the complete harness, for easy identification.**

CAUTION:
- Do not disassemble buckle or seat belt assembly.
- Replace anchor bolts if they are deformed or worn out.
- Never oil tongue and buckle.
- If any component of seat belt assembly is questionable, do not repair. Replace the seat belt assembly.
- If webbing is cut, frayed, or damaged, replace seat belt assembly.
- When replacing seat belt assembly, use a genuine NISSAN seat belt assembly.
- After any collision, inspect all seat belt assemblies, including retractors and other attached hardware.

Front Seat Belt

SEC. 868

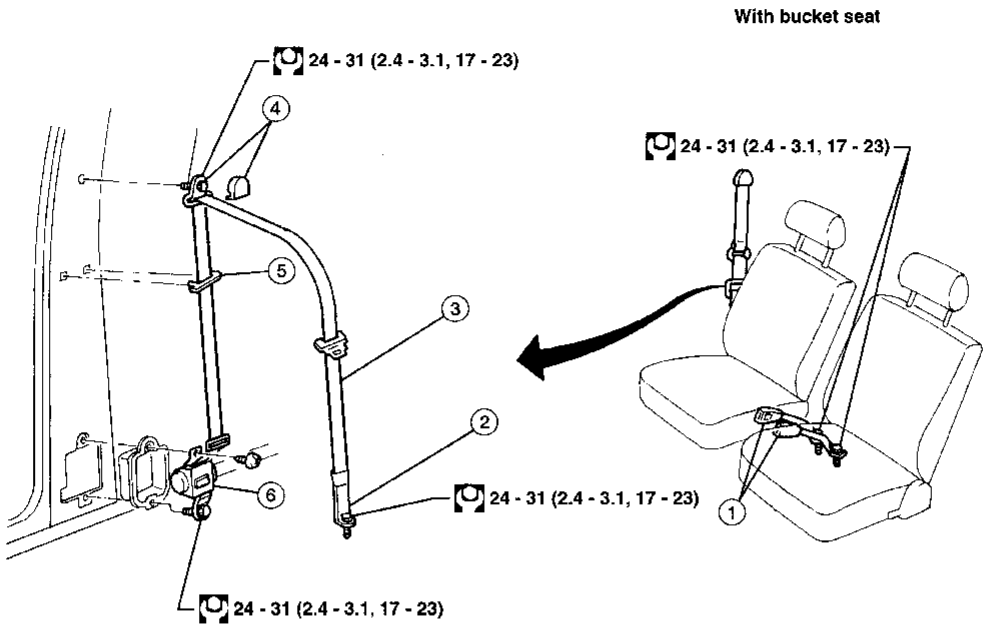

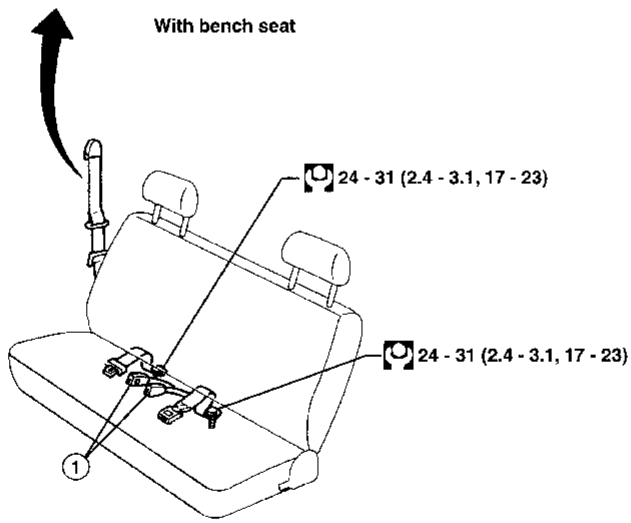

ARS126

: N·m (kg-m, ft-lb)

Removal

Remove front seat. Refer to BT section ("Front Seat", "SEAT").

① Remove buckle.
② Remove floor anchor bolt.
③ Remove lower side finisher.
④ Remove pillar anchor cover and anchor bolt.
⑤ Remove guide plate.
⑥ Remove retractor bolts and remove retractor.

Rear Seat Belt

SEC. 869

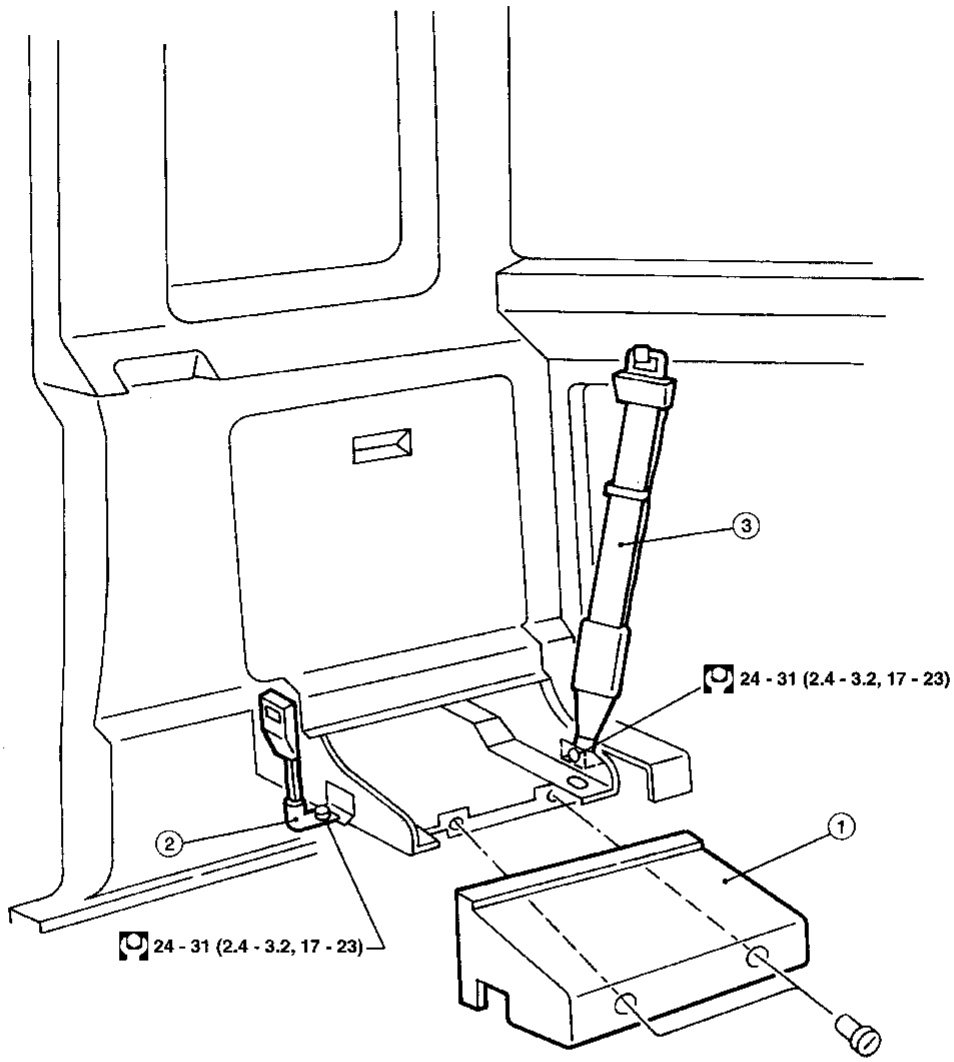

: N·m (kg-m, ft-lb)

ARS125

Removal

① Remove underseat storage.
② Remove buckle.
③ Remove seat belt anchor bolt.

Precautions for SRS "Air Bag" Service

- Do not use electrical test equipment on any circuit related to the SRS unless instructed to in this Service Manual. SRS wiring harnesses are covered with yellow insulation either just before the harness connectors or for the complete harness, for easy identification.
- Before servicing the SRS, turn ignition switch OFF, disconnect both battery cables and wait at least 3 minutes.
  For approximately 3 minutes after the cables are removed it is still possible for the air bag to deploy. Therefore, do not work on any air bag system connectors or wires until at least 3 minutes have passed.
- Diagnosis sensor unit and crash zone sensor (4WD models) must always be installed with arrow mark "⇧" pointing toward the front of the vehicle for proper operation. Also check diagnosis sensor unit for cracks, deformities and rust before installation and replace if necessary.
- The spiral cable must be aligned with the neutral position since its rotations are limited. Do not attempt to turn steering wheel or column after removal of steering gear.
- Handle air bag module carefully. Always place it with the pad side facing upward.
- Do not use old special bolts after removing any SRS parts; replace with new special bolts. Conduct self-diagnosis to check entire SRS for proper function.
- If front of vehicle is damaged in a collision, always check the crash zone sensor and the wiring harness (4WD models).

Special Service Tools

The actual shapes of Kent-Moore tools may differ from those of special serivce tools illustrated here.

Tool number (Kent-Moore No.) Tool name	Description	
KV991072S0 (J38381-KIT) Air bag deployment kit KV99106400 (J38381) Deployment tool	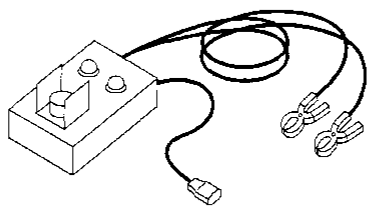 NT357	Disposing of air bag module
KV99105300 (J41246) Air bag module bracket	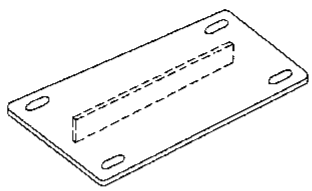 NT354	Anchor the air bag module
HT61961000 and HT62152000 combined (J38219) *Special torx bit	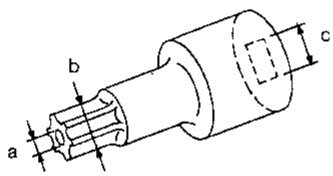 NT361	Use for special bolts [TAMPER RESISTANT TORX (Size T50)] **a: 3.5 (0.138) dia.** **b: 8.5 - 8.6 (0.335 - 0.339) dia.** **c: approx. 10 (0.39) sq.** Unit: mm (in)

*: Special tool or commercial equivalent

Description

2WD models

The diagnosis sensor unit will deploy the air bag if the G-sensor activates simultaneously with the safing sensor while the ignition switch is ON.

4WD models

The diagnosis sensor unit will deploy the air bag if the G-sensor and/or the crash zone sensor activates simultaneously with the safing sensor while the ignition switch is ON.

Ignition	Crash zone sensor (4WD models only)	Diagnosis sensor unit		Air bag signal
		G-sensor	Safing sensor	
ON		ON	ON	ON
ON	ON		ON	ON
ON	ON	ON	ON	ON

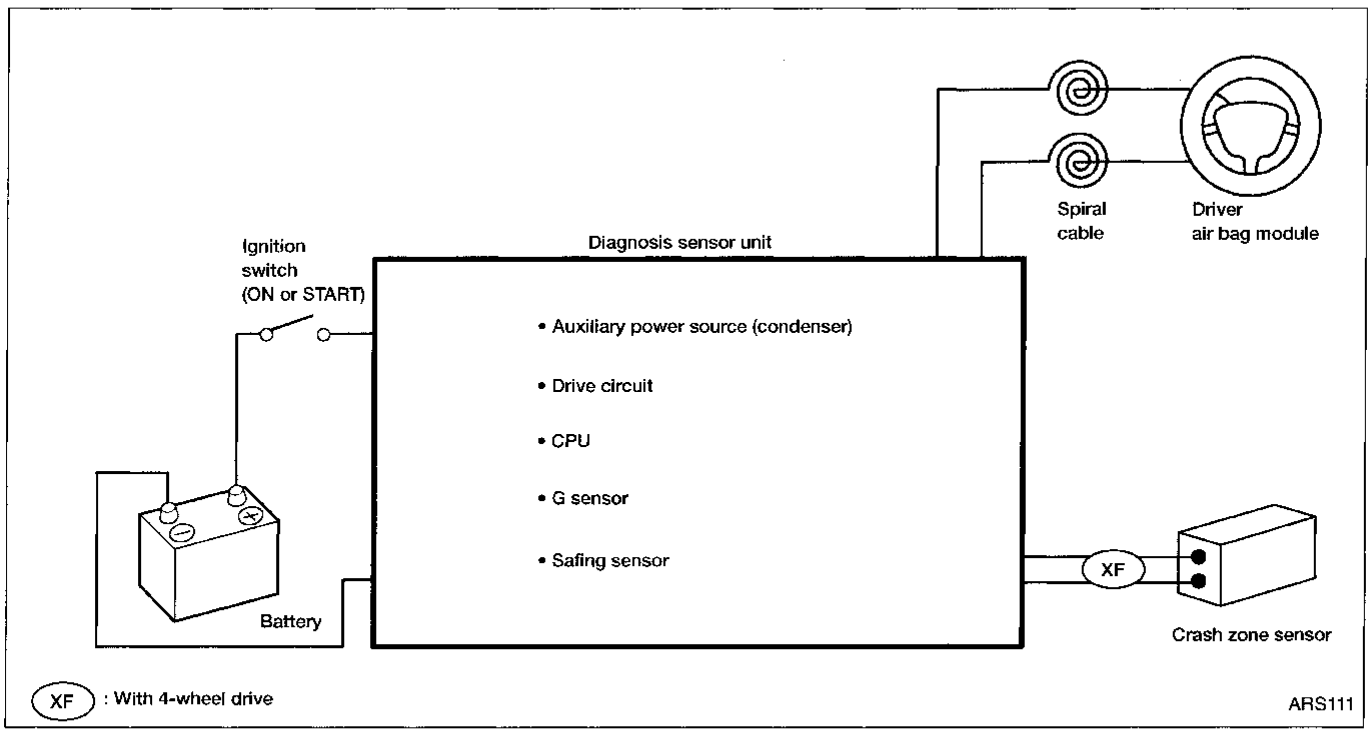

SRS Component Parts Location

SEC. 240•253•484•680

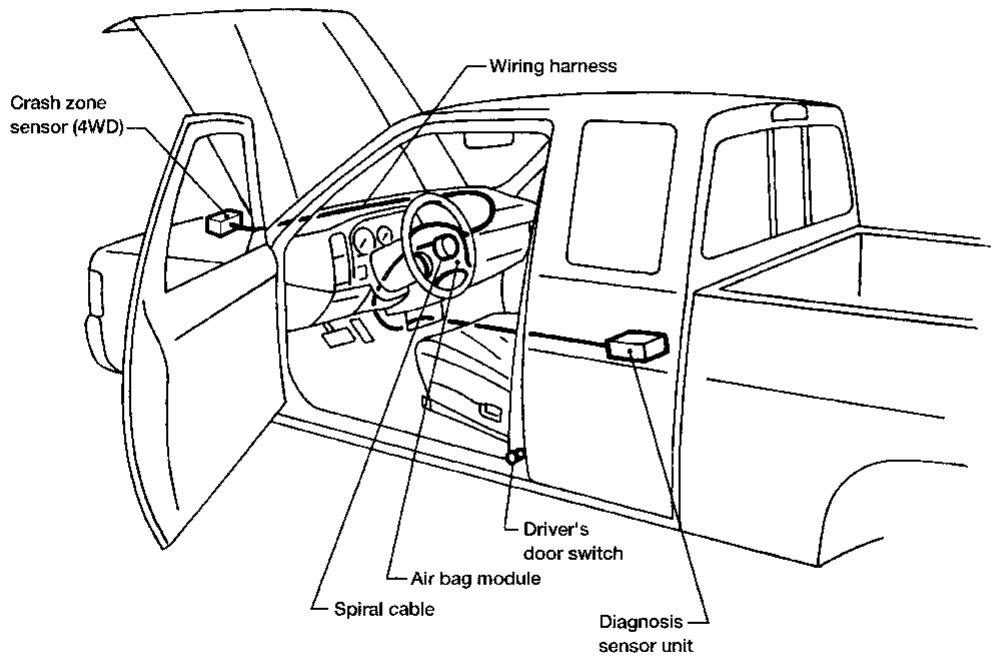

Maintenance Items

1. Check "AIR BAG" warning lamp operation
   After turning ignition key to the ON position, "AIR BAG" warning lamp illuminates. The "AIR BAG" warning lamp will turn off after about 7 seconds if no malfunction is detected.
   If any of the following "AIR BAG" warning lamp conditions occur, immediately check the air bag system. Refer to RS-22 for details.

- The warning lamp does not illuminate when the ignition switch is turned ON.
- The warning lamp does not turn off about 7 seconds after the ignition switch is turned ON.
- The warning lamp turns off about 7 seconds after the ignition switch is turned ON, but it turns on again or blinks.

2. Visually check SRS components

a. Crash zone sensor (4WD models).

- Check crash zone sensor to ensure the arrow marks face the front of the vehicle.
- Check body and sensor bracket for deformities and rust.
- Check sensor case for dents, cracks, deformities and rust.
- Check sensor harness for binding, connector for damage and terminals for deformities.

b. Diagnosis sensor unit

- Check diagnosis sensor unit and bracket for dents, cracks and deformities.
- Check connectors for damage and terminals for deformities.

c. Air bag module and steering wheel

- Remove air bag module from steering wheel. Check harness cover and connectors for damage, terminals for deformities and harness for binding.
- Install air bag module to steering wheel to check fit and alignment with the wheel.
- Check steering wheel for excessive free play.

d. Spiral cable

- Check spiral cable and combination switch for damage.
- Check connectors and protective tape for damage.
- Check steering wheel for noise, binding and heavy operation.

e. Main harness and air bag harness

- Check connectors for poor connections and damage and terminals for deformities.
- Check harnesses for binding, chafing and cuts.

CAUTION:
Replace previously used special bolts with new ones.

Diagnosis Sensor Unit and Crash Zone Sensor

CAUTION:

- **Before servicing SRS, turn the ignition switch OFF, disconnect both battery cables and wait for at least 3 minutes.**
- **The special bolts are coated with a bonding agent while the other bolt is for ground. Do not use old bolts after removal; replace with new coated bolts.**
- **Check diagnosis sensor unit for proper installation.**
- **Check diagnosis sensor unit to ensure that there are no deformities, dents, cracks or rust. If there are any visible signs of damage, replace with a new one.**
- **Check diagnosis sensor unit brackets to ensure they are free of deformities and rust.**
- **Replace diagnosis sensor unit if it has been dropped or sustained an impact.**
- **Check crash zone sensor for proper installation.**
- **Check crash zone sensor to ensure that there are no deformities, dents, cracks or rust. If there are any visible signs of damage, replace the crash zone sensor.**
- **Check crash zone sensor bracket to ensure that it is free of deformities and rust.**

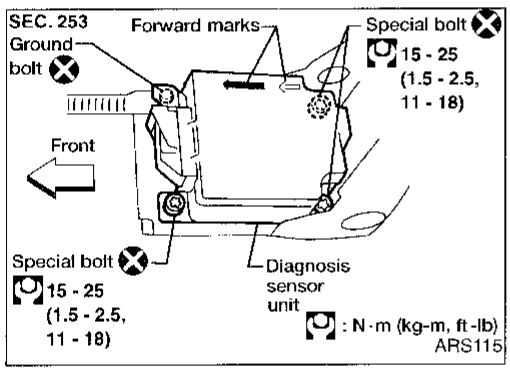

REMOVAL AND INSTALLATION

CAUTION:

Before servicing SRS, turn the ignition switch OFF, disconnect both battery cables and wait at least 3 minutes.

Diagnosis sensor unit

1. Disconnect driver air bag module connector.
2. Remove console box. Refer to BT section ("INSTRUMENT PANEL").
3. Disconnect diagnosis sensor unit connector.
4. Using the TAMPER RESISTANT TORX (Size T50), remove the three special bolts, then remove ground bolt. The diagnosis sensor unit can then be removed.

NOTE:

To install, reverse the removal procedure.

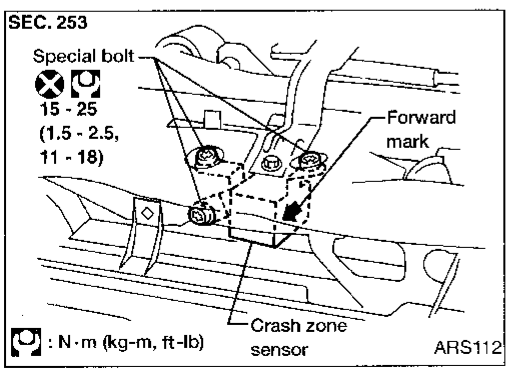

Crash zone sensor (4WD models)

1. Disconnect driver air bag module connector.
2. Disconnect crash zone sensor connector.
3. Using the TAMPER RESISTANT TORX (Size T50), remove the three special bolts. The crash zone sensor can then be removed.

NOTE:

To install, reverse the removal procedure.

Air Bag Module and Spiral Cable

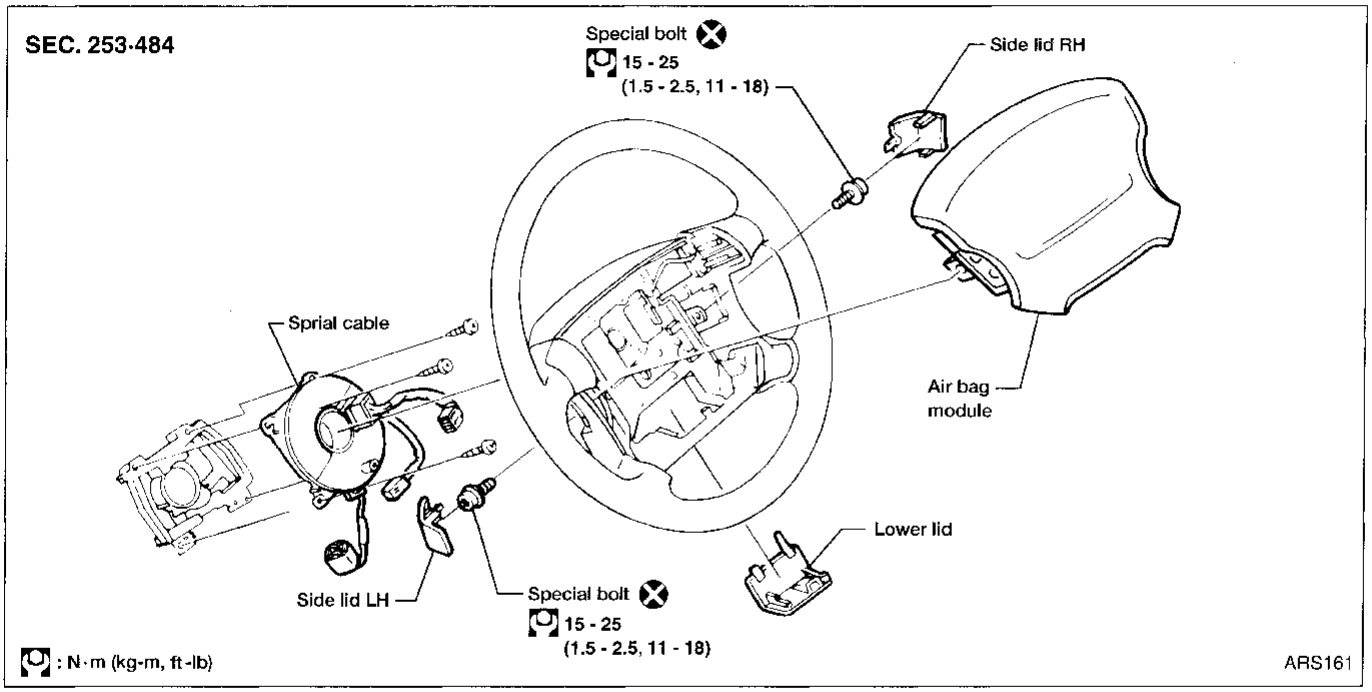

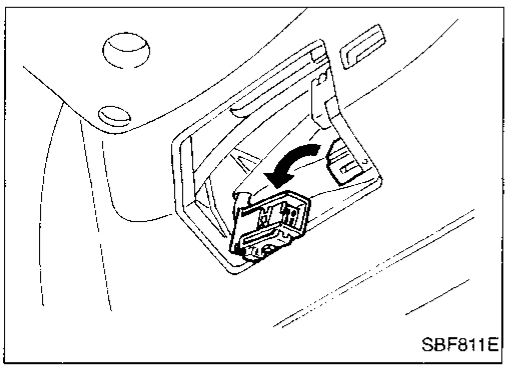

REMOVAL

CAUTION:

- **Before servicing SRS, turn the ignition switch OFF, disconnect both battery cables and wait for at least 3 minutes.**
- **Always work from the side of air bag module.**

1. Remove lower lid from steering wheel, and disconnect air bag module connector.

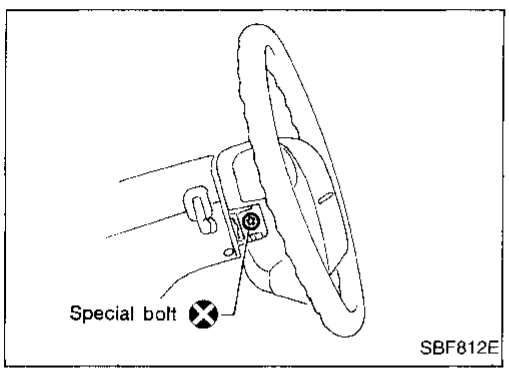

2. Remove LH and RH side lids and ASCD steering switch (if so equipped). Using the TAMPER RESISTANT TORX (Size T50), remove left and right special bolts. The air bag module can then be removed.

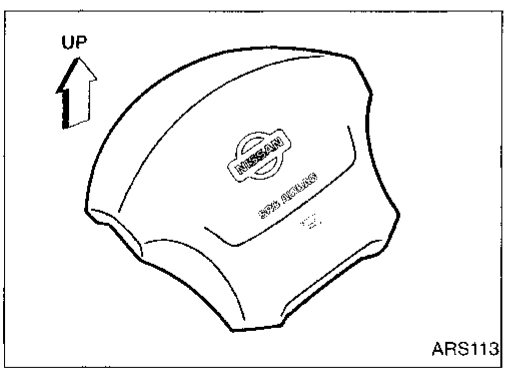

CAUTION:

- **Always place air bag module with pad side facing upward.**
- **Do not attempt to disassemble air bag module.**
- **The special bolts are coated with a bonding agent. Do not use old bolts after removal; replace with new coated bolts.**

Air Bag Module and Spiral Cable (Cont'd)

SBF814E

- **Do not drop or impact air bag module. Replace air bag module if it has been dropped or sustained an impact.**
- **Do not expose the air bag module to temperatures exceeding 90°C (194°F).**
- **Do not allow oil, grease or water to contact the air bag module.**

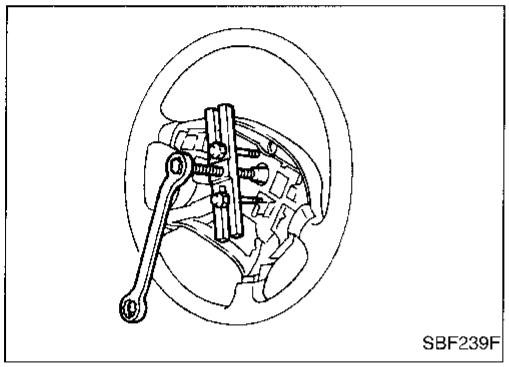
SBF239F

3. Set steering wheel in the neutral position.
4. Disconnect horn connector and remove steering wheel nut.
5. Remove steering wheel mass damper.
6. Using steering wheel puller, remove steering wheel. Be careful not to overtighten puller bolt on steering wheel.

CAUTION:
Do not tap or bump the steering wheel.

7. Remove steering column cover.
8. Disconnect air bag harness and main harness connectors.

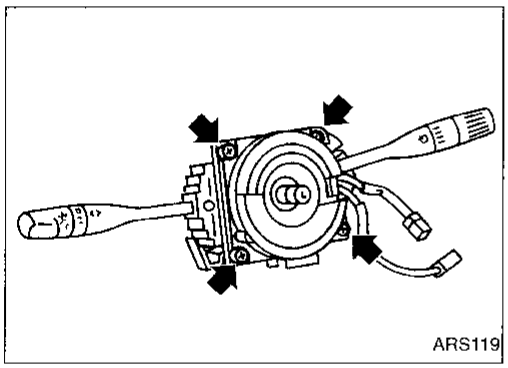
ARS119

9. Remove the four spiral cable retaining screws. The spiral cable can then be removed.

CAUTION:
- **Do not attempt to disassemble spiral cable.**
- **Do not apply lubricant to the spiral cable.**

INSTALLATION

1. Set the front wheels in the straight-ahead position.
2. Align the turn signal cancel tab with the notch of the combination switch as shown.

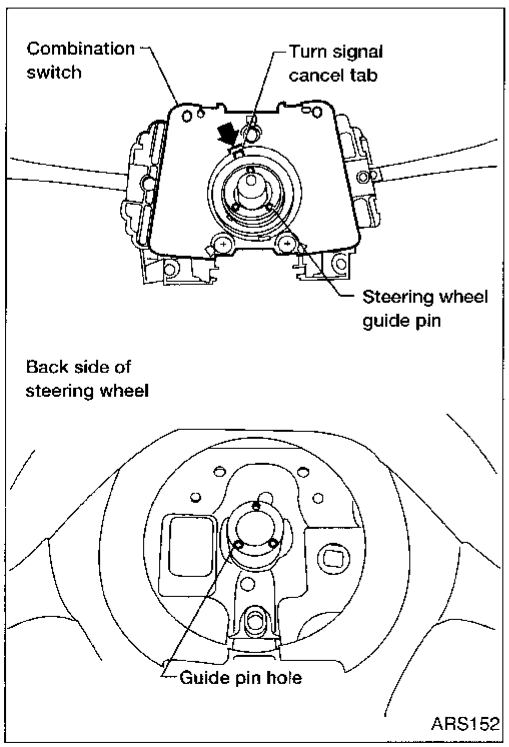

ARS152

Air Bag Module and Spiral Cable (Cont'd)

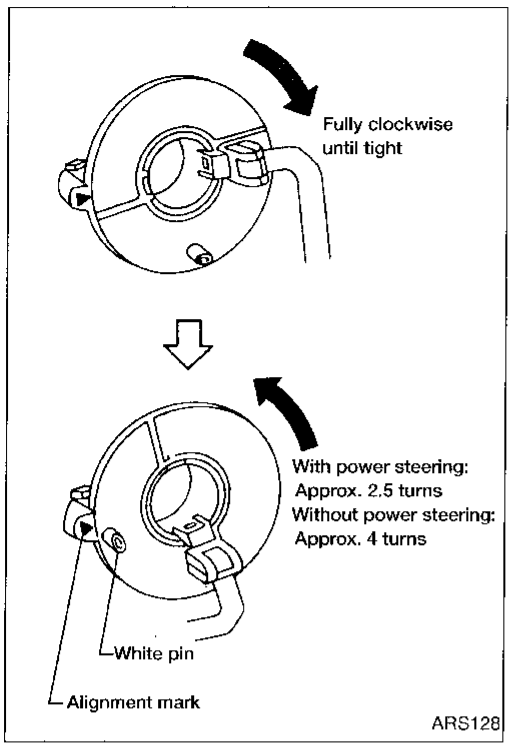

3. Rotate the spiral cable fully clockwise until tight.
4. Rotate spiral cable counterclockwise as specified below. Align the white pin with the alignment mark.

Specified turns for spiral cable:

Applied model	Specified turns from neutral position
With power steering	Approx. 2.5
Without power steering	Approx. 4

CAUTION:
The spiral cable may snap during steering operation if the cable is installed improperly. Also, with the steering linkage disconnected, the cable may snap by turning the steering wheel beyond the specified number of turns. Always perform SRS self-diagnosis after installing the air bag module.

5. Connect spiral cable air bag harness and main harness connectors and tighten screws. Install steering column cover.

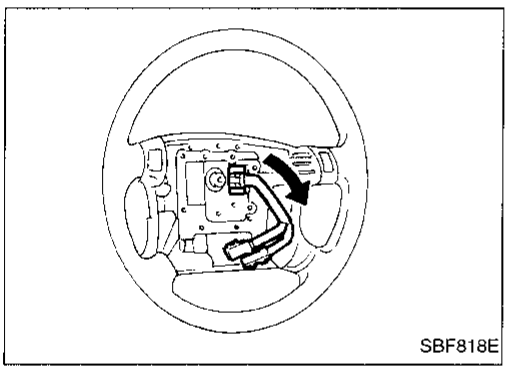

6. Install mass damper on steering wheel.
7. Install steering wheel, setting spiral cable pin guide, and pulling spiral cable harness through.
8. Connect horn connector.
9. Tighten steering wheel nut.
   [O]: 29 - 39 N·m (3.0 - 4.0 kg-m, 22 - 29 ft-lb)

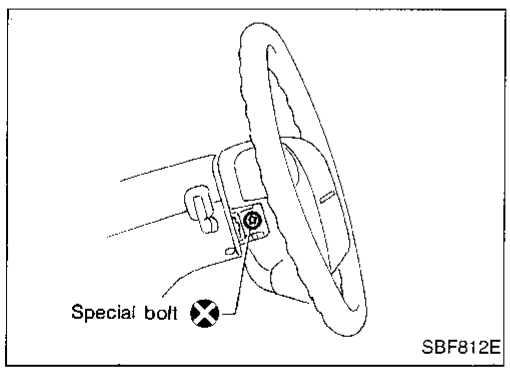

10. Position air bag module and tighten with new special bolts.
11. Connect air bag module connector.
12. Install ASCD switch and tighten screws.
13. Install all lids.
14. Connect both battery cables.
15. Conduct Self-diagnosis to ensure entire SRS operates properly (Use CONSULT or warning lamp check). Turn steering wheel to the left end and then to the right end fully to make sure that the spiral cable is set in the neutral position.
16. If "AIR BAG" warning lamp blinks (in User mode), it shows that the spiral cable may be snapped due to its improper position. Perform Self-diagnosis again (Use CONSULT or warning lamp check). If a malfunction is detected, replace the spiral cable with a new one.

Disposal of Air Bag Module

- Make sure to deactivate air bag modules before disposing of them. Also, before disposing of a vehicle equipped with an air bag system, deactivate air bag modules. If such a system has already been deployed due to an accident, dispose of as indicated in "DISPOSING OF AIR BAG MODULE", RS-15.
- Do not dispose of the air bag module undeployed.
- When deploying the air bag module, always use the Special Service Tool; Deployment tool (Kent-Moore No. J38381).
- When deploying the air bag module, stand to the side of the module at least 5 m (16 ft) away.
- Due to heat, do not touch air bag module for at least 30 minutes after deployment.
- Be sure to wear gloves when handling a deployed air bag module.
- Never apply water to a deployed air bag module.
- Wash your hands after finishing work.

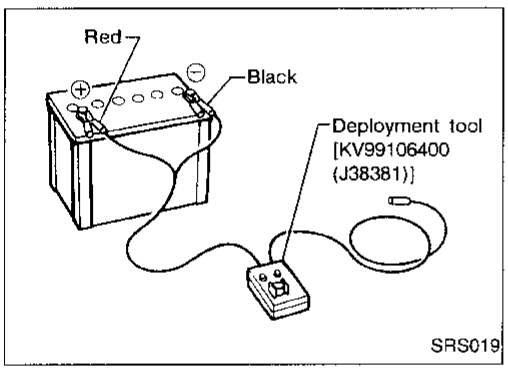

CHECKING DEPLOYMENT TOOL

Connecting to battery

- Place vehicle outdoors with at least 6 m (20 ft) of open space on all sides.
- Use a voltmeter to make sure the vehicle battery is fully charged.

CAUTION:
The battery must show voltage of 9.6V or more.

Remove the battery from the vehicle and place it on dry wood blocks approximately 5 m (16 ft) away from the vehicle.

- Wait 3 minutes after the vehicle battery is disconnected before proceeding.
- Connect red clip of deployment tool to battery positive terminal and black clip to negative terminal.

CAUTION:
Make sure the polarity is correct. The right side lamp in the tool, marked "deployment tool power", should glow with a green light. If the right side lamp glows red, reverse the connections to the battery.

Deployment tool check

Press the deployment tool switch to the ON position. The left side lamp in the tool, marked "air bag connector voltage" should illuminate. If it does not illuminate, replace the tool.

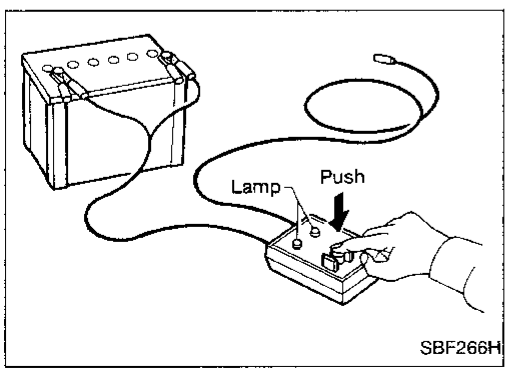

Air bag deployment tool lamp illumination chart (Battery connected)

Switch operation	Left side lamp, green* "AIR BAG CONNECTOR VOLTAGE"	Right side lamp, green* "DEPLOYMENT TOOL POWER"
OFF	OFF	ON
ON	ON	ON

*: If this lamp glows red, the tool is connected to the battery incorrectly. Reverse the connections and make sure the lamp glows green.

Disposal of Air Bag Module (Cont'd)

DEPLOYMENT PROCEDURES FOR AIR BAG MODULE (OUTSIDE OF VEHICLE)

Deploying air bag module while it is mounted in vehicle may damage vehicle. Deploy air bag module as a unit except when disposing of vehicle.
Anchor air bag module in a vise secured to a firm foundation during deployment.

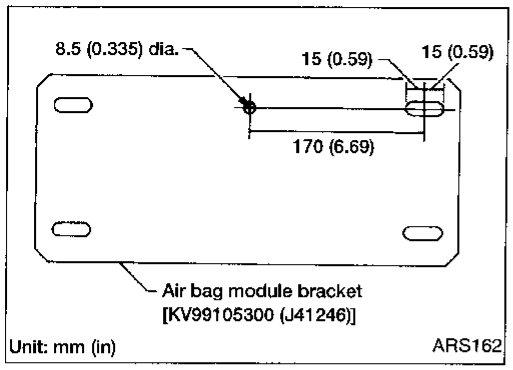

Deployment of air bag module (outside of vehicle)

1. Make an 8.5 mm (0.335 in) diameter hole in air bag module bracket (SST: J41246) at the position shown in figure at left.
2. Using wire, secure air bag module to air bag module bracket (SST: J41246) in two places as shown.

CAUTION:
Use wire of at least 1 mm (0.04 in) diameter.

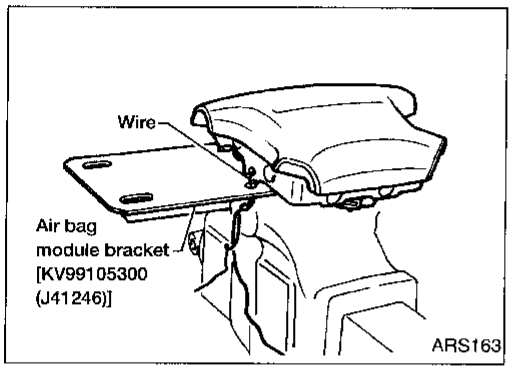

3. Firmly secure air bag module bracket (SST: J41246) (with air bag module attached) in the vise.

Make sure vise is firmly secured and will not pivot.

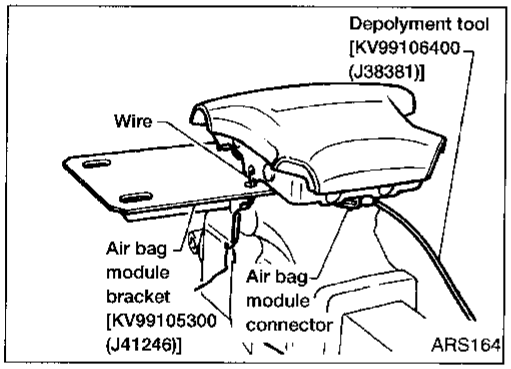

4. Connect deployment tool (SST: J38381) to air bag module connector.

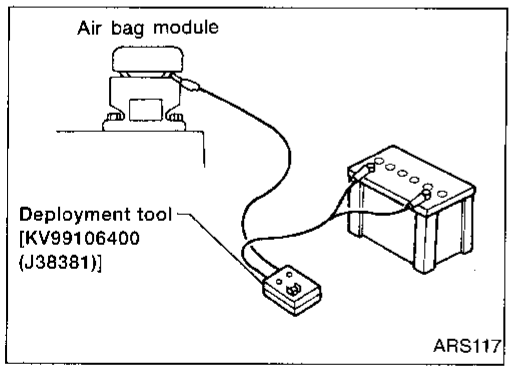

5. Connect red clip of deployment tool to battery positive terminal and black clip to negative terminal.
6. The lamp on the right side of the tool, marked "deployment tool power", should glow green, not red.
7. Press the button on the deployment tool. The left side lamp on the tool, marked "air bag connector voltage", will illuminate and the air bag module will deploy.

CAUTION:
When deploying the air bag module, stand to the side of the module at least 5 m (16 ft) away.

Disposal of Air Bag Module (Cont'd)

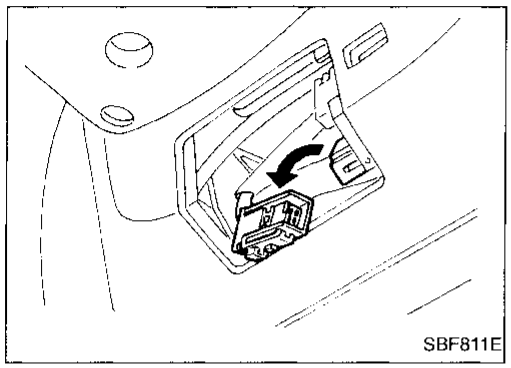
SBF811E

DEPLOYMENT OF AIR BAG MODULE WHILE MOUNTED IN VEHICLE

When disposing of a vehicle, deploy air bag module while it is mounted in vehicle.

CAUTION:

When deploying air bag module, ensure vehicle is empty.

1. Turn ignition switch OFF, disconnect both battery cables and wait at least 3 minutes.
2. Disconnect air bag module connector.
3. Connect deployment tool (SST: J38381) connector to air bag module.
4. Connect red clip of deployment tool to battery positive terminal and black clip to negative terminal.
5. The lamp on the right side of the tool, marked "deployment tool power", should glow green, not red.
6. Press the button on the deployment tool. The left side lamp on the tool, marked "air bag connector voltage", will illuminate and the air bag module will deploy.

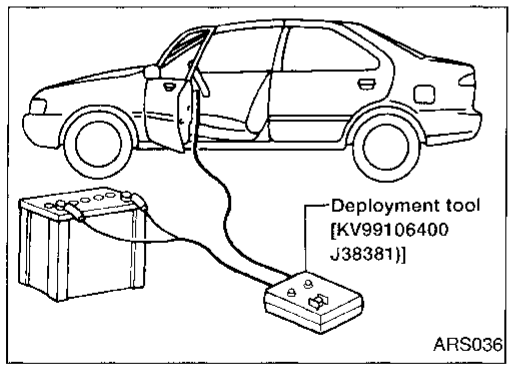

ARS036

DISPOSING OF AIR BAG MODULE

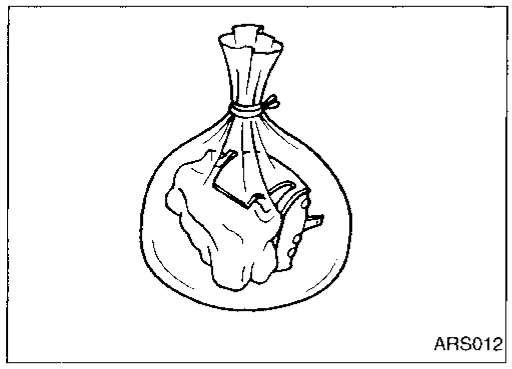
ARS012

Deployed air bag module is very hot. Before disposing of air bag modules, wait at least 30 minutes. Seal them in a plastic bag before disposal.

CAUTION:

- **Never apply water to a deployed air bag module.**
- **Be sure to wear gloves when handling a deployed air bag module.**
- **No poisonous gas is produced upon air bag module deployment. However, be careful not to inhale gas since it irritates throat and can cause choking.**
- **Do not attempt to disassemble air bag module.**
- **Air bag module cannot be reused.**
- **Wash your hands after finishing work.**

NOTES

How to Perform Trouble Diagnoses for Quick and Accurate Repair

A good understanding of the malfunction conditions can make troubleshooting faster and more accurate. In general, each customer feels differently about a problem. It is important to fully understand the symptoms or conditions for a customer complaint.

INFORMATION FROM CUSTOMER

WHAT ..... Vehicle model
WHEN ..... Date, Frequencies
WHERE ..... Road conditions
HOW ..... Operating conditions, Symptoms

PRELIMINARY CHECK

Check that the following parts are in good order.
- Battery [Refer to EL section ("BATTERY").]
- Fuse [Refer to EL section ("Fuse", "POWER SUPPLY ROUTING").]
- System component-to-harness connections

DIAGNOSIS FUNCTION

The SRS self-diagnosis results can be read by using "AIR BAG" warning lamp and/or CONSULT. The reading of these results is accomplished using one of two modes — "User mode" and "Diagnosis mode".
The User mode is exclusively prepared for the customer (driver). This mode warns the driver of a system malfunction through the operation of the "AIR BAG" warning lamp.
The Diagnosis mode allows the technician to locate and inspect the malfunctioning part.
The mode applications for the "AIR BAG" warning lamp and CONSULT are as follows:

	User mode	Diagnosis mode	Display type
"AIR BAG" warning lamp	X	X	ON-OFF operation
CONSULT	—	X	Monitoring

DIAGNOSIS MODE FOR CONSULT

- SELF-DIAG [CURRENT]
  A current Self-diagnosis result (also indicated by the number of warning lamp flashes in the Diagnosis mode) is displayed on the CONSULT screen in real time. This refers to a malfunctioning part requiring repairs.
- SELF-DIAG [PAST]
  Diagnosis results previously stored in the memory (also indicated by the warning lamp flashes in the Diagnosis mode) are displayed on the CONSULT screen. The stored results are not erased until memory erasing is executed.
- TROUBLE DIAG RECORD
  With TROUBLE DIAG RECORD, diagnosis results previously erased by a reset operation can be displayed on the CONSULT screen.

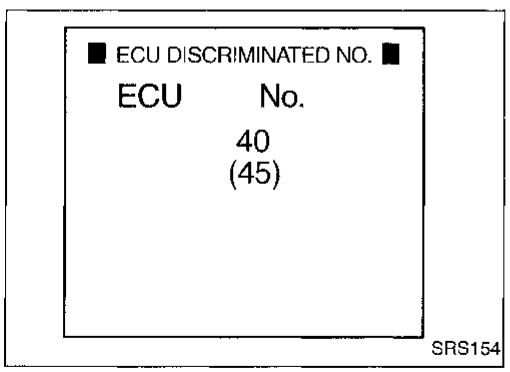

- ECU DISCRIMINATED NO.
  The diagnosis sensor unit for each vehicle model is assigned with its own individual classification number. This number will be displayed on the CONSULT screen, as shown at left. When replacing the diagnosis sensor unit, refer to the part number for the compatibility. After installation, replacement with a correct unit can be checked by confirming this classification number on the CONSULT screen.
  For NISSAN MODEL D21, the diagnosis sensor unit classification numbers assigned are as follows:
  2WD models: 40
  4WD models: 45

How to Perform Trouble Diagnoses for Quick and Accurate Repair (Cont'd)

CAUTION:

- **Do not use electrical test equipment on any circuit related to the SRS unless instructed to in this Service Manual. SRS wiring harnesses are covered with yellow insulation either just before the harness connectors or for the complete harness, for easy identification.**
- **Do not attempt to repair, splice or modify the SRS wiring harness. If the harness is damaged, replace it with a new one.**
- **Keep ground portion clean.**

WORK FLOW

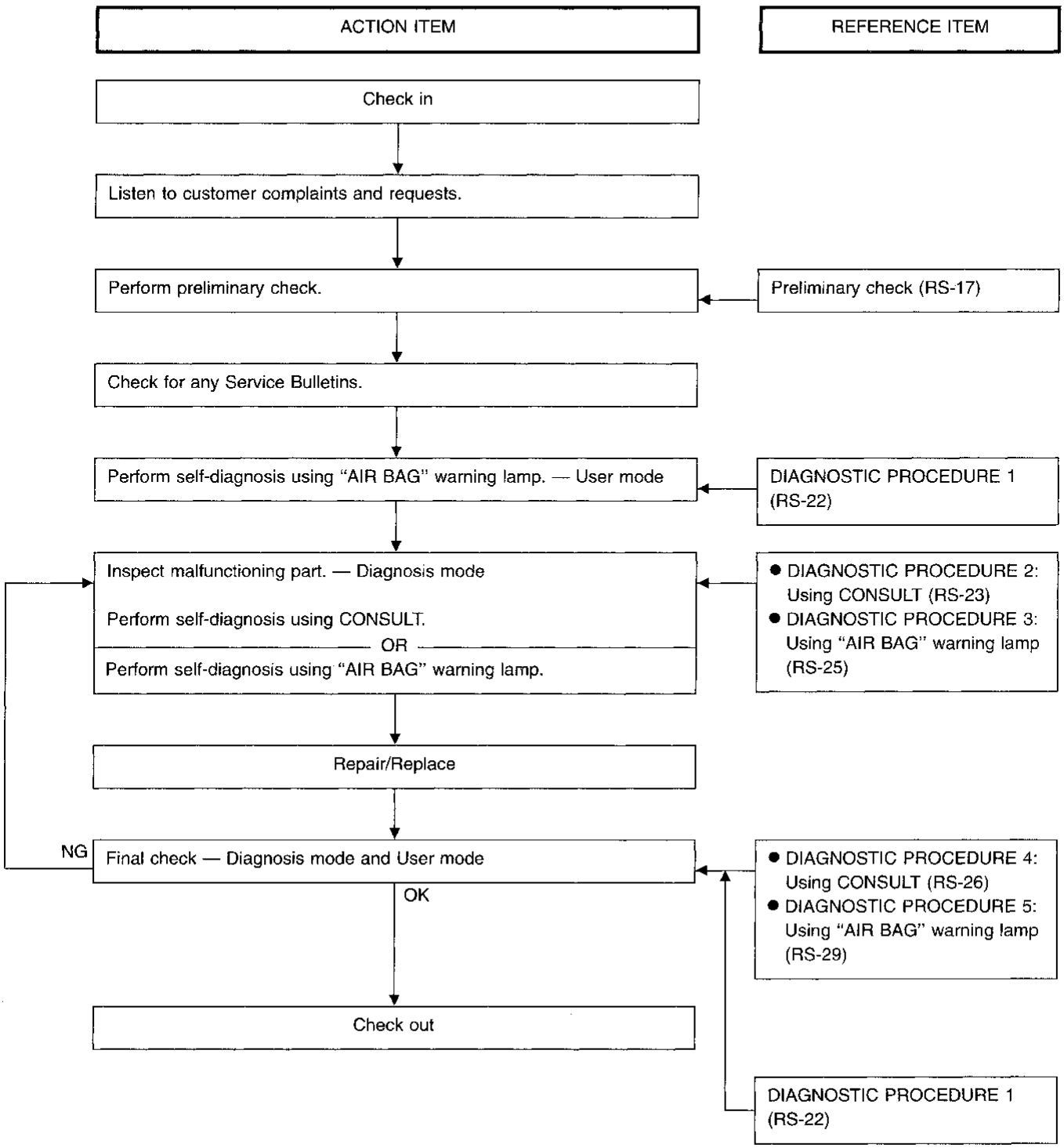

Schematic

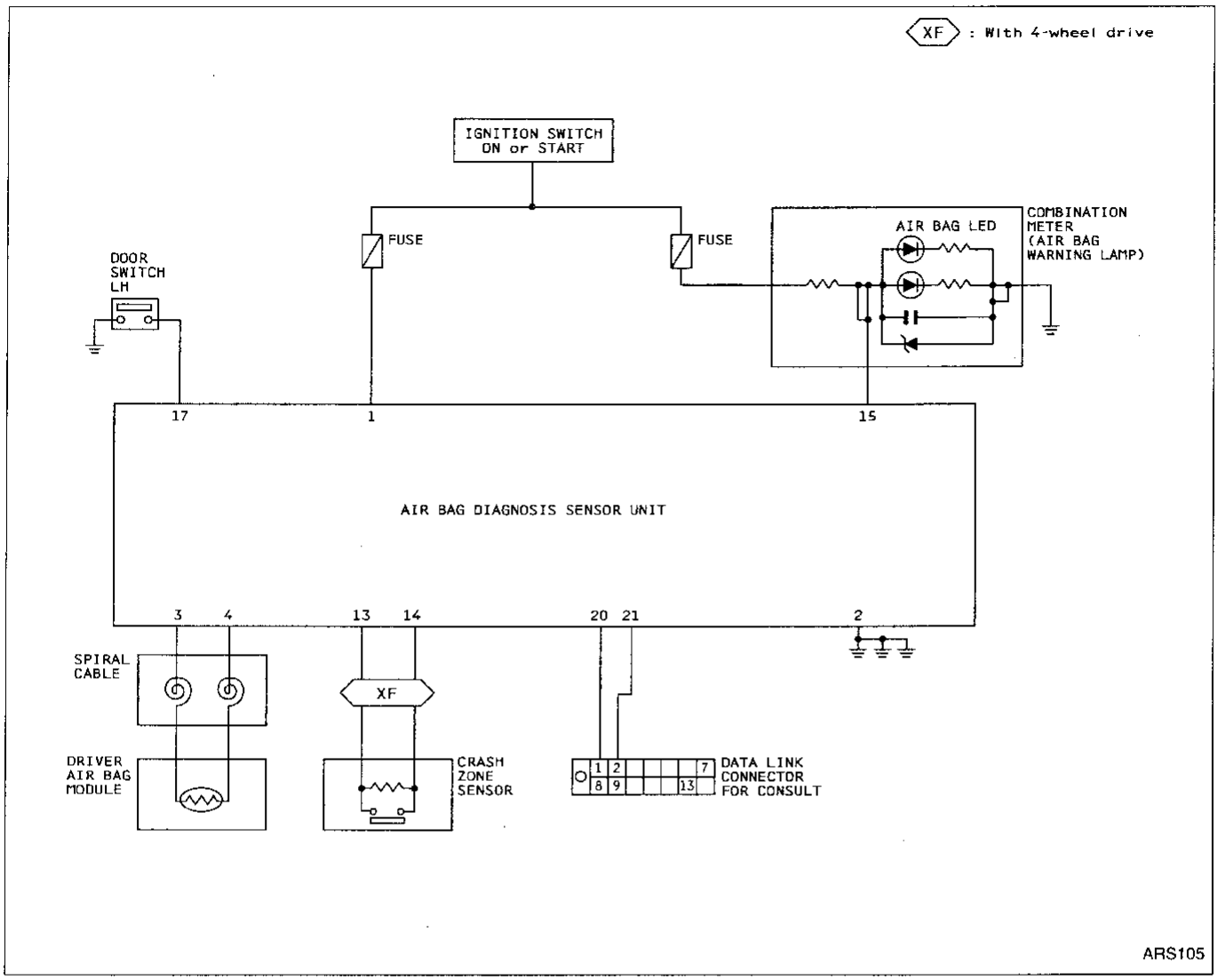
XF : With 4-wheel drive
IGNITION SWITCH ON or START
FUSE
FUSE
DOOR SWITCH LH
AIR BAG LED
COMBINATION METER (AIR BAG WARNING LAMP)
17
1
15
AIR BAG DIAGNOSIS SENSOR UNIT
3
4
13
14
20
21
2
SPIRAL CABLE
XF
DRIVER AIR BAG MODULE
CRASH ZONE SENSOR
1
2
7
8
9
13
DATA LINK CONNECTOR FOR CONSULT
ARS105

Wiring Diagram –SRS–

RS-SRS-01

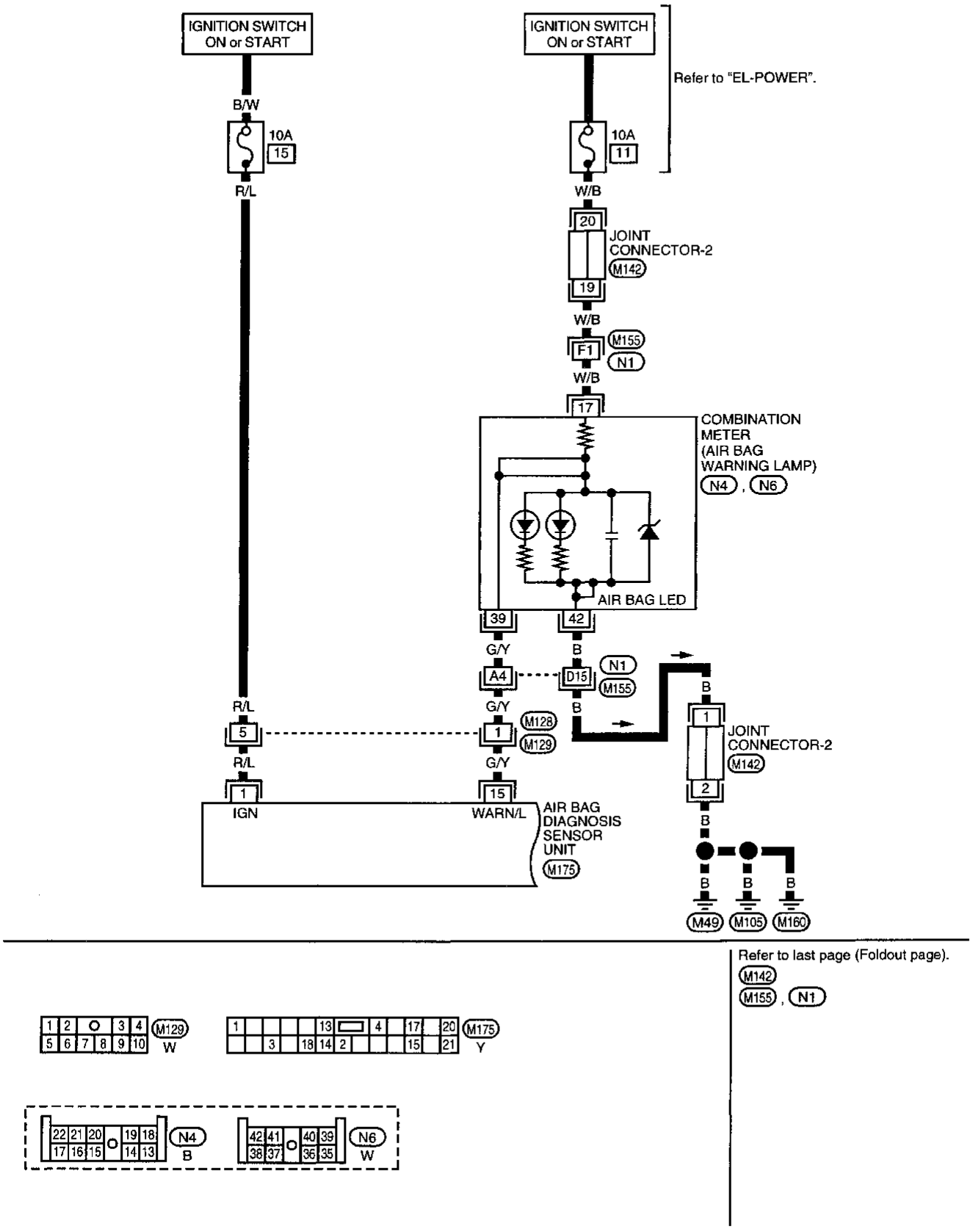

ARS106-A

Wiring Diagram –SRS– (Cont'd)

RS-SRS-02

XF : With 4-wheel drive

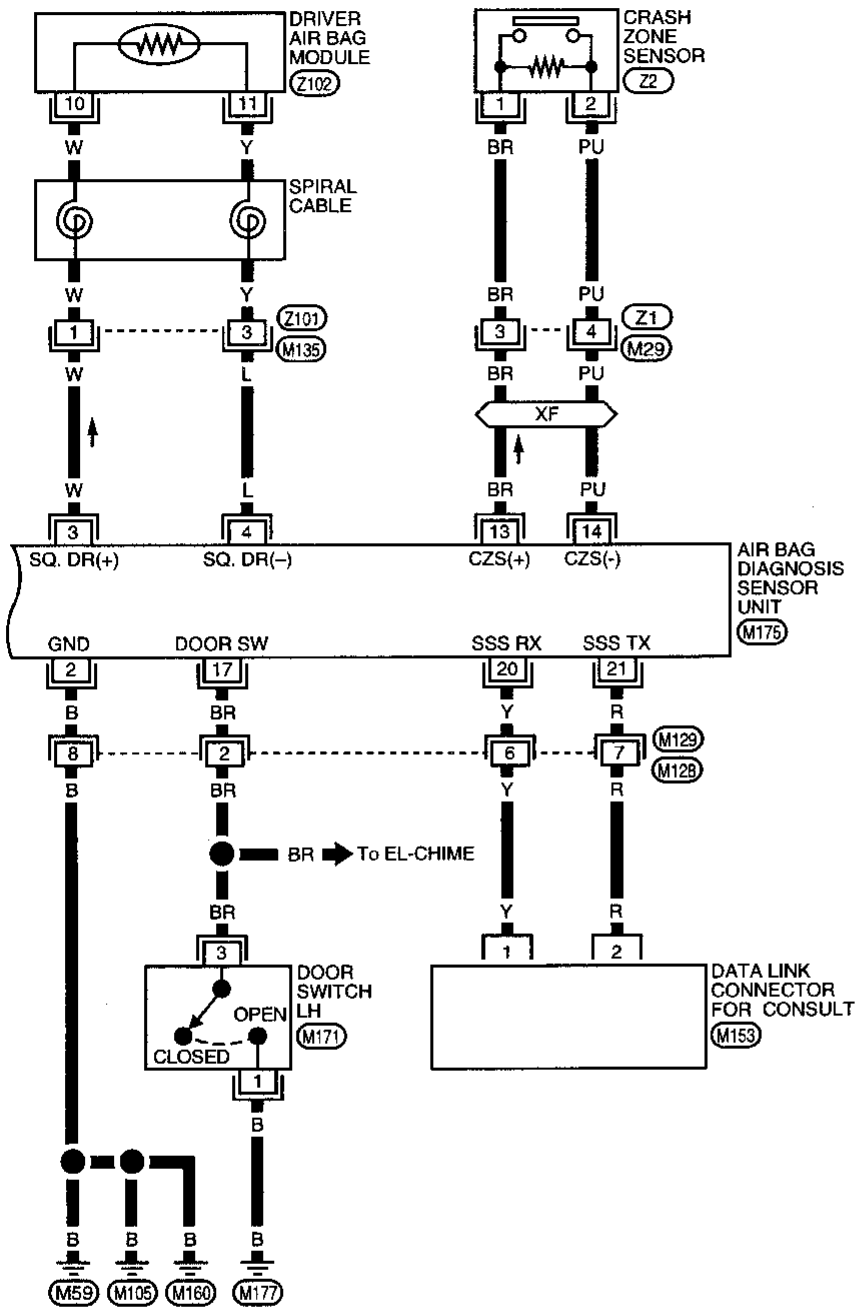

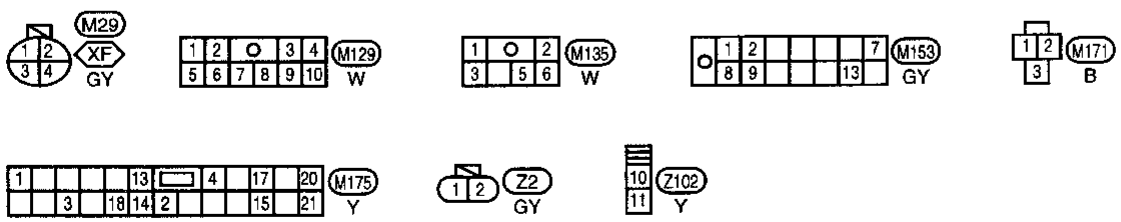

ARS106-B

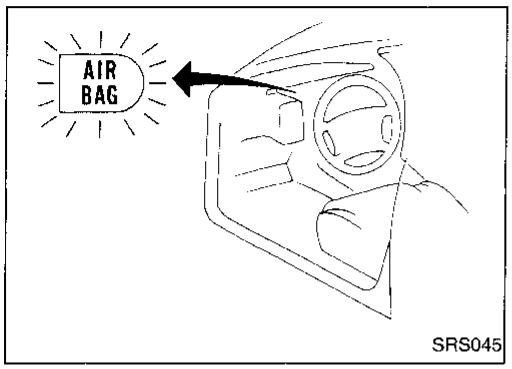

Self-diagnosis

DIAGNOSTIC PROCEDURE 1

Checking SRS operation by using "AIR BAG" warning lamp — User mode

1. After turning ignition switch from OFF to ON, "AIR BAG" warning lamp operates.
2. Compare "AIR BAG" warning lamp operation to the chart below.

"AIR BAG" warning lamp operation — User mode —	SRS condition	Reference item
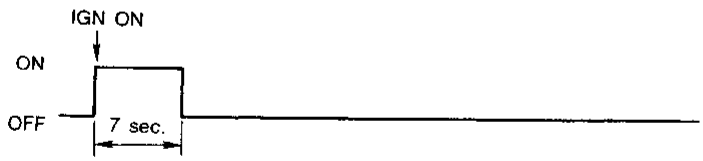	No malfunction is detected. No further action is necessary.	—
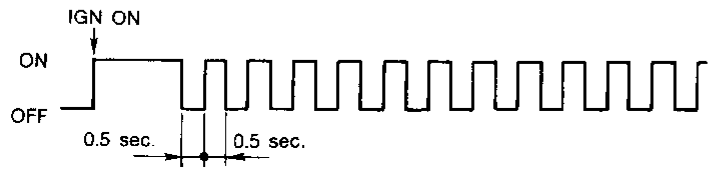	The system has a problem and needs to be repaired as indicated.	Go to DIAGNOSTIC PROCEDURE 2 or 3, RS-23 or 25.
	Air bag is deployed.	Go to COLLISION DIAGNOSIS, RS-38.
	Air bag fuse, diagnosis sensor unit or harness is malfunctioning and needs to be repaired.	Go to DIAGNOSTIC PROCEDURE 8, RS-36.
	One of the following has occurred and needs to be repaired: ● Meter fuse is open ● "AIR BAG" warning lamp circuit is shorted or open ● Diagnosis sensor unit is malfunctioning	Go to DIAGNOSTIC PROCEDURE 9, RS-36.

NOTE:
If "AIR BAG" warning lamp operates differently from the operations shown above, refer to "AIR BAG" warning lamp operation — Diagnosis mode —, DIAGNOSTIC PROCEDURE 3 (step 4), RS-25.

Self-diagnosis (Cont'd)

DIAGNOSTIC PROCEDURE 2 (with CONSULT)

Inspecting SRS malfunctioning parts by using CONSULT — Diagnosis mode

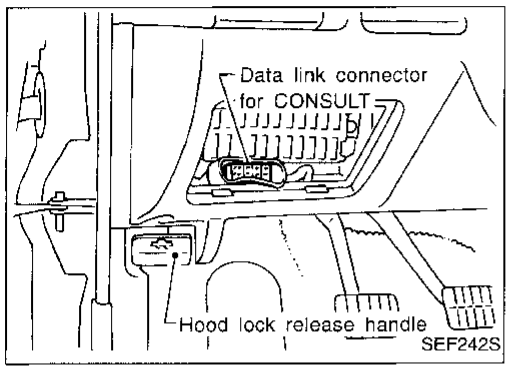

1. Turn ignition switch OFF.
2. Connect CONSULT to data link connector.

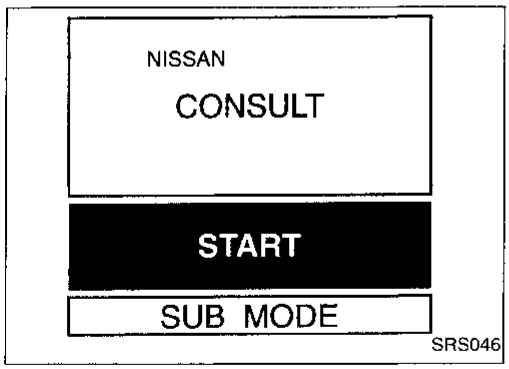

3. Turn ignition switch ON.
4. Touch START.

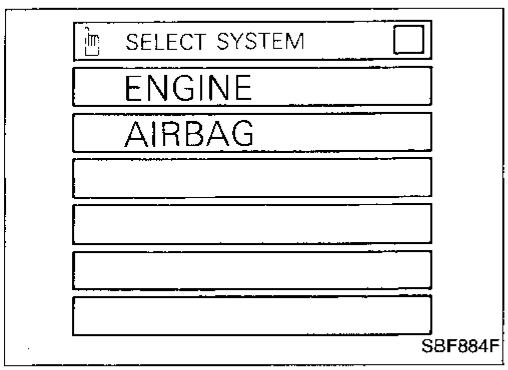

5. Touch AIRBAG.

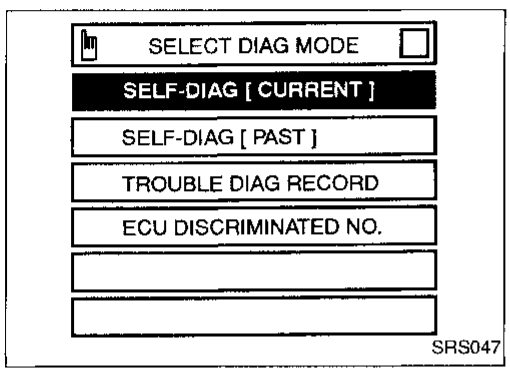

6. Touch SELF-DIAG [CURRENT].

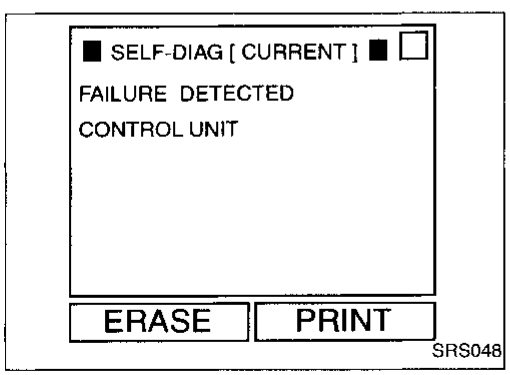

7. Diagnostic codes are displayed on SELF-DIAG [CURRENT].

Self-diagnosis (Cont'd)

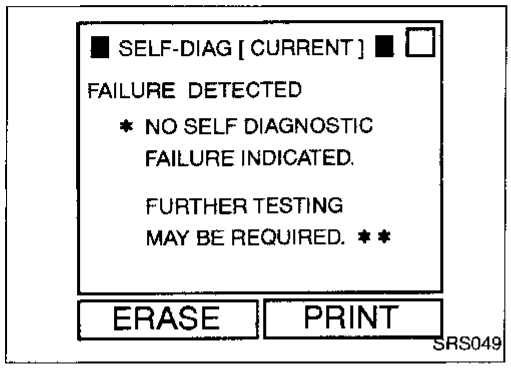

- **If no self-diagnostic failure is detected on SELF-DIAG [CURRENT] even though a malfunction is detected in DIAGNOSTIC PROCEDURE 1, go to DIAGNOSTIC PROCEDURE 6, RS-31.**

8. Touch PRINT.
9. Compare diagnostic codes to the CONSULT DIAGNOSTIC CODE CHART.
10. Touch BACK key of CONSULT until SELECT SYSTEM MODE appears, then turn off CONSULT.
11. Turn ignition switch OFF, then disconnect CONSULT and both battery cables.
12. Repair the system as outlined by the Repair order that corresponds to the problem code in CONSULT DIAGNOSTIC CODE CHART. For replacement procedure of component parts, refer to RS-9.
13. After repairing the system, go to DIAGNOSTIC PROCEDURE 4, RS-26.

CONSULT DIAGNOSTIC CODE CHART

Diagnostic item	Explanation/Possible causes	Repair order *Recheck SRS using CONSULT at each replacement
NO SELF DIAGNOSTIC FAILURE INDICATED	• No malfunction is detected.	Go to DIAGNOSTIC PROCEDURE 6, RS-31.
AIRBAG MODULE [OPEN]	• Air bag module circuit is open (including the spiral cable).	1. Visually check wiring harness connections. 2. Replace the harness if it has visible damage. 3. Replace air bag module. (Before disposing of it, it must be deployed.) 4. Replace spiral cable. 5. Replace diagnosis sensor unit.
AIRBAG MODULE [VB-SHORT]	• Air bag module circuit is shorted to some power supply circuit (including the spiral cable).	
AIRBAG MODULE [GND-SHORT]	• Air bag module circuit is shorted to ground (including the spiral cable).	
AIRBAG MODULE [SHORT]	• Air bag module circuits are shorted to each other.	
CRASH ZONE SEN-CTR [OPEN/UPR-VB-SHORT] (4WD models)	• Crash zone sensor circuit is open, or • Crash zone sensor circuit is shorted to some power supply circuit.	1. Visually check wiring harness connections. 2. Replace the harness if it has visible damage. 3. Replace crash zone sensor. 4. Replace diagnosis sensor unit. 5. Replace airbag harness for crash zone sensor.
CRASH ZONE SEN-CTR [SHORT/UPR-GND-SHORT] (4WD models)	• Both crash zone sensor circuits are shorted, or • Crash zone sensor circuit is shorted to ground.	
CONTROL UNIT	• Diagnosis sensor unit is out of order.	1. Visually check wiring harness connections. 2. Replace diagnosis sensor unit. 3. Replace the harness if it has visible damage.
INDEFINITE FAILURES [AIR BAG]	• Low battery voltage.	Go to DIAGNOSTIC PROCEDURE 4, RS-26, after charging battery.

***Follow the procedures in numerical order when repairing malfunctioning parts. Confirm whether malfunction is eliminated using the "AIR BAG" warning lamp (in User mode) or CONSULT each time repair is finished. If malfunction is still observed, proceed to the next step. When malfunction is eliminated, further repair work is not required.**

Self-diagnosis (Cont'd)

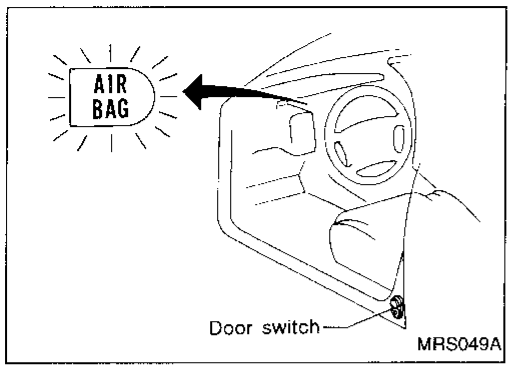

DIAGNOSTIC PROCEDURE 3 (without CONSULT)

Inspecting SRS malfunctioning parts by using "AIR BAG" warning lamp — Diagnosis mode

NOTE:
SRS will not enter Diagnosis mode if no malfunction is detected in User mode.

1. Open driver's door.
2. Turn ignition switch from OFF to ON.
3. Press driver's door switch at least 5 times within 7 seconds after turning ignition switch ON.
   SRS is now in Diagnosis mode.
4. "AIR BAG" warning lamp operates in Diagnosis mode as follows:

NOTE:
If SRS does not enter Diagnosis mode even though malfunction is detected in User mode, go to DIAGNOSTIC PROCEDURE 10, RS-37.

No.	"AIR BAG" warning lamp operation — Diagnosis mode —		SRS condition
1	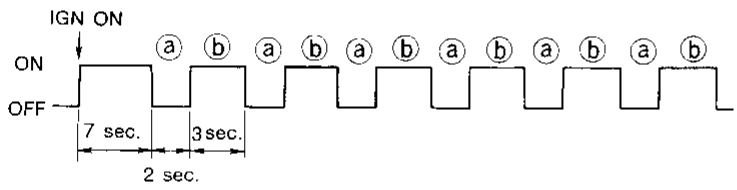 MRS100A	ⓐ through ⓑ are repeated.	Intermittent problem has been detected in the past. Go to DIAGNOSTIC PROCEDURE 7, RS-32.
2	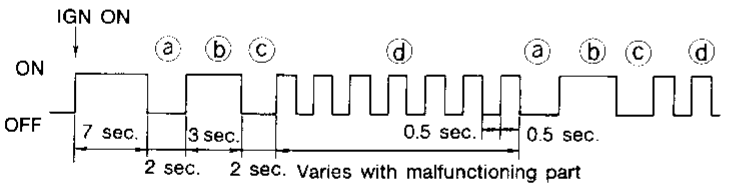 MRS099A	ⓐ through ⓓ are repeated. NOTE: ⓐ — Interval I ⓑ — Start signal (Start signal identifies display modes) ⓒ — Interval II ⓓ — Indicates malfunctioning part (0.5 sec. ON and 0.5 sec. OFF is counted as one flash.)	The system has a problem and needs to be repaired.

5. Malfunctioning part is indicated by the number of flashes (part ⓓ). Compare the number of flashes to WARNING LAMP FLASH CODE CHART and locate malfunctioning part.
6. Turn ignition switch OFF, and disconnect both battery cables.
7. Repair the system as outlined by the Repair order in WARNING LAMP FLASH CODE CHART that corresponds to the flash code. For replacement procedure of component parts, refer to RS-9.
8. After repairing the system, go to DIAGNOSTIC PROCEDURE 5, RS-29.

Self-diagnosis (Cont'd)

WARNING LAMP FLASH CODE CHART

Warning lamp	Flash code ⓓ (# of flashes)	Explanation	Repair order *Recheck SRS at each replacement
"AIR BAG" warning lamp	0	● No malfunction is detected.	Go to DIAGNOSTIC PROCEDURE 7, RS-32.
	2	● Air bag module circuit is out of order.	1. Visually check wiring harness connections. 2. Replace spiral cable. 3. Replace air bag module. (Before disposing of it, it must be deployed.) 4. Replace diagnosis sensor unit. 5. Replace main harness.
	6	● Crash zone sensor is out of order.	1. Visually check wiring harness connections. 2. Replace crash zone sensor. 3. Replace diagnosis sensor unit. 4. Replace air bag harness for crash zone sensor. 5. Replace main harness.
	7	● Diagnosis sensor unit is out of order.	1. Visually check wiring harness connections. 2. Replace diagnosis sensor unit. 3. Replace main harness.
	9	● Low battery or SRS system voltage. ("Flash code 9" may not show up even if the battery voltage is low.)	1. Check and, if necessary, charge battery, then go to DIAGNOSTIC PROCEDURE 5, RS-29. 2. Replace diagnosis sensor unit.

***Follow the procedures in numerical order when repairing malfunctioning parts. Confirm whether malfunction is eliminated using the "AIR BAG" warning lamp (in User mode) or CONSULT each time repair is finished. If malfunction is still observed, proceed to the next step. When malfunction is eliminated, further repair work is not required.**

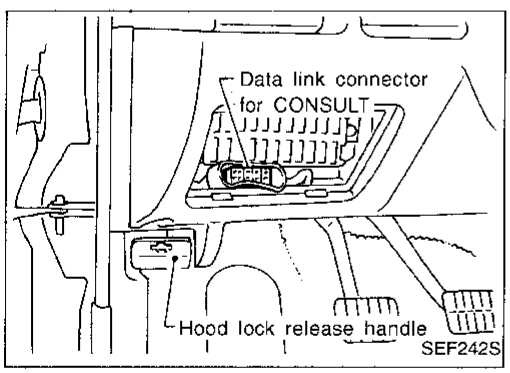

DIAGNOSTIC PROCEDURE 4 (with CONSULT)

Final checking after repairing SRS by using CONSULT — Diagnosis mode

1. After repairing SRS, connect both battery cables.
2. Connect CONSULT to data link connector.
3. Turn ignition switch from OFF to ON.

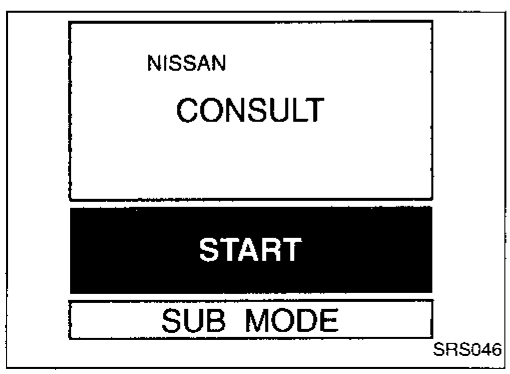

4. Touch START.

Self-diagnosis (Cont'd)

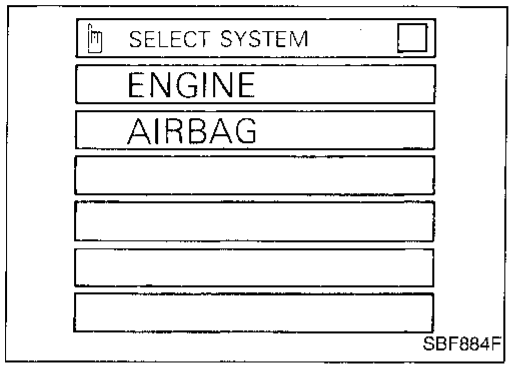

5. Touch AIRBAG.

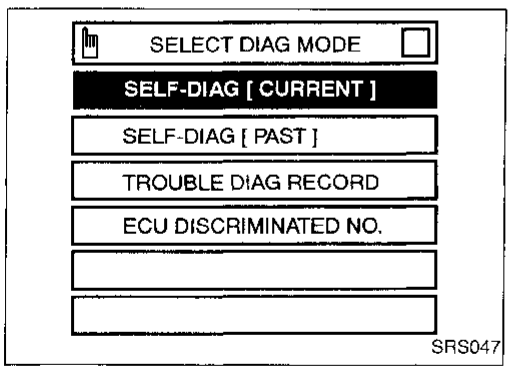

6. Touch SELF-DIAG [CURRENT].

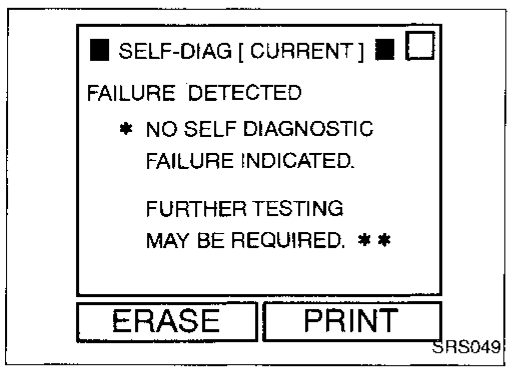

7. If no malfunction is detected on SELF-DIAG [CURRENT], repair of SRS is completed. Touch ERASE.

NOTE:
Touch ERASE to erase problem (Trouble code) retained in memory. Otherwise, the diagnosis sensor unit will still sense a problem in memory when step 13 (Air bag warning lamp operation check) is performed. As a result, the "AIR BAG" warning lamp will still indicate a malfunction in the system.

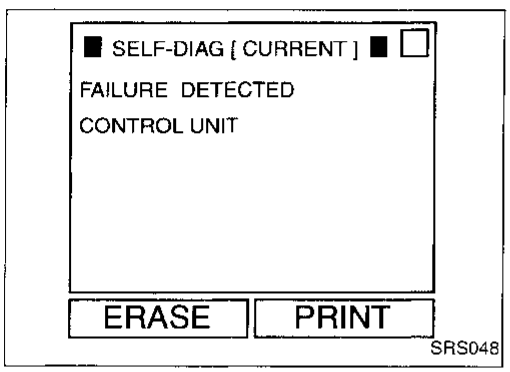

- **If any problem code was displayed on SELF-DIAG [CURRENT], the malfunctioning part is not repaired completely or another malfunctioning part is detected. Go to DIAGNOSTIC PROCEDURE 2, RS-23, and repair malfunctioning part completely.**

8. Touch BACK key of CONSULT.

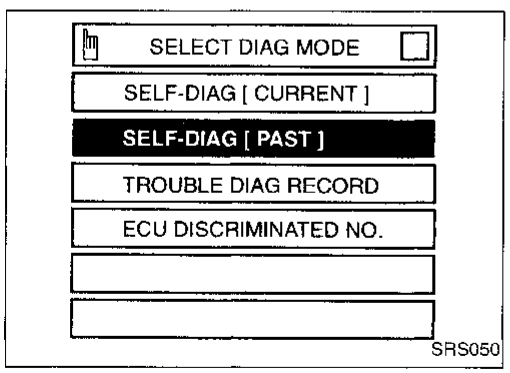

9. Touch SELF-DIAG [PAST].

Self-diagnosis (Cont'd)

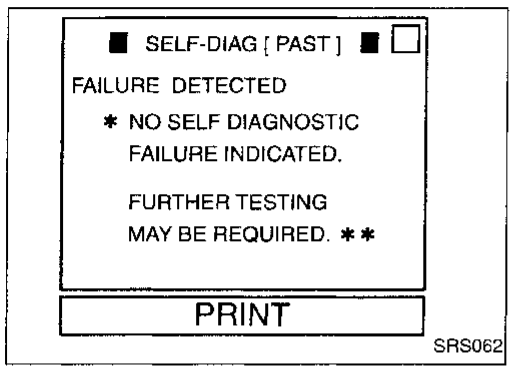

10. Check that no self-diagnostic failure is detected on SELF-DIAG [PAST].
11. Touch BACK key of CONSULT until SELECT SYSTEM MODE appears, turn off CONSULT, then disconnect CONSULT.
12. Turn ignition switch OFF.
13. Go to DIAGNOSTIC PROCEDURE 1, RS-22 to check SRS operation by using "AIR BAG" warning lamp with User mode.

Self-diagnosis (Cont'd)

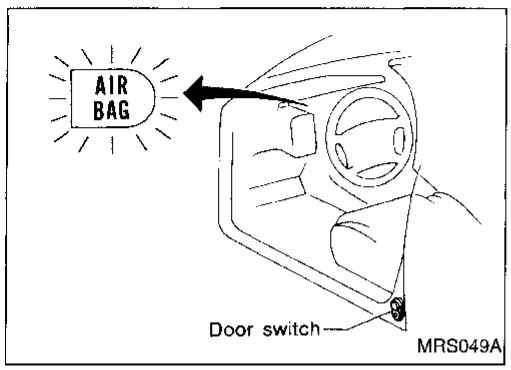

DIAGNOSTIC PROCEDURE 5 (without CONSULT)

Final checking after repairing SRS by using "AIR BAG" warning lamp — Diagnosis mode and User mode

1. After repairing SRS connect both battery cables.
2. Open driver's door.
3. Turn ignition switch from OFF to ON.
4. "AIR BAG" warning lamp operates in Diagnosis mode as follows:

No.	"AIR BAG" warning lamp operation — Diagnosis mode —	SRS condition
1	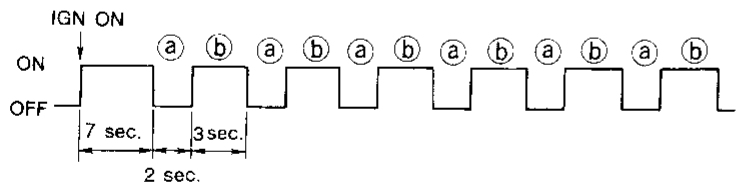 MRS100A ⓐ through ⓑ are repeated.	No malfunction is detected or repair is completed. No further action is necessary.
2	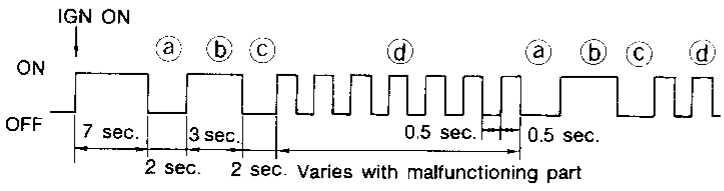 MRS099A ⓐ through ⓓ are repeated. NOTE: ⓐ — Interval I ⓑ — Start signal (Start signal identifies display modes) ⓒ — Interval II ⓓ — Indicates malfunctioning part (0.5 sec. ON and 0.5 sec. OFF is counted as one flash.)	The system has a problem and needs to be repaired.

5. If "AIR BAG" warning lamp operates as shown in No. 1 in the chart above, turn ignition switch OFF to reset from Diagnosis mode to User mode, then go to step 6.

   If "AIR BAG" warning lamp operates as in No. 2 in chart above, the malfunctioning part is not repaired completely, or another malfunctioning part is detected. Go to DIAGNOSTIC PROCEDURE 3, RS-25, and repair malfunctioning part completely.

Self-diagnosis (Cont'd)

6. Turn ignition switch ON. "AIR BAG" warning lamp operates in User mode. Compare "AIR BAG" warning lamp operation to the chart below.

NOTE:
If switching Diagnosis mode to User mode is required while malfunction is being detected, turn ignition switch from OFF to ON. Then press driver's door switch at least 5 times within 7 seconds after turning ignition switch ON.
SRS is now in User mode.

"AIR BAG" warning lamp operation — User mode —	SRS condition	Reference item
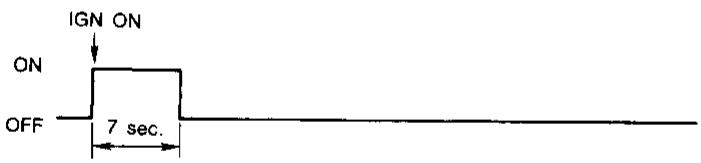 MRS095A	No malfunction is detected. No further action is necessary.	—
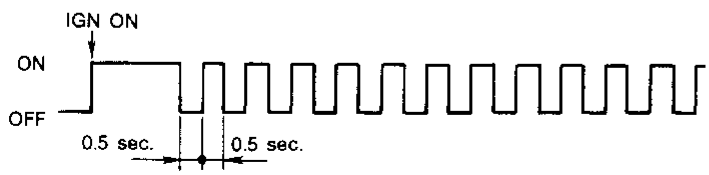 MRS096A	The system has a problem and needs to be repaired as indicated.	Go to DIAGNOSTIC PROCEDURE 2 or 3, RS-23 or 25.
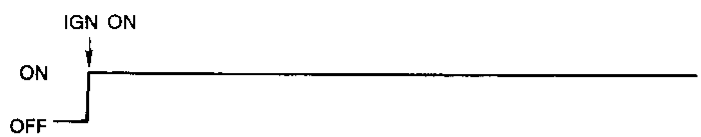 MRS097A	Air bag is deployed.	Go to COLLISION DIAGNOSIS, RS-37.
	Air bag fuse, diagnosis sensor unit or harness is malfunctioning and needs to be repaired.	Go to DIAGNOSTIC PROCEDURE 8, RS-35.
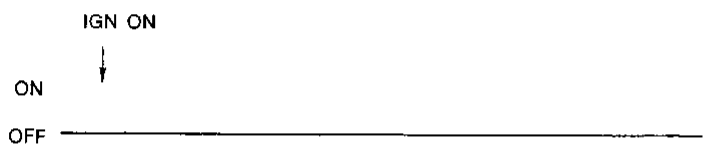 MRS098A	One of the following has occurred and needs to be repaired: ● Meter fuse is open ● "AIR BAG" warning lamp circuit is shorted or open ● Diagnosis sensor unit is malfunctioning	Go to DIAGNOSTIC PROCEDURE 9, RS-35.

Self-diagnosis (Cont'd)

DIAGNOSTIC PROCEDURE 6 (Continued from DIAGNOSTIC PROCEDURE 2)

Inspecting SRS malfunctioning record

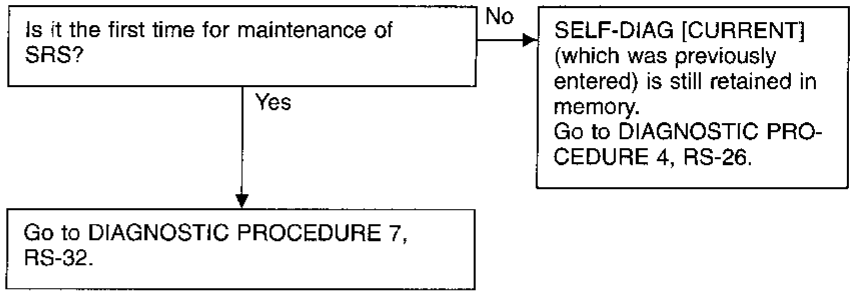

Self-diagnosis (Cont'd)

DIAGNOSTIC PROCEDURE 7 (with CONSULT)

Inspecting SRS intermittent problem by using CONSULT — Diagnosis mode

1. Turn ignition switch OFF.
2. Connect CONSULT to data link connector.

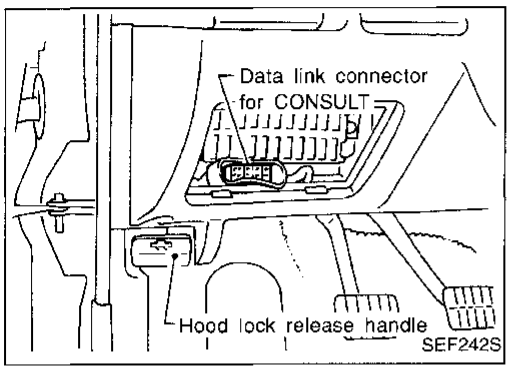

3. Turn ignition switch ON.
4. Touch START.

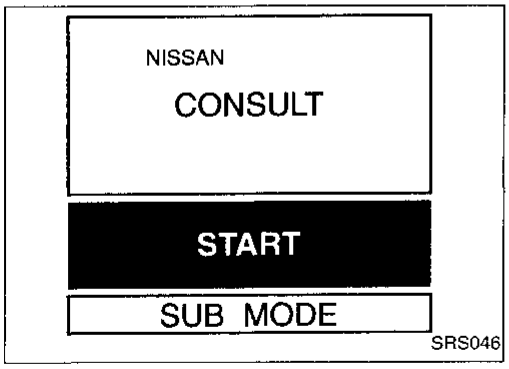

5. Touch AIRBAG.

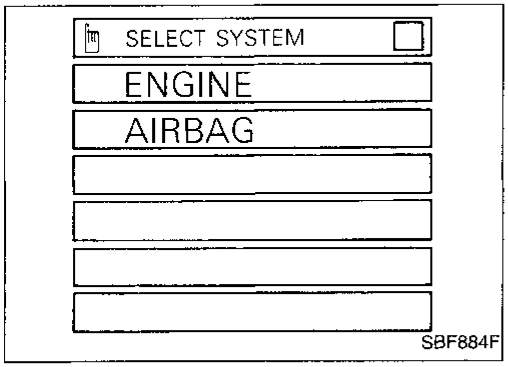

6. Touch SELF-DIAG [PAST].

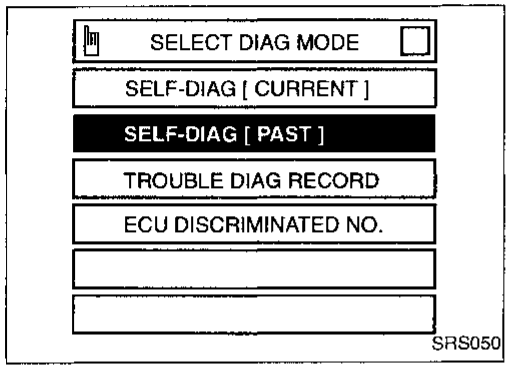

7. If diagnostic codes are displayed on SELF-DIAG [PAST], go to step 10.

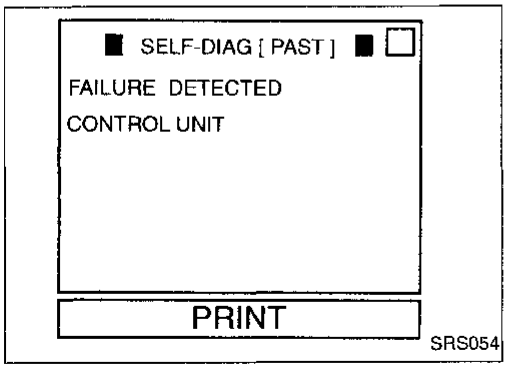

Self-diagnosis (Cont'd)

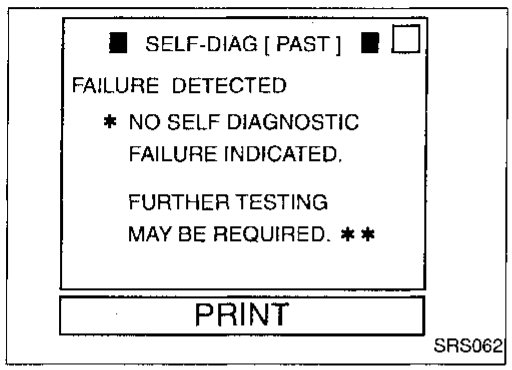

If no self-diagnostic failure is detected on SELF-DIAG [PAST], touch BACK and go back to SELECT DIAG MODE.

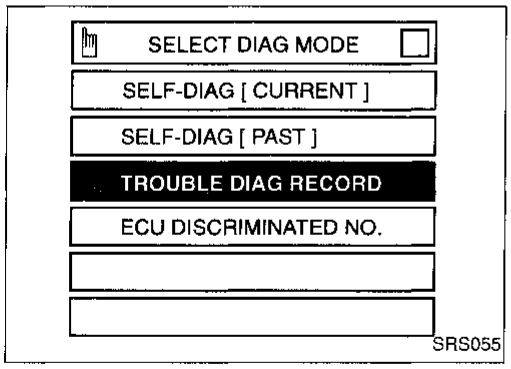

8. Touch TROUBLE DIAG RECORD.

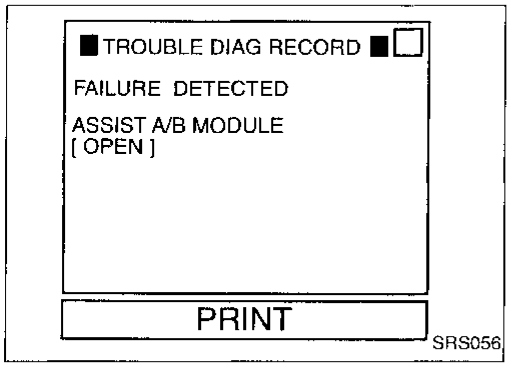

9. Diagnostic code is displayed on TROUBLE DIAG RECORD.

10. Touch PRINT.
11. Compare diagnostic codes to the INTERMITTENT PROBLEM DIAGNOSTIC CODE CHART.
12. Touch BACK key of CONSULT until SELECT SYSTEM MODE appears, then turn off CONSULT.
13. Turn ignition switch OFF, then disconnect CONSULT and both battery cables.
14. Repair the system as outlined by the Repair order that corresponds to the problem code in INTERMITTENT PROBLEM DIAGNOSTIC CODE CHART. For replacement procedure of component parts, refer to RS-9.
15. Go to DIAGNOSTIC PROCEDURE 4, RS-26 for final checking.

Self-diagnosis (Cont'd)

INTERMITTENT PROBLEM DIAGNOSTIC CODE CHART

Diagnostic item	Explanation	Repair order Recheck SRS at each replacement.
NO SELF DIAGNOSTIC FAILURE INDICATED.	● No malfunction is detected.	—
AIRBAG MODULE [VB-SHORT]	● Air bag module circuit is shorted to some power supply circuit (including the spiral cable).	1. Visually check wiring harness connection. 2. Replace harness if it has visible damage. 3. Replace spiral cable.
AIRBAG MODULE [OPEN]	● Air bag module circuit is open (including the spiral cable).	1. Visually check wiring harness connection. 2. Replace harness if it has visible damage. 3. Replace spiral cable. 4. Replace air bag module. (Before disposing of it, it must be deployed.)
AIRBAG MODULE [GND-SHORT]	● Air bag module circuit is shorted to ground (including the spiral cable).	
AIRBAG MODULE [SHORT]	● Air bag module circuits are shorted to each other.	
CRASH ZONE SEN-CTR [OPEN/UPR-VB-SHORT] (4WD models)	● Crash zone sensor circuit is open, or ● Crash zone sensor circuit is shorted to a power supply circuit.	1. Visually check wiring harness connections. 2. Replace harness if it has visible damage.
CRASH ZONE SEN-CTR [SHORT/UPR-GND-SHORT] (4WD models)	● Both crash zone sensor circuits are shorted, or ● Crash zone sensor circuit is shorted to ground.	1. Visually check wiring harness connections. 2. Replace harness if it has visible damage. 3. Replace crash zone sensor.
CONTROL UNIT	● Diagnosis sensor unit is out of order.	● Replace diagnosis sensor unit.

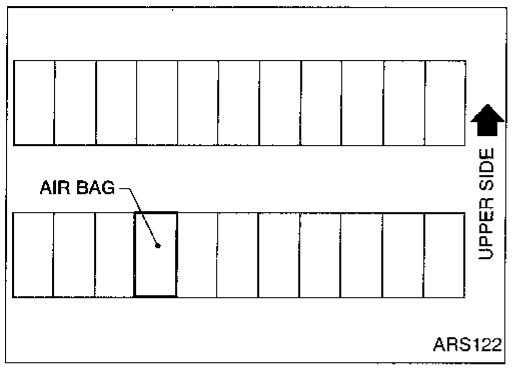

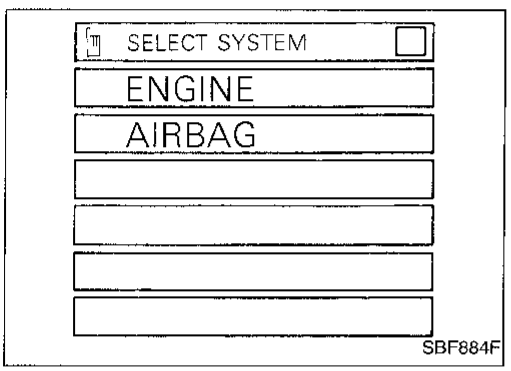

Trouble Diagnoses for Air Bag Warning Lamp

DIAGNOSTIC PROCEDURE 8

SYMPTOM: "AIR BAG" warning lamp does not turn off.

- Is air bag module deployed? — Yes → Replace air bag module and diagnosis sensor unit. Refer to COLLISION DIAGNOSIS, RS-38.
- No ↓
- Is SRS "Air Bag" fuse OK? — No → Replace fuse.
- Yes ↓
- Connect CONSULT and touch START.
  - Is AIRBAG displayed on CONSULT? — No → Replace diagnosis sensor unit.
- Yes ↓
- Is harness connection between warning lamp and diagnosis sensor unit OK? — No → Connect warning lamp and diagnosis sensor unit properly. If warning lamp still does not go off, replace harness.
- Yes ↓
- Replace diagnosis sensor unit.

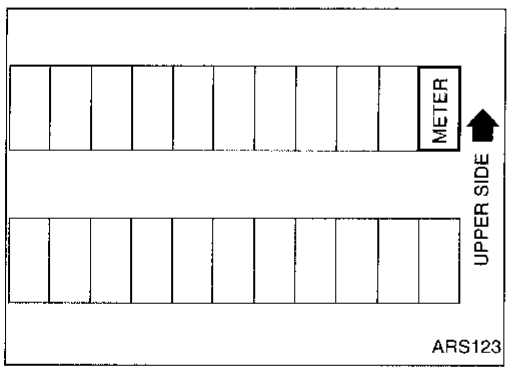

DIAGNOSTIC PROCEDURE 9

SYMPTOM: "AIR BAG" warning lamp does not turn on.

- Is warning lamp fuse OK? — No → Replace fuse.
- Yes ↓
- 1. Disconnect diagnosis sensor unit connector.
  2. Turn ignition key to ON position.
  - Does warning lamp turn on? — Yes → Replace diagnosis sensor unit.
- No ↓
- Is warning lamp LED ok? — No → Replace warning lamp LED.
- Yes ↓
- Is harness connection between warning lamp and diagnosis sensor unit ok? — No → Connect warning lamp and diagnosis sensor unit connector properly.
- Yes ↓
- Replace harness.

Trouble Diagnoses for Air Bag Warning Lamp (Cont'd)

DIAGNOSTIC PROCEDURE 10

SYMPTOM: SRS does not enter Diagnosis mode.

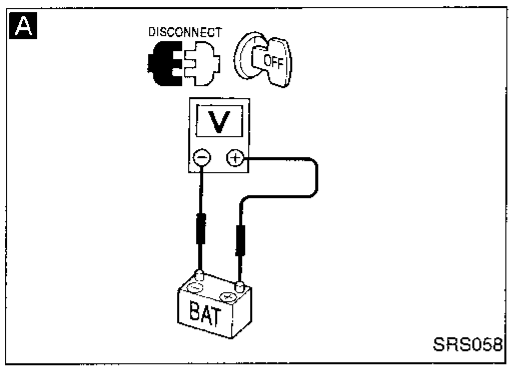

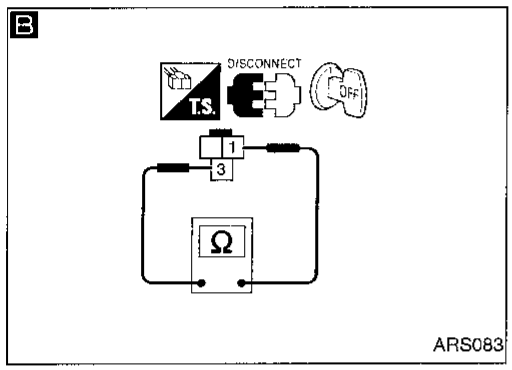

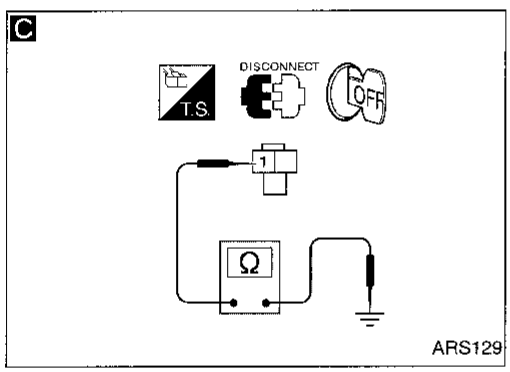

A

Disconnect both battery cables and check battery voltage using circuit tester.
- Is battery voltage more than 9V?

No → Charge battery.

Yes ↓

B

Remove driver's door switch and check continuity between driver's door switch connector terminals ① and ③ under the following conditions.

Condition	Continuity
Door switch is depressed (Door is closed).	NO
Door switch is released (Door is open).	YES

No → Replace driver's door switch.

Yes ↓

C

Check harness continuity between driver's door switch connector terminal ① and body ground.
- Does continuity exist?

No → Replace or repair harness.

Yes ↓

Replace diagnosis sensor unit.

↓

Go to DIAGNOSTIC PROCEDURE 3, RS-25

To repair the SRS, perform the following steps.

When SRS is activated in a collision:

① Replace the diagnosis sensor unit.
② Remove the air bag module.
③ Check the SRS components using the table shown below:
- Replace any SRS components showing visible signs of damage (dents, cracks, deformation).

④ Install a new air bag module.
⑤ Conduct self-diagnosis using CONSULT and "AIR BAG" warning lamp. Refer to "Self diagnosis", RS-22, for details. Ensure that the entire SRS operates properly.

When SRS is not activated in a collision:

① Check the SRS components using the table shown below:
- Replace any SRS components showing visible signs of damage (dents, cracks, deformation).

② Conduct self-diagnosis using CONSULT and "AIR BAG" warning lamp. Refer to "Self-diagnosis", RS-22 for details. Ensure that the entire SRS operates properly.

SRS inspection

Part	SRS is activated	SRS is NOT activated
Air bag module	REPLACE. Install with new bolts.	1. Remove air bag module. Check harness cover and connectors for damage, terminals for deformities, and harness for binding. 2. Install air bag module into the steering wheel to check fit and alignment with the wheel. 3. If no damage is found, reinstall with new bolts. 4. If damaged—REPLACE. Air bag module must be deployed before discarding.
Crash zone sensor (4WD models)	1. Check body and sensor bracket for deformities and rust. 2. Check sensor case for dents, cracks, scratches, deformities and rust. 3. Check sensor harness, connector, and terminals for binding, damage, and deformities. 4. If no damage is found, reinstall with new bolts. 5. If damaged—REPLACE.	
Diagnosis sensor unit	REPLACE. Install with new bolts.	1. Check case and bracket for dents, cracks and deformities. 2. Check connectors for damage and terminals for deformities. 3. If no damage is found, reinstall with new bolts. 4. If damaged—REPLACE.
Steering wheel	1. Visually check steering wheel for deformities. 2. Check harness (built into steering wheel) and connectors for damage and terminals for deformities. 3. Install air bag module to check fit and alignment with steering wheel. 4. Check steering wheel for excessive free play. 5. If no damage is found, reinstall with new bolts. 6. If damaged—REPLACE.	
Spiral cable	1. Visually check spiral cable and combination switch for damage. 2. Check connectors, flat cable and protective tape for damage. 3. Check steering wheel for noise, binding and heavy operation. 4. If no damage is found, reinstall with new bolts. 5. If damaged—REPLACE.	
Harness and Connectors	1. Check connectors for poor connection and damage and terminals for deformities. 2. Check harness for binding, chafing, cuts and deformities. 3. If no damage is found, reinstall. 4. Damaged—REPLACE damaged section of harness. Do not attempt to repair, splice or modify any SRS harness.	

SECTION BT

CONTENTS

PRECAUTIONS 2
Supplemental Restraint System (SRS) "AIR BAG" 2
GENERAL SERVICING 3
Clip and Fastener 3
BODY END 6
Front End 6
Rear End 7
Step Bumper 8
DOOR 9
Front Door 9
INSTRUMENT PANEL 10
INTERIOR TRIM 13
Side and Floor Trim — Passenger room 13
Roof Trim 15
EXTERIOR 17
SEAT 23
Front Seat 23
Jump Seat — King Cab Model 24
SUNROOF 25
Service Procedure 25
WINDSHIELD AND WINDOWS 26
Windshield 27
Back Window 28
Rear Side Window 29
MIRROR 30
Door Mirror 30
Rearview Mirror 31
CAB AND REAR BODY 32
Removal 32
Cab Body 32
Rear Body 32
Body Mounting 33
BODY ALIGNMENT 34
Engine Compartment 35
Underbody 36

★ **For seat belt, refer to MA and RS section.**
★ **For wiring diagrams of body electrical systems, refer to EL section.**

- When removing or installing various parts, place a cloth or padding on the vehicle body to prevent scratches.
- Handle trim, molding, instruments, grille, etc., carefully during removal or installation. Be careful not to soil or damage them.
- Apply sealing compound where necessary when installing parts.
- When applying sealing compound, be careful that the sealing compound does not protrude from parts.
- When replacing any metal parts (for example, body outer panel, members, etc.), be sure to take rust prevention measures.

Supplemental Restraint System (SRS) "AIR BAG"

The Supplemental Restraint System "Air Bag", used along with a seat belt, helps to reduce the risk or severity of injury to the driver in a frontal collision. The Supplemental Restraint System consists of an air bag module (located in the center of the steering wheel), a diagnosis sensor unit, warning lamp, wiring harness, a crash zone sensor (4WD models) and spiral cable. Information necessary to service the system safely is included in the **RS section** of this Service Manual.

WARNING:

- **To avoid rendering the SRS inoperative, which could increase the risk of personal injury or death in the event of a collision which would result in air bag inflation, all maintenance must be performed by an authorized NISSAN dealer.**
- **Improper maintenance, including incorrect removal and installation of the SRS, can lead to personal injury caused by unintentional activation of the system.**
- **Do not use electrical test equipment on any circuit related to the SRS unless instructed to in this Service Manual. SRS wiring harnesses are covered with yellow insulation either just before the harness connectors or for the complete harness, for easy identification.**

Clip and Fastener

- Clips and fasteners in BT section correspond to the following numbers and symbols.
- Replace any clips and/or fasteners which are damaged during removal or installation.

Symbol No.	Shapes	Removal & Installation
C101	SBF302H	**Removal:** Remove by bending up with flat-bladed screwdrivers or clip remover. SBF367BA
C103	SBF303H	**Removal:** Remove with a clip remover. SBF423H
C203	SBF258G	Push center pin to catching position. (Do not remove center pin by hitting it.) Push **Installation:** SBF708E
CE103	SBF104B	**Removal:** SBF147B

Clip and Fastener (Cont'd)

Symbol No.	Shapes	Removal & Installation
CG104	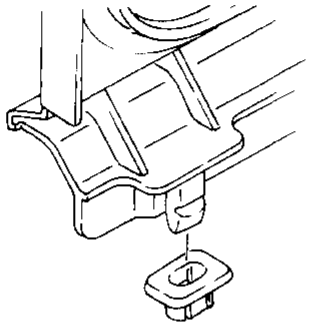 SBF351C	**Removal:** **Remove by bending up with flat-bladed screwdrivers.** 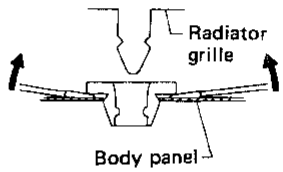 SBF352C
CE114	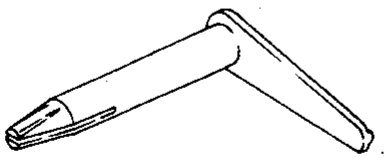 SBF353C	—
CF109	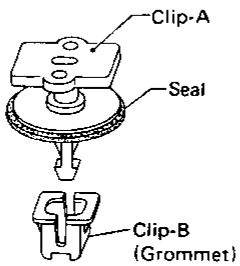 SBF651B	**Removal:** 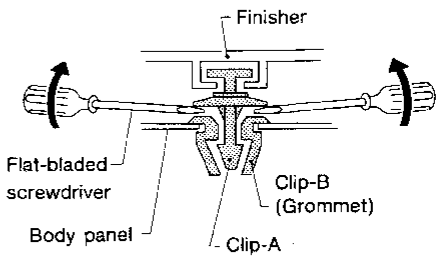 SBF652B
CF110	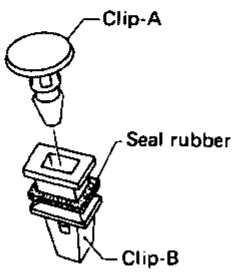 SBF648B	**Removal:** 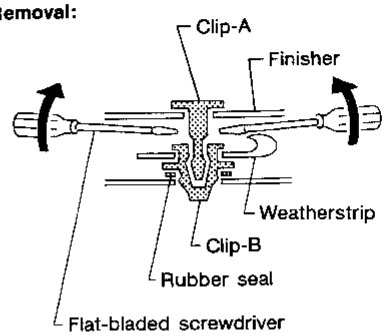 SBF649B
CF114	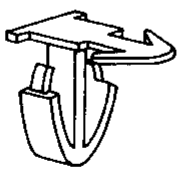 SBF317C	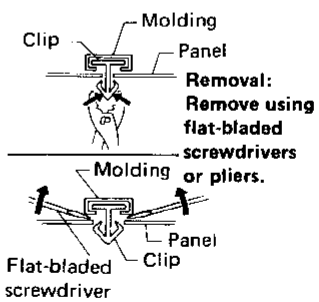 SBF571B

Clip and Fastener (Cont'd)

Symbol No.	Shapes	Removal & Installation
CR103	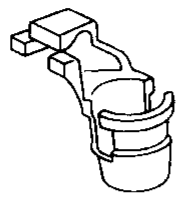 SBF768B	**Removal:** Holder portion of clip must be spread out to remove rod. 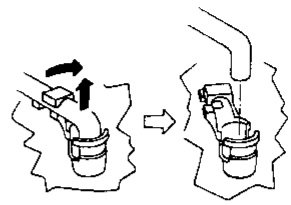 SBF770B
CG101	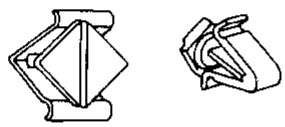 SBF145B	**Removal:** Rotate 45° to remove. **Installation:** **Removal:** 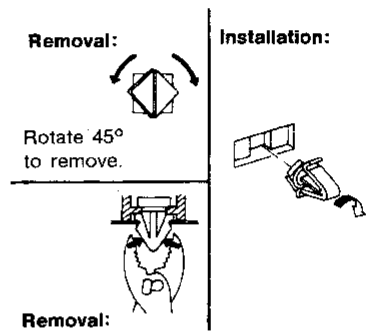 SBF085B
CS101	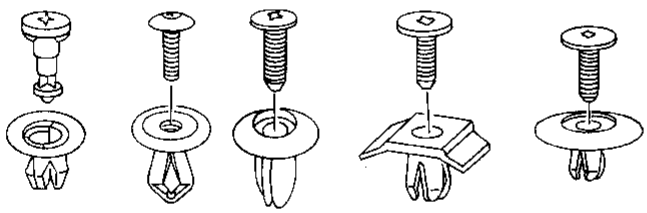 SBF078B	**Removal:** 1. Screw out with a Phillips screwdriver. 2. Remove female portion with flat-bladed screwdriver. 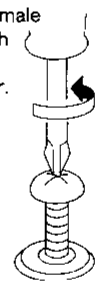 SBF992G

Front End

- Hood adjustment: Adjust at hinge portion.
- Hood lock adjustment: After adjusting, check hood lock control operation. Apply a coat of grease to hood lock engaging mechanism.
- Hood opener: Do not attempt to bend cable forcibly. Doing so could increase effort required to unlock hood.
- Bumper finisher: It is made of plastic. Do not use excessive force and keep oil away from it.

SEC. 260•261•262•620•623•650•656

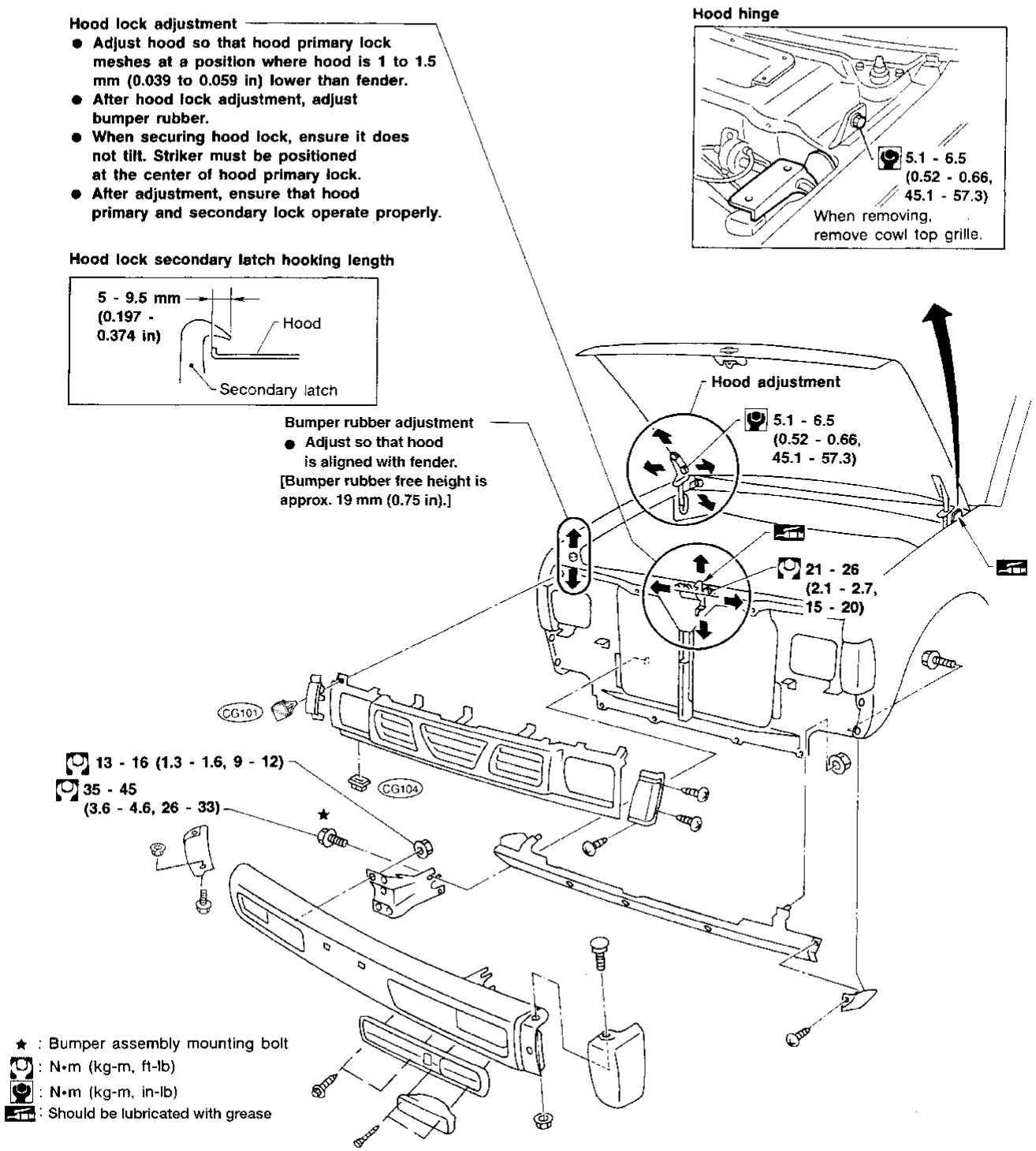

ABT157

Rear End

SEC. 930A • 940A

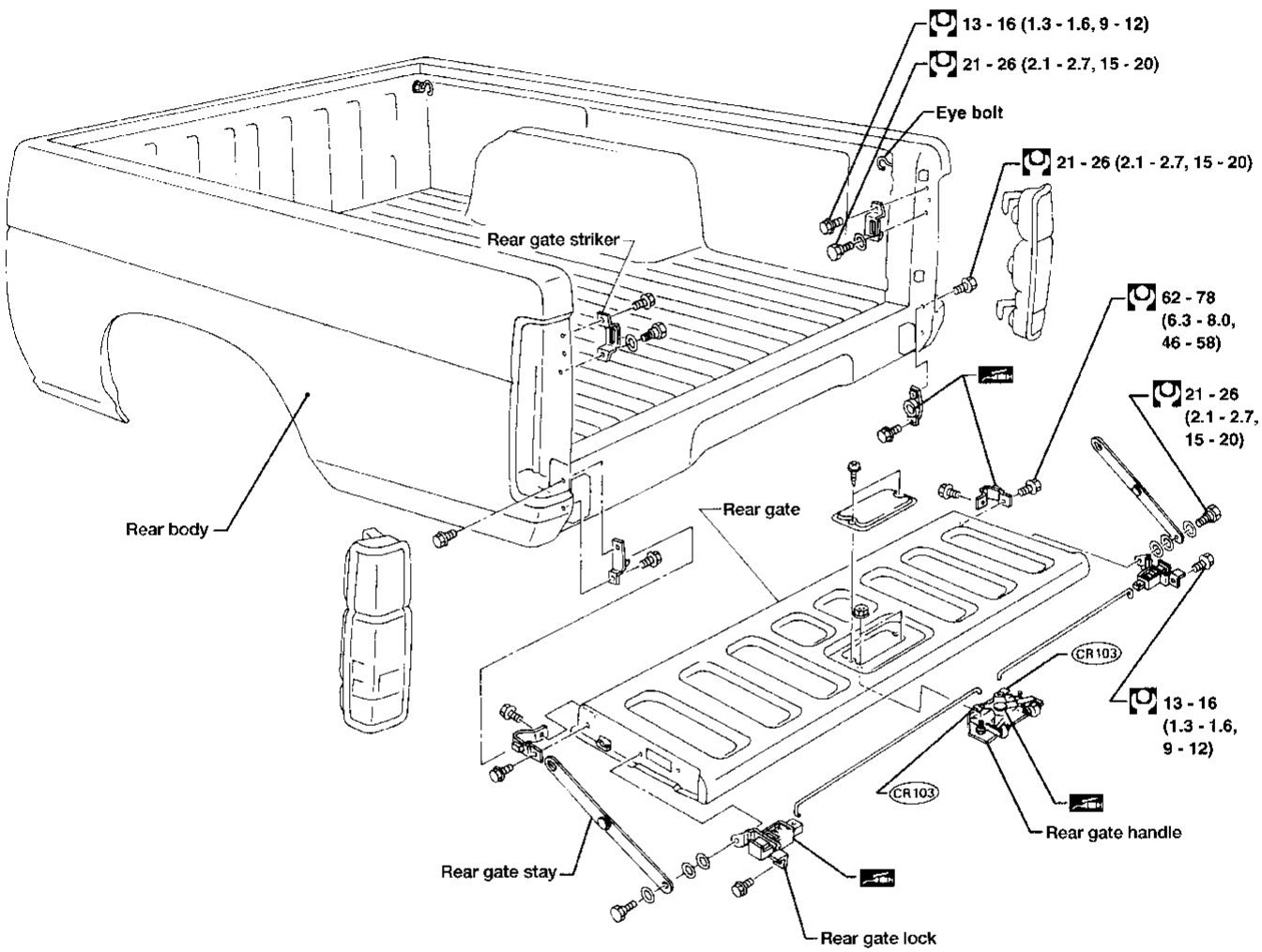

: N·m (kg-m, ft-lb)

: Should be lubricated with grease

ABT152

Step Bumper

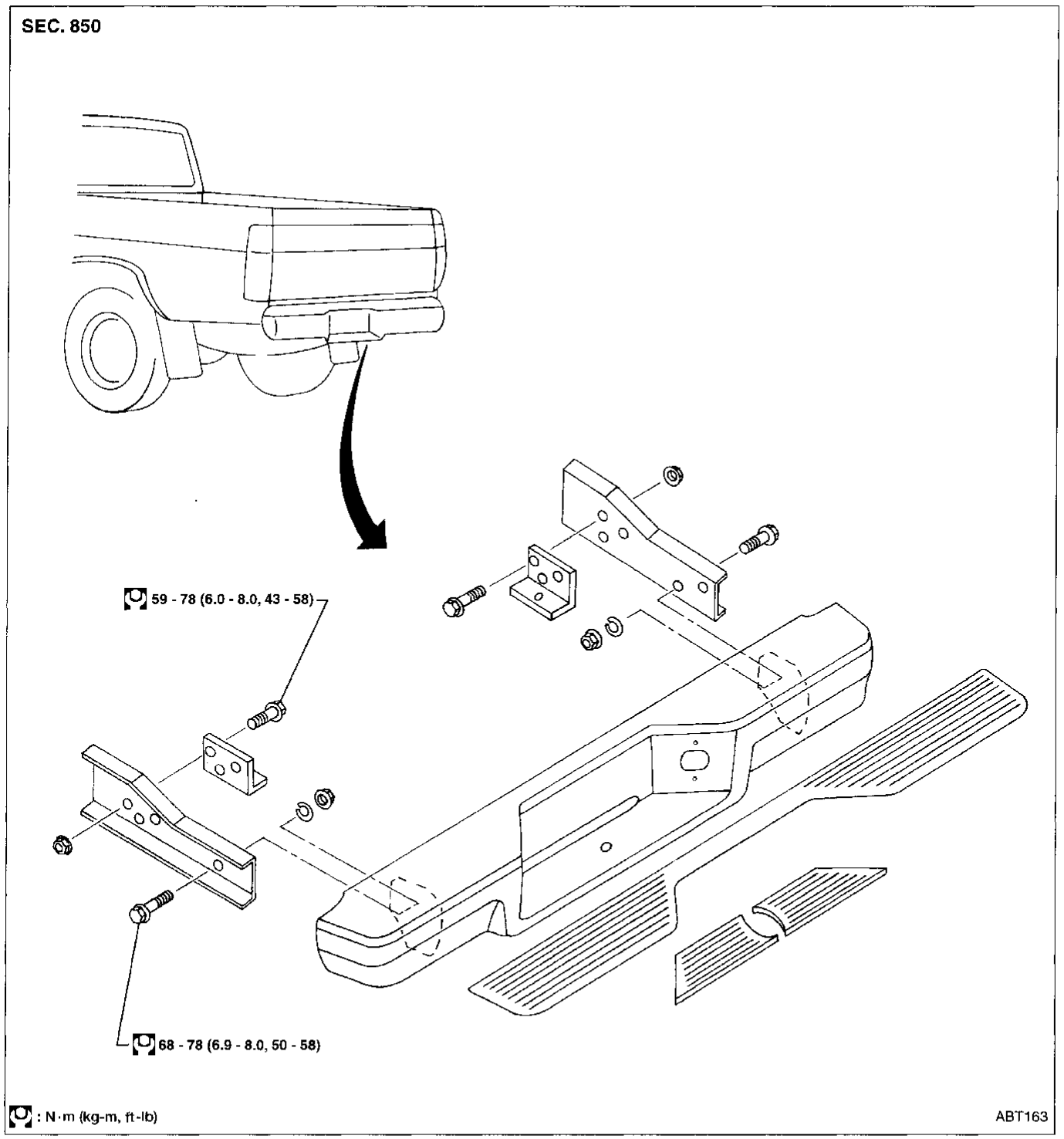

Front Door

- For removal of door trim, refer to "INTERIOR TRIM", BT-13.
- After adjusting door lock, check door lock operation.

SEC. 800•803•805

Outside handle adjustment C
Inside handle installation and adjustment A
Door adjustment B
Front sash adjustment
5.1 - 6.5 (0.52 - 0.66, 45.1 - 57.3)
CR103
3.7 - 5.0 (0.38 - 0.51, 33.0 - 44.3)
Regulator adjustment
Regulator-glass adjustment
Rear sash adjustment

A
Door inner panel
Pawl
Inside handle
Pawl
Escutcheon

B When adjusting door, remove fender protector at first.
Hinge-body adjustment
18 - 26 (1.8 - 2.7, 13 - 20)

C
Turn adjusting nut
0.5 - 1.5 (0.020 - 0.059)
Unit: mm (in)

Striker adjustment
13 - 16 (1.3 - 1.6, 9 - 12)

: N·m (kg-m, in-lb)
: N·m (kg-m, ft-lb)
: Should be lubricated with grease

ABT153

CAUTION:

- **Disconnect both terminals from battery in advance.**
- **Disconnect air bag module connector in advance.**
- **Be careful not to scratch finishers and other parts.**
- **Never tamper with or force air bag lid open, as this may adversely affect air bag performance.**

REMOVAL — Instrument panel assembly

Instrument panel assembly	Combination meter	Audio control	Heater and A/C control	Console box

- Remove air bag module and steering wheel. Refer to RS and ST sections.
- ① Steering column cover
  - Remove four screws.
- ② Instrument lower panel driver side
  - Remove two screws.
  - C
- ③ Cluster lid A
  - Remove four screws.
- ④ Combination meter
  - Remove four screws, then disconnect harness connectors.
- ⑤ Glove box assembly
  - Remove six screws and two pins.
- ⑥ Instrument lower panel passenger side
  - Remove one screw.
- Remove ashtray
- ⑦ Cluster lid C
  - Remove two screws, then disconnect harness connectors.
  - E
- ⑧ Audio and deck pocket
  - Remove four screws, then disconnect harness connectors.
- ⑨ Heater and A/C control
  - Remove mask and two screws.
  - Disconnect temperature control cable and harness connectors.
- ⑩ Instrument stay cover lower center
  - Remove two screws.
  - D
- ⑪ Instrument lower panel center
  - Remove six screws.
- ⑫ Ventilator grille driver side
  - Remove one screw.
  - B
- ⑬ Defroster grille
  - Remove three grilles.
  - A
- Remove left and right front pillar garnishes.
- ⑭ Instrument panel assembly
  - Remove nine screws and bolts marked★.
- ⑮ Center console
  - Remove five screws.
- ⑯ A/T finisher
  - Remove four screws, then disconnect harness connector.

INSTALLATION

Reverse the procedures described above.

Pay attention so as not to scratch the parts (plastic). During installation, fit the ducting parts exactly.

SEC. 272•280•680•685•969

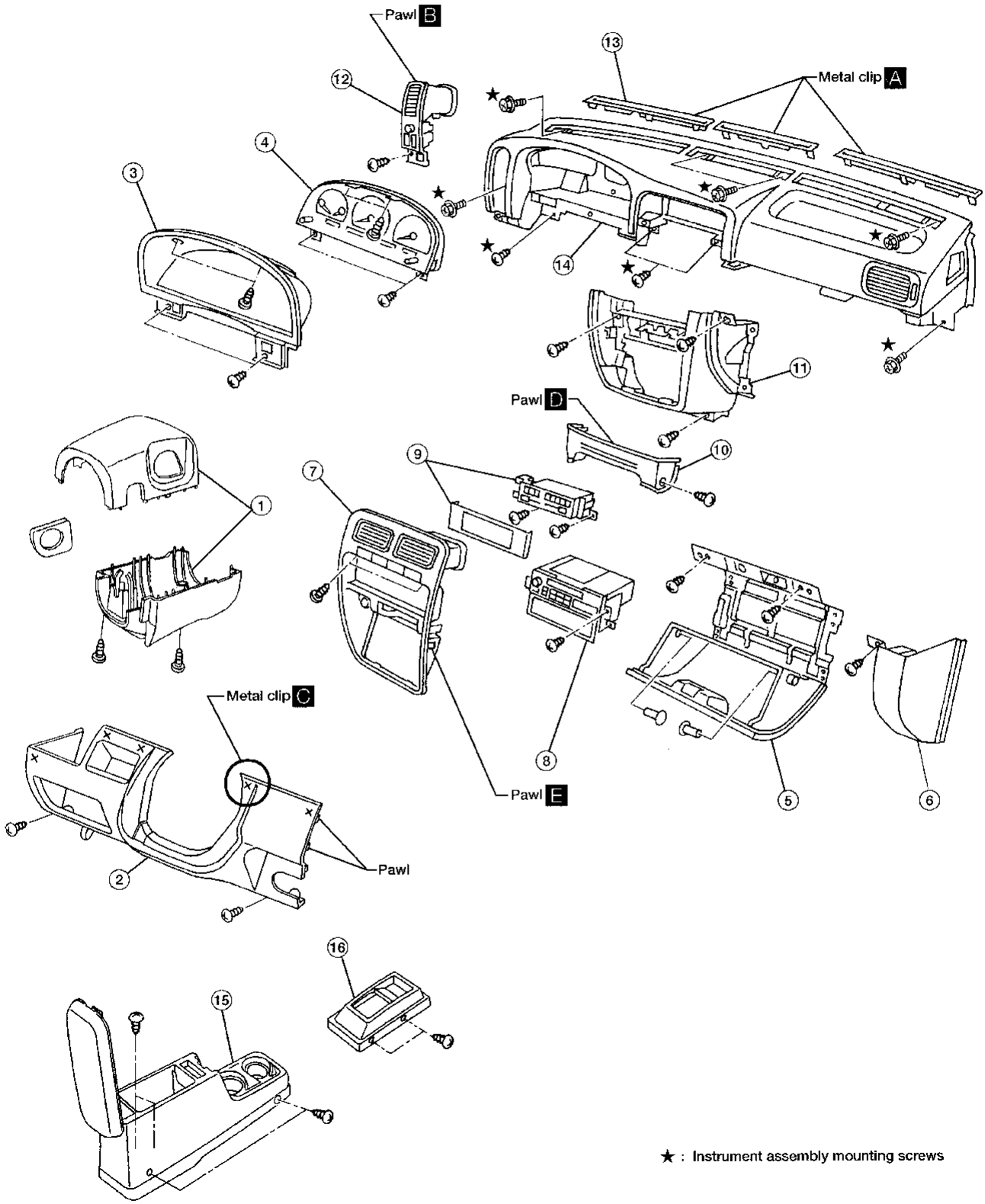

ABT154

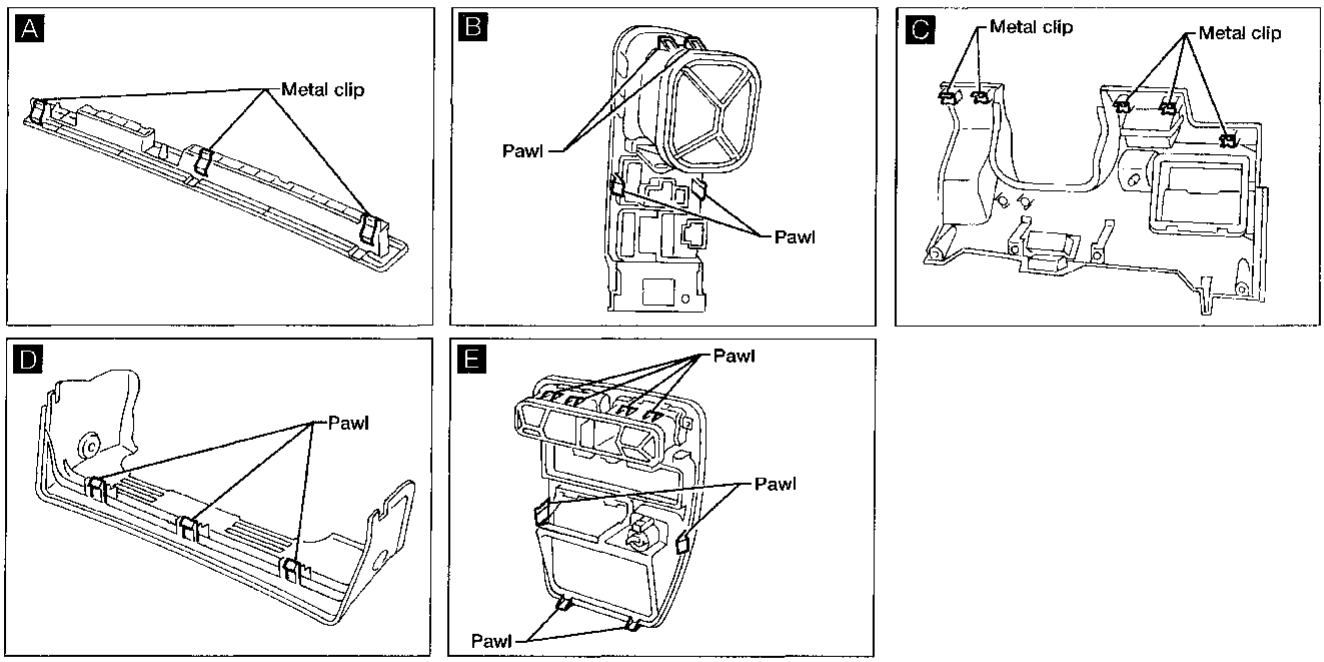
A
Metal clip
B
Pawl
Pawl
C
Metal clip
Metal clip
D
Pawl
E
Pawl
Pawl
Pawl

ABT155

Side and Floor Trim — Passenger room

- Wrap the tip of flat-bladed screwdriver with a cloth when removing metal clips from garnish.
- When handling interior or exterior parts, do not use excessive force and take care not to damage them.

Regular Cab

SEC. 678•749•769•803•805•809

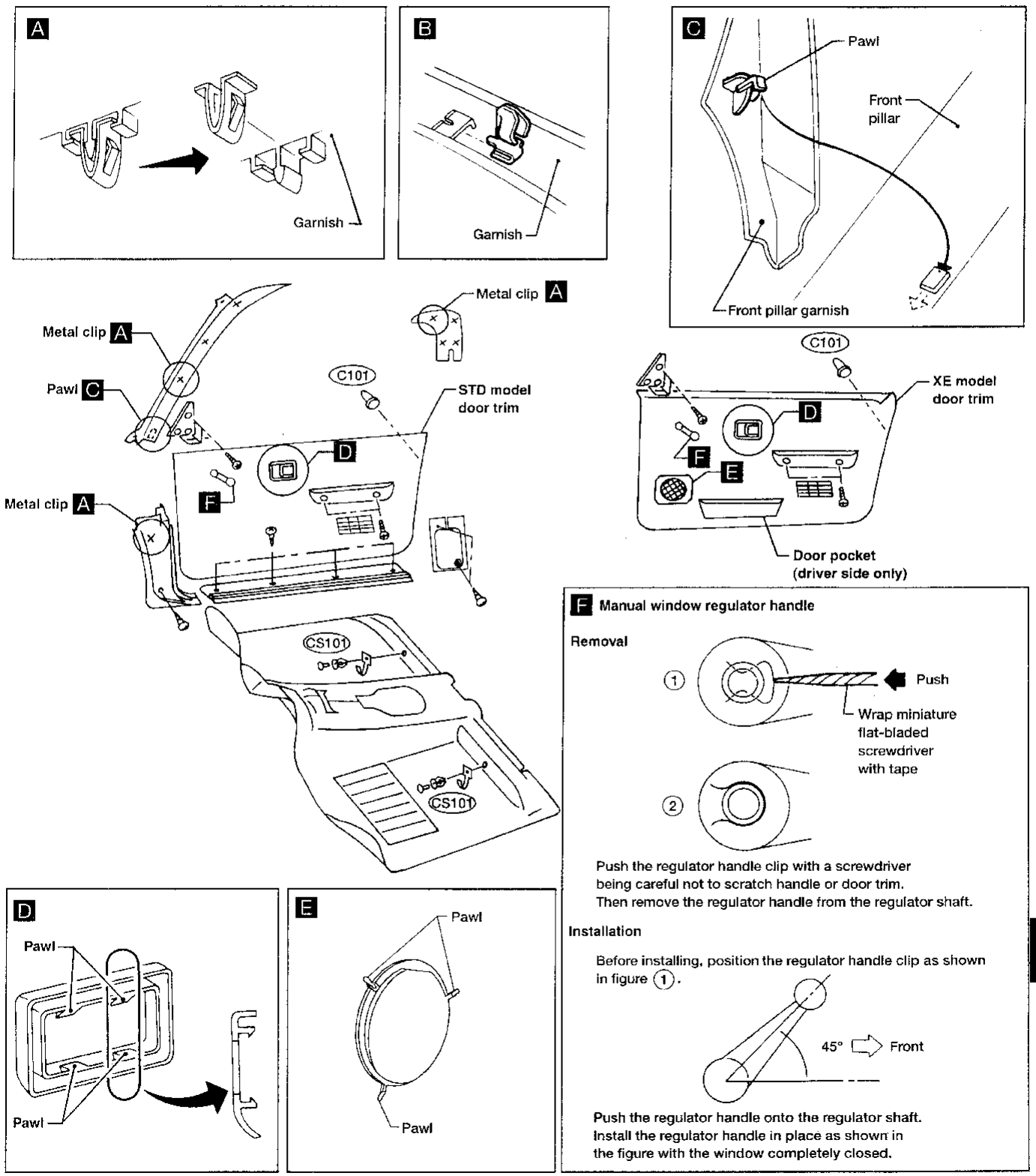

ABT217

Side and Floor Trim — Passenger room (Cont'd)

King Cab

SEC. 678•749•769•799•803•805•809

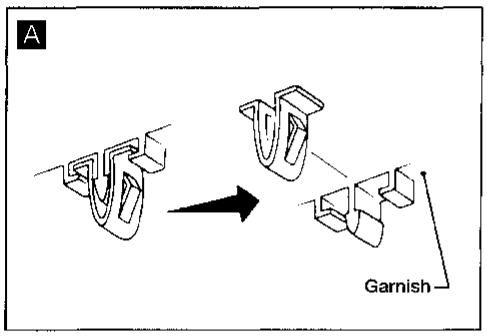

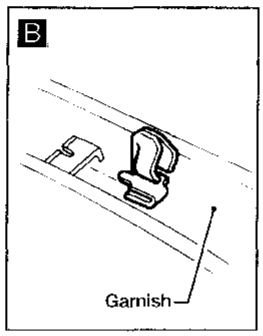

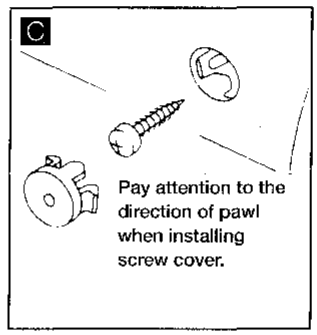

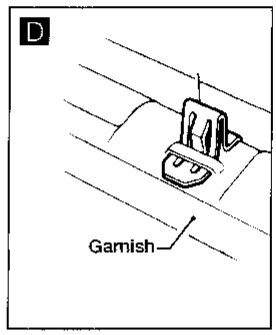

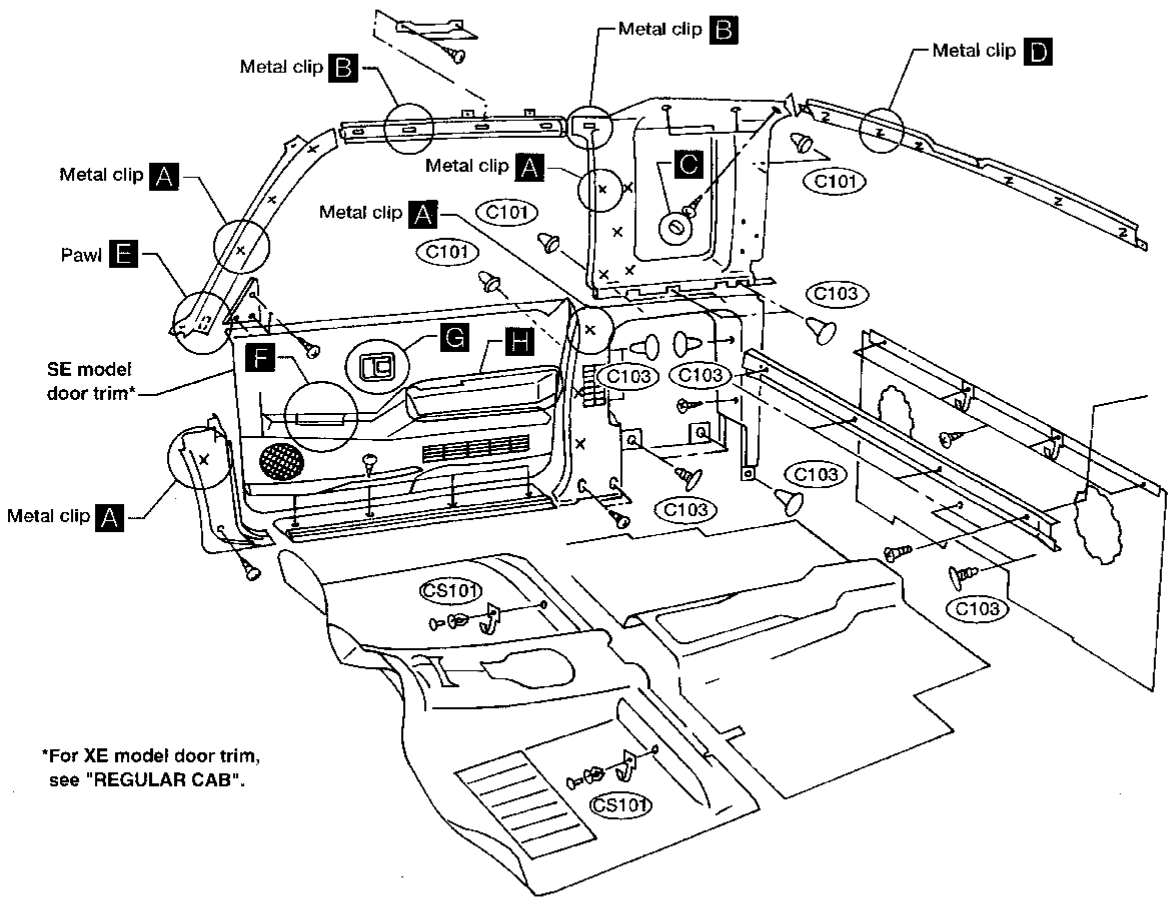

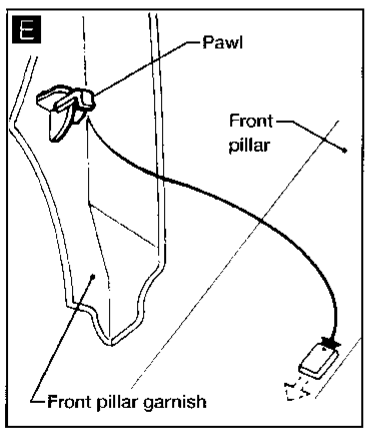

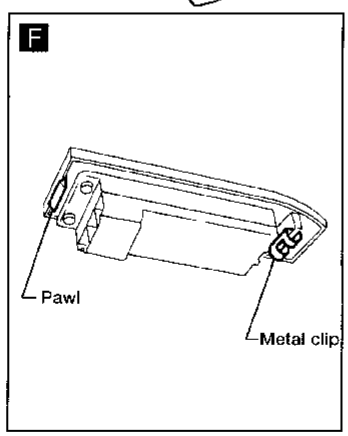

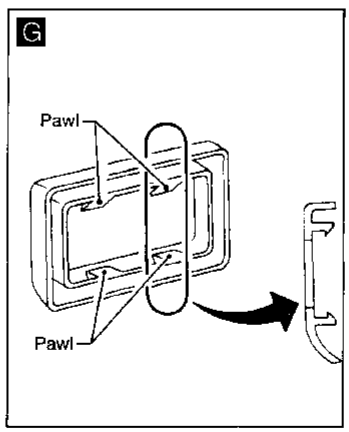

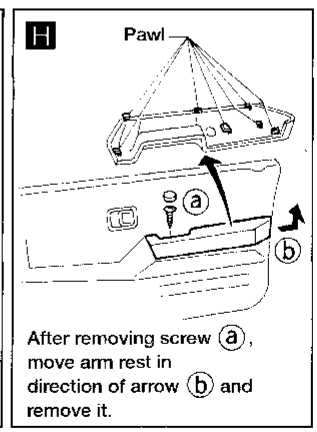

ABT160

Roof Trim

Regular Cab

SEC. 738•769•797•964

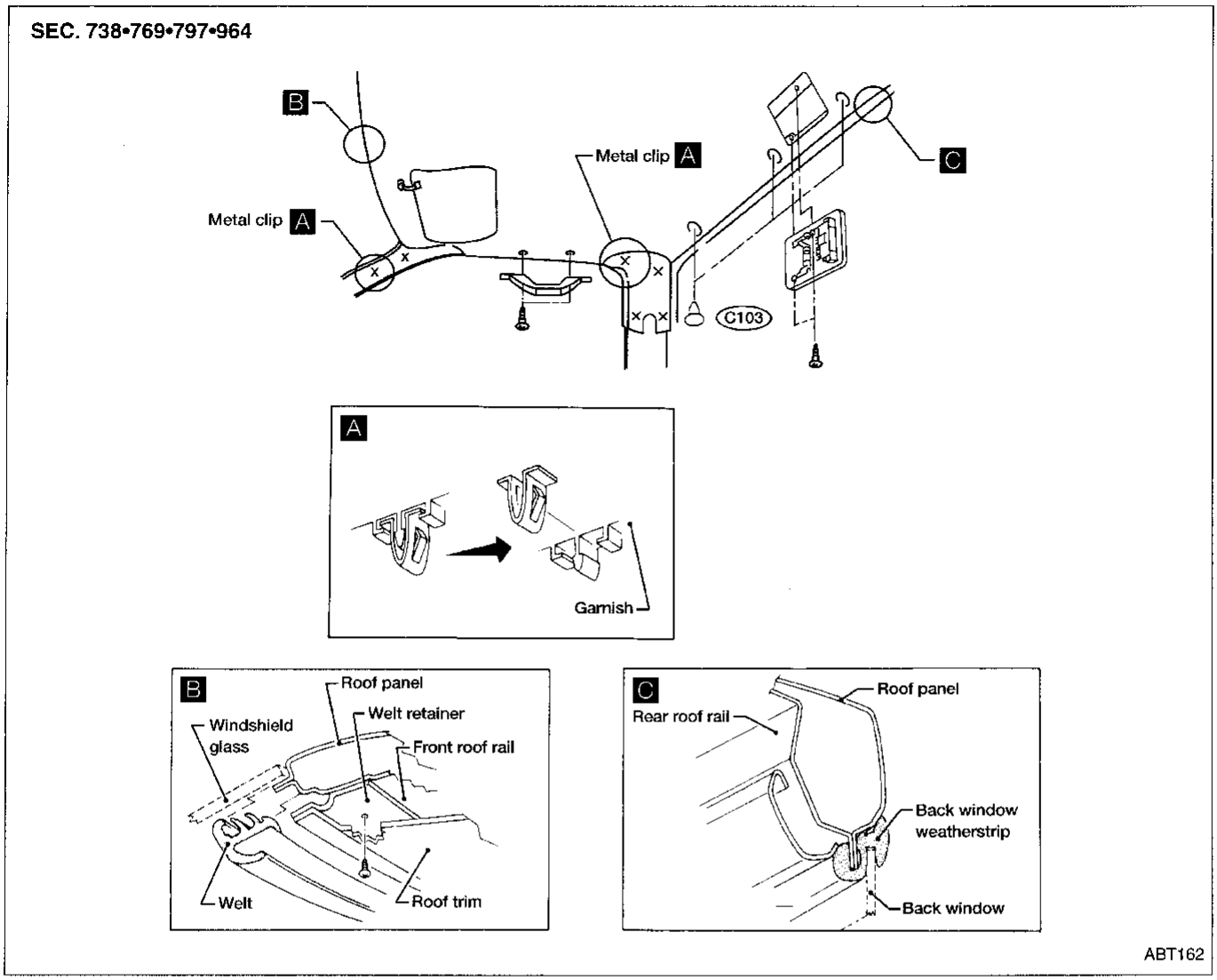

Roof Trim (Cont'd)

King Cab

SEC. 738•769•797•964

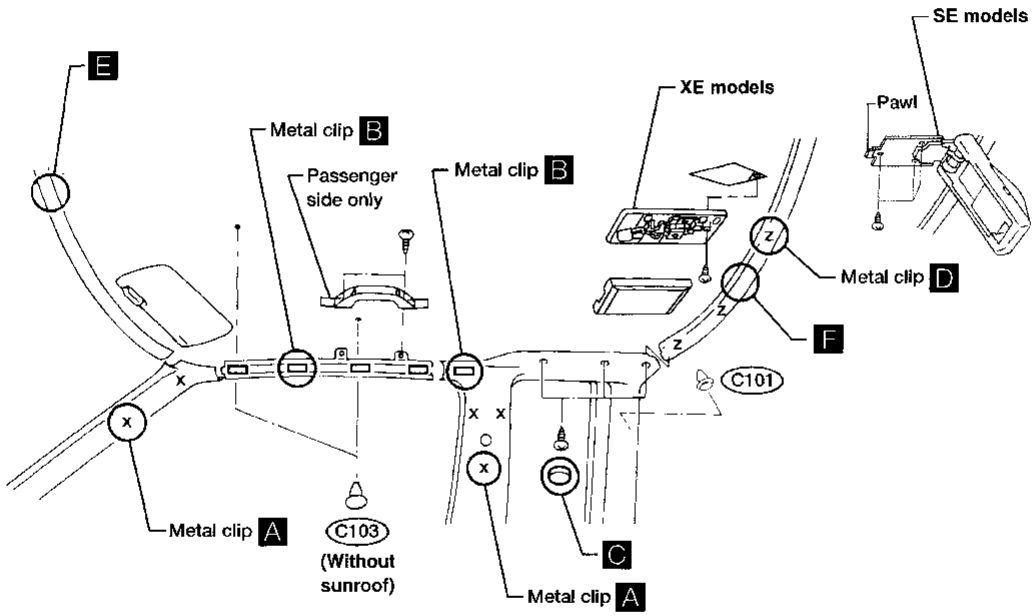

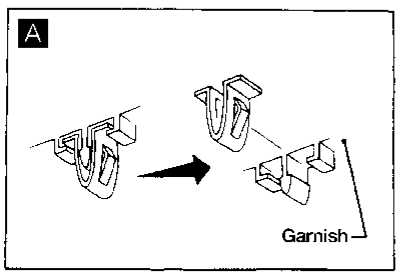

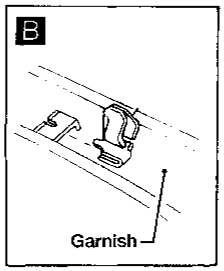

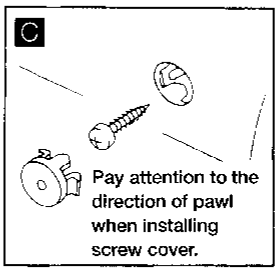

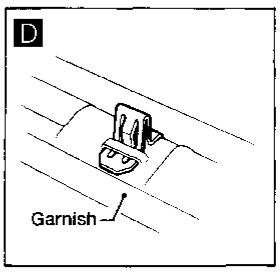

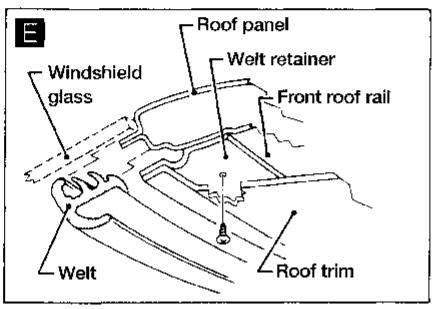

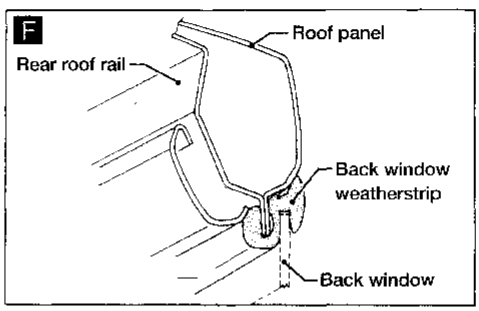

ABT158

- Apply sealing compound where necessary while installing parts.
- When applying sealing compound, be careful that the sealing compound does not protrude from parts.

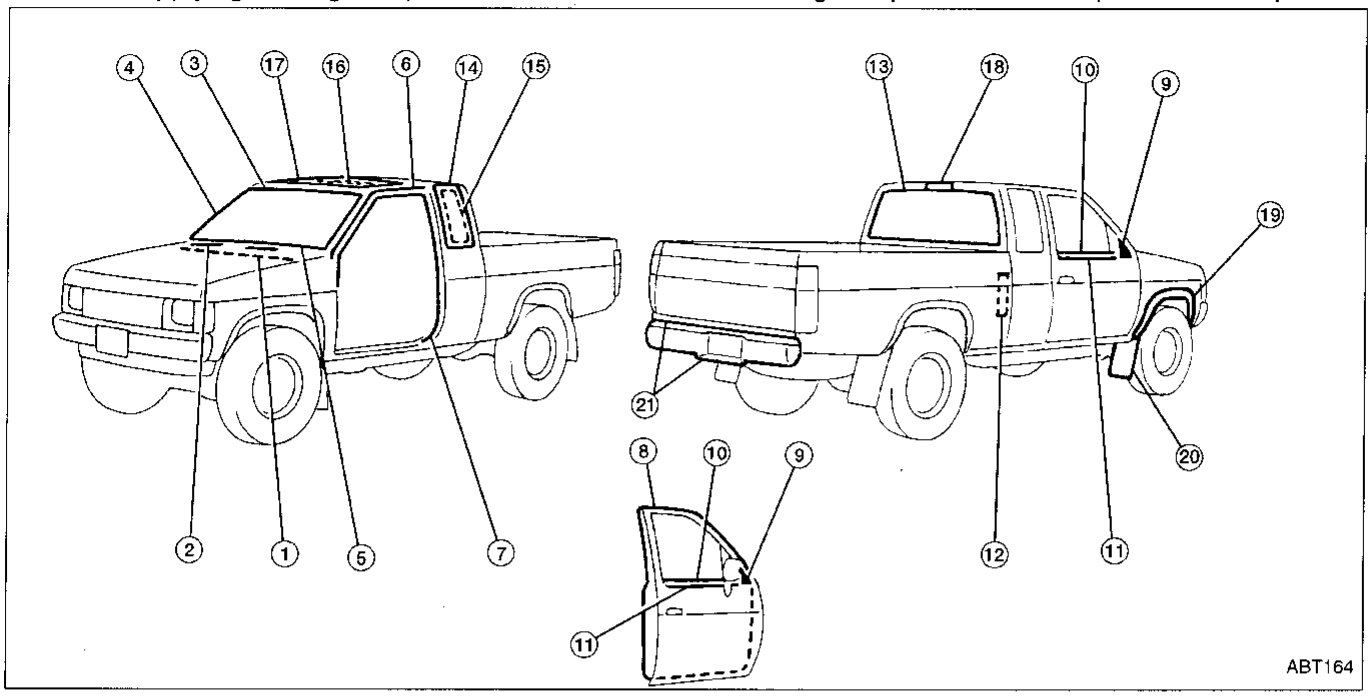

① ② Cowl top sealing rubber & grille

SEC. 660

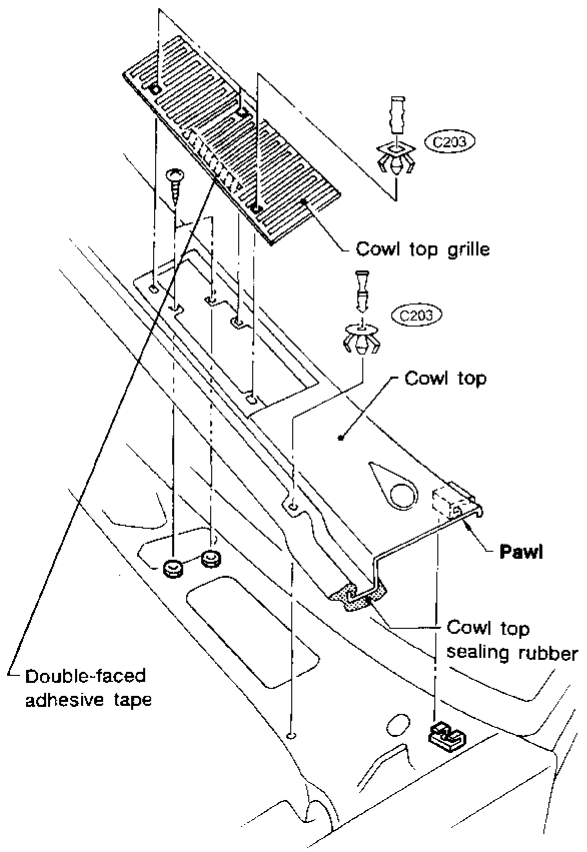

ABT167

③ Windshield upper molding

SEC. 720

Method 1

Cut off top portion of molding and clean glass and panel surfaces.

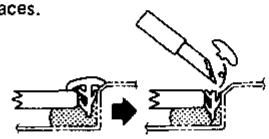

Apply sealant to top portion of molding.

Cut off lower portion of new molding

Finish well to give it a good appearance.

Method 2

1. Cut off sealant at glass end.
2. Clean the side on which panel was mounted.
3. Set molding fastener and apply sealant & primer to body panel, and apply primer to molding.

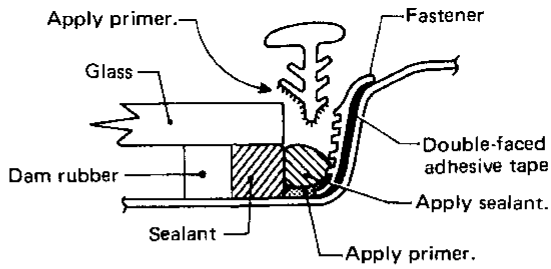

4. Install molding by aligning the molding mark located on center with vehicle center.
   Be sure to install tightly so that there is no gap around the corner.

ABT168

④ ⑤ Windshield side & lower molding

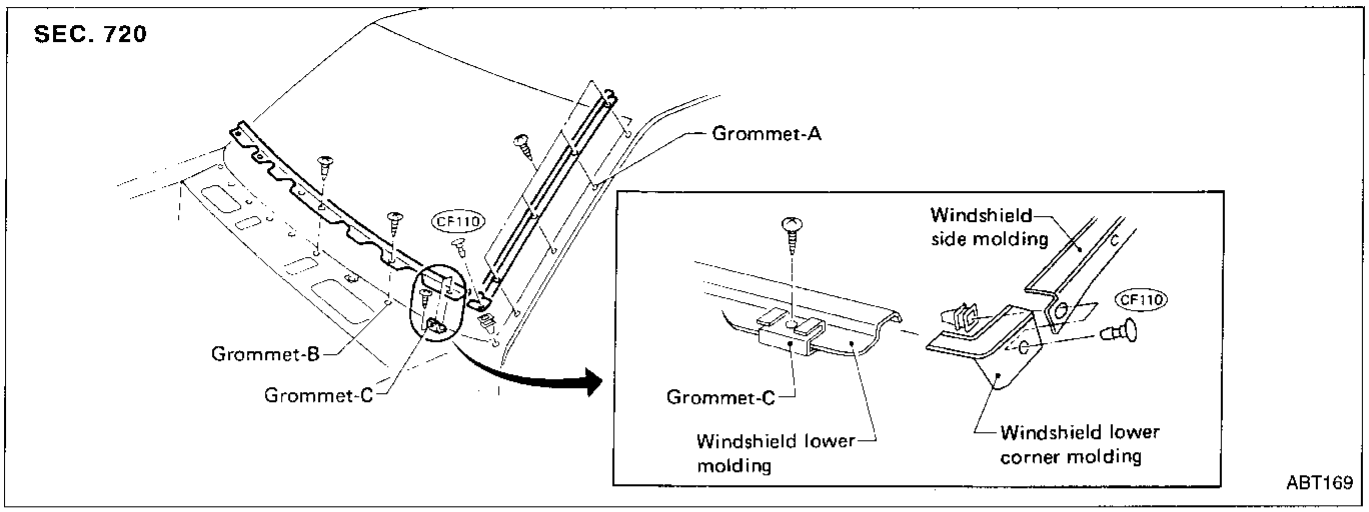

⑥ Drip weatherstrip

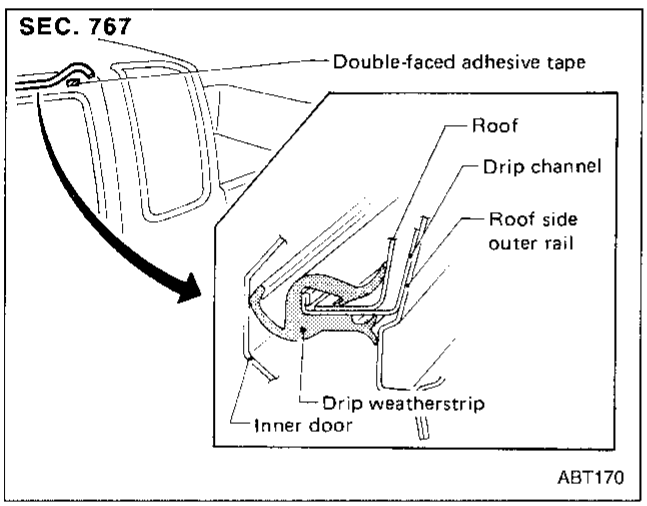

⑦ Body side welt

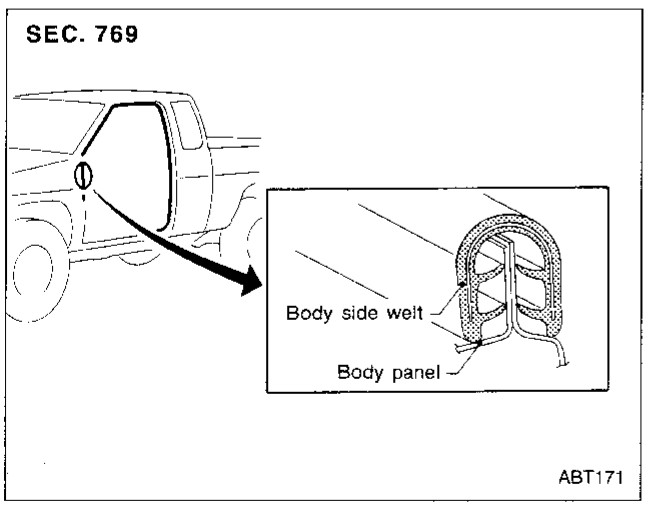

⑧ Door weatherstrip

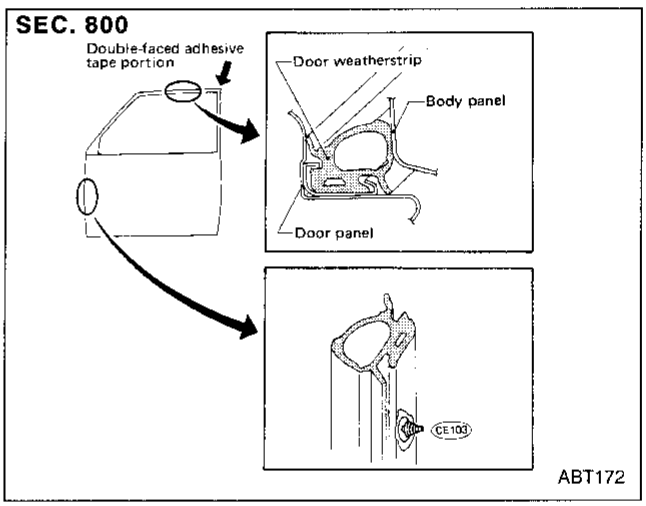

⑨ Door corner cover

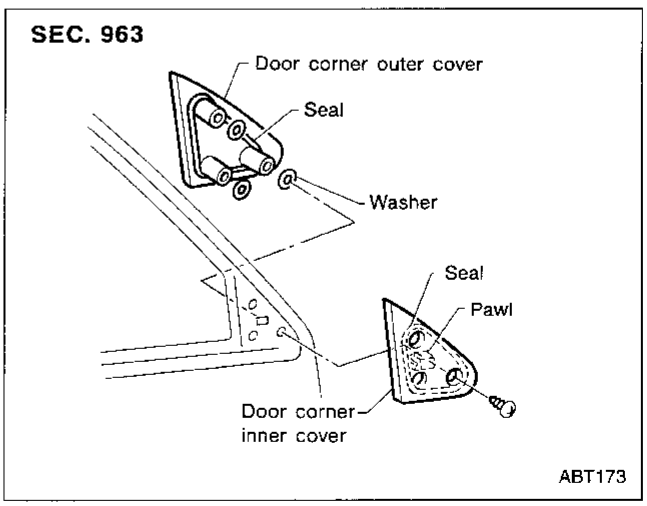

⑩ Door waist inner seal

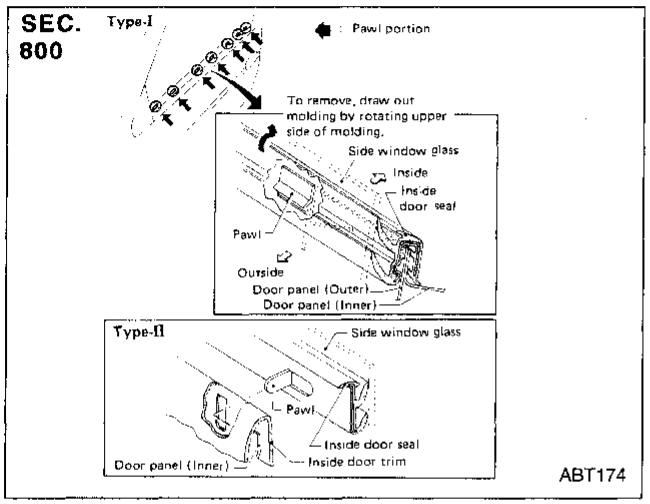

⑪ Door waist outer seal

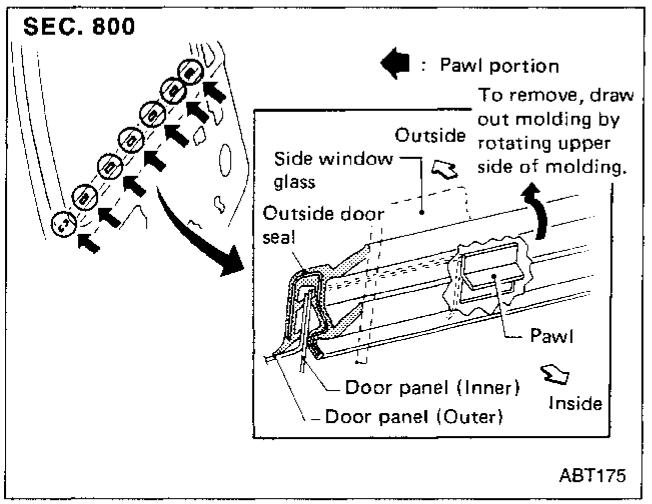

⑫ Drafter duct

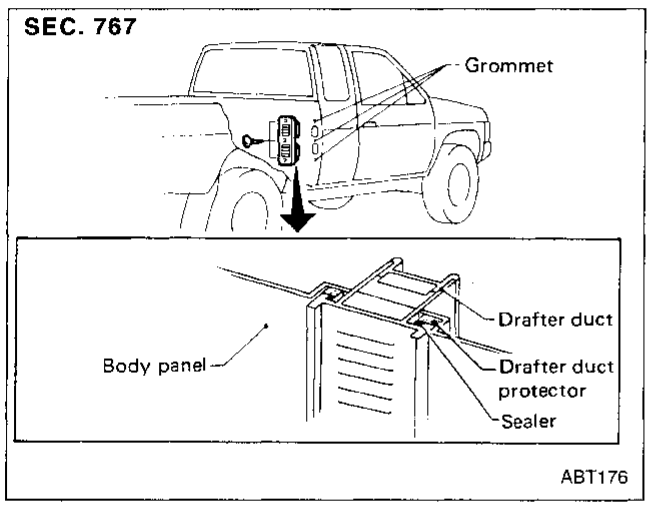

⑬ Back window

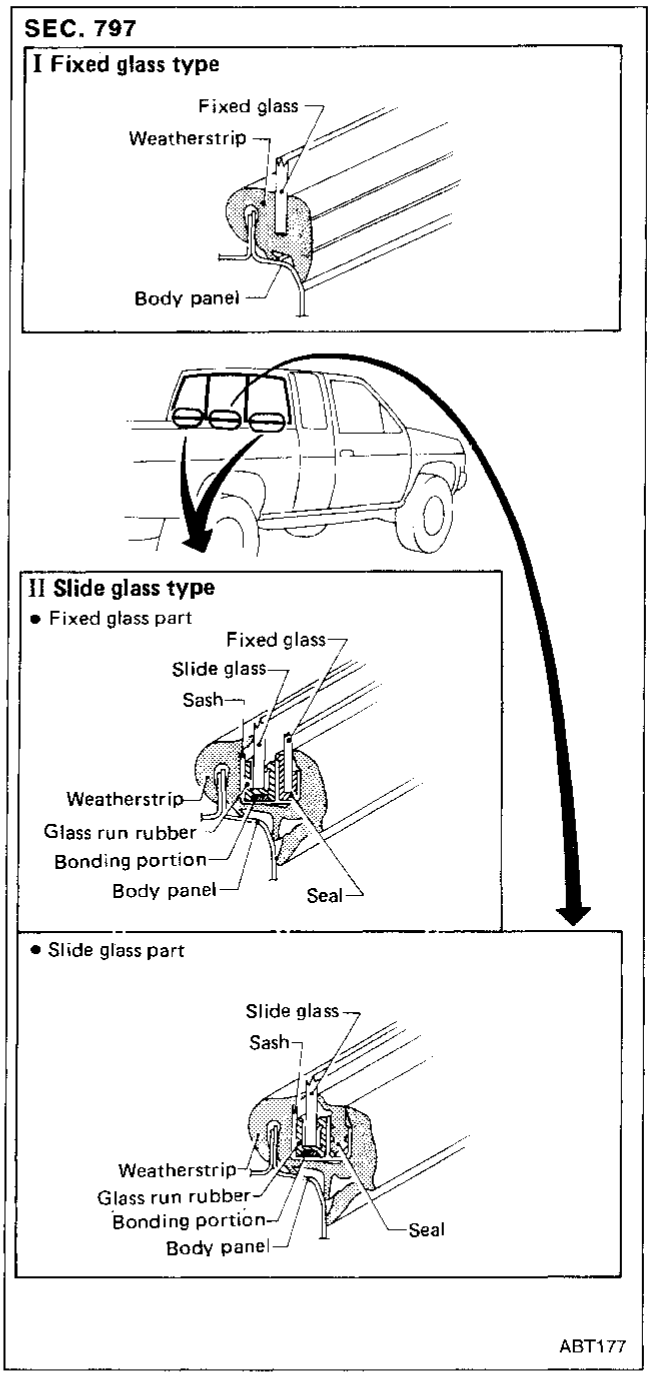

⑭ ⑮ Rear side window weatherstrip and rear side window protector

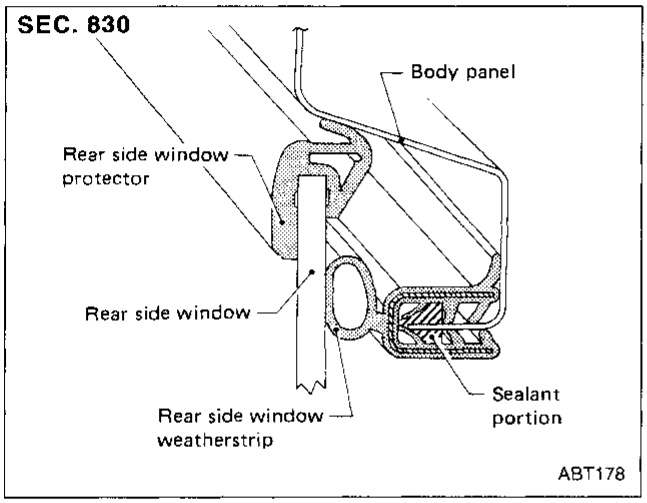

⑯ ⑰ Sunroof weatherstrip and lid protector

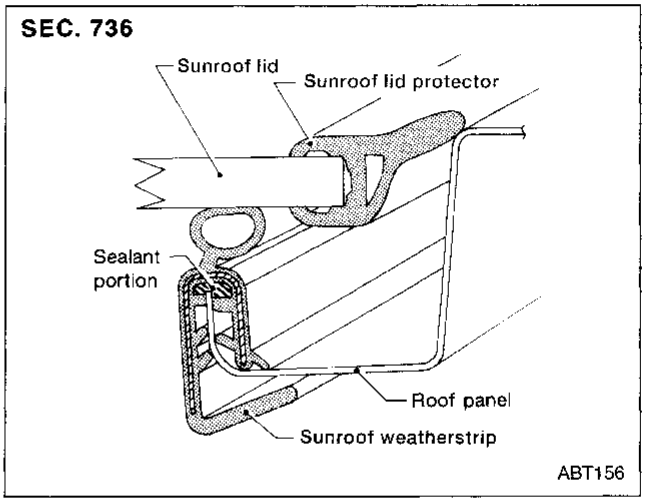

⑱ High-mounted stop lamp

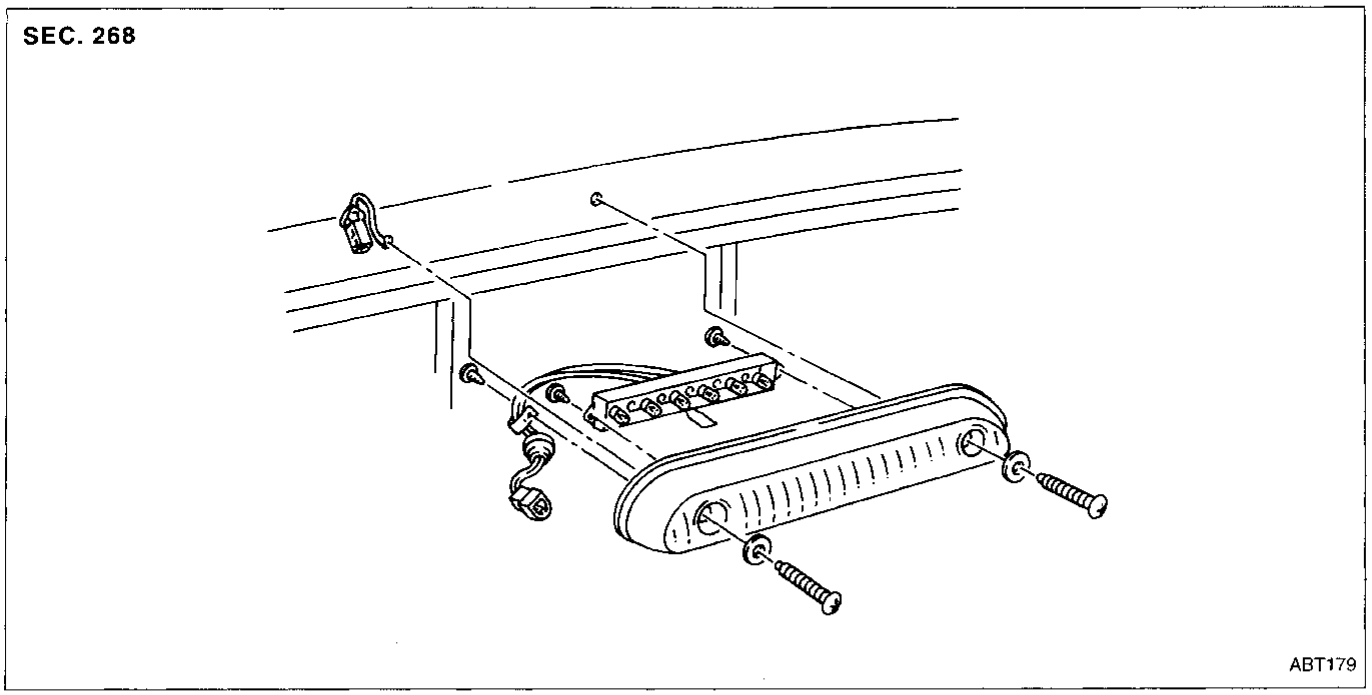

⑲ ⑳ Fender protector and mudguard

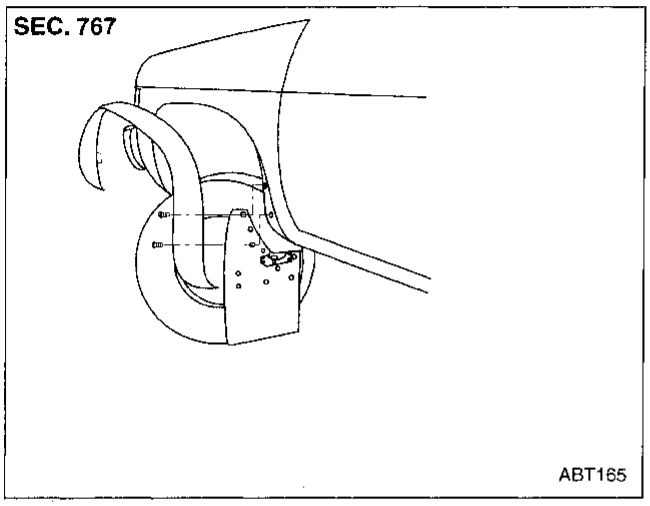

㉑ Step bumper cover

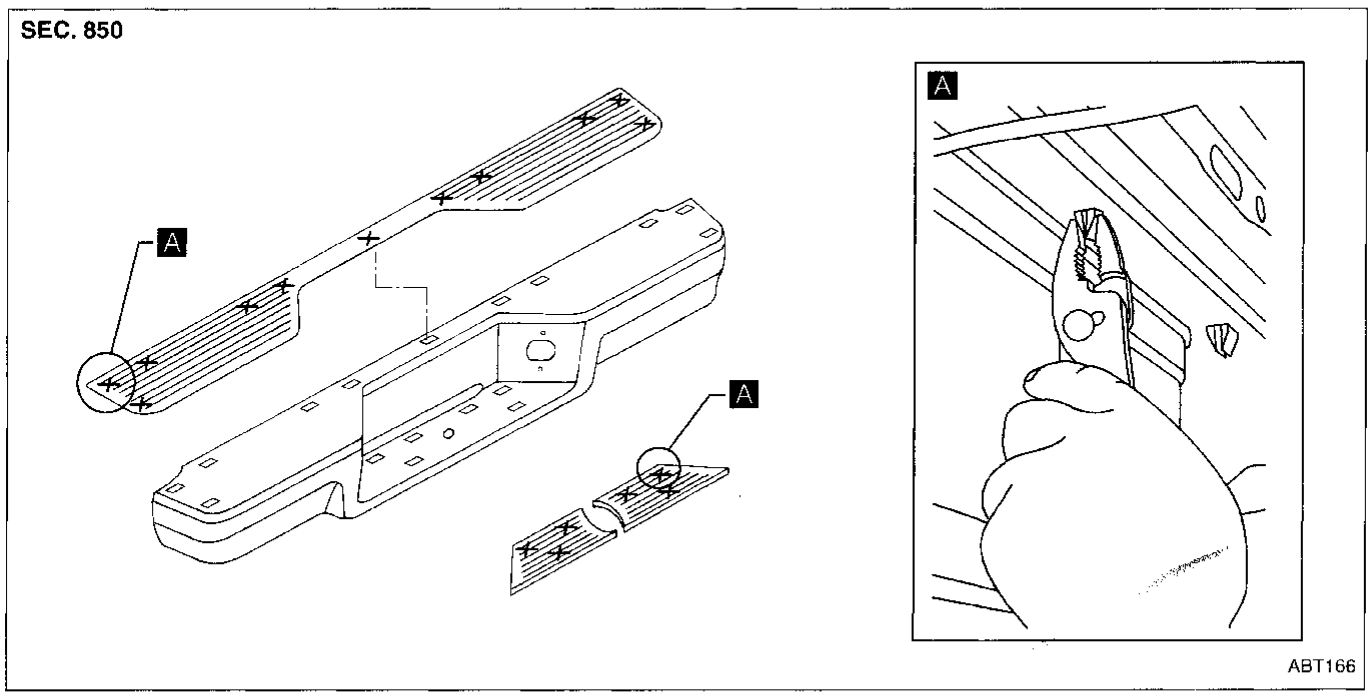

- When removing or installing the seat trim, carefully handle it to keep dirt out and avoid damage.

Front Seat

BUCKET SEAT

SEC. 870

Type-I

Type-II

Head rest holder
- Remove holder after rolling up seat back trim.

21 - 26 (2.1 - 2.7, 15 - 20)

43 - 55 (4.4 - 5.6, 32 - 41)

43 - 55 (4.4 - 5.6, 32 - 41)

21 - 26 (2.1 - 2.7, 15 - 20)

21 - 26 (2.1 - 2.7, 15 - 20)

21 - 26 (2.1 - 2.7, 15 - 20)

Walk-in mechanism

- The walk-in system is non-adjustable.

Walk-in wire

Release wire

: N·m (kg-m, ft-lb)

: Grease-up point
(Do not apply too much grease as it will drip.)

ABT180

Front Seat (Cont'd)

BENCH SEAT

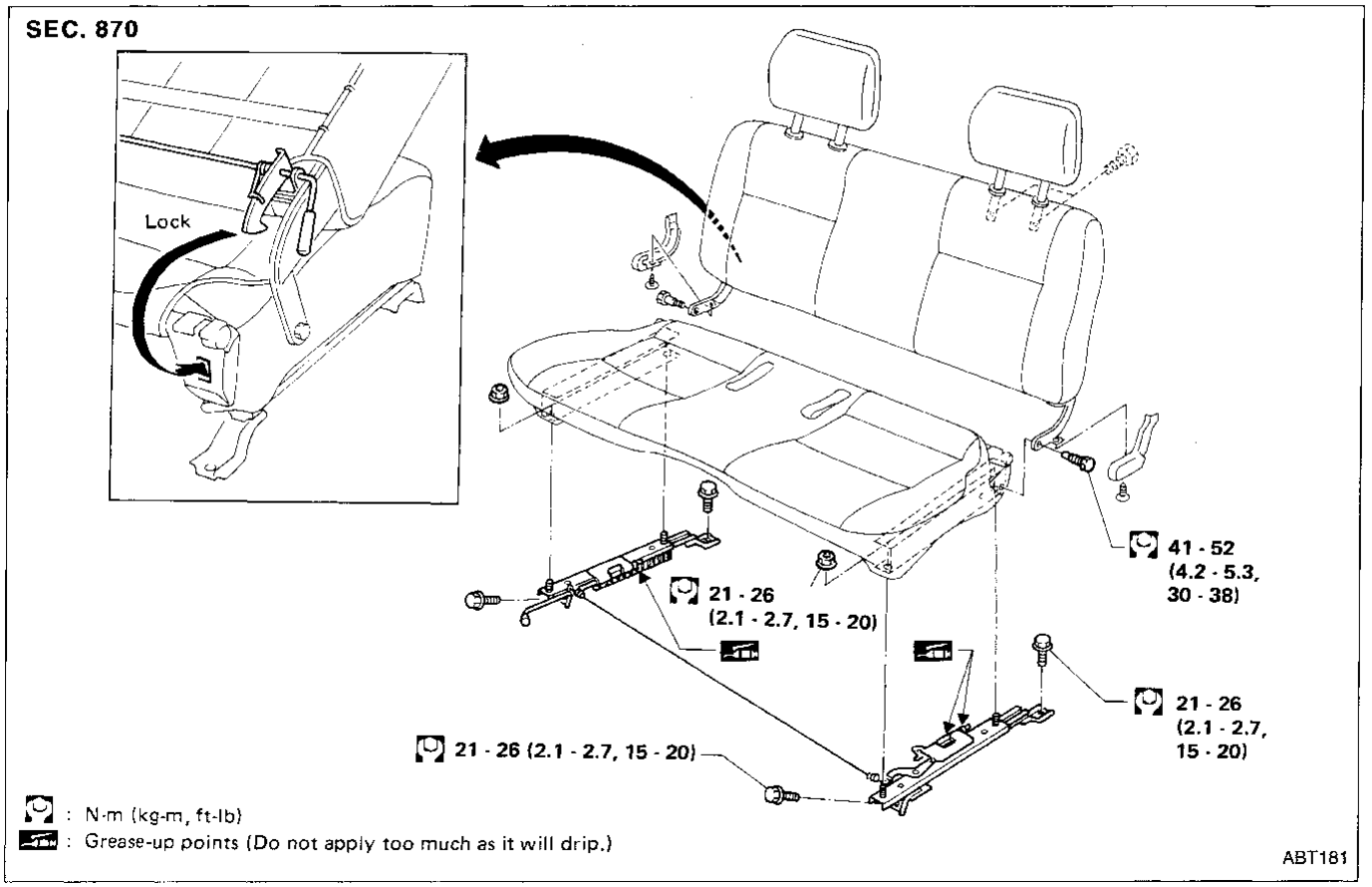

Jump Seat — King Cab Model

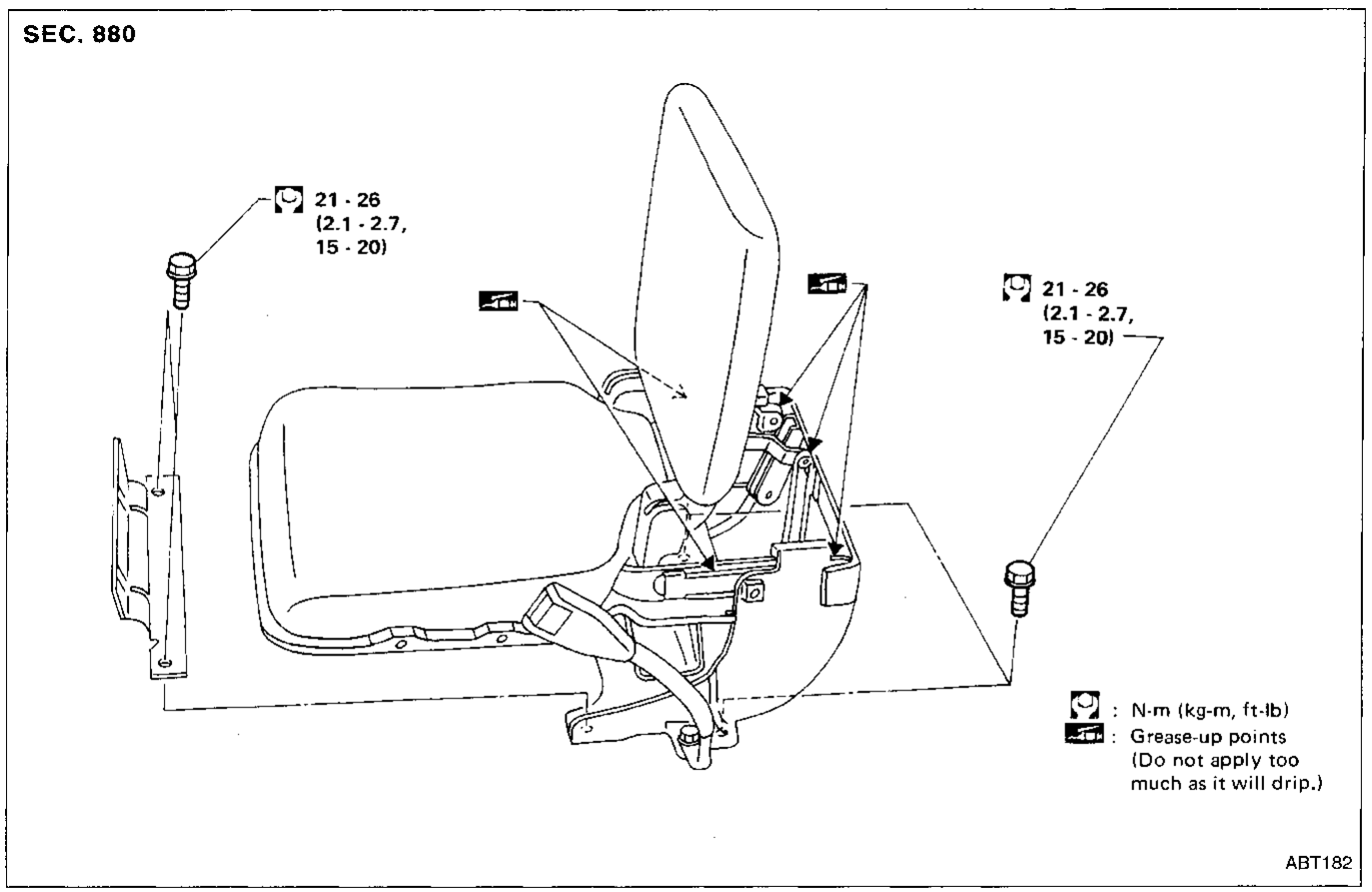

Service Procedure

SEC. 736

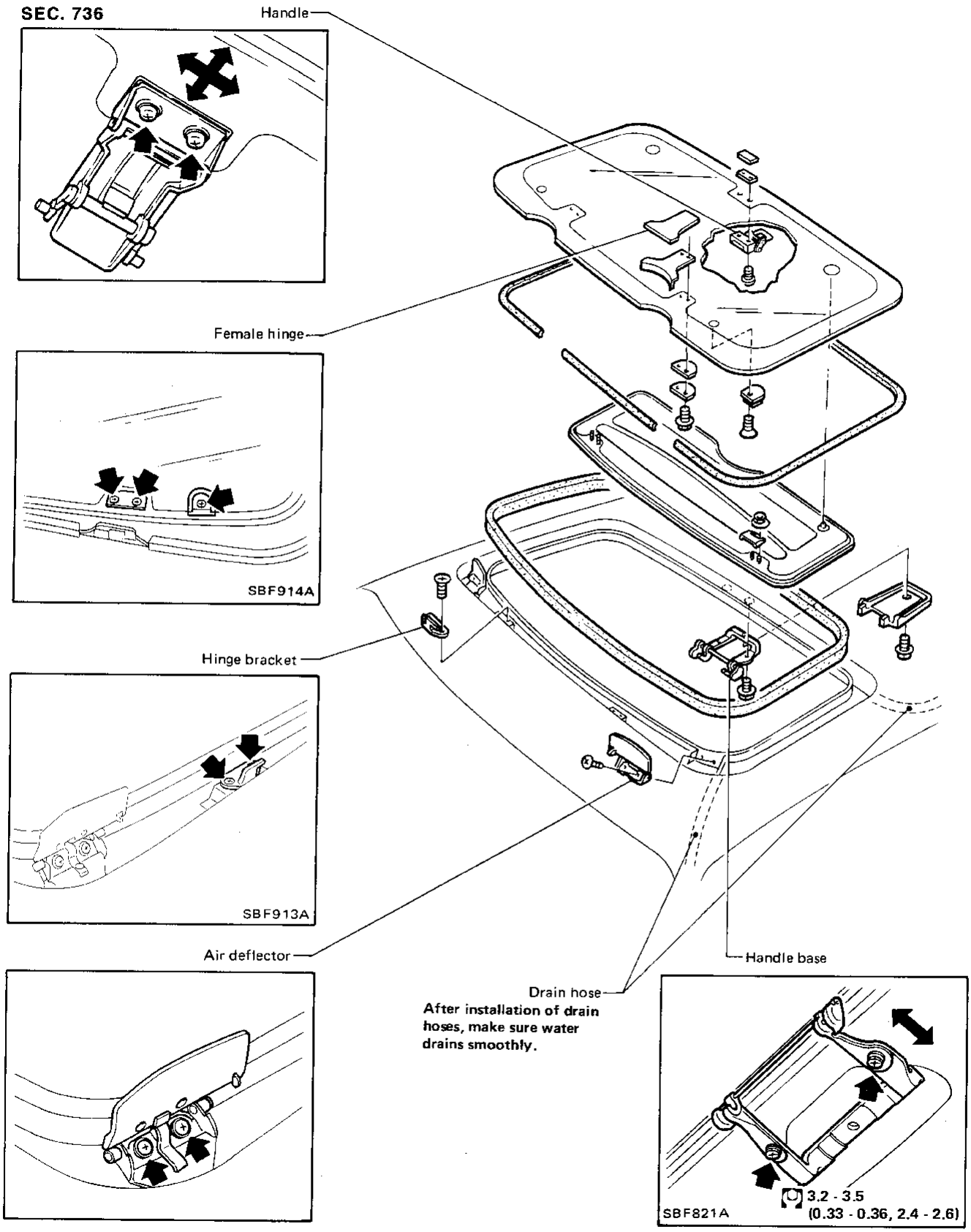

ABT183

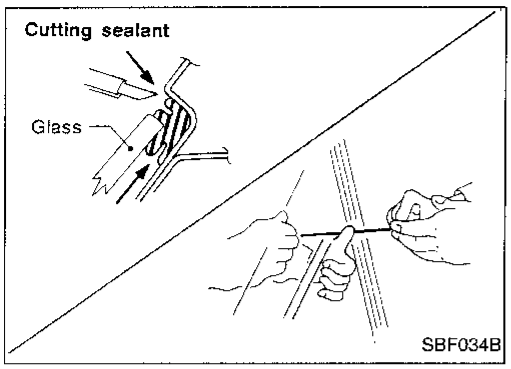

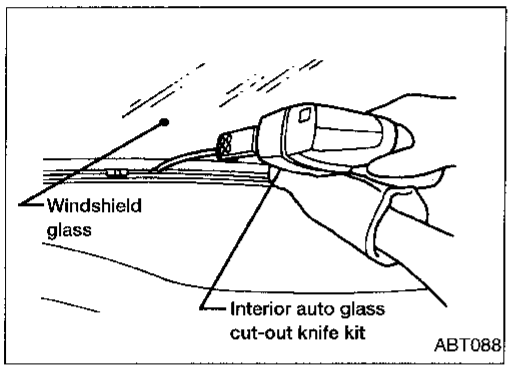

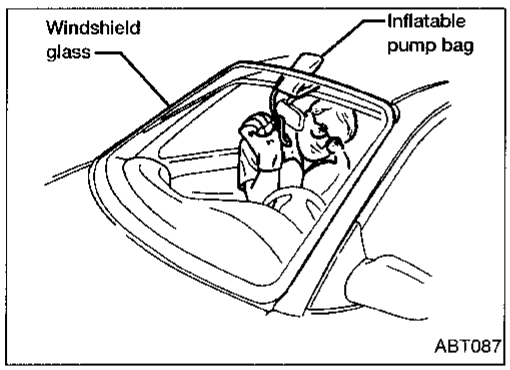

REMOVAL

After removing moldings, remove glass using piano wire or power cutting tool and an inflatable pump bag.

CAUTION:

Be careful not to scratch glass when removing.

INSTALLATION

- **Use genuine Nissan Sealant kit or equivalent. Follow instructions furnished with it.**
- **After installation, the vehicle should remain stationary until the sealant hardens.**

WARNING:

Keep heat and open flames away as primers are flammable.

CAUTION:

Advise the user not to drive the vehicle on rough roads or surfaces for 24 hours after installation.

- **Do not use sealant which is past its usable term.**
- **Do not leave cartridge unattended with its cap open.**
- **Keep primers and sealant in a cool, dry place. Ideally, they should be stored in a refrigerator.**
- **Molding must be installed securely so that it is in position and leaves no gap.**

Windshield

Body side

SEC. 720

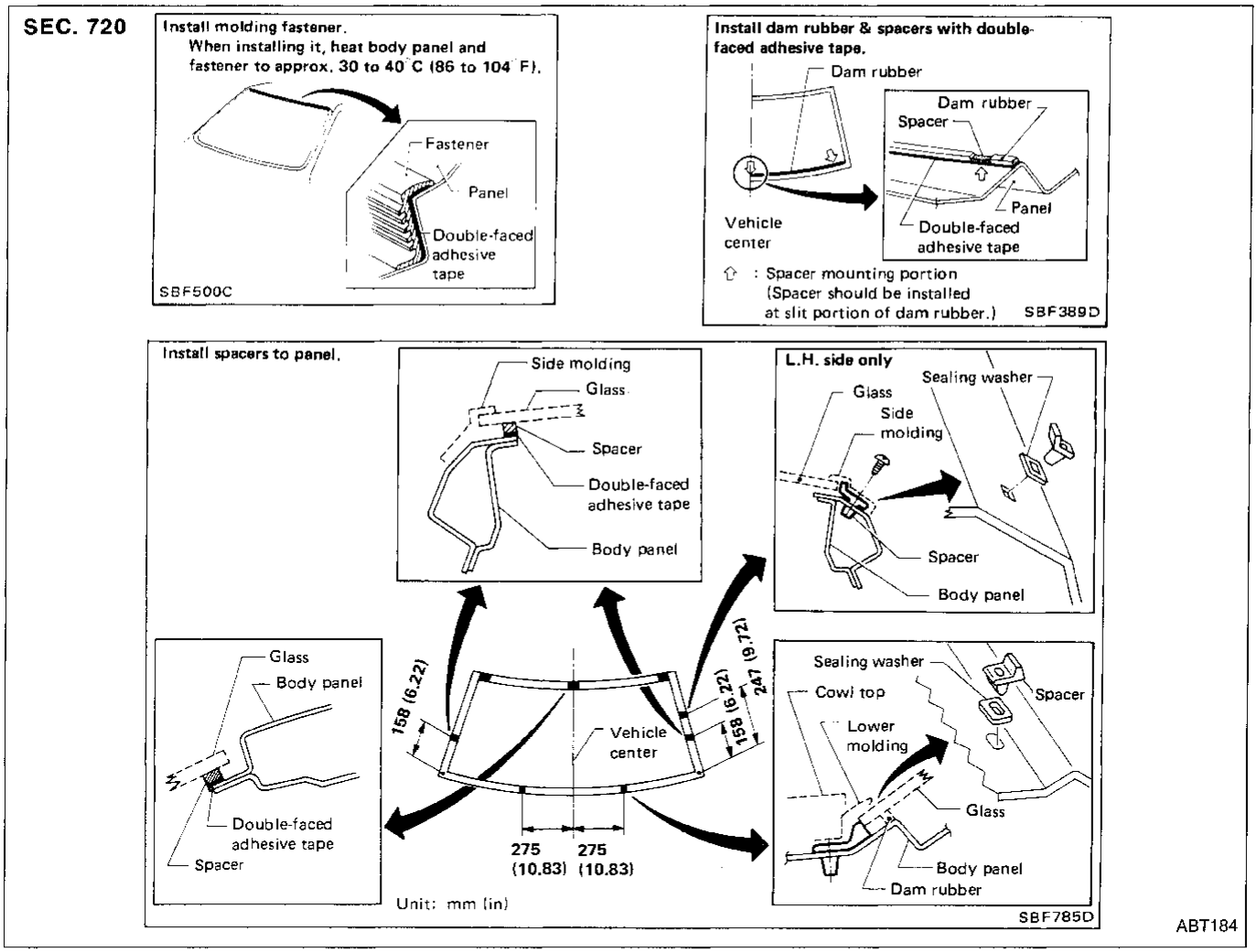

Sealant application areas

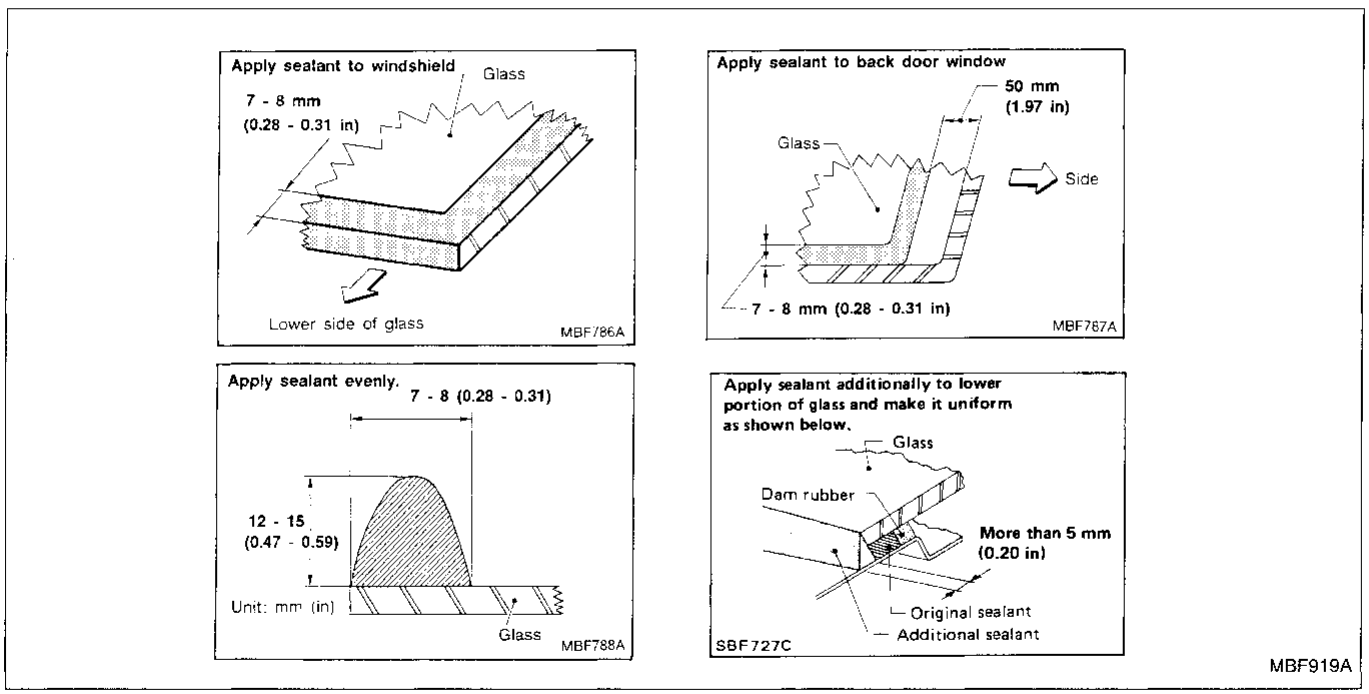

Windshield (Cont'd)

REPAIRING WATER LEAKS FOR WINDSHIELD

Leaks can be repaired without removing and reinstalling glass.

If water is leaking between caulking material and body or glass, determine the extent of the leak. This can be done by applying water while pushing glass outward.

To stop the leak, apply primer (if necessary) and then sealant to the leak point.

Back Window

- Window glass is held in place by weatherstripping. For details regarding weatherstrip, refer to "EXTERIOR", BT-17.
- Using sealant, fill gaps between vehicle body and weatherstrip as necessary.

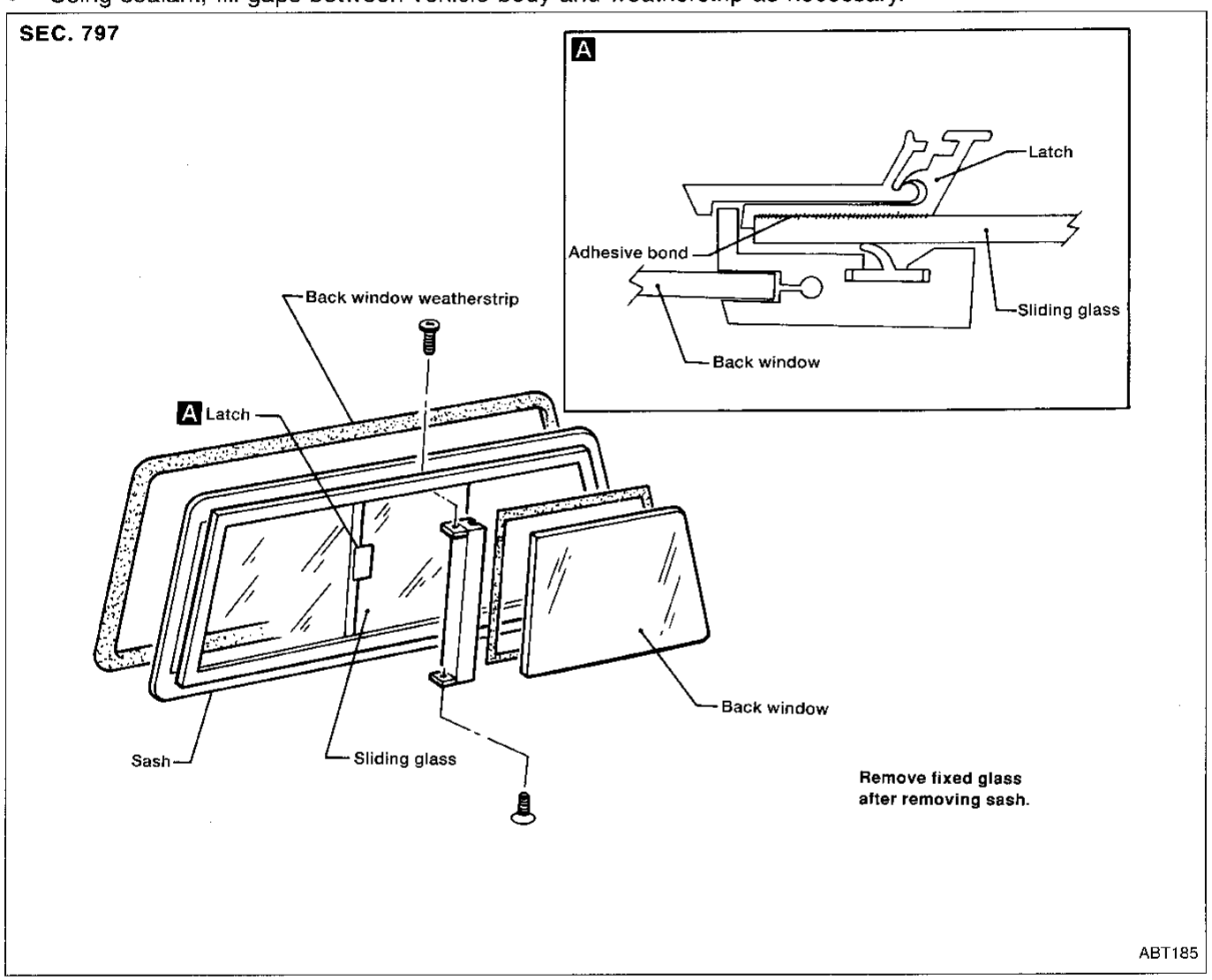

Rear Side Window

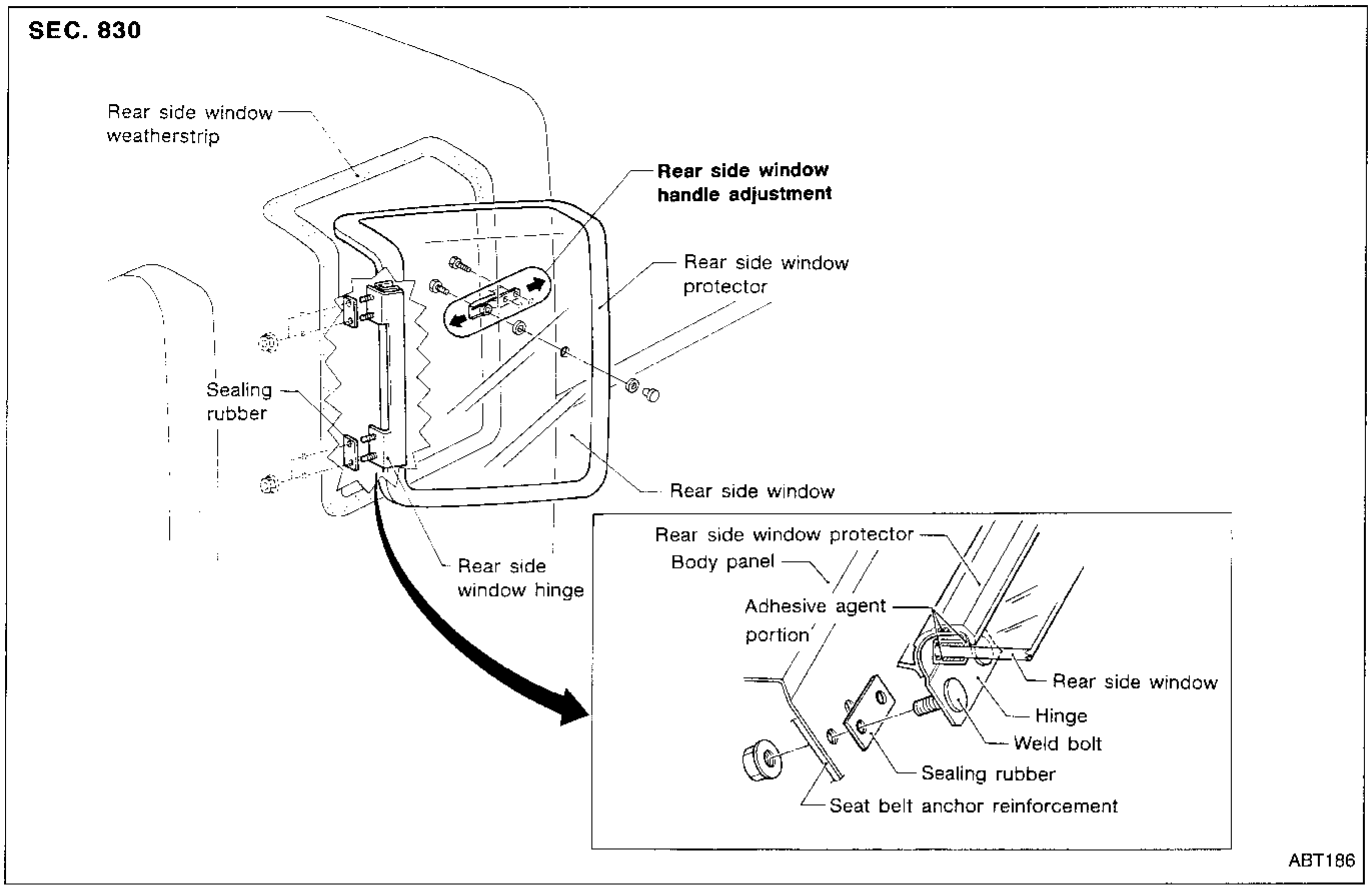

Door Mirror

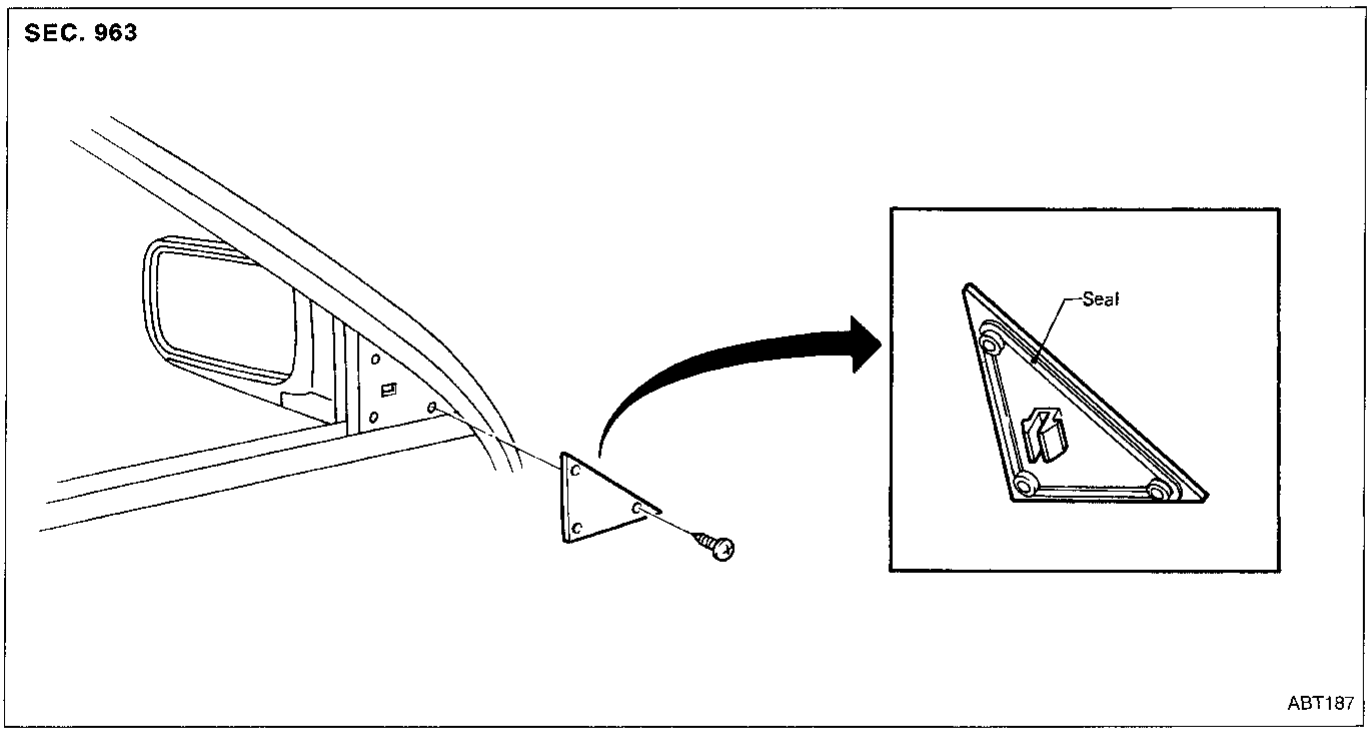

★ For Wiring Diagram, refer to "MIRROR" in EL section.

Rearview Mirror

REMOVAL

Remove rearview mirror by deflecting spring with screwdriver as shown in the figure.

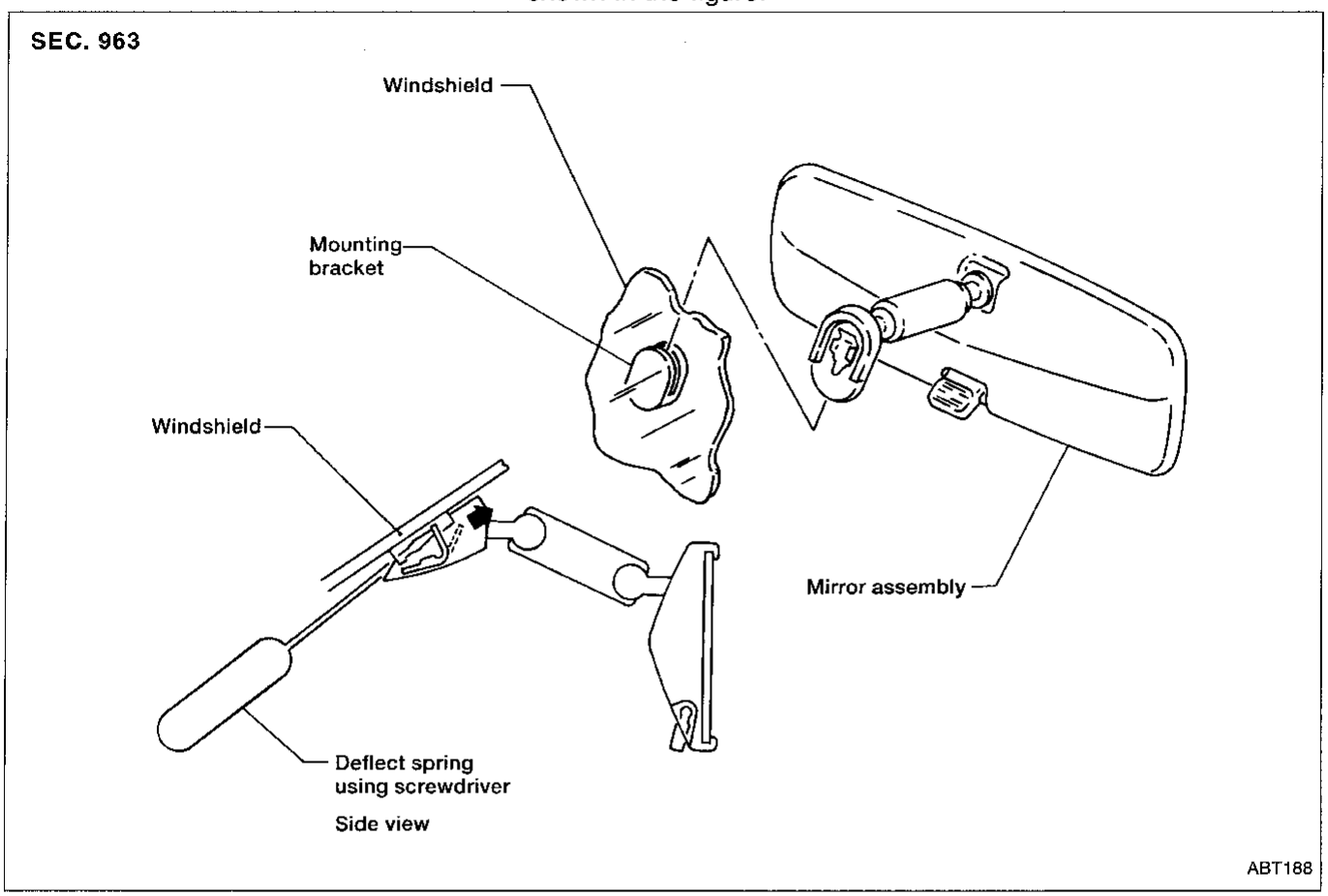

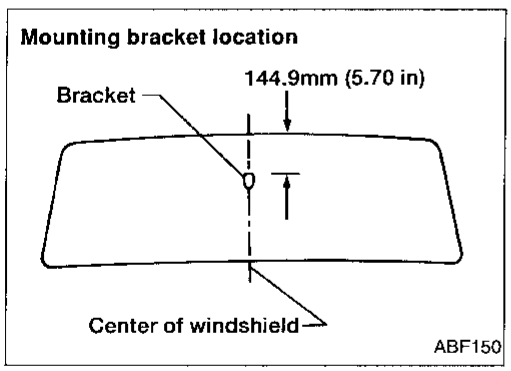

INSTALLATION

1. Install mounting bracket as follows:
   a. Determine mounting bracket position on windshield by measuring from top of windshield to top of mounting bracket as shown in the figure.
   b. Mark location on outside of windshield with wax pencil or equivalent.
   c. Clean attaching point on inside of windshield with an alcohol-saturated paper towel.
   d. Sand bonding surface of mounting bracket with sandpaper (No. 320 or No. 360).
   e. Clean bonding surface of mounting bracket with an alcohol-saturated paper towel.
   f. Apply Loctite Adhesive 11067-2 or equivalent to bonding surface of mounting bracket.
   g. Install mounting bracket at premarked position and press mounting bracket against glass for 30 to 60 seconds.
   h. After five minutes, wipe off excess adhesive with an alcohol-moistened paper towel.
2. Install rearview mirror.

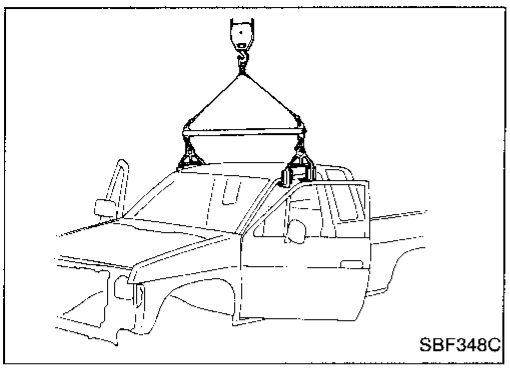

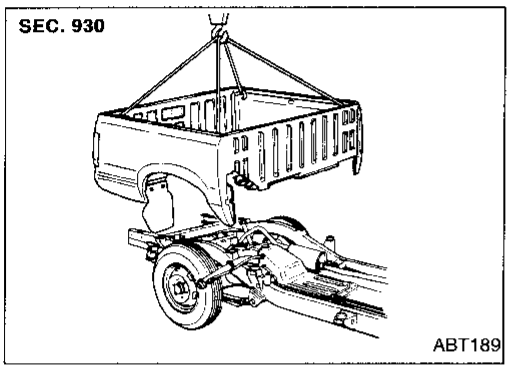

Removal

CAB BODY

- Remove the following parts in engine compartment at least.

(1) Main harness and other wiring harnesses

- Disconnect brake and clutch lines in engine compartment.
- Remove the following parts from underbody at least.

(1) Transmission and transfer control levers
(2) Parking brake control lever and cables
(3) Main harness and other wiring harnesses

REAR BODY

- Remove the following parts at least.

(1) Rear combination lamp and license plate lamp harness
(2) Fuel filler tube fixing screws

Body Mounting

When installing, be sure to use new bolts and nuts (sealant applied bolts or self-lock nuts are used for all mounting).

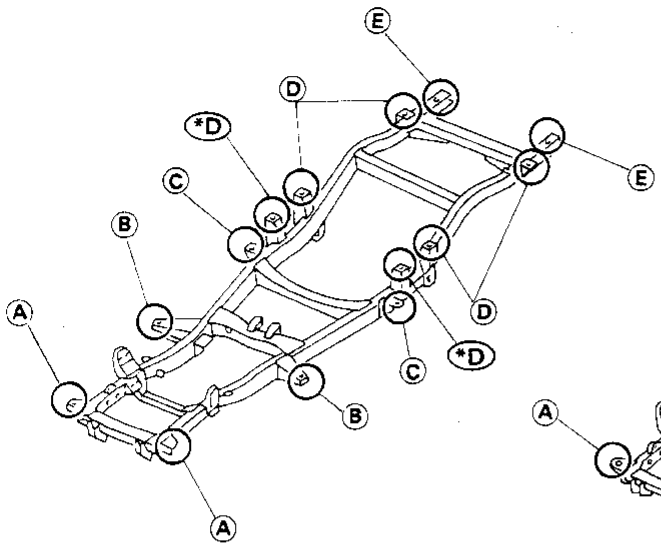

Regular Cab model

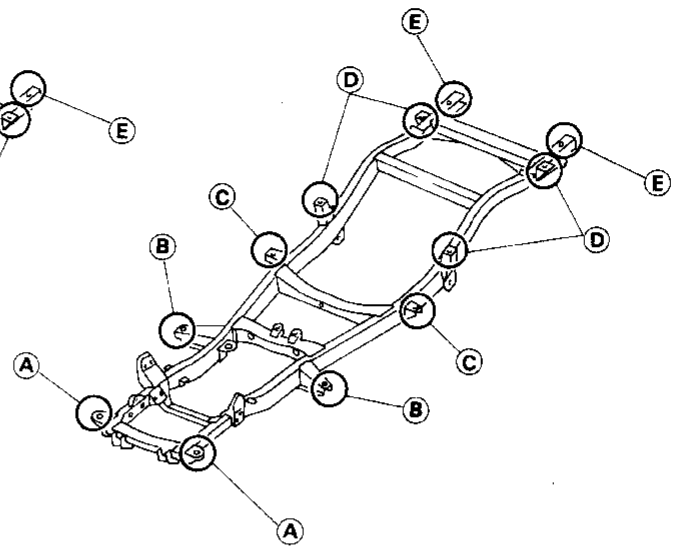

King Cab model

(*D) : Except for short wheelbase model (This bracket is not used for body mounting.)

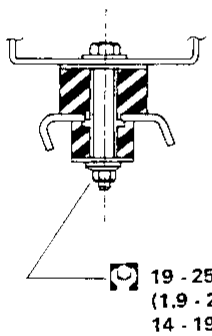

Section (A)

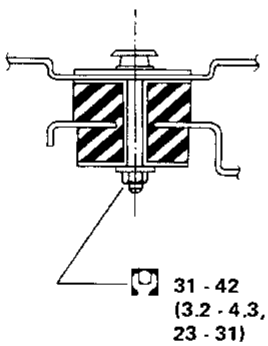

Section (B)

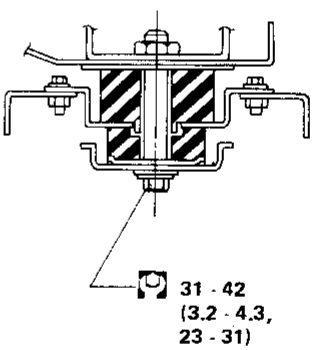

Section (C)

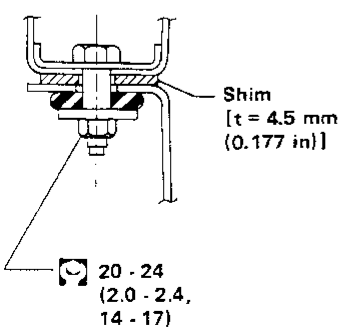

Section (D)

2WD

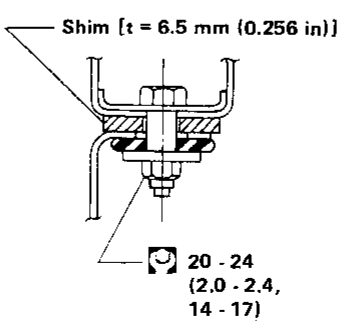

4WD

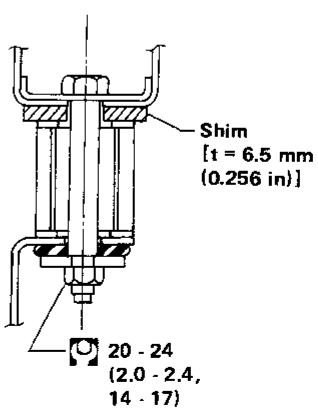

Section (E)

: N·m (kg-m, ft-lb)

SBF350C

- All dimensions indicated in figures are actual ones.
- When using a tracking gauge, adjust both pointers to equal length. Make sure there is no free play.
- When a measuring tape is used, check to be sure there is no elongation, twisting or bending.
- Measurements should be taken at the center of the mounting holes.
- All measurements and mounting hole diameters are expressed in millimeters (mm).
- An asterisk (*) following the value at the measuring point indicates that the measuring point on the other side is symmetrically the same value.
- The coordinates of the measurement points are the distances measured from the respective dimension lines in the directions of "x", "y" and "z".
  Dimension lines: "x" line — Center line of vehicle
  "y" line — Center line of front axle (Any measurement point in front of the dimension line refers to a minus "—" value.)
  "z" line — Datum line (Any measurement point under the dimension line refers to a minus "—" value.)

2W	: 2WD	2W.SB	: Short wheelbase (2WD)
4W	: 4WD	2W.LB	: Long wheelbase (2WD)
SB	: Short wheelbase	4W.SB	: Short wheelbase (4WD)
LB	: Long wheelbase	4W.LB	: Long wheelbase (4WD)
R	: Regular Cab		
K	: King Cab		

Engine Compartment

MEASUREMENT

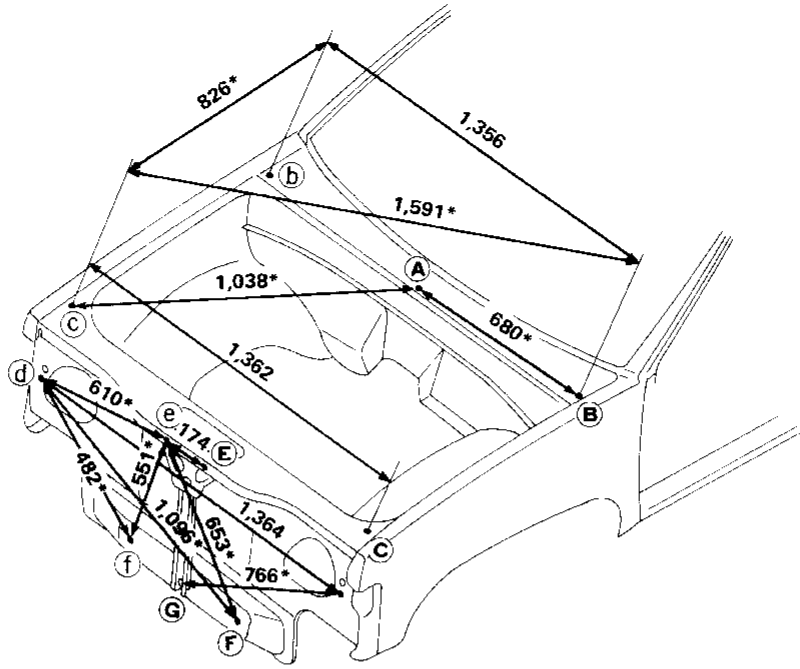

Unit: mm

DETAILED MEASUREMENT POINTS

Unit: mm

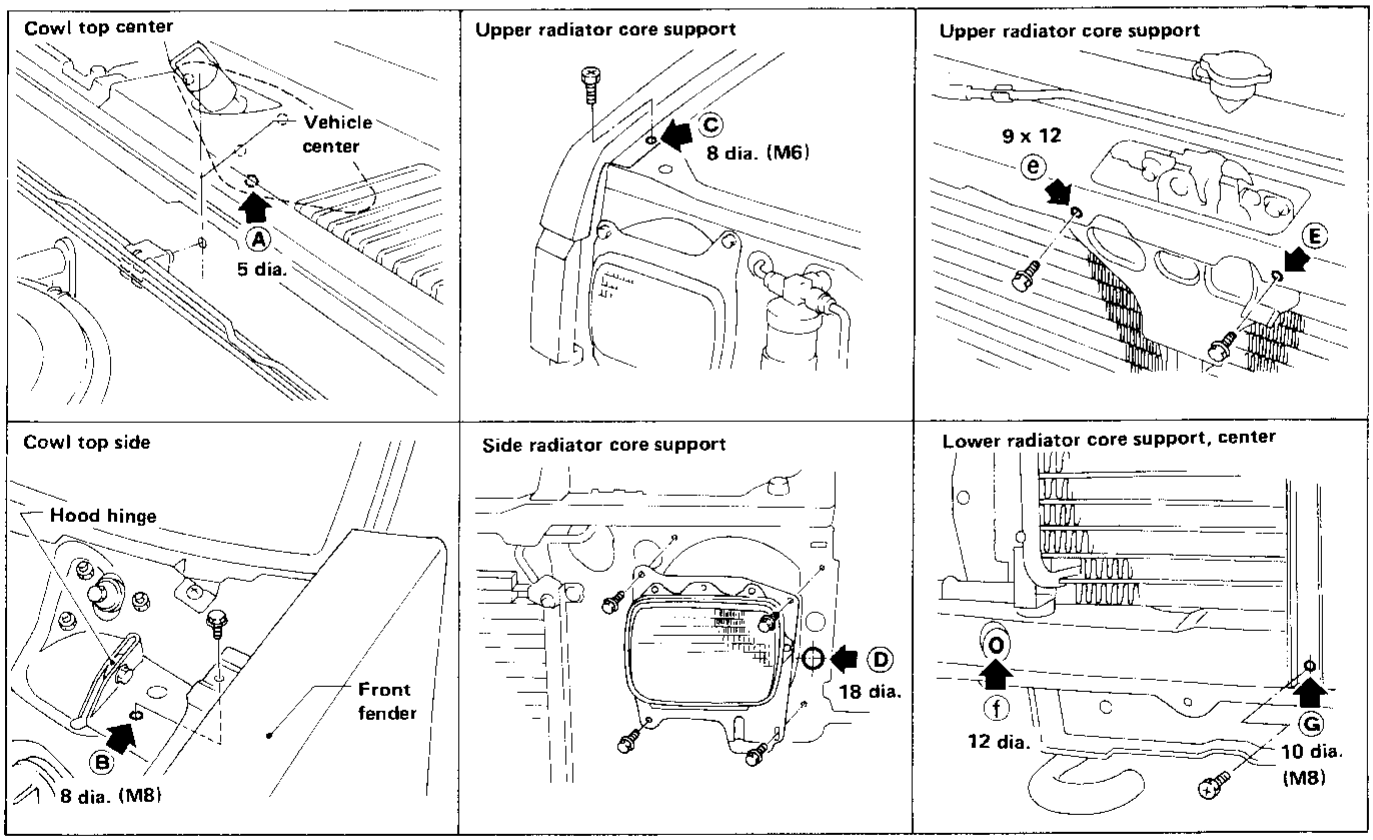

MBF726A

Underbody

MEASUREMENT POINTS

2WD models

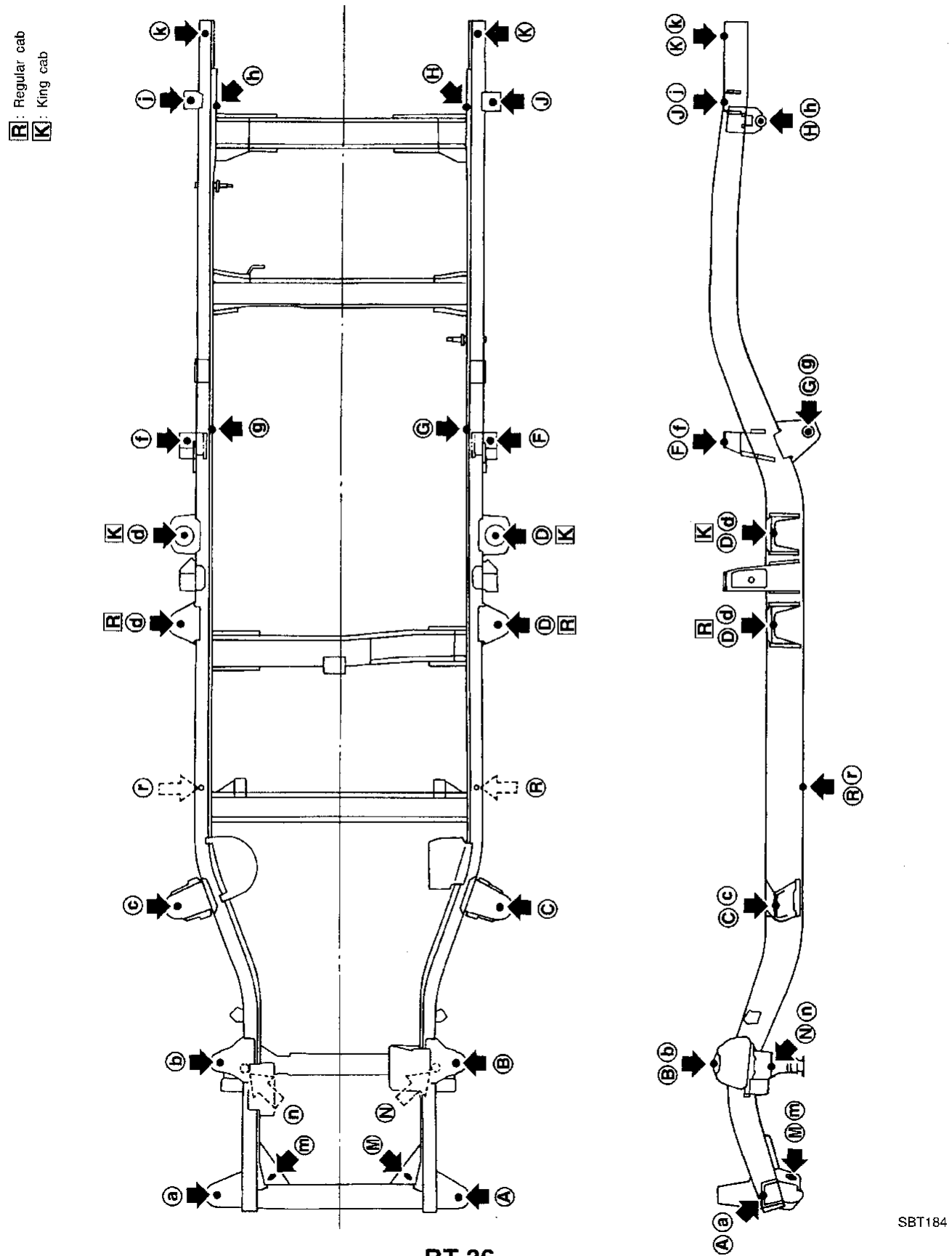

MEASUREMENT POINTS

4WD models

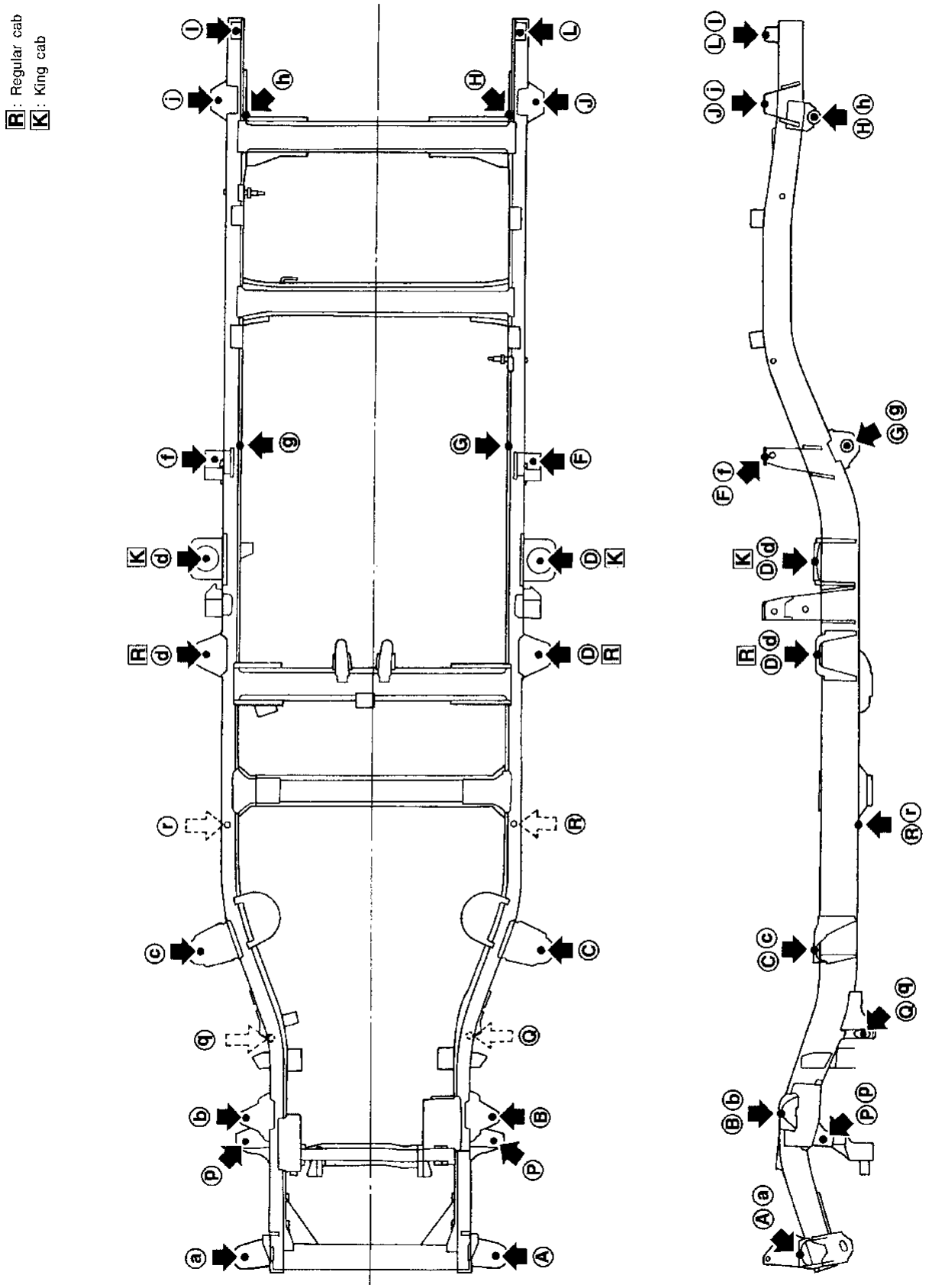

SBT185

MEASUREMENT

2WD models

Regular Cab

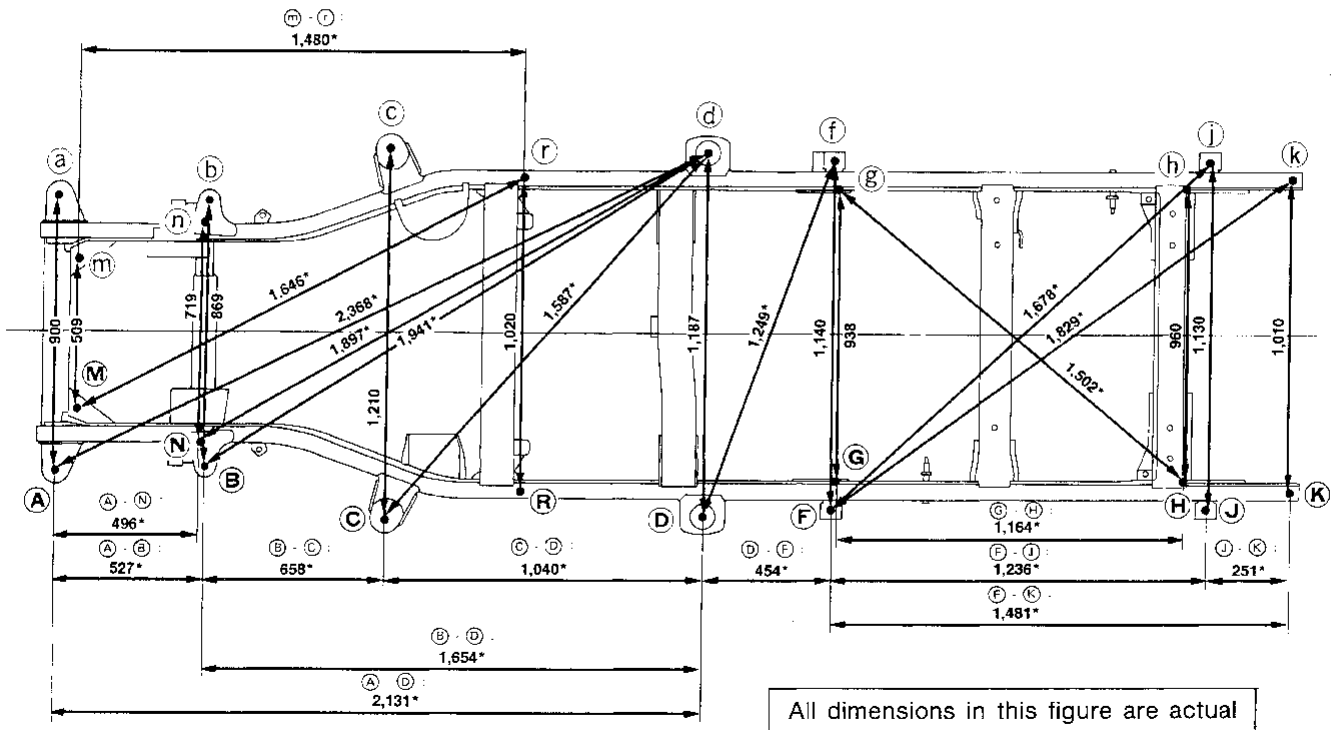

All dimensions in this figure are actual ones.
There are no projected dimensions.

Unit: mm

MBF824AA

King Cab

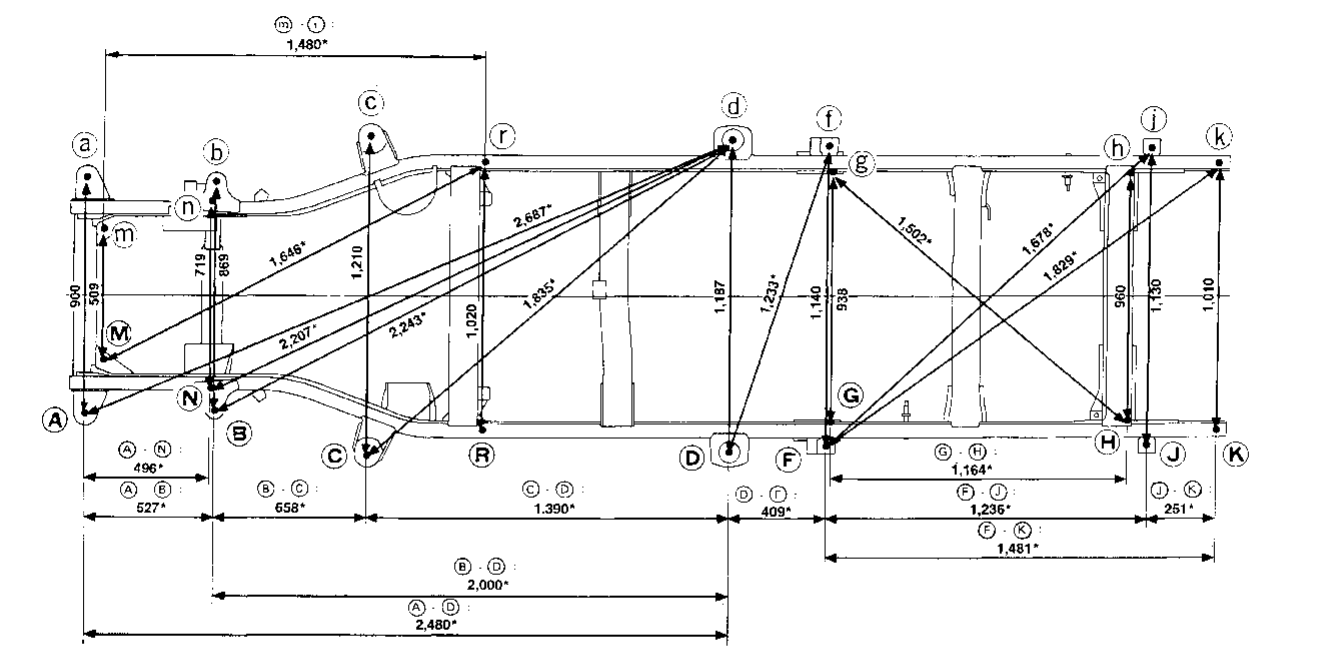

All dimensions in this figure are actual ones.
There are no projected dimensions.

Unit: mm

MBF826A

Underbody (Cont'd)

4WD models

Regular Cab

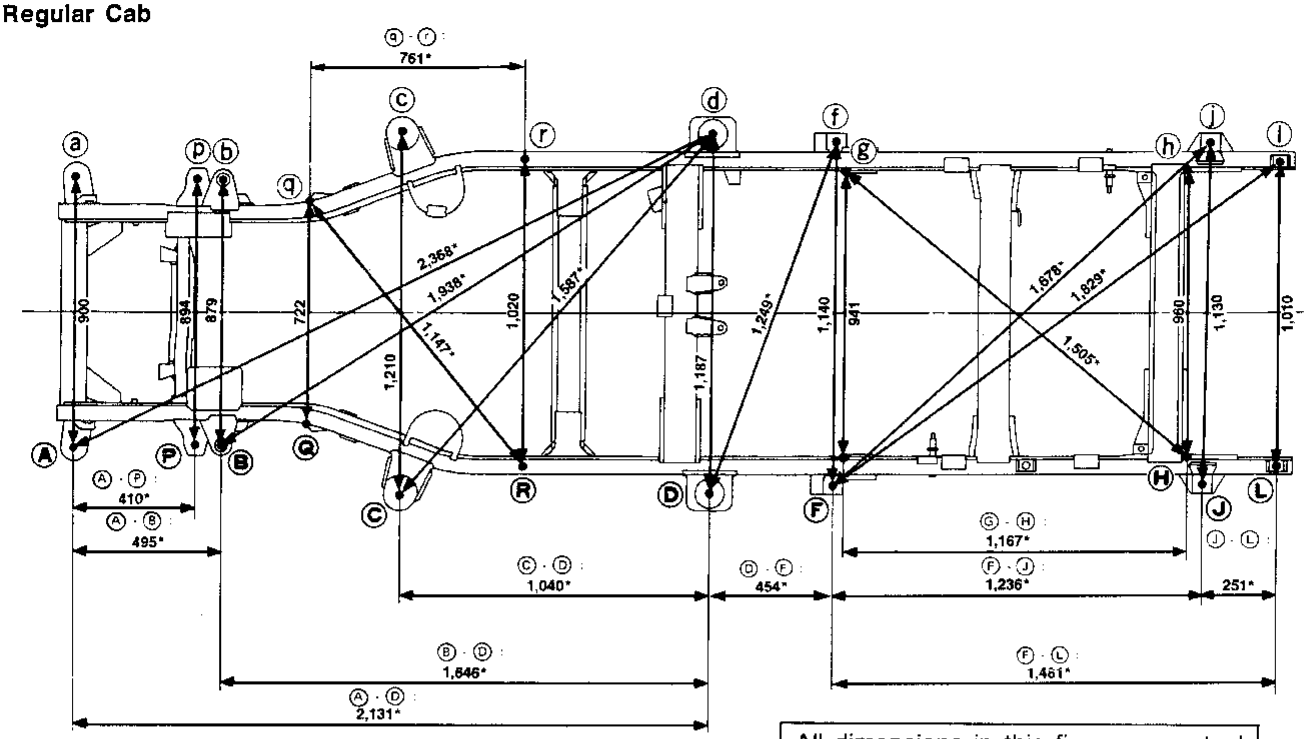

All dimensions in this figure are actual ones.
There are no projected dimensions.

Unit: mm

MBF827AA

King Cab

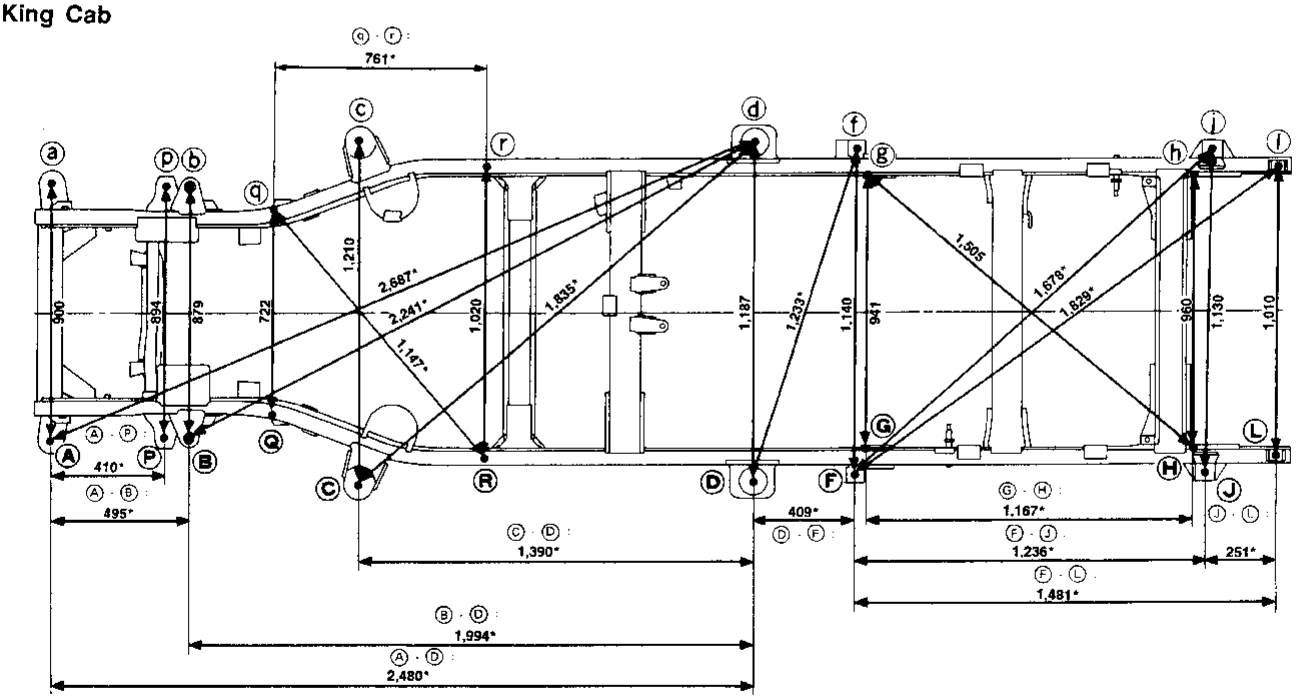

All dimensions in this figure are actual ones.
There are no projected dimensions.

Unit: mm

MBF829A

DETAILED MEASUREMENT POINTS

Points	Hole dia. mm	Detailed points		Coordinates mm "x"	"y"	"z"
Ⓐ ⓐ	24	Center of hole on top of bracket 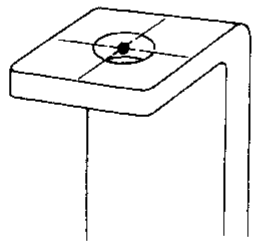 SBF274B	Cab body or rear body mounting insulator mounting hole	450.0	–488.5	2W: 21.2 4W: 71.2
Ⓒ ⓒ	28			605.0	597.5	2W: –28.2 4W: 21.8
Ⓓ ⓓ	85			593.5	R: 1,637.0 K: 1,987.0	2W: –15.0 4W: 35.0
Ⓕ ⓕ	18			570.0	SB: 2,050.0 LB: 2,350.0	2W: 171.8 4W: 221.8
Ⓙ ⓙ	18		Cab body or rear body mounting insulator mounting hole	565.0	SB: 3,286.0 LB: 3,586.0	2W: 171.8 4W: 221.8
Ⓛ ⓘ	22			505.0	SB: 3,530.0 LB: 3,830.0	220.0
Ⓑ ⓑ	2W: 15 4W: 15.3	2WD Ⓑ 4WD Ⓑ 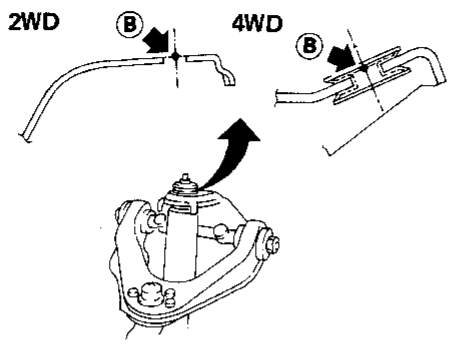 SBF668C	Hole for front shock absorber mounting at the bracket	2W: 434.7 4W: 439.7	2W: 5.6 4W: 1.4	2W: 203.2 4W: 142.0
Ⓖ ⓖ	12	Front Front mounting bracket Inner side ⓖ 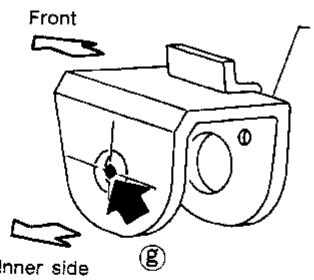 SBF795G	Hole for rear spring front mounting at the bracket	2W: 469.0 4W: 470.5	2W.SB: 2,059.0 2W.LB: 2,359.0 4W.SB: 2,080.0 4W.LB: 2,380.0	2W: –152.0 4W: –86.0

Underbody (Cont'd)

Points	Hole dia. mm	Detailed points		Coordinates mm "x"	"y"	"z"
Ⓗ ⓗ	33	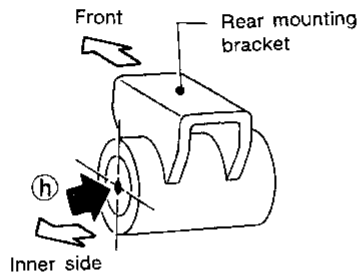 SBF796G	Hole for rear spring rear mounting at the bracket	480.0	2W.SB: 3,209.0 2W.LB: 3,509.0 4W.SB: 3,240.0 4W.LB: 3,540.0	2W: 30.0 4W: 43.0
Ⓚ ⓚ	22	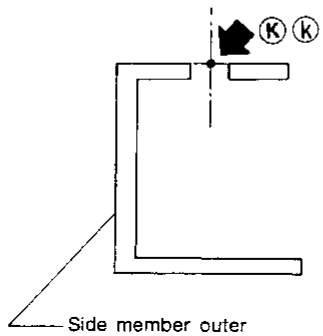 SBF797G	Hole for body mounting at rear of side member outer	505.0	SB: 3,530.0 LB: 3,830.0	170.0
Ⓜ ⓜ	27	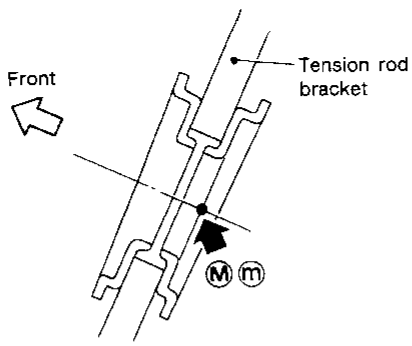 SBF798G	Hole for tension rod mounting at the bracket	254.6	–417.1	–92.3
Ⓝ ⓝ	9	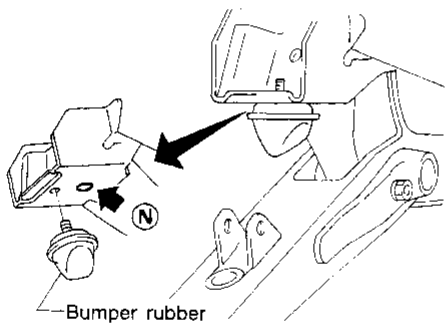 SBF799G	Hole for locating at bound bumper bracket	359.5	–3.2	–23.5

Underbody (Cont'd)

Points	Hole dia. mm	Detailed points		Coordinates mm		
				"x"	"y"	"z"
Ⓟ ⓟ	10.5	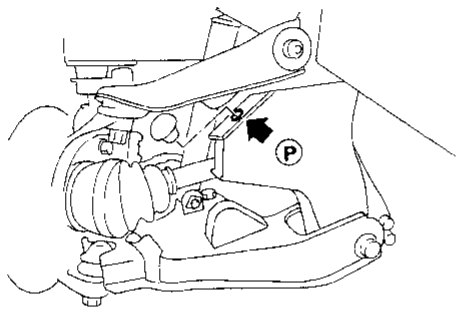 SBF800G	Hole for rebound bumper mounting at lower link bracket	447.0	–88.0	–14.9
Ⓠ ⓠ	27	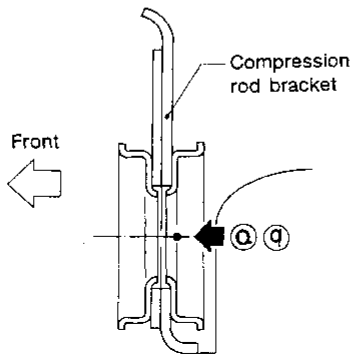 SBF801G	Hole for compression rod mounting at the bracket	361.1	294.5	–158.9
Ⓡ ⓡ	13	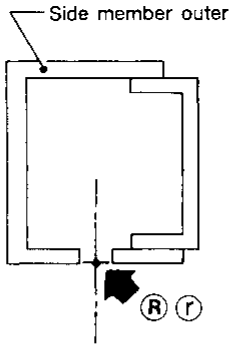 SBF802G	Hole for waxing at lower side of side member outer	510.0	1,040.0	–135.0

SECTION HA

CONTENTS

PRECAUTIONS AND PREPARATION 2
Precautions for Supplemental Restraint System (SRS) "AIR BAG" 2
Introduction 3
Precautions for Working with R-134a 4
General Refrigerant Precautions 4
Precautions for Refrigerant Connection 5
Precautions for Servicing Compressor 6
Special Service Tools 6
R-134a Service Tools and Equipment 7
Precautions for Service Equipment 9
DESCRIPTION 11
Refrigeration Cycle 11
Component Layout 12
Discharge Air Flow 13
Control Operation 14
TROUBLE DIAGNOSES 15
How to Perform Trouble Diagnoses for Quick and Accurate Repair 15
Operational Check 16
Symptom Chart 18
Preliminary Check 19
Performance Test Diagnoses 22
Performance Chart 24
Trouble Diagnoses for Abnormal Pressure 25
Harness Layout 28
Circuit Diagram 29
Wiring Diagram –HEATER– 30
Wiring Diagram –A/C– 31
Main Power Supply and Ground Circuit Check 33
Diagnostic Procedure 1 34
Electrical Components Inspection 41
Control Linkage Adjustment 42
SERVICE PROCEDURES 44
Checking Refrigerant Leaks 44
Refrigerant Lines 47
R-134a Service Procedure 48
Compressor Lubricant Quantity 50
Compressor Mounting 52
Belt Tension 52
Fast Idle Control Device (FICD) 52
Condenser 52
Compressor 53
Compressor Clutch 53
Thermal Protector 56
SERVICE DATA AND SPECIFICATIONS (SDS) 57
General Specifications 57
Inspection and Adjustment 57

When you read wiring diagrams:
- **Read GI section, "HOW TO READ WIRING DIAGRAMS".**
- **See EL section, "POWER SUPPLY ROUTING" for power distribution circuit.**

When you perform trouble diagnoses, read GI section, "HOW TO FOLLOW FLOW CHART IN TROUBLE DIAGNOSES" and "HOW TO PERFORM EFFICIENT DIAGNOSIS FOR AN ELECTRICAL INCIDENT".

Precautions for Supplemental Restraint System (SRS) "AIR BAG"

The Supplemental Restraint System "Air Bag", used along with a seat belt, helps to reduce the risk or severity of injury to the driver in a frontal collision. The Supplemental Restraint System consists of an air bag module (located in the center of the steering wheel), a diagnosis sensor unit, warning lamp, wiring harness, a crash zone sensor (4WD models) and spiral cable. Information necessary to service the system safely is included in the **RS section** of this Service Manual.

WARNING:

- **To avoid rendering the SRS inoperative, which could increase the risk of personal injury or death in the event of a collision which would result in air bag inflation, all maintenance must be performed by an authorized NISSAN dealer.**
- **Improper maintenance, including incorrect removal and installation of the SRS, can lead to personal injury caused by unintentional activation of the system.**
- **Do not use electrical test equipment on any circuit related to the SRS unless instructed to in this Service Manual. SRS wiring harnesses are covered with yellow insulation either just before the harness connectors or for the complete harness, for easy identification.**

Introduction

To prevent the ozone layer from being destroyed, R-134a refrigerant has replaced the previously used CFC-12 (R-12).
The new and previous service tools, refrigerant, lubricant, etc. are not interchangeable due to differences in their physical properties and characteristics.
Always service the R-134a air conditioner system using the specified tools, lubricant and refrigerant, observing the following precautions:

Identification

IDENTIFICATION LABEL FOR VEHICLE

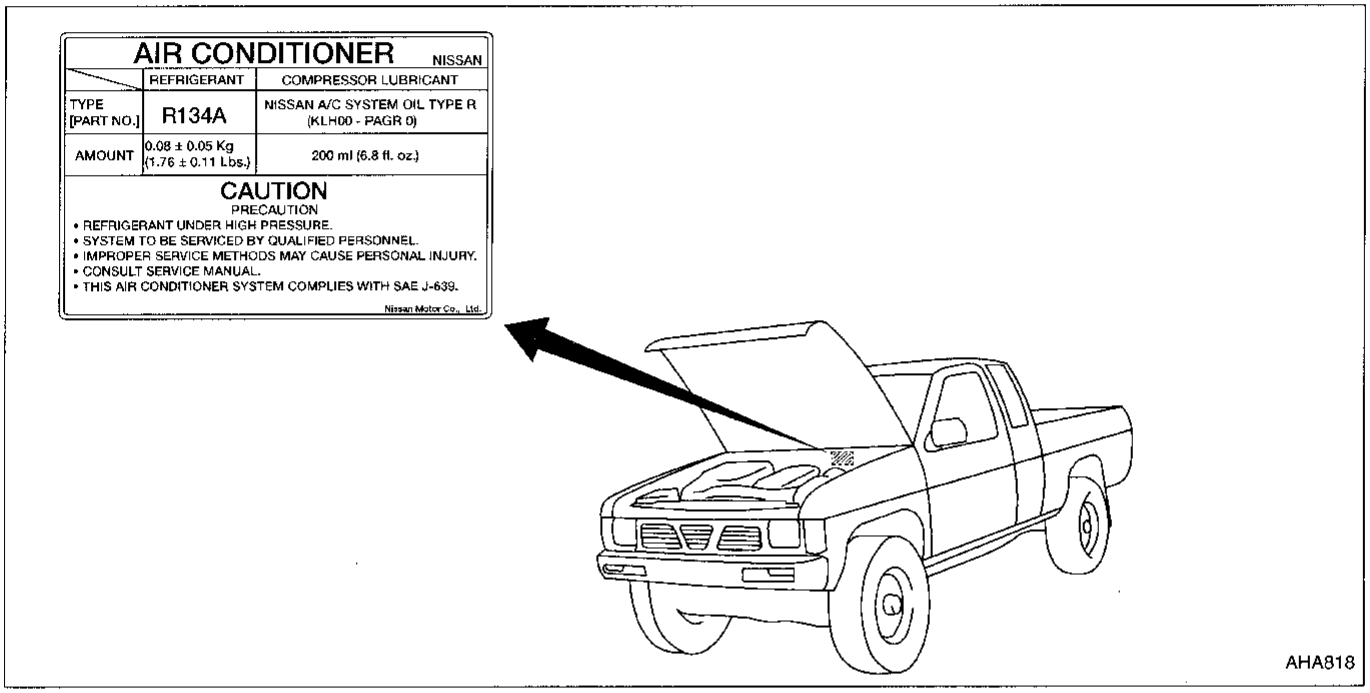

PARTS IDENTIFICATION

1. Compressor label

R134a label

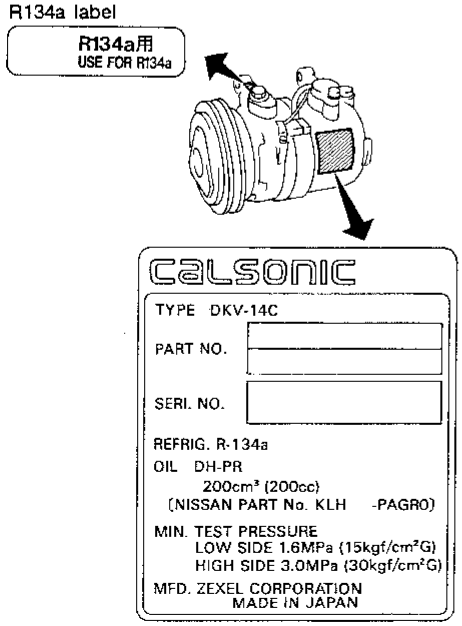

2. Other component parts label

R134a label

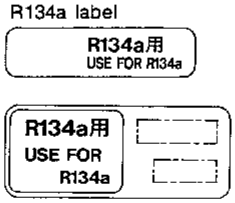

Base color: Light blue

Part name	Identification
1. Compressor	R134a label or Compressor label
2. Cooling unit	R134a label
3. Expansion valve	Stamp
4. Condenser	R134a label
5. Liquid tank	R134a label
6. Hose or pipe	R134a label

3. Service valves (suction/discharge)

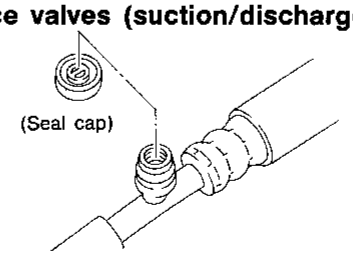

The service valves are specially designed for the R-134a system.

Those for the CFC-12 (R-12) system are different in size and configuration.

Refer to "SERVICE COUPLERS", "Precautions for Service Equipment", HA-10.

AHA860

Precautions for Working with R-134a

WARNING:

- CFC-12 (R-12) refrigerant and R-134a refrigerant are not compatible. These refrigerants must never be mixed, even in the smallest amounts. If the refrigerants are mixed, compressor malfunction is likely.
- Use only specified lubricant for the R-134a A/C system and R-134a components. If lubricant other than that specified is used, compressor malfunction is likely.
- The specified R-134a lubricant rapidly absorbs moisture from the atmosphere. The following handling precautions must be observed:
  - a: When removing refrigerant components from a vehicle, immediately cap (seal) the component to minimize the entry of moisture from the atmosphere.
  - b: When installing refrigerant components to a vehicle, do not remove the caps (unseal) until just before connecting the components. Connect all refrigerant loop components as quickly as possible to minimize the entry of moisture into the system.
  - c: Only use the specified lubricant from a sealed container. Immediately reseal containers of lubricant. Without proper sealing, lubricant will become moisture saturated and should not be used.
  - d: Avoid breathing A/C refrigerant and lubricant vapor or mist. Exposure may irritate eyes, nose and throat. Remove R-134a from the A/C system, using certified service equipment meeting requirements of SAE J2210 (R-134a recycling equipment), or J2209 (R-134a recovery equipment). If accidental system discharge occurs, ventilate work area before resuming service. Additional health and safety information may be obtained from refrigerant and lubricant manufacturers.
  - e: Do not allow lubricant to contact styrofoam parts. Damage may result.

General Refrigerant Precautions

WARNING:

- Do not release refrigerant into the air. Use approved recovery/recycling equipment to capture the refrigerant every time an air conditioner system is discharged.
- Always wear eye and hand protection (goggles and gloves) when working with any refrigerant or air conditioner system.
- Do not store or heat refrigerant containers above 52°C (125°F).
- Do not heat a refrigerant container with an open flame; if container warming is required, place the bottom of the container in a warm pail of water.
- Do not intentionally drop, puncture, or incinerate refrigerant containers.
- Keep refrigerant away from open flames: poisonous gas will be produced if refrigerant burns.
- Refrigerant will displace oxygen, therefore be certain to work in well ventilated areas to prevent suffocation.
- Do not introduce compressed air into any refrigerant container or refrigerant component.

Precautions for Refrigerant Connection

WARNING:
Make sure all refrigerant is discharged into the recycling equipment and the pressure in the system is less than atmospheric pressure. Then gradually loosen the discharge side hose fitting and remove it.

CAUTION:
When replacing or cleaning refrigerant cycle components, observe the following.

- **Do not leave compressor on its side or upside down for more than 10 minutes. Compressor lubricant will enter low pressure chamber.**
- **When connecting tubes, always use a torque wrench and a back-up wrench.**
- **After disconnecting tubes, immediately plug all openings to prevent entry of dirt and moisture.**
- **When installing an air conditioner in the vehicle, connect the pipes as the final stage of the operation. Do not remove the seal caps of pipes and other components until just before required for connection.**
- **Allow components stored in cool areas to warm to working area temperature before removing seal caps. This prevents condensation from forming inside A/C components.**
- **Thoroughly remove moisture from the refrigeration system before charging the refrigerant.**
- **Always replace used O-rings.**
- **When connecting tube, apply lubricant to portions shown in illustration. Be careful not to apply lubricant to threaded portion.**
  Lubricant name: Nissan A/C System Oil Type R
  Part number: KLH00-PAGR0
- **O-ring must be closely attached to inflated portion of tube.**
- **After inserting tube into union until O-ring is no longer visible, tighten nut to specified torque.**
- **After connecting line, conduct leak test and make sure that there is no leakage. When the gas leaking point is found, disconnect that line and replace the O-ring. Then tighten connections of seal seat to the specified torque.**

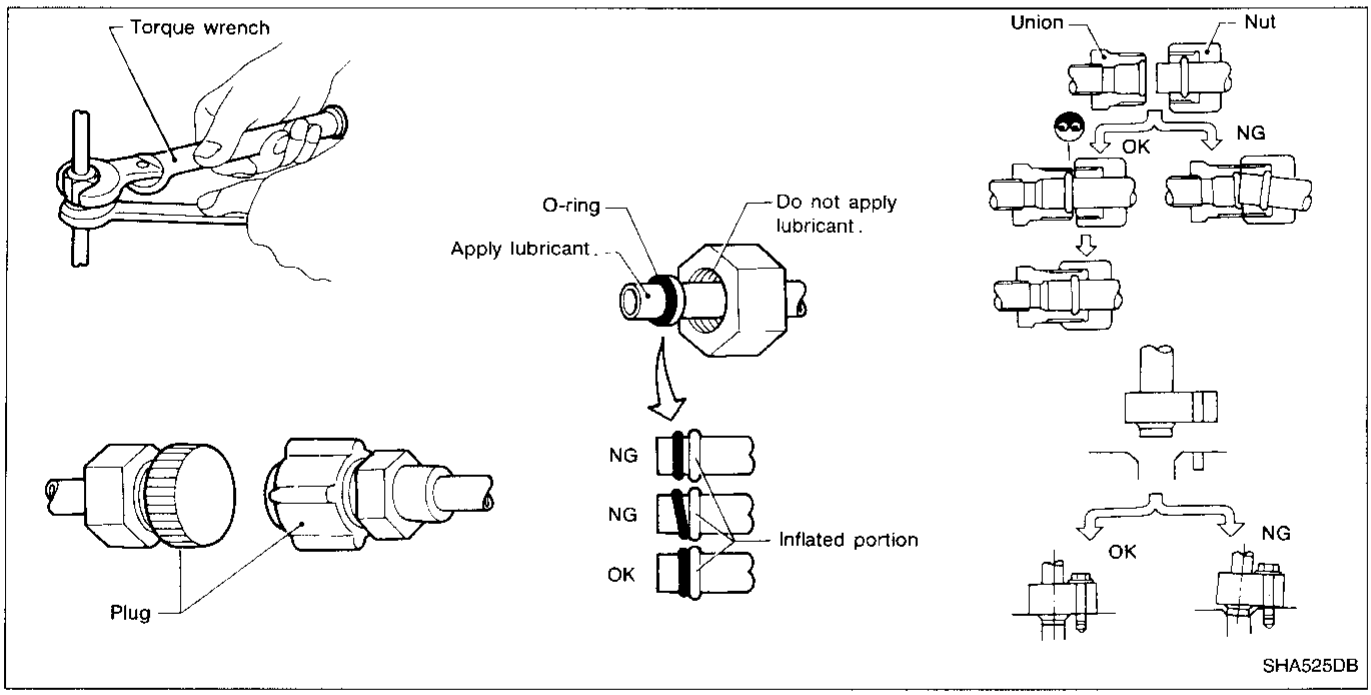

Precautions for Servicing Compressor

- **Plug all openings to prevent moisture and foreign matter from entering.**
- **Do not leave compressor on its side or upside down for more than 10 minutes. Compressor lubricant will enter low pressure chamber.**
- **When replacing or repairing compressor, be sure to remove lubricant from the compessor and check the lubricant quantity extracted.**
- **When replacing or repairing compressor, follow Lubricant — Checking and Adjusting Procedure exactly. Refer to "Compressor Lubricant Quantity", "SERVICE PROCEDURES", HA-50.**
- **Keep friction surfaces between clutch and pulley clean. If the surface is contaminated, with oil, wipe it off by using a clean waste cloth moistened with thinner.**
- **After compressor service operation, turn the compressor shaft by hand more than five turns in both directions. This will equally distribute lubricant inside the compressor. After the compressor is installed, let the engine idle and operate the compressor for one hour.**
- **After replacing the compressor magnet clutch, apply voltage to the new one and check for normal operation.**

Special Service Tools

The actual shapes of Kent-Moore tools may differ from those of special service tools illustrated here.

Tool number (Kent-Moore No.) Tool name	Description
KV99231260 (J-38874) Clutch disc wrench	Removing shaft nut and clutch disc 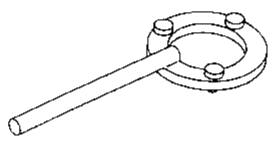 NT204
KV99232340 (J-38874) Clutch disc puller	Removing clutch disc 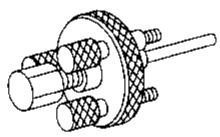 NT206
KV99234330 (J-39024) Pulley installer	Installing pulley 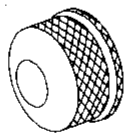 NT207
KV99233130 (J-39023) Center pulley puller	Removing pulley 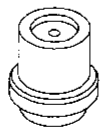 NT208

R-134a Service Tools and Equipment

Never mix R-134a refrigerant and/or its specified lubricant with CFC-12 (R-12) refrigerant and/or its lubricant. Separate and non-interchangeable service equipment must be used for handling each type of refrigerant/lubricant.
Refrigerant container fittings, service hose fittings and service equipment fittings (equipment which handles refrigerant and/or lubricant) are different between CFC-12 (R-12) and R-134a. This is to avoid mixed use of the refrigerants/lubricant.
Adapters to convert from one size fitting to the other must never be used: refrigerant/lubricant contamination will occur and compressor failure will result.

Tool number (Kent-Moore No.) Tool name	Description	Note
R-134a refrigerant	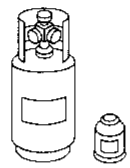 NT196	Container color: Light blue Container marking: R-134a Fitting size: Thread size ● large container 1/2"-16 ACME
KLH00-PAGR0 (—) Nissan A/C System Oil Type R	 NT197	Type: Polyalkyline glycol oil (PAG), type R Application: R-134a vane rotary compressors (Nissan only) Lubricity: 40 mℓ (1.4 US fl oz, 1.4 Imp fl oz)
(J-39500-NI) Recovery/Recycling equipment (ACR4)	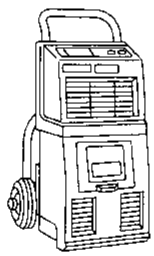 NT195	Function: Refrigerant Recovery and Recycling
(J-39400) Electrical leak detector	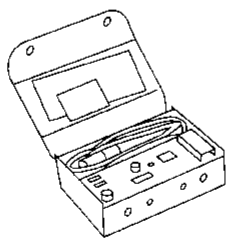 NT198	Power supply: ● DC 12 V (Cigarette lighter)
(J-39183) Manifold gauge set (with hoses and couplers)	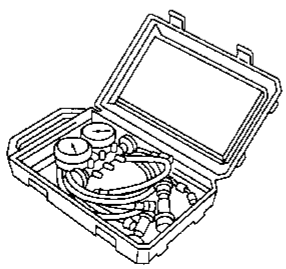 NT199	Identification: ● The gauge face indicates R-134a. Fitting size: Thread size ● 1/2"-16 ACME

R-134a Service Tools and Equipment (Cont'd)

Tool number (Kent-Moore No.) Tool name	Description	Note
Service hoses ● High side hose (J-39501-72) ● Low side hose (J-39502-72) ● Utility hose (J-39476-72)	 NT201	Hose color: ● Low hose: Blue with black stripe ● High hose: Red with black stripe ● Utility hose: Yellow with black stripe or green with black stripe Hose fitting to gauge: ● 1/2"-16 ACME
Service couplers ● High side coupler (J-39500-20) ● Low side coupler (J-39500-24)	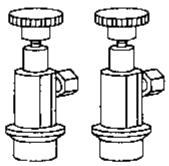 NT202	Hose fitting to service hose: ● M14 x 1.5 fitting (optional) or permanently attached.
(J-39650) Refrigerant weight scale	 NT200	For measuring of refrigerant Fitting size: Thread size ● 1/2"-16 ACME
(J-39649) Vacuum pump (Including the isolator valve)	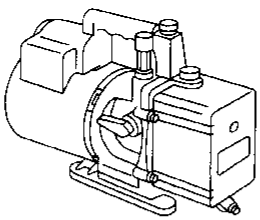 NT203	Capacity: ● Air displacement: 4 CFM ● Micron rating: 20 microns ● Oil capacity: 482 g (17 oz) Fitting size: Thread size ● 1/2"-16 ACME

Precautions for Service Equipment

RECOVERY/RECYCLING EQUIPMENT

Follow the manufacturer's instructions for machine operation and machine maintenance. Never introduce any refrigerant other than that specified into the machine.

ELECTRONIC LEAK DETECTOR

Follow the manufacturer's instructions for tester operation and tester maintenance.

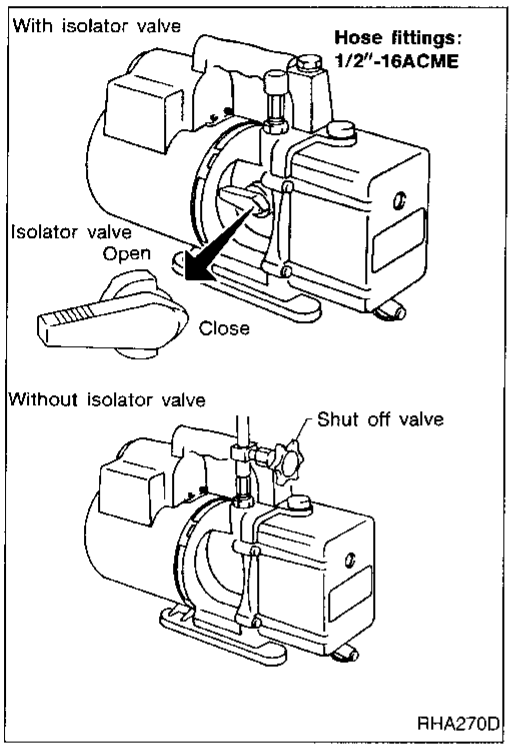

VACUUM PUMP

The lubricating oil contained inside the vacuum pump is not compatible with the specified lubricant for R-134a A/C systems. The vent side of the vacuum pump is exposed to atmospheric pressure. Therefore, if the pump is switched off after evacuation, the lubricating oil may migrate into the hose. To prevent this, isolate the pump from the hose after evacuation (vacuuming).
This migration is avoided by placing a manual shut-off valve near the hose-to-pump connection, as follows:

- Usually vacuum pumps have a manual isolator valve as part of the pump. Close this valve to isolate the service hose from the pump.
- For pumps without an isolator valve, use a hose equipped with a manual shut-off valve near the pump end. Close the valve to isolate the hose from the pump.
- If the hose has an automatic shut-off valve, disconnect the hose from the pump: as long as the hose is connected, the valve is open and lubricating oil may migrate.

Some one-way valves open when vacuum is applied and close under a no vacuum condition. Such valves may restrict the pump's ability to pull a deep vacuum and are not recommended.

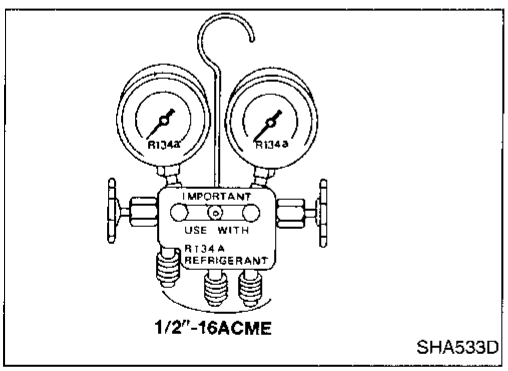

MANIFOLD GAUGE SET

Be certain the gauge set has 1/2"-16 ACME threaded connections for service hoses. Confirm the set has been used only with refrigerant R-134a along with specified lubricant.

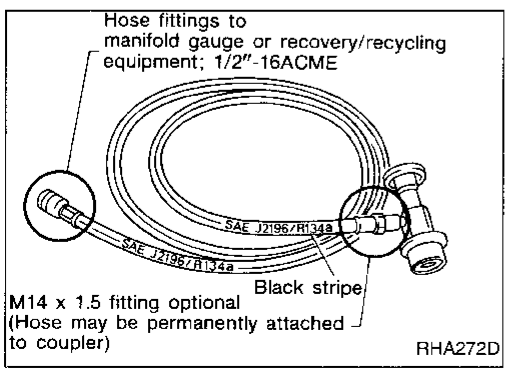

SERVICE HOSES

Be certain that the service hoses display the markings described (colored hose with black stripe). Be certain that all hoses include a positive shut-off device (either manual or automatic) near the end of the hoses opposite the manifold gauge.

Precautions for Service Equipment (Cont'd)

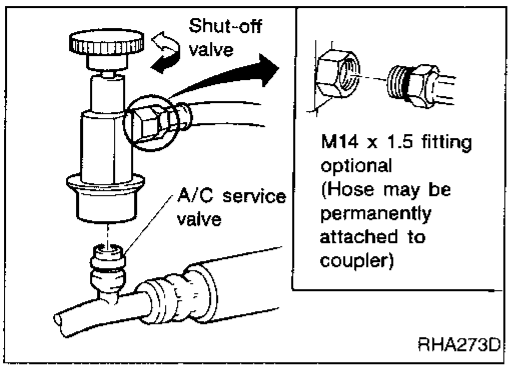

SERVICE COUPLERS

Never attempt to connect R-134a service couplers to an CFC-12 (R-12) A/C system. The R-134a couplers will not properly connect to the CFC-12 (R-12) system. However, if an improper connection is attempted, discharging and contamination may occur

Shut-off valve rotation	A/C service valve
Clockwise	Open
Counterclockwise	Close

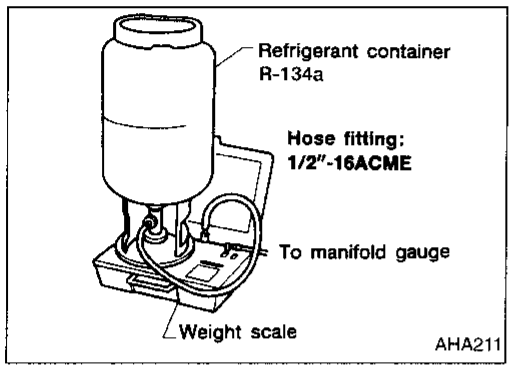

REFRIGERANT WEIGHT SCALE

When using a scale which controls refrigerant flow electronically, assure the following:

- Hose fitting size is 1/2"-16 ACME
- No refrigerant other than R-134a (along with specified lubricant) has been used with the scale.

CHARGING CYLINDER

Using a charging cylinder is not recommended. Refrigerant may be vented into the air through the cylinder's top valve when filling the cylinder.

Refrigeration Cycle

REFRIGERANT FLOW

The refrigerant flows in the standard pattern. It flows from compressor through condenser, liquid tank, evaporator and back to compressor.
The refrigerant evaporation through the evaporator coil is controlled by an externally equalized expansion valve, located inside the evaporator case.

FREEZE PROTECTION

The compressor cycles on and off to maintain the evaporator temperature within a specified range. When the evaporator coil temperature falls below a specified point, the thermo control amplifier interrupts the compressor operation. When the evaporator coil temperature rises above the specification, the thermo control amplifier allows compressor operation.

REFRIGERANT SYSTEM PROTECTION

Dual-pressure switch

The refrigerant system is protected against excessively high or low pressure. The protection is effected by the dual-pressure switch located on the liquid tank. If the pressure rises or falls out of specifications, the switch opens to interrupt the compressor operation.

Pressure relief valve

The refrigerant system is also protected by a pressure relief valve. The valve is located on the end of high flexible hose near compressor. When refrigerant pressure in the system increases abnormally [over 3,727 kPa (38 kg/cm^2, 540 psi)], the relief valve's release port opens automatically. The valve then releases refrigerant into the atmosphere.

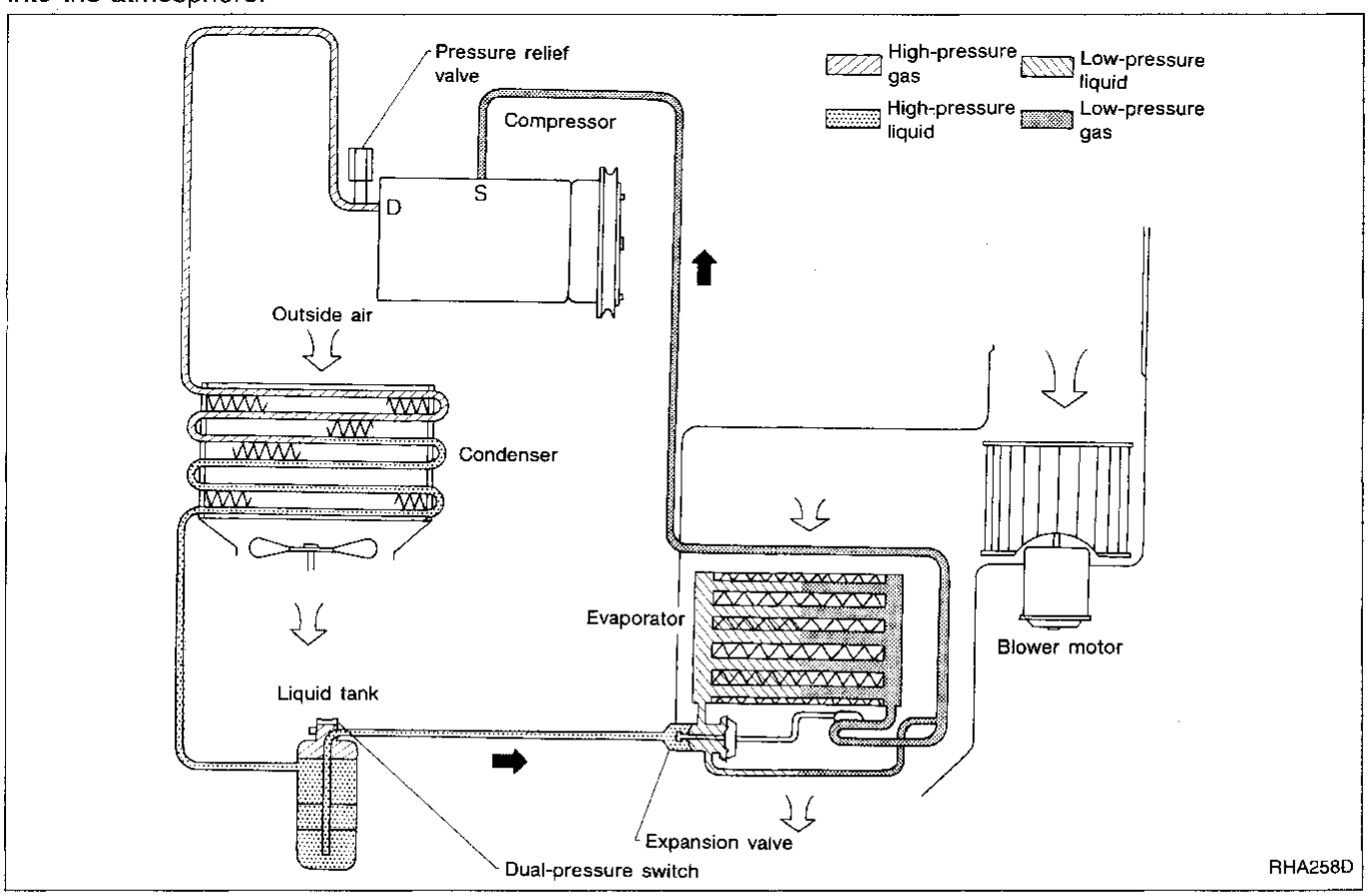

Component Layout

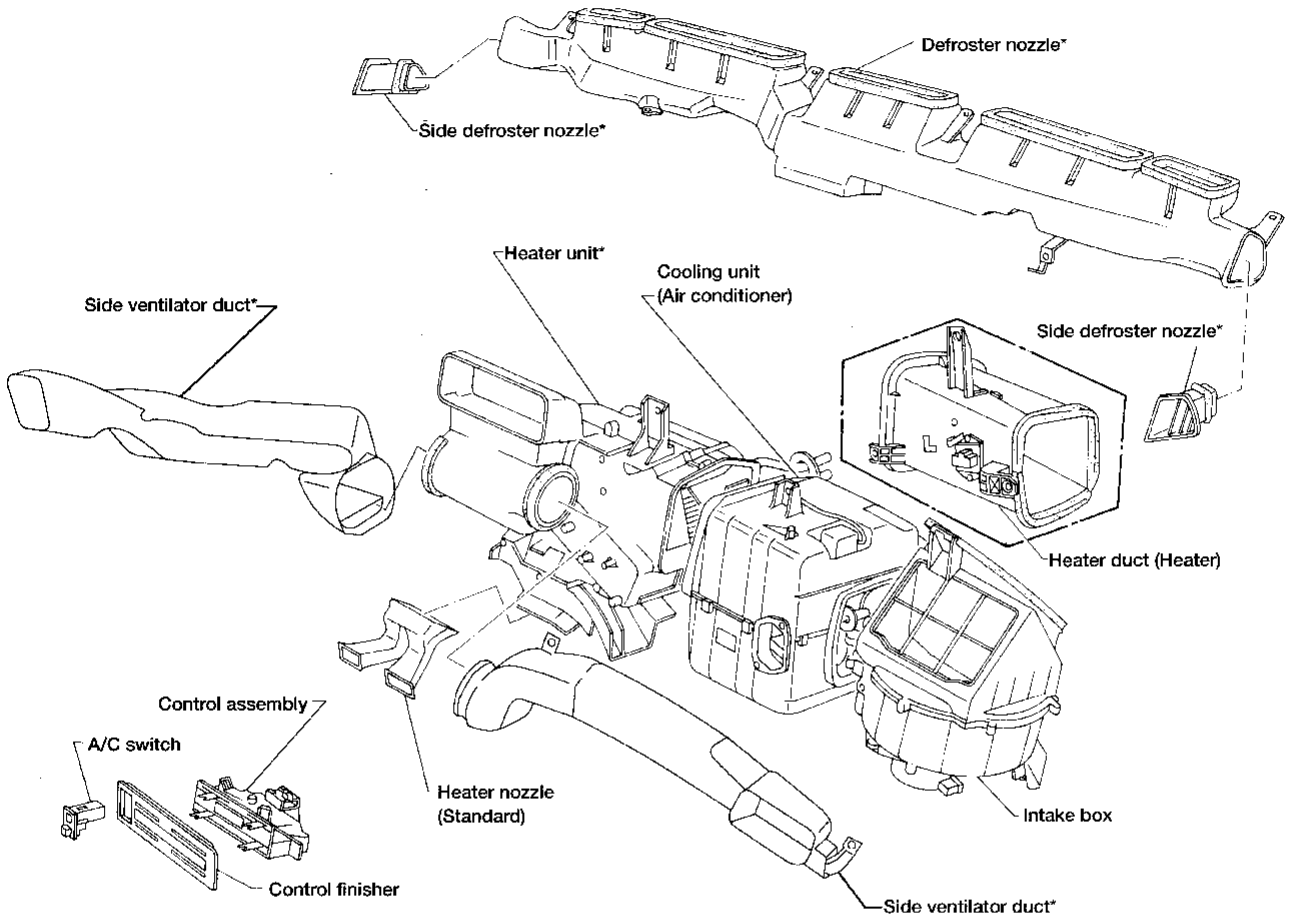

* : For removal, it is necessary to remove instrument assembly.

AHA821

Discharge Air Flow

Air outlets

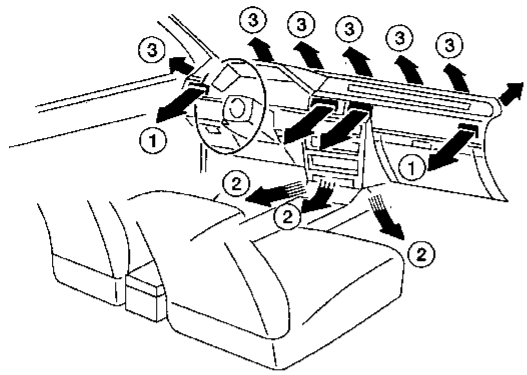

Foot

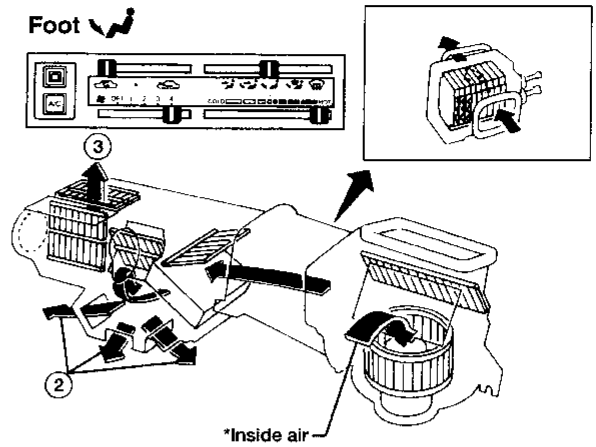

Face

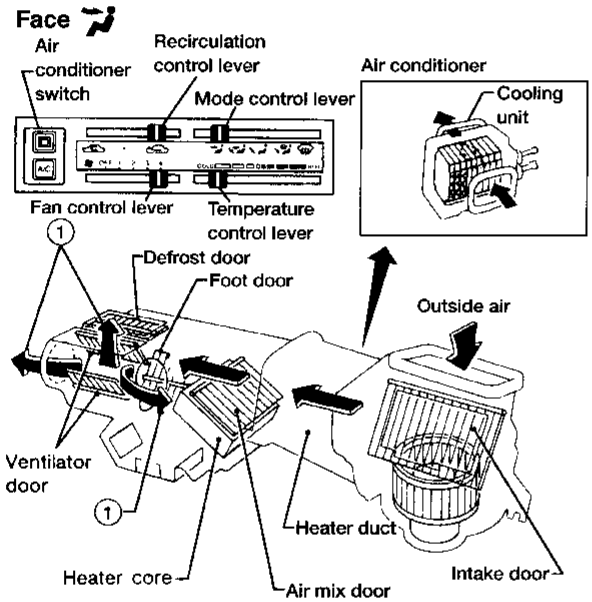

Foot and defrost

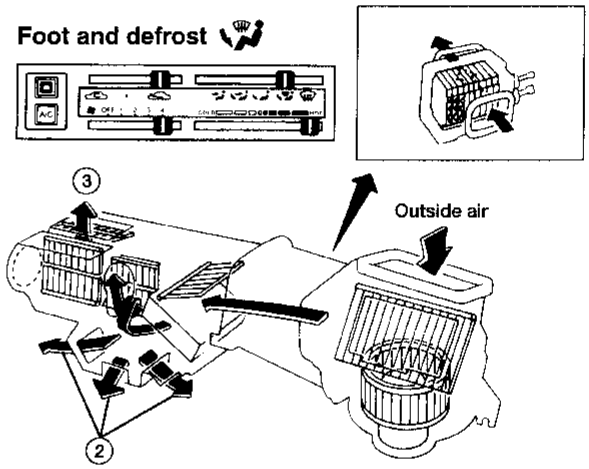

Bi-level

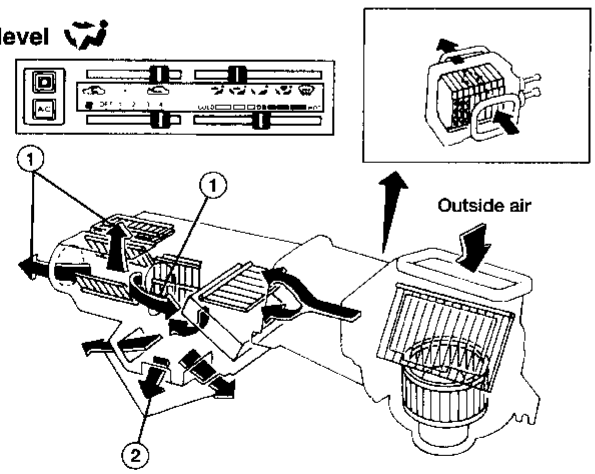

Defrost

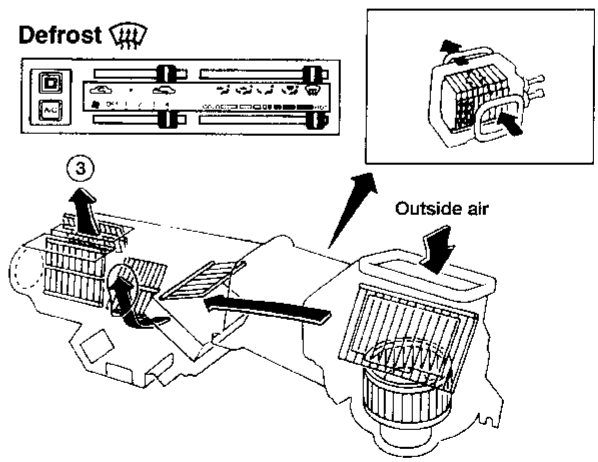

① : To face
② : To foot
③ : To defrost
* : When in REC position

AHA819

Control Operation

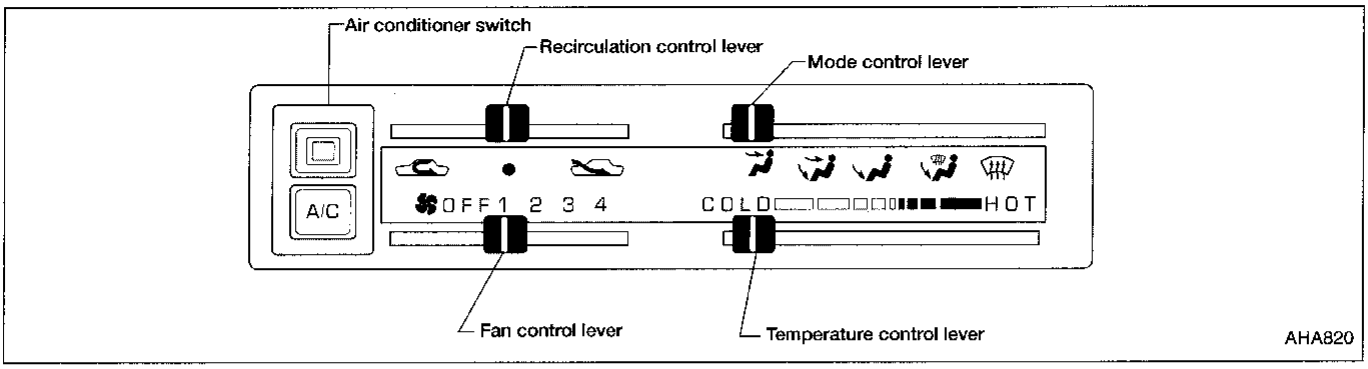

FAN CONTROL LEVER

This lever controls fan speed and turns the fan ON and OFF.

MODE CONTROL LEVER

This lever controls the outlet air flow.

TEMPERATURE CONTROL LEVER

This lever allows adjustment of the temperature of the outlet air.

RECIRCULATION CONTROL LEVER

FRESH position:
Outside air is drawn into the passenger compartment.
Recirculation REC position:
Interior air is recirculated inside the vehicle.

AIR CONDITIONER SWITCH

The air conditioner switch controls the A/C system. When the switch is depressed with the fan ON, the compressor will turn ON. The indicator lamp will also light.

The air conditioner cooling function operates only when the engine is running.

How to Perform Trouble Diagnoses for Quick and Accurate Repair

WORK FLOW

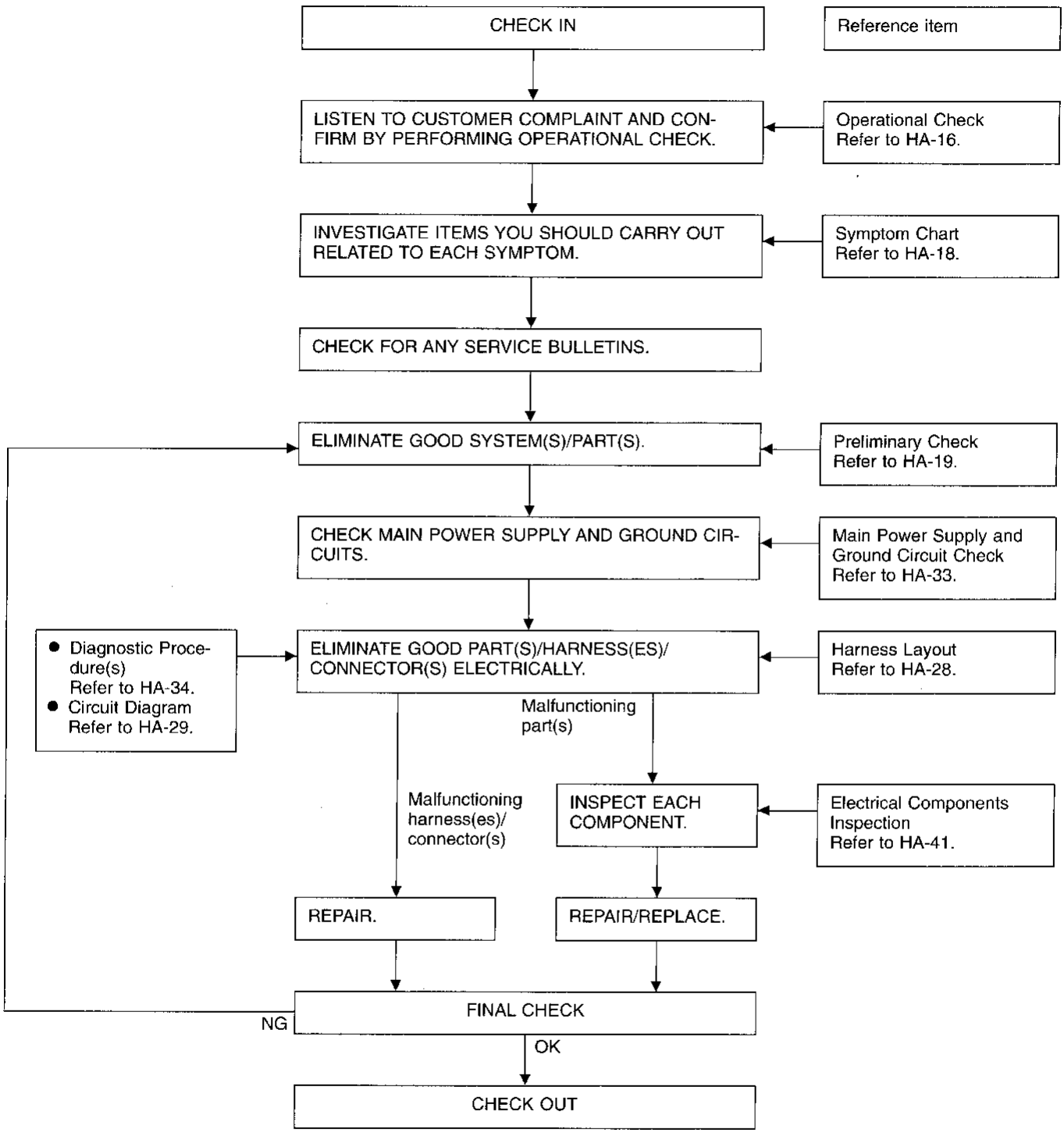

Operational Check

The purpose of the operational check is to confirm that the system operates properly.

CONDITIONS:

- **Engine running at normal operating temperature.**

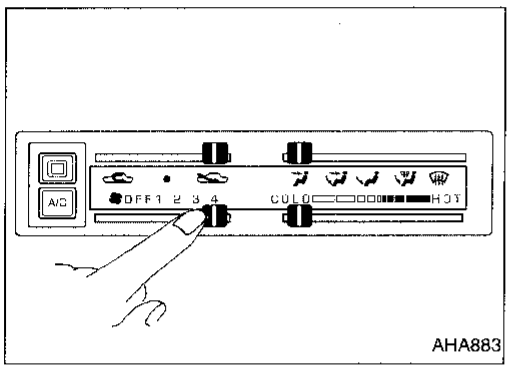

AHA883

PROCEDURE:

1. Check blower

a. Slide fan control lever to 1-speed.
Blower should operate on 1-speed.
b. Slide fan control lever to 2-speed and continue checking blower speed until all speeds are checked.
c. Leave blower on 4-speed.

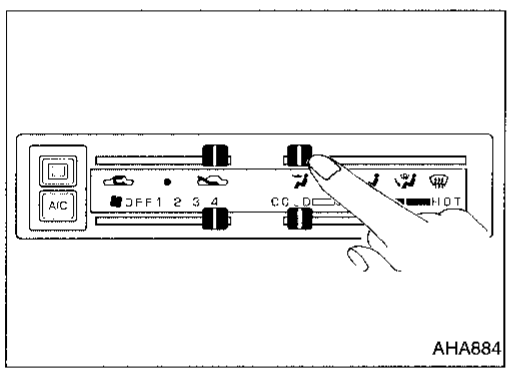

AHA884

2. Check discharge air

a. Slide mode control lever to position.
b. Confirm that all discharge air comes out of face vents.
c. Slide mode control lever to position.
d. Confirm that discharge air comes out of face vents and foot vents.
e. Slide mode control lever to position.
f. Confirm that discharge air comes out of foot vents, with some air from defrost vents.
g. Slide mode control lever to position.
h. Confirm that discharge air comes out of foot vents with some air from defrost vents.
i. Slide mode control lever to position.
j. Confirm that all discharge air comes out of defrost vents.

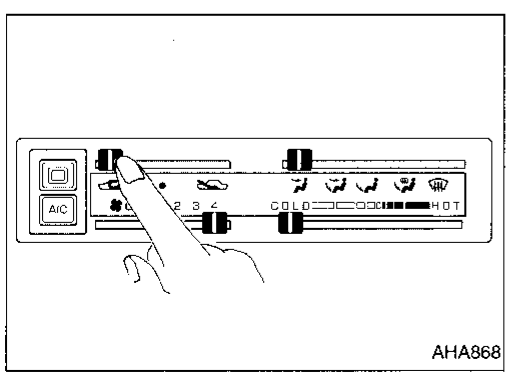

AHA868

3. Check recirculation

a. Slide recirculation control lever to the REC position.
b. Listen for intake door position change (you should hear blower sound change slightly).

Operational Check (Cont'd)

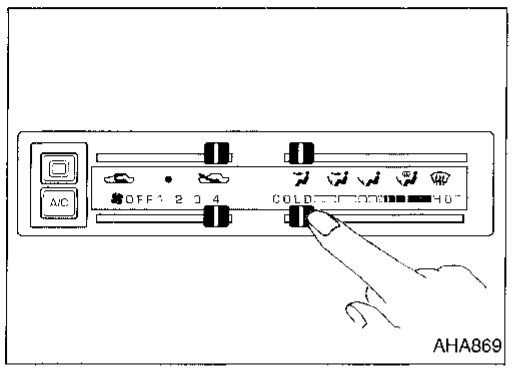

AHA869

4. Check temperature decrease

a. Slide temperature control lever to full cold.
b. Check for cold air at discharge air outlets.

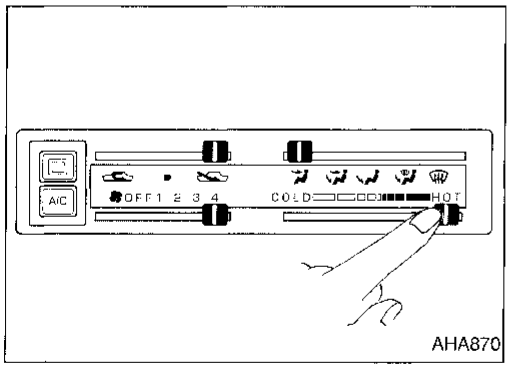

AHA870

5. Check temperature increase

a. Slide temperature control lever to full hot.
b. Check for hot air at discharge air outlets.

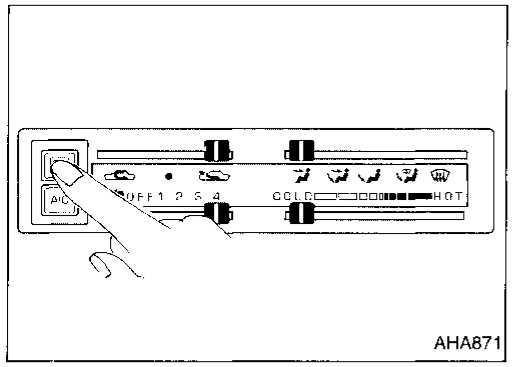

AHA871

6. Check A/C switch

Move fan control lever to the desired position (1 to 4) and press air conditioner switch to turn air conditioner ON.
Indicator light will come on when air conditioner is ON.

Symptom Chart

DIAGNOSTIC TABLE

PROCEDURE	Preliminary Check			Diagnostic Procedure		Main Power Supply and Ground Circuit Check			Electrical Components Inspection									
REFERENCE PAGE	HA-19	HA-20	HA-21	HA-34	HA-37	HA-33			HA-41	HA-41	HA-41	HA-41	HA-42	HA-42	HA-41	HA-53	HA-42	—
SYMPTOM	Preliminary check 1	Preliminary check 2	Preliminary check 3	Diagnostic procedure 1	Diagnostic procedure 2	15A Fuses (Nos. 4 and 5)	10A Fuse (No. 6)	15A Fuse (No. 3)	Blower motor	Resistor	A/C switch	Fan switch	Blower motor relay	A/C relay	Dual-pressure switch	Compressor: Magnet clutch	Compressor: Thermal protector	Harness
A/C does not blow cold air.	❶			○		○	○	○	○	○	○	○	○	○	○	○	○	○
Blower motor does not rotate.	❶			❷		○			○	○		○	○					○
Magnet clutch does not engage when A/C switch and fan switch are ON.	❶				❷		○	○			○	○	○	○	○	○	○	○
Noise.		❶																
Insufficient heating.			❶	○														○

❶, ❷: The number means checking order.
○: Checking order depends on malfunction in flow chart.

Preliminary Check

PRELIMINARY CHECK 1

A/C does not blow cold air.

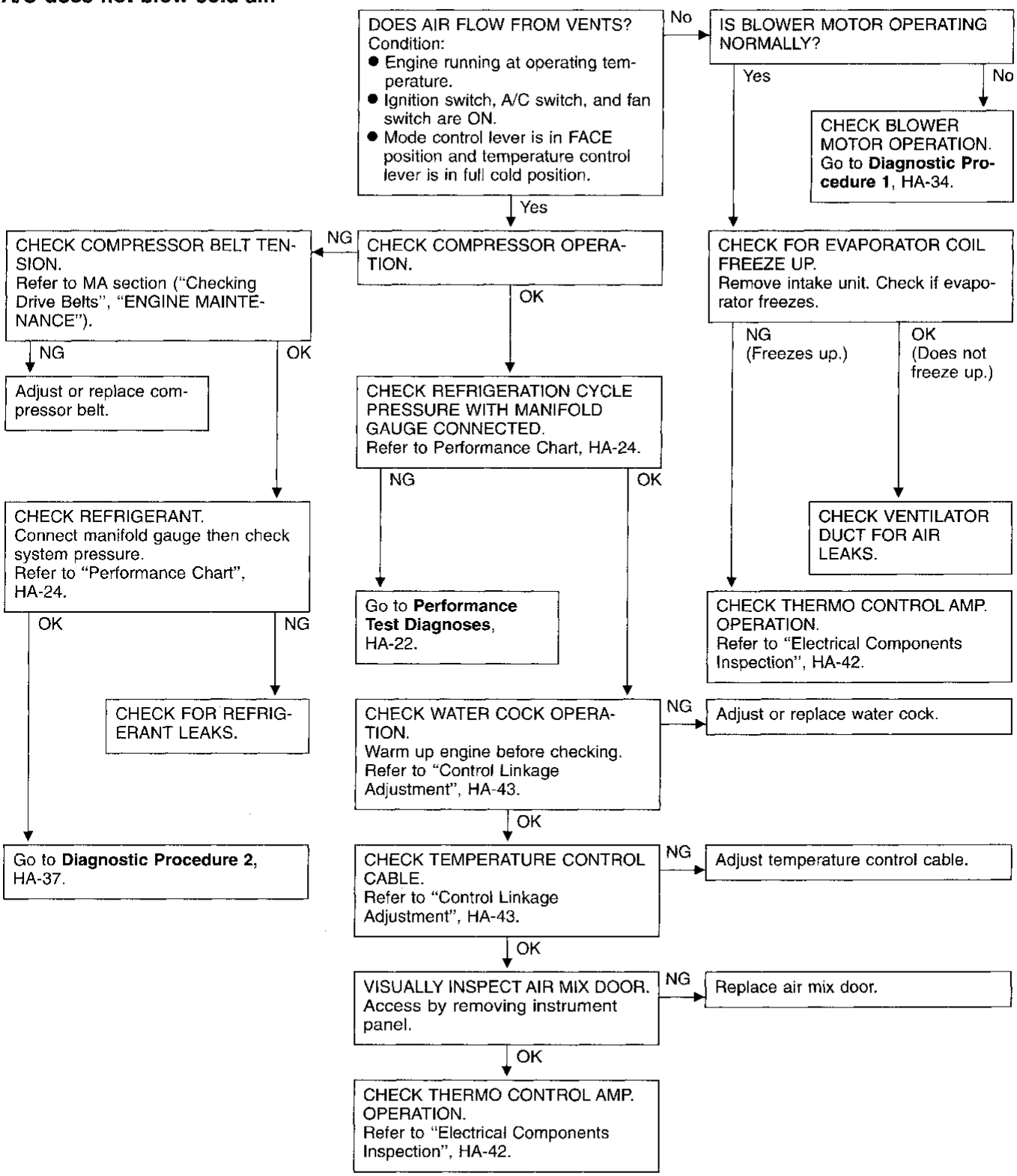

PRELIMINARY CHECK 2

Noise.

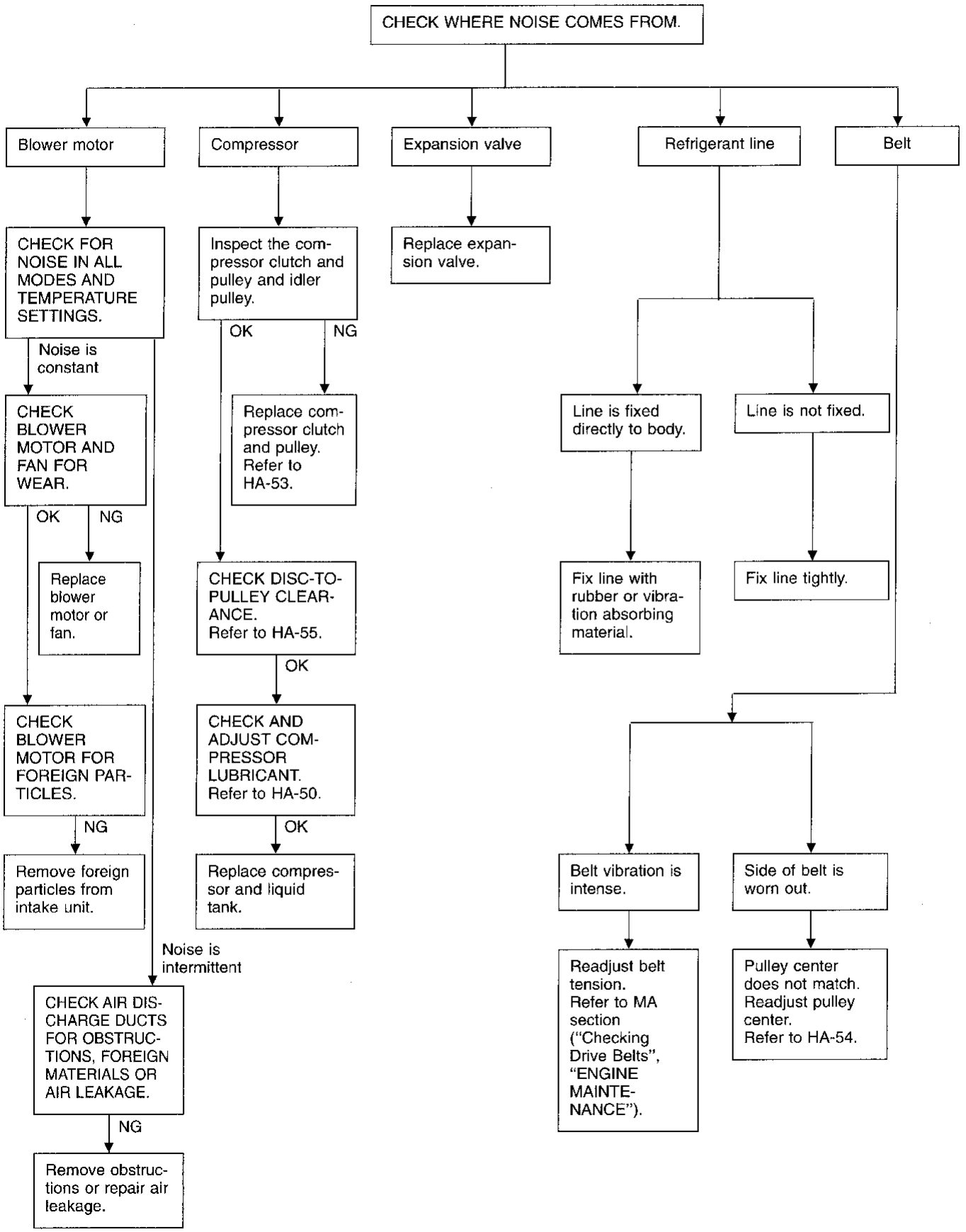

PRELIMINARY CHECK 3

Insufficient heating.

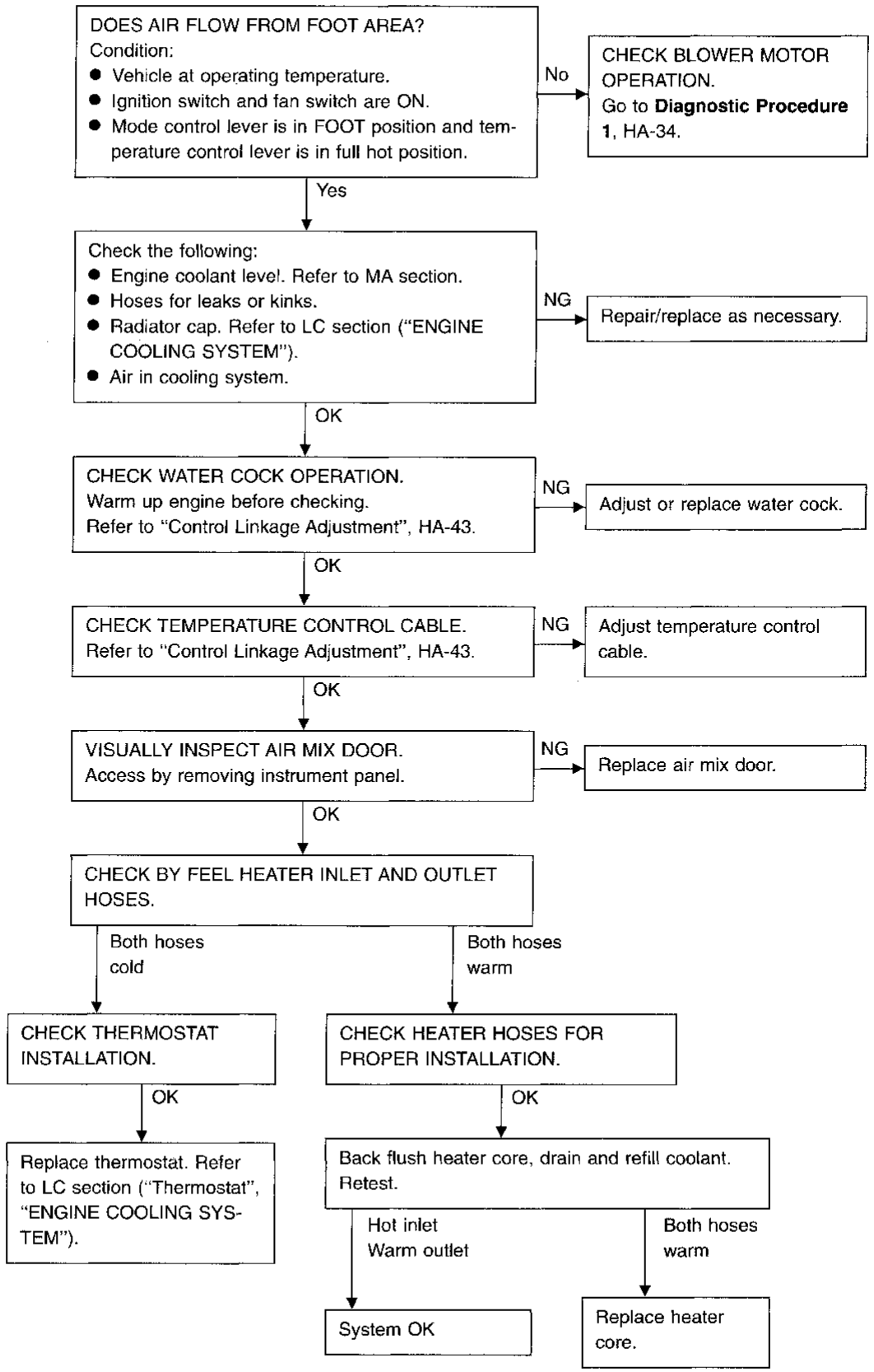

Performance Test Diagnoses

INSUFFICIENT COOLING

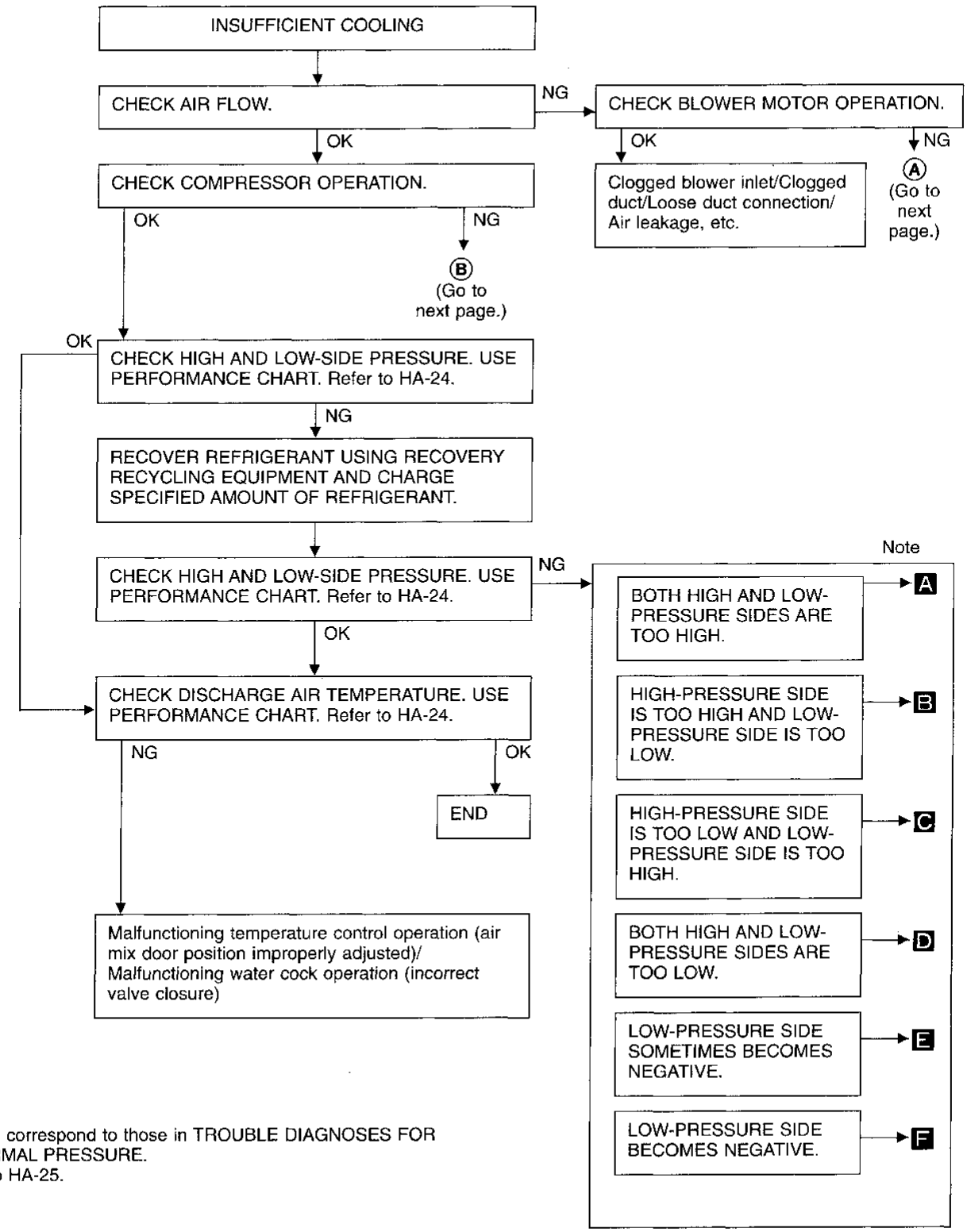

Note: A-F correspond to those in TROUBLE DIAGNOSES FOR ABNORMAL PRESSURE.
Refer to HA-25.

Performance Test Diagnoses (Cont'd)

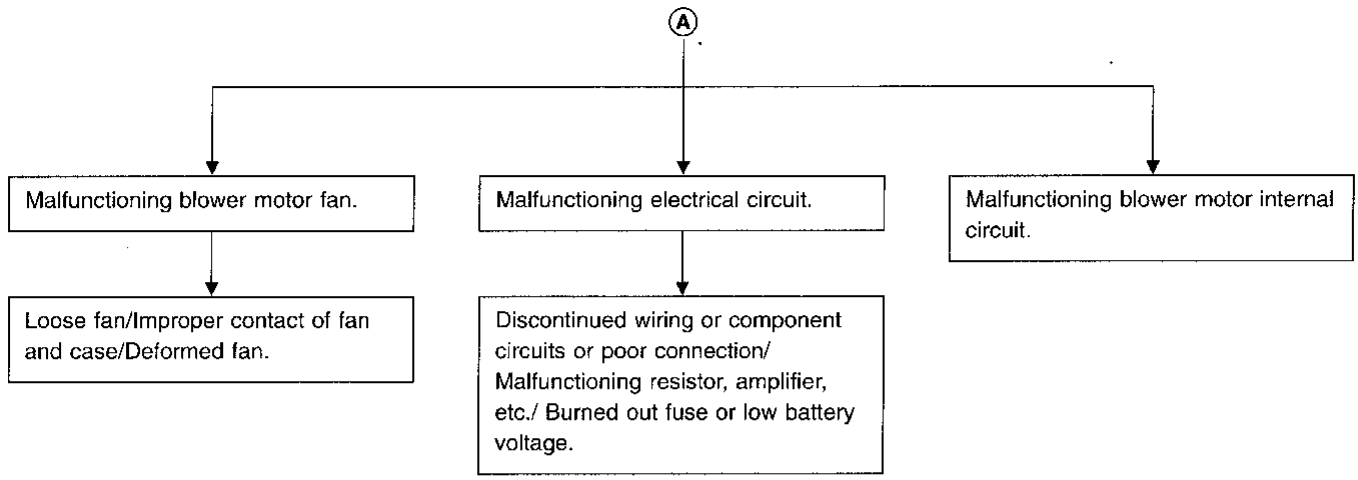

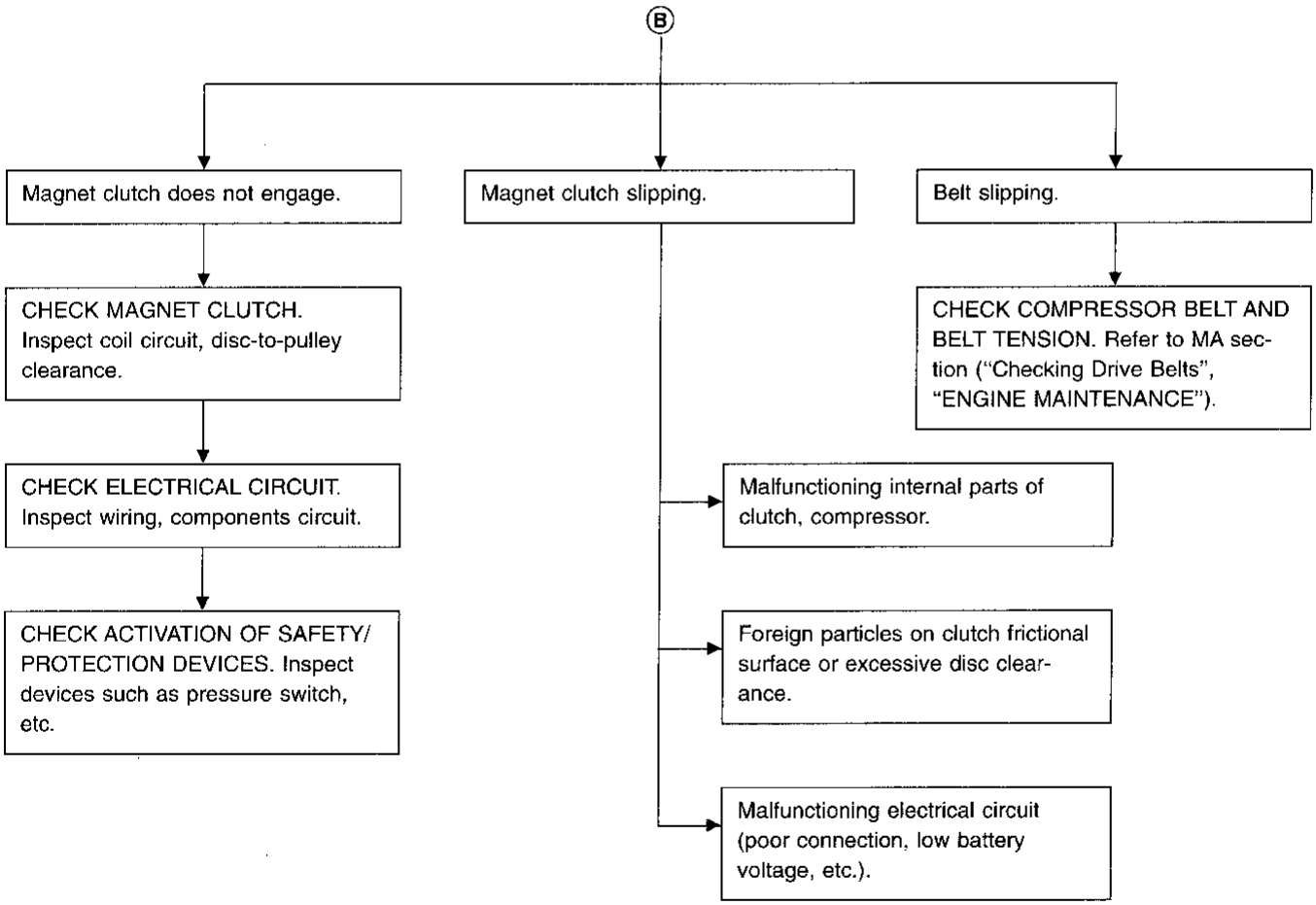

Performance Chart

TEST CONDITION

Testing must be performed as follows:

Vehicle location: Indoors or in the shade (in a well-ventilated place)
Doors: Closed
Door window: Open
Hood: Open
TEMP. setting: Max. COLD
Discharge air: FACE VENT
INTAKE lever position: (Recirculation)
FAN speed: 4-speed
Engine speed: 1,500 rpm

Operate the air conditioner system for 10 minutes before taking measurements.

TEST READING

Recirculating-to-discharge air temperature table

Inside air (Recirculating air) at blower assembly inlet		Discharge air temperature at center ventilator °C (°F)
Relative humidity %	Air temperature °C (°F)	
50 - 60	20 (68)	6.6 - 8.3 (44 - 47)
	25 (77)	10.4 - 12.4 (51 - 54)
	30 (86)	14.2 - 16.7 (58 - 62)
	35 (95)	18.2 - 21.0 (65 - 70)
	40 (104)	22.0 - 25.2 (72 - 77)
60 - 70	20 (68)	8.3 - 9.8 (47 - 50)
	25 (77)	12.4 - 14.4 (54 - 58)
	30 (86)	16.7 - 18.9 (62 - 66)
	35 (95)	21.0 - 23.6 (70 - 74)
	40 (104)	25.2 - 28.1 (77 - 83)

Ambient air temperature-to-operating pressure table

Ambient air		High-pressure (Discharge side) kPa (kg/cm^2, psi)	Low-pressure (Suction side) kPa (kg/cm^2, psi)
Relative humidity %	Air temperature °C (°F)		
50 - 70	20 (68)	961 - 1,187 (9.8 - 12.1, 139 - 172)	108 - 157 (1.1 - 1.6, 16 - 23)
	25 (77)	1,295 - 1,599 (13.2 - 16.3, 188 - 232)	161.8 - 215.8 (1.65 - 2.2, 23.5 - 31.3)
	30 (86)	1,285 - 1,569 (13.1 - 16, 186 - 228)	167 - 216 (1.7 - 2.2, 24 - 31)
	35 (95)	1,520 - 1,863 (15.5 - 19, 220 - 270)	235 - 284 (2.4 - 2.9, 34 - 41)
	40 (104)	1,765 - 2,158 (18 - 22, 256 - 313)	289.3 - 353.1 (2.95 - 3.6, 41.9 - 51.2)

Trouble Diagnoses for Abnormal Pressure

Whenever system's high or low-pressure side is abnormal, diagnose using a manifold gauge. The marker above the gauge scale in the following table indicates the standard (normal) pressure range. Since the standard (normal) pressure differs from vehicle to vehicle, refer to HA-24 ("Ambient air temperature-to-operating pressure table").

Gauge indication	Refrigerant cycle	Probable cause	Corrective action
Both high and low-pressure sides are too high. **A** 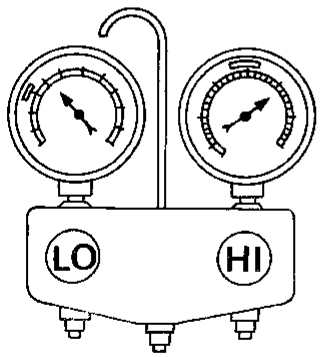 AC359A	• Pressure is reduced soon after water is splashed on condenser.	Excessive refrigerant charge in refrigeration cycle.	Reduce refrigerant until specified pressure is obtained.
	Air suction by cooling fan is insufficient.	Insufficient condenser cooling performance. ↓ ① Condenser fins are clogged. ② Improper fan rotation of cooling fan.	• Clean condenser. • Check and repair cooling fan as necessary.
	• Low-pressure pipe is not cold. • When compressor is stopped high-pressure value quickly drops by approximately 196 kPa (2 kg/cm^2, 28 psi). It then decreases gradually thereafter.	Poor heat exchange in condenser. (After compressor operation stops, high pressure decreases too slowly.) ↓ Air in refrigeration cycle.	Evacuate repeatedly and recharge system.
	Engine tends to overheat.	Engine cooling systems malfunction.	Check and repair each engine cooling system.
	• An area of the low-pressure pipe is colder than areas near the evaporator outlet. • Plates are sometimes covered with frost.	• Excessive liquid refrigerant on low-pressure side. • Excessive refrigerant discharge flow. • Expansion valve is open a little compared with the specification. ↓ ① Improper thermal valve installation. ② Improper expansion valve adjustment.	Replace expansion valve.
High-pressure side is too high and low-pressure side is too low. **B** 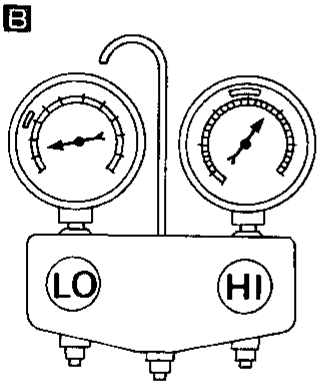 AC360A	Upper side of condenser and high-pressure side are hot, however, liquid tank is not so hot.	High-pressure tube or parts located between compressor and condenser are clogged or crushed.	• Check and repair or replace malfunctioning parts. • Check lubricant for contamination.

Trouble Diagnoses for Abnormal Pressure (Cont'd)

Gauge indication	Refrigerant cycle	Probable cause	Corrective action
High-pressure side is too low and low-pressure side is too high. C 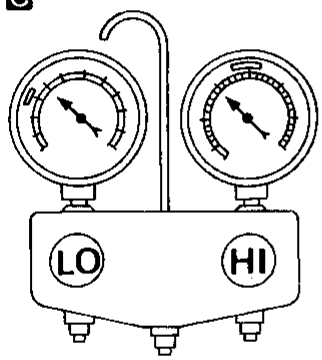 AC356A	High and low-pressure sides become equal soon after compressor operation stops.	Compressor pressure operation is improper. ↓ Damaged inside compressor packings.	Replace compressor.
	No temperature difference between high and low-pressure sides.	Compressor pressure operation is improper. ↓ Damaged inside compressor packings.	Replace compressor.
Both high and low-pressure sides are too low. D 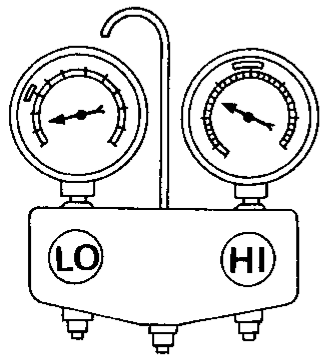 AC353A	• There is a big temperature difference between receiver drier outlet and inlet. Outlet temperature is extremely low. • Liquid tank inlet and expansion valve are frosted.	Liquid tank inside is clogged a little.	• Replace liquid tank. • Check lubricant for contamination.
	• Temperature of expansion valve inlet is extremely low as compared with areas near liquid tank. • Expansion valve inlet may be frosted. • Temperature difference occurs somewhere in high-pressure side.	High-pressure pipe located between liquid tank and expansion valve is clogged.	• Check and repair malfunctioning parts. • Check lubricant for contamination.
	• Expansion valve and liquid tank are warm or only cool when touched.	Low refrigerant charge. ↓ Leaking fittings or components.	Check refrigerant for leaks. Refer to "Checking Refrigerant Leaks", HA-44.
Both high and low-pressure sides are too low. D 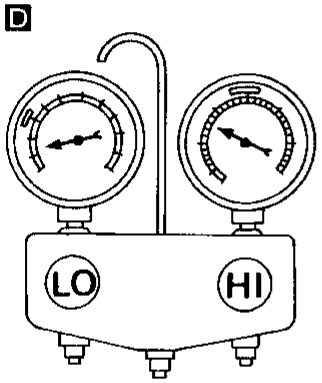 AC353A	There is a big temperature difference between expansion valve inlet and outlet while the valve itself is frosted.	Expansion valve closes a little compared with the specification. ↓ ① Improper expansion valve adjustment. ② Malfunctioning thermal valve. ③ Outlet and inlet may be clogged.	• Remove foreign particles by using compressed air. • Check lubricant for contamination.
	An area of the low-pressure pipe is colder than areas near the evaporator outlet.	Low-pressure pipe is clogged or crushed.	• Check and repair malfunctioning parts. • Check lubricant for contamination.
	Air flow volume is not enough or is too low.	Compressor pressure operation is improper.	Replace compressor.

Trouble Diagnoses for Abnormal Pressure (Cont'd)

Gauge indication	Refrigerant cycle	Probable cause	Corrective action
Low-pressure side sometimes becomes negative. E 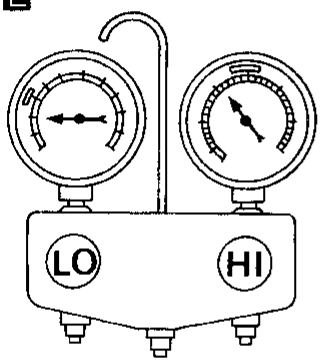 AC354A	● Air conditioner system does not function and does not cyclically cool the compartment air. ● The system constantly functions for a certain period of time after compressor is stopped and restarted.	Refrigerant does not discharge cyclically. ↓ Moisture is frozen at expansion valve outlet and inlet. ↓ Water is mixed with refrigerant.	● Drain water from refrigerant or replace refrigerant. ● Replace liquid tank.
Low-pressure side becomes negative. F 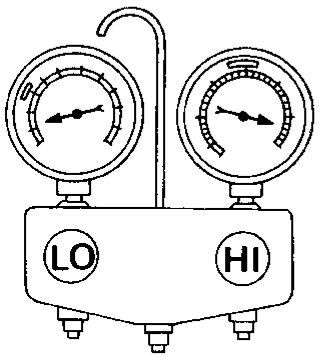 AC362A	Liquid tank or front/rear side of expansion valve's pipe is frosted or dewed.	High-pressure side is closed and refrigerant does not flow. ↓ Expansion valve or liquid tank is frosted.	Leave the system at rest. Start it again to check whether or not the problem is caused by water or foreign particles. ● If water is the cause, initially cooling is okay. Then the water freezes, causing a blockage. Drain water from refrigerant or replace refrigerant. ● If due to foreign particles, remove expansion valve and remove the particles with dry and compressed air. ● If either of the above methods cannot correct the problem, replace expansion valve. ● Replace liquid tank. ● Check lubricant for contamination.

Harness Layout

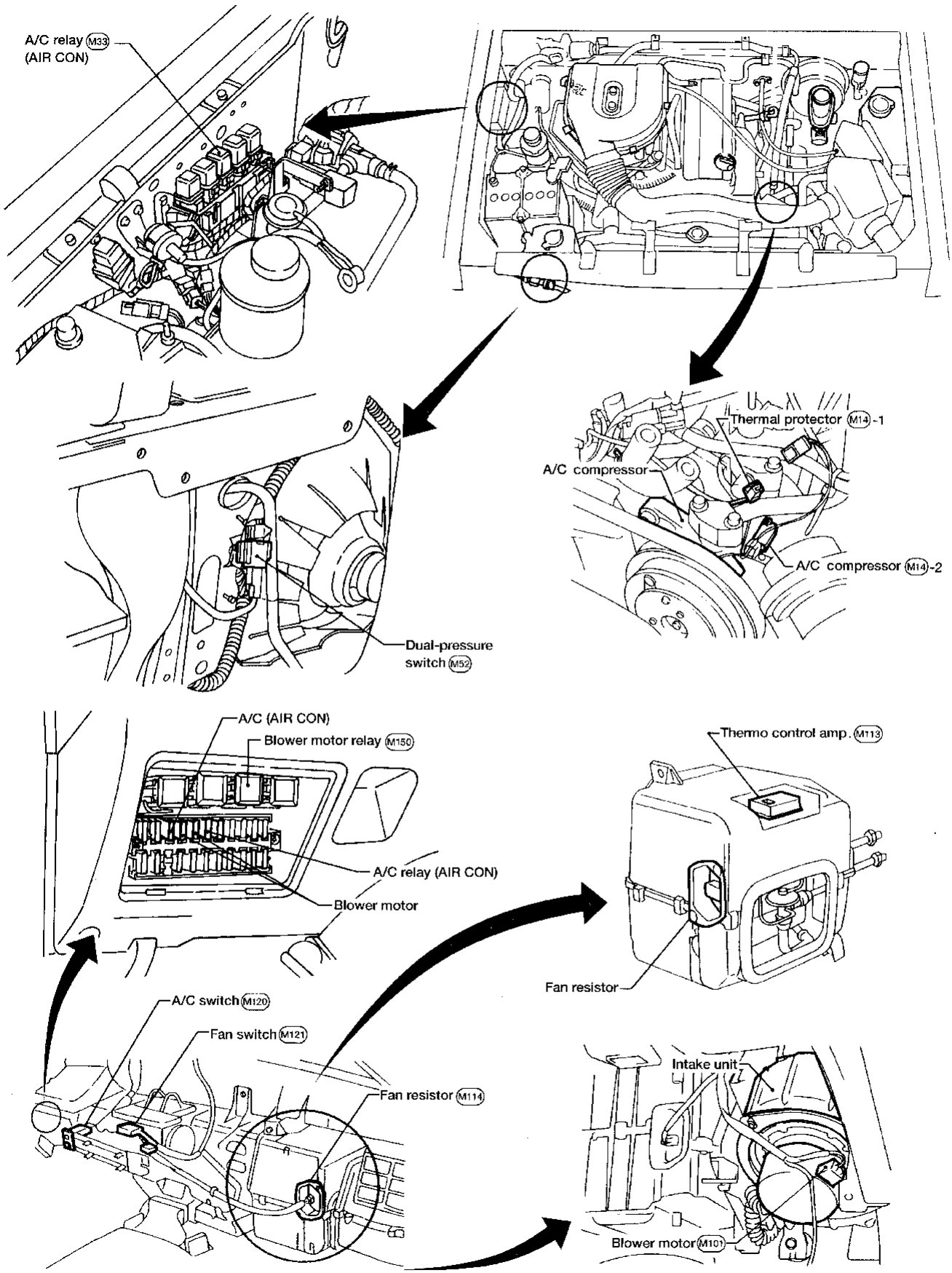

AHA822

Circuit Diagram

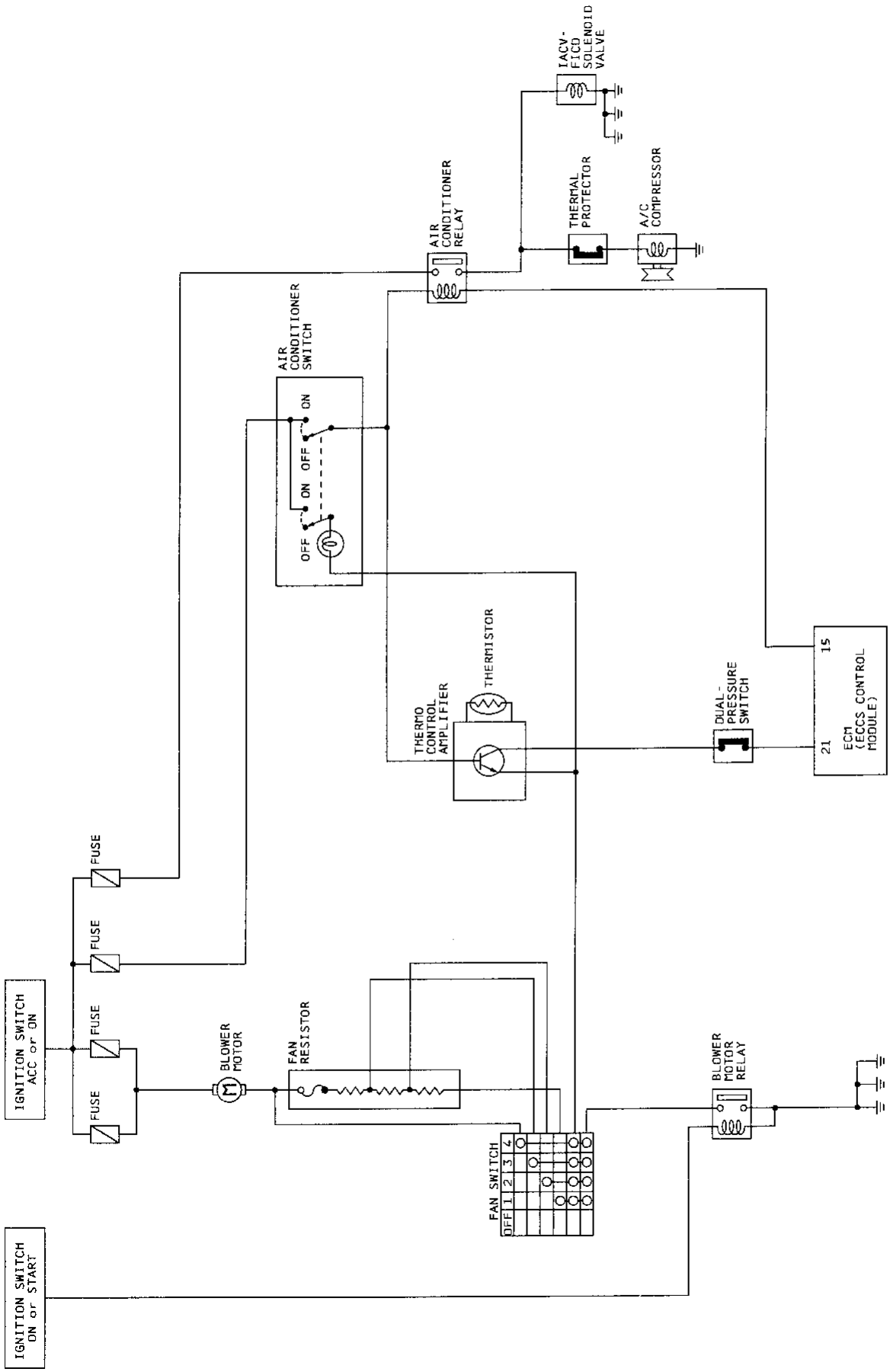

AHA693

Wiring Diagram –HEATER–

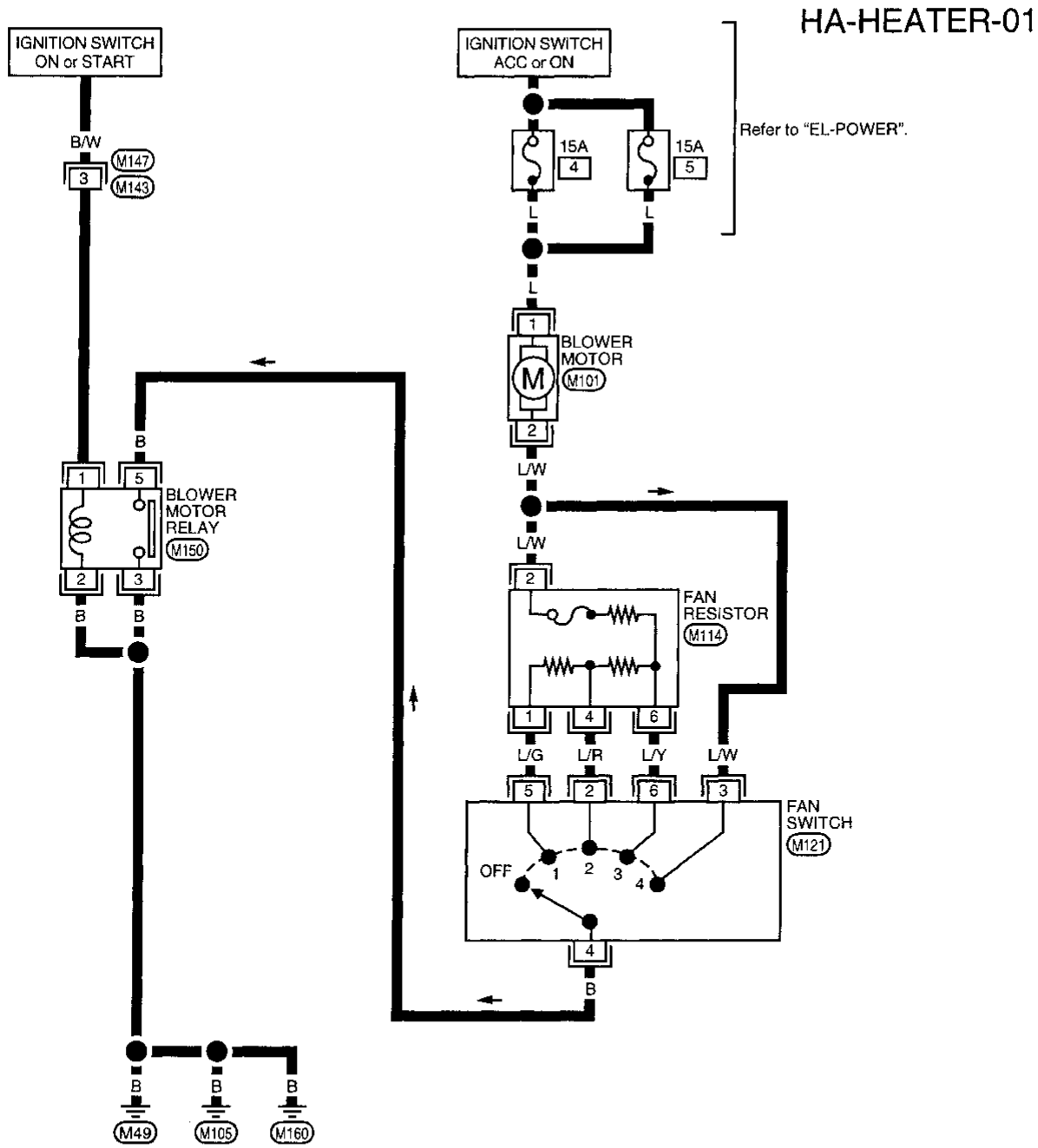

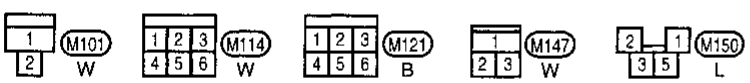

AHA691

Wiring Diagram –A/C–

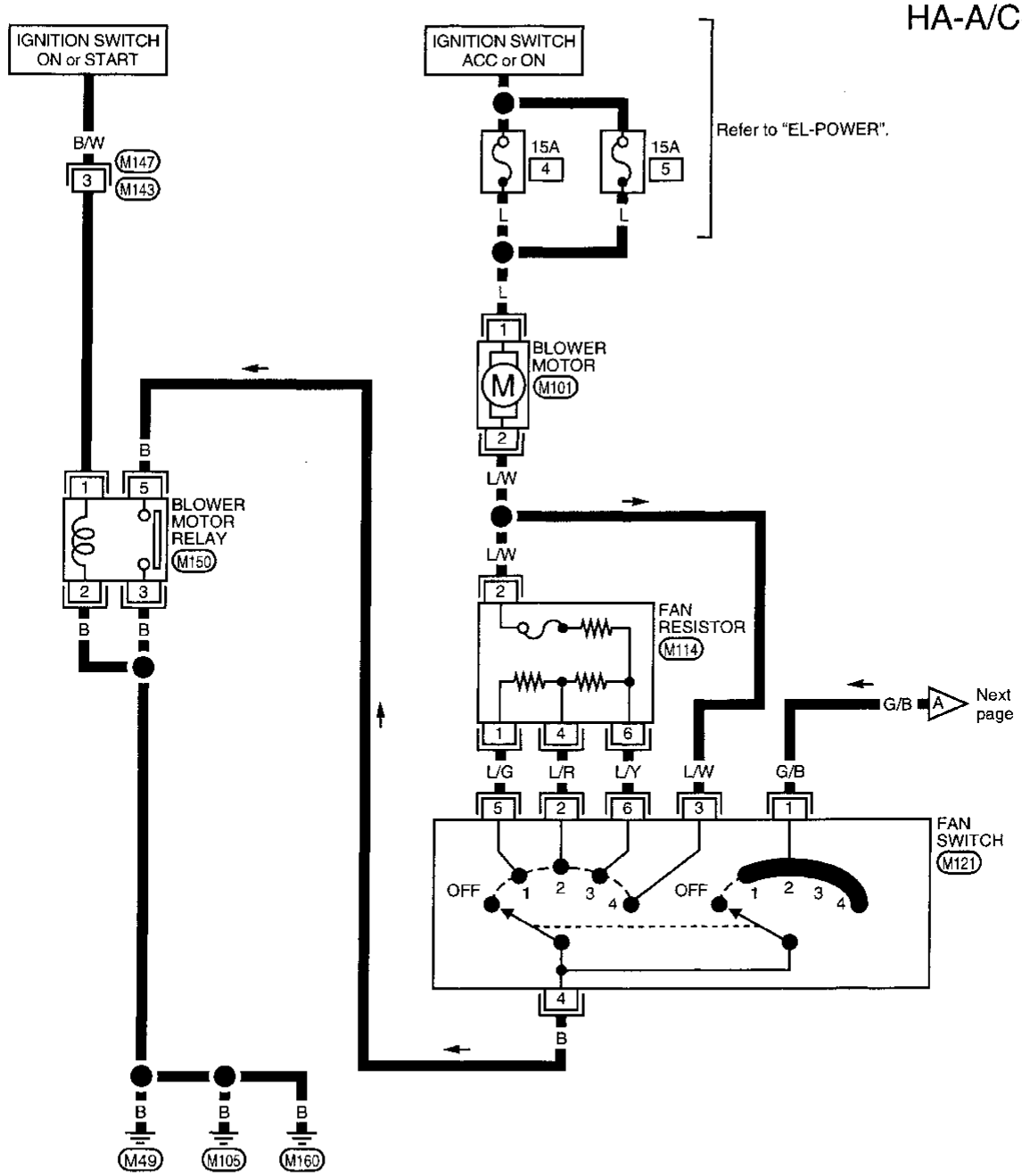

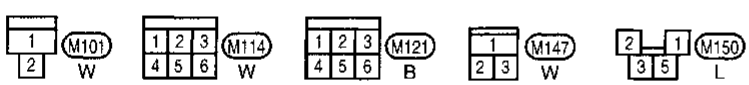

AHA692-A

Wiring Diagram –A/C– (Cont'd)

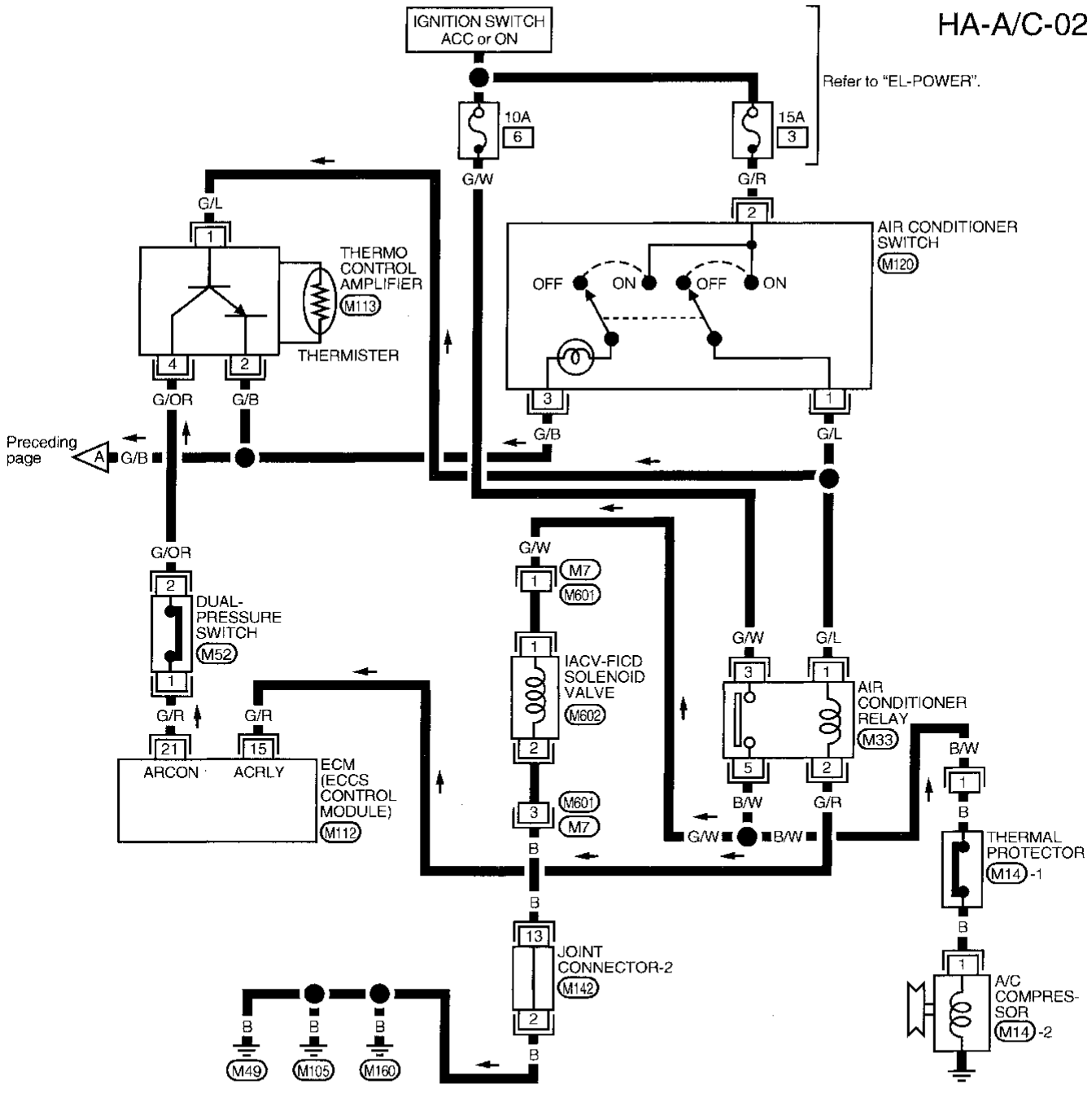

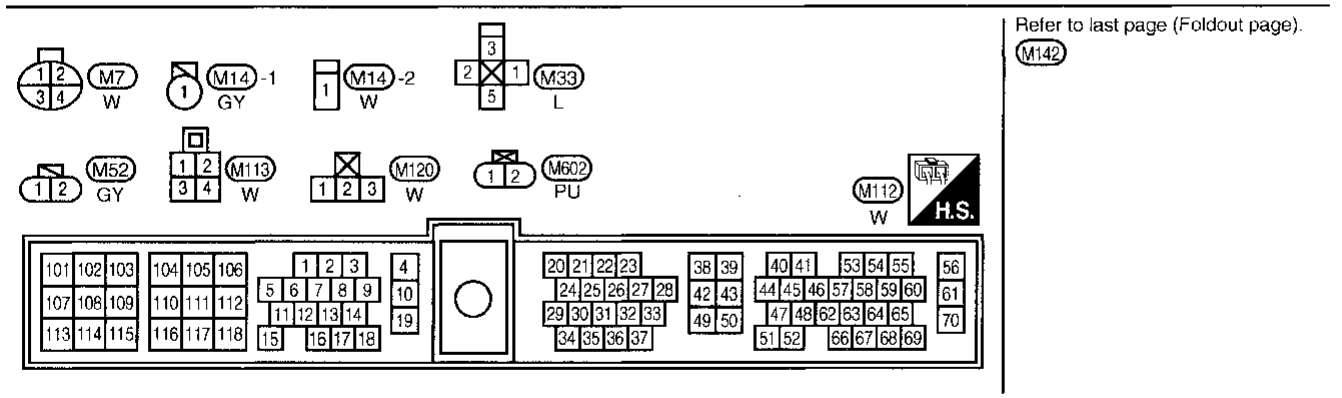

AHA959

Main Power Supply and Ground Circuit Check

POWER SUPPLY CIRCUIT CHECK FOR A/C SYSTEM

Check power supply circuit for air conditioner system.

Refer to "POWER SUPPLY ROUTING" in EL section and "Wiring Diagram".

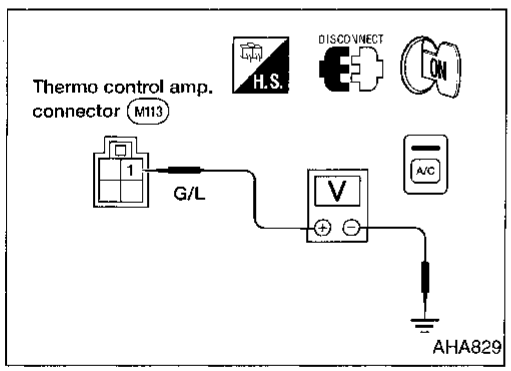

THERMO CONTROL AMP. CHECK

Check power supply circuit for thermo control amp. with ignition switch ON and air conditioner switch ON.

1. Disconnect thermo control amp. harness connector.
2. Connect voltmeter from harness side.
3. Measure voltage across terminal No. ① and body ground.

Voltmeter terminal		Voltage
⊕	⊖	
①	Body ground	Approx. 12V

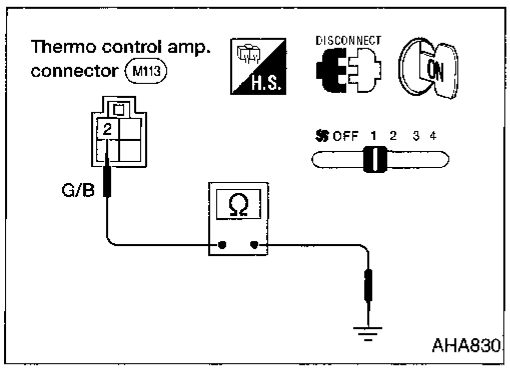

Check body ground circuit for thermo control amp. with ignition switch ON and fan switch ON.

1. Disconnect thermo control amp. harness connector.
2. Connect ohmmeter from harness side.
3. Check for continuity between terminal No. ② and body ground.

Ohmmeter terminal		Continuity
⊕	⊖	
②	Body ground	Yes

	INCIDENT	Flow chart No.
1	Fan fails to rotate.	1
2	Fan does not rotate at 1-speed.	2
3	Fan does not rotate at 2-speed.	3
4	Fan does not rotate at 3-speed.	4
5	Fan does not rotate at 4-speed.	5

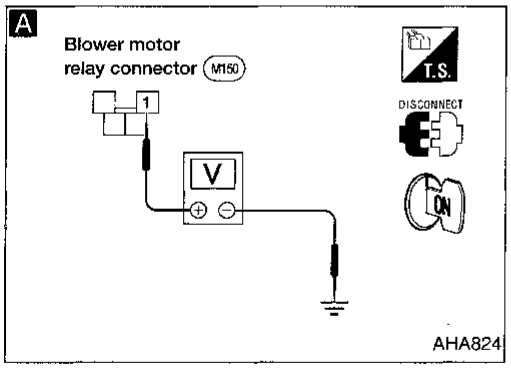

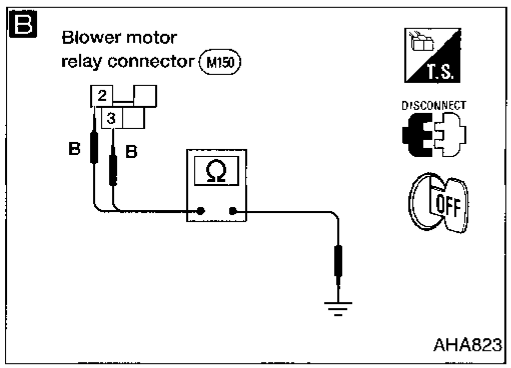

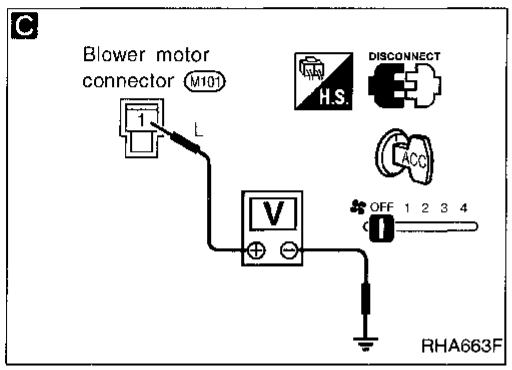

Diagnostic Procedure 1

SYMPTOM: Blower motor does not rotate.

- **Perform PRELIMINARY CHECK 1 before referring to the following flow chart.**

Check if blower motor rotates properly at each fan speed.
Conduct check as per flow chart at left.

2 3 4 → Ⓑ

5 → Ⓒ

A 1

CHECK POWER SUPPLY FOR BLOWER MOTOR RELAY.
Do approx. 12 volts exist between blower motor relay harness terminal No. ① and body ground?

No → Check circuit between ignition switch and blower motor relay. (Refer to "POWER SUPPLY ROUTING" in EL section and Wiring Diagram.) (Go to HA-36.)

Yes ↓

B Note

Check circuit continuity between blower motor relay harness terminals No. ②, ③ and body ground.

OK ↓

CHECK BLOWER MOTOR RELAY AFTER DISCONNECTING IT.
Refer to HA-42.

NG → Replace blower motor relay.

OK ↓

Reconnect blower motor relay.

C

CHECK POWER SUPPLY FOR BLOWER MOTOR.
Disconnect blower motor harness connector.
Do approx. 12 volts exist between blower motor harness terminal No. ① and body ground?

No → Check power supply circuit and 15A fuses (No. 4 and 5, located in the fuse block).

Yes ↓

Ⓐ
(Go to next page.)

Note:
If the result is NG after checking circuit continuity, repair harness or connector.

Diagnostic Procedure 1 (Cont'd)

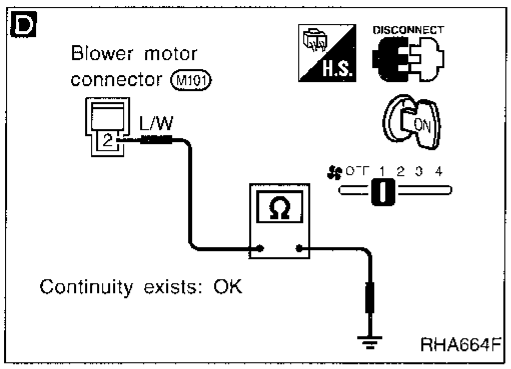

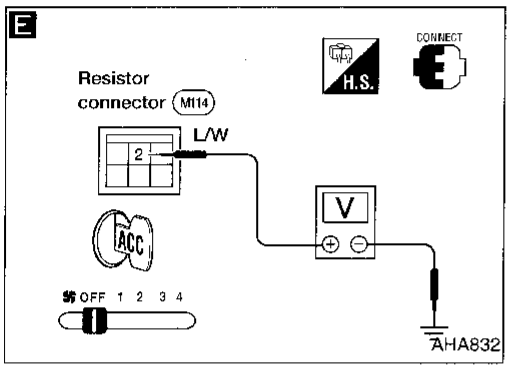

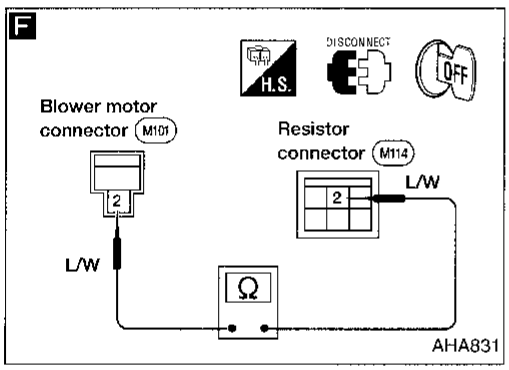

Ⓐ

D

Check circuit continuity between blower motor harness terminal No. ② and body ground.

- OK → CHECK BLOWER MOTOR. Refer to HA-41.
  - NG → Replace blower motor.
- NG → Reconnect blower motor harness connector.

E

CHECK BLOWER MOTOR CIRCUIT BETWEEN BLOWER MOTOR AND RESISTOR.
Do approx. 12 volts exist between resistor harness terminal No. ② and body ground?

- No → Disconnect blower motor and resistor harness connectors.

F Note

Check circuit continuity between blower motor harness terminal No. ② and resistor harness terminal No. ②.
Continuity should exist.
If OK, check harness for short.

- Yes → Ⓓ

(Go to next page.)

Note:
If the result is NG after checking circuit continuity, repair harness or connector.

Diagnostic Procedure 1 (Cont'd)

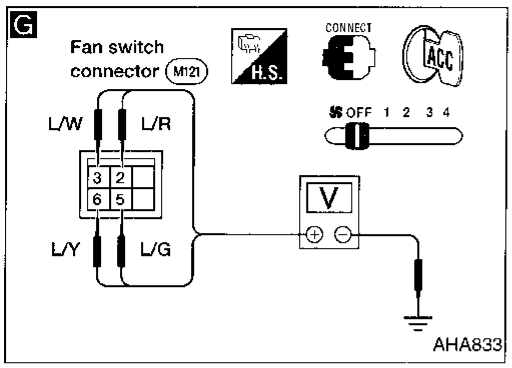

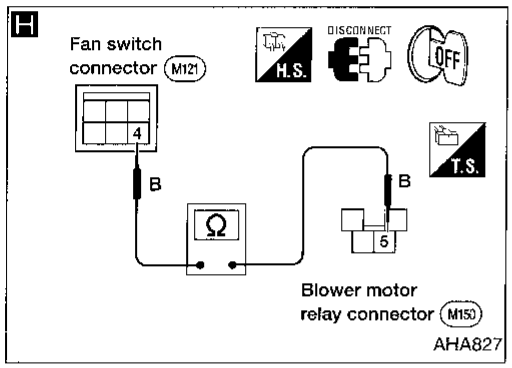

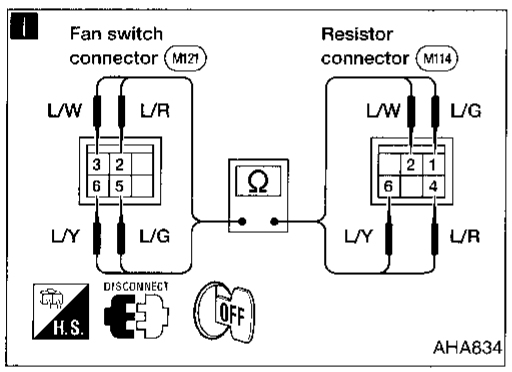

Ⓓ 1 → CHECK RESISTOR AFTER DISCONNECTING IT. Refer to HA-41.

Ⓑ 2 3 4 → CHECK RESISTOR AFTER DISCONNECTING IT. Refer to HA-41.

- OK → Reconnect resistor harness connector.
- NG → Replace resistor.

Reconnect resistor harness connector.

- 1 → CHECK FAN SWITCH AFTER DISCONNECTING IT. Refer to HA-41.
- 2 3 4 → G
- Ⓒ 5 → G

G

CHECK FAN SWITCH CIRCUIT.
Do approx. 12 volts exist between each fan switch harness terminal and body ground?

Flow chart No.	Terminal No. ⊕	Terminal No. ⊖	Voltage
2	⑤	Body ground	Approx. 12V
3	②		
4	⑥		
5	③		

- Yes → 2 3 4 5 → CHECK FAN SWITCH AFTER DISCONNECTING IT. Refer to HA-41.
- No → I

I Note

Check circuit continuity between fan switch and resistor.

Terminal No. Fan switch	Terminal No. Resistor	Continuity
⑤	①	Yes
②	④	
⑥	⑥	
③	②	

If OK, check harness for short.

CHECK FAN SWITCH AFTER DISCONNECTING IT. Refer to HA-41.

- NG → Replace fan switch.
- OK → H

H Note

Check circuit continuity between fan switch harness terminal No. ④ and blower motor relay harness terminal No. ⑤.

Note:
If the result is NG after checking circuit continuity, repair harness or connector.

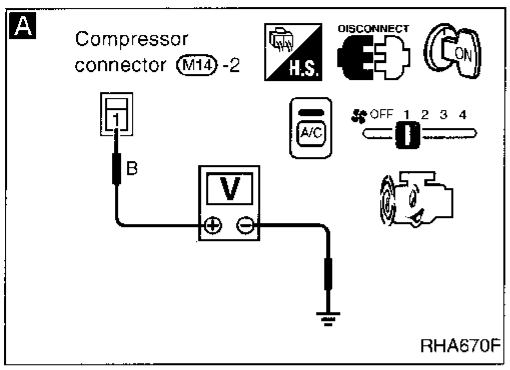

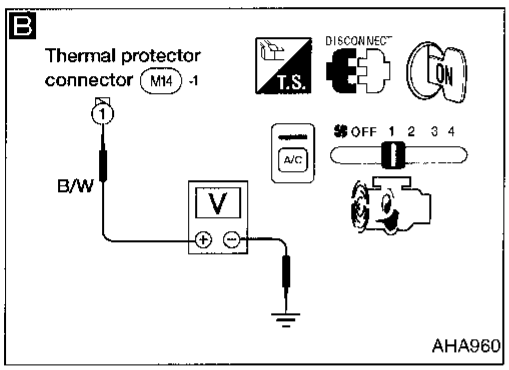

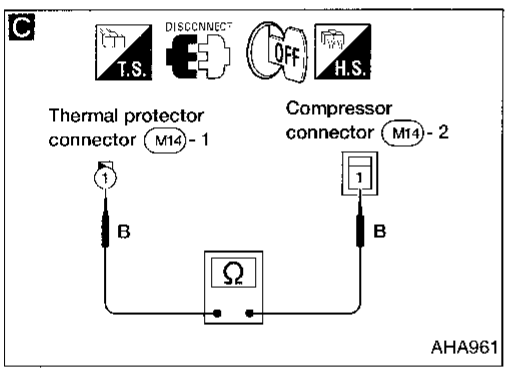

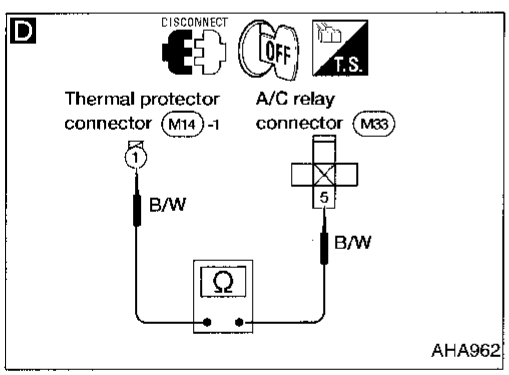

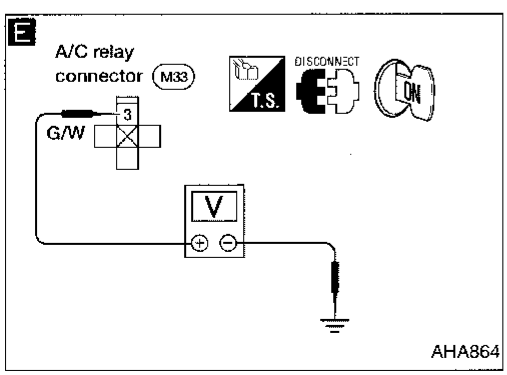

Diagnostic Procedure 2

SYMPTOM: Magnet clutch does not engage when A/C switch and fan switch are ON.

- **Perform PRELIMINARY CHECK 1 before referring to the following flow chart.**

A

CHECK POWER SUPPLY FOR COMPRESSOR.
Disconnect compressor harness connector.
Do approx. 12 volts exist between compressor harness terminal No. ① and body ground?

Yes → Check magnet clutch coil → NG → Replace magnet clutch. Refer to HA-53

No ↓

B

CHECK POWER SUPPLY FOR THERMAL PROTECTOR.
Disconnect thermal protector harness connector.
Do approx. 12 volts exist between thermal protector harness terminal No. ① and body ground?

Yes → **C** Note: CHECK THERMAL PROTECTOR.
Check circuit continuity between thermal protector harness connector terminal No. ① and compressor harness terminal No. ①.
Continuity should exist.
If OK, check harness for short

NG → Replace thermal protector.

No ↓

D Note

Check circuit continuity between A/C relay harness terminal No. ⑤ and thermal protector harness terminal No. No. ①.
Continuity should exist.
If OK, check harness for short.

OK ↓

E

CHECK POWER SUPPLY FOR A/C RELAY.
Do approx. 12 volts exist between A/C relay harness terminal No. ③ and body ground?

No → Check power supply circuit and 10A fuse (No. 6 , located in the fuse block). (Refer to "POWER SUPPLY ROUTING" in EL section and Wiring Diagram.)

Yes ↓

Ⓐ

(Go to next page.)

Note:
If the result is NG after checking circuit continuity, repair harness or connector.

Diagnostic Procedure 2 (Cont'd)

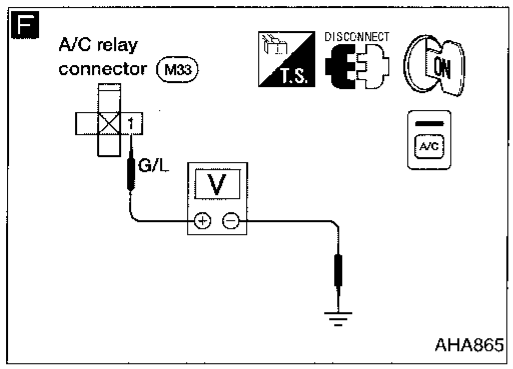

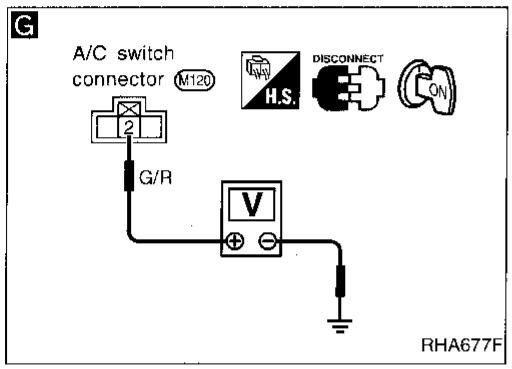

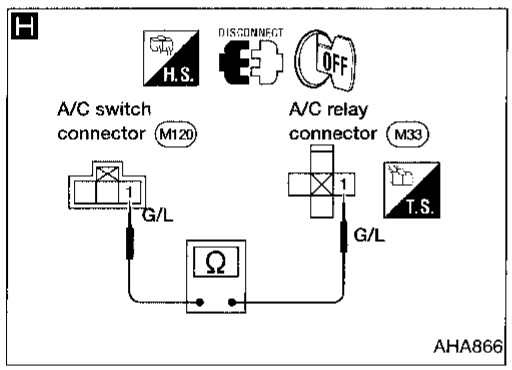

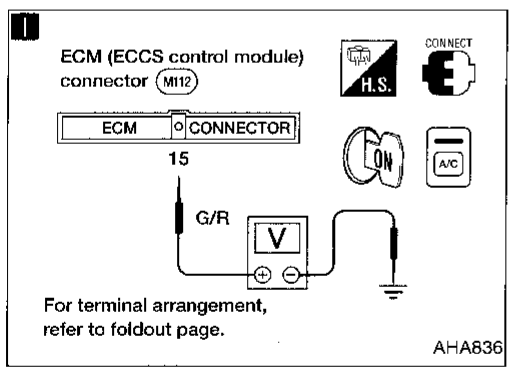

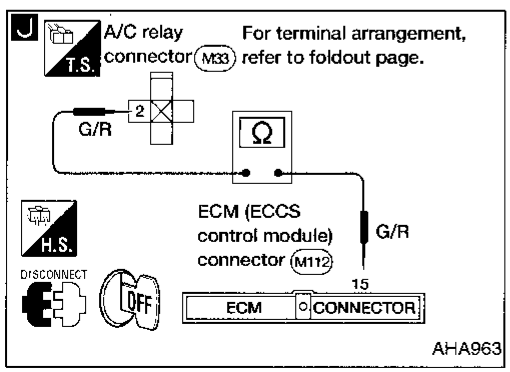

Ⓐ

F

CHECK POWER SUPPLY FOR A/C RELAY.
Do approx. 12 volts exist between A/C relay harness terminal No. ① and body ground?

Yes → (Go to Ⓑ below.)

No ↓

G

CHECK POWER SUPPLY FOR A/C SWITCH.
Disconnect A/C switch harness connector.
Do approx. 12 volts exist between A/C switch harness terminal No. ② and body ground?

No → Check power supply circuit and 15A fuse (No. 3, located in the fuse block). (Refer to "POWER SUPPLY ROUTING" in EL section and Wiring Diagram.

Yes ↓

CHECK A/C SWITCH.
Refer to HA-41.

NG → Replace A/C switch.

OK ↓

H Note

Check circuit continuity between A/C switch harness terminal No. ① and A/C relay harness terminal No. ①.
Continuity should exist.
If OK, check harness for short.

Ⓑ

CHECK A/C RELAY AFTER DISCONNECTING IT.
Refer to HA-42.

NG → Replace A/C relay.

OK ↓

Reconnect A/C relay.

I

CHECK COIL SIDE CIRCUIT OF A/C RELAY.
Disconnect ECM (ECCS control module) harness connector.
Do approx. 12 volts exist between ECM (ECCS control module) harness terminal No. ⑮ and body ground?

No → **J** Note

Check circuit continuity between A/C relay harness terminal No. ② and ECM (ECCS control module) harness terminal No. ⑮.
Continuity should exist.
If OK, check harness for short.

Yes ↓

Reconnect ECM (ECCS control module) harness connector.

Ⓒ

(Go to next page.)

Note:
If the result is NG after checking circuit continuity, repair harness or connector.

Diagnostic Procedure 2 (Cont'd)

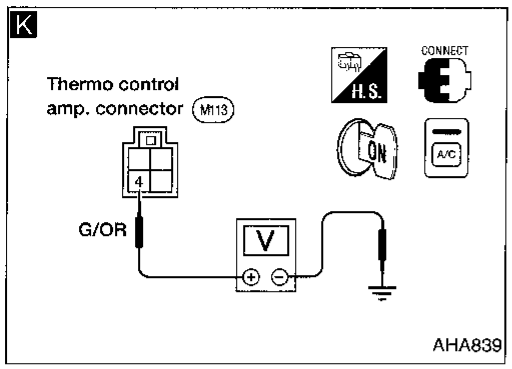

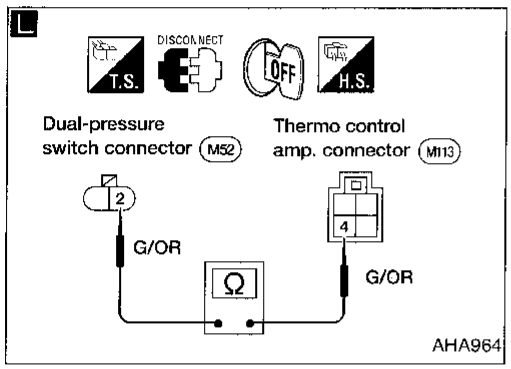

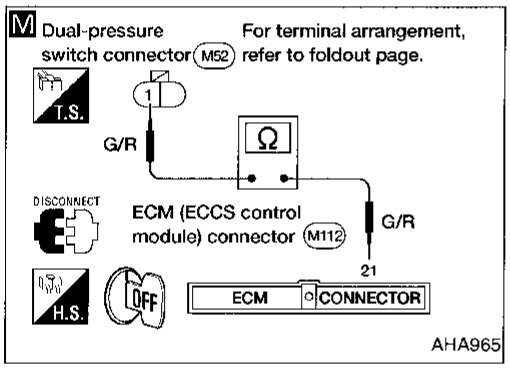

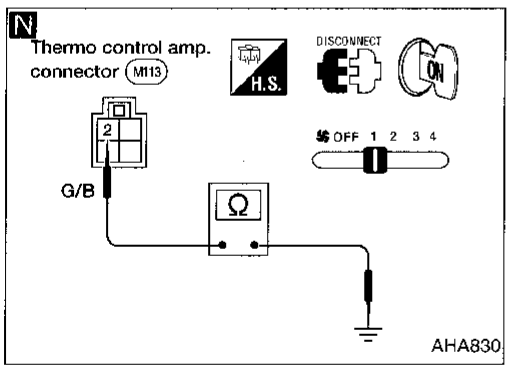

Ⓒ

K

CHECK VOLTAGE FOR THERMO CONTROL AMP.
Do approx. 5 volts exist between thermo control amp. harness terminal No. ④ and body ground?

Yes → (Go to Ⓓ below.)

No ↓

L

Check circuit continuity between thermo control amp. harness terminal No. ④ and dual-pressure switch terminal No. ②.
Continuity should exist.
If OK, check harness for short

OK ↓

CHECK DUAL-PRESSURE SWITCH.
Refer to HA-41.

NG → Replace dual-pressure switch.

OK ↓

M Note

Check circuit continuity between ECM (ECCS control module) harness terminal No. ㉑ and dual-pressure switch harness terminal No. ①.
Continuity should exist.
If OK, check harness for short.

OK ↓

CHECK ECM (ECCS CONTROL MODULE).
Refer to EC section.

Ⓓ

CHECK POWER SUPPLY FOR THERMO CONTROL AMP.
Refer to HA-33.

N

CHECK BODY GROUND CIRCUIT FOR THERMO CONTROL AMP.
Disconnect thermo control amp. harness connector.
Does continuity exist between thermo control amp. harness terminal No. ② and body ground?

Yes → Replace thermo control amp.

No ↓

Ⓔ

(Go to next page.)

Note:
If the result is NG after checking circuit continuity, repair harness or connector.

Diagnostic Procedure 2 (Cont'd)

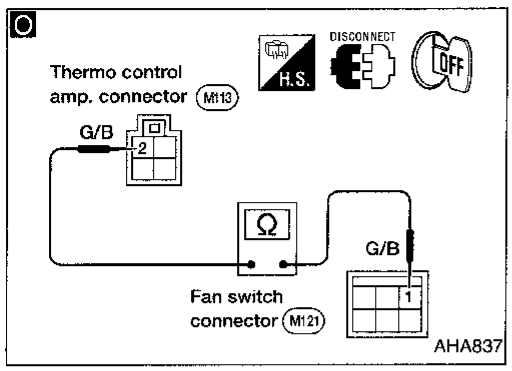

(E)

Disconnect fan switch harness connector.

Note

Check circuit continuity between thermo control amp. harness terminal No. (2) and fan switch harness terminal No. (1).
Continuity should exist.
If OK, check harness for short.

OK

CHECK FAN SWITCH.
Refer to HA-41.

NG

Replace fan switch.

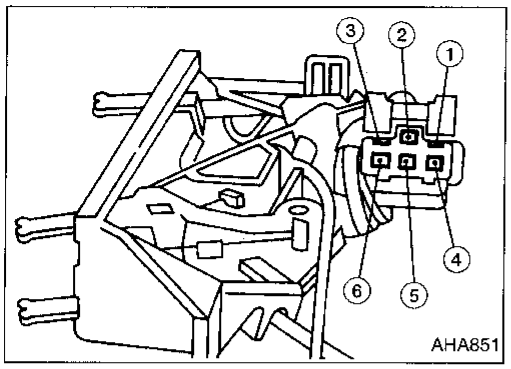

Electrical Components Inspection

FAN SWITCH

Check continuity between terminals at each lever position.

TERMINAL \ LEVER POSITION	OFF	1	2	3	4
3					○
5		○			
2			○		
6				○	
4		○	○	○	○
1		○	○	○	○

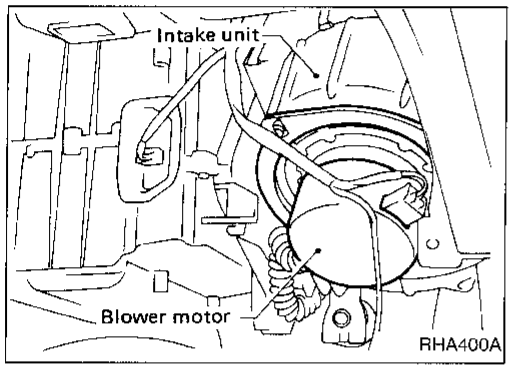

BLOWER MOTOR

Confirm smooth rotation of the blower motor.

- Check that there are no foreign particles inside the intake unit.

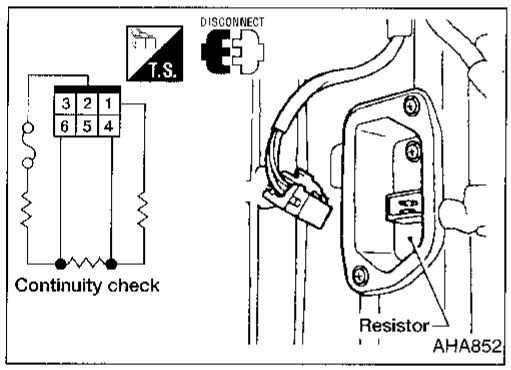

BLOWER RESISTOR

Check continuity between terminals.

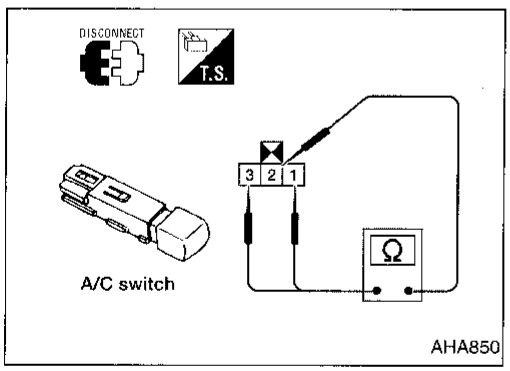

A/C SWITCH

Check continuity between terminals at each switch position.

	ON	OFF
2	○ ○	
1	○ ⊕	
3	○	

A/C indicator lamp

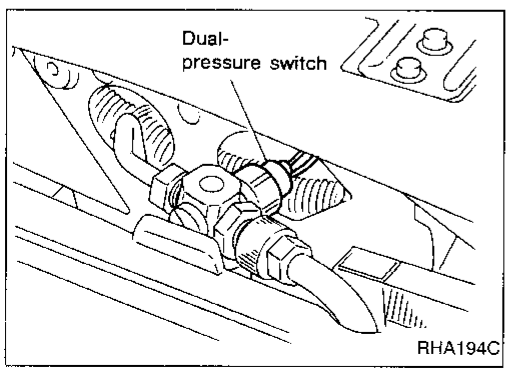

DUAL-PRESSURE SWITCH

High-pressure side line pressure kPa (kg/cm^2, psi)	Operation	Continuity
Decreasing to 157 - 216 (1.6 - 2.2, 23 - 31) Increasing to 2,648 - 2,844 (27 - 29, 384 - 412)	Turn OFF	Does not exist
Increasing to 157 - 235 (1.6 - 2.4, 23 - 34) Decreasing to 392 - 785 (4 - 8, 57 - 114)	Turn ON	Exists

Electrical Components Inspection (Cont'd)

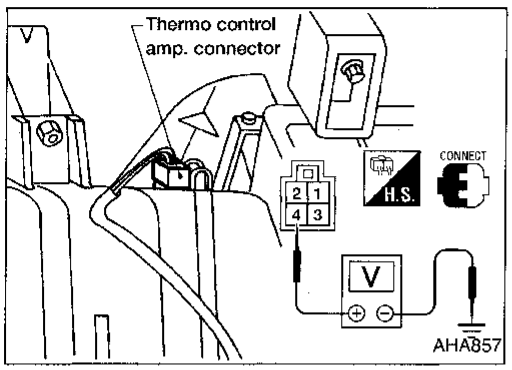

THERMO CONTROL AMP.

Evaporator outlet air temperature °C (°F)	Thermo amp. operation	Tester
Decreasing to 0.1 - 0.9 (32 - 34)	Turn OFF	Approx. 12V
Increasing to 2.5 - 3.5 (37 - 38)	Turn ON	Approx. 0V

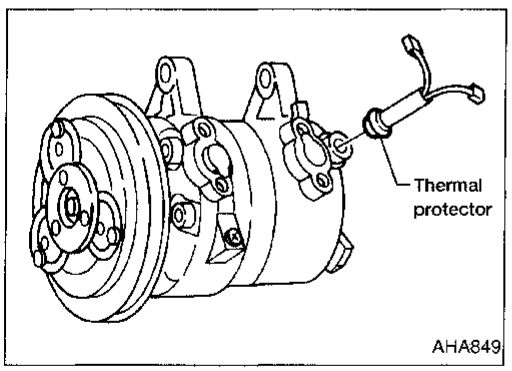

THERMAL PROTECTOR

Temperature of compressor °C (°F)	Operation
Increasing to approx. 145 - 155 (293 - 311)	Turn OFF
Decreasing to approx. 130 - 140 (266 - 284)	Turn ON

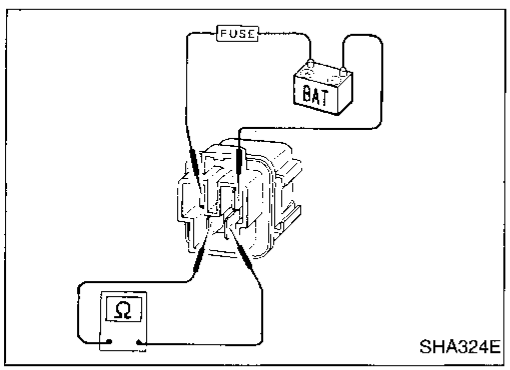

A/C RELAY AND BLOWER MOTOR RELAY

Check circuit continuity between terminals by supplying 12 volts to coil side terminals of relay.

- Blower motor relay

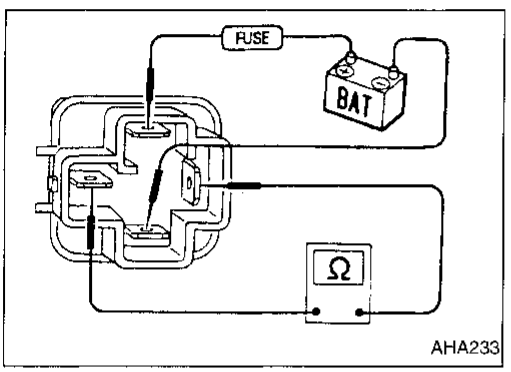

- A/C relay

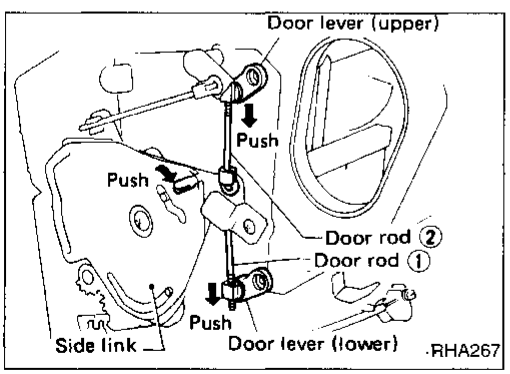

Control Linkage Adjustment

VENTILATOR DOOR CONTROL ROD

1. Move side link in direction of arrow.
2. With upper and lower ventilator door levers held in the direction of the arrow, connect rods ① and ② to their corresponding ventilator door levers in that order.

Control Linkage Adjustment (Cont'd)

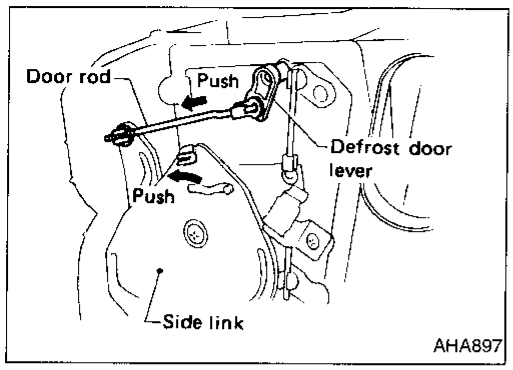

DEFROST DOOR CONTROL ROD

1. Move side link in direction of arrow.
2. Connect rod to side link while pushing defrost door lever in direction of arrow.

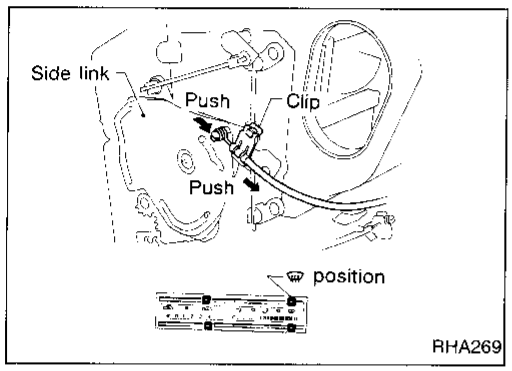

MODE CONTROL CABLE

- Move mode control lever to position.
  Set side link in DEF mode.
  Pull on outer cable in direction of arrow and then clamp it.
- **After positioning mode control cable, check that it operates properly.**

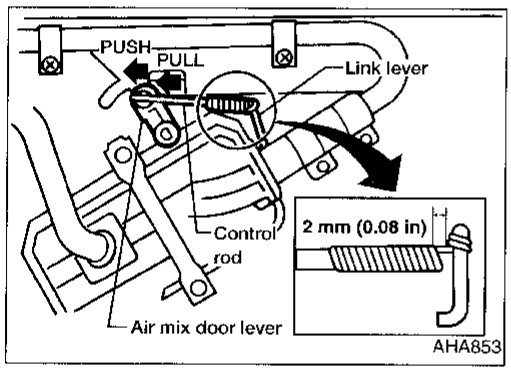

WATER COCK CONTROL ROD

- **When adjusting water cock control rod, first disconnect temperature control cable from air mix door lever and then adjust control rod. Reconnect temperature control cable and readjust it. (Refer to next item.)**

1. Push air mix door lever in direction of arrow.
2. Pull control rod of water cock in direction of arrow so as to make clearance of about 2 mm (0.08 in) between ends of rod and link lever and connect the rod to door lever.

- **After connecting water cock control rod, check that it operates properly.**

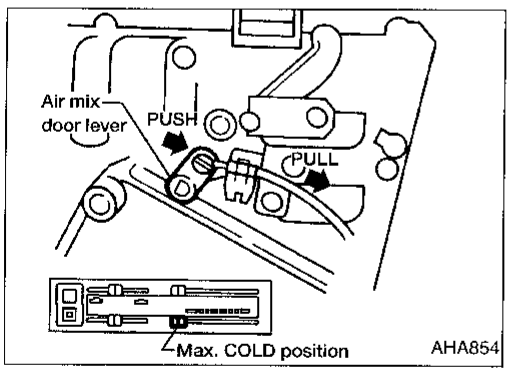

TEMPERATURE CONTROL CABLE

- **When adjusting ventilator door rod and defrost door rod, first disconnect mode control cable from side link. Reconnect and readjust mode control cable.**
- Move temperature control lever to max. COLD position. Set air mix door lever in full hot mode. Pull on outer cable in direction of arrow and then clamp it.
- **After positioning temperature control cable, check that it operates properly.**

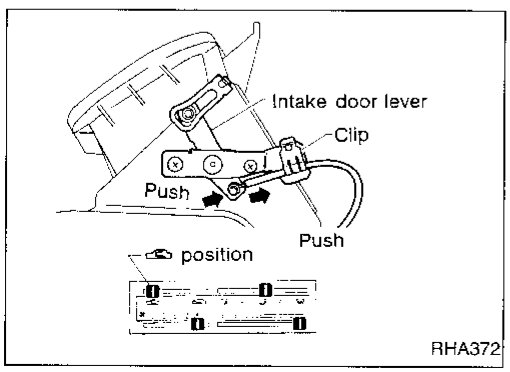

RECIRCULATION CONTROL CABLE

- Move recirculation lever to position.
  Set recirculation lever in REC mode.
  Pull on outer cable in direction of arrow and then clamp it.
- **After positioning recirculation control cable, check that it operates properly.**

Checking Refrigerant Leaks

PRELIMINARY CHECK

Perform a visual inspection of all refrigeration parts, fittings, hoses, and components for signs of A/C lubricant leakage, damage and corrosion.

PRECAUTIONS FOR HANDLING LEAK DETECTOR

When performing a refrigerant leak check, use a J39400 A/C leak detector or equivalent. Ensure that the instrument is calibrated and set properly per the operating instructions.
The leak detector is a delicate device. In order to use the leak detector properly, read the operating instructions and perform any specified maintenance.
Other gases in the work area or substances on the A/C components, for example, anti-freeze, windshield washer fluid, solvents and cleaners, may falsely trigger the leak detector. Make sure the surfaces to be checked are clean. Do not allow the sensor tip of the detector to come into contact with any substance. This can also cause false readings and may damage the detector.

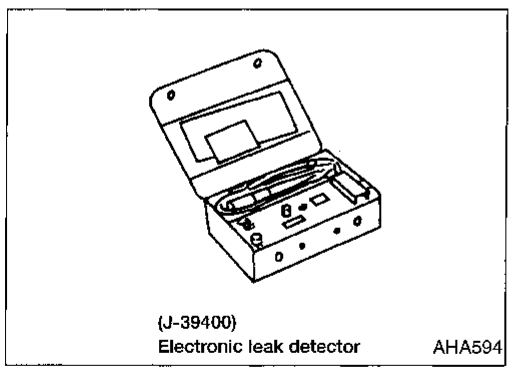

1. Position probe approximately 5 mm (3/16 in) away from point to be checked.

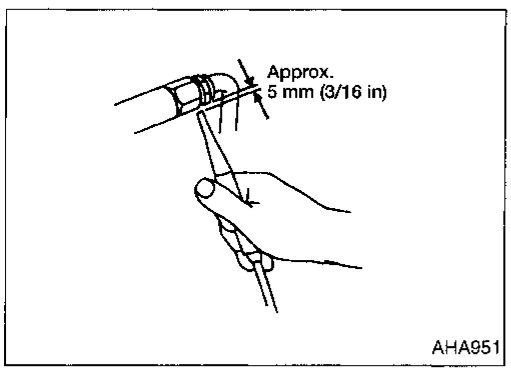

2. When testing, circle each fitting completely with probe.

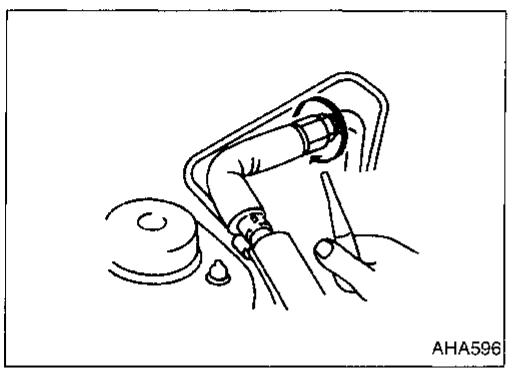

3. Move probe along component approximately 25 - 50 mm (1-2 in)/sec.

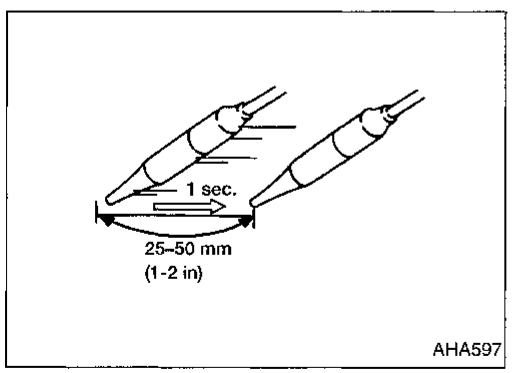

Checking Refrigerant Leaks (Cont'd)

CHECKING PROCEDURE

To prevent inaccurate or false readings, make sure there is no refrigerant vapor or tobacco smoke in the vicinity of the vehicle. Perform the leak test in calm area (low air/wind movement) so that the leaking refrigerant is not dispersed.

1. Turn engine off.
2. Connect a suitable A/C manifold gauge set to the A/C service ports.
3. Check if the A/C refrigerant pressure is at least 345 kPa (50 psi) above 16°C (60°F). If less than specification, evacuate and recharge the system with the specified amount of refrigerant.
   NOTE: At temperatures below 16°C (60°F), leaks may not be detected since the system may not reach 345 kPa (50 psi).
4. Conduct the leak test from the high side to the low side at points ⓐ through ⓘ. Refer to HA-47.
   Perform a leak check for the following areas carefully. Clean the component to be checked and move the leak detector probe completely around the connection/component.
   - **Compressor**
   Check the fittings of high and low pressure hoses, relief valve, and shaft seal.
   - **Liquid tank**
   Check the pressure switch, tube fitting, weld seams and the fusible plug mounts.
   - **Service valves**
   Check all around the service valves. Ensure service valve caps are secured on the service valves (to prevent leaks).
   NOTE: After removing A/C manifold gauge set from service valves, wipe any residue from valves to prevent any false readings by leak detector.
   - **Cooling unit (Evaporator)**
   Turn blower fan on "High" for at least 15 seconds to dissipate any refrigerant trace in the cooling unit. Insert the leak detector probe into the drain hose immediately after stopping engine. (Keep the probe inserted for at least ten seconds.)
5. If a leak detector detects a leak, verify at least once by blowing compressed air into area of suspected leak, then repeat check.
6. Do not stop when one leak is found. Continue to check for additional leaks at all system components.

Checking Refrigerant Leaks (Cont'd)

7. Start engine.
8. Set the heater A/C control as follows:
   a. A/C switch ON
   b. Face mode
   c. Recirculation switch ON
   d. Max cold temperature
   e. Fan speed high
9. Run engine at 1500 rpm for at least 2 minutes.
10. Turn engine off and perform leak check again following steps 4 through 6 on the previous page.

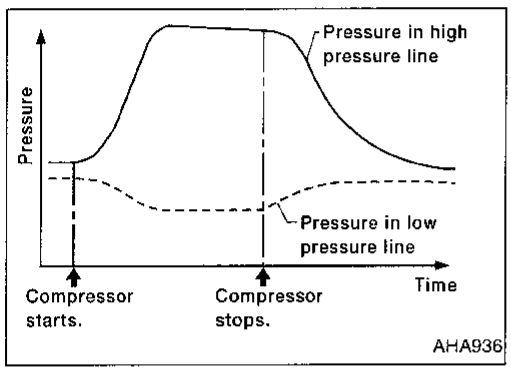

Refrigerant leaks should be checked immediately after stopping the engine. Begin with the leak detector on the high pressure line. The pressure in the high pressure line will gradually drop after refrigerant circulation stops and pressure in the low pressure line will gradually rise, as shown in the graph. Leaks are more easily detected when pressure is high.

11. Discharge A/C system using approved refrigerant recovery equipment. Repair the leaking fitting or component as necessary.
12. Evacuate and recharge A/C system and perform the leak test to confirm no refrigerant leaks.
13. Conduct A/C performance test to ensure system works properly.

Refrigerant Lines

SEC. 271•274•276

- Refer to page HA-5 regarding "Precautions for Refrigerant Connection".

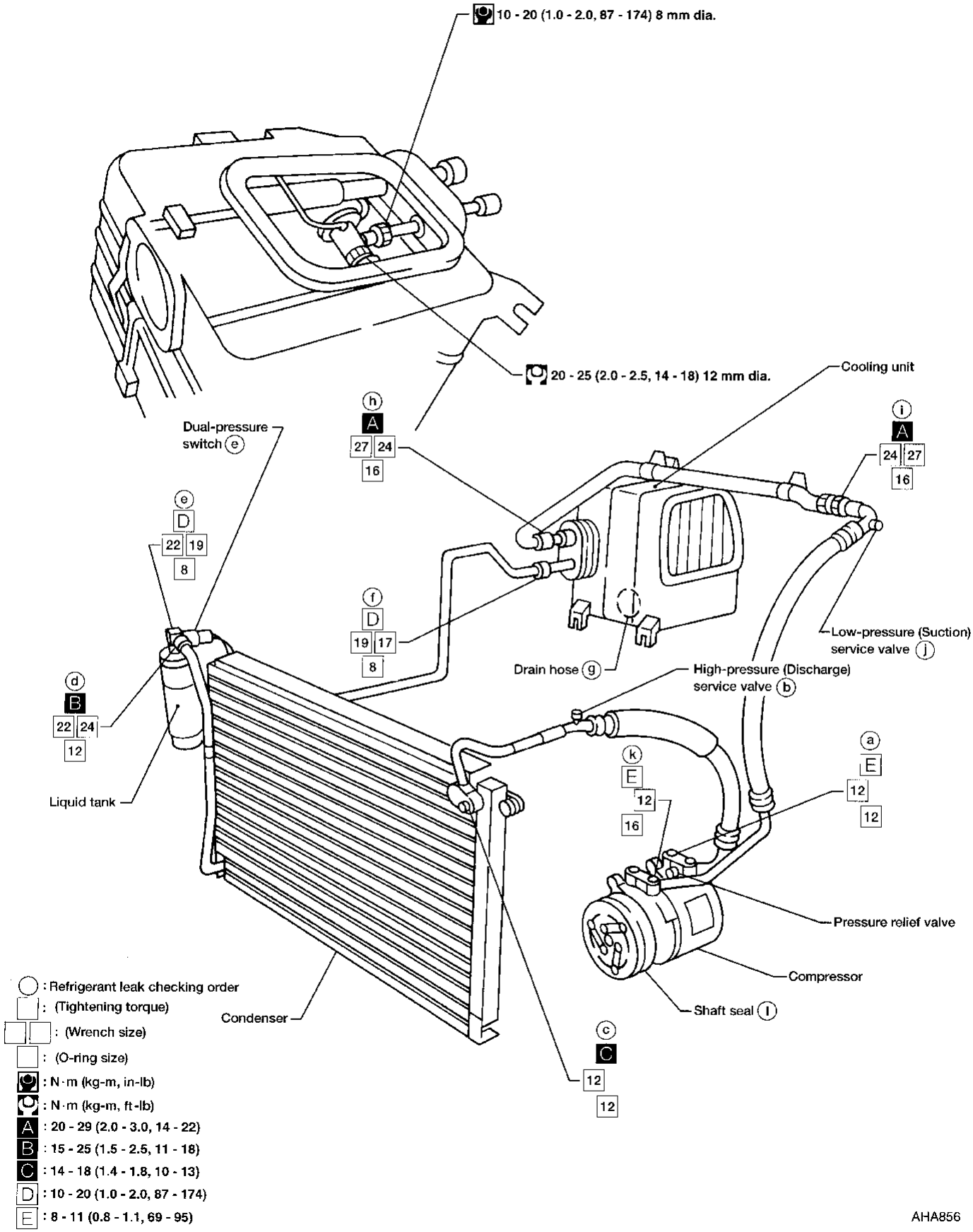

R-134a Service Procedure

DISCHARGING REFRIGERANT

WARNING:

Avoid breathing A/C refrigerant and lubricant vapor or mist. Exposure may irritate eyes, nose and throat. Remove R-134a from A/C system, using certified service equipment meeting requirements of SAE J2210 (R-134a recycling equipment), or J2209 (R-134a recovery equipment). If accidental system discharge occurs, ventilate work area before resuming service. Additional health and safety information may be obtained from refrigerant and lubricant manufacturers.

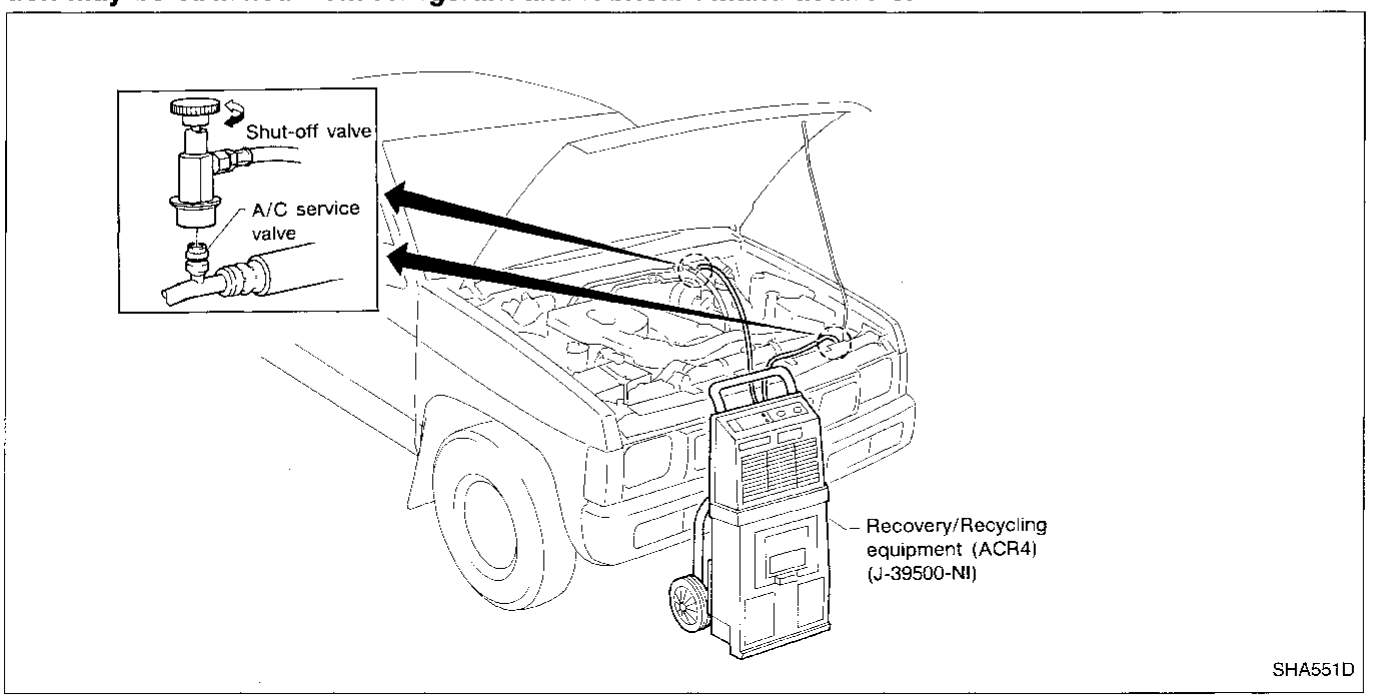

EVACUATING SYSTEM AND CHARGING REFRIGERANT

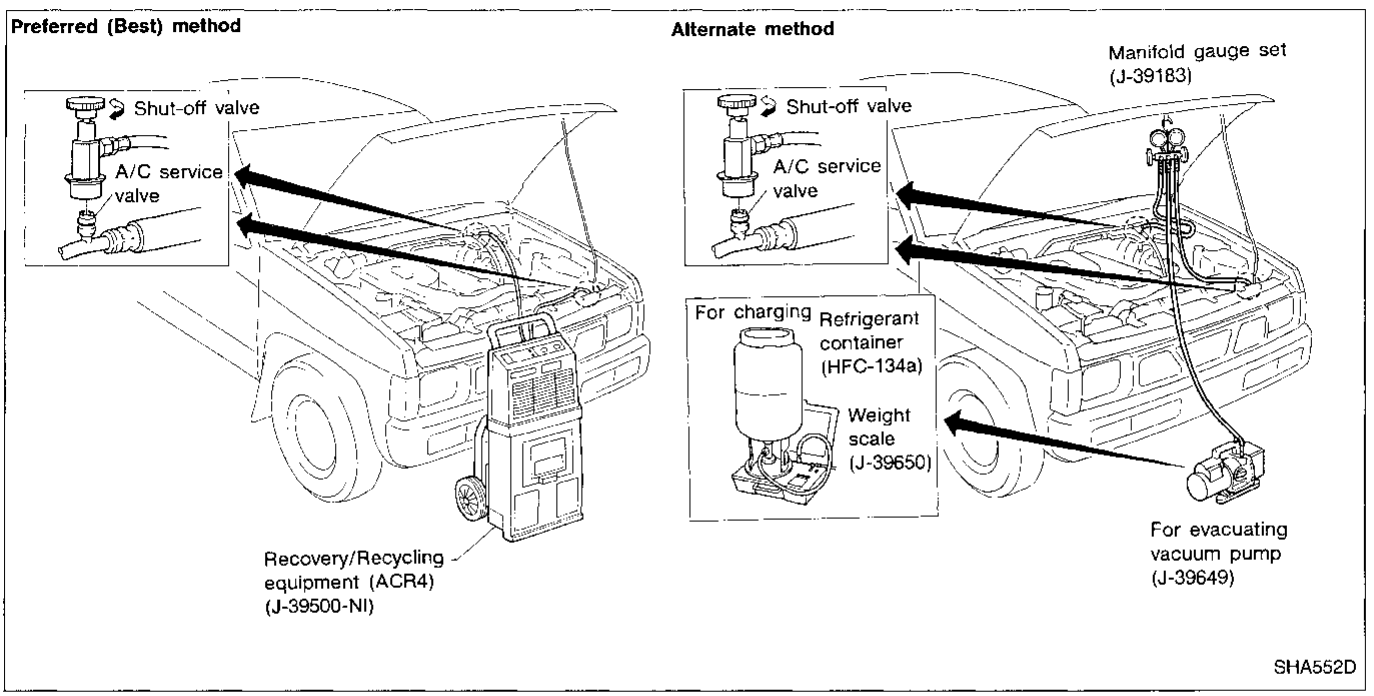

R-134a Service Procedure (Cont'd)

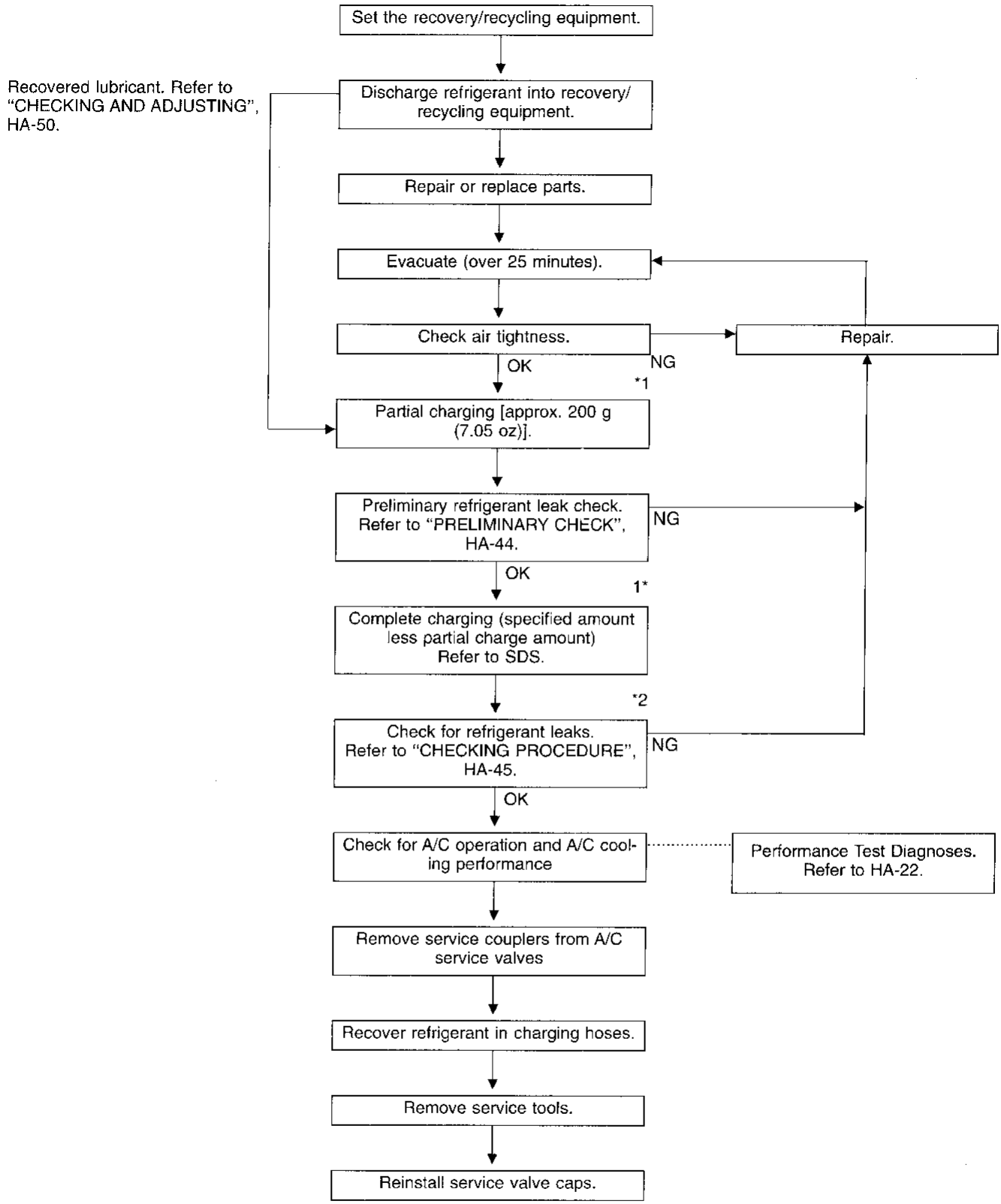

Note: *1 Before charging refrigerant, ensure engine is OFF.
*2 Before checking for leaks, start engine to activate air conditioner system then turn engine OFF. Service valve caps must be installed to prevent leakage.

Compressor Lubricant Quantity

The lubricant used to lubricate the compressor circulates through the system with the refrigerant. Whenever any A/C component is replaced or gas leakage occurs, lubricant must be added.
If lubricant quantity is not maintained properly, the following malfunctions may result:

- Lack of lubricant: May lead to a seized compressor
- Excessive lubricant: Inadequate cooling (thermal exchange interference)

LUBRICANT

Name: Nissan A/C System Lubricant Type R
Part No.: KLH00-PAGR0

CHECKING AND ADJUSTING

Adjust the lubricant quantity according to the flowchart shown below.

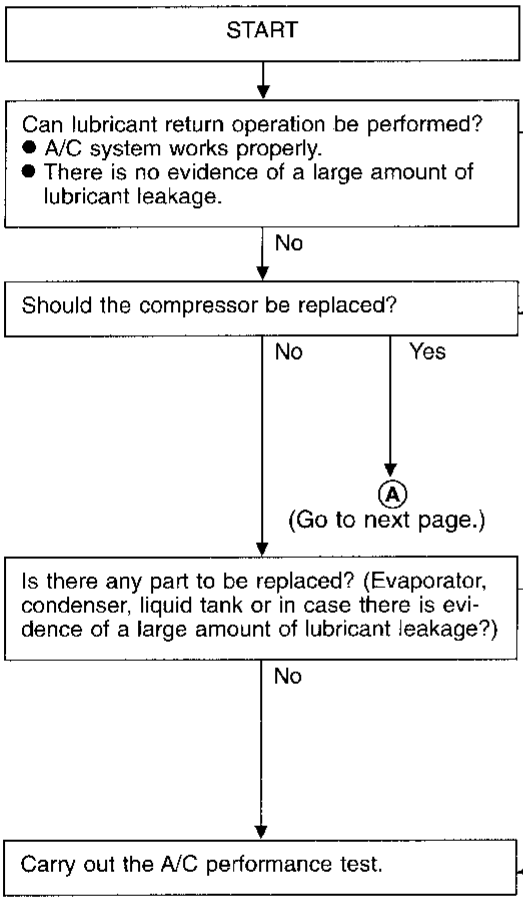

Perform lubricant return operation, proceeding as follows:

1. Start engine, and set the following conditions:
   - Test condition
     Engine speed: Idling to 1,200 rpm
     A/C switch: ON
     RECIRCULATION switch: OFF
     Fan speed: Max. position
     Temp. control: (Optional) Set so that intake air temperature is 25 to 30°C (77 to 86°F).
2. Perform lubricant return operation for 10 minutes.
3. Stop engine

CAUTION:
If excessive lubricant leakage is noted, do not perform the lubricant return operation.

After replacing any of the following major components, add the correct amount of lubricant to the system.
Amount of lubricant to be added

Part replaced	Lubricant to be added to system		Remarks
	Amount of lubricant mℓ (US fl oz, Imp fl oz)	Ratio (%)	
Evaporator	75 (2.5, 2.6)	30	—
Condenser	75 (2.5, 2.6)	20	—
Liquid tank	5 (0.2, 0.2)	10	Add if compressor is not replaced.*1
In case of refrigerant leak	30 (1.0, 1.1)	—	Large leak
	—	—	Small leak*2

*1: If compressor is replaced, addition of lubricant is included in the flow chart.
*2: If refrigerant leak is small, no addition of lubricant is needed.

Compressor Lubricant Quantity (Cont'd)

Ⓐ

1. Discharge refrigerant into refrigerant recovery/recycling equipment. Measure lubricant discharged into the recovery/recycling equipment.
2. Drain the lubricant from the old (removed) compressor into a graduated container and record the amount of lubricant drained.
3. Drain the lubricant from the new compressor into a separate, clean container.
4. Measure an amount of new lubricant equal to amount drained from old compressor. Add this lubricant to new compressor through the suction port opening.
5. Measure an amount of new lubricant equal to the amount recovered during discharging. Add this lubricant to new compressor through the suction port opening.
6. If the liquid tank also needs to be replaced, add an additional 5 mℓ (0.2 US fl oz, 0.2 Imp fl oz) of lubricant at this time.
   Do not add this 5 mℓ (0.2 US fl oz, 0.2 Imp fl oz) of lubricant if only replacing the compressor.

Lubricant adjusting procedure for compressor replacement

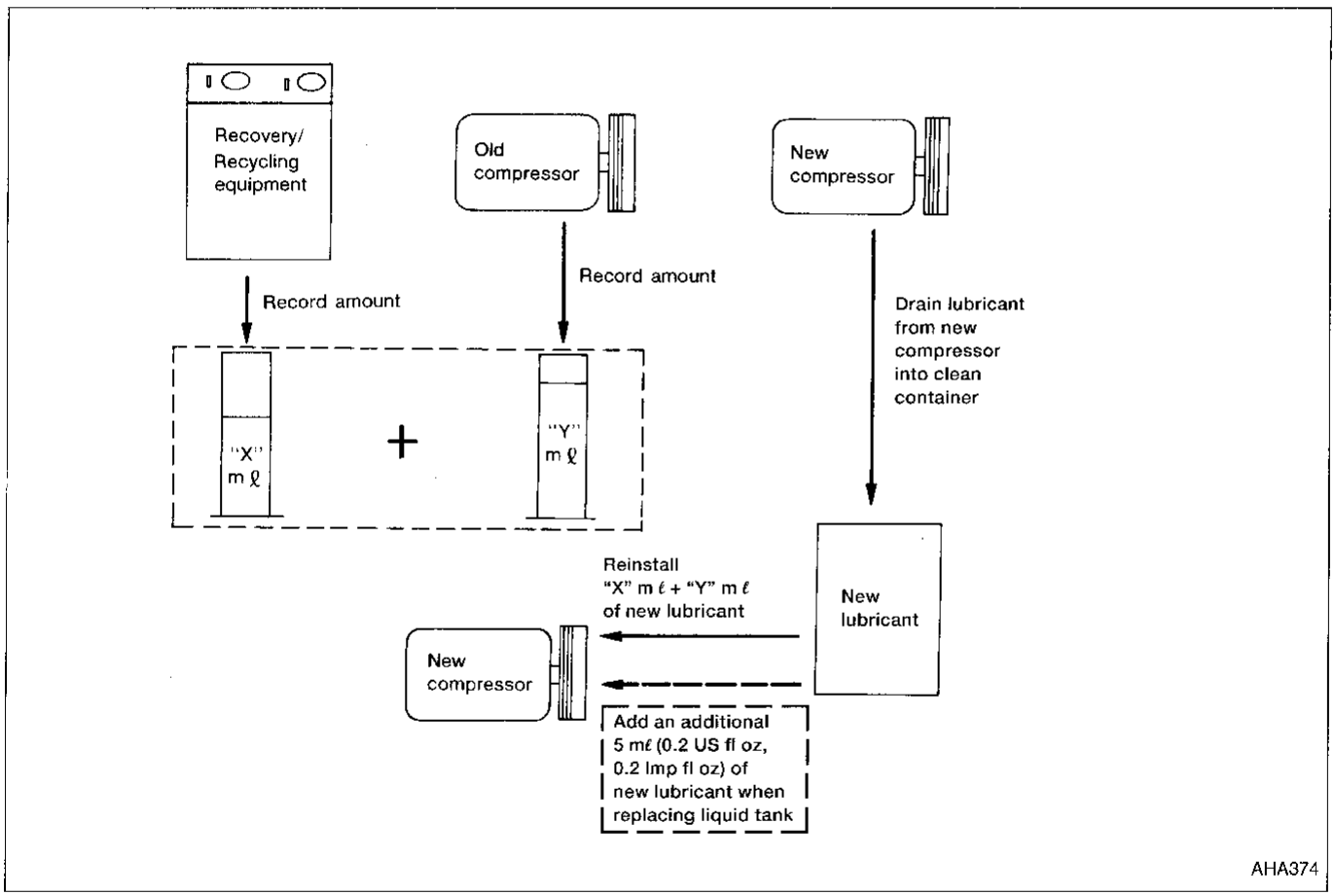

Compressor Mounting

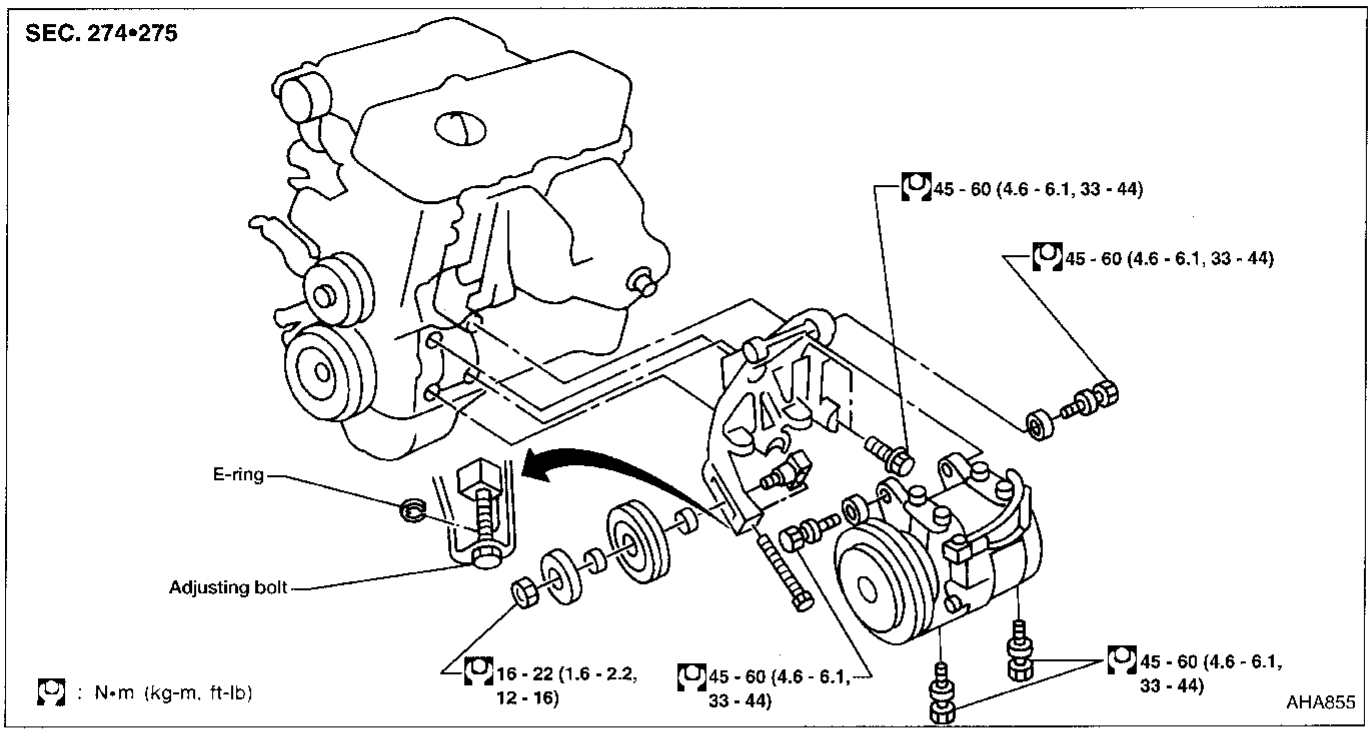

Belt Tension

- **Refer to MA section ("Checking Drive Belts", "ENGINE MAINTENANCE").**

Fast Idle Control Device (FICD)

- **Refer to EC section ("IACV-FICD Solenoid Valve", TROUBLE DIAGNOSIS FOR NON-DETECTABLE ITEMS").**

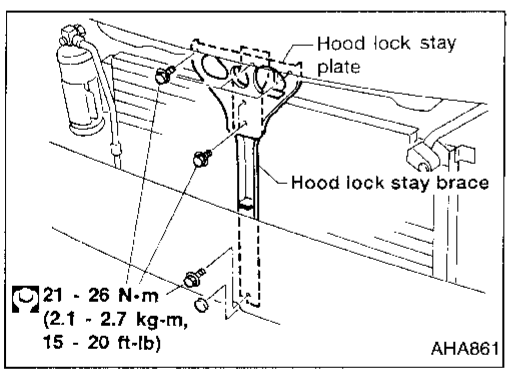

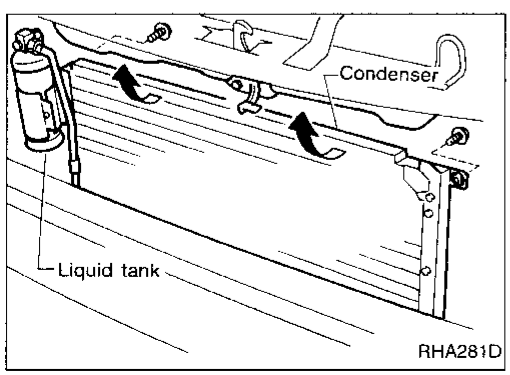

Condenser

REMOVAL

1. Discharge refrigerant using the recovery/recycling equipment (ACR4).
2. Remove coolant reservoir tank (3 screws).
3. Remove side marker lamps.
4. Remove front grille (5 fasteners).
5. Remove harness clip from hood lock stay, if equipped (gently press out).
6. Remove hood lock stay plate (4 bolts) and hood lock stay brace (2 bolts).
7. Remove hose (high-pressure) clamp bracket from radiator core support.
8. Disconnect high-pressure hose at condenser.
9. Disconnect dual-pressure switch harness connector.
10. Disconnect high-pressure tube (liquid tank to cooling unit) at liquid tank.
11. Remove condenser mounting bolts (2 bolts).
12. Remove condenser assembly.

CAUTION:
Carefully lift condenser without damaging radiator (fin and tube).

Compressor

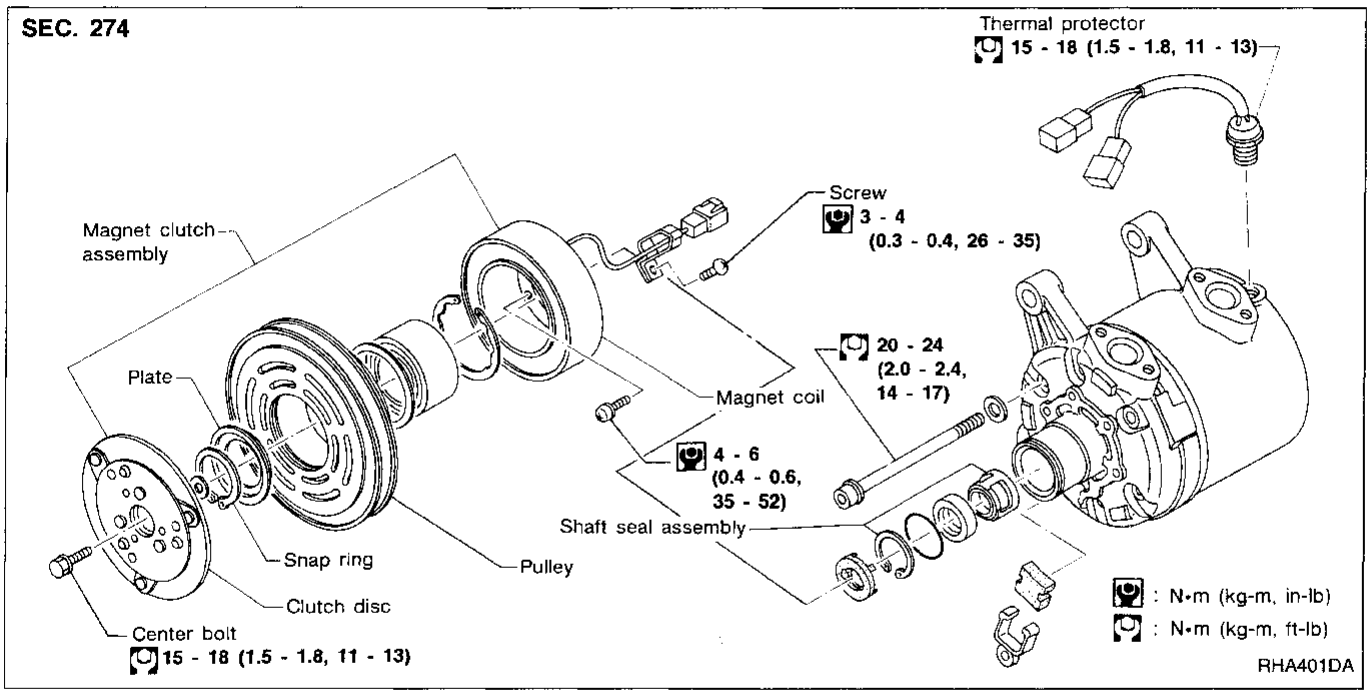

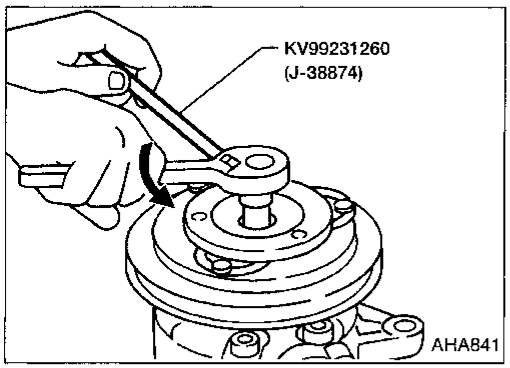

Compressor Clutch

REMOVAL

- When removing center bolt, hold clutch disc with clutch disc wrench.

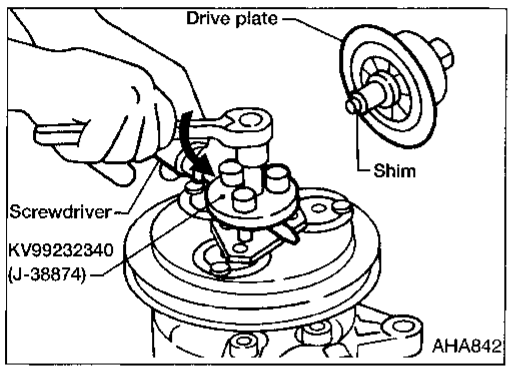

- Remove the drive plate using Tool KV99232340.
  Insert holder's three pins into the drive plate. Rotate the holder clockwise to hook it onto the plate. Then, tighten the center bolt to remove the drive plate.
  When tightening the center bolt, insert a round bar (screwdriver, etc.) between two of the pins (as shown in the left-hand figure) to prevent drive plate rotation. After removing the drive plate, remove the shims from either the drive shaft or the drive plate.

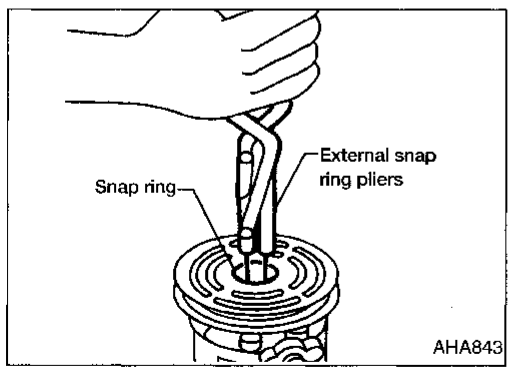

- Remove the snap ring using external snap ring pliers.

Compressor Clutch (Cont'd)

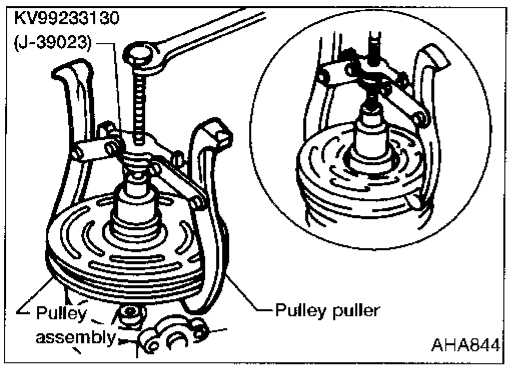

- Pulley removal
  Use any commercially available pulley puller. Position the center of it on the end of the drive shaft, and remove the pulley assembly.
  For pressed pulleys:
  To prevent deformation of the pulley groove, the puller claws should be hooked under (not into) the pulley groove.
  For machine latched pulleys:
  Align the pulley puller groove with the pulley groove, and then remove the pulley assembly.
- Remove the field coil harness clip using a screwdriver.

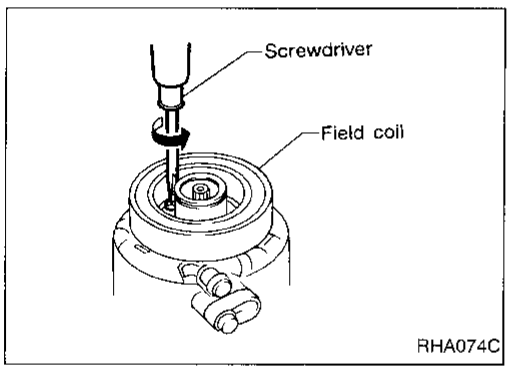

- Remove the three field coil fixing screws and remove the field coil.

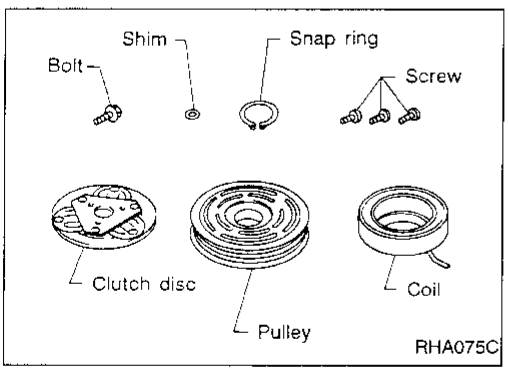

INSPECTION

Clutch disc : If the contact surface shows signs of damage due to excessive heat, replace clutch disc and pulley.
Pulley : Check the appearance of the pulley assembly. Check the contact surface of the pulley for any sign of excessive grooving due to slippage. If any sign is found, replace both the pulley and clutch disc. The contact surfaces of the pulley assembly should be cleaned with a suitable solvent before reinstallation.
Coil : Check coil for loose connection or cracked insulation.

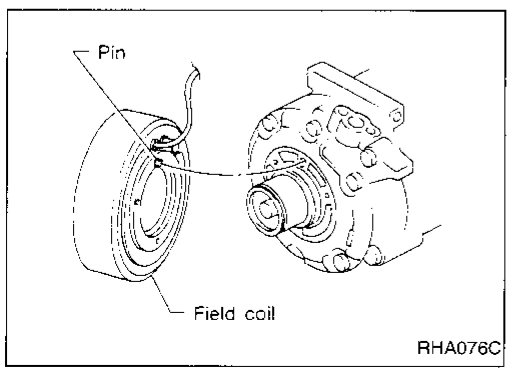

INSTALLATION

- Install the field coil.
- **Be sure to align the coil's pin with the hole in the compressor's front head.**
- Install the field coil harness clip using a screwdriver.

Compressor Clutch (Cont'd)

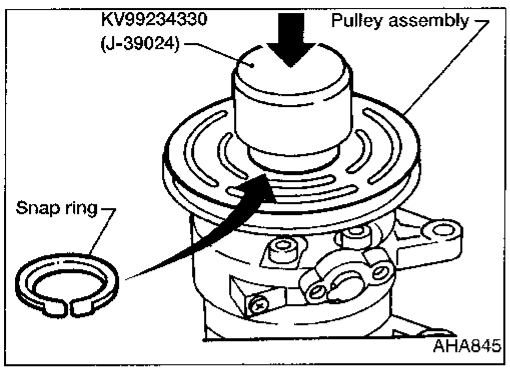

- Install the pulley assembly using the installer and a hand press, and then install the snap ring using snap ring pliers.

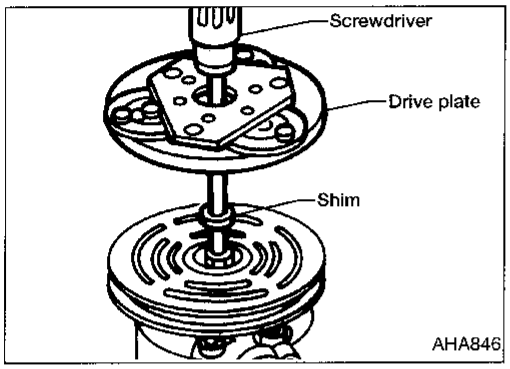

- Install the drive plate on the drive shaft, together with the original shim(s). Press the drive plate down by hand.

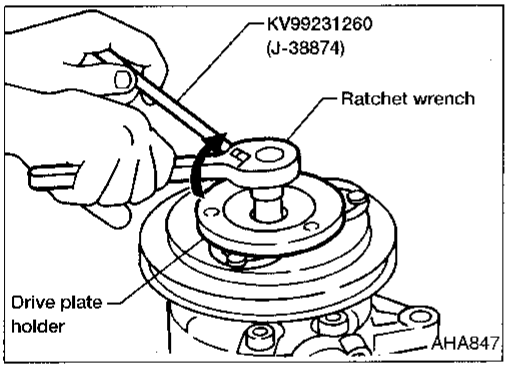

- Using the holder to prevent drive plate rotation, tighten the bolt to 12 - 15 N·m (1.2 - 1.5 kg-m, 9 - 11 ft-lb) torque.
- **After tightening the bolt, check that the pulley rotates smoothly.**

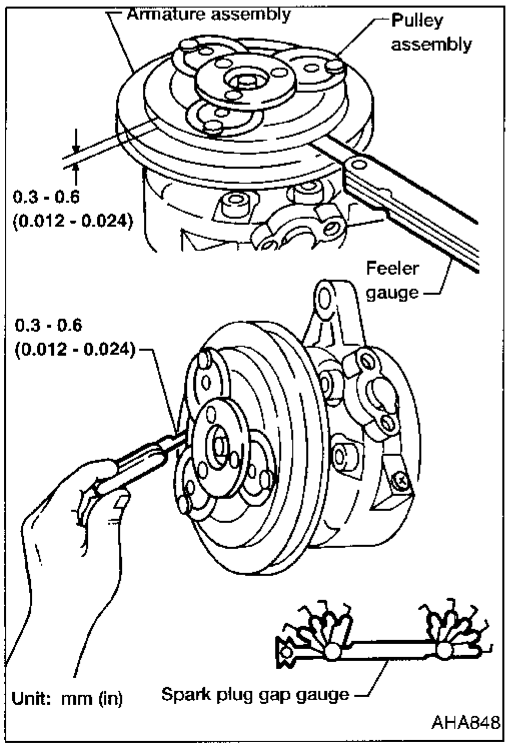

- Check clearance around the entire periphery of clutch disc.
  Disc-to-pulley clearance:
  0.3 - 0.6 mm (0.012 - 0.024 in)
  If the specified clearance is not obtained, replace adjusting spacer and readjust.

BREAK-IN OPERATION

When replacing compressor clutch assembly, always conduct the break-in operation. This is done by engaging and disengaging the clutch about thirty times. Break-in operation raises the level of transmitted torque.

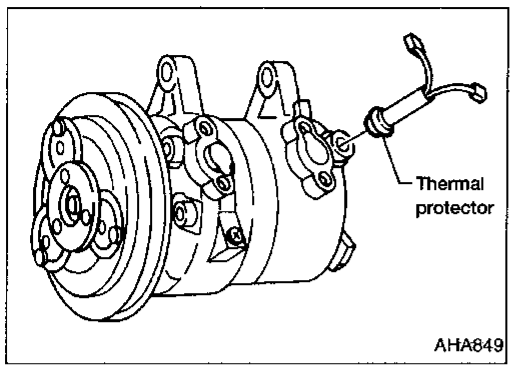

Thermal Protector

INSPECTION

- When servicing, do not allow foreign matter to get into compressor.
- Check continuity between two terminals.

General Specifications

COMPRESSOR

Model	DKV-14C
Type	Vane rotary
Displacement cm^3 (cu in)/Rev	140 (8.54)
Direction of rotation	Clockwise (Viewed from drive end)
Drive belt	A type

LUBRICANT

Model	ZEXEL make DKV-14C
Name	Nissan A/C System Oil Type R
Part number	KLH00-PAGR0
Capacity mℓ (US fl oz, Imp fl oz)	
Total in system	200 (6.8, 7.0)
Compressor (Service parts) charging amount	200 (6.8, 7.0)

REFRIGERANT

Type	R134a
Capacity kg (lb)	0.75 - 0.85 (1.65 - 1.87)

Inspection and Adjustment

ENGINE IDLING SPEED

When A/C is ON
Refer to EC section.

BELT TENSION

Refer to MA section ("Checking Drive Belts", "ENGINE MAINTENANCE").

COMPRESSOR

Model	DKV-14C
Clutch disc-to-pulley clearance mm (in)	0.3 - 0.6 (0.012 - 0.024)

SECTION EL

CONTENTS

PRECAUTIONS 2
Supplemental Restraint System (SRS) "AIR BAG" 2
HARNESS CONNECTOR 3
STANDARDIZED RELAY 4
POWER SUPPLY ROUTING 6
Schematic 6
Wiring Diagram –POWER– 7
Fuse 11
Fusible Link 11
Circuit Breaker Inspection 11
GROUND DISTRIBUTION 12
BATTERY 15
How to Handle Battery 15
Service Data and Specifications (SDS) 18
STARTING SYSTEM 19
System Description 19
Wiring Diagram –START– 20
Starter 22
Pinion/Clutch Check 24
Service Data and Specifications (SDS) 24
CHARGING SYSTEM 25
System Description 25
Wiring Diagram – CHARGE– 26
Trouble Diagnoses 27
Generator 28
Diode Check 29
Disassembly and Assembly 30
Service Data and Specifications (SDS) 31
COMBINATION SWITCH 32
Combination Switch/Check 32
Combination Switch/Replacement 33
Steering Switch/Check 34
HEADLAMP 35
System Description (For USA) 35
Wiring Diagram (For USA) – H/LAMP– 36
Trouble Diagnoses (For USA) 37
System Description (For Canada) 38
Operation (Daytime light system for Canada) 39
Schematic (For Canada) 40
Wiring Diagram (For Canada) –DTRL– 42
Trouble Diagnoses (For Canada) 45
Bulb Specifications 47
Aiming Adjustment 47
EXTERIOR LAMP 49
Back-up Lamp/Wiring Diagram –BACK/L– 49
Parking, License, Tail and Stop Lamps/Wiring Diagram –TAIL/L– 50
Turn Signal and Hazard Warning Lamps/System Description 52
Turn Signal and Hazard Warning Lamps/Wiring Diagram –TURN– 54
Turn Signal and Hazard Warning Lamps/Trouble Diagnoses 56
Combination Flasher Unit Check 56
Bulb Specifications 57
INTERIOR LAMP 58
Illumination/System Description 58
Illumination/Schematic 59
Illumination/Wiring Diagram –ILL– 60
Interior and MAP Lamps/ Wiring Diagram –INT/L– 63
Bulb Specifications 64
METERS AND GAUGES 65
System Description 65
Combination Meter 66
Speedometer, Tachometer, Temp. and Fuel Gauges/Wiring Diagram –METER– 68
Inspection/Water Temperature Gauge 69
Inspection/Fuel Gauge 70
Inspection/Tachometer 71
Inspection/Speedometer and Vehicle Speed Sensor 72
Inspection/Speedometer and Fuse 73
Fuel Tank Gauge Unit Check 74
Fuel Warning Lamp Sensor Check 74
Thermal Transmitter Check 74
Oil Pressure Switch Check 74
Vehicle Speed Sensor Signal Check 75
WARNING LAMPS 76

CONTENTS (Cont'd.)

System Description 76
Schematic 78
Wiring Diagram –WARN– 79
Diode Check 82
WARNING CHIME 83
System Description 83
Wiring Diagram –CHIME– 84
Trouble Diagnoses 85
WIPER AND WASHER 92
System Description 92
Wiring Diagram –WIPER– 94
Trouble Diagnoses 96
Wiper Amplifier Check 99
Installation 99
Washer Nozzle Adjustment 100
HORN, LIGHTER, CLOCK 101
Wiring Diagram –HORN– 101
AUDIO 102
System Description 102
Schematic 103
Wiring Diagram –AUDIO– 104
Trouble Diagnoses 107
ANTENNA 109
Location of Antenna 109
Window Antenna Repair 110
MIRROR 112
Wiring Diagram –MIRROR– 112
AUTOMATIC SPEED CONTROL DEVICE (ASCD) 114
Component Parts and Harness Connector Location 114
System Description 115
Schematic 117
Wiring Diagram –ASCD– 118
Trouble Diagnoses 123
POWER WINDOW 135
Component Layout 135
System Description 136
Wiring Diagram –WINDOW– 138
Trouble Diagnoses 140
POWER DOOR LOCK 141
System Description 141
Schematic 142
Wiring Diagram –D/LOCK– 144
Trouble Diagnoses 146
LOCATION OF ELECTRICAL UNITS 150
Passenger Compartment 150
Engine Compartment 151
HARNESS LAYOUT 152
How To Read Harness Layout 152
Outline 153
Main Harness and Air Bag Harness 154
Instrument Harness 158
Engine Harness 159
Chassis and Tail Harness 160
Front Door Harness 161
Room Lamp Harness 162
SUPER MULTIPLE JUNCTION (SMJ) ..... Foldout page
Installation ..... Foldout page
Terminal Arrangement ..... Foldout page
JOINT CONNECTOR (J/C) ..... Foldout page
Location ..... Foldout page
Terminal Arrangement ..... Foldout page
FUSE BLOCK ..... Foldout page
Fuse Arrangement ..... Foldout page
CONTROL UNITS/MODULE ..... Foldout page

When you read wiring diagrams:
- **Read GI section, "HOW TO READ WIRING DIAGRAMS".**

When you perform trouble diagnoses, read GI section, "HOW TO FOLLOW FLOW CHART IN TROUBLE DIAGNOSES" and "HOW TO PERFORM EFFICIENT DIAGNOSIS FOR AN ELECTRICAL INCIDENT".

WIRING DIAGRAM REFERENCE CHART

ECCS (Ignition system) ..... **EC SECTION**
AUTOMATIC TRANSMISSION CONTROL SYSTEM, SHIFT LOCK SYSTEM ..... **AT SECTION**
ANTI-LOCK BRAKE SYSTEM ..... **BR SECTION**
SRS "AIR BAG" ..... **RS SECTION**
HEATER AND AIR CONDITIONER ..... **HA SECTION**

Supplemental Restraint System (SRS) "AIR BAG"

The Supplemental Restraint System "Air Bag", used along with a seat belt, helps to reduce the risk or severity of injury to the driver in a frontal collision. The Supplemental Restraint System consists of an air bag module (located in the center of the steering wheel), a diagnosis sensor unit, a crash zone sensor (4WD models), warning lamp, wiring harness and spiral cable. Information necessary to service the system safely is included in the **RS section** of this Service Manual.

WARNING:

- **To avoid rendering the SRS inoperative, which could increase the risk of personal injury or death in the event of a collision which would result in air bag inflation, all maintenance must be performed by an authorized NISSAN dealer.**
- **Improper maintenance, including incorrect removal and installation of the SRS, can lead to personal injury caused by unintentional activation of the system.**
- **Do not use electrical test equipment on any circuit related to the SRS unless instructed to in this Service Manual. SRS wiring harnesses are covered with yellow insulation either just before the harness connectors or for the complete harness, for easy identification.**

Description

HARNESS CONNECTOR

- All harness connectors have been modified to prevent accidental looseness or disconnection.
- The connector can be disconnected by pushing or lifting the locking section.

CAUTION:
Do not pull the harness when disconnecting the connector.

[Example]

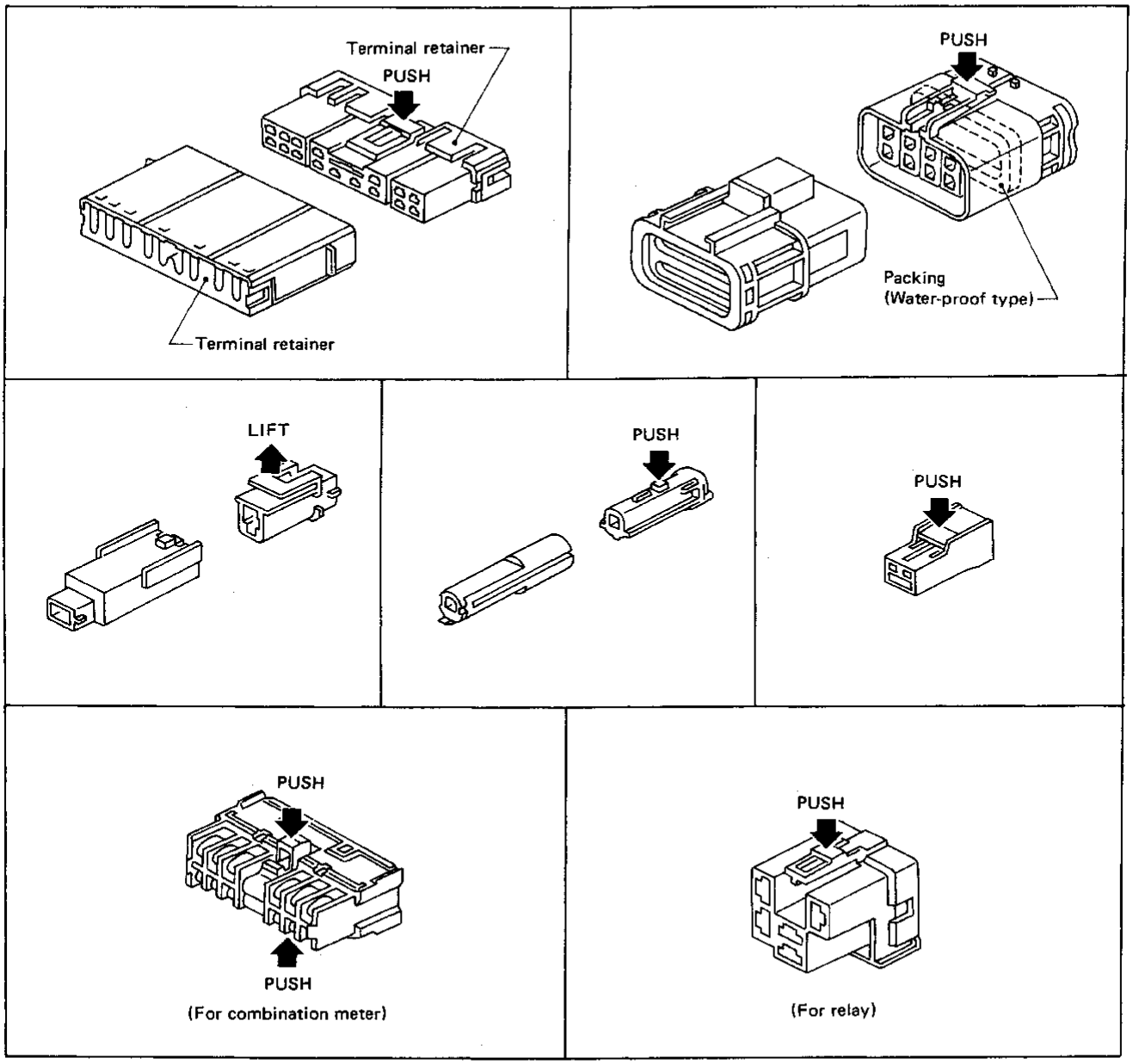

SEL769D

Description

NORMAL OPEN, NORMAL CLOSED AND MIXED TYPE RELAYS

Relays can be divided into three main types: normal open, normal closed and mixed type relays.

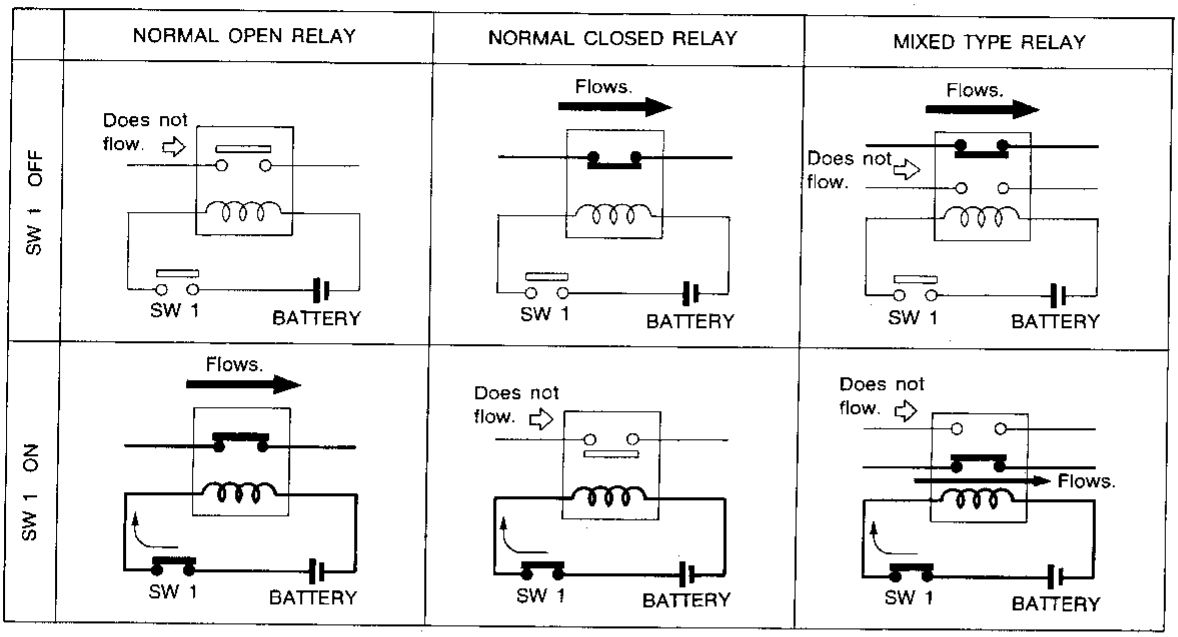

AEL669A

TYPE OF STANDARDIZED RELAYS

1M ..... 1 Make
2M ..... 2 Make
1M·1B ..... 1 Make 1 Break

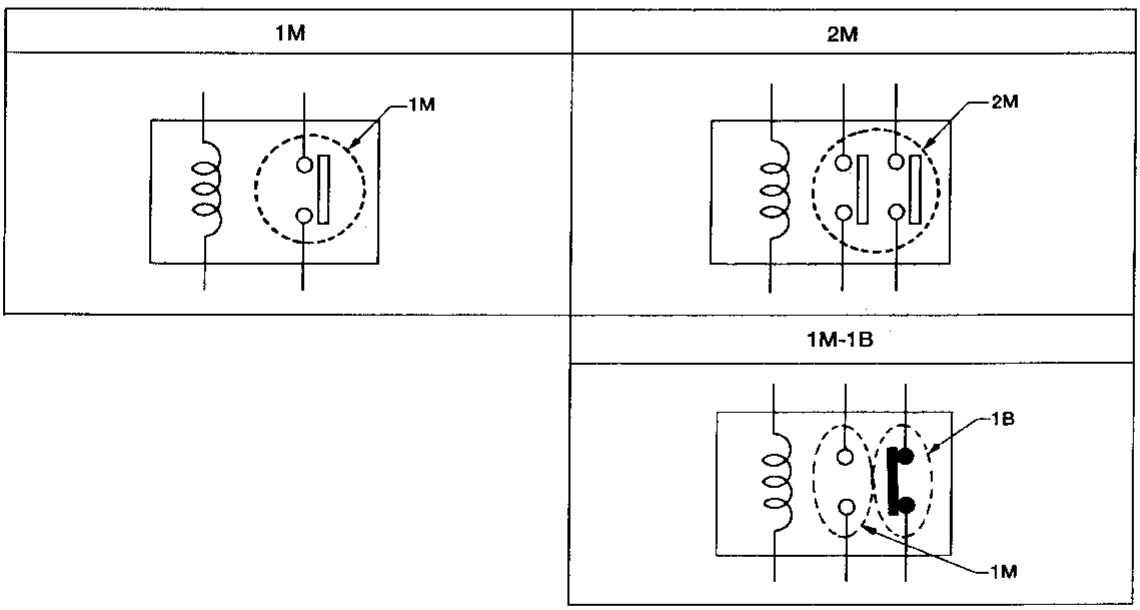

AEL309A

Description (Cont'd)

Type	Outer view	Circuit	Connector symbol and connection	Case color
1M	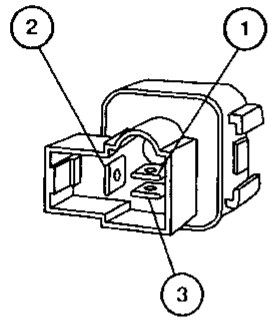	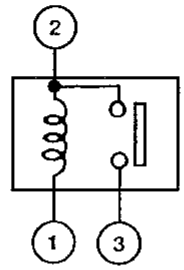	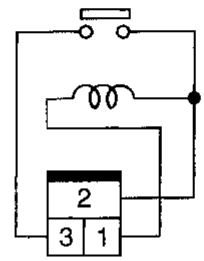	GRAY
1M	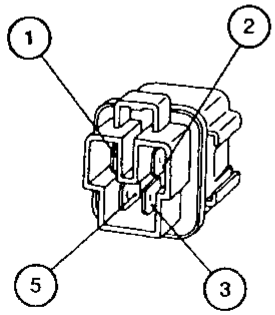	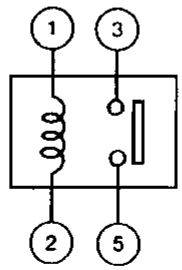	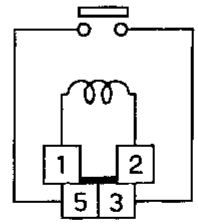	BLUE
1M	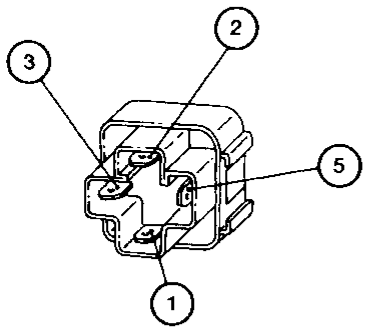	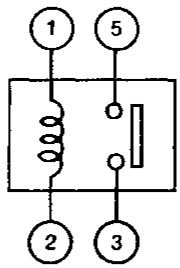	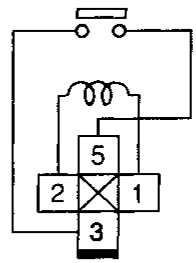	BLUE
2M	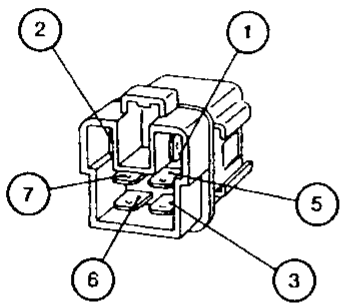	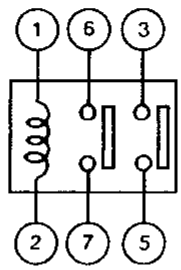	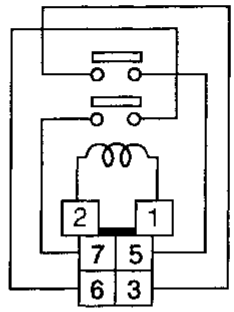	BROWN
1M-1B	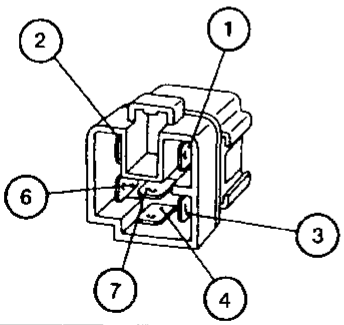	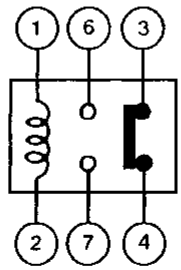	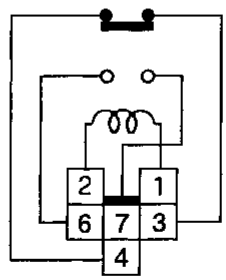	GRAY

AEL308A

Schematic

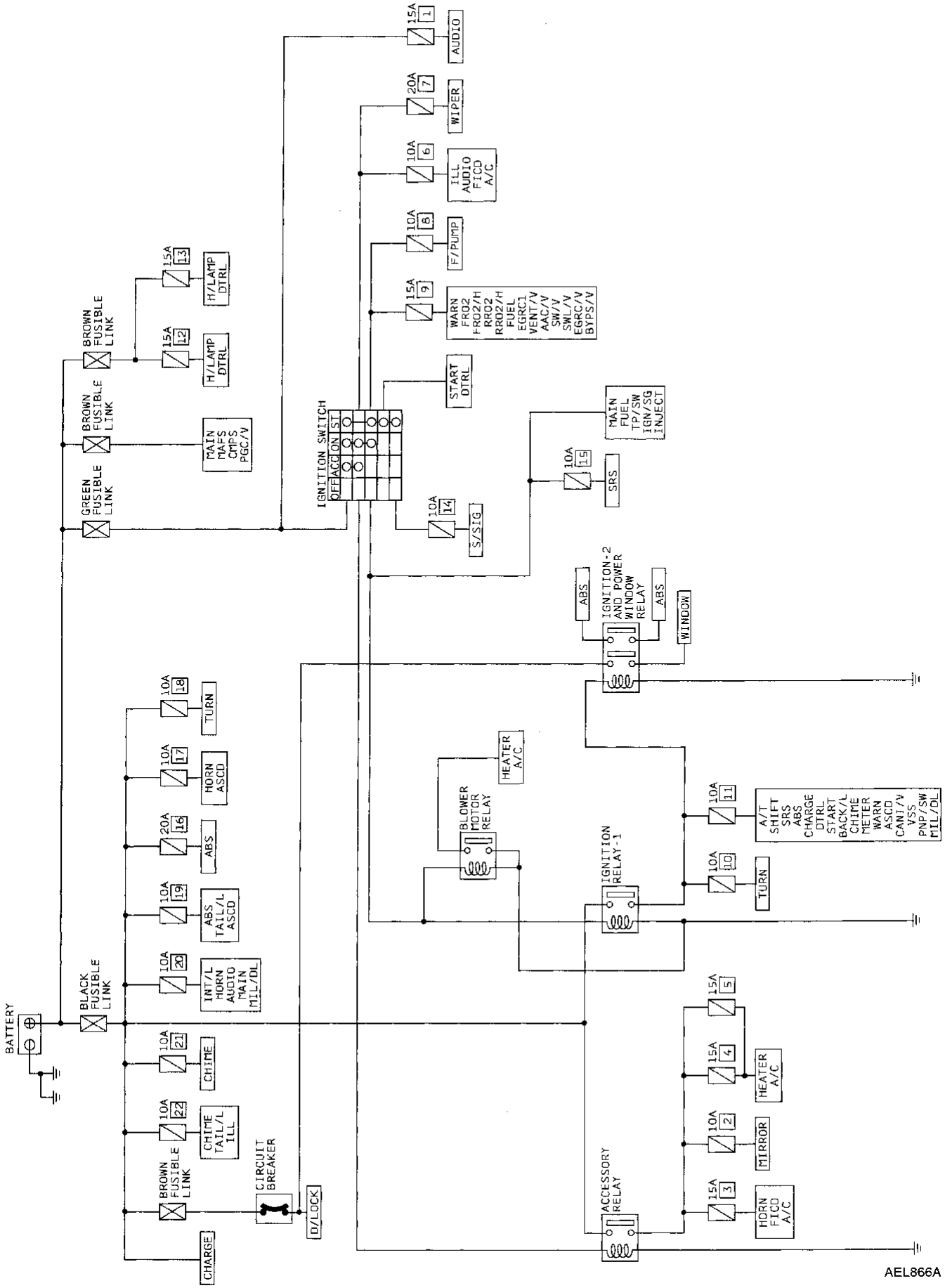

AEL866A

Wiring Diagram –POWER–

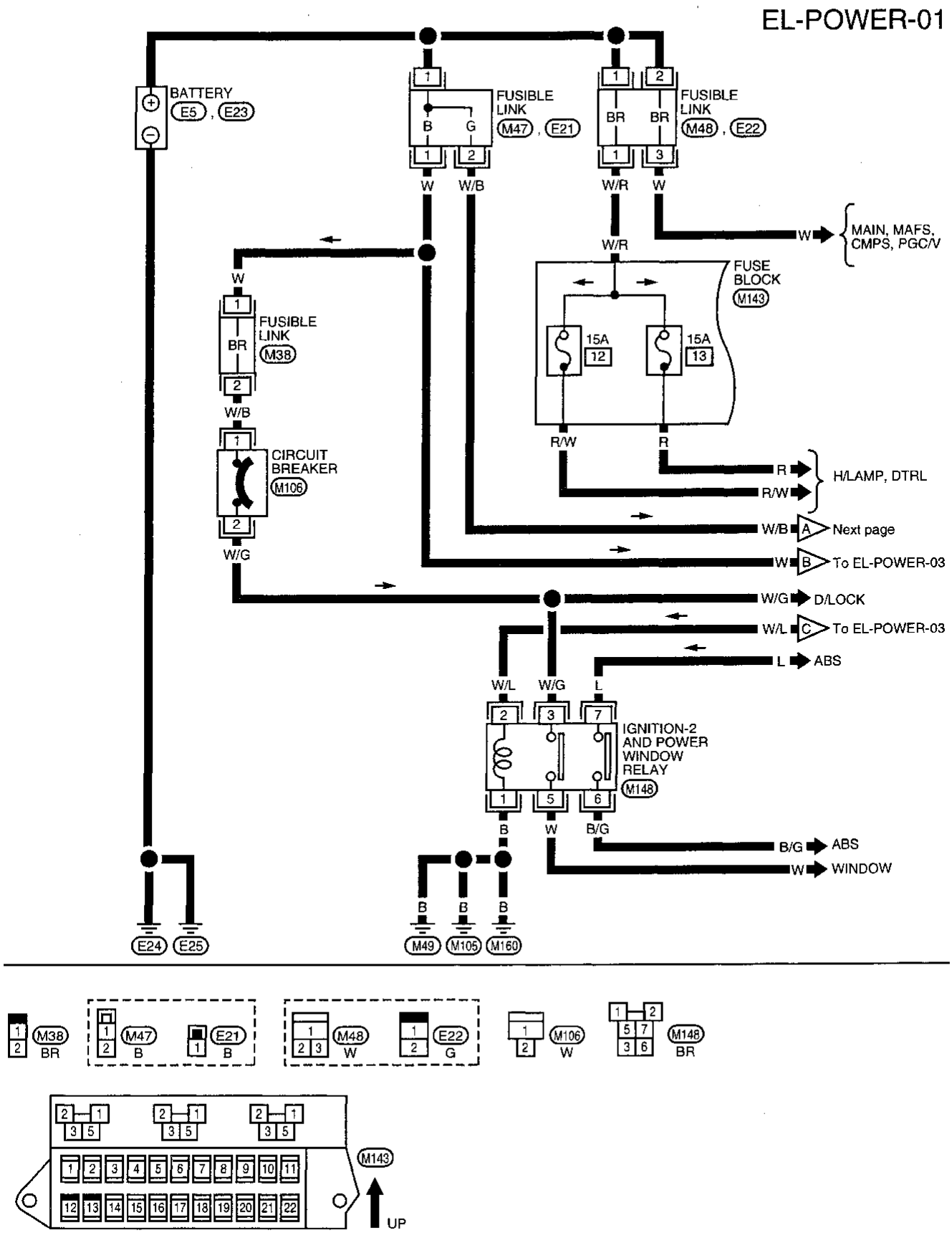

AEL299A-A

Wiring Diagram –POWER– (Cont'd)

EL-POWER-02

Preceding page A W/B

W/B 1

IGNITION SWITCH (M130)

OFF ST ACC ON | OFF ST ACC ON | OFF ST ACC ON

4 5 3 2

B/Y B/Y B/W B/L

B/W D To EL-POWER-04

B/Y B/W 3 B/L 2 (M147) W/B

FUSE BLOCK (M143)

E F Next page

10A 14 | 10A 8 | 15A 9 | 10A 6 | 20A 7 | 15A 1

OR B/W B/W G/W L/Y G/W

G/W AUDIO

L/Y WIPER

G/W ILL, AUDIO, FICD, A/C

B/W WARN, FRO2, FRO2/H, RRO2, RRO2/H, FUEL, EGRC1, VENT/V, AAC/V, SW/V, SWL/V, EGRC/V, BYPS/V

B/W F/PUMP

OR S/SIG

B/Y START, DTRL

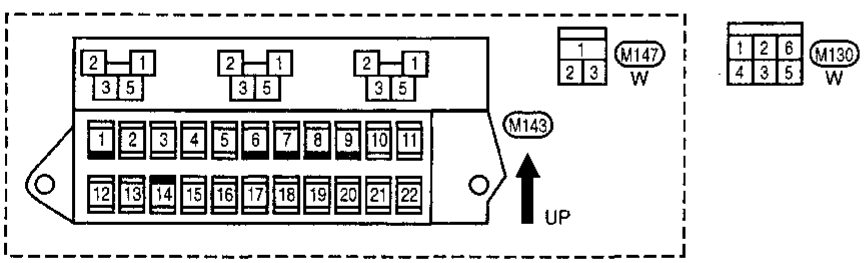

AEL299A-B

Wiring Diagram –POWER– (Cont'd)

EL-POWER-03

To EL-POWER-01 B W

B HEATER, A/C

W G Next page

Preceding page F E

FUSE BLOCK (M143)

ACCESSORY RELAY (M149)

BLOWER MOTOR RELAY (M150)

IGNITION RELAY-1 (M151)

15A 3 15A 4 15A 5 10A 2 10A 10 10A 11

B (M147) G/R L L (M144) B/L G/R OR W/B (M145) W/L

To EL-POWER-01 C W/L

W/B A/T, SHIFT, SRS, ABS, CHARGE, DTRL, START, BACK/L, CHIME, METER, WARN, ASCD, CANI/V, VSS, PNP/SW, MIL/DL

OR TURN

G/R MIRROR

L HEATER, A/C

G/R HORN, FICD, A/C

JOINT CONNECTOR-2 (M142)

B B B

(M49) (M105) (M160)

Refer to last page (Foldout page). (M142)

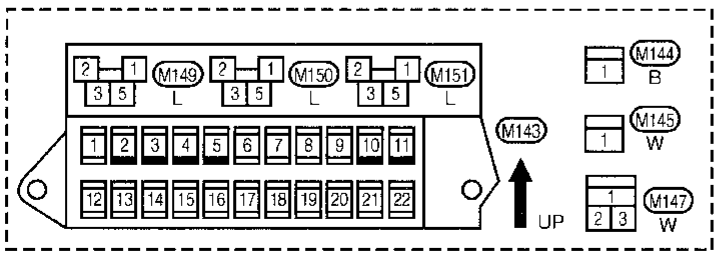

AEL867A

EL-POWER-04

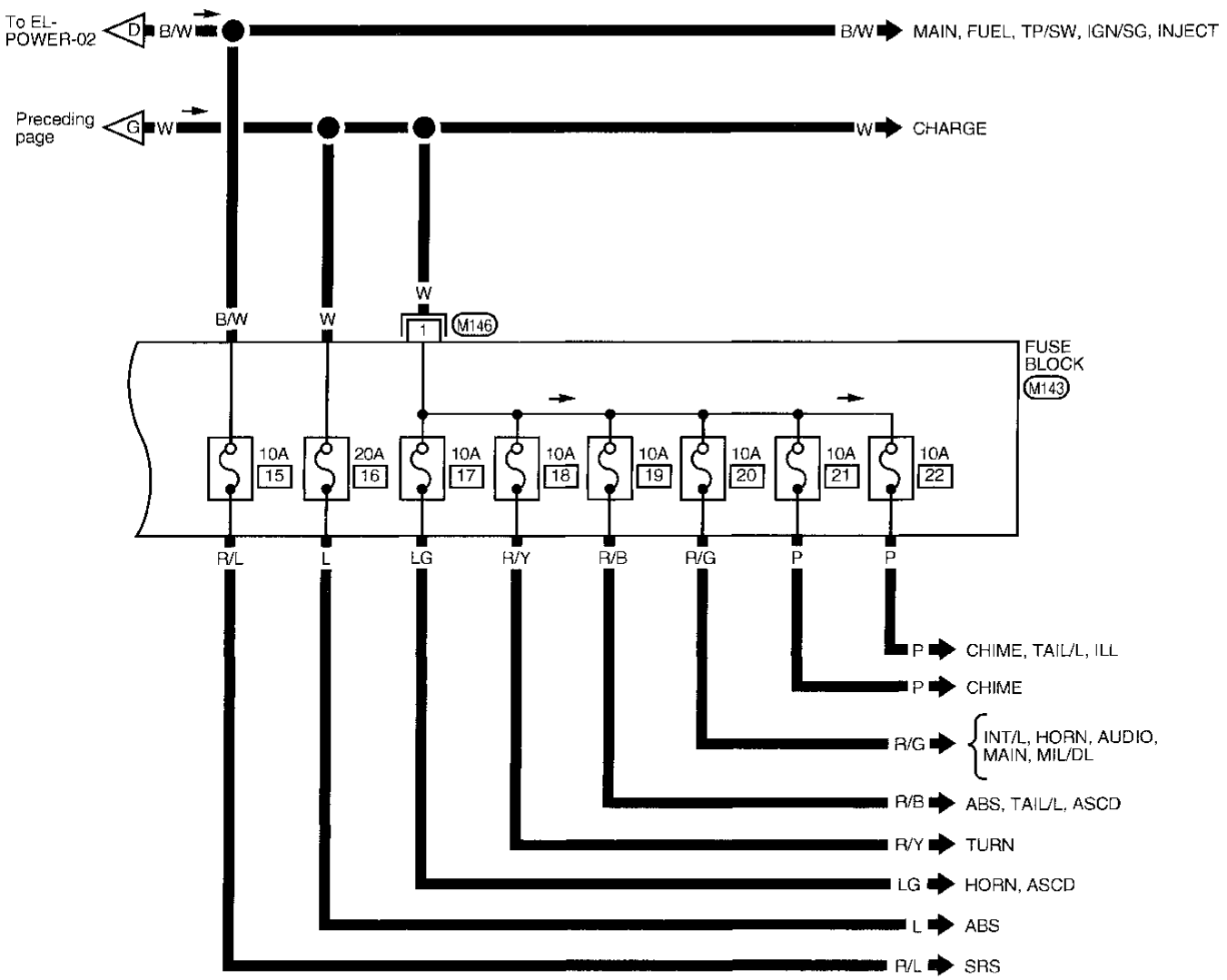

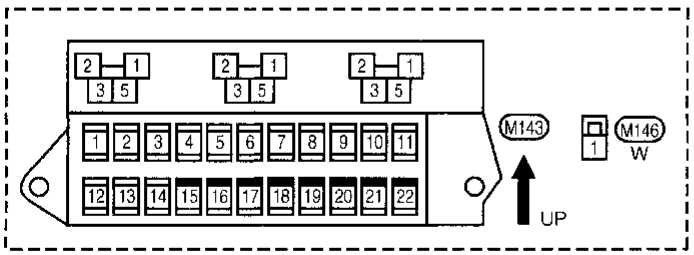

AEL868A

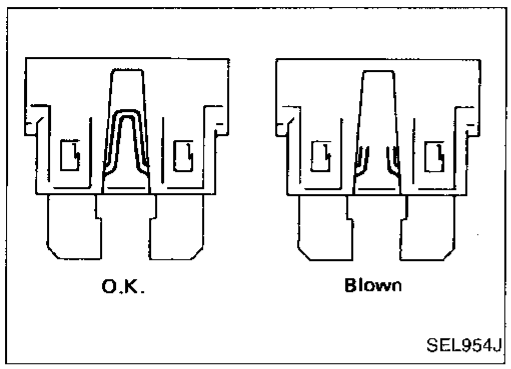

Fuse

- **If fuse is blown, be sure to eliminate cause of problem before installing new fuse.**
- **Use fuse of specified rating. Never use fuse of more than specified rating.**
- **Do not partially install fuse; always insert it into fuse holder properly.**
- **Remove fuse for "ELECTRICAL PARTS (BAT)" if vehicle is not used for a long period of time.**

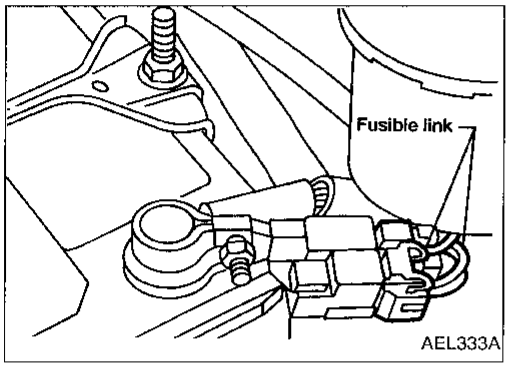

Fusible Link

A melted fusible link can be detected either by visual inspection or by feeling with fingertip. If its condition is questionable, use circuit tester or test lamp.

CAUTION:

- **If fusible link should melt, it is possible that a critical circuit (power supply or large current carrying circuit) is shorted. In such a case, carefully check these circuits and eliminate cause of problem.**
- **Never wrap outside of fusible link with vinyl tape.**

Important: Never let fusible link touch any other wiring harness, vinyl or rubber parts.

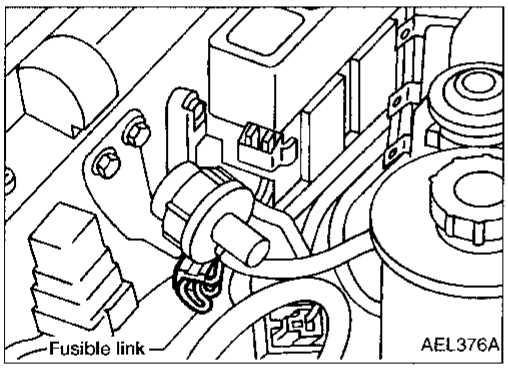

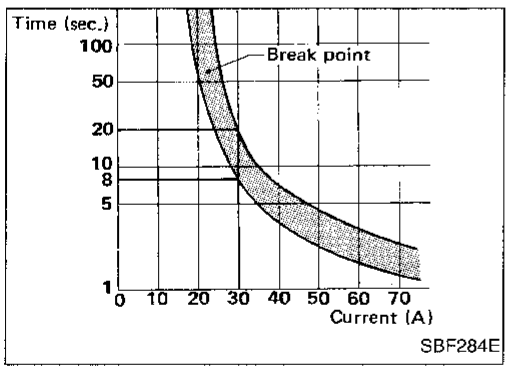

Circuit Breaker Inspection

For example, when current is 30A, the circuit is broken within 8 to 20 seconds.

Circuit breakers are used in the following systems:

- Power door lock
- Power window

GROUND	CONNECT TO	CONN. NO.	CELL CODE
M15/M16	ABS CHECK CONNECTOR	M154	BR-ABS
	DATA LINK CONNECTOR FOR CONSULT	M153	EC-MIL/DL
	DATA LINK CONNECTOR FOR GST	M152	EC-MIL/DL
	DISTRIBUTOR (CAMSHAFT POSITION SENSOR)	M12	EC-CMPS
	DISTRIBUTOR (POWER TRANSISTOR)	M12	EC-IGN/SG
	ECM (ECCS CONTROL MODULE)	M112	EC-MAIN EC-AP/SEN EC-FR02 EC-FR02/H EC-FUEL
	REAR HEATED OXYGEN SENSOR	M402	EC-RR02 EC-RR02/H
	SHIELD WIRE (ABSOLUTE PRESSURE SENSOR)	M24	EC-AP/SEN
	SHIELD WIRE (CAMSHAFT POSITION SENSOR)	M12	EC-CMPS
	SHIELD WIRE (CRANKSHAFT POSITION SENSOR)	E15	EC-CKPS
	SHIELD WIRE (EVAP CONTROL SYSTEM PRESSURE SENSOR)	C6	EC-PRE/SE
	SHIELD WIRE (FRONT HEATED OXYGEN SENSOR)	M62	EC-FR02 EC-FRO2/H EC-FUEL
	SHIELD WIRE (MASS AIR FLOW SENSOR)	M20	EC-MAFS
	SHIELD WIRE (REAR HEATED OXYGEN SENSOR)	M402	EC-RR02 EC-RR02/H
	SHIELD WIRE (THROTTLE POSITION SENSOR)	M23	EC-TPS AT-A/T
M49/M105/M160	ACCESSORY RELAY	M149	EL-POWER
	AIR BAG DIAGNOSIS SENSOR UNIT	M175	RS-SRS
	ASCD CONTROL UNIT	M126	EL-ASCD
	ASCD MAIN SWITCH	N2	EL-ASCD
	ASCD HOLD RELAY (With A/T)	M65	EL-ASCD
	ASCD HOLD RELAY (With M/T)	M64	EL-ASCD
	BLOWER MOTOR RELAY	M150	HA-A/C HA-HEATER EL-POWER
	BRAKE FLUID LEVEL SWITCH	M59	EL-WARN BR-ABS
	BULB CHECK RELAY	M63	EL-WARN
	CIGARETTE LIGHTER SOCKET	M119	EL-HORN
	CLUTCH INTERLOCK SWITCH (With M/T)	M136	EL-START
	COMBINATION FLASHER UNIT	M139	EL-TURN
	COMBINATION METER (AIR BAG WARNING LAMP)	N6	RS-SRS EL-WARN
	COMBINATION METER (CLOCK)	N6	EL-HORN
	COMBINATION METER [CLOCK (Without tachometer)]	N4	EL-HORN
	COMBINATION METER [CRUISE INDICATOR (With ASCD)]	N6	EL-ASCD
	COMBINATION METER (GAUGES)	N4	EL-METER
	COMBINATION METER (HIGH BEAM INDICATOR)	N5	EL-DTRL EL-H/LAMP
	COMBINATION METER (SPEEDOMETER)	N4	EC-VSS EL-ASCD
	COMBINATION METER [TACHOMETER (With tachometer)]	N6	EL-METER
	COMBINATION METER (TURN SIGNAL LAMP)	N6	EL-TURN
	COMBINATION METER [4WD INDICATOR (With 4WD)]	N6	EL-WARN
	DATA LINK CONNECTOR FOR GST	M152	EC-MIL/DL
	DAYTIME LIGHT CONTROL UNIT (With DTRL)	M41	EL-DTRL
	DOOR MIRROR SWITCH	N3	EL-MIRROR
	FRONT TURN SIGNAL LAMP LH	M70	EL-TURN
	FRONT TURN SIGNAL LAMP RH	M54	EL-TURN
	GLOVE BOX LAMP SWITCH	M203	EL-ILL

GROUND	CONNECT TO	CONN. NO.	CELL CODE
M49/M105/M160	HEADLAMP LH	M66	EL-H/LAMP
	HEADLAMP RH	M51	EL-H/LAMP EL-DTRL
	HIGH-MOUNTED STOP LAMP	R4	EL-TAIL/L
	IACV-FICD SOLENOID VALVE	M602	EC-FICD HA-A/C
	IGNITION RELAY-1	M151	EL-POWER
	IGNITION-2 AND POWER WINDOW RELAY	M148	BR-ABS EL-POWER EL-WINDOW
	ILLUMINATION CONTROL SWITCH	M123	EL-ILL
	CLUTCH INTERLOCK SWITCH (With M/T)	M36	EL-START
	INHIBITOR RELAY (With ASCD)	M35	EL-START EL-ASCD
	INHIBITOR RELAY (Without ASCD)	M34	EL-START
	LOCK/UNLOCK KNOB SWITCH	D9	EL-D/LOCK
	MAP LAMP	R2	EL-INT/L
	MAIN POWER WINDOW AND DOOR LOCK/UNLOCK SWITCH	D8	EL-DLOCK EL-WINDOW
	PARK AND NEUTRAL POSITION RELAY (with A/T)	M42	EC-PNP/SW AT-A/T
	POWER WINDOW AMPLIFIER	M102	EL-WINDOW
	ROOM LAMP	R5	EL-INT/L
	SWIRL CONTROL VALVE CONTROL VACUUM CHECK SWITCH	M39	EC-S/VCSW
	WARNING CHIME UNIT	M170	EL-CHIME
	WASHER FLUID LEVEL SWITCH (Canada only)	M58	EL-WARN
	WIPER AMPLIFIER	M4	EL-WIPER
	WIPER MOTOR	M3	EL-WIPER
	WIPER SWITCH	M132	EL-WIPER
M111	ECM (ECCS CONTROL MODULE)	M112	EC-MAIN EC-IGN/SG
	SHIELD WIRE (ABS CONTROL UNIT)	M176	BR-ABS

GROUND	CONNECT TO	CONN. NO.	CELL CODE
M177	ABS ACTUATOR	C3	BR-ABS
	ABS CONTROL UNIT	M176	BR-ABS
	A/T DEVICE	M174	AT-SHIFT
	A/T DEVICE (OVERDRIVE SWITCH)	M174	AT-A/T
	DOOR LOCK CONTROL UNIT	M178	EL-D/LOCK
	DOOR SWITCH LH	M171	RS-SRS EL-CHIME
	FRONT PARKING LAMP LH	M55	EL-TAIL/L
	FRONT PARKING LAMP RH	M50	EL-TAIL/L
	FUEL TANK GAUGE UNIT (FUEL PUMP)	C4	EC-F/PUMP
	FUEL TANK GAUGE UNIT (LOW FUEL WARNING)	C4	EL-WARN
	LICENSE LAMP LH	T5	EL-TAIL/L
	LICENSE LAMP RH	T4	EL-TAIL/L
	LICENSE LAMP LH (With step bumper)	T6	EL-TAIL/L
	LICENSE LAMP RH (With step bumper)	T2	EL-TAIL/L
	REAR COMBINATION LAMP LH (BACK-UP)	T7	EL-BACK/L
	REAR COMBINATION LAMP RH (BACK-UP)	T3	EL-BACK/L
	REAR COMBINATION LAMP LH (TAIL)	T7	EL-TAIL/L
	REAR COMBINATION LAMP RH (TAIL)	T3	EL-TAIL/L
	REAR COMBINATION LAMP LH (TURN)	T7	EL-TURN
	REAR COMBINATION LAMP RH (TURN)	T3	EL-TURN
	REAR SPEAKER AMPLIFIER	M179	EL-AUDIO
	SEAT BELT BUCKLE SWITCH	M173	EL-CHIME EL-WARN
E6	GENERATOR	E8	EL-CHARGE
	NEUTRAL POSITION SWITCH	E18	EC-PNP/SW
	POWER STEERING OIL PRESSURE SWITCH	E10	EC-PST/SW
E24/E25	BATTERY	E23	EL-POWER

CAUTION:

- **If it becomes necessary to start the engine with a booster battery and jumper cables, use a 12-volt booster battery.**
- **After connecting battery cables, ensure that they are tightly clamped to battery terminals for good contact.**

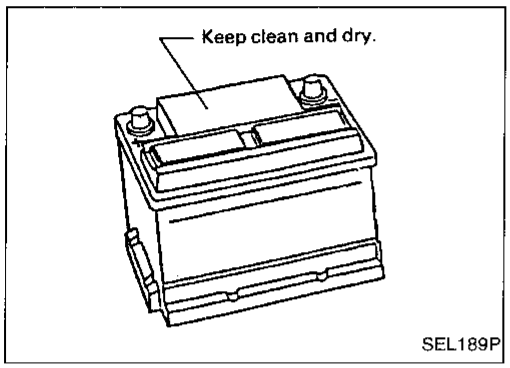

How to Handle Battery

METHODS OF PREVENTING DISCHARGE

The following precautions must be taken to prevent over-discharging a battery.

- The battery surface (particularly its top) should always be kept clean and dry.
- The terminal connections should be clean and tight.
- **During every routine maintenance, check the electrolyte level.** This also applies to batteries designated as "low maintenance" and "maintenance-free".

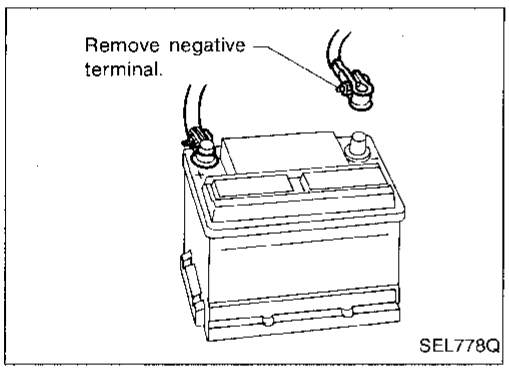

- When the vehicle is not going to be used over a long period of time, disconnect the negative battery terminal.

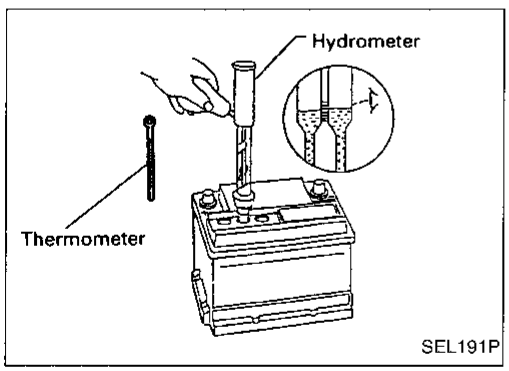

- Check the condition of the battery. Periodically check the specific gravity of the electrolyte. Keep a close check on charge condition to prevent over-discharge.

CHECKING ELECTROLYTE LEVEL

WARNING:

Do not allow battery fluid to come in contact with skin, eyes, fabrics, or painted surfaces. After touching a battery, do not touch or rub your eyes until you have thoroughly washed your hands. If acid contacts eyes, skin or clothing, immediately flush with water for 15 minutes and seek medical attention.

Normally the battery does not require additional water. However, when the battery is used under severe conditions, adding distilled water may be necessary during the battery life.

How to Handle Battery (Cont'd)

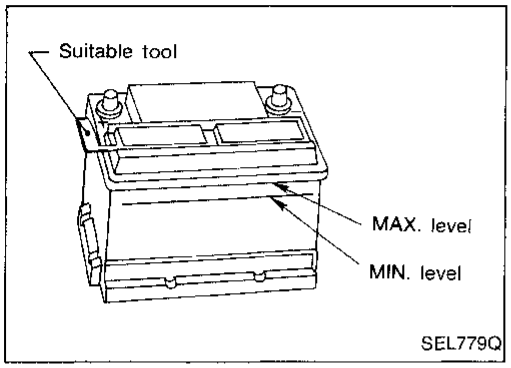

- Remove the cell plug using a suitable tool.
- Add distilled water up to the MAX level.

SULPHATION

A battery (with specific gravity less than 1.100) will completely discharge when left unattended for a long period of time. This will result in sulphation on the cell plates.

A sulphated battery may sometimes be brought back into service by means of a slow charge, 12 hours or more. A capacity test should be run after the battery is charged to ensure the battery is not damaged.

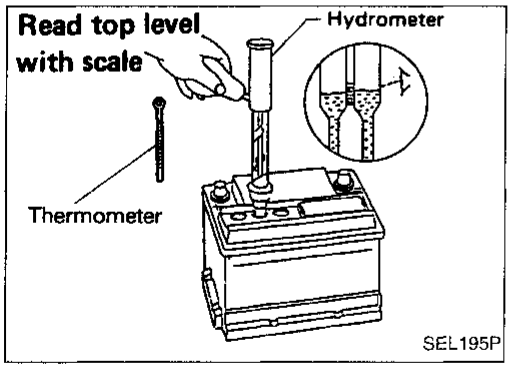

SPECIFIC GRAVITY CHECK

- Check hydrometer and thermometer readings at eye level.

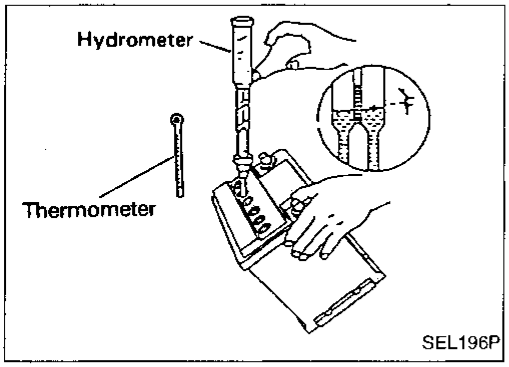

- When electrolyte level is too low, tilt battery case for easy measurement.

- Use the chart below to correct your hydrometer reading according to electrolyte temperature.

Hydrometer temperature correction

Battery electrolyte temperature °C (°F)	Add to specific gravity reading	Battery electrolyte temperature °C (°F)	Add to specific gravity reading
71 (160)	0.032	21 (70)	–0.004
66 (150)	0.028	16 (60)	–0.008
60 (140)	0.024	10 (50)	–0.012
54 (129)	0.020	4 (39)	–0.016
49 (120)	0.016	–1 (30)	–0.020
43 (110)	0.012	–7 (20)	–0.024
38 (100)	0.008	–12 (10)	–0.028
32 (90)	0.004	–18 (0)	–0.032
27 (80)	0		

Corrected specific gravity	Approximate charge condition	Corrected specific gravity	Approximate charge condition
1.260 - 1.280	Fully charged	1.170 - 1.190	1/4 charged
1.230 - 1.250	3/4 charged	1.140 - 1.160	Almost discharged
1.200 - 1.220	1/2 charged	1.110 - 1.130	Completely discharged

How to Handle Battery (Cont'd)

CHARGING THE BATTERY

CAUTION:

- **Do not "quick charge" a fully discharged battery.**
- **Keep the battery away from open flame while it is being charged.**
- **When connecting the charger, connect the leads first, then turn on the charger. Do not turn on the charger first, as this may cause a spark.**
- **If battery electrolyte temperature rises above 60°C (140°F), stop charging. Always charge battery at a temperature below 60°C (140°F).**

Charging rates:

Amps	Time
50	1 hour
25	2 hours
10	5 hours
5	10 hours

Do not charge at more than 50 ampere rate.

Note: The ammeter reading on your battery charger will automatically decrease as the battery charges. This indicates that the voltage of the battery is increasing normally as the state of charge improves. The charging amps indicated above are referred to as the initial charge rate.

- If, after charging, the specific gravity of any two cells varies more than .050, the battery should be replaced.
- After the battery is charged, always perform a "capacity test" as follows, to assure that the battery is serviceable.

MEMORY RESET

If the battery is disconnected or goes dead, the following items must be reset:

- Radio AM and FM preset
- Clock

How to Handle Battery (Cont'd)

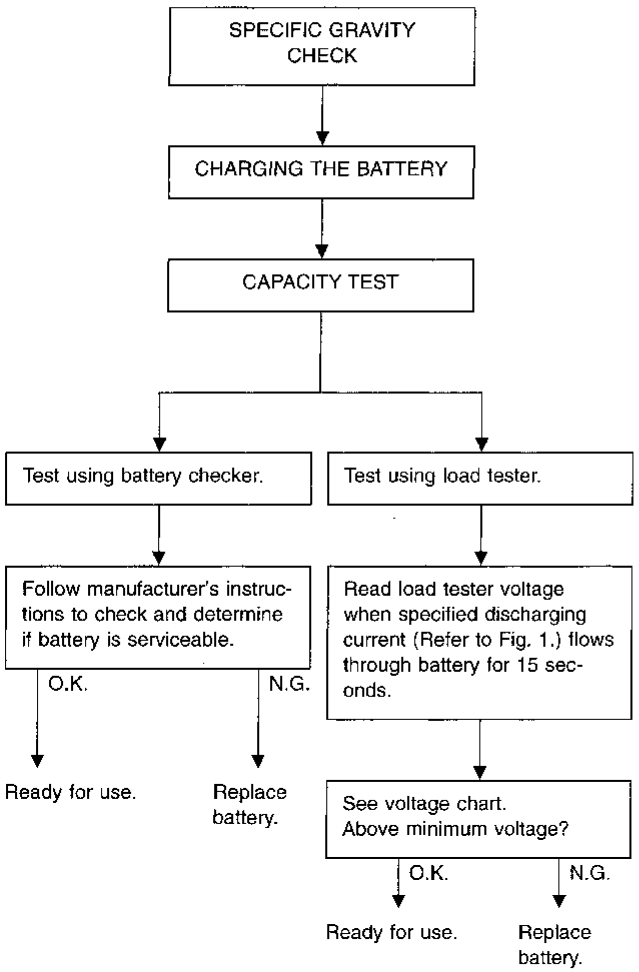

- Check battery type and determine the specified current using the following table.

Fig. 1 DISCHARGING CURRENT (Load tester)

Group size	Current (A)
21R (USA)	245
24R (Canada)	275

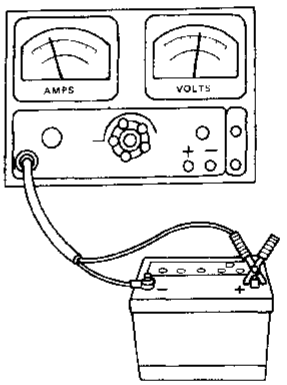

SEL008Z

Voltage chart

Estimated electrolyte temperature °C (°F)	Minimum voltage under 15 second load
21 (70)	9.6
16 (60)	9.5
10 (50)	9.4
4 (40)	9.3
−1 (30)	9.1
−7 (20)	8.9
−12 (10)	8.7
−18 (0)	8.5

Service Data and Specifications (SDS)

Applied area		USA	Canada
Group size		21R	24R
Capacity	V-AH	12-60	12-65
Cold cranking current	A	490	550
Reserve capacity	minutes	88	113

System Description

M/T models

Power is supplied at all times:
- to ignition switch terminal ①
- through green fusible link (located at the battery positive terminal).

With the ignition switch in the START position, power is supplied:
- through terminal ④ of the ignition switch
- to clutch interlock relay terminals ① and ③.

Ground is supplied to clutch interlock relay terminal ② when the clutch pedal is depressed through the clutch interlock switch and body grounds (M49), (M105) and (M160).

The clutch interlock relay is energized and power is supplied:
- from terminal ⑤ of the clutch interlock relay
- to terminal ① of the starter motor windings.

The starter motor plunger closes and provides a closed circuit between the battery and the starter motor. The starter motor is grounded to the engine block. With power and ground supplied, cranking occurs and the engine starts.

A/T models

Power is supplied at all times:
- to ignition switch terminal ①
- through green fusible link (located at the battery positive terminal).

With the ignition switch in the ON or START position, power is supplied:
- to inhibitor switch terminal ①
- through 10A fuse (No. 11, located in the fuse block).

With the ignition switch in the START position, power is supplied:
- from ignition switch terminal ④
- to inhibitor relay terminal ③ (without ASCD) or
- to inhibitor relay terminal ⑦ (with ASCD).

Power is supplied:
- from inhibitor switch terminal ② (with selector lever in the P or N position)
- to inhibitor relay terminal ①.

Ground is supplied:
- to inhibitor relay terminal ②
- through body grounds (M49), (M105), and (M160).

With power and ground supplied, the inhibitor relay is energized and power is supplied:
- from inhibitor relay terminal ⑤ (without ASCD) or
- from inhibitor relay terminal ⑥ (with ASCD)
- to terminal ① of the starter motor windings.

The starter motor plunger closes and provides a closed circuit between the battery and the starter motor. The starter motor is grounded to the engine block. With power and ground supplied, cranking occurs and the engine starts.

Wiring Diagram –START–

M/T MODELS

EL-START-01

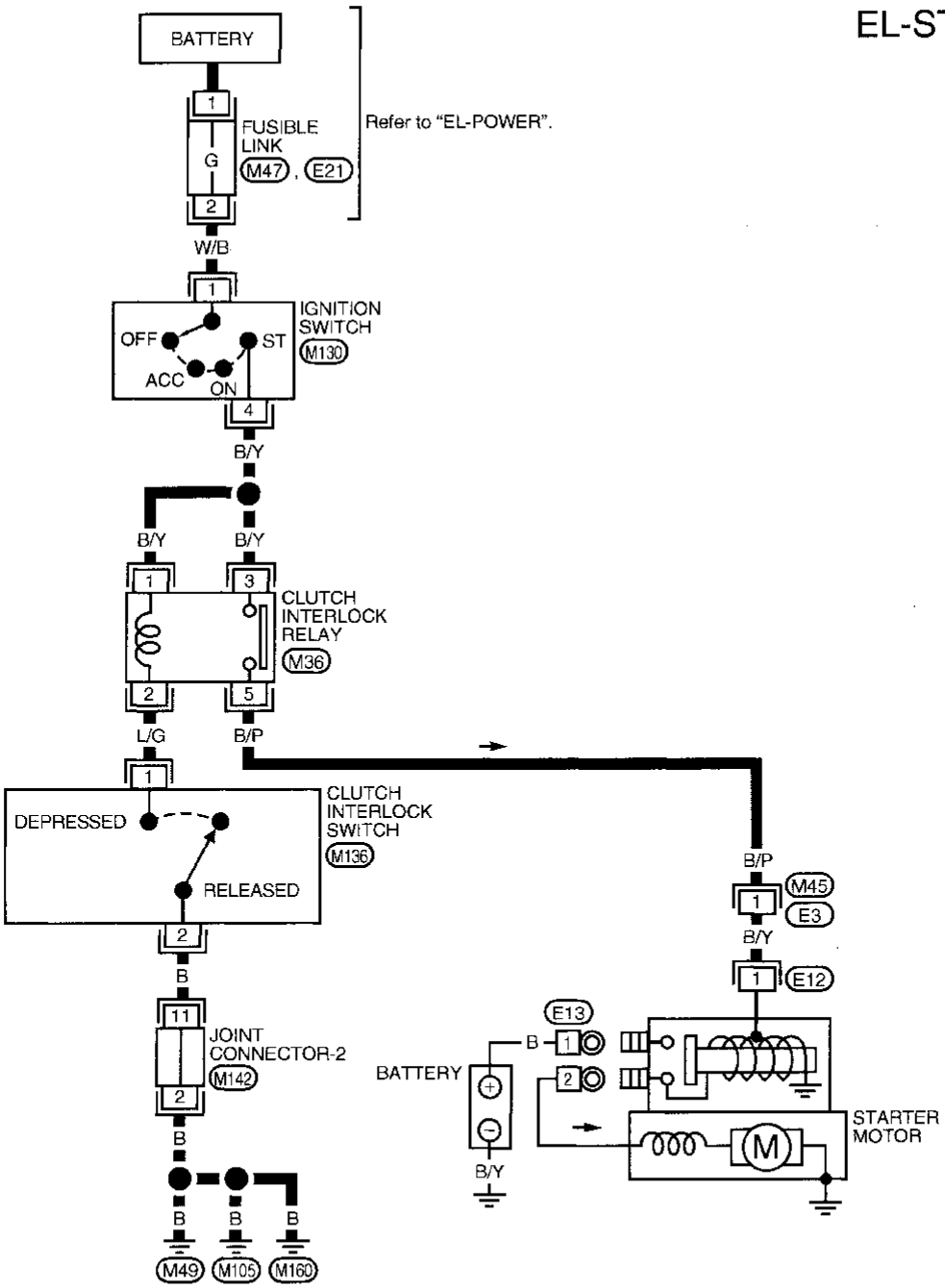

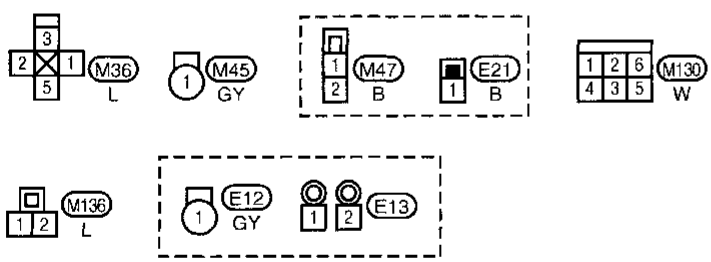

Refer to last page (Foldout page).
M142

AEL869A

Wiring Diagram –START– (Cont'd)

A/T MODELS

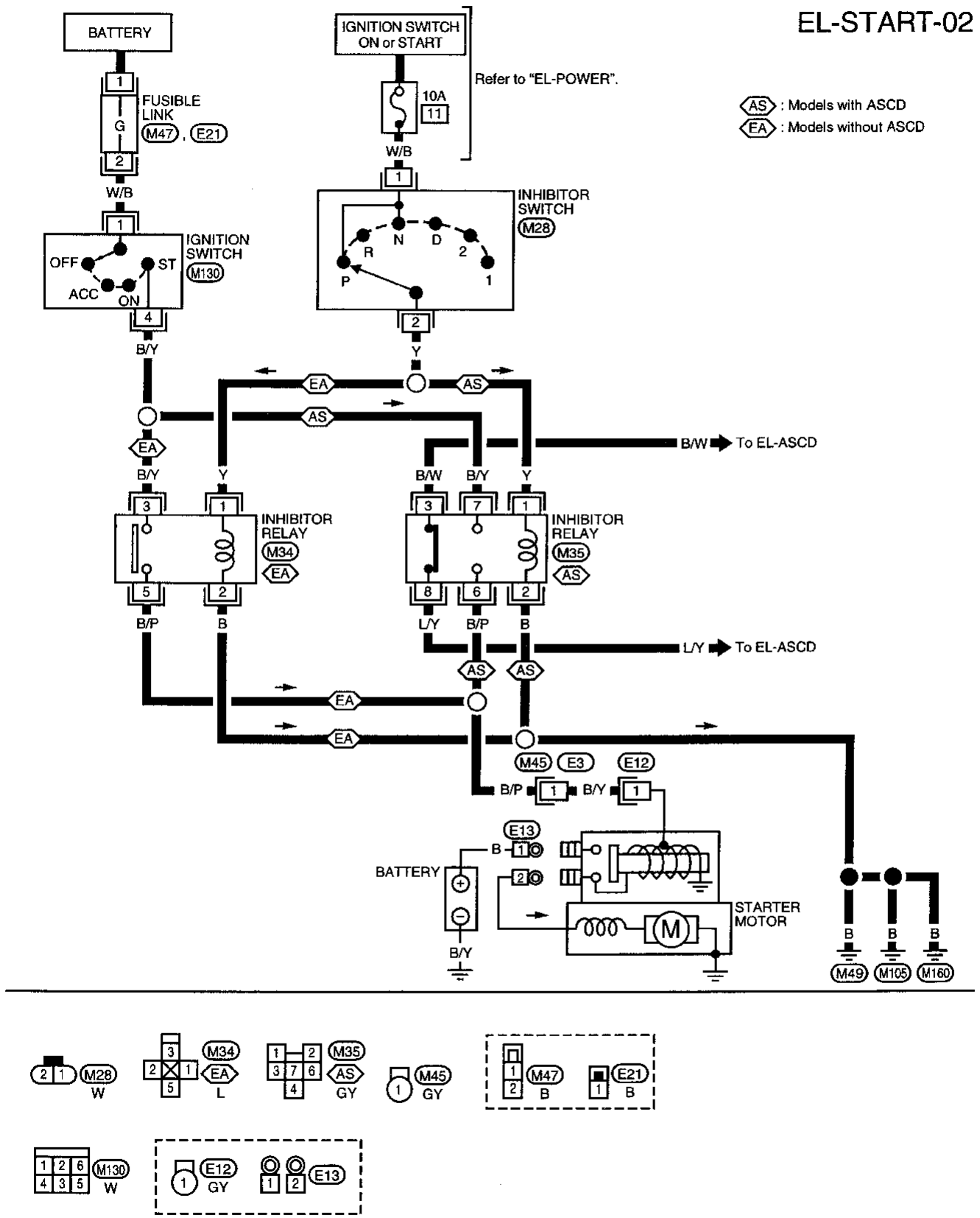

AEL275A-B

Starter

CALIFORNIA, USA

SEC. 233
M003T70381

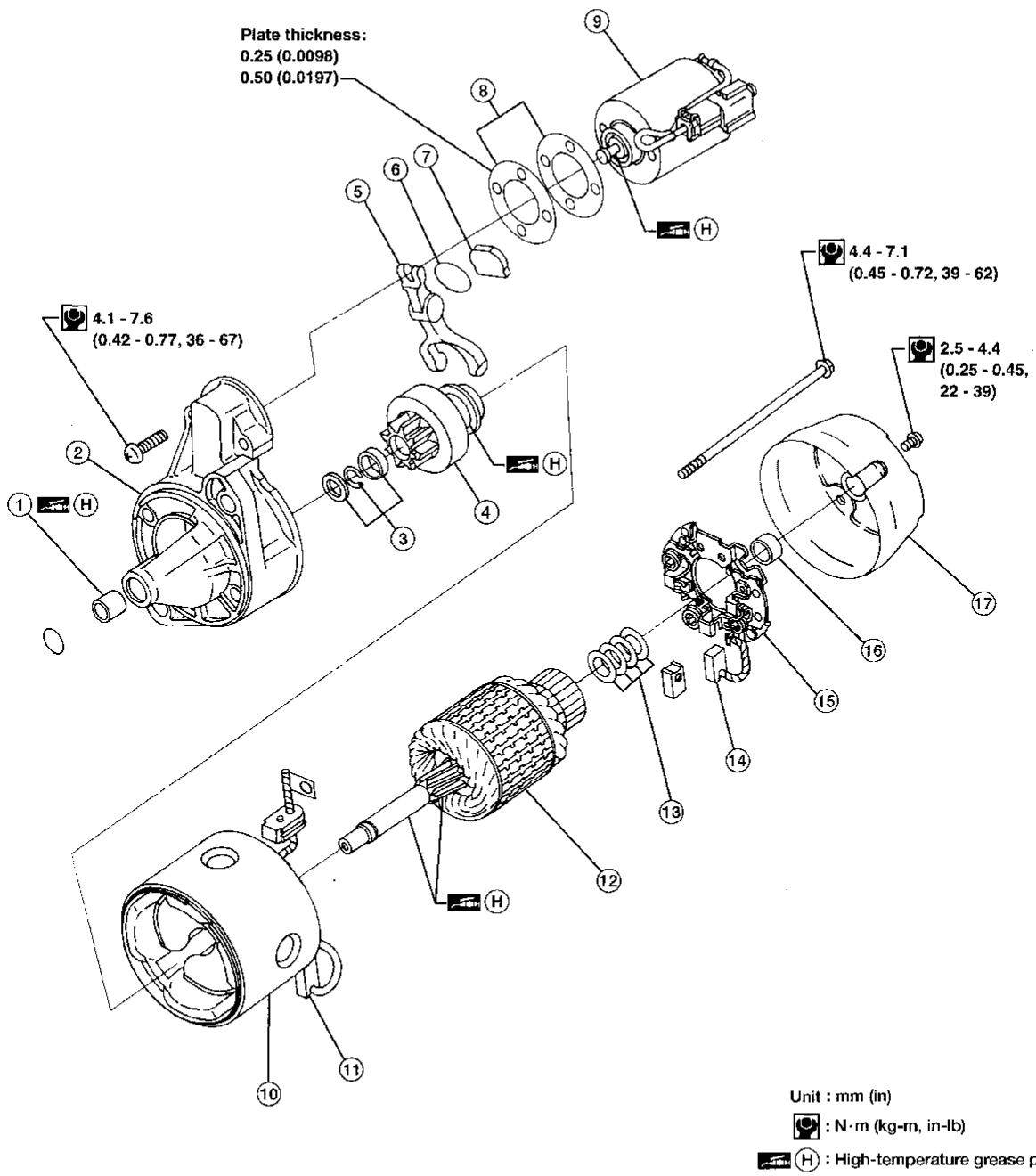

1. Sleeve bearing
2. Gear case
3. Pinion stopper set
4. Pinion assembly
5. Shift lever
6. Plate
7. Packing
8. Adjusting plate
9. Magnetic switch assembly
10. Yoke
11. Brush (+)
12. Armature
13. Washer
14. Brush (–)
15. Brush holder
16. Sleeve bearing
17. Rear cover

Starter (Cont'd)

NON-CALIFORNIA, USA AND CANADA

SEC. 233
M000T60081ZC

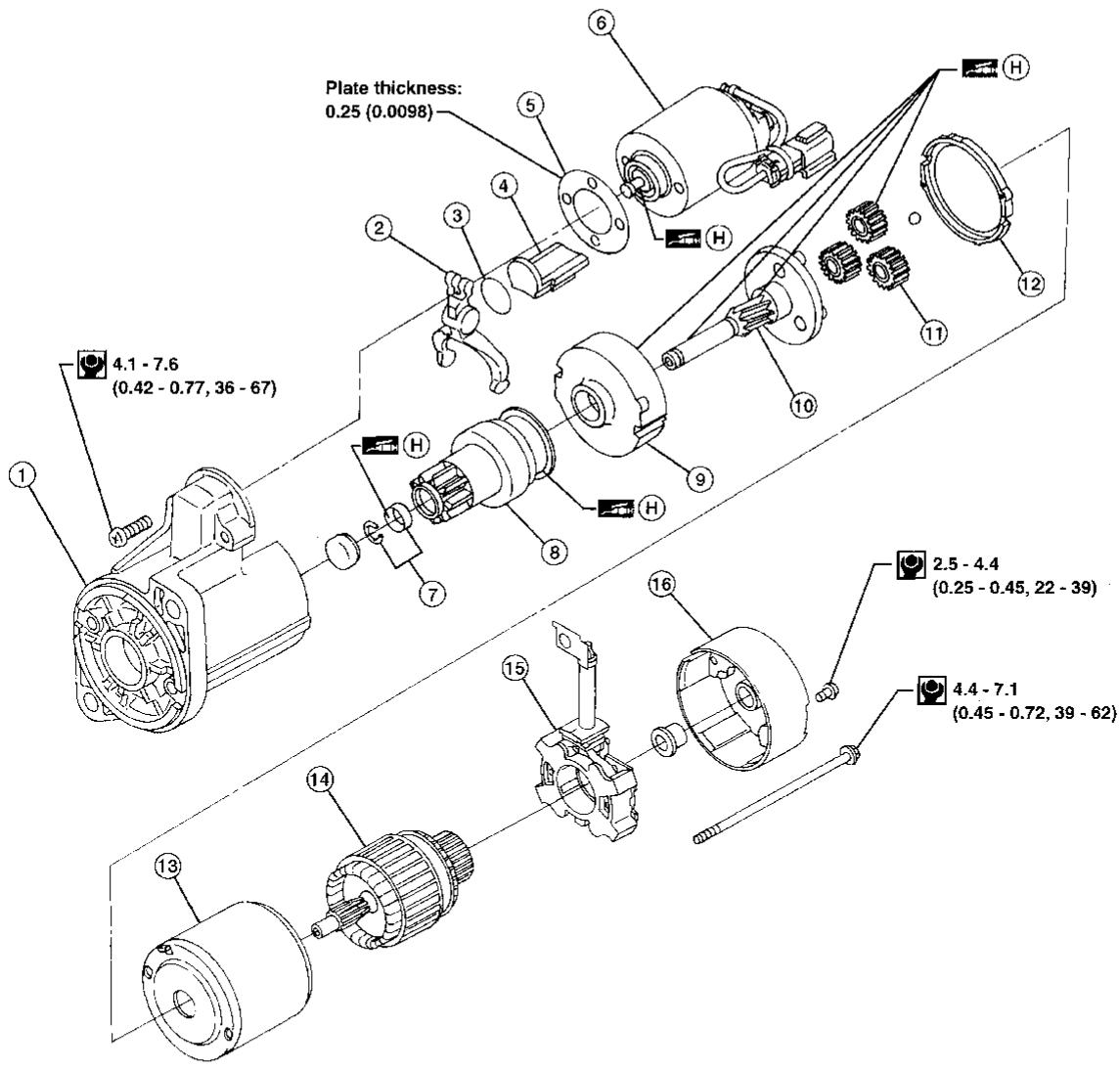

1. Gear case
2. Shift lever
3. Plate
4. Packing
5. Adjusting plate
6. Magnetic switch assembly
7. Pinion stopper set
8. Pinion assembly
9. Internal gear
10. Pinion shaft
11. Planetary gear
12. Packing
13. Yoke
14. Armature
15. Brush holder assembly
16. Rear cover

Pinion/Clutch Check

1. Inspect pinion teeth.
- Replace pinion if teeth are worn or damaged. (Also check condition of ring gear teeth.)
2. Inspect reduction gear teeth.
- Replace reduction gear if teeth are worn or damaged. (Also check condition of armature shaft gear teeth.)
3. Check to see if pinion locks in one direction and rotates smoothly in the opposite direction.
- If it locks or rotates in both directions, or unusual resistance is evident, replace.

Service Data and Specifications (SDS)

STARTER

Type		M003T70381	M000T60081ZC
		MITSUBISHI	
		Non-reduction	Reduction
Applied model		California, USA	Non-California, USA and Canada
System voltage	V	12	
No-load			
Terminal voltage	V	11.5	11.0
Current	A	60 Max.	90 Max.
Motor revolution	rpm	6,500 Min.	2,500 Min.
Minimum diameter of commutator	mm (in)	31.4 (1.236)	28.8 (1.134)
Minimum length of brush	mm (in)	11.5 (0.453)	7.0 (0.276)
Brush spring tension	N (kg, lb)	13.7 - 25.5 (1.4 - 2.6, 3.1 - 5.7)	11.8 - 23.5 (1.20 - 2.40, 2.65 - 5.28)
Clearance of bearing metal and armature shaft	mm (in)	0.2 (0.008)	0.2 (0.008)
Clearance between pinion front edge and pinion stopper	mm (in)	0.5 - 2.0 (0.020 - 0.079)	0.5 - 2.0 (0.020 - 0.079)

System Description

The generator provides DC voltage to operate the vehicle's electrical system and to keep the battery charged. The voltage output is controlled by the IC regulator.

Power is supplied at all times to generator terminal ④ through:
- Black fusible link (located at the battery positive terminal).

Voltage output through generator terminal ①, to charge the battery and operate the vehicle's electrical system, is controlled by the amount of voltage detected by the IC regulator at terminal ④.

Terminal ② of the generator supplies ground through body ground (E6).

With the ignition switch in the ON or START position, power is supplied:
- through 10A fuse (No. 11, located in the fuse block)
- to combination meter terminal ⑰ for the charge warning lamp.

Ground is supplied to terminal ㉓ of the combination meter through terminal ③ of the generator. With power and ground supplied, the charge warning lamp will illuminate. When the generator is providing sufficient voltage with the engine running, the ground is opened and the charge warning lamp will go off.

If the charge warning lamp illuminates with the engine running, a fault is indicated. Refer to "Trouble Diagnoses", "CHARGING SYSTEM", EL-27.

Wiring Diagram – CHARGE–

EL-CHARGE-01

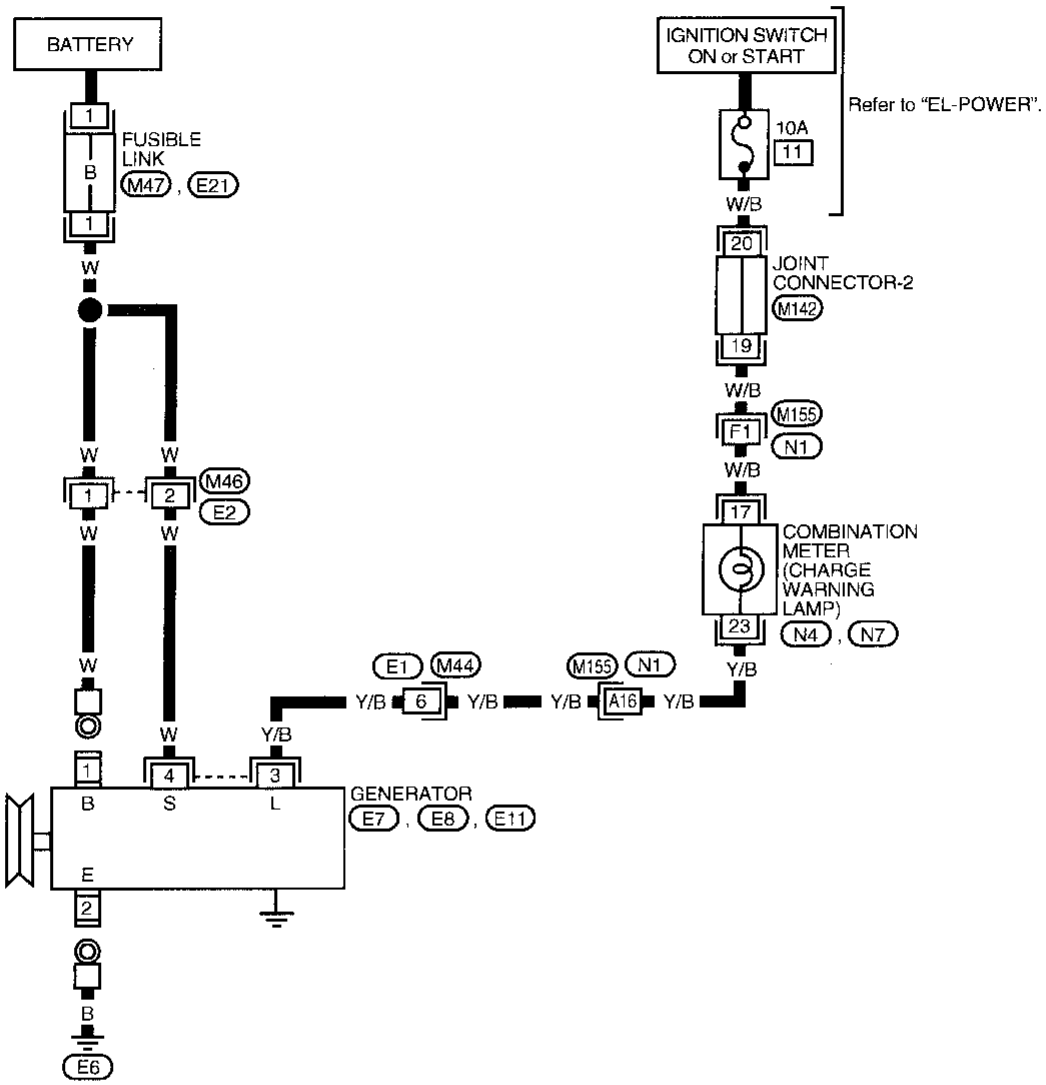

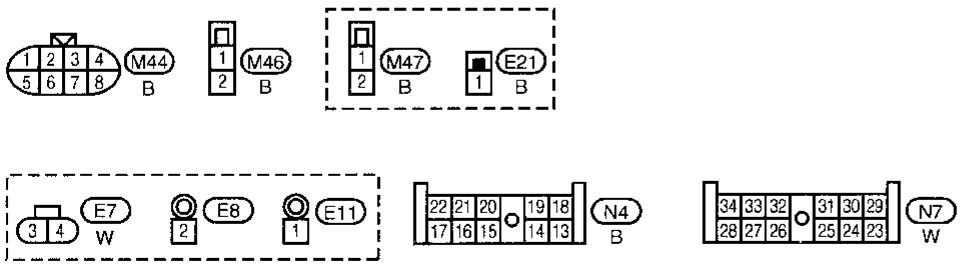

Refer to last page (Foldout page).
M142
M155 , N1

AEL870A

Trouble Diagnoses

Before conducting an alternator test, make sure that the battery is fully charged. A 30-volt voltmeter and suitable test probes are necessary for the test. The alternator can be checked easily by referring to the Inspection Table.

- **Before starting, inspect the fusible link.**
- **Use fully charged battery.**

WITH IC REGULATOR

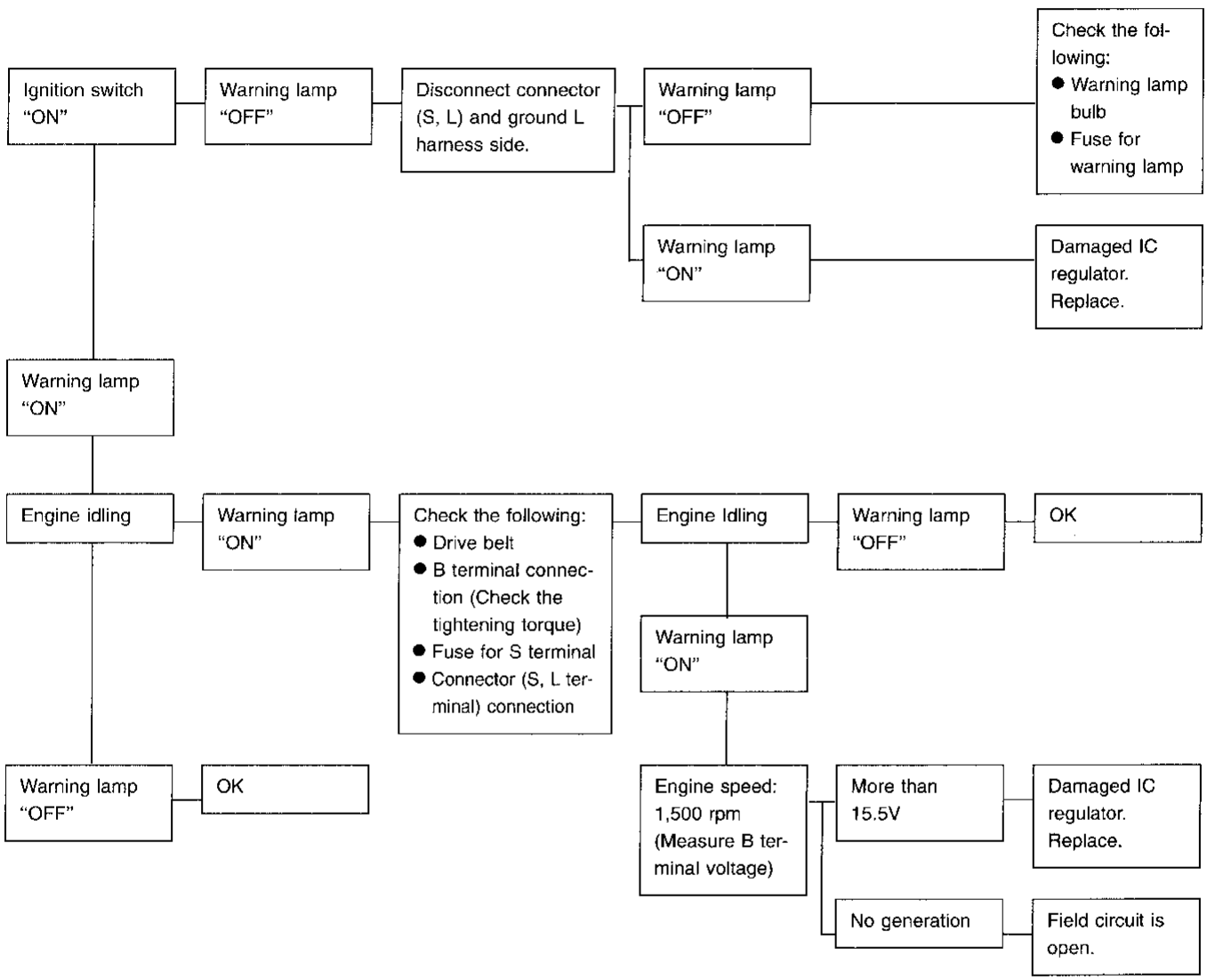

Warning lamp: "CHARGE" warning lamp in combination meter

*** : When field circuit is open, check condition of rotor coil, rotor slip ring and brush. If necessary, replace faulty parts with new ones.**

MALFUNCTION INDICATOR

The IC regulator warning function activates to illuminate "CHARGE" warning lamp, if any of the following symptoms occur while alternator is operating:

- B terminal is disconnected.
- S terminal is disconnected or related circuit is open.
- Field circuit is open.
- Excessive voltage is produced.

Generator

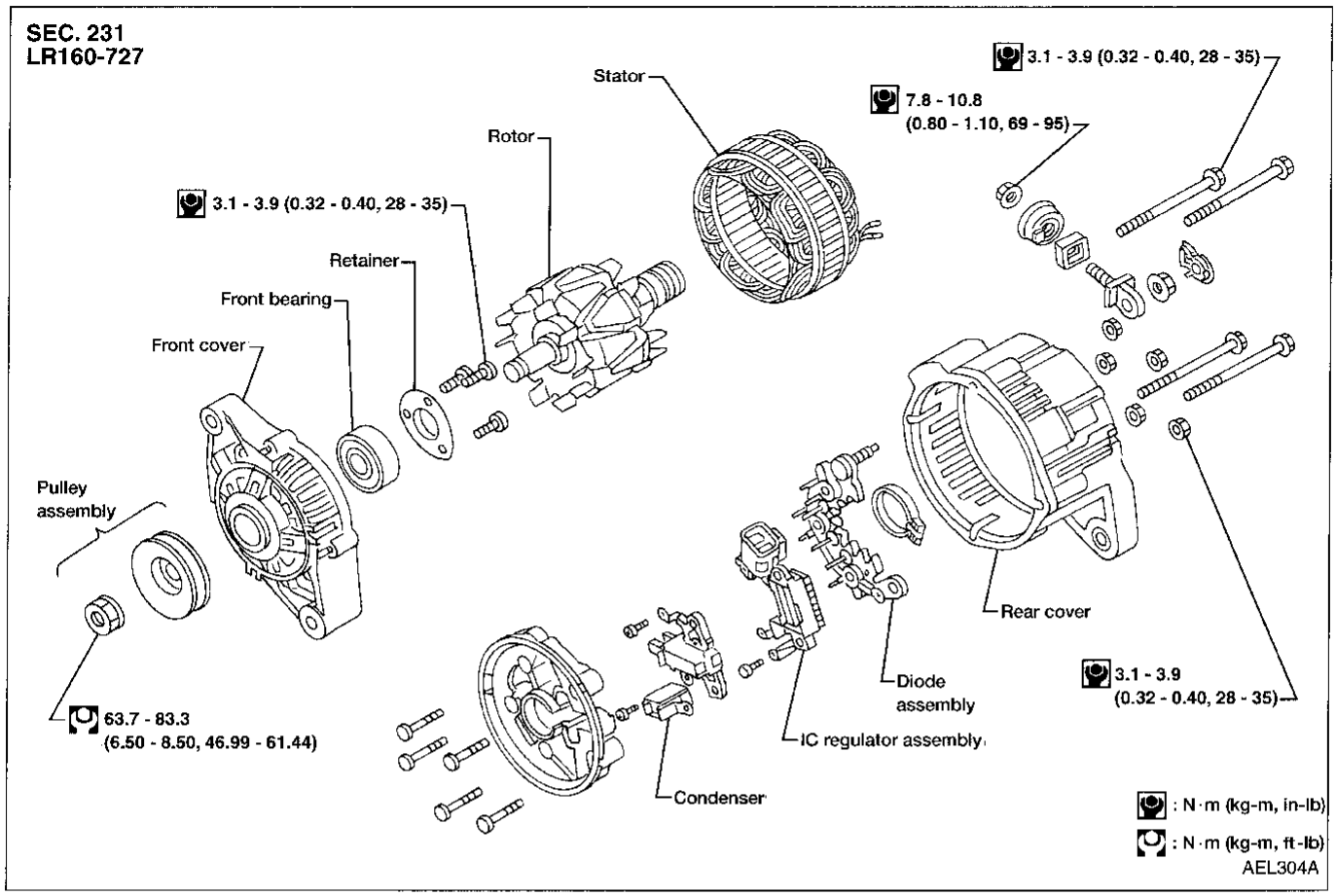
SEC. 231
LR160-727
Stator
3.1 - 3.9 (0.32 - 0.40, 28 - 35)
7.8 - 10.8
(0.80 - 1.10, 69 - 95)
Rotor
3.1 - 3.9 (0.32 - 0.40, 28 - 35)
Retainer
Front bearing
Front cover
Pulley
assembly
Rear cover
Diode
assembly
3.1 - 3.9
(0.32 - 0.40, 28 - 35)
63.7 - 83.3
(6.50 - 8.50, 46.99 - 61.44)
IC regulator assembly
Condenser
: N·m (kg-m, in-lb)
: N·m (kg-m, ft-lb)
AEL304A

Diode Check

MAIN DIODES

- In order to check diodes, they must be unsoldered from the stator.
- Use an ohmmeter to check condition of diodes as indicated in chart below.
- If any of the test results are not satisfactory, replace diode assembly.

	Ohmmeter probes		Judgement
	Positive ⊕	Negative ⊖	
Diodes check (Positive side)	Positive diode plate	Diode terminals	Diode conducts in only one direction.
	Diode terminals	Positive diode plate	
Diodes check (Negative side)	Negative diode plate	Diode terminals	Diode conducts in only one direction.
	Diode terminals	Negative diode plate	

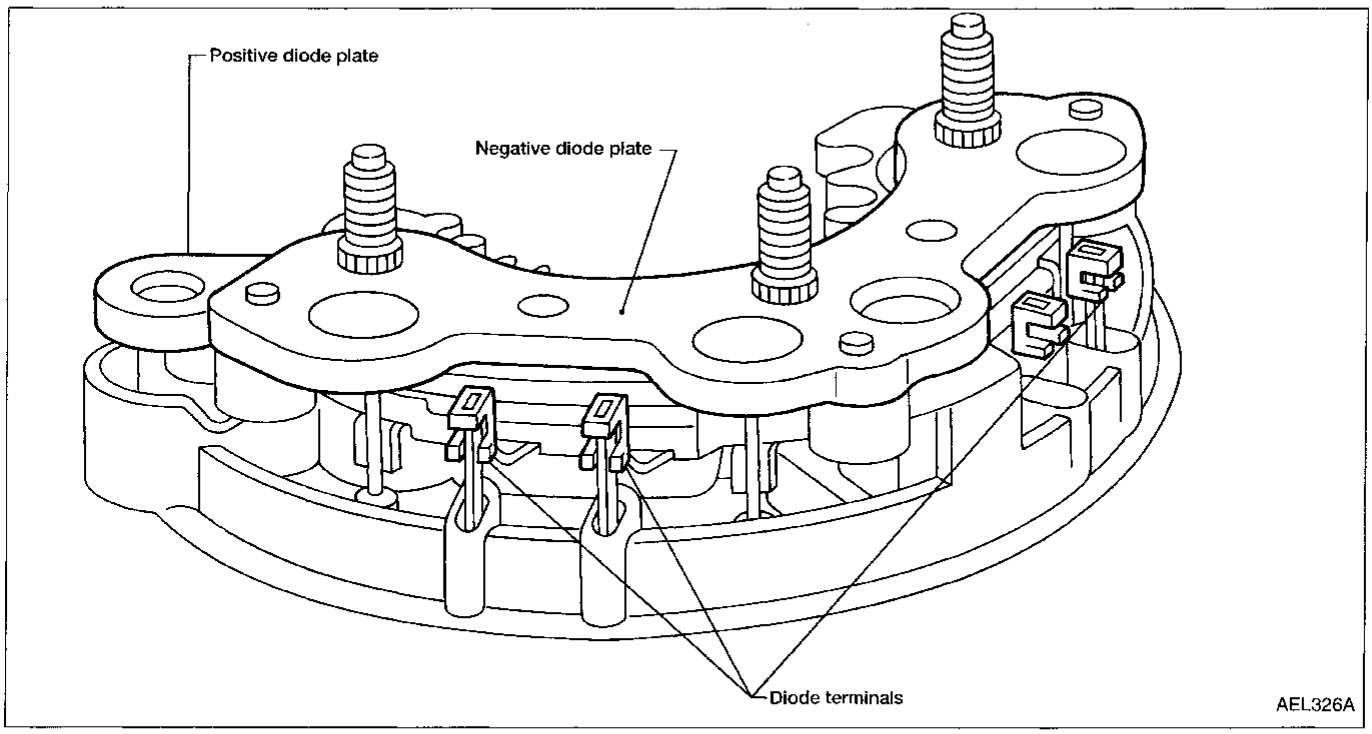

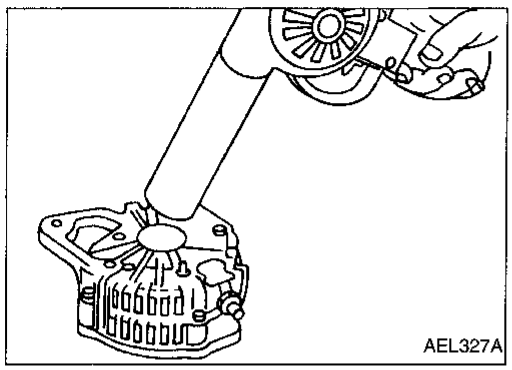

Disassembly and Assembly

1. Remove rear cover.
- Heat rear cover, using heat gun, to 50°C (90°F) above room temperature to prevent bearing damage.

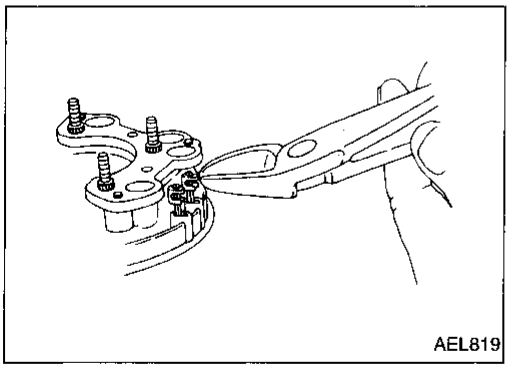

2. Disconnect stator/diode.
- Cut diode terminals.
- Unsolder stator coil leads.

CAUTION:
Unsolder stator coil leads as fast as possible to avoid damaging diodes.

3. Remove stator and rotor.
4. Remove bearing retainer and bearing.
5. Assemble in reverse of disassembly.

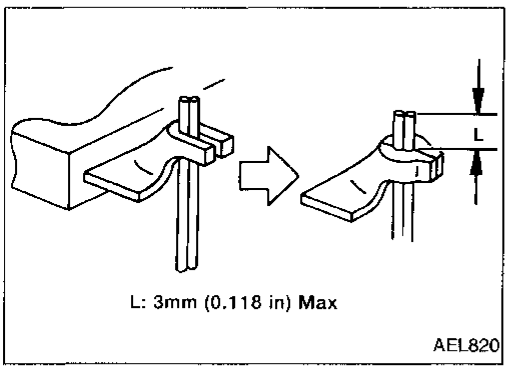

- Insert stator coil lead into lower portion of diode terminal.
- Using pliers, crimp diode terminal around stator coil lead.
- Be sure stator coil leads do not protrude more than 3 mm (0.118 in) past diode terminal.

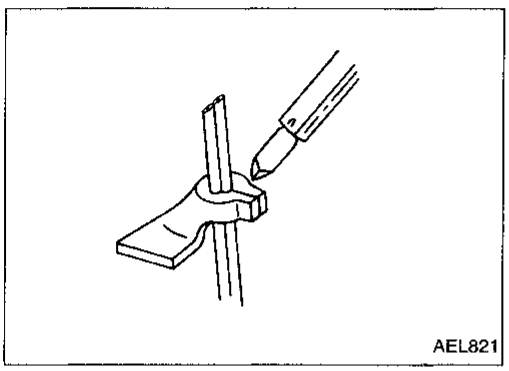

- Solder stator coil lead and diode terminals.

CAUTION:
Solder stator coil leads and diode terminals as fast as possible to avoid damaging diodes. Use 9/1 Pb/Sn solder in assembly.

Disassembly and Assembly (Cont'd)

REAR COVER INSTALLATION

1. Before installing front cover with pulley and rotor with rear cover, push brush up with fingers and retain brush by inserting brush lift wire into brush lift hole from outside.
2. After installing front and rear sides of generator, pull out brush lift wire.

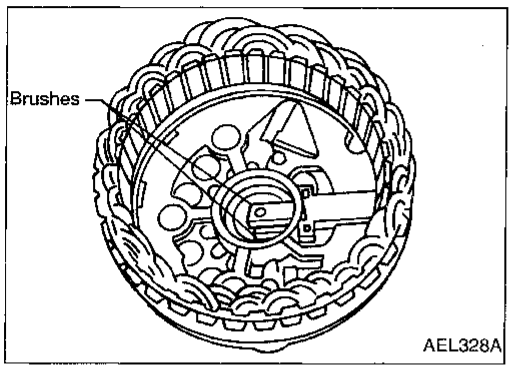

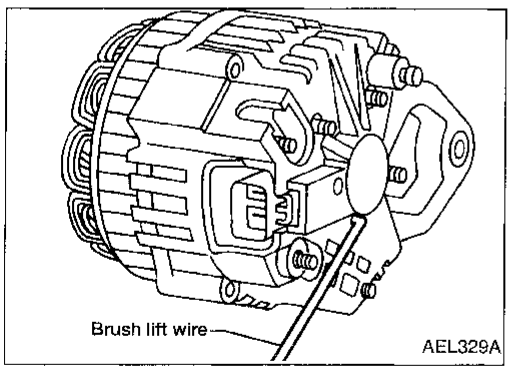

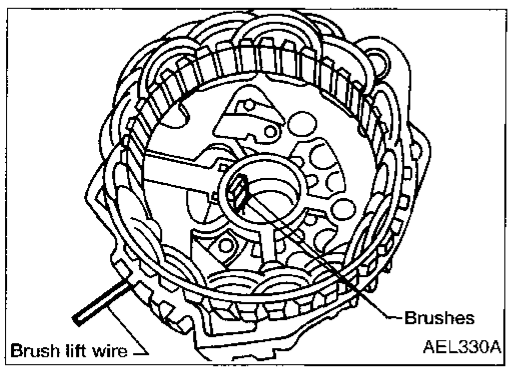

Service Data and Specifications (SDS)

GENERATOR

Type		LR160-727
Nominal rating	V-A	12-60
Ground polarity		Negative
Minimum revolution under no-load (When 13.5 volts is applied)	rpm	Less than 1,000
Hot output current (When 13.5 volts is applied)	A/rpm	More than 17/1,300 More than 48/2,500 More than 57/5,000
Regulated output voltage	V	14.1 - 14.7
Minimum length of brush	mm (in)	6.0 (0.24)
Slip ring minimum outer diameter	mm (in)	More than 26.0 (1.024)
Rotor (Field coil) resistance	Ω	2.58

Combination Switch/Check

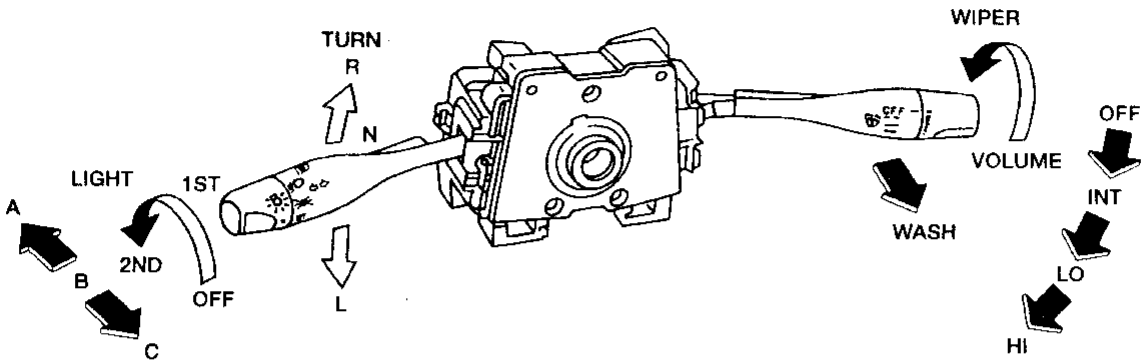

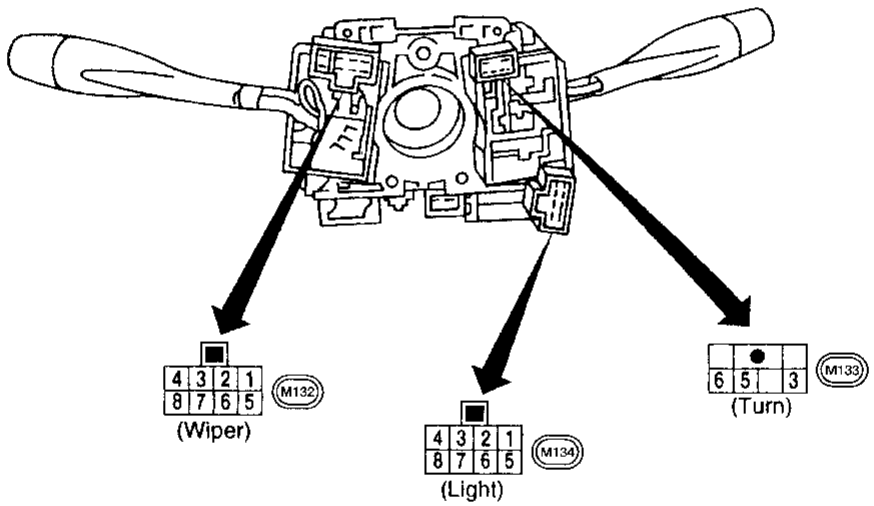

LIGHTING SWITCH

	OFF			1ST			2ND		
	A	B	C	A	B	C	A	B	C
2			○			○	○	○	○
3			○			○	○		○
4								○	
6			○			○	○	○	○
7			○			○	○		○
8								○	
1				○	○	○	○	○	○
5				○	○	○	○	○	○

WIPER SWITCH

	OFF	INT	LO	HI	WASH
8	○	○			
4	○	○	○		
7		○			
3				○	
6		○	○	○	○
5					○

TURN SIGNAL SWITCH

	R	N	L
5	○		○
6	○		
3			○

INTERMITTENT WIPER VOLUME

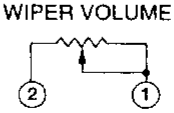

AEL895A

Combination Switch/Replacement

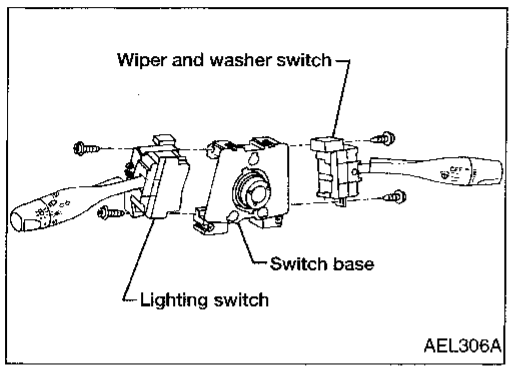

- Each switch can be replaced without removing combination switch base.

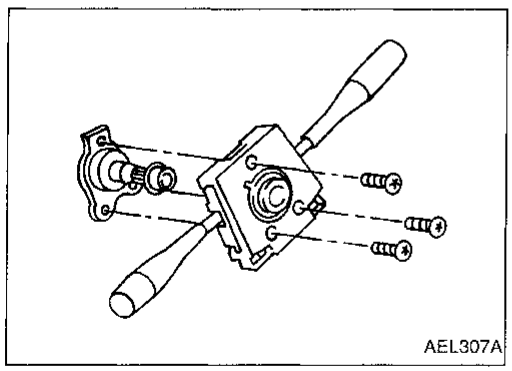

- To remove combination switch base, remove base attaching screws.

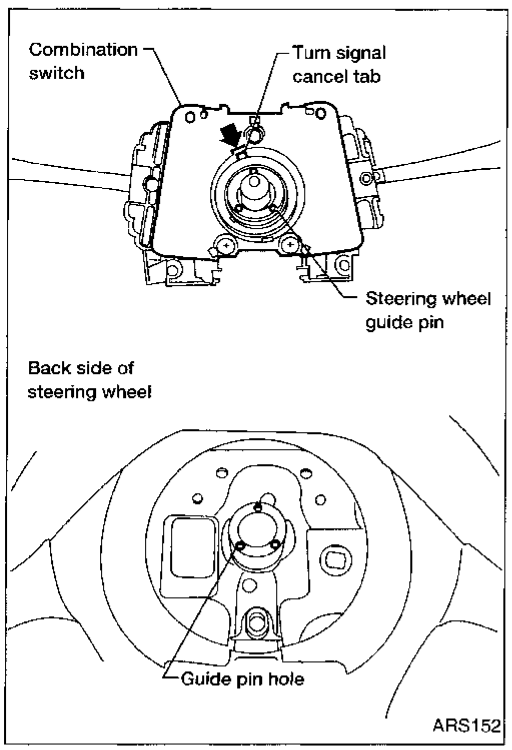

- Before installing the steering wheel, align the turn signal cancel tab with the notch of combination switch. Refer to RS section ("INSTALLATION", Air Bag Module and Spiral Cable").

Steering Switch/Check

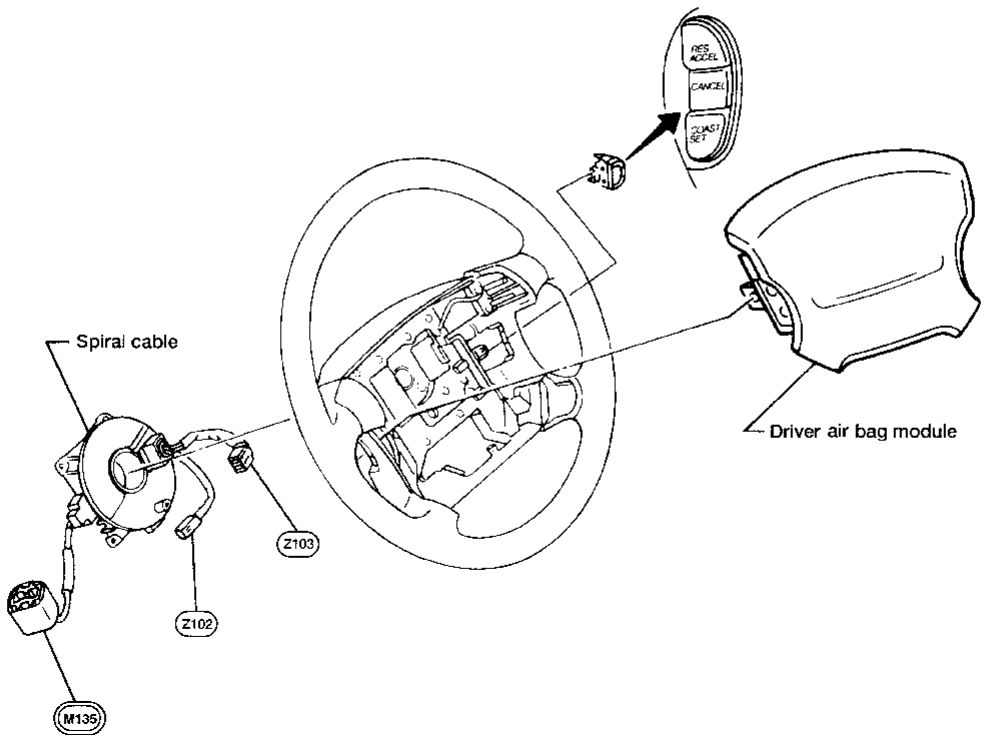

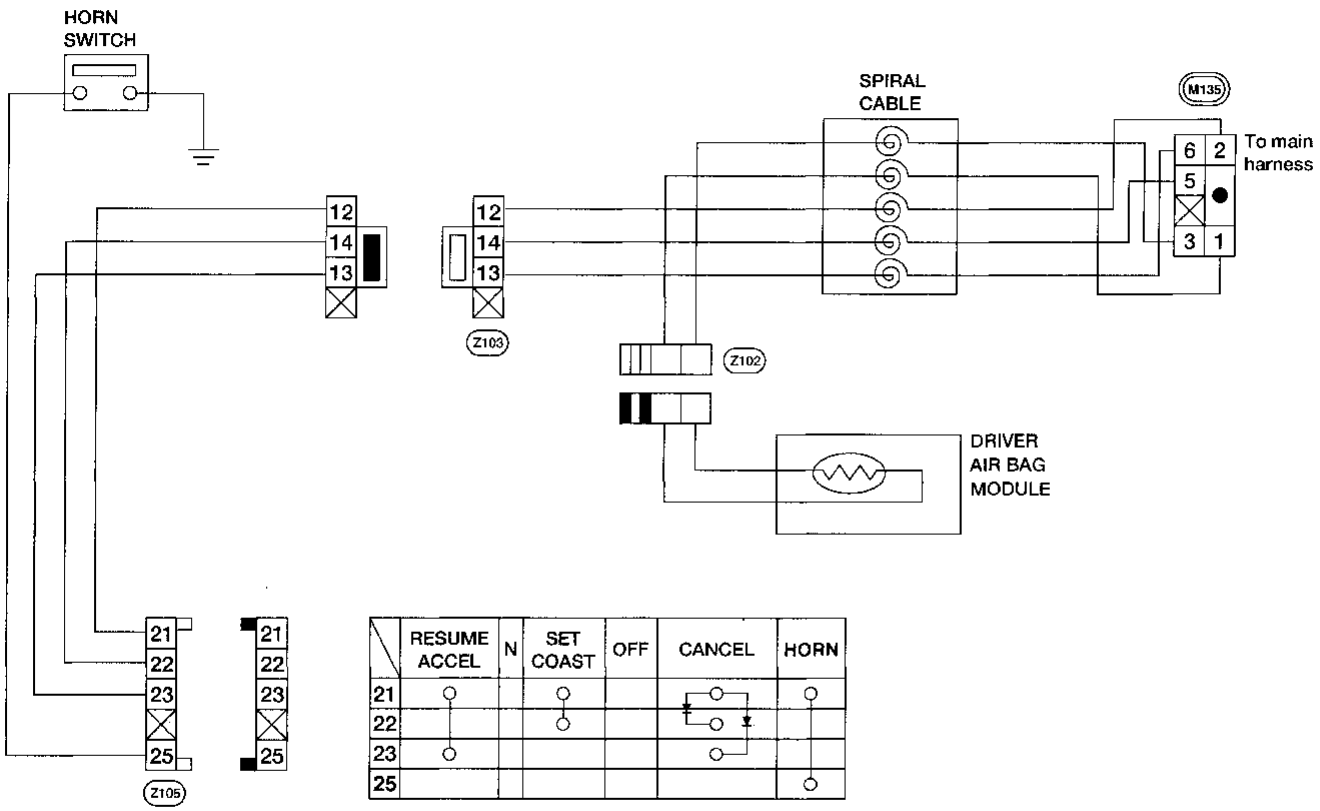

	RESUME ACCEL	N	SET COAST	OFF	CANCEL	HORN
21	○		○		○	○
22			○		○	
23	○				○	
25						○

AEL896A

System Description (For USA)

The headlamps are controlled by the lighting switch which is built into the combination switch.
Power is supplied at all times:

- through 15A fuse (No. 12 , located in the fuse block)
- to lighting switch terminal ⑥, and
- through 15A fuse (No. 13 , located in the fuse block)
- to lighting switch terminal ②.

Low beam operation

When the lighting switch is turned to the 2ND position and placed in LOW ("B") position, power is supplied:

- from lighting switch terminal ⑧
- to terminal ① of the LH headlamp, and
- from lighting switch terminal ④
- to terminal ① of the RH headlamp.

Terminal ③ of each headlamp supplies ground through body grounds M49 , M105 and M160 .
With power and ground supplied, the headlamp(s) will illuminate.

High beam operation/flash-to-pass operation

When the lighting switch is turned to the 2ND position and placed in HIGH ("A") position or the lighting switch is placed in the PASS ("C") position, power is supplied:

- from lighting switch terminal ⑦
- to terminal ② of the LH headlamp, and
- from lighting switch terminal ③
- to terminal ② of the RH headlamp, and
- to combination meter terminal ⑩ for the hi beam indicator.

Ground is supplied to terminal ⑪ of the combination meter and terminal ③ of each headlamp through body grounds M49 , M105 , and M160 .
With power and ground supplied, the high beams and the hi beam indicator illuminate.

Wiring Diagram (For USA) – H/LAMP–

EL-H/LAMP-01

BATTERY

15A 12 R/W

15A 13 R

Refer to "EL-POWER".

R/W 6

R 2

LIGHTING SWITCH M134

OFF 2ND 1ST LOW PASS HIGH

OFF 2ND 1ST LOW PASS HIGH

LOW PASS HIGH

LOW PASS HIGH

8 R/G

7 R/L

4 R/B

3 R/Y

M155 N1 R/Y E2 R/Y

R/Y 10 COMBINATION METER (HIGH BEAM INDICATOR) N5 11

R/G 1 R/L 2 HEADLAMP LH M66 LOW HIGH 3 B

R/B 1 R/Y 2 HEADLAMP RH M51 LOW HIGH 3 B

B D15 N1 M155 B

JOINT CONNECTOR-2 M142 B 2 1 B

B M49

B M105

B M160

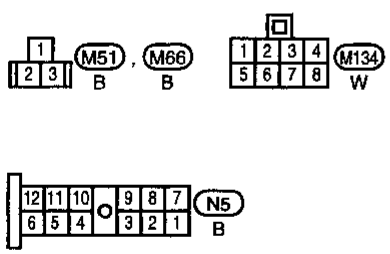

Refer to last page (Foldout page).
M142
M155 , N1

AEL271A

Trouble Diagnoses (For USA)

Symptom	Possible cause	Repair order
LH headlamps do not operate.	1. Bulb 2. Grounds (M49), (M105) and (M160) 3. 15A fuse 4. Lighting switch	1. Check bulb. 2. Check grounds (M49), (M105) and (M160). 3. Check 15A fuse (No. 12, located in fuse block). Verify battery positive voltage is present at terminal (6) of lighting switch. 4. Check lighting switch.
RH headlamps do not operate.	1. Bulb 2. Grounds (M49), (M105) and (M160) 3. 15A fuse 4. Lighting switch	1. Check bulb. 2. Check grounds (M49), (M105) and (M160). 3. Check 15A fuse (No. 13, located in fuse block). Verify battery positive voltage is present at terminal (2) of lighting switch. 4. Check lighting switch.
LH high beam does not operate, but LH low beam operates.	1. Bulb 2. Open in LH high beam circuit 3. Lighting switch	1. Check bulb. 2. Check R/L wire between lighting switch and LH headlamp for an open circuit. 3. Check lighting switch.
LH low beam does not operate, but LH high beam operates.	1. Bulb 2. Open in LH low beam circuit 3. Lighting switch	1. Check bulb. 2. Check R/G wire between lighting switch and LH headlamp for an open circuit. 3. Check lighting switch.
RH high beam does not operate, but RH low beam operates.	1. Bulb 2. Open in RH high beam circuit 3. Lighting switch	1. Check bulb. 2. Check R/Y wire between lighting switch and RH headlamp for an open circuit. 3. Check lighting switch.
RH low beam does not operate, but RH high beam operates.	1. Bulb 2. Open in RH low beam circuit 3. Lighting switch	1. Check bulb. 2. Check R/B wire between lighting switch and RH headlamp for an open circuit. 3. Check lighting switch.
High beam indicator does not work.	1. Bulb 2. Grounds (M49), (M105) and (M160) 3. Open in high beam circuit	1. Check bulb in combination meter. 2. Check grounds (M49), (M105) and (M160). 3. Check R/Y wire between lighting switch and combination meter for an open circuit.

System Description (For Canada)

The headlamp system for Canada vehicles contains a daytime light control unit that activates the high beam headlamps at approximately half illumination whenever the engine is running. If the parking brake is applied before the engine is started the daytime lights will not be illuminated. The daytime lights will illuminate once the parking brake is released. Thereafter, the daytime lights will continue to operate even when the parking brake is applied.

Power is supplied at all times:
- through 15A fuse (No. 12 , located in the fuse block)
- to daytime light control unit terminal ③ and
- to lighting switch terminal ⑥.

Power is also supplied at all times:
- through 15A fuse (No. 13 , located in the fuse block)
- to daytime light control unit terminal ② and
- to lighting switch terminal ②.

With the ignition switch in the ON or START position, power is supplied:
- through 10A fuse (No. 11 , located in the fuse block)
- to daytime light control unit terminal ⑫.

With the ignition switch in the START position, power is supplied:
- through ignition switch terminal ④
- to daytime light control unit terminal ①.

Ground is supplied to daytime light control unit terminal ⑨ through body grounds M49 , M105 and M160 .

HEADLAMP OPERATION

Low beam operation

When the lighting switch is moved to the 2ND position and placed in LOW ("B") position, power is supplied:
- from lighting switch terminal ④
- to RH headlamp terminal ①.

Ground is supplied to RH headlamp terminal ③ through body grounds M49 , M105 and M160 .

Also, when the lighting switch is turned to the 2ND position and placed in LOW ("B") position, power is supplied:
- from lighting switch terminal ⑧
- to LH headlamp terminal ①.

Ground is supplied:
- to LH headlamp terminal ③
- from daytime light control unit terminal ⑦
- through daytime light control unit terminal ⑨
- through body grounds M49 , M105 and M160 .

With power and ground supplied, the low beam headlamps illuminate.

High beam operation

When the lighting switch is turned to the 2ND position and placed in HIGH ("A") position, or the lighting switch is placed in the PASS ("C") position, power is supplied:
- from lighting switch terminal ③
- to RH headlamp terminal ②.

Also, when the lighting switch is moved to the 2ND position and placed in HIGH ("A") position, or the lighting switch is placed in the PASS ("C") position, power is supplied:
- from lighting switch terminal ⑦
- to daytime light control unit terminal ⑤
- through daytime light control unit terminal ⑥
- to LH headlamp terminal ②.

Ground is supplied in the same manner as low beam operation.

With power and ground supplied, the high beam headlamps illuminate.

System Description (For Canada) (Cont'd)

DAYTIME LIGHT OPERATION

With the engine running and the lighting switch in the OFF or 1st position, power is supplied:

- to daytime light control unit terminal ③
- through daytime light control unit terminal ⑥
- to LH headlamp terminal ②
- through LH headlamp terminal ③
- to daytime light control unit terminal ⑦
- through daytime light control unit terminal ⑧
- to RH headlamp terminal ②.

Ground is supplied to RH headlamp terminal ③ through body grounds (M49), (M105) and (M160).
Because the high beam headlamps are now wired in series, they operate at half illumination.

Operation (Daytime light system for Canada)

The headlamps' high beams automatically turn on after starting the engine with the lighting switch in OFF or 1st position. Lighting switch operations other than the above are the same as conventional light systems.

Engine		With engine stopped									With engine running								
Lighting switch		OFF			1ST			2ND			OFF			1ST			2ND		
		A	B	C	A	B	C	A	B	C	A	B	C	A	B	C	A	B	C
Headlamp	High beam	X	X	○	X	X	○	○	X	○	△*	△*	○	△*	△*	○	○	X	○
	Low beam	X	X	X	X	X	X	X	○	X	X	X	X	X	X	X	X	○	X
Parking and tail lamp		X	X	X	○	○	○	○	○	○	X	X	X	○	○	○	○	○	○
License and instrument illumination lamp		X	X	X	○	○	○	○	○	○	X	X	X	○	○	○	○	○	○

○ : Lamp ON
X : Lamp OFF
△ : Lamp dims
□: Added functions
* : When starting the engine with the parking brake released, the daytime light will come ON.
When starting the engine with the parking brake applied, the daytime light won't come ON.

Schematic (For Canada)

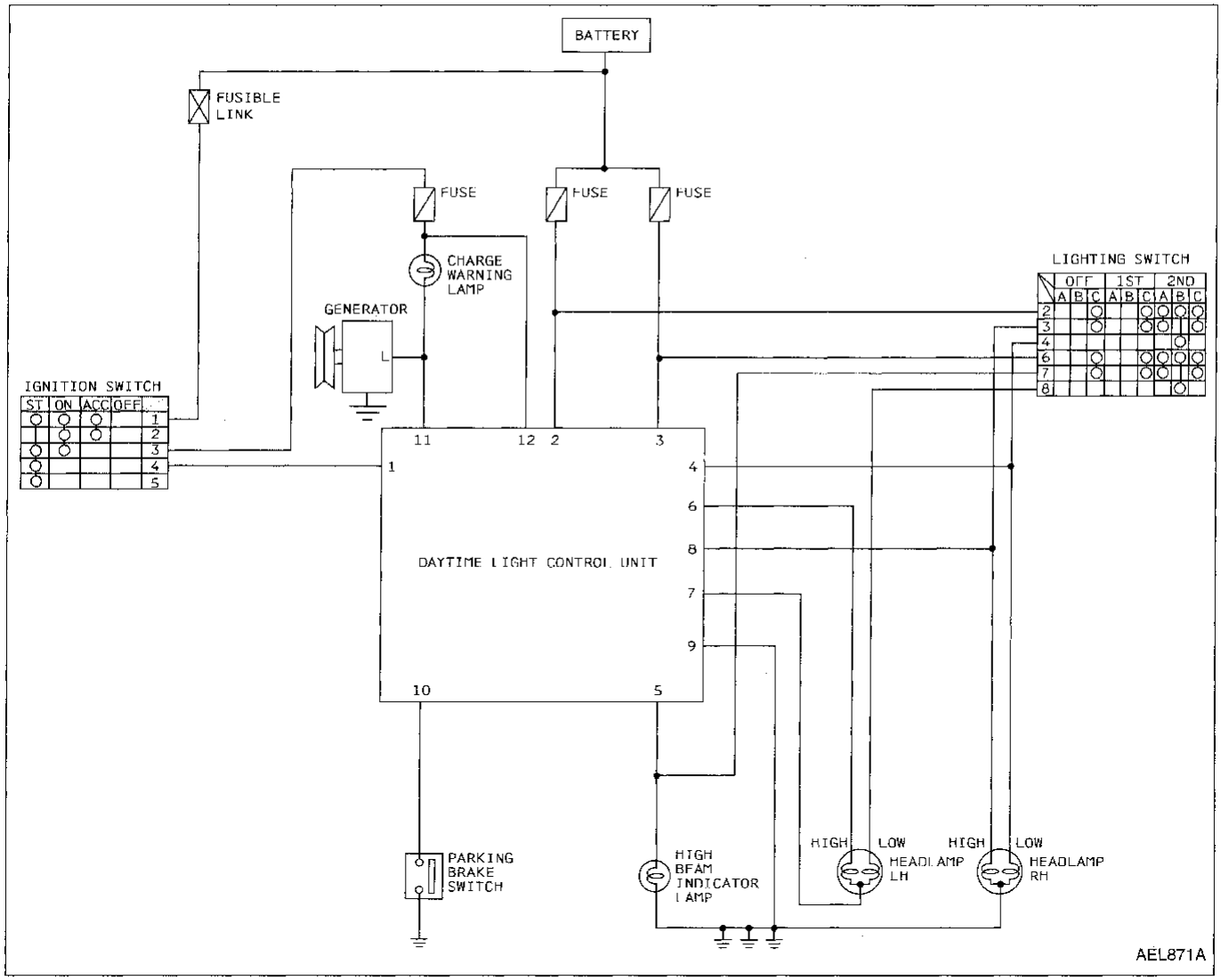

NOTES

Wiring Diagram (For Canada) –DTRL–

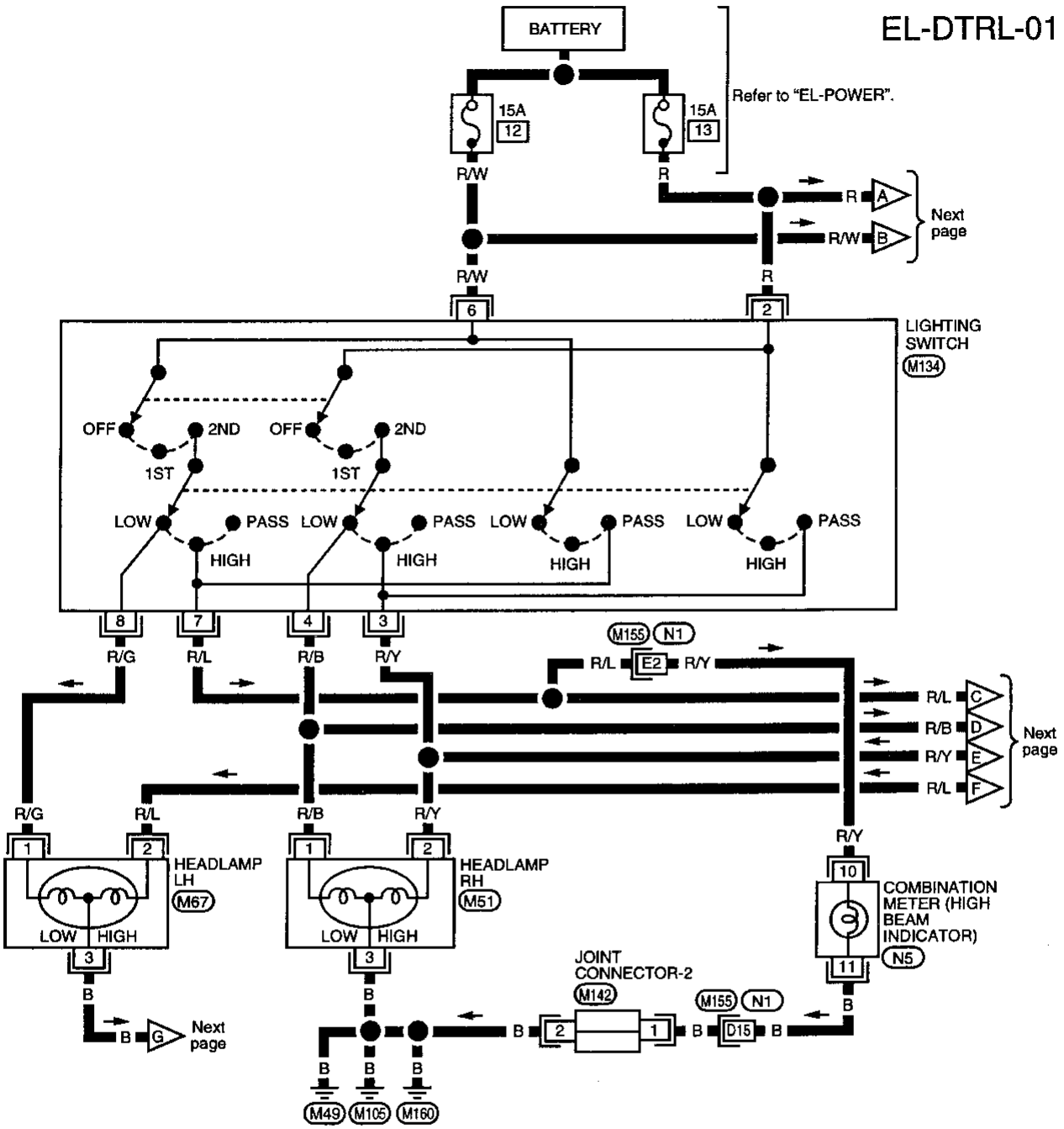

Refer to last page (Foldout page).
M142
M155, N1

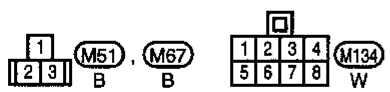

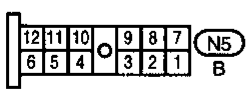

AEL273A-A

Wiring Diagram (For Canada) –DTRL– (Cont'd)

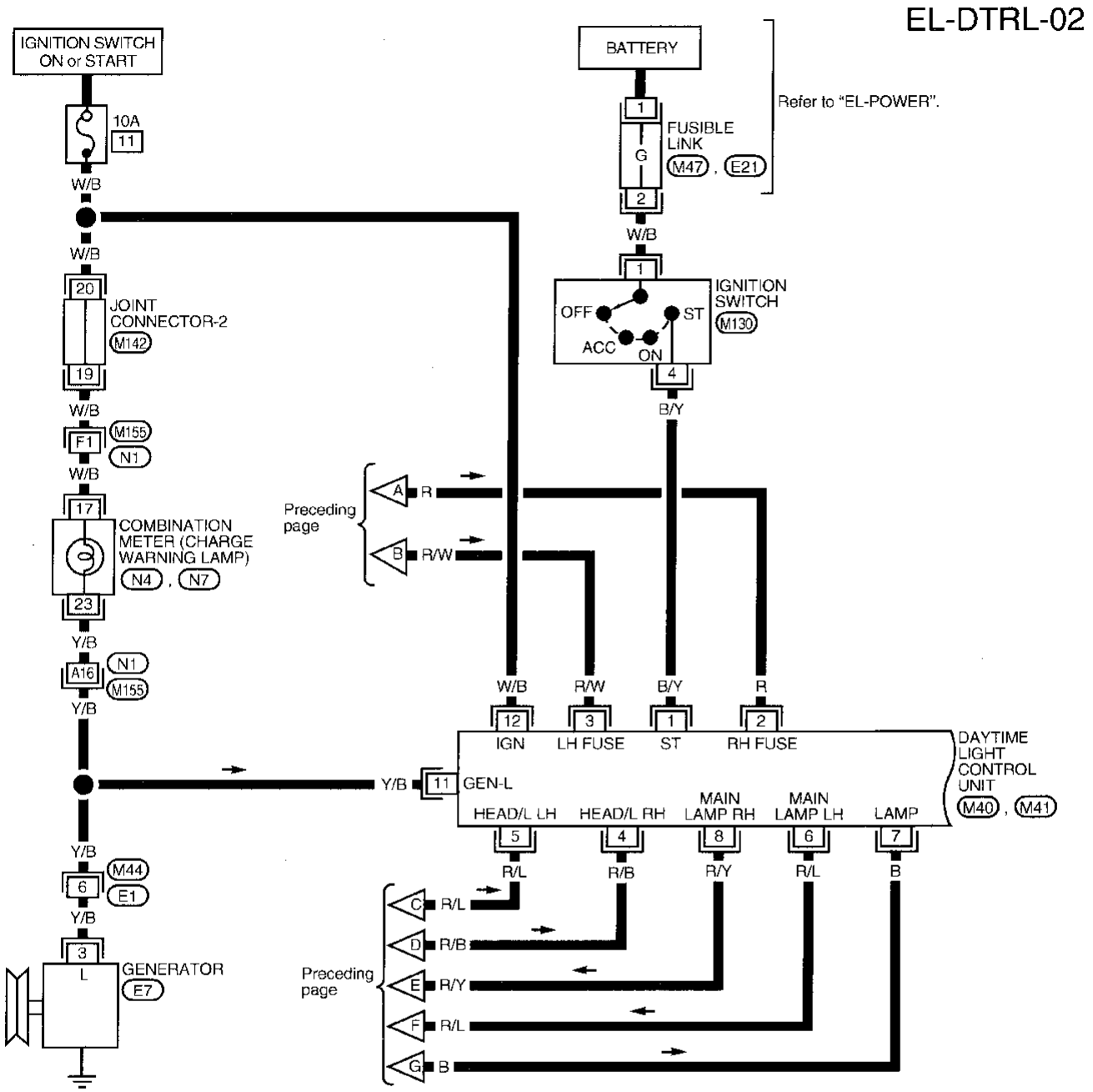

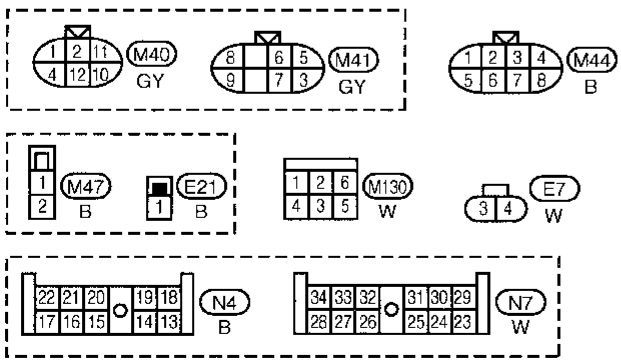

Refer to last page (Foldout page).
M142
M155 , N1

AEL872A

EL-DTRL-03

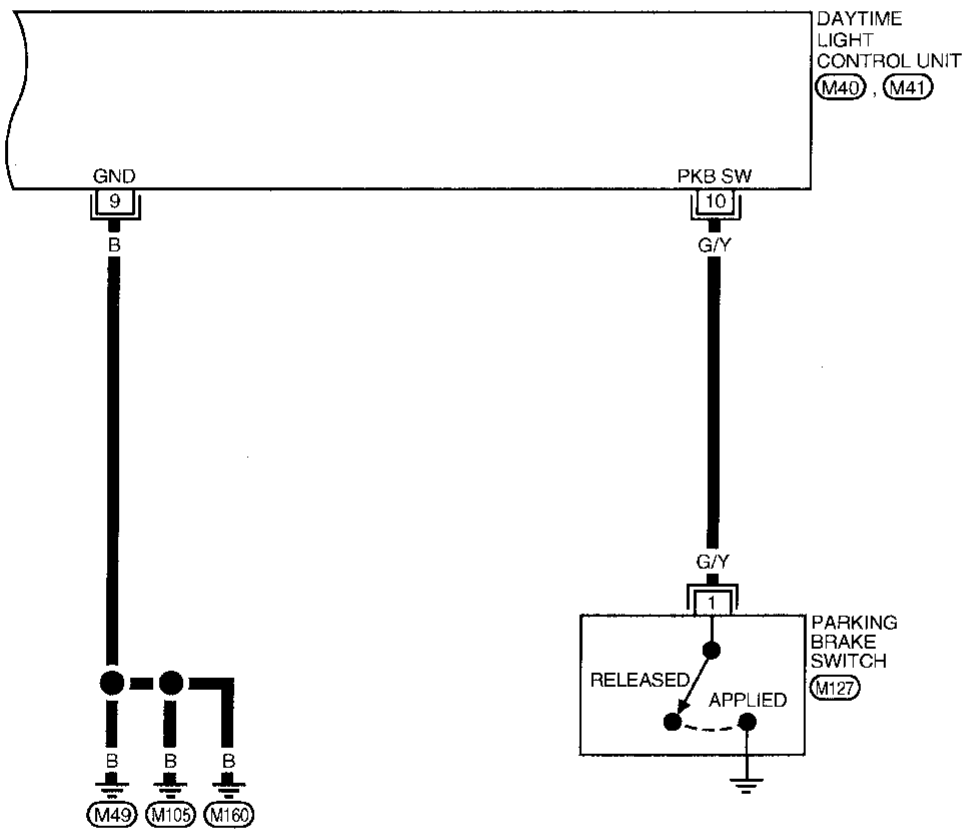

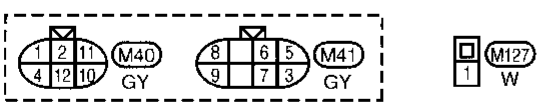

AEL873A

Trouble Diagnoses (For Canada)

DAYTIME LIGHT CONTROL UNIT INSPECTION TABLE

(Data are reference values.)

Terminal No.	Item	Condition		Judgement standard
1	Start signal		When turning ignition switch to ST	Battery positive voltage
			When turning ignition switch to ON from ST	1V or less
			When turning ignition switch to OFF	1V or less
2	Power source		When turning ignition switch to ON	Battery positive voltage
			When turning ignition switch to OFF	Battery positive voltage
3	Power source		When turning ignition switch to ON	Battery positive voltage
			When turning ignition switch to OFF	Battery positive voltage
4	Lighting switch (Low beam)		When turning lighting switch to HEAD (2nd position)	Battery positive voltage
5	Lighting switch (High beam)		When turning lighting switch to HIGH BEAM	Battery positive voltage
			When turning lighting switch to FLASH TO PASS	Battery positive voltage
6	LH high beam		When turning lighting switch to HIGH BEAM	Battery positive voltage
			When releasing parking brake with engine running and turning lighting switch to OFF (daytime light operation) **CAUTION: Block wheels and ensure selector lever is in "N" or "P" position.**	Battery positive voltage
7	LH headlamp control (ground)		When lighting switch is turned to HEAD	1V or less
		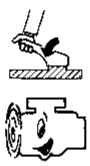	When releasing parking brake with engine running and turning lighting switch to OFF (daytime light operation) **CAUTION: Block wheels and ensure selector lever is in "N" or "P" position.**	Approx. half battery voltage
8	RH high beam		When turning lighting switch to HIGH BEAM	Battery positive voltage
		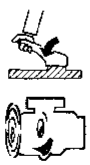	When releasing parking brake with engine running and turning lighting switch to OFF (daytime light operation) **CAUTION: Block wheels and ensure selector lever is in "N" or "P" position.**	Approx. half battery voltage

Trouble Diagnoses (For Canada) (Cont'd)

Terminal No.	Item	Condition		Judgement standard
9	Ground		—	—
10	Parking brake switch		When parking brake is released	Battery positive voltage
			When parking brake is applied	1.5V or less
11	Generator		When turning ignition switch to ON	1V or less
			When engine is running	Battery positive voltage
			When turning ignition switch to OFF	1V or less
12	Power source		When turning ignition switch to ON	Battery positive voltage
			When turning ignition switch to ST	Battery positive voltage
			When turning ignition switch to OFF	1V or less

Bulb Specifications

Item	Wattage (W)	Bulb No.
Conventional bulb	65/55	6052
Halogen bulb	65/35	H6059

Aiming Adjustment

When performing headlamp aiming adjustment, use an aiming machine, aiming wall screen or headlamp tester. Aimers should be in good repair, calibrated and operated according to their operation manuals.

Before performing aiming adjustment, make sure of the following:

CAUTION:

- **Keep all tires inflated to correct pressures.**
- **Place vehicle on level ground.**
- **See that vehicle is unloaded (except for full levels of coolant, engine oil and fuel, and spare tire, jack, and tools). Have the driver or equivalent weight placed in driver's seat.**

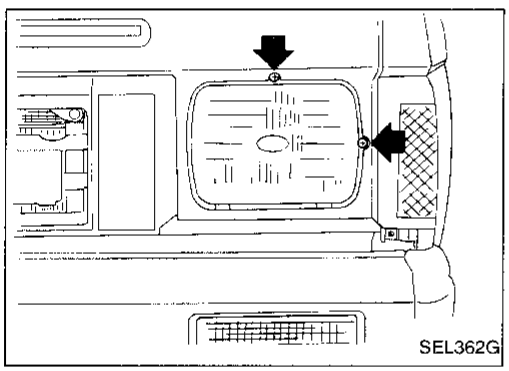

LOW BEAM

1. Turn headlamp low beam ON.
2. Use adjusting screws to perform aiming adjustment.

- **First tighten the adjusting screw all the way and then make adjustment by loosening the screw.**

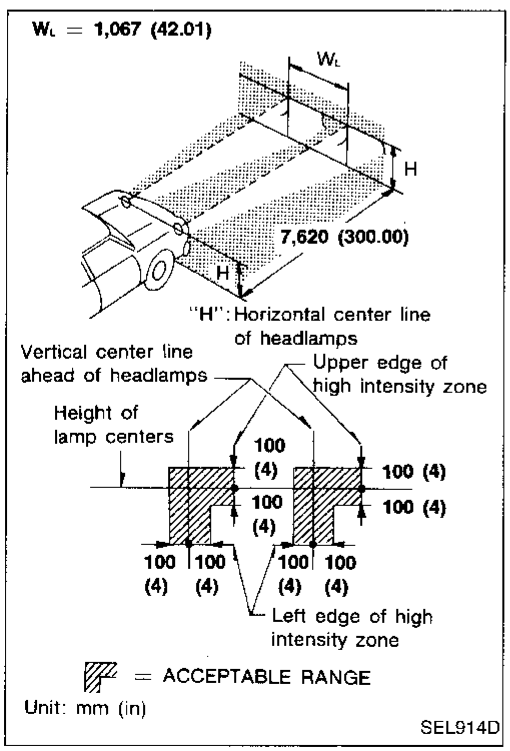

- **Adjust headlamps so that upper edge and left edge of high intensity zone are within the acceptable range as shown at left.**
- **Dotted lines in illustration shown center of headlamp.**

"H": Horizontal center line of headlamps.

"W_L": Distance between each headlamp center.

Aiming Adjustment (Cont'd)

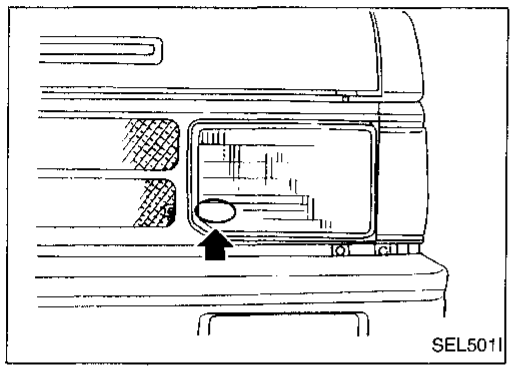

AIMER ADJUSTMENT MARK

When using a mechanical aimer, adjust adapter legs to the data marked on the headlamps.

Example:

4H 2V

Vertical side: 2

Horizontal side 4

Back-up Lamp/Wiring Diagram –BACK/L–

EL-BACK/L-01

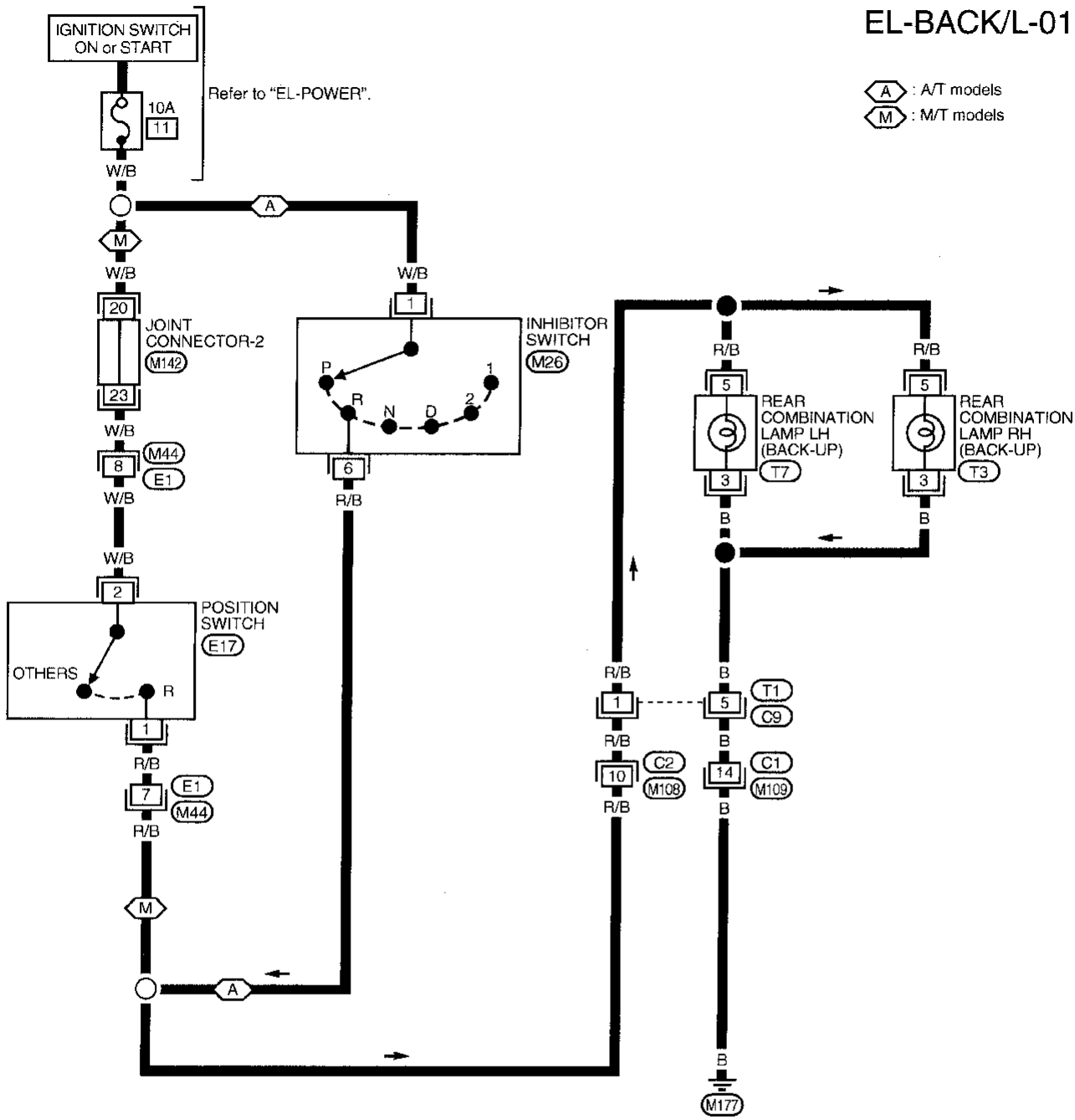

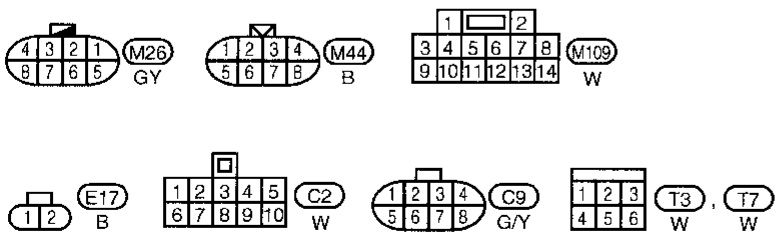

Refer to last page (Foldout page).
M142

AEL908A

Parking, License, Tail and Stop Lamps/Wiring Diagram –TAIL/L–

EL-TAIL/L-01

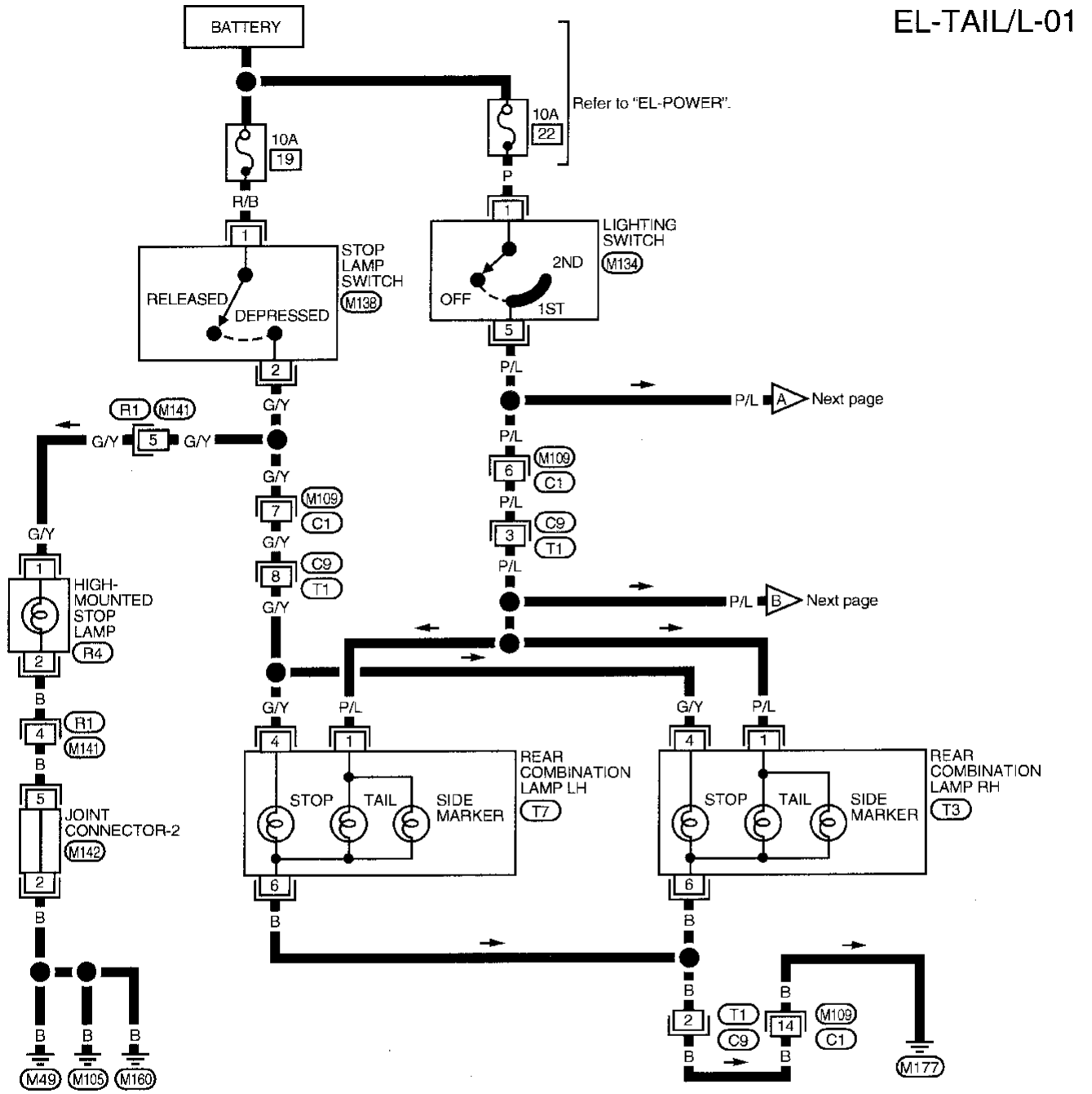

Refer to last page (Foldout page).
M142

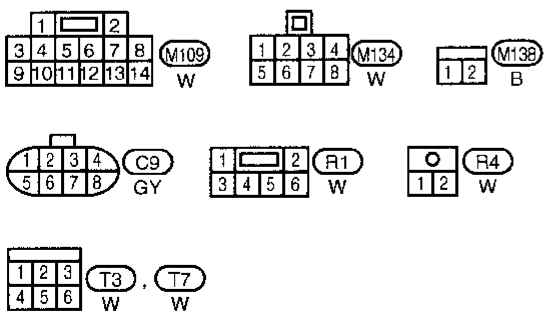

AEL909A

Parking, License, Tail and Stop Lamps/Wiring Diagram –TAIL/L– (Cont'd)

EL-TAIL/L-02

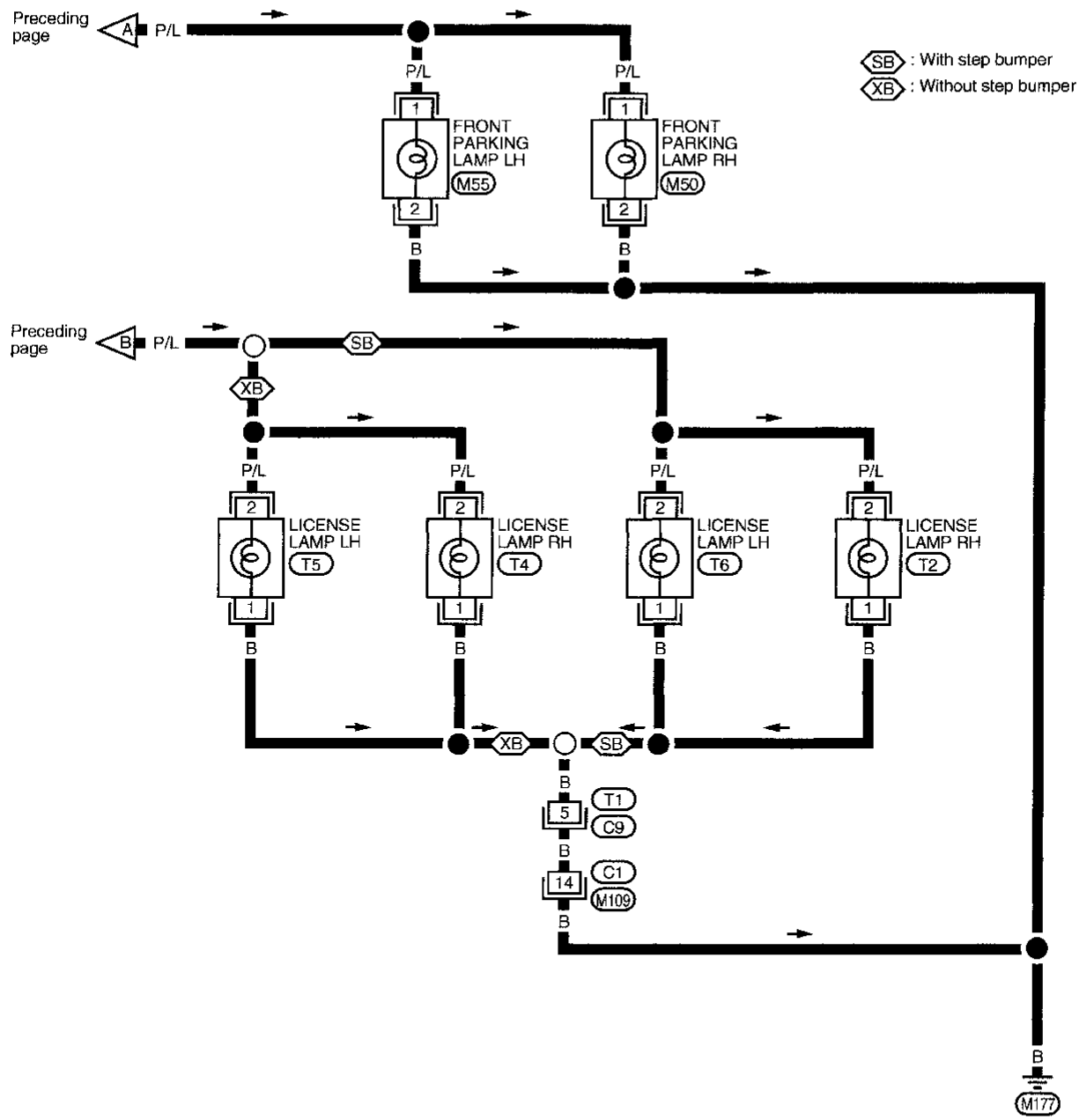

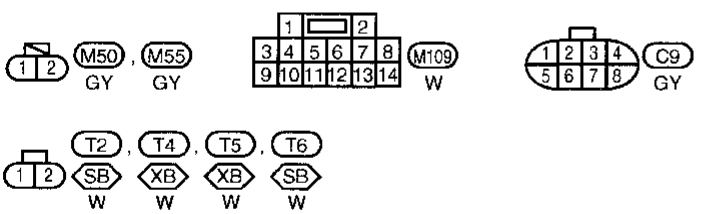

AEL874A

Turn Signal and Hazard Warning Lamps/System Description

TURN SIGNAL OPERATION

With the hazard switch in the OFF position and the ignition switch in the ON or START position, power is supplied:
- through 10A fuse (No. 10 , located in the fuse block)
- to hazard switch terminal ⑧
- through terminal ⑦ of the hazard switch
- to combination flasher unit terminal ①
- through terminal ③ of the combination flasher unit
- to turn signal switch terminal ⑤.

Ground is supplied to combination flasher unit terminal ② through body grounds M49 , M105 and M160 .

LH turn

With the turn signal switch in the LH position, power is supplied from turn signal switch terminal ③ to:
- front turn signal lamp LH terminal ②
- rear combination lamp LH terminal ②, and
- combination meter terminal ⑨.

Ground is supplied:
- to front turn signal lamp LH terminal ①, and
- to combination meter terminal ㊷
- through body grounds M49 , M105 and M160 .

Ground is supplied to rear combination lamp LH terminal ⑥ through body ground M177 .
With power and ground supplied, the combination flasher unit controls the flashing of the LH turn signal lamps.

RH turn

With the turn signal switch in the RH position, power is supplied from turn signal switch terminal ⑥ to:
- front turn signal lamp RH terminal ②
- rear combination lamp RH terminal ②, and
- combination meter terminal ㉟.

Ground is supplied:
- to front turn signal lamp RH terminal ①, and
- to combination meter terminal ㊷
- through body grounds M49 , M105 and M160 .

Ground is supplied to rear combination lamp LH terminal ⑥ through body ground M177 .
With power and ground supplied, the combination flasher unit controls the flashing of the RH turn signal lamps.

HAZARD LAMP OPERATION

Power is supplied at all times to hazard switch terminal ② through:
- 10A fuse (No. 18 , located in the fuse block).

With the hazard switch in the ON position, power is supplied:
- through terminal ⑦ of the hazard switch
- to combination flasher unit terminal ①
- through terminal ③ of the combination flasher unit
- to hazard switch terminal ①.

Ground is supplied to combination flasher unit terminal ② through body grounds M49 , M105 and M160 .
Power is supplied through terminal ③ of the hazard switch to
- front turn signal lamp LH terminal ②
- rear combination lamp LH terminal ②, and
- combination meter terminal ⑨.

Power is supplied through terminal ④ of the hazard switch to
- front turn signal lamp RH terminal ②
- rear combination lamp RH terminal ②, and
- combination meter terminal ㉟.

Ground is supplied:
- to terminal ① of the front turn signal lamps, and
- to combination meter terminal ㊷
- through body grounds M49 , M105 and M160 .

Ground is supplied to rear combination lamps terminal ⑥ through body ground M177 .
With power and ground supplied, the combination flasher unit controls the flashing of the hazard warning lamps.

NOTES

Turn Signal and Hazard Warning Lamps/Wiring Diagram –TURN–

EL-TURN-01

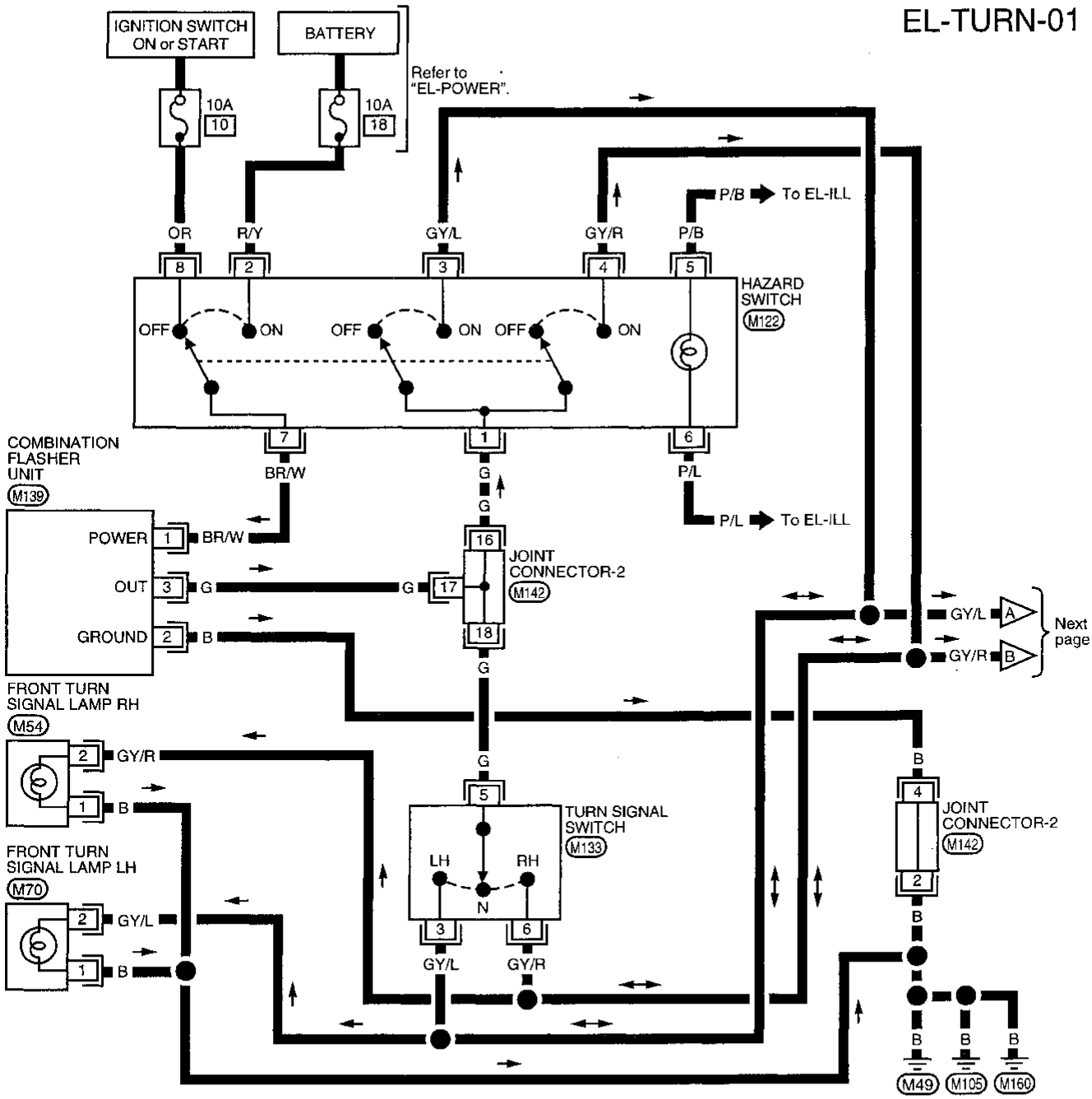

Refer to last page (Foldout page). M142

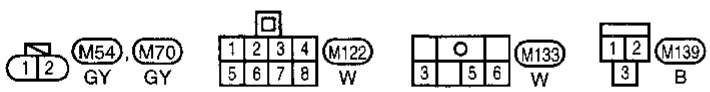

AEL282A-A

Turn Signal and Hazard Warning Lamps/Wiring Diagram –TURN– (Cont'd)

EL-TURN-02

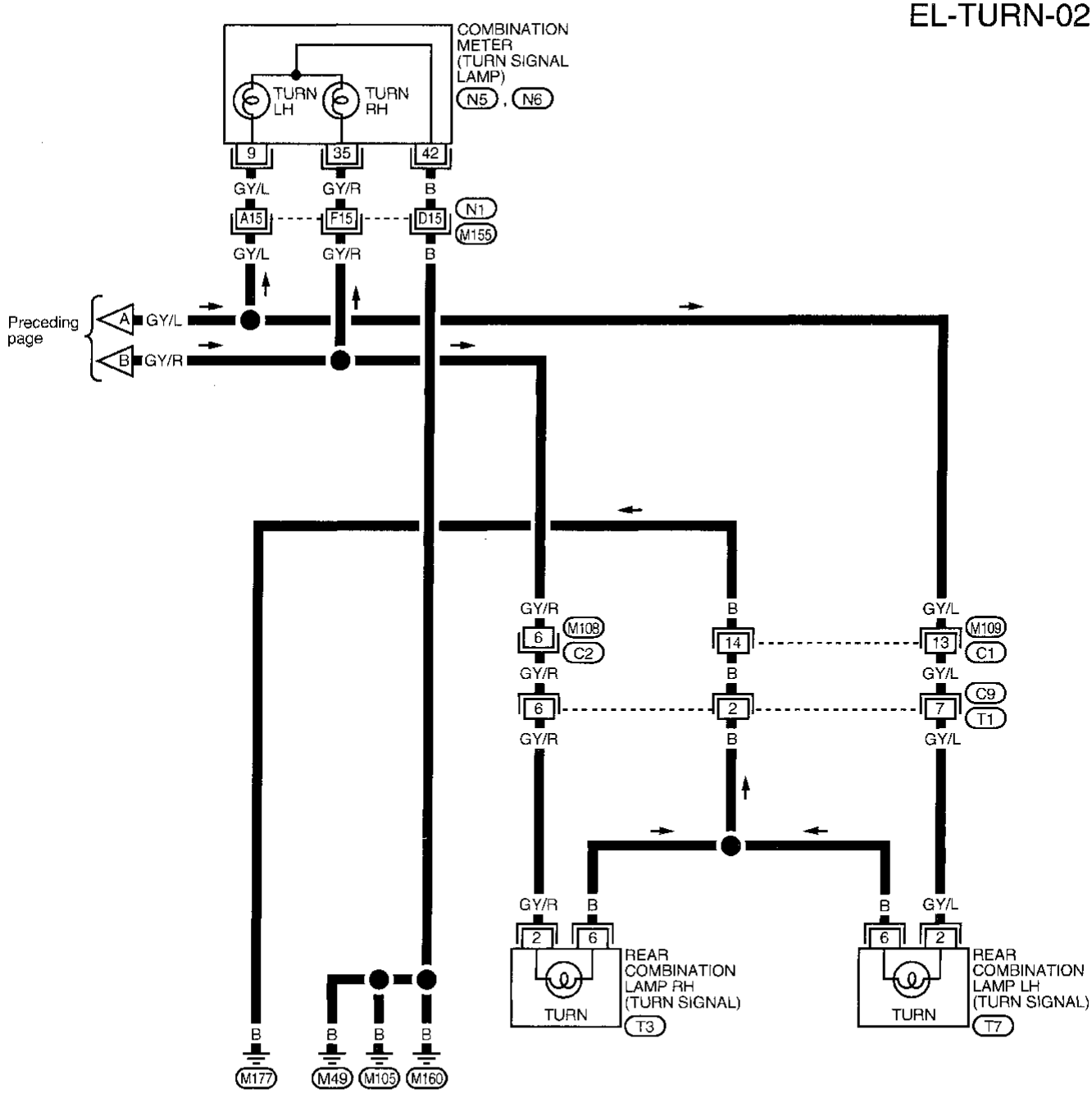

Refer to last page (Foldout page).
M155 , N1

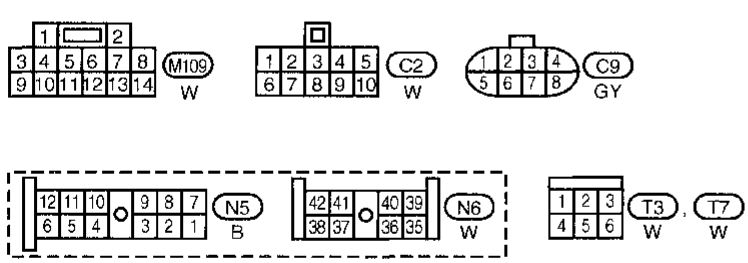

AEL910A

Turn Signal and Hazard Warning Lamps/Trouble Diagnoses

Symptom	Possible cause	Repair order
Turn signal and hazard warning lamps do not operate.	1. Hazard switch 2. Combination flasher unit 3. Open in combination flasher unit circuit	1. Check hazard switch. 2. Refer to combination flasher unit check. 3. Check wiring to combination flasher unit for open circuit.
Turn signal lamps do not operate but hazard warning lamps operate.	1. 10A fuse 2. Hazard switch 3. Turn signal switch 4. Open in turn signal switch circuit	1. Check 10A fuse (No. 10 , located in fuse block). Turn ignition switch ON and verify battery positive voltage is present at terminal 8 of hazard switch. 2. Check hazard switch. 3. Check turn signal switch. 4. Check G wire between combination flasher unit and turn signal switch for open circuit.
Hazard warning lamps do not operate but turn signal lamps operate.	1. 10A fuse 2. Hazard switch 3. Open in hazard switch circuit	1. Check 10A fuse (No. 18 , located in fuse block). Verify battery positive voltage is present at terminal 2 of hazard switch. 2. Check hazard switch. 3. Check G wire between combination flasher unit and hazard switch for open circuit.
Front turn signal lamp LH or RH does not operate.	1. Bulb 2. Grounds M49 , M105 and M160	1. Check bulb. 2. Check grounds M49 , M105 and M160 .
Rear turn signal lamp LH or RH does not operate.	1. Bulb 2. Ground M177	1. Check bulb. 2. Check grounds M177 .
LH and RH turn indicators do not operate.	1. Grounds M49 , M105 and M160	1. Check grounds M49 , M105 and M160 .
LH or RH turn indicator does not operate.	1. Bulb	1. Check bulb in combination meter.

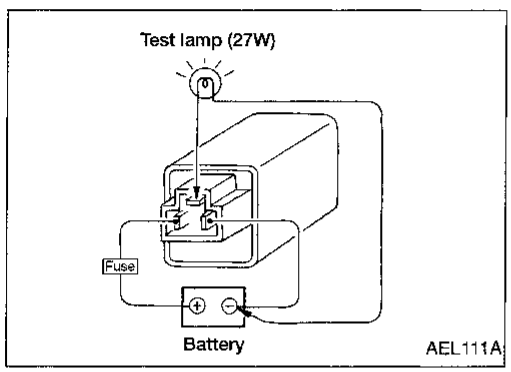

Combination Flasher Unit Check

- Before checking, ensure that bulbs meet specifications.
- Connect a battery and test lamp to the combination flasher unit, as shown. Combination flasher unit is properly functioning if it blinks when power is supplied to the circuit.

Bulb Specifications

HEADLAMPS

Item	Wattage (W)	Bulb No.
Conventional bulb	65/55	6052
Halogen bulb	65/35	H6059

OTHER LAMPS

Item	Wattage (W)	Bulb No.
Front turn signal lamp	27	1156
Front parking lamp	3.8	194
Rear combination lamp		
Turn signal	27	1156
Stop/Tail	27/8	1157
Back-up	27	1156
Rear side marker	3.4	194
License plate lamp	3.8 or 5	168 (For 3.8W lamp)
High-mounted stop lamp	2.3	2723

Illumination/System Description

Power is supplied at all times:

- through 10A fuse (No. 22 , located in the fuse block)
- to lighting switch terminal ①.

The lighting switch must be in the 1ST or 2ND position for illumination.
The illumination control switch is a thumbwheel that controls the amount of current to the illumination system. As the amount of current increases, the illumination becomes brighter.
The glove box lamp is not controlled by the illumination control switch. The intensity of this lamp does not change.
The clock display (if equipped) will dim when the lighting switch is turned to the 1ST or 2ND position.
The following chart shows the power and ground connector terminals for the components included in the illumination system.

Component	Power terminal	Ground terminal
Illumination control switch	⑤	②
Glove box lamp	①	②
Clock*	㉚	⑤
Combination meter	㊵	⑤
ASCD main switch*	④	⑤
Hazard switch	⑥	⑤
A/T device indicator*	③	④
Heater	②	①
Radio	⑧	⑦

* If equipped.

With the exception of the glove box lamp, the ground for all of the components is controlled through terminals ③ and ⑥ of the illumination control switch and body grounds (M49) , (M105) and (M160) .
When the glove box is open, glove box lamp terminal ② is grounded through glove box lamp switch and body grounds (M49) , (M105) and (M160) .

Illumination/Schematic

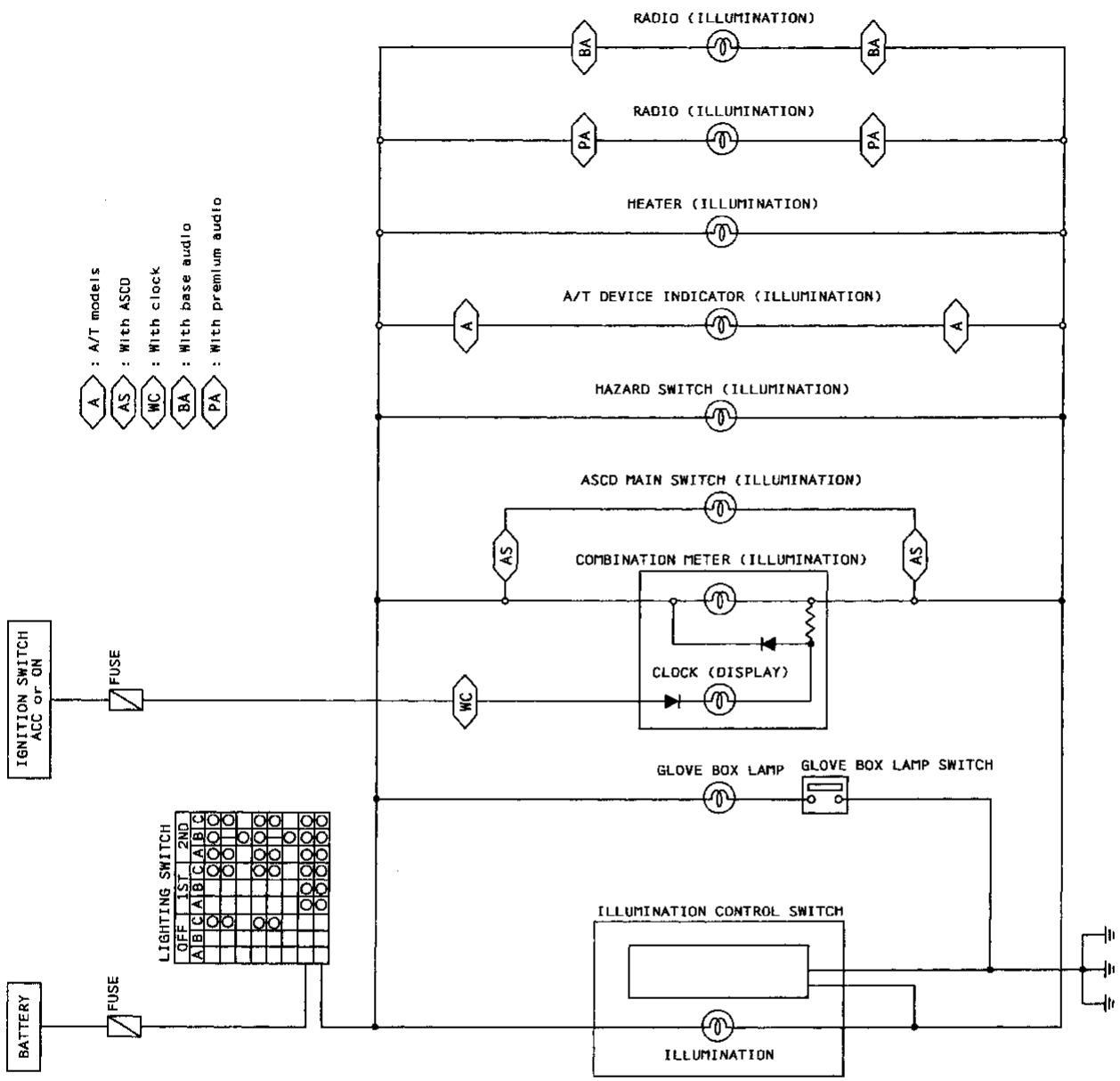

AEL297A

Illumination/Wiring Diagram –ILL–

EL-ILL-01

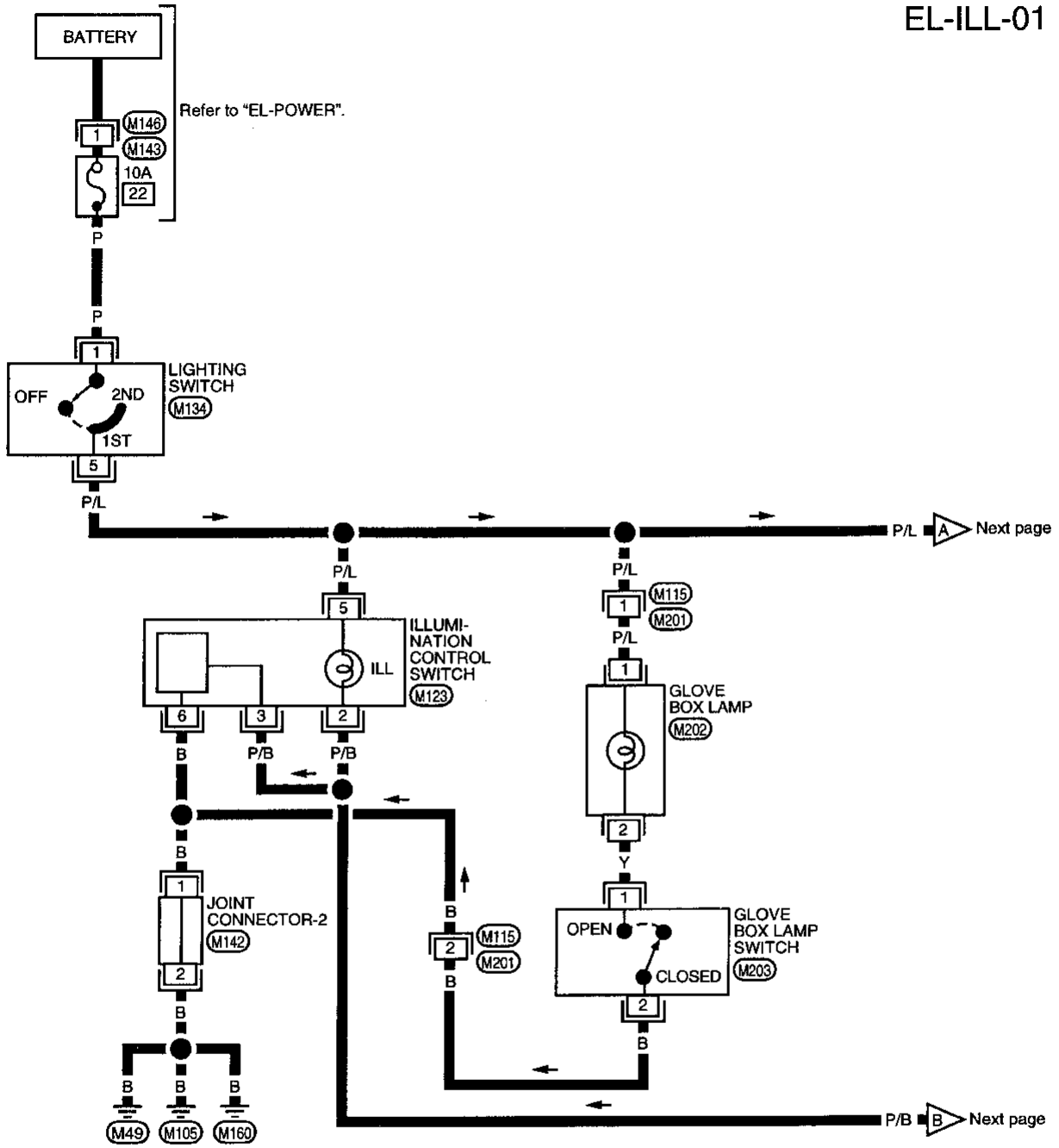

Refer to last page (Foldout page).
M142

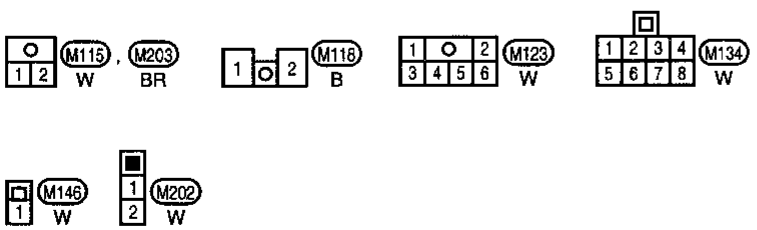

AEL298A-A

Illumination/Wiring Diagram –ILL– (Cont'd)

EL-ILL-02

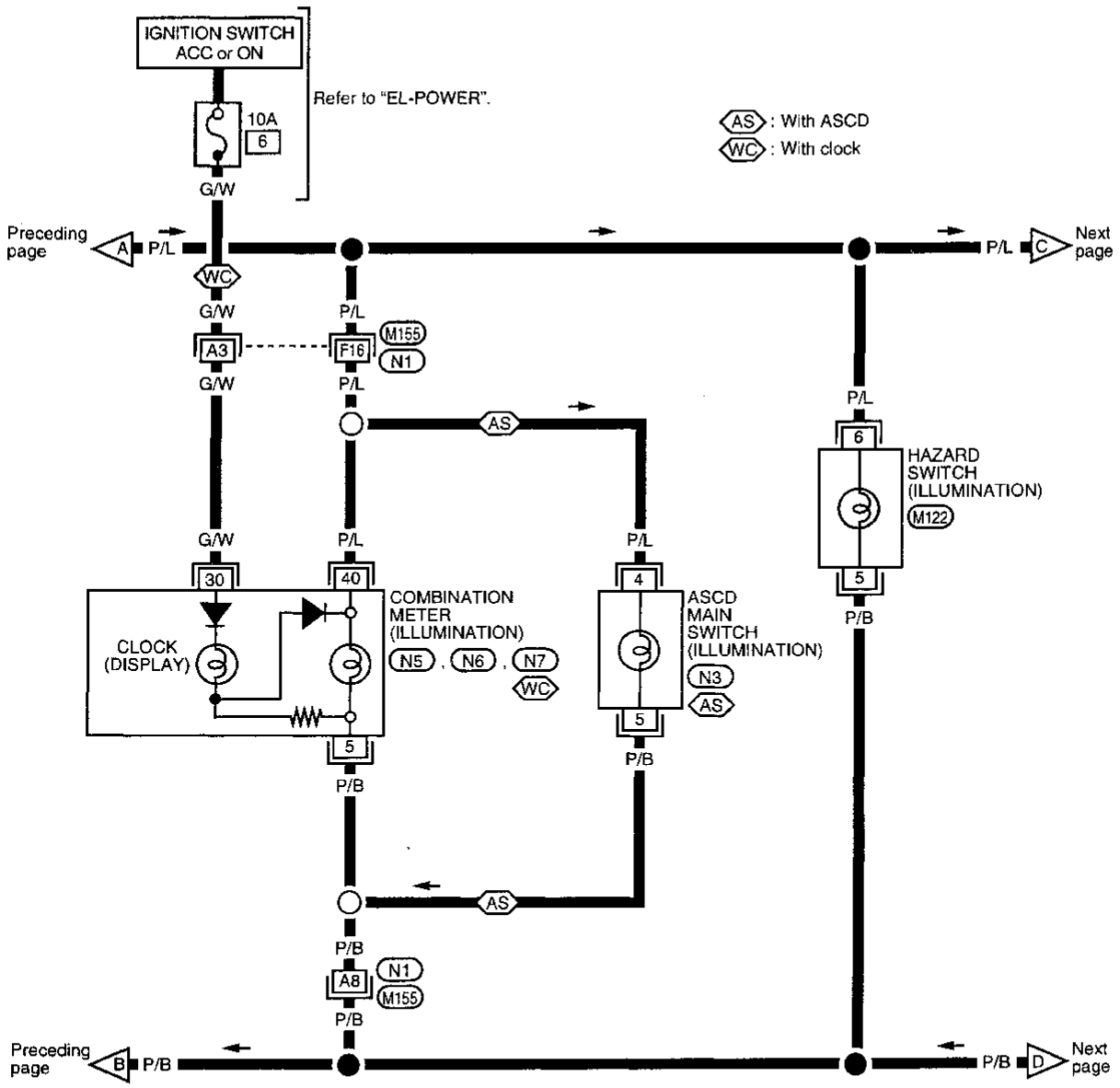

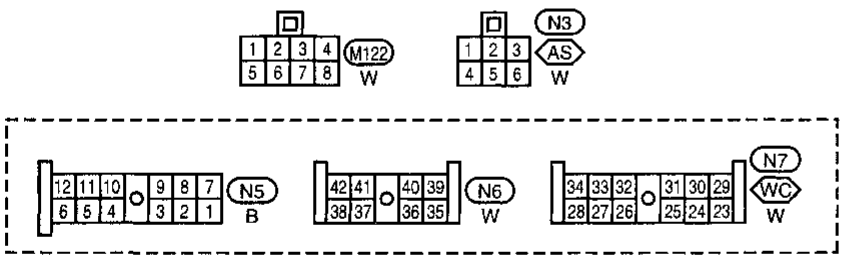

Refer to last page (Foldout page).
M155 , N1

AEL298A-B

EL-ILL-03

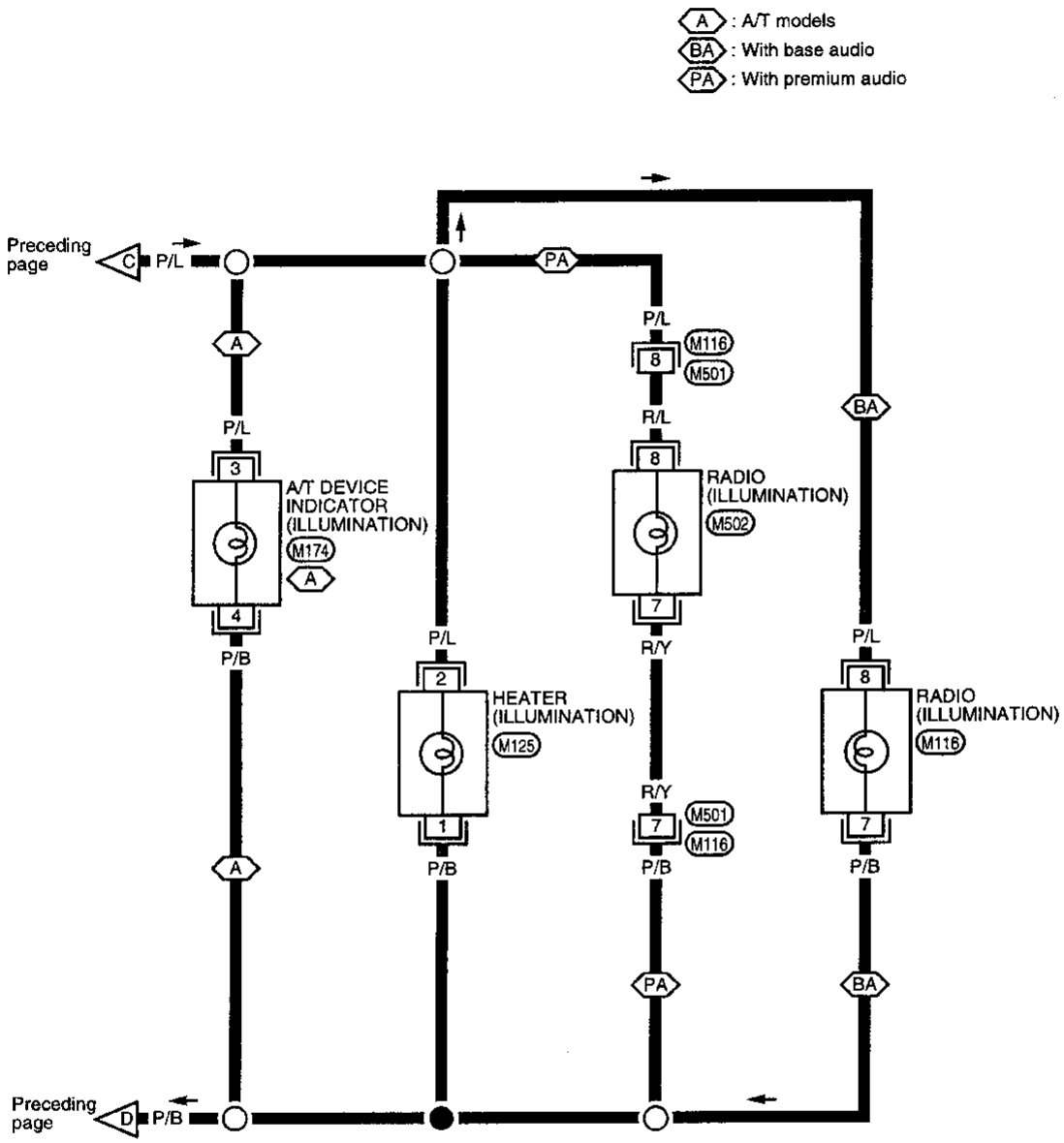

AEL298A-C

Interior and Map Lamps/ Wiring Diagram –INT/L–

EL-INT/L-01

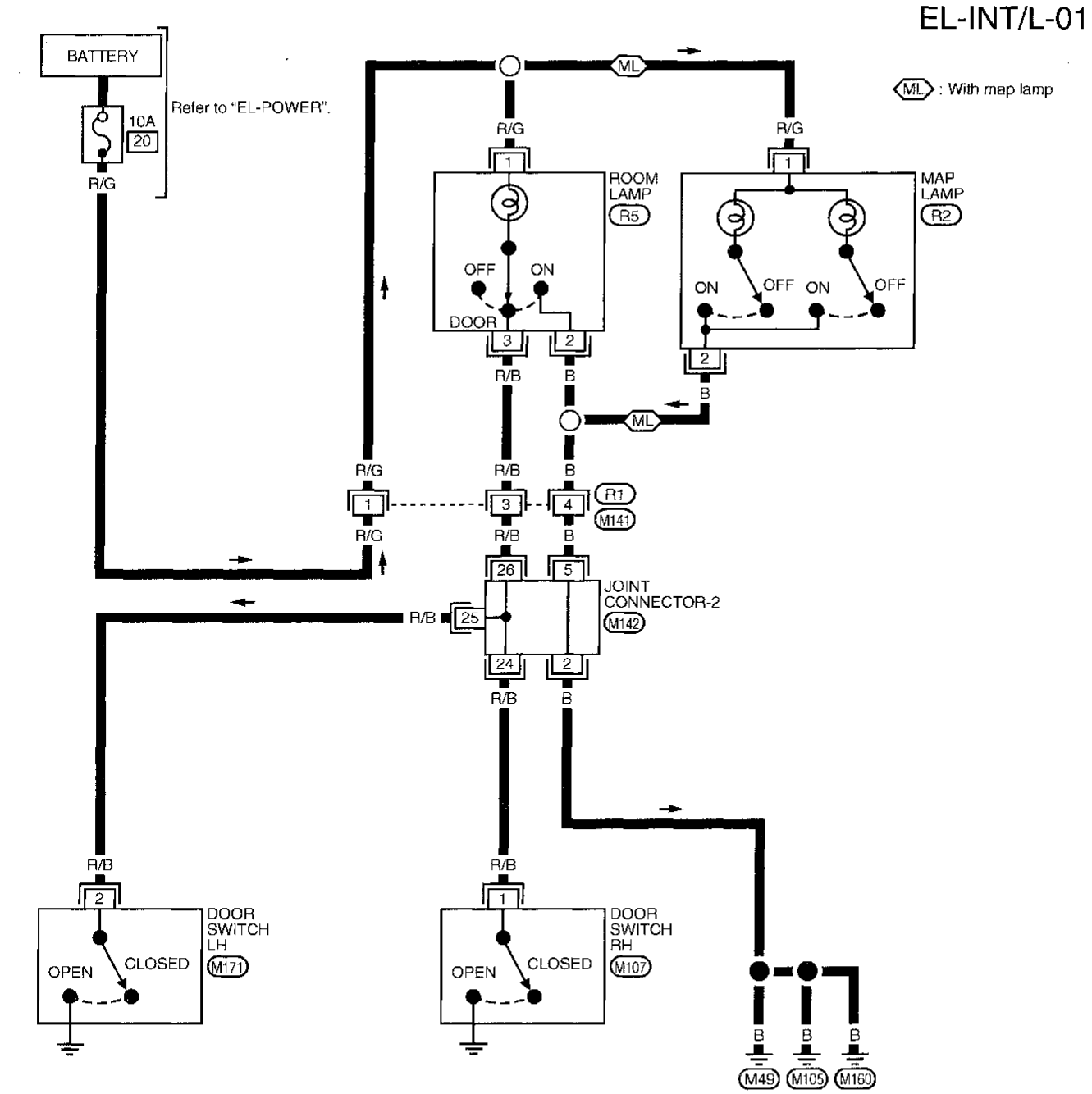

Refer to last page (Foldout page).
M142

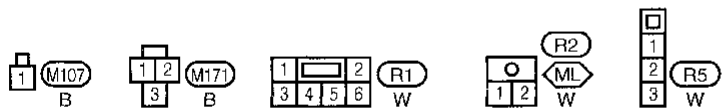

AEL875A

Bulb Specifications

Item	Wattage (W)	Bulb No.
Interior lamp	10	—
Map lamp	8	—

System Description

With the ignition switch in the ON or START position, power is supplied:
- through 10A fuse (No. 11 , located in the fuse block)
- to combination meter terminal ⑰ for the water temperature gauge, fuel gauge, speedometer and tachometer (if equipped).

Ground is supplied:
- to combination meter terminal ㉑ [and terminal ㊷ (with tachometer)]
- through body grounds M49 , M105 and M160 .

WATER TEMPERATURE GAUGE

The water temperature gauge indicates the engine coolant temperature. The reading on the gauge is based on the resistance of the thermal transmitter.
As the temperature of the coolant increases, the resistance of the thermal transmitter decreases. A variable ground is supplied to terminal ㉛ (without tachometer) or ③ (with tachometer) of the combination meter for the water temperature gauge. The needle on the gauge moves from "C" to "H".

TACHOMETER

The tachometer indicates engine speed in revolutions per minute (rpm).
The tachometer is regulated by a signal:
- from terminal ③ of the ECM (ECCS control module)
- to combination meter terminal ㉝ for the tachometer.

FUEL GAUGE

The fuel gauge indicates the approximate fuel level in the fuel tank.
The fuel gauge is regulated by a variable ground signal supplied:
- to combination meter terminal ⑧ for the fuel gauge
- from terminal ① of the fuel tank gauge unit
- through terminal ④ of the fuel tank gauge unit and
- through ECM (ECCS control module) terminal ㊿.

SPEEDOMETER

The vehicle speed sensor provides a voltage signal to the combination meter for the speedometer.
The voltage is supplied:
- to combination meter terminals ㉒ and ㉘ for the speedometer
- from terminals ① and ② of the vehicle speed sensor.

The speedometer converts the voltage into the vehicle speed displayed.

Combination Meter

WITH TACHOMETER

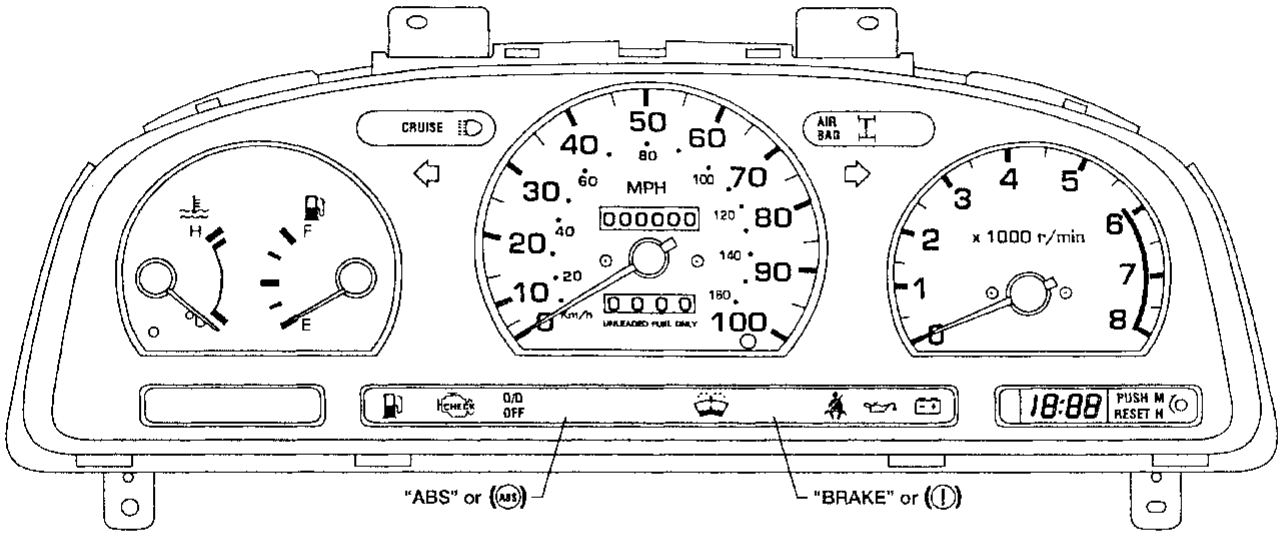

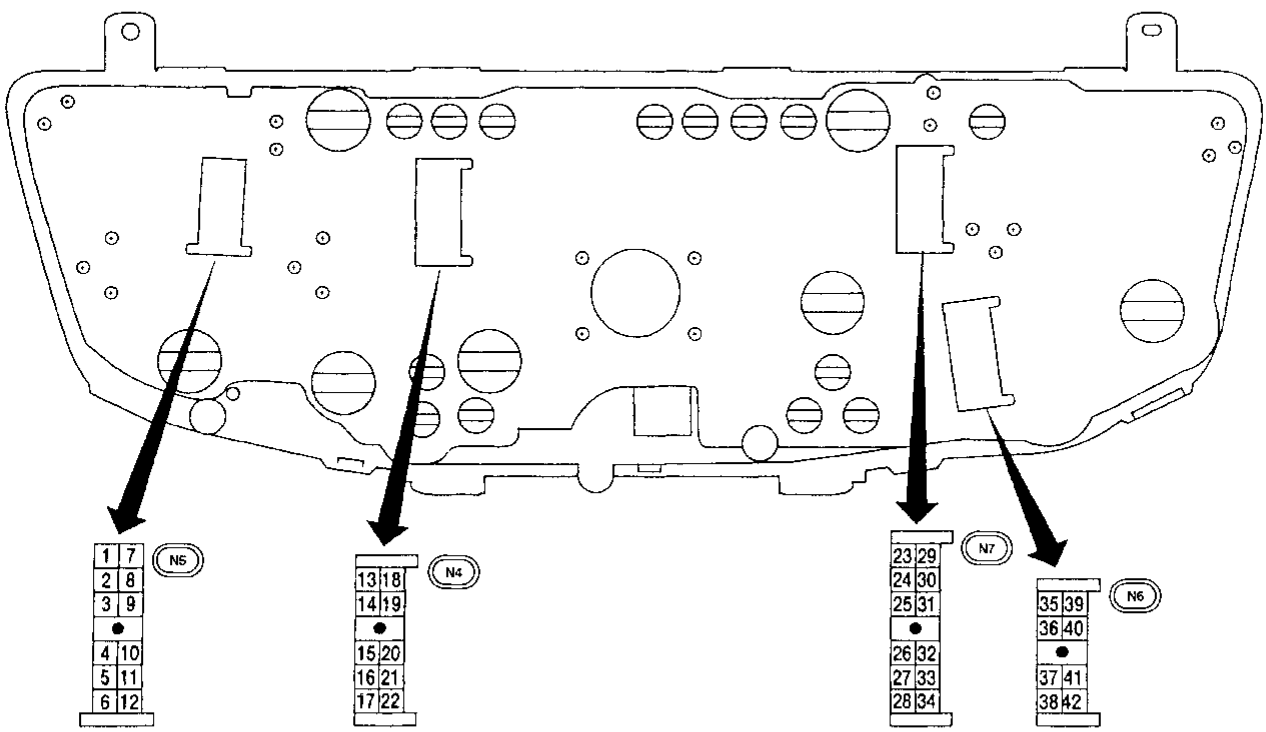

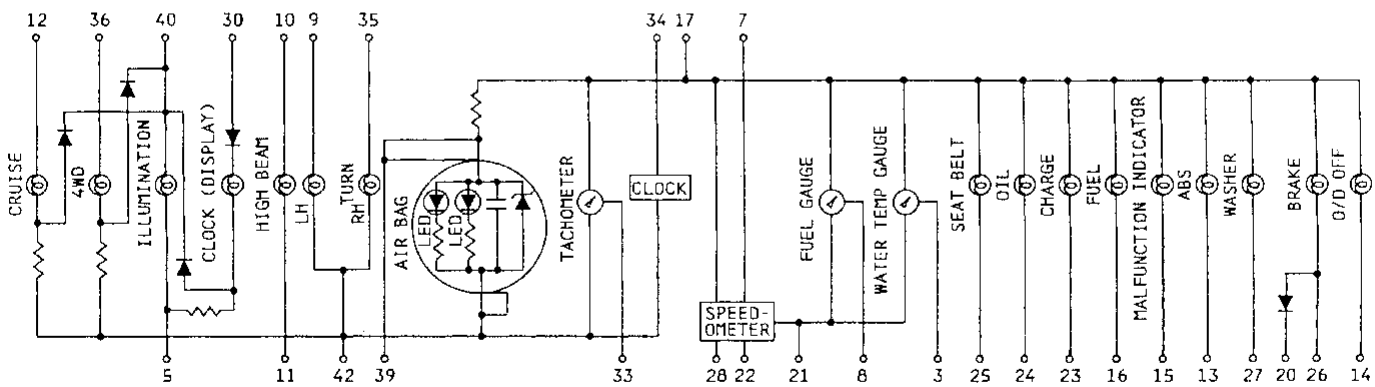

AEL897A

Combination Meter (Cont'd)

WITHOUT TACHOMETER

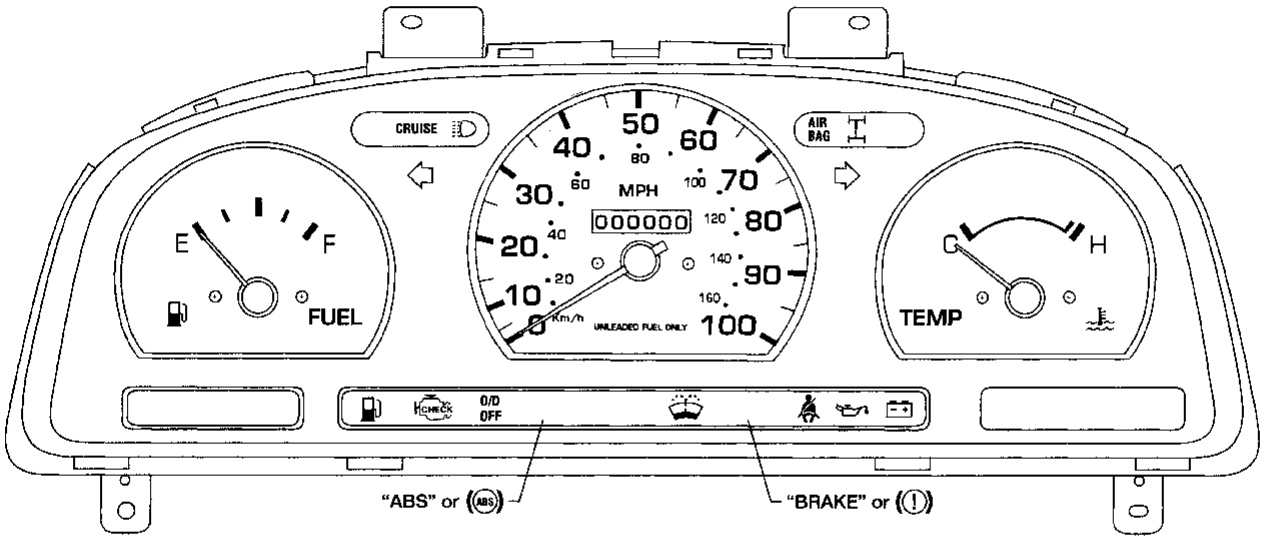

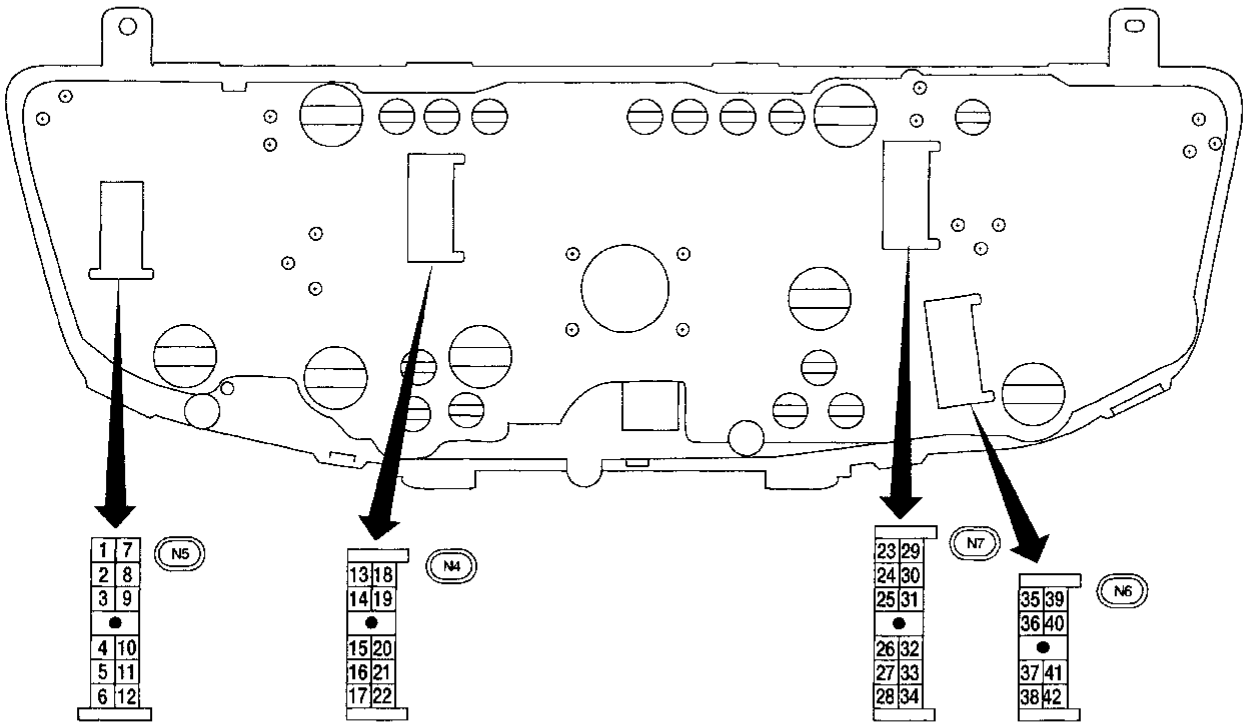

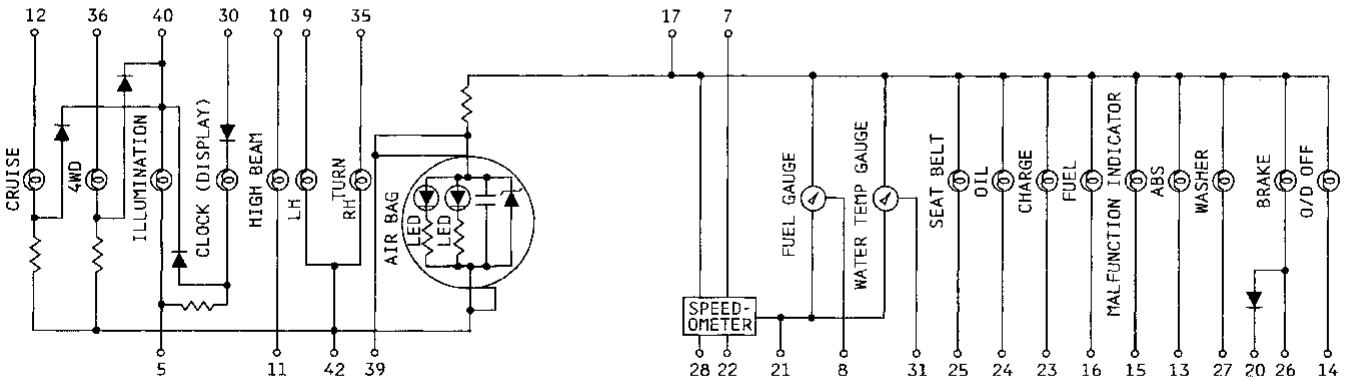

AEL898A

Speedometer, Tachometer, Temp. and Fuel Gauges/Wiring Diagram –METER–

EL-METER-01

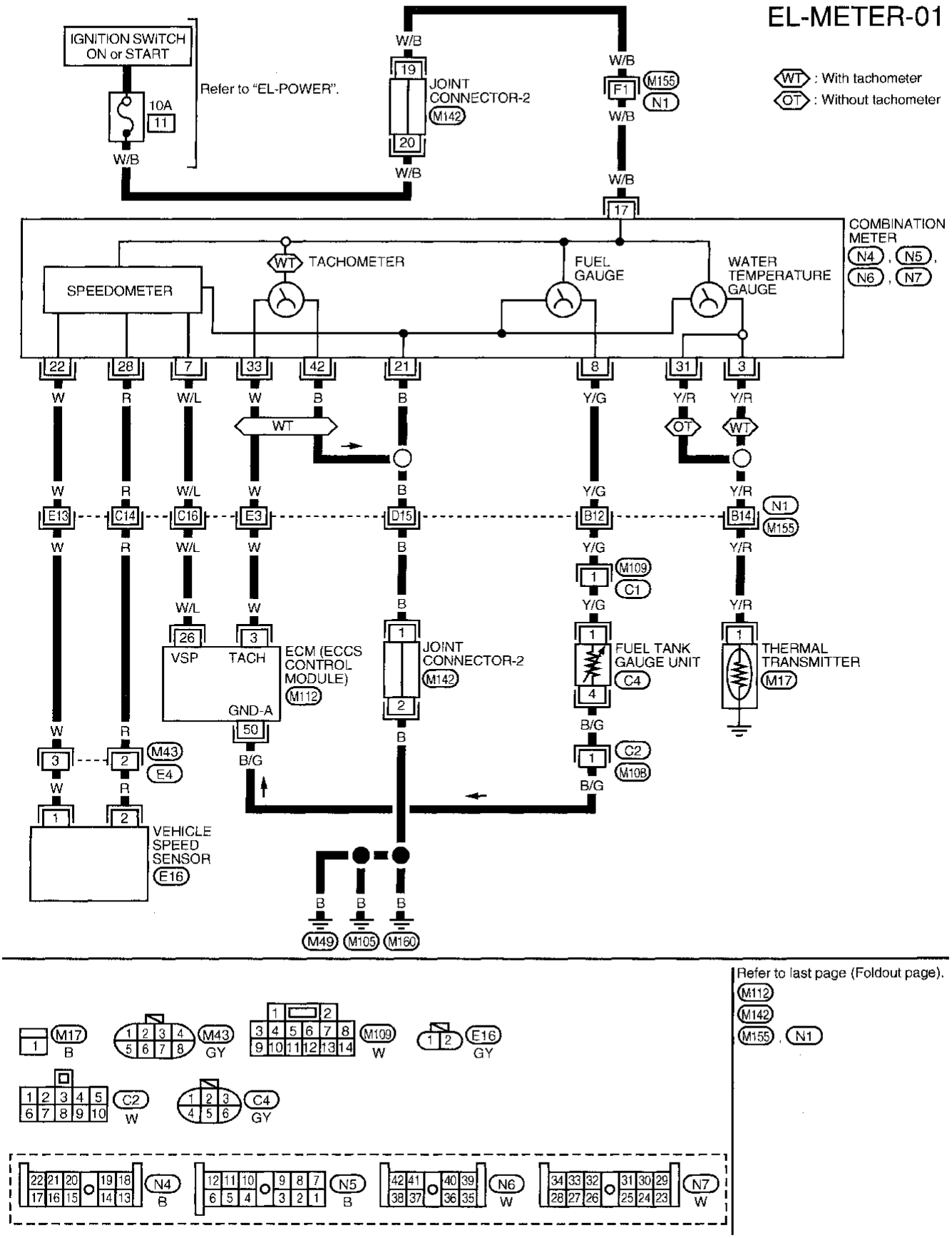

Refer to last page (Foldout page).
M112
M142
M155, N1

AEL876A

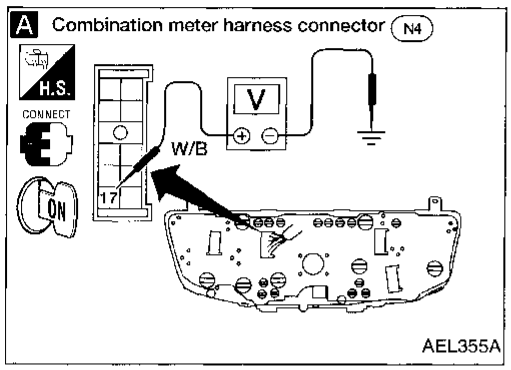

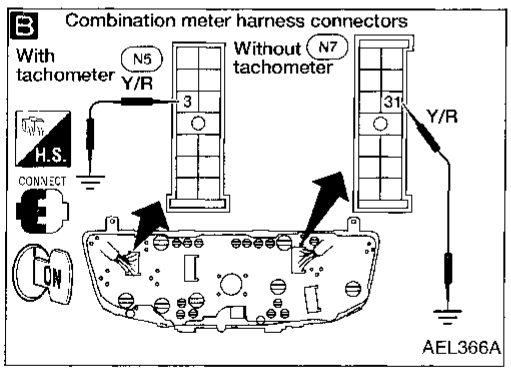

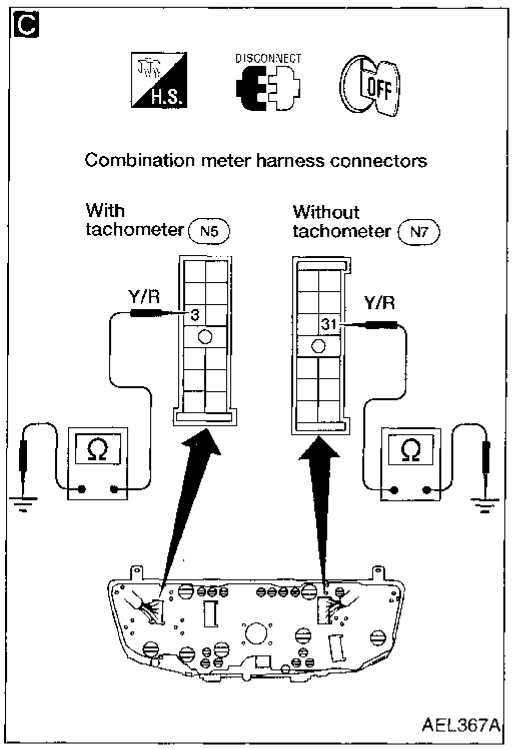

Inspection/Water Temperature Gauge

INSPECTION START

A

CHECK POWER SOURCE.
1. Turn ignition switch ON.
2. Check voltage between terminal 17 and ground.
Battery positive voltage should exist.

NG → Check the following items:
- Harness continuity between battery terminal and combination meter
- Ignition relay-1
- Fusible link and fuse
- Ignition switch

OK ↓

B

CHECK GAUGE OPERATION.
1. Turn ignition switch ON.
2. Connect terminal 3 (with tachometer) or 31 (without tachometer) to ground with wire for **less than 1 second.**
3. Check operation of gauge.
Gauge should move smoothly to full scale.

NG → Repair or replace gauge.

OK ↓

CHECK THERMAL TRANSMITTER.
Perform "Thermal Transmitter Check".
Refer to EL-74.

NG → Repair or replace.

OK ↓

C

CHECK HARNESS CONTINUITY.
Check harness continuity between terminal 3 (with tachometer) or 31 (without tachometer) and ground.
Continuity should exist.
If OK, check harness for short.

NG → Repair or replace.

OK ↓

Reinstall any part removed.

↓

INSPECTION END

Inspection/Fuel Gauge

	INCIDENT	Flow chart No.
1	Fuel gauge always reads empty	1
2	Fuel gauge reads inaccurately	2
3	Fuel gauge always reads full	3

INSPECTION START

A 1

CHECK POWER SOURCE.
1. Turn ignition switch ON.
2. Check voltage between terminal ⑰ and ground.
Battery positive voltage should exist.

NG → Check the following items:
- Harness continuity between battery terminal and combination meter
- Ignition relay-1
- Fusible link and fuse
- Ignition switch

OK

B 2 3

CHECK GAUGE OPERATION.
1. Turn ignition switch ON.
2. Connect terminal ⑧ to ground with wire for **approx. 90 seconds.**
3. Check operation of gauge.
Gauge should move smoothly to full scale.

NG → Repair or replace gauge.

OK

CHECK FUEL TANK GAUGE UNIT.
Perform "Fuel Tank Gauge Unit Check".
Refer to EL-74.

NG → Repair or replace.
Refer to FE section ("Fuel Pump and Gauge", "FUEL SYSTEM").

OK

C

CHECK HARNESS CONTINUITY.
Check harness continuity between terminal ⑧ and ground.
Continuity should exist.
If OK, check harness for short.

NG → Repair or replace.

OK

Reinstall any part removed.

INSPECTION END

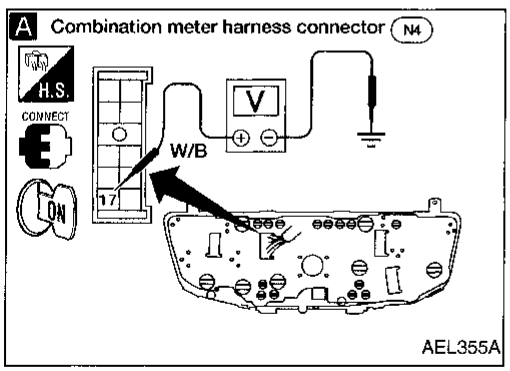

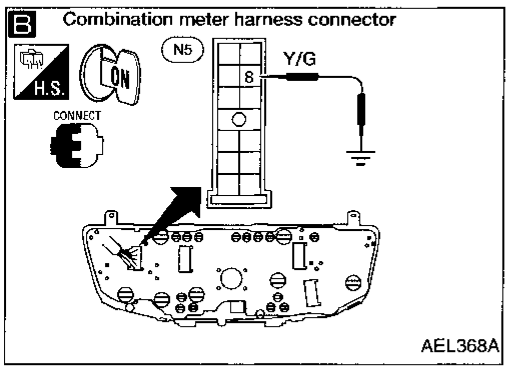

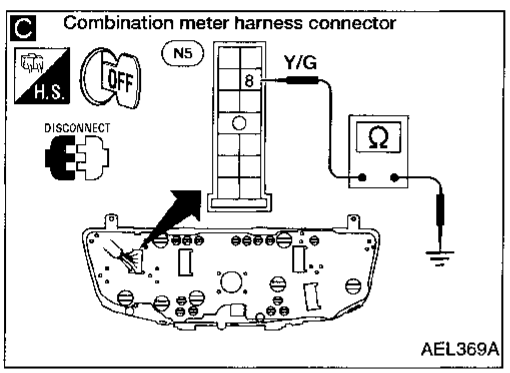

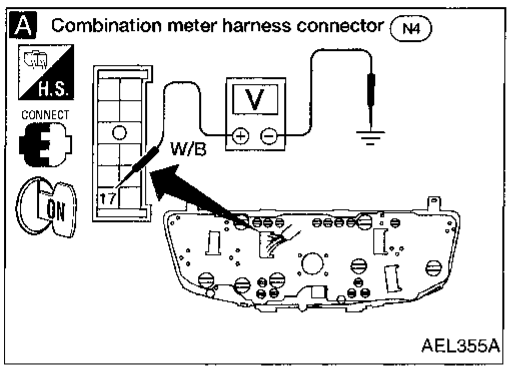

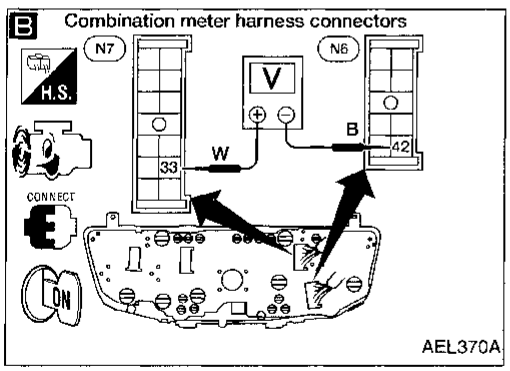

Inspection/Tachometer

INSPECTION START

A

CHECK POWER SOURCE.
1. Turn ignition switch ON.
2. Check voltage between terminal (17) and ground.
   Battery voltage should exist.

NG → Check the following items:
- Harness continuity between battery terminal and combination meter
- Ignition relay-1
- Fusible link and fuse
- Ignition switch

OK ↓

B

CHECK ECM OUTPUT.
1. Start engine.
2. Check voltage between terminals (33) and (42) at idle and 2,000 rpm.
   Higher rpm = Higher voltage
   Lower rpm = Lower voltage
   Voltage should change with rpm.

NG → Check harness and connector between ECM and combination meter, or check ground.

OK ↓

Replace tachometer.

↓

INSPECTION END

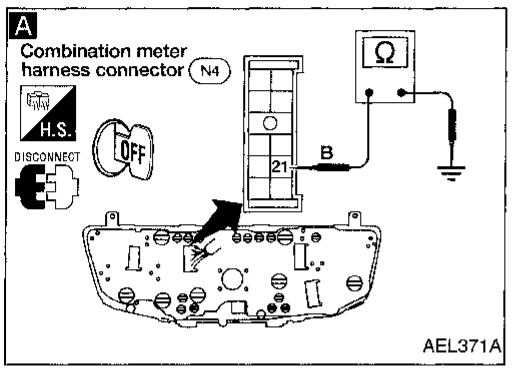

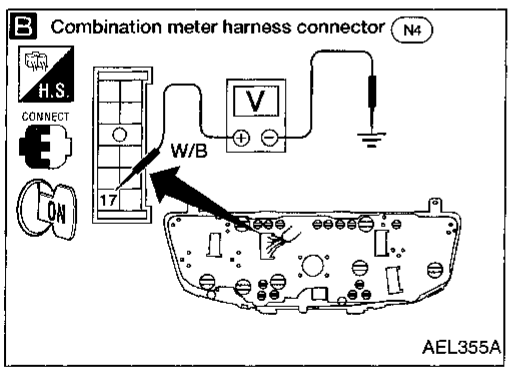

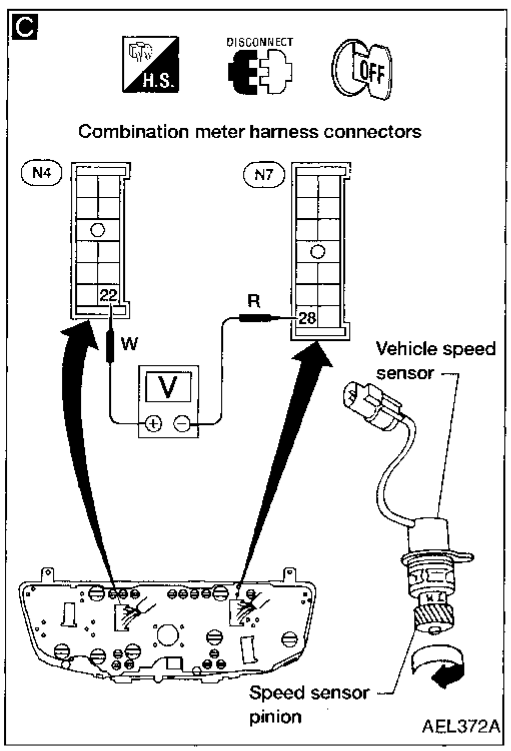

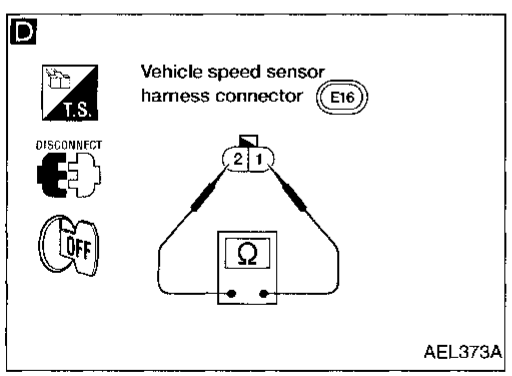

Inspection/Speedometer and Vehicle Speed Sensor

SYMPTOM: Speedometer stays at 0 km/h (0 MPH).

INSPECTION START

A

CHECK GROUND CIRCUIT OF SPEEDOMETER.
Check continuity between terminal 21 and body ground.
Continuity should exist.

NG → Repair harness or connector.

OK ↓

B

CHECK POWER SOURCE.
1. Turn ignition switch ON.
2. Check voltage between terminal 17 and body ground.
Battery voltage should exist.

NG → Check the following items:
- Harness continuity between battery terminal and combination meter
- Ignition relay-1
- Fusible link and fuse
- Ignition switch

OK ↓

C

CHECK VEHICLE SPEED SENSOR OUTPUT.
1. Remove vehicle speed sensor from transmission. Leave harness connector connected.
2. Check voltage between terminal 22 and 28 while quickly turning vehicle speed sensor pinion.
Voltage: Approx. 0.5V (AC)

OK → Replace speedometer.

NG ↓

D

CHECK VEHICLE SPEED SENSOR.
Check resistance between terminals 1 and 2.
Resistance: Approx. 250Ω.

NG → Replace vehicle speed sensor.

OK ↓

Repair harness or connector between speedometer and vehicle speed sensor.

INSPECTION END

Inspection/Speedometer and Vehicle Speed Sensor (Cont'd)

SYMPTOM: Speedometer indication flutters.

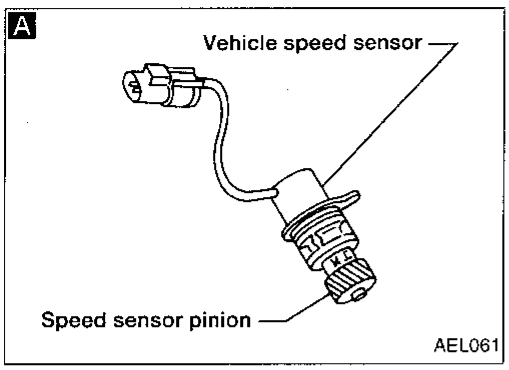

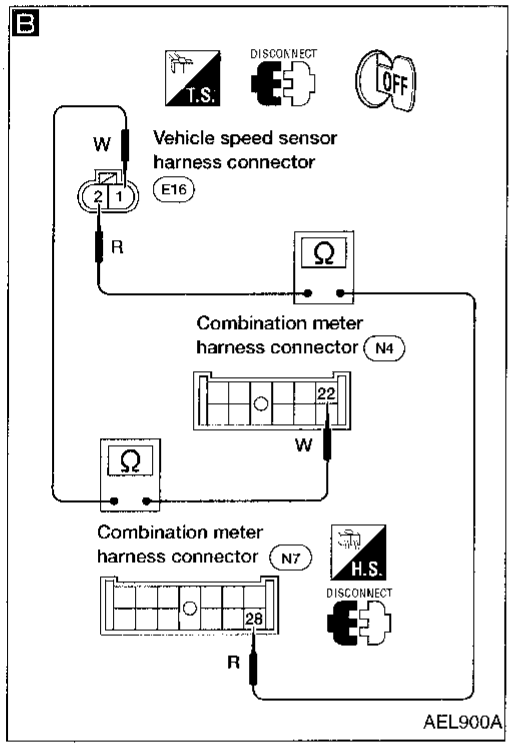

INSPECTION START

↓

Is vehicle speed sensor installed properly? Check for looseness. — NG → Install vehicle speed sensor properly.

OK ↓

A

CHECK VEHICLE SPEED SENSOR. Do you feel resistance when turning vehicle speed sensor pinion? — No → Replace vehicle speed sensor.

Yes ↓

B

CHECK HARNESS CONTINUITY. Check continuity between speedometer terminal 28 and vehicle speed sensor terminal 2, and between 22 and 1. **Continuity should exist.** — NG → Repair harness and connector.

OK ↓

Replace speedometer.

Inspection/Speedometer and Fuse

SYMPTOM: Speedometer does not go back to 0 km/h (0 MPH).

INSPECTION START

↓

Check fuse related to speedometer. — NG → Replace fuse.

OK ↓

Drive at over 80 km/h (50 MPH).

NG ↓

Replace speedometer.

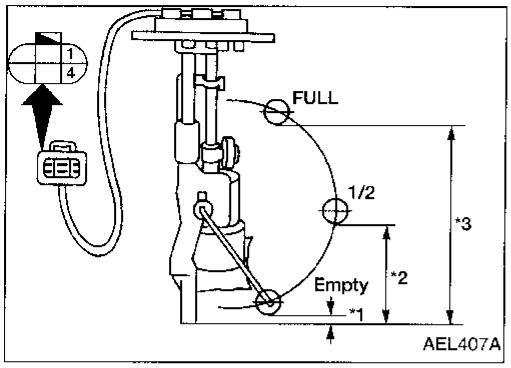

Fuel Tank Gauge Unit Check

- For removal, refer to FE section ("Fuel Pump and Gauge", "FUEL SYSTEM").

Check the resistance between terminals ① and ④.

Ohmmeter (+)	Ohmmeter (−)	Float position mm (in)			Resistance value (Ω)
①	④	*3	Full	241 (9.49)	Approx. 4.5 - 5.5
		*2	1/2	115 (4.53)	Approx. 31.5 - 33.5
		*1	Empty	8 (0.31)	Approx. 80 - 83

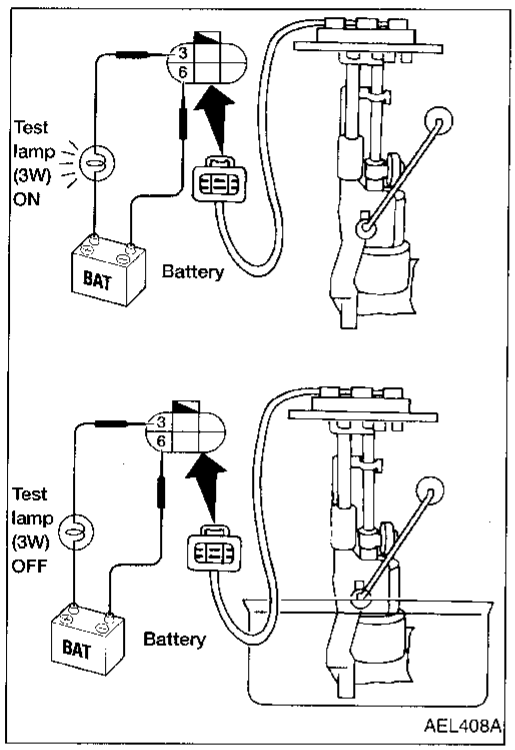

Fuel Warning Lamp Sensor Check

- It will take a short time for the bulb to light.

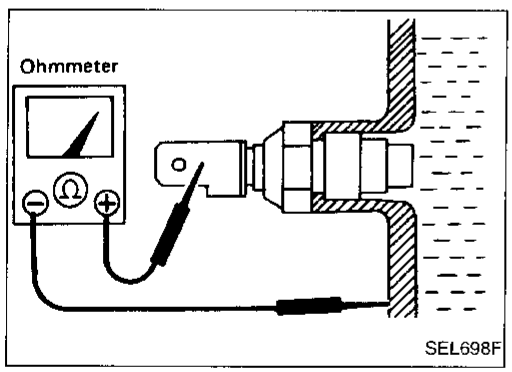

Thermal Transmitter Check

Check the resistance between the terminals of thermal transmitter and body ground.

Water temperature	Resistance
60°C (140°F)	Approx. 70 - 90Ω
100°C (212°F)	Approx. 21 - 24Ω

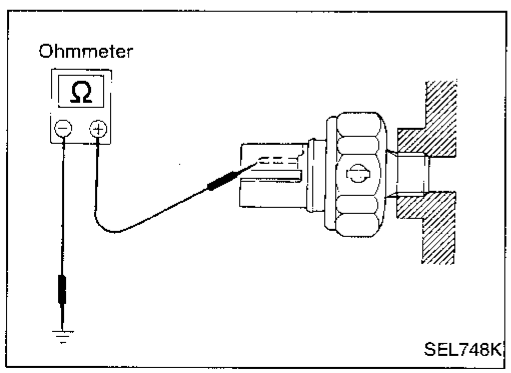

Oil Pressure Switch Check

	Oil pressure kPa (kg/cm², psi)	Continuity
Engine start	More than 10 - 20 (0.1 - 0.2, 1.4 - 2.8)	No
Engine stop	Less than 10 - 20 (0.1 - 0.2, 1.4 - 2.8)	Yes

Check the continuity between the terminals of oil pressure switch and body ground.

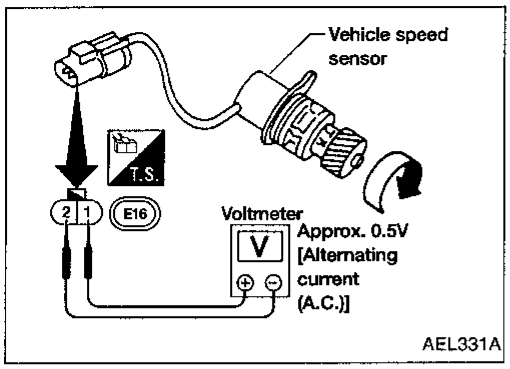

Vehicle Speed Sensor Signal Check

1. Remove vehicle speed sensor from transmission.
2. Turn vehicle speed sensor pinion quickly and measure voltage across ① and ②.

System Description

With the ignition switch in the ON or START position, power is supplied:
- through 10A fuse (No. 11, located in the fuse block)
- to combination meter terminal ⑰, and
- to 4WD switch terminal ①.

With the ignition switch in the ON or START position, power is supplied:
- through 15A fuse (No. 9 , located in the fuse block)
- to bulb check relay terminal ②.

Ground is supplied:
- to combination meter terminal ㊷,
- bulb check relay terminal ⑤,
- brake fluid level switch terminal ②, and
- washer fluid level switch terminal ② (For Canada models only)
- through body grounds M49 , M105 and M160 .

Ground is supplied:
- to seat belt buckle terminal ②, and
- fuel tank gauge unit terminal ⑥
- through body ground M177 .

AIR BAG WARNING LAMP

During prove out or when an air bag malfunction occurs, the ground path is interrupted:
- from the air bag diagnosis sensor unit terminal ⑮
- to combination meter terminal ㊴.

Ground is then supplied:
- through combination meter terminal ㊷.

With power and ground supplied, the air bag warning lamp (LEDs) illuminate.
For further information, refer to RS section ("TROUBLE DIAGNOSES").

LOW FUEL LEVEL WARNING LAMP

The amount of fuel in the fuel tank is determined by the fuel level sensor in the fuel tank. A signal is sent from fuel tank gauge unit terminal ③ to combination meter terminal ⑯. The fuel level sensor will illuminate the low fuel level warning lamp when the fuel level is low.
With power and ground supplied, the low fuel level warning lamp illuminates.

LOW OIL PRESSURE WARNING LAMP

Low oil pressure causes oil pressure switch terminal ① to provide ground to combination meter terminal ㉔.
With power and ground supplied, the low oil pressure warning lamp illuminates.

LOW WASHER FLUID LEVEL WARNING LAMP (For Canada models only)

When the washer fluid level is low, ground is supplied:
- to combination meter terminal ㉗
- from washer fluid level switch terminal ①.

With power and ground supplied, the low washer fluid level warning lamp illuminates.

SEAT BELT WARNING LAMP

When the driver's seat belt is unfastened, ground is supplied:
- to combination meter terminal ㉕
- from seat belt buckle switch terminal ①.

With power and ground supplied, the seat belt warning lamp illuminates.

MALFUNCTION INDICATOR LAMP

During prove out or when an engine control malfunction occurs, ground is supplied:
- to combination meter terminal ⑮
- from ECM terminal ⑱.

With power and ground supplied, the malfunction indicator lamp illuminates.
For further information, refer to EC section ["Malfunction Indicator Lamp (MIL)", "ON-BOARD DIAGNOSTIC SYSTEM DESCRIPTION"].

System Description (Cont'd)

ABS WARNING LAMP

During prove out or when an ABS malfunction occurs, ground is supplied:
- to combination meter terminal ⑬
- from ABS control unit terminal ②.

With power and ground supplied, the ABS warning lamp illuminates.
For further information, refer to BR section ("Self-diagnosis", "TROUBLE DIAGNOSES").

BRAKE WARNING LAMP

When the parking brake is applied, or the brake fluid level is low, ground is supplied:
- to combination meter terminal ㉖
- from parking brake switch terminal ①, or
- brake fluid level switch terminal ①.

With power and ground supplied, the brake warning lamp illuminates.

BULB CHECK RELAY (brake warning lamp prove out)

When the ignition switch is in the ON or START position, and the generator grounds terminal ③, ground is supplied to the bulb check relay terminal ①.
With power and ground supplied, the bulb check relay is energized, providing a ground path for the brake warning lamp:
- through combination meter terminal ⑳
- to bulb check relay terminal ③.

With power and ground supplied, the brake warning lamp illuminates.

CHARGE WARNING LAMP

During prove out or when a generator malfunction occurs, ground is supplied:
- to combination meter terminal ㉓
- from generator terminal ③.

With power and ground supplied, the charge warning lamp illuminates.

4WD INDICATOR LAMP (with 4-wheel drive)

When the 4WD switch is activated, power is supplied:
- from 4WD switch terminal ①
- to combination meter terminal ㊱.

With power and ground supplied, the 4WD indicator lamp illuminates.

Schematic

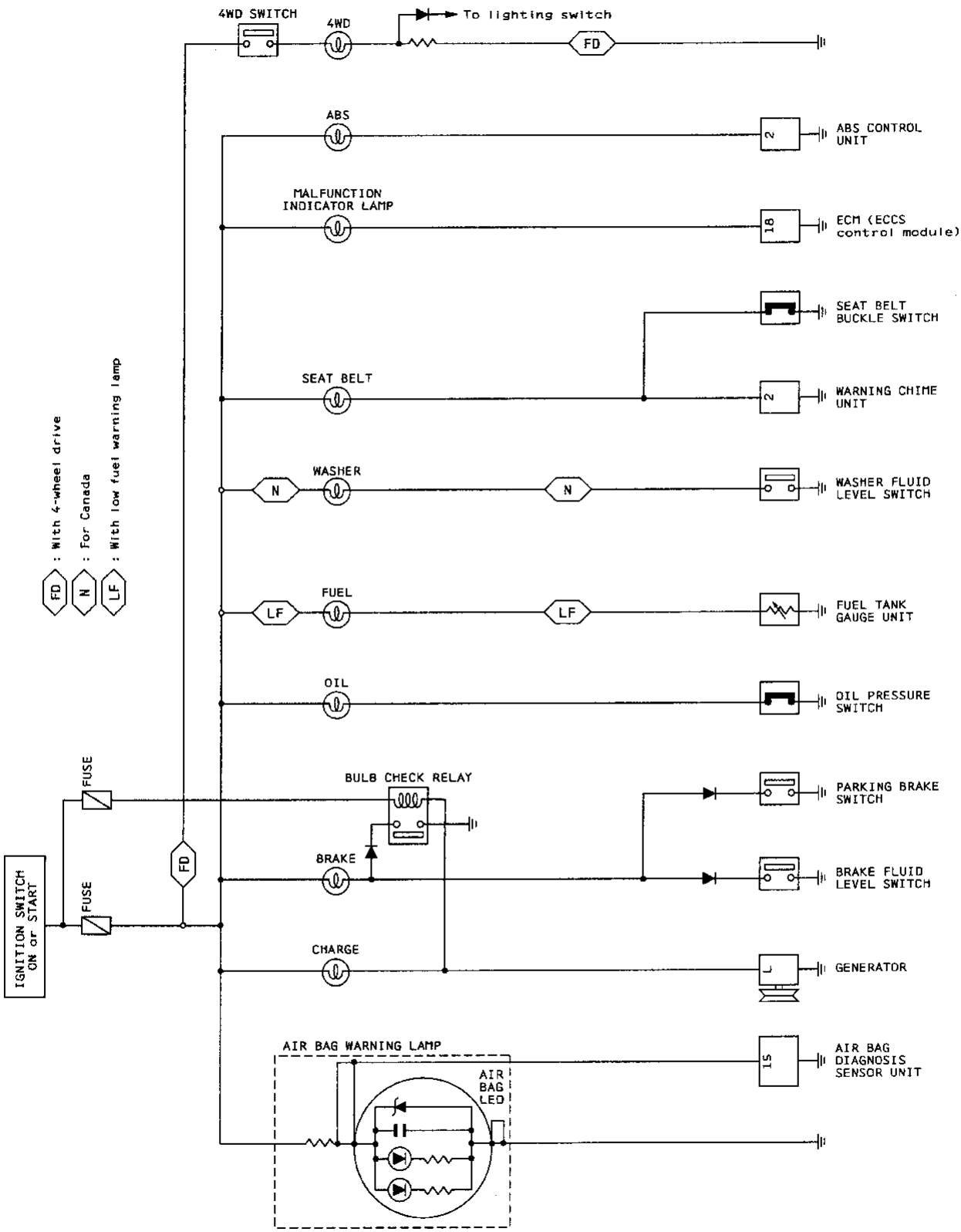

AEL295A

Wiring Diagram –WARN–

EL-WARN-01

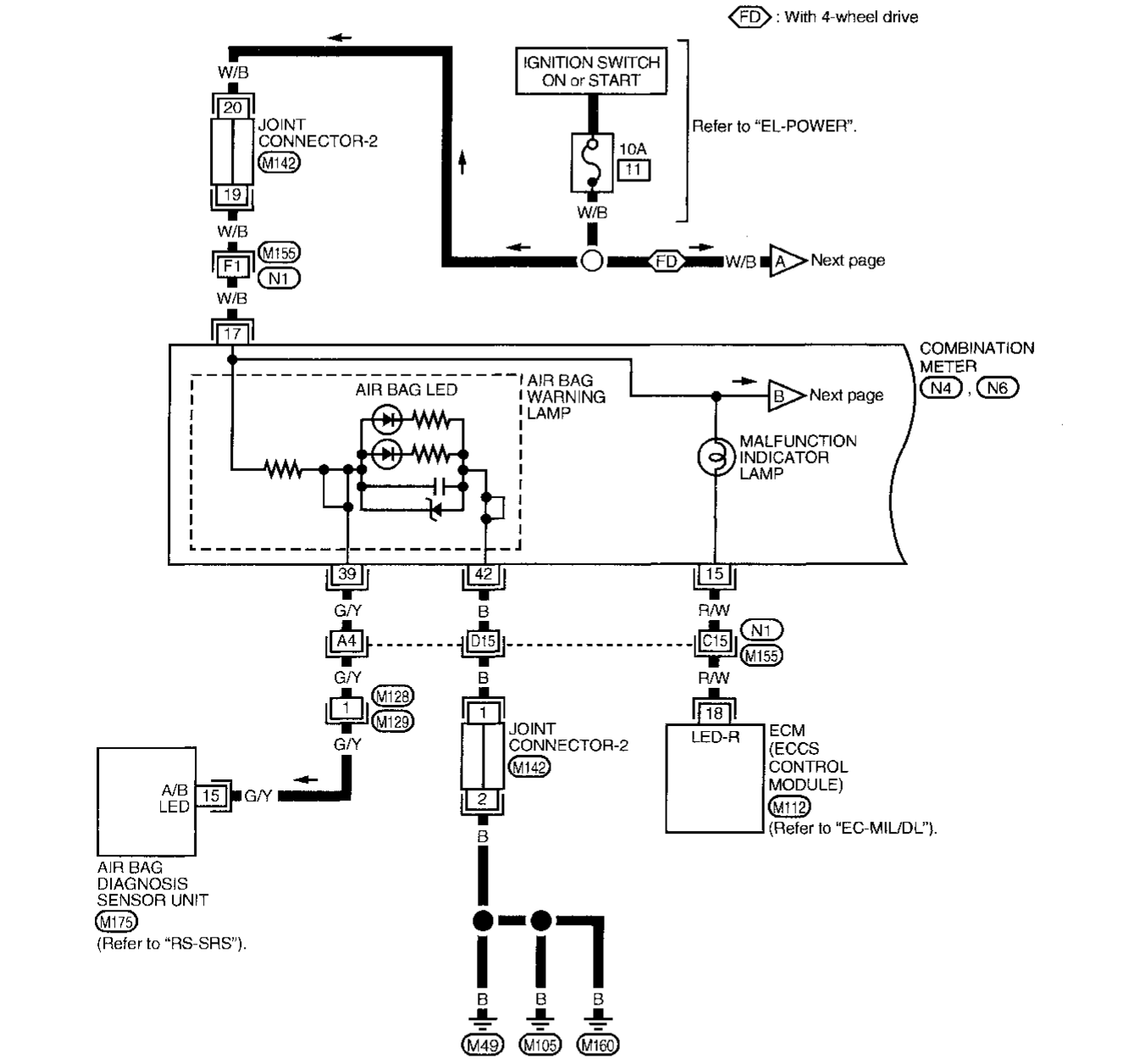

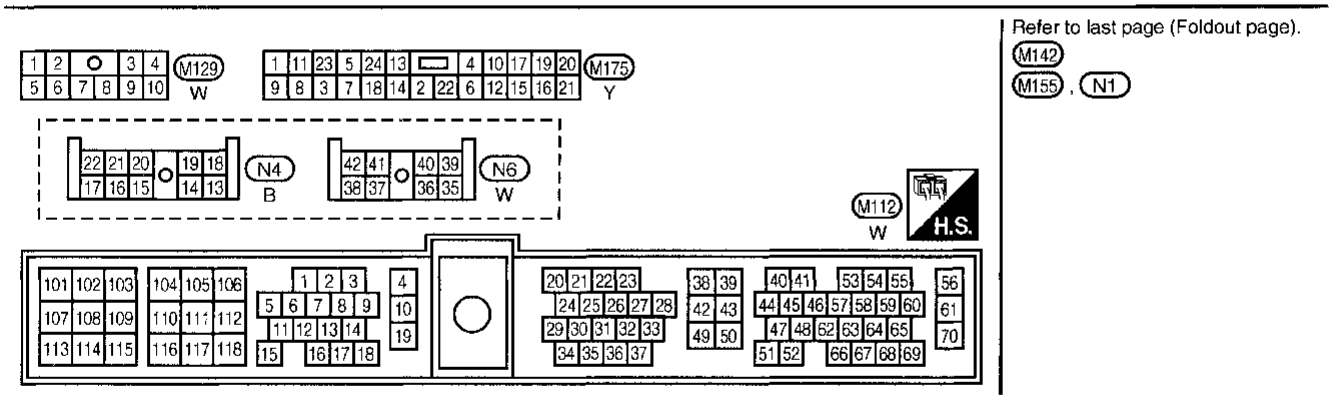

AEL877A

Wiring Diagram –WARN– (Cont'd)

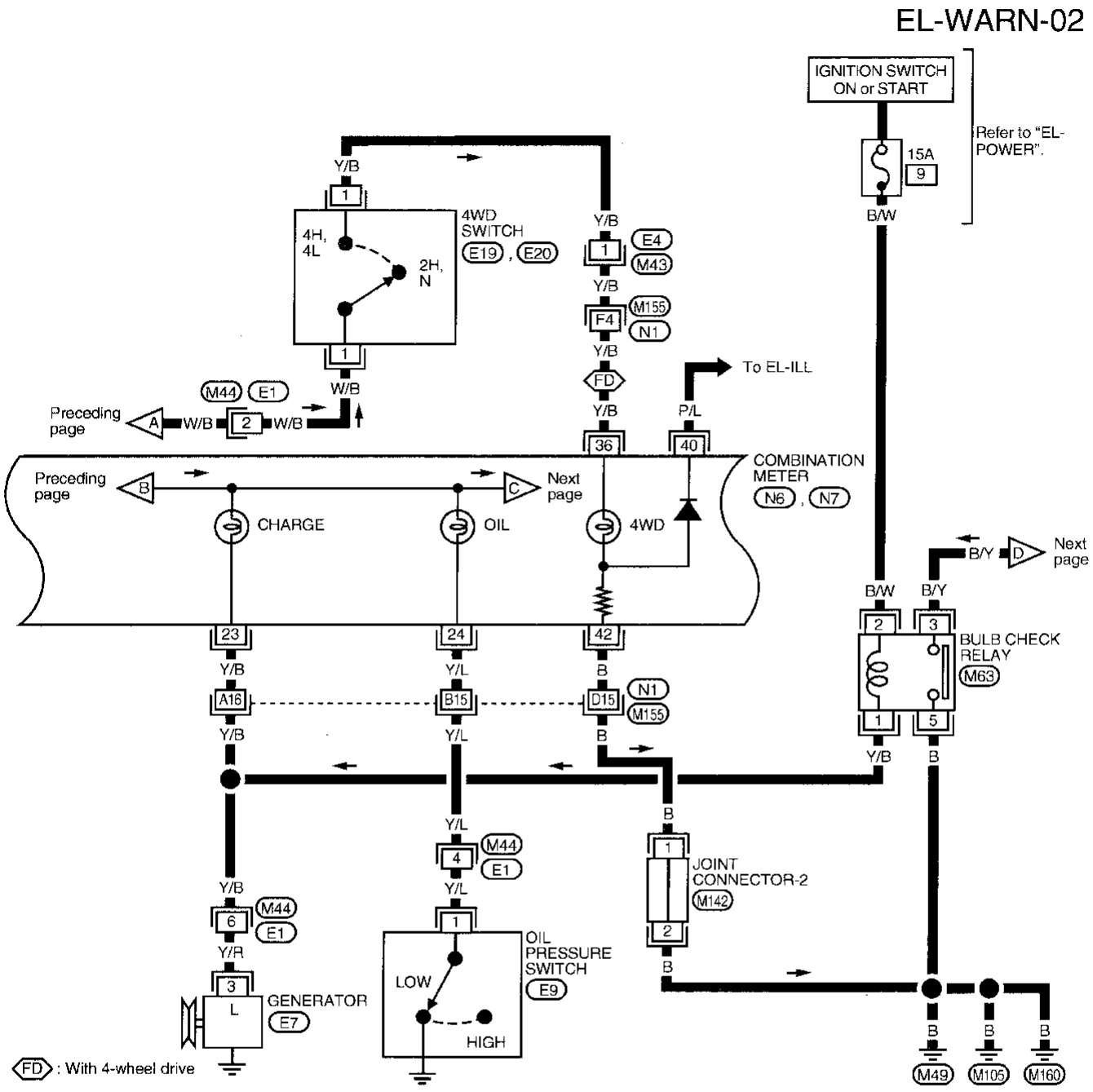

Wiring Diagram –WARN– (Cont'd)

EL-WARN-03

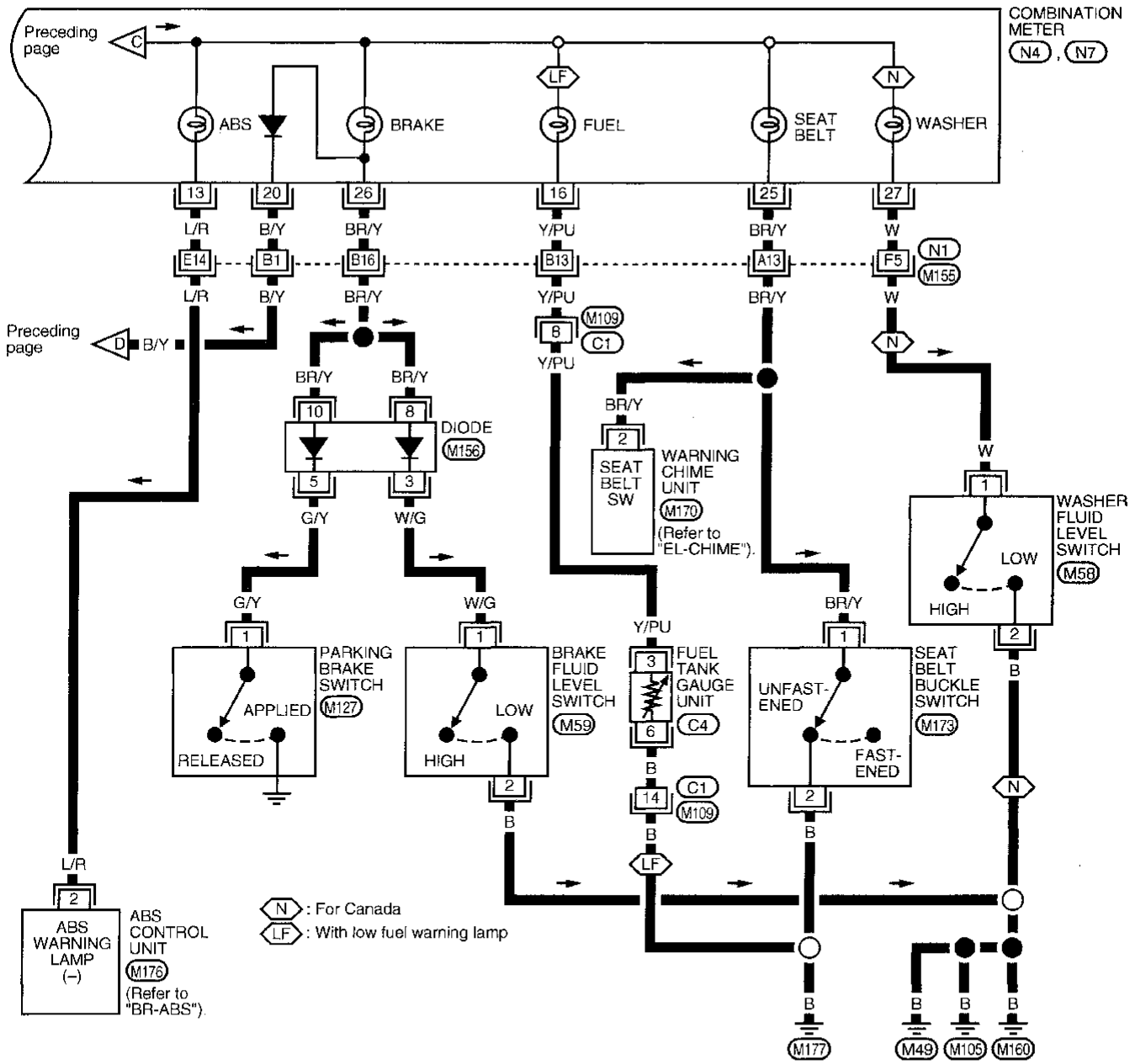

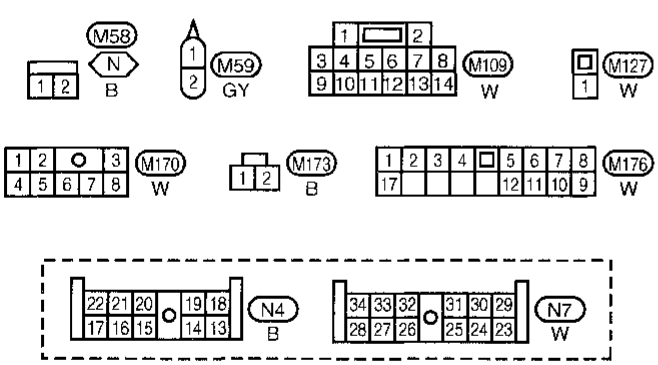

Refer to last page (Foldout page).
M155 , N1

AEL879A

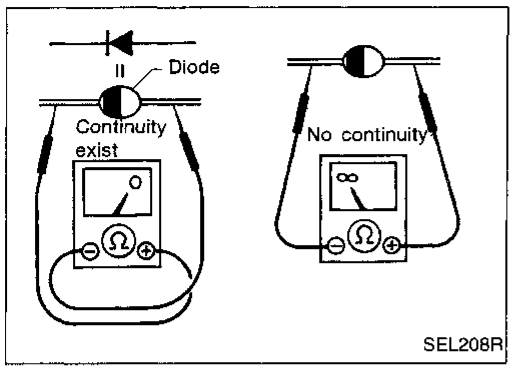

Diode Check

- Check continuity using an ohmmeter.
- Diode is functioning properly if test results are as shown in the figure at left.

NOTE: Specifications may vary depending on the type of tester. Before performing this inspection, be sure to refer to the instruction manual for the tester to be used.

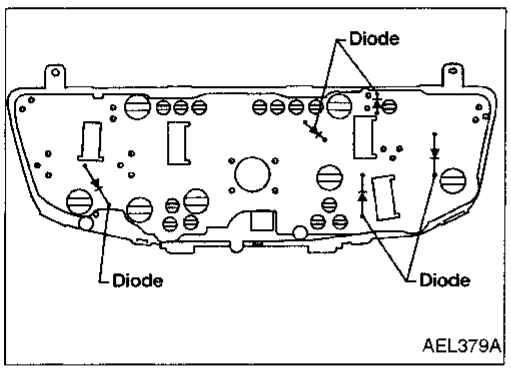

- Diodes for warning lamps are built into the combination meter printed circuit.

Refer to EL-66.

System Description

The warning chime is combined with the warning chime unit.
Power is supplied at all times:
- through 10A fuse (No. 21 , located in the fuse block)
- to key switch terminal ①.

Power is supplied at all times:
- through 10A fuse (No. 22 , located in the fuse block)
- to lighting switch terminal ①.

With the ignition switch in the ON or START position, power is supplied:
- through 10A fuse (No. 11 located in the fuse block)
- to warning chime unit terminal ③.

Ground is supplied to warning chime unit terminal ④ through body grounds M49 , M105 and M160 .

Ignition key warning chime

With the key inserted in the ignition switch in the OFF or ACC position, and the driver's door open, the warning chime will sound. A battery positive voltage signal is sent:
- from key switch terminal ②
- to warning chime unit terminal ⑦.

Ground is supplied:
- from door switch LH terminal ③
- to warning chime unit terminal ⑤.

Door switch LH terminal ① is grounded through body ground M177 .

Light warning chime

With the ignition switch in the OFF or ACC position, the driver's door open, and the lighting switch in the 1ST or 2ND position, the warning chime will sound. A battery positive voltage signal is sent:
- from lighting switch terminal ⑤
- to warning chime unit terminal ⑧.

Ground is supplied:
- from door switch LH terminal ③
- to warning chime unit terminal ⑤.

Door switch LH terminal ① is grounded through body ground M177 .

Seat belt warning chime

With the ignition switch turned from the OFF or ACC position to the ON position, and the seat belt unfastened (seat belt buckle switch ON), the warning chime will sound for approximately 7 seconds.
Ground is supplied:
- from seat belt buckle switch terminal ①
- to warning chime unit terminal ②.

Seat belt buckle switch terminal ② is grounded through body ground M177 .

Wiring Diagram –CHIME–

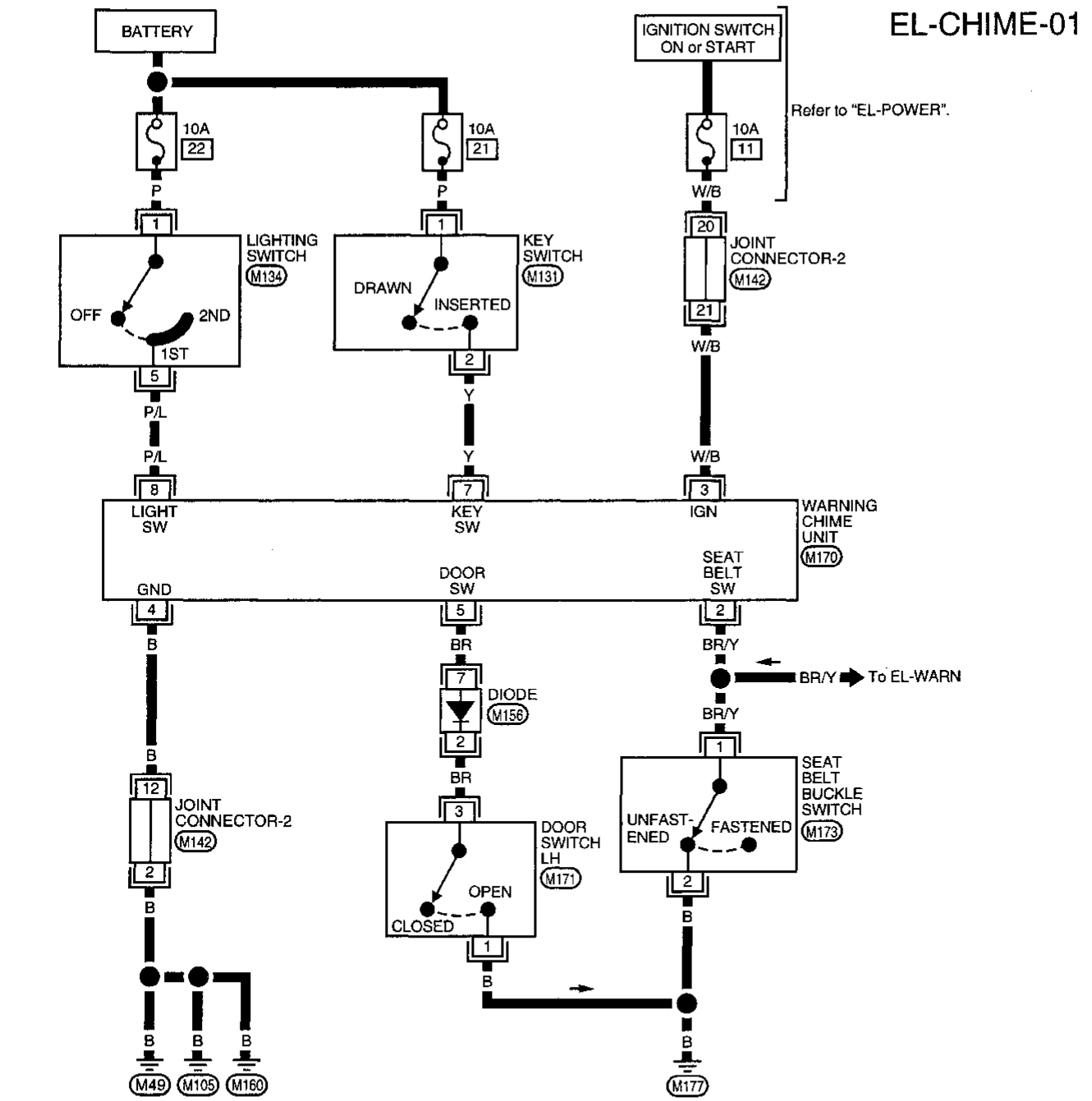

Refer to last page (Foldout page).
M142

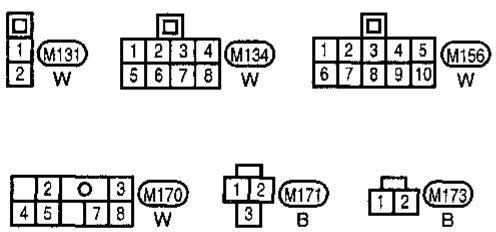

AEL278A

Trouble Diagnoses

SYMPTOM CHART

PROCEDURE	Preliminary Check			Main Power Supply and Ground Circuit Check	Diagnostic Procedure		
REFERENCE PAGE	EL-86	EL-86	EL-86	EL-87	EL-88	EL-89	EL-90
SYMPTOM	Preliminary check 1	Preliminary check 2	Preliminary check 3	Main power supply and Ground circuit check	Diagnostic Procedure 1	Diagnostic Procedure 2	Diagnostic Procedure 3
Light warning chime does not activate.	○			○	○		
Ignition key warning chime does not activate.		○		○		○	
Seat belt warning chime does not activate.			○	○			○

Trouble Diagnoses (Cont'd)

PRELIMINARY CHECK

Preliminary check 1

- **Light warning chime does not activate.**

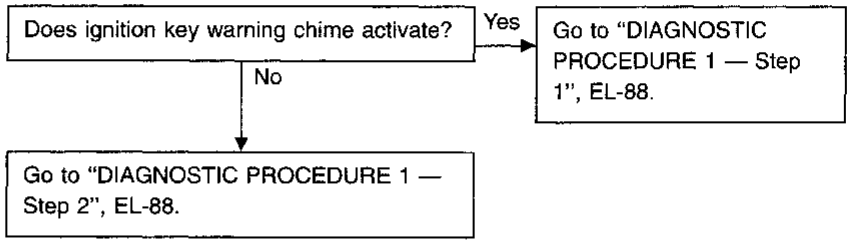

Preliminary check 2

- **Ignition key warning chime does not activate.**

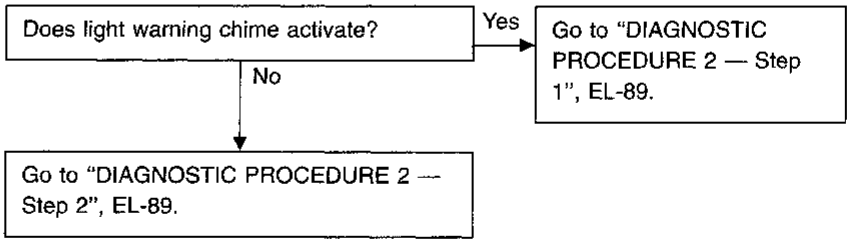

Preliminary check 3

- **Seat belt warning chime does not activate.**

Go to "DIAGNOSTIC PROCEDURE 3", EL-90.

Trouble Diagnoses (Cont'd)

MAIN POWER SUPPLY AND GROUND CIRCUIT CHECK

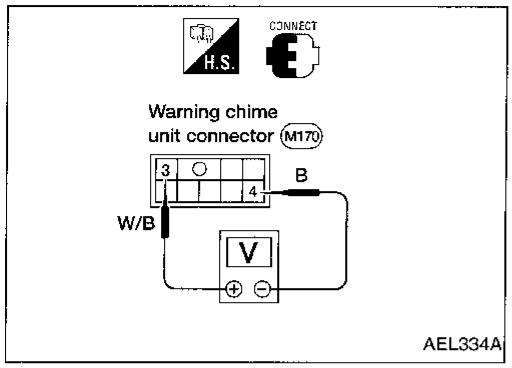

Main power supply

Terminals	Battery positive voltage existence condition		
	Ignition switch position		
	OFF	ACC	ON
③ - ④	No	No	Yes

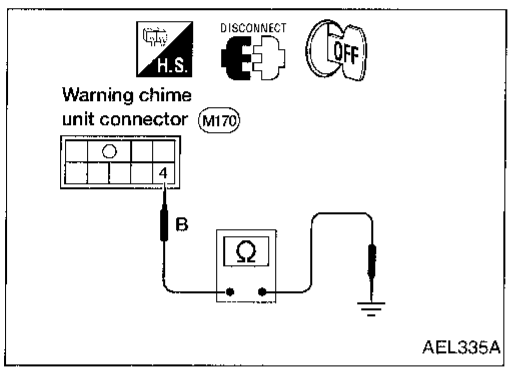

Ground circuit

Terminals	Continuity
④ - Ground	Yes

Trouble Diagnoses (Cont'd)

DIAGNOSTIC PROCEDURE 1

SYMPTOM: Light warning chime does not activate.

- Perform "PRELIMINARY CHECK — Procedure 1" before referring to the following flow chart.

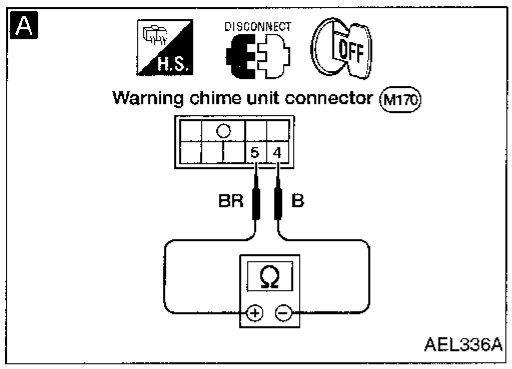

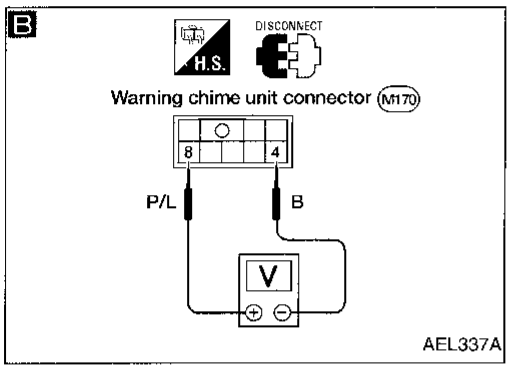

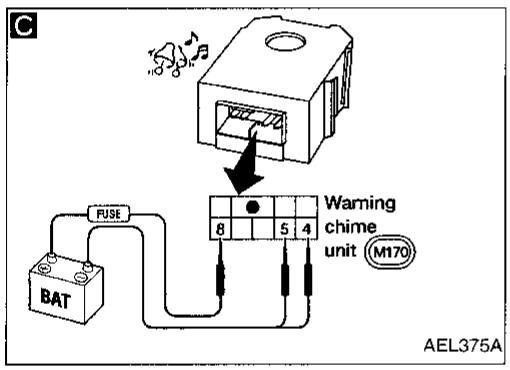

A — Step 2

DOOR SWITCH INPUT SIGNAL CHECK.
Check continuity between warning chime unit harness terminals ⑤ and ④.

Condition of driver's door	Continuity
LH door is closed.	No
LH door is open.	Yes

NG →
- Check door switch. (Refer to EL-91.)
- Check harness continuity between warning chime unit harness terminal ⑤ and LH door switch harness terminal ③. **Continuity should exist.**
- Check harness continuity between LH door switch harness terminal ① and body ground. **Continuity should exist.**

Note: Pay attention to tester polarity*.

OK ↓

B — Step 1

LIGHTING SWITCH INPUT SIGNAL CHECK.
Measure voltage between warning chime unit harness terminals ⑧ and ④.

Condition	Voltage [V]
Lighting switch is ON.	Approx. 12
Lighting switch is OFF.	0

NG →
- Check lighting switch. (Refer to EL-91.)
- Check harness continuity between warning chime unit harness terminal ⑧ and lighting switch harness terminal ⑤. **Continuity should exist.**
- Measure voltage between lighting switch harness terminal ① and body ground. **Battery voltage should exist.**

OK ↓

C

WARNING CHIME CHECK.
1. Disconnect warning chime unit connector.
2. Apply 12V direct current across ⑧ and ④, ⑤.

Does warning chime work?

No → Replace warning chime unit.

Yes ↓

INSPECTION END

***: Specifications may vary depending on the type of tester. Before performing this inspection, refer to the instruction manual of the tester.**

Trouble Diagnoses (Cont'd)

DIAGNOSTIC PROCEDURE 2

SYMPTOM: Ignition key warning chime does not activate.

- Perform "PRELIMINARY CHECK — Procedure 2" before referring to the following flow chart.

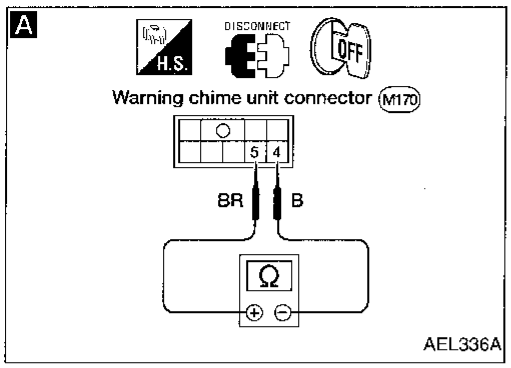

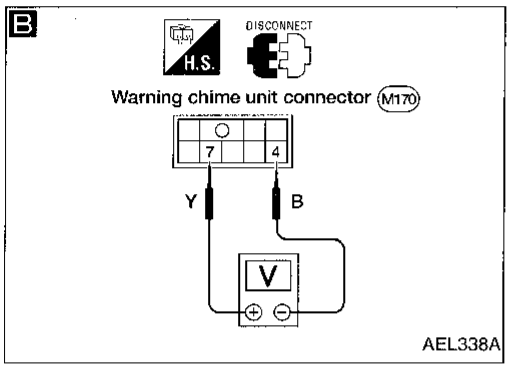

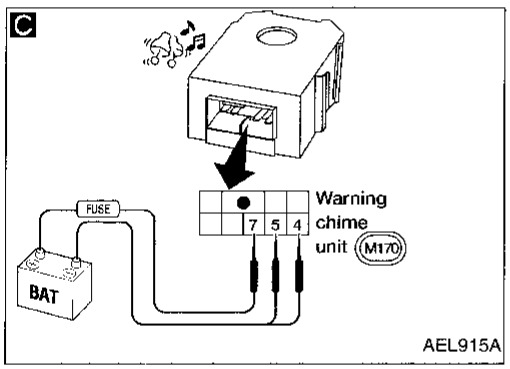

A Step 2

DOOR SWITCH INPUT SIGNAL CHECK.
Check continuity between warning chime unit harness terminals ⑤ and ④.

Condition of driver's door	Continuity
LH door is closed.	No
LH door is open.	Yes

NG →
- Check door switch. (Refer to EL-91.)
- Check harness continuity between warning chime unit harness terminal ⑤ and LH door switch harness terminal ③. **Continuity should exist.**
- Check harness continuity between LH door switch harness terminal ① and body ground. **Continuity should exist.**

OK ↓

B Step 1

IGNITION KEY SWITCH INPUT SIGNAL CHECK.
Measure voltage between warning chime unit harness terminals ⑦ and ④.

Condition	Voltage [V]
Key is inserted.	Approx. 12
Key is drawn.	0

NG →
- Check ignition key switch. (Refer to EL-91.)
- Check harness continuity between warning chime unit harness terminal ⑦ and key switch harness terminal ②. **Continuity should exist.**
- Measure voltage between key switch harness terminal ① and body ground. **Battery voltage should exist.**

OK ↓

C

WARNING CHIME CHECK.
1. Disconnect warning chime unit connector.
2. Apply 12V direct current across ⑦ and ④, ⑤.

Does warning chime work?

No → Replace warning chime unit.

Yes ↓

INSPECTION END

Trouble Diagnoses (Cont'd)

DIAGNOSTIC PROCEDURE 3

SYMPTOM: Seat belt warning chime does not activate.

- Perform "PRELIMINARY CHECK — Procedure 3" before referring to the following flow chart.

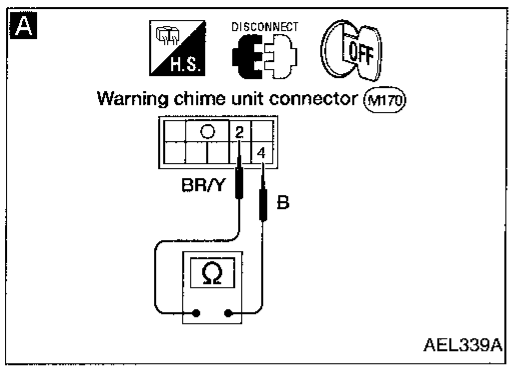

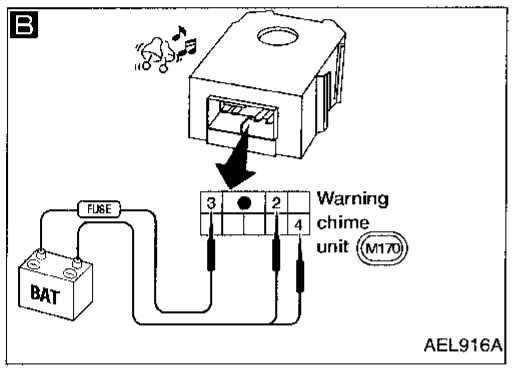

A

SEAT BELT SWITCH INPUT SIGNAL CHECK.
Check continuity between warning chime unit harness terminals ② and ④.

Condition	Continuity
Unfastened	Yes
Fastened	No

NG →
- Check seat belt buckle switch. (Refer to EL-91.)
- Check harness continuity between warning chime unit harness terminal ② and seat belt buckle switch harness terminal ①. **Continuity should exist.**
- Check harness continuity between seat belt buckle switch harness terminal ② and body ground. **Continuity should exist.**

OK ↓

B

WARNING CHIME CHECK.
1. Disconnect warning chime unit connector.
2. Apply 12V direct current across ③ and ④, ②.

Does warning chime work?

No → Replace warning chime unit.

Yes ↓

INSPECTION END

Trouble Diagnoses (Cont'd)

ELECTRICAL COMPONENTS INSPECTION

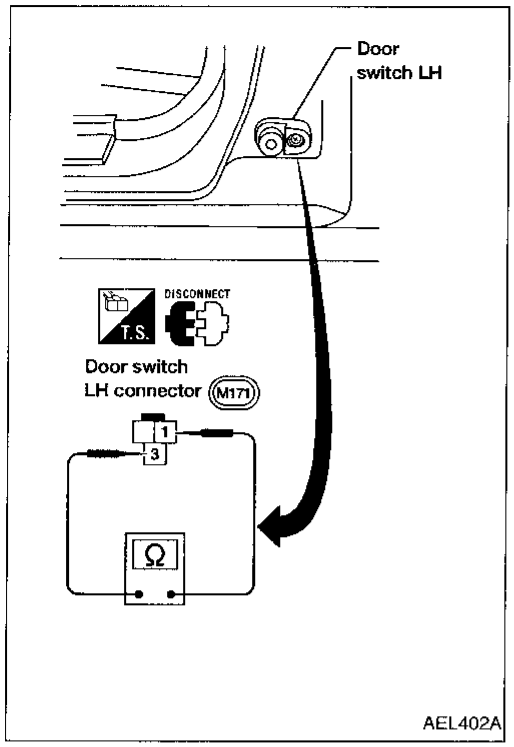

AEL402A

Door switch

Check continuity between terminals ① and ③ when door switch is pushed and released.

Terminal No.	Condition	Continuity
① - ③	Door switch is pushed.	No
	Door switch is released.	Yes

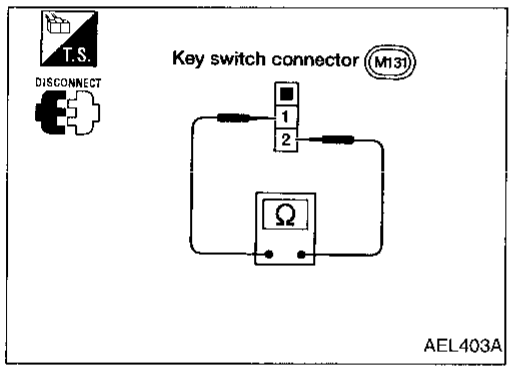

AEL403A

Key switch

Check continuity between terminals ① and ② when ignition key is drawn and inserted.

Terminal No.	Condition	Continuity
① - ②	Ignition key is drawn.	No
	Ignition key is inserted.	Yes

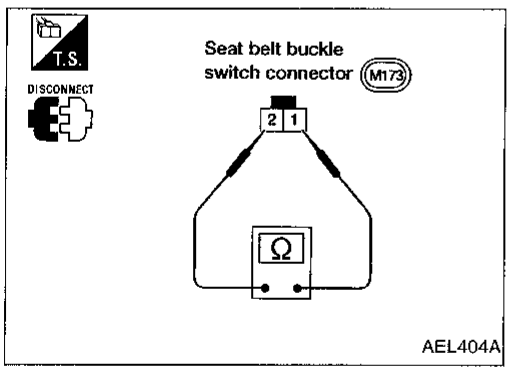

AEL404A

Seat belt buckle switch

Check continuity between terminals ① and ② when seat belt LH is fastened and unfastened.

Terminal No.	Condition	Continuity
① - ②	Seat belt LH is fastened.	No
	Seat belt LH is unfastened.	Yes

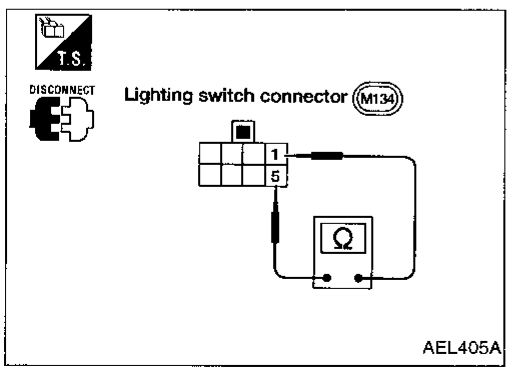

AEL405A

Lighting switch

Check continuity between terminals ① and ⑤ when lighting switch is turned to OFF and 1st or 2nd position.

Terminal No.	Condition	Continuity
① - ⑤	Lighting switch is turned to OFF position.	No
	Lighting switch is turned to 1st or 2nd position.	Yes

System Description

WIPER OPERATION

The wiper switch is controlled by a lever built into the combination switch.
There are three wiper switch positions:
- LO speed
- HI speed
- INT (Intermittent) (if equipped).

With the ignition switch in the ACC or ON position, power is supplied:
- through 20A fuse (No. 7 , located in the fuse block)
- to wiper motor terminal ④.

Low and high speed wiper operation

Ground is supplied to wiper switch terminal ⑥ through body grounds M49 , M105 and M160 .
When the wiper switch is placed in the LO position, ground is supplied:
- through terminal ④ of the wiper switch
- to wiper motor terminal ②.

With power and ground supplied, the wiper motor operates at low speed.
When the wiper switch is placed in the HI position, ground is supplied:
- through terminal ③ of the wiper switch
- to wiper motor terminal ③.

With power and ground supplied, the wiper motor operates at high speed.

Auto stop operation

When the wiper switch is placed in the OFF position, the wiper motor will continue to operate until the wiper arms reach the base of the windshield.
When the wiper switch is placed in the OFF position, ground is supplied:
- from terminal ④ of the wiper switch
- to wiper motor terminal ②, in order to continue wiper motor operation at low speed.

The ground path to terminal ④ of the wiper switch is supplied:
- through terminal ⑧ of the wiper switch
- to wiper amplifier shorting connector terminal ③ (without intermittent wipers), or
- to wiper amplifier terminal ③ (with intermittent wipers)
- through wiper amplifier shorting connector terminal ⑥ (without intermittent wipers), or
- through wiper amplifier terminal ⑥ (with intermittent wipers)
- to wiper motor terminal ⑤
- through terminal ⑥ of the wiper motor, and
- through body grounds M49 , M105 and M160 .

The ground path is interrupted and the wiper motor stops when the wiper arms reach the base of the windshield.

Intermittent operation

The wiper motor operates the wiper arms one time at low speed at a set interval of approximately 4 to 12 seconds. This feature is controlled by the wiper amplifier.
When the wiper switch is placed in the INT position, ground is supplied:
- to wiper amplifier terminal ④
- from wiper switch terminal ⑦
- through wiper switch terminal ⑥, and
- through body grounds M49 , M105 and M160 .

The desired interval time is input:
- to wiper amplifier terminal ⑤
- from wiper switch terminal ①.

Based on these two inputs, an intermittent ground is supplied:
- to wiper motor terminal ②
- through the wiper switch terminal ④
- to wiper switch terminal ⑧
- from wiper amplifier terminal ③.

With power and ground supplied, the wiper motor is activated.
The wiper motor operates at low speed at the desired time interval.

WASHER OPERATION

With the ignition switch in the ACC or ON position, power is supplied:

- through 20A fuse (No. 7 , located in the fuse block)
- to washer motor terminal ①.

When the lever is pulled to the WASH position, ground is supplied:

- to washer motor terminal ②, and
- to wiper amplifier terminal ⑦ (with intermittent wipers)
- from terminal ⑤ of the wiper switch
- through terminal ⑥ of the wiper switch, and
- through body grounds M49 , M105 and M160 .

With power and ground supplied, the washer motor operates.
The wiper motor operates twice at low speed for approximately 3 seconds to clean the windshield. This feature is controlled by the wiper amplifier in the same manner as the intermittent operation.

Wiring Diagram –WIPER–

MODELS WITH INTERMITTENT WIPERS

EL-WIPER-01

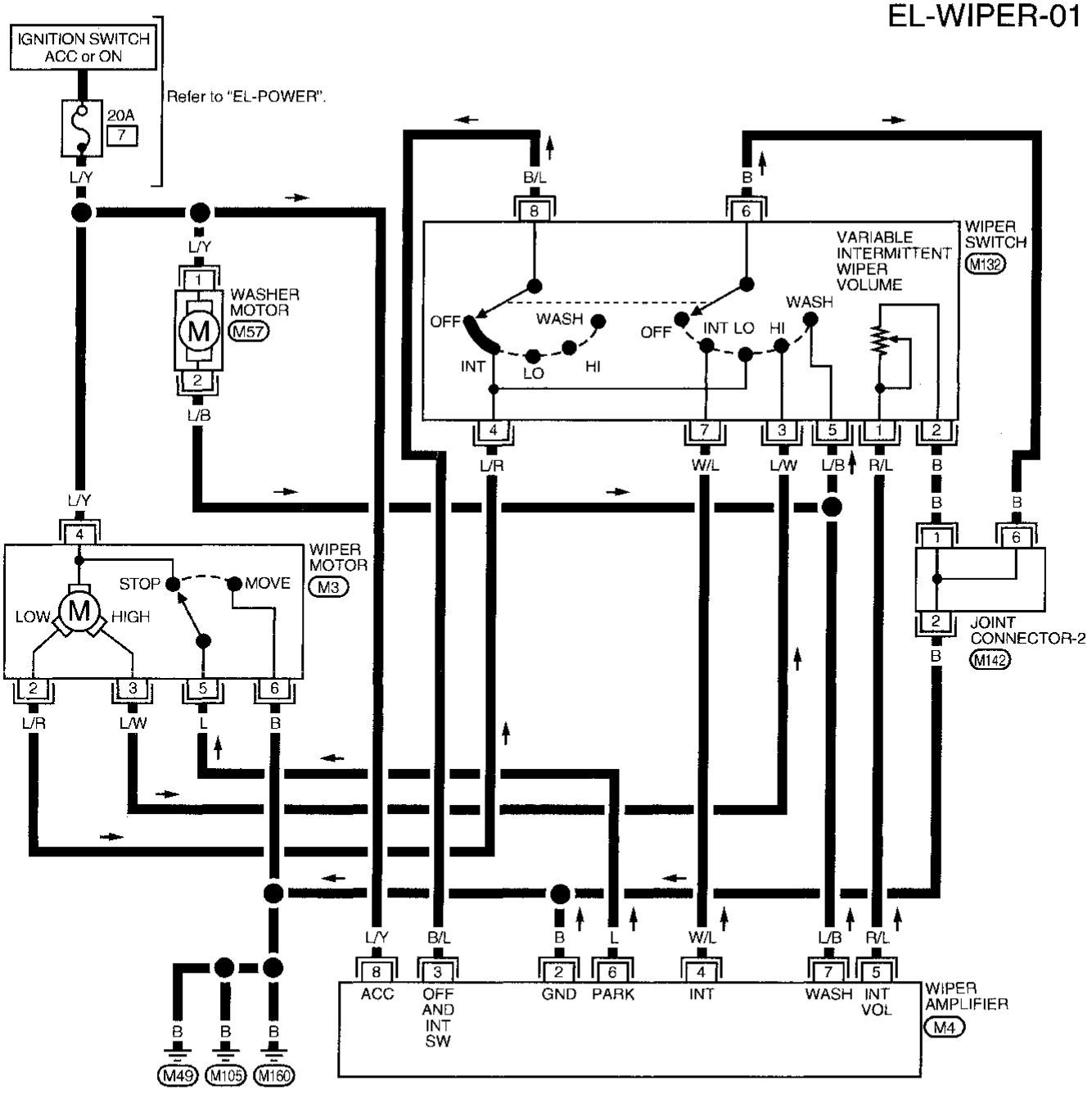

Refer to last page (Foldout page).
M142

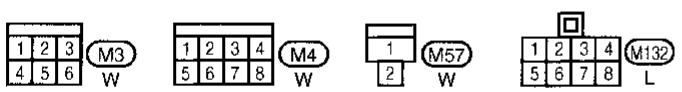

AEL880A

Wiring Diagram –WIPER– (Cont'd)

MODELS WITHOUT INTERMITTENT WIPERS

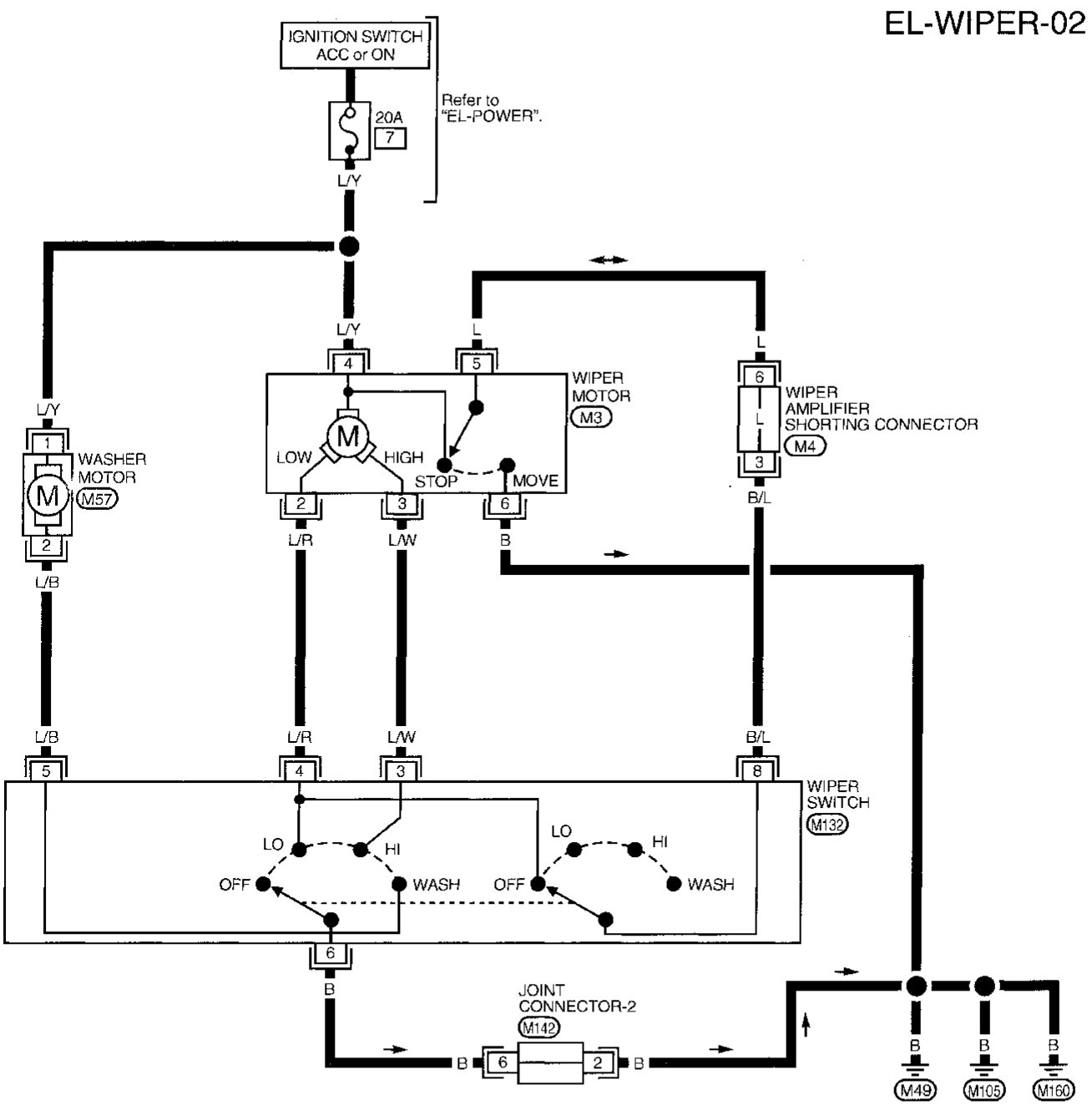

Refer to last page (Foldout page).
M142

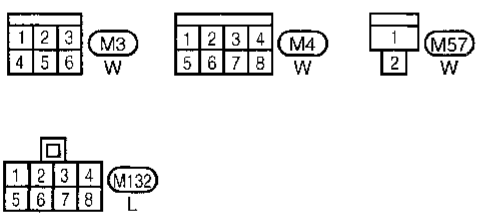

AEL881A

Trouble Diagnoses

DIAGNOSTIC PROCEDURE 1

(Models with intermittent wipers)
SYMPTOM: Intermittent wiper does not operate.

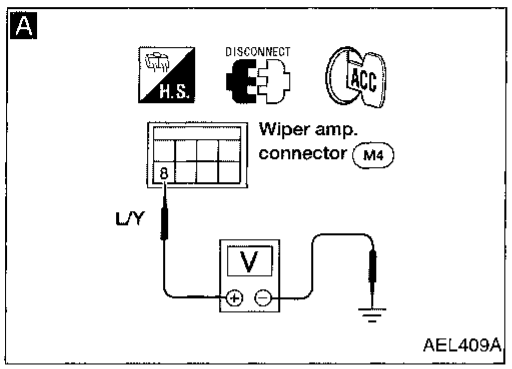

A

CHECK POWER SUPPLY FOR WIPER AMPLIFIER.
1. Turn ignition switch to ACC.
2. Measure voltage between wiper amplifier terminal ⑧ and body ground.

Battery voltage should exist.

NG → Check 20A fuse (No. 7, located in the fuse block), harness and connector.

OK ↓

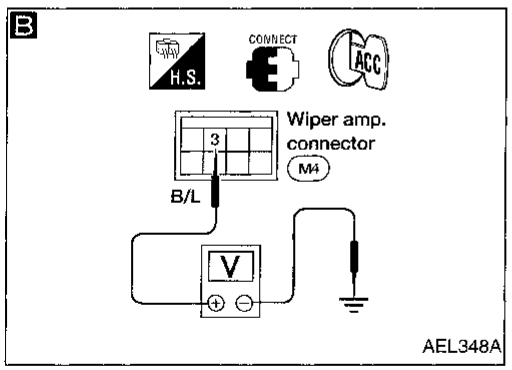

B

WIPER AMP. OUTPUT SIGNAL CHECK.
1. Turn ignition switch to ACC.
2. Move wiper switch to INT or OFF.
3. Measure voltage between wiper amp. harness terminal ③ and body ground.

Condition of wiper switch	Voltage [V]
OFF	Approx. 12
INT	Pointer swings from 0 to 12 every 7 seconds

OK → Check wiper motor and circuit.

NG ↓

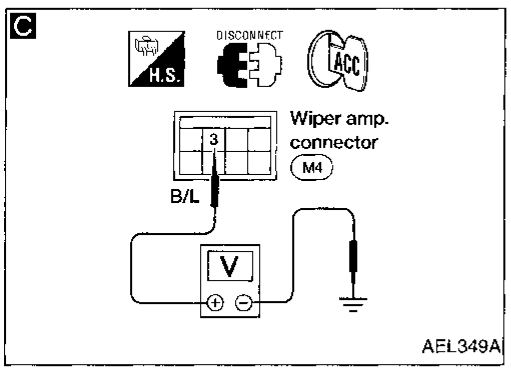

C

VOLTAGE CHECK.
1. Disconnect wiper amp. connector.
2. Turn ignition switch to ACC.
3. Measure voltage between wiper amp. harness terminal ③ and body ground.

Battery voltage should exist.

NG →
- Check wiper switch.
- Check wiper motor.
- Check harness continuity between wiper amp. harness terminal ③ and wiper switch harness terminal ⑧.
  Continuity should exist.
- Check harness continuity between wiper switch harness terminal ④ and wiper motor harness terminal ②.
  Continuity should exist.

OK ↓

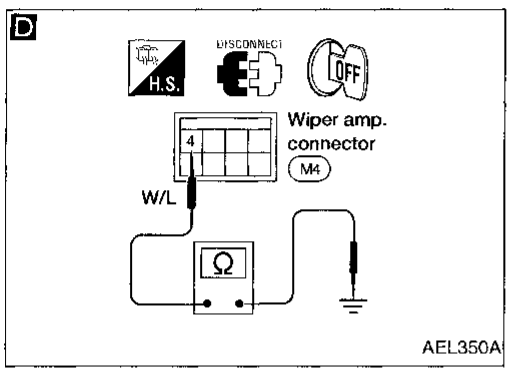

D

INTERMITTENT SWITCH INPUT SIGNAL CHECK.
Check harness continuity between wiper amp. harness terminal ④ and body ground.

Condition of wiper switch	Continuity
OFF	No
INT	Yes

NG →
- Check wiper switch.
- Check harness continuity between wiper amp. harness terminal ④ and wiper switch harness terminal ⑦.
  Continuity should exist.
- Check harness continuity between wiper switch harness terminal ⑥ and body ground.
  Continuity should exist.

OK ↓

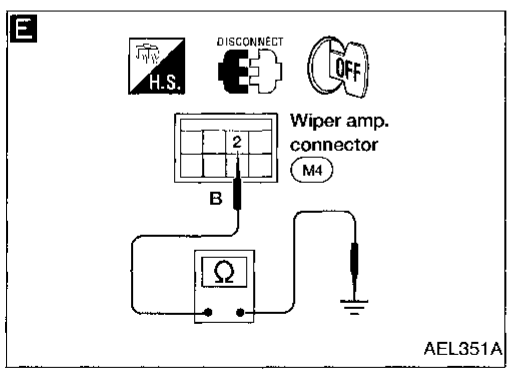

E

WIPER AMP. GROUND CIRCUIT CHECK.
Check harness continuity between wiper amp. harness terminal ② and body ground.

Continuity should exist.

NG → Repair harness or connector.

OK ↓

Replace wiper amp.

Trouble Diagnoses (Cont'd)

DIAGNOSTIC PROCEDURE 2

(Models with intermittent wipers)

SYMPTOM: Intermittent time of wiper cannot be adjusted.

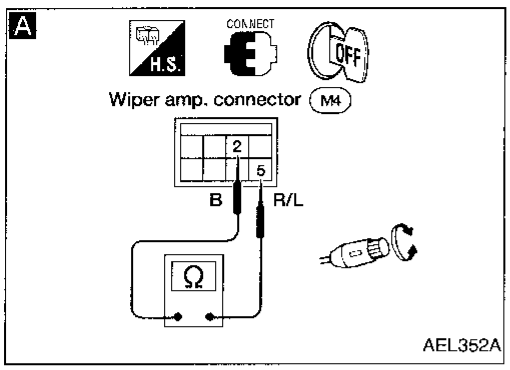

A

INTERMITTENT WIPER VOLUME INPUT SIGNAL CHECK.

Measure resistance between wiper amp. harness terminals ⑤ and ② while turning intermittent wiper volume.

Position of wiper knob	Resistance [KΩ]
S	0
L	Approx. 1

OK → Replace wiper amp.

NG ↓

- Check intermittent wiper volume.
- Check harness continuity between wiper amp. harness terminal ⑤ and wiper switch harness terminal ①.
  Continuity should exist.
- Check harness continuity between wiper switch harness terminal ② and body ground.
  Continuity should exist.

Trouble Diagnoses (Cont'd)

DIAGNOSTIC PROCEDURE 3

(Models with intermittent wipers)

SYMPTOM: Wiper and washer activate individually but not in combination.

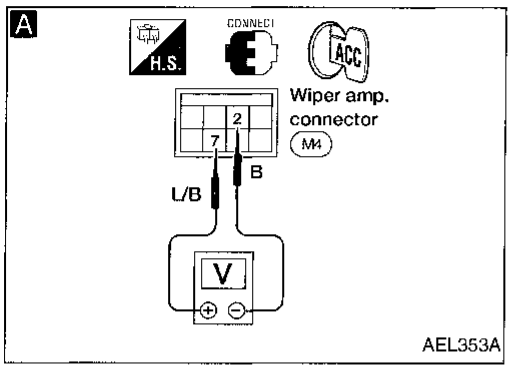

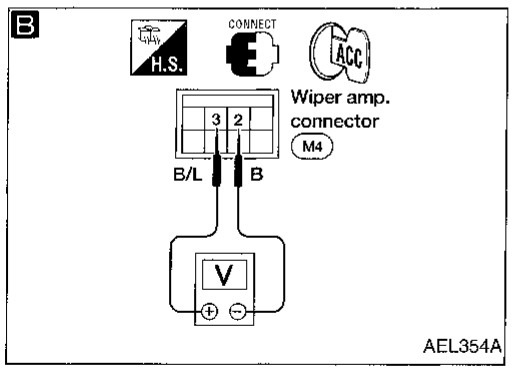

A

WASHER SWITCH INPUT SIGNAL CHECK.

1. Turn ignition switch to ACC.
2. Measure voltage between wiper amp. harness terminals ⑦ and ②.

Condition of washer switch	Voltage [V]
OFF	Approx. 12
ON	0

NG →
- Check wiper switch.
- Check harness continuity between wiper amp. harness terminal ⑦ and wiper switch harness terminal ⑤. **Continuity should exist.**
- Check harness continuity between wiper switch harness terminal ⑥ and body ground. **Continuity should exist.**

OK ↓

B

WIPER AMP. OUTPUT SIGNAL CHECK.

Measure voltage between wiper amp. harness terminals ③ and ② after operating washer switch.

0V for approx. 3 seconds after washer has operated.

NG → Check wiper switch.

OK ↓

Replace wiper amp.

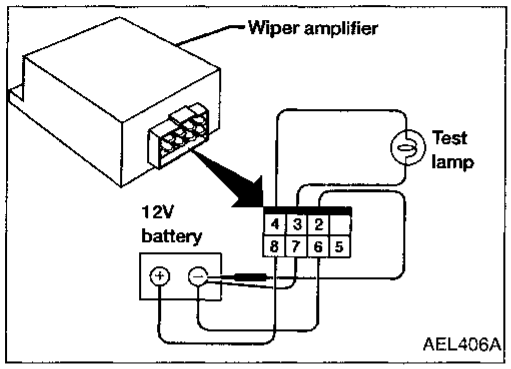

Wiper Amplifier Check

1. Connect as shown in the figure at left.
2. If test lamp comes on when connected to terminal ② and battery ground, wiper amplifier is normal.

Installation

1. Turn ignition ON.
2. Prior to wiper arm installation, turn on wiper switch and then turn it "OFF". Allow wiper to operate until its Auto Stop position is reached before turning ignition off.
3. Lift the blade up and then set it down onto glass surface. Set the blade center to clearance "C" just before tightening nut.
4. Eject washer fluid. Turn on wiper switch to operate wiper motor and then turn it "OFF".
5. Ensure that wiper blades stop within clearance "C".
   Clearance "C": 20 - 30 mm (0.79 - 1.18 in)

- Tighten windshield wiper arm nuts to specified torque.
  Windshield wiper:
  [O]: 13 - 18 N·m (1.3 - 1.8 kg-m, 9 - 13 ft-lb)

Windshield wiper and washer

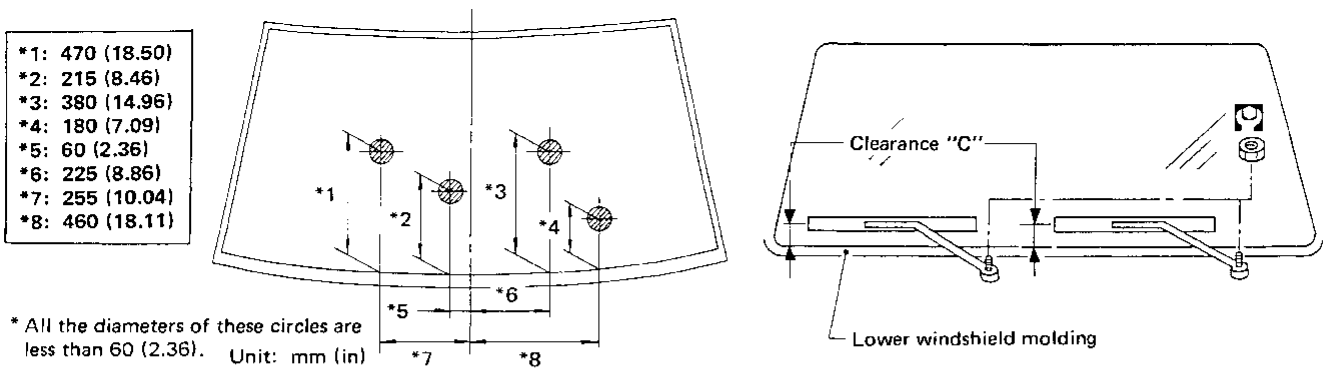

AEL400A

Installation (Cont'd)

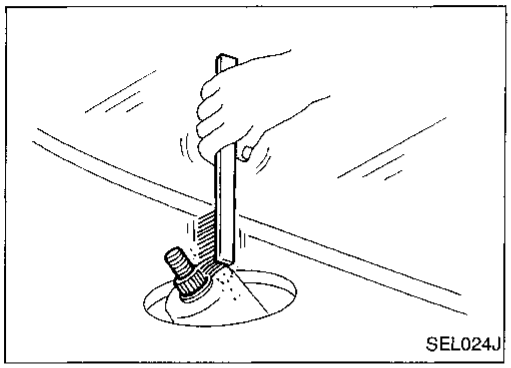

- **Before reinstalling wiper arm, clean the pivot area as illustrated. This will reduce possibility of wiper arm looseness.**

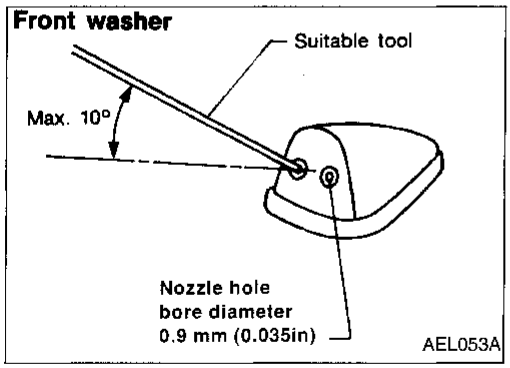

Washer Nozzle Adjustment

- Adjust washer nozzle with suitable tool as shown in the figure at left.
  Adjustable range: ±10°

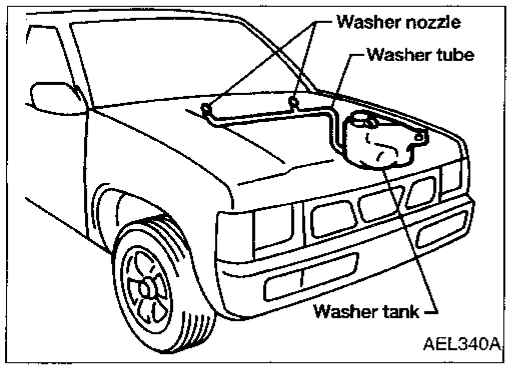

Wiring Diagram –HORN–

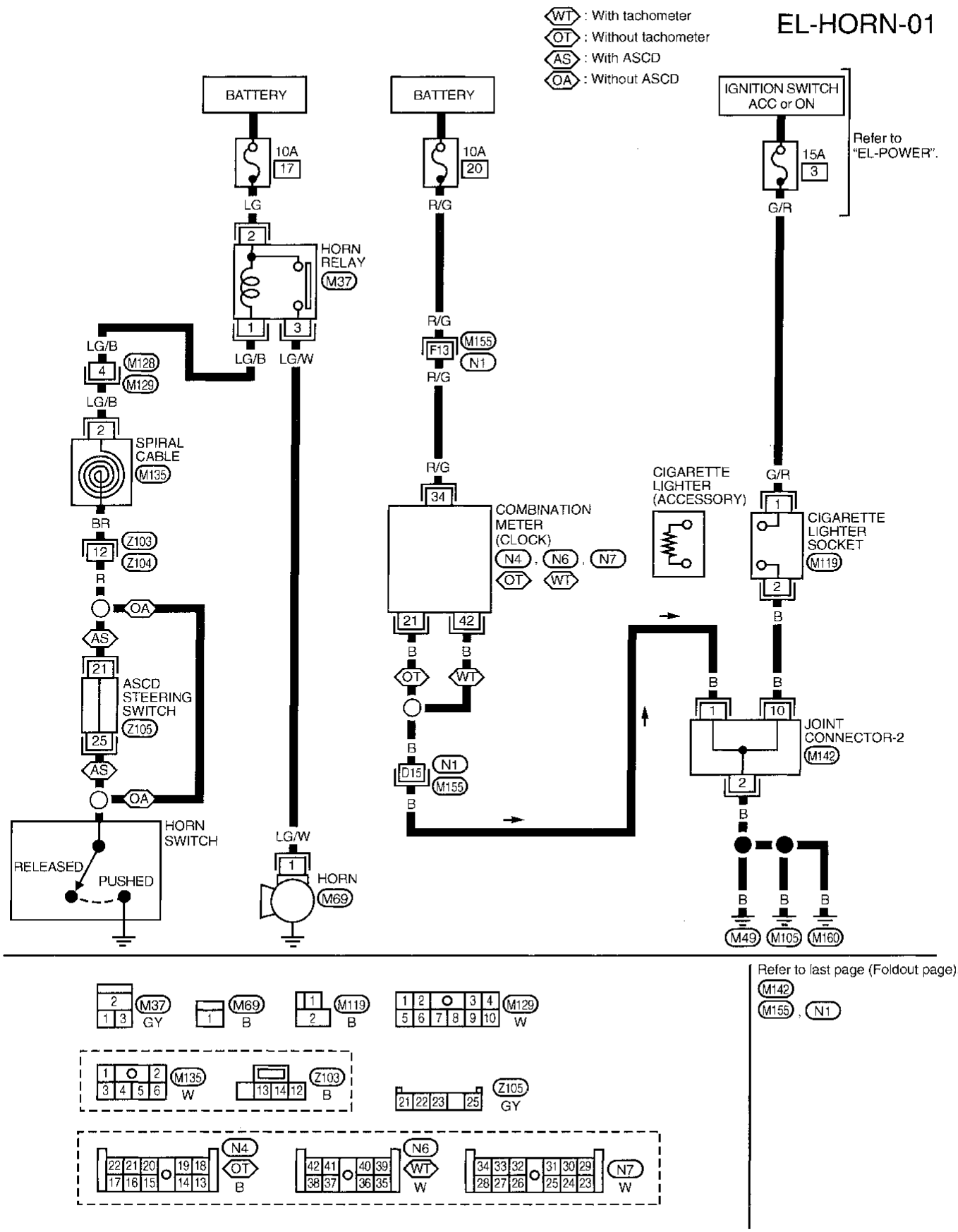

AEL882A

System Description

Refer to Owner's Manual for audio system operating instructions.

WITH PREMIUM AUDIO SYSTEM

Power is supplied at all times:
- through 10A fuse (No. 20 , located in the fuse block)
- to radio and cassette player terminal ⑥.

Power is supplied at all times:
- through 15A fuse (No. 1 , located in the fuse block)
- to rear speaker amplifier terminal ②.

With the ignition switch in the ACC or ON position, power is supplied:
- through 10A fuse (No. 6 , located in the fuse block)
- to radio and cassette player terminal ⑩.

Ground is supplied through the case of the radio and cassette player.
Ground is also supplied:
- to rear speaker amplifier terminal ⑦
- through body ground M177 .

When the system is on, remote on signal is supplied:
- from the radio and cassette player terminal ⑫
- to the rear speaker amplifier terminal ①.

And audio signals are supplied:
- through radio and cassette player terminals ①, ②, ③, ④, ⑬, ⑭, ⑮ and ⑯
- to terminals ⑤, ⑫, ④ and ⑪ of the rear speaker amplifier and the door speakers, and
- through rear speaker amplifier terminals ③, ⑩, ⑧ and ⑨
- to the rear speakers.

WITH BASE AUDIO SYSTEM

Power is supplied at all times:
- through 10A fuse (No. 20 , located in the fuse block)
- to radio and cassette player terminal ⑥.

With the ignition switch in the ACC or ON position, power is supplied:
- through 10A fuse (No. 6 , located in the fuse block)
- to radio and cassette player terminal ⑩.

Ground is supplied through the case of the radio and cassette player.
When the system is on, audio signals are supplied:
- through radio and cassette player terminals ①, ②, ③, and ④
- to the door speakers, and
- through radio and cassette player terminals ⑬, ⑭, ⑮ and ⑯ (with rear speakers)
- to the rear speakers (with rear speakers).

Schematic

PREMIUM AUDIO SYSTEM

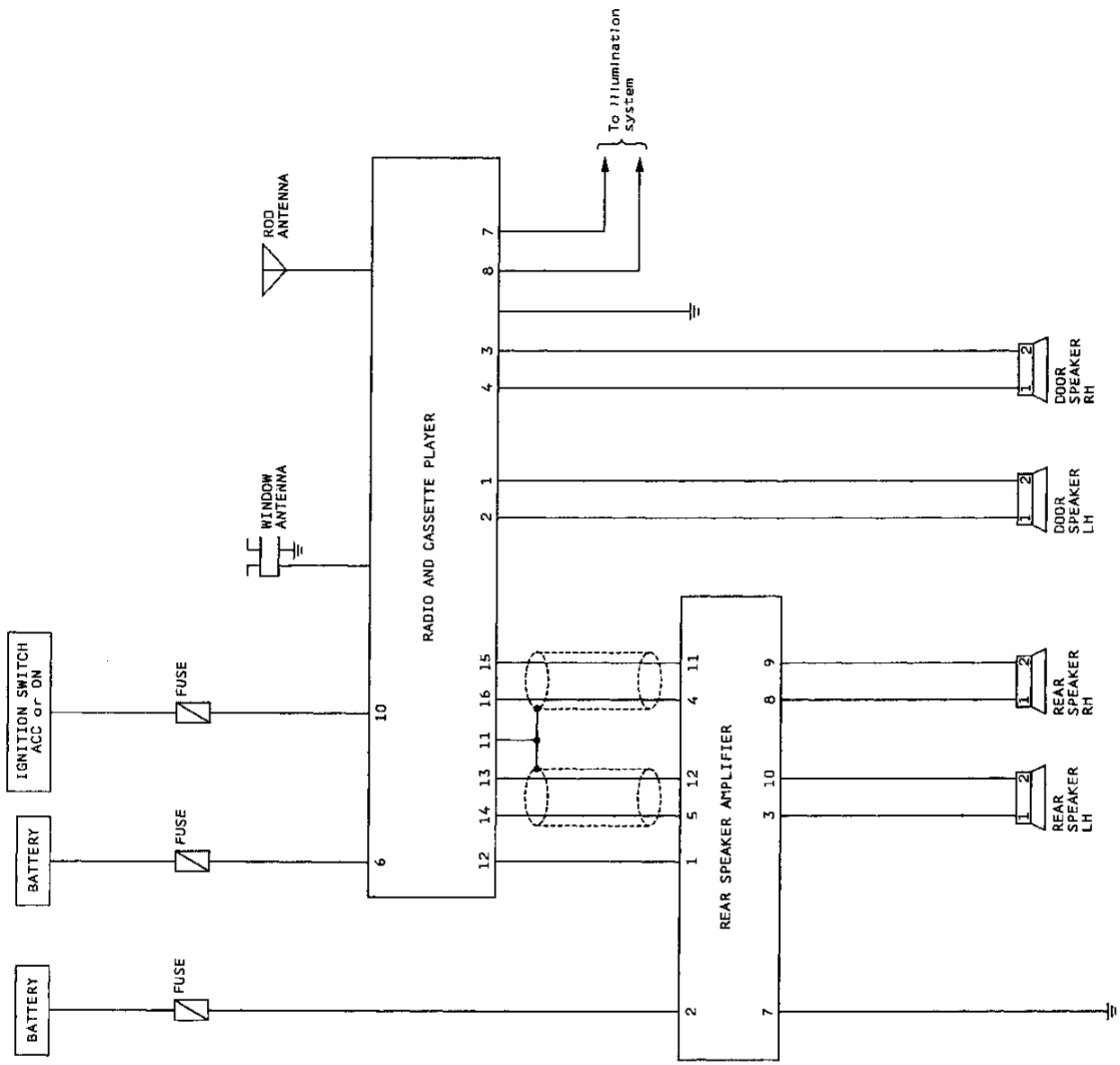

AEL294A

Wiring Diagram –AUDIO–

PREMIUM AUDIO SYSTEM

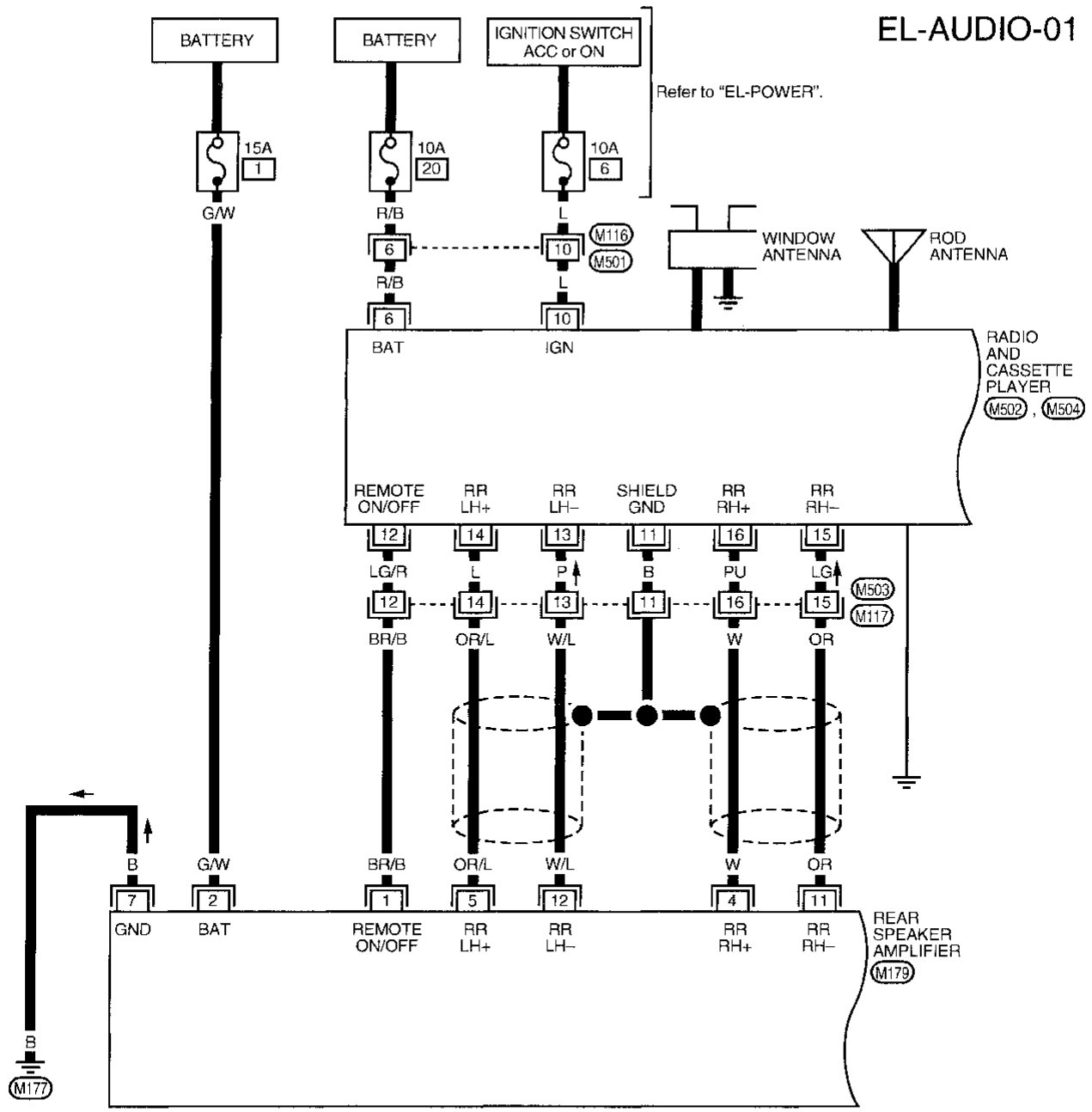

AEL883A

Wiring Diagram –AUDIO– (Cont'd)

EL-AUDIO-02

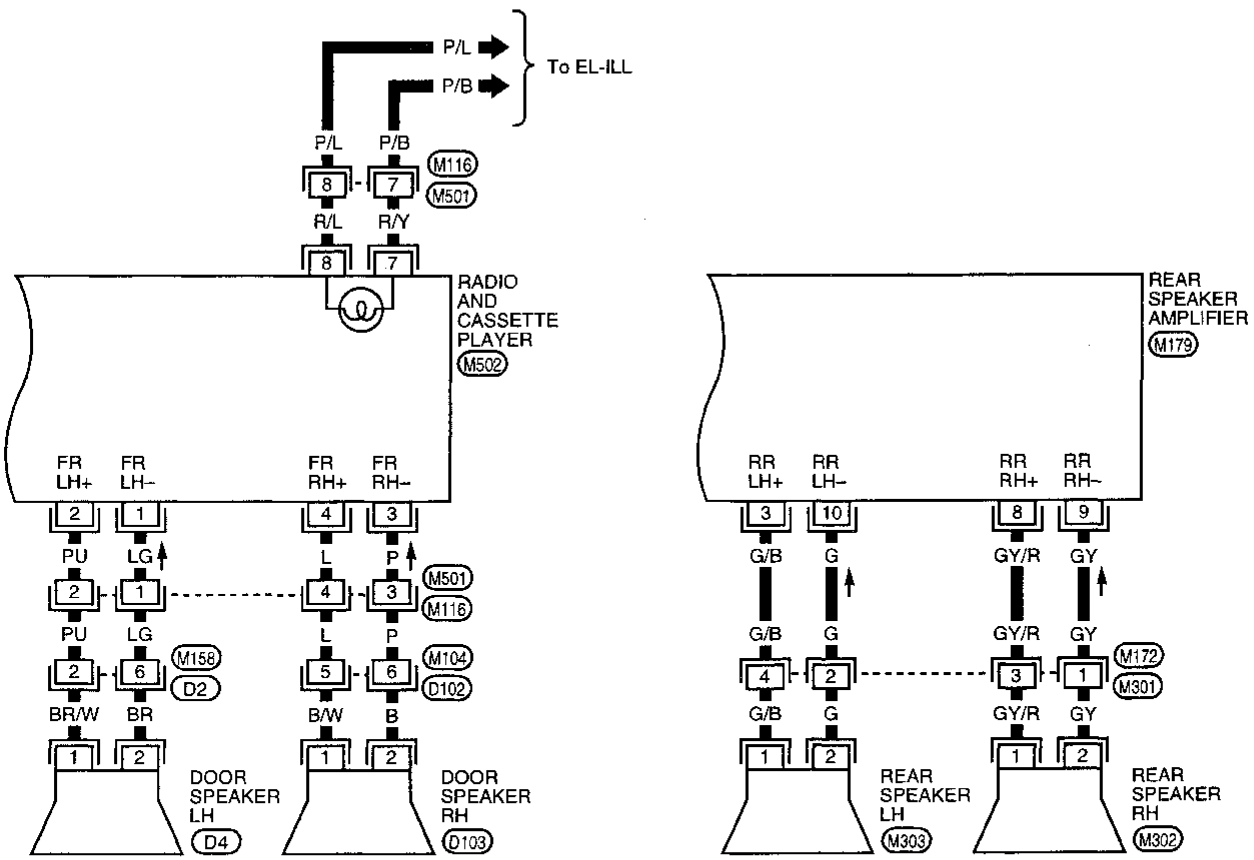

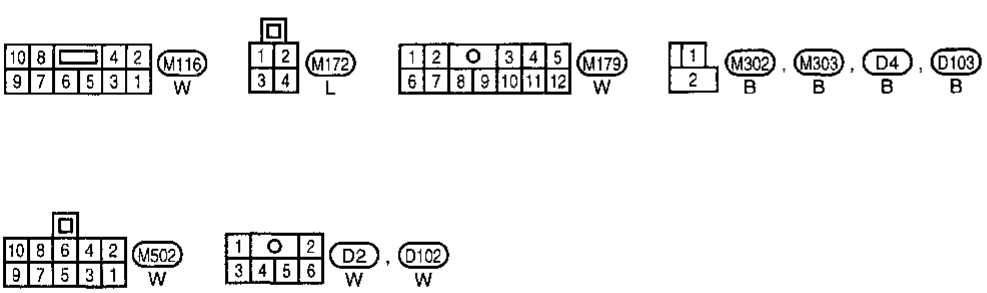

AEL293A-B

Wiring Diagram –AUDIO– (Cont'd)

BASE AUDIO SYSTEM

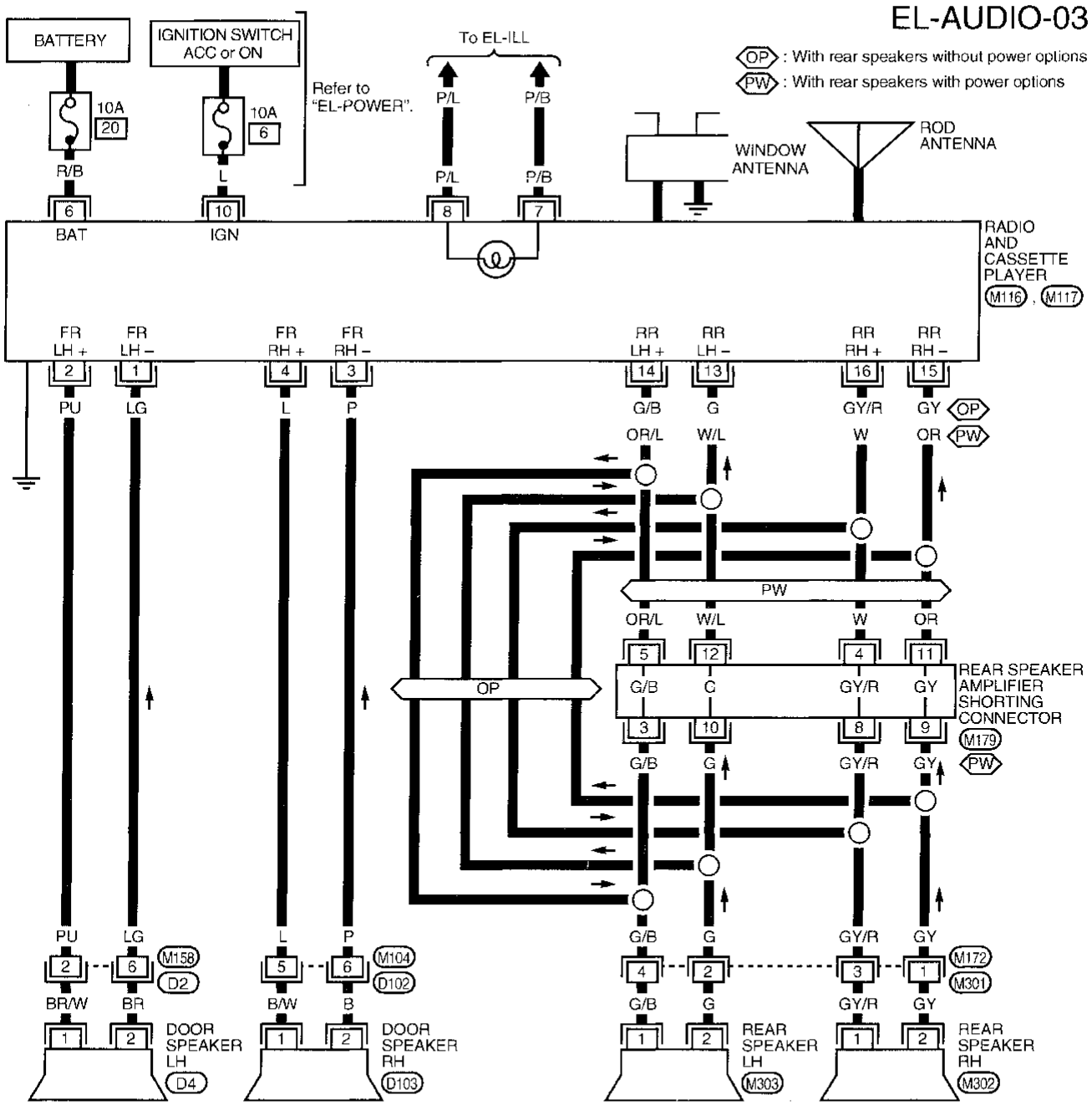

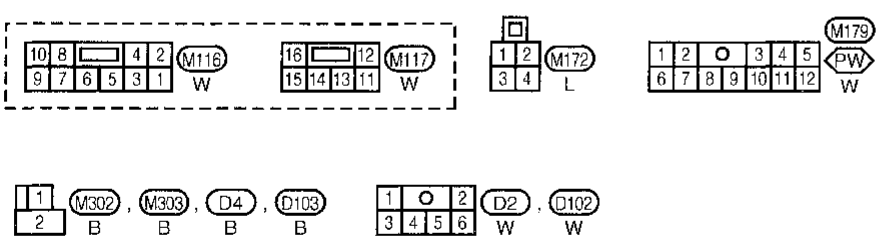

AEL884A

Trouble Diagnoses

Symptom	Possible causes	Repair order
Radio inoperative (no digital display and no sound from speakers).	1. 10A fuse 2. Poor radio case ground 3. Radio	1. Check 10A fuse (No. 6 , located in fuse block). Turn ignition switch ON and verify battery positive voltage is present at terminal ⑩ of radio. 2. Check radio case ground. 3. Remove radio for repair.
Radio controls are operational, but no sound is heard from any speaker.	1. Radio output 2. Radio	1. Check radio output voltages. 2. Remove radio for repair.
Radio presets are lost when ignition switch is turned OFF.	1. 10A fuse 2. Radio	1. Check 10A fuse (No. 20 , located in fuse block) and verify battery positive voltage is present at terminal ⑥ of radio. 2. Remove radio for repair.
Rear speakers are inoperative.	WITH REAR SPEAKER AMPLIFIER 1. Rear speaker amplifier 15A fuse 2. Poor rear amplifier ground 3. Rear speaker amplifier 4. Rear speaker amplifier circuit 5. Radio WITHOUT REAR SPEAKER AMPLIFIER 1. Radio output 2. Radio	WITH REAR SPEAKER AMPLIFIER 1. Check 15A fuse (No. 1 , located in the fuse block) and verify battery positive voltage is present at terminal ② of rear speaker amplifier. 2. Check rear amplifier ground (M177) . 3. Check rear speaker amplifier voltages. 4. Check wires for open or short between radio, rear speaker amplifier and rear speakers. 5. Remove radio for repair. WITHOUT REAR SPEAKER AMPLIFIER 1. Check radio output voltages. 2. Remove radio for repair.
Front speakers are inoperative.	1. Radio output 2. Radio	1. Check radio ouput voltages. 2. Remove radio for repair.
Individual speaker is noisy or inoperative.	1. Speaker 2. Radio/amplifier output 3. Speaker circuit 4. Radio	1. Check speaker. 2. Check radio/amplifier output voltages. 3. Check wires for open or short between radio/amplifier and speaker. 4. Remove radio for repair.
AM stations are weak or noisy (FM stations OK).	1. Antenna 2. Poor radio ground 3. Radio	1. Check antenna. 2. Check radio ground. 3. Remove radio for repair.
FM stations are weak or noisy (AM stations OK).	1. Window antenna 2. Radio	1. Check window antenna. 2. Remove radio for repair.
Radio generates noise in AM and FM modes with engine running.	1. Poor radio ground 2. Loose or missing ground bonding straps 3. Ignition condenser 4. Generator 5. Ignition coil or secondary wiring 6. Radio	1. Check radio ground. 2. Check ground bonding straps. 3. Replace ignition condenser. 4. Check generator. 5. Check ignition coil and secondary wiring. 6. Remove radio for repair.
Radio generates noise in AM and FM modes with accessories on (switch pops and motor noise).	1. Poor radio ground 2. Antenna 3. Accessory ground 4. Faulty accessory	1. Check radio ground. 2. Check antenna. 3. Check accessory ground. 4. Replace accessory.

SPEAKER INSPECTION

1. Disconnect speaker harness connector.
2. Measure the resistance between speaker terminals ① and ②.
- The resistance should be 2-4 Ω
3. Using jumper wires, momentarily connect a 9V battery between speaker terminals ① and ②.
- A momentary hum or pop should be heard

ANTENNA INSPECTION

Using a jumper wire, clip an auxiliary ground between antenna and body.
- If reception improves, check antenna ground (at body surface)
- If reception does not improve, check main feeder cable for short circuit or open circuit.

RADIO AND AMPLIFIER INSPECTION

All voltage inspections are made with:
- Ignition switch ON or ACC
- Radio ON
- Radio and amplifier connected (If either is removed for inspection, supply a ground to the case using a jumper wire.)

RADIO VOLTAGES

Terminal	Voltage (V)	
	Base Audio System	Premium Audio System
1	5 - 7.5	2.5 - 6.5
2	5 - 7.5	2.5 - 6.5
3	5 - 7.5	2.5 - 6.5
4	5 - 7.5	2.5 - 6.5
5	—	—
6	10.8 - 15.6	10.8 - 15.6
7	—	—
8	—	—
9	—	—
10	10.8 - 15.6	10.8 - 15.6
11	—	0
12	—	10.8 - 15.6
13	5 - 7.5	2.5 - 6.5
14	5 - 7.5	2.5 - 6.5
15	5 - 7.5	2.5 - 6.5
16	5 - 7.5	2.5 - 6.5

AMPLIFIER VOLTAGES

Terminal	Voltage (V)
1	10.8 - 15.6
2	10.8 - 15.6
3	4.5 - 8.5
4	2.5 - 6.5
5	2.5 - 6.5
6	—
7	0
8	4.5 - 8.5
9	4.5 - 8.5
10	4.5 - 8.5
11	2.5 - 6.5
12	2.5 - 6.5

Location of Antenna

Fender antenna replacement
- Removal

1. Remove one screw securing fender antenna assembly.
2. Disconnect fender antenna cable connector.
3. Remove the fender antenna assembly.

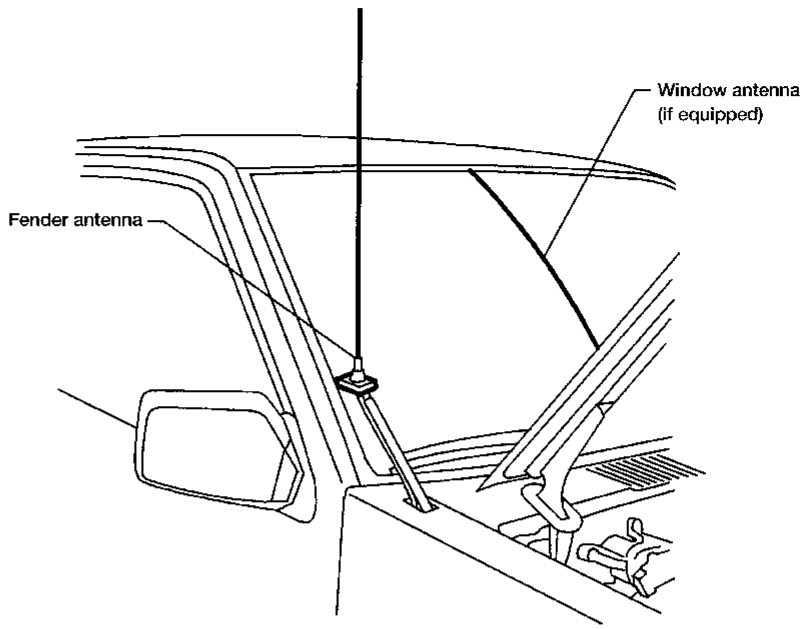

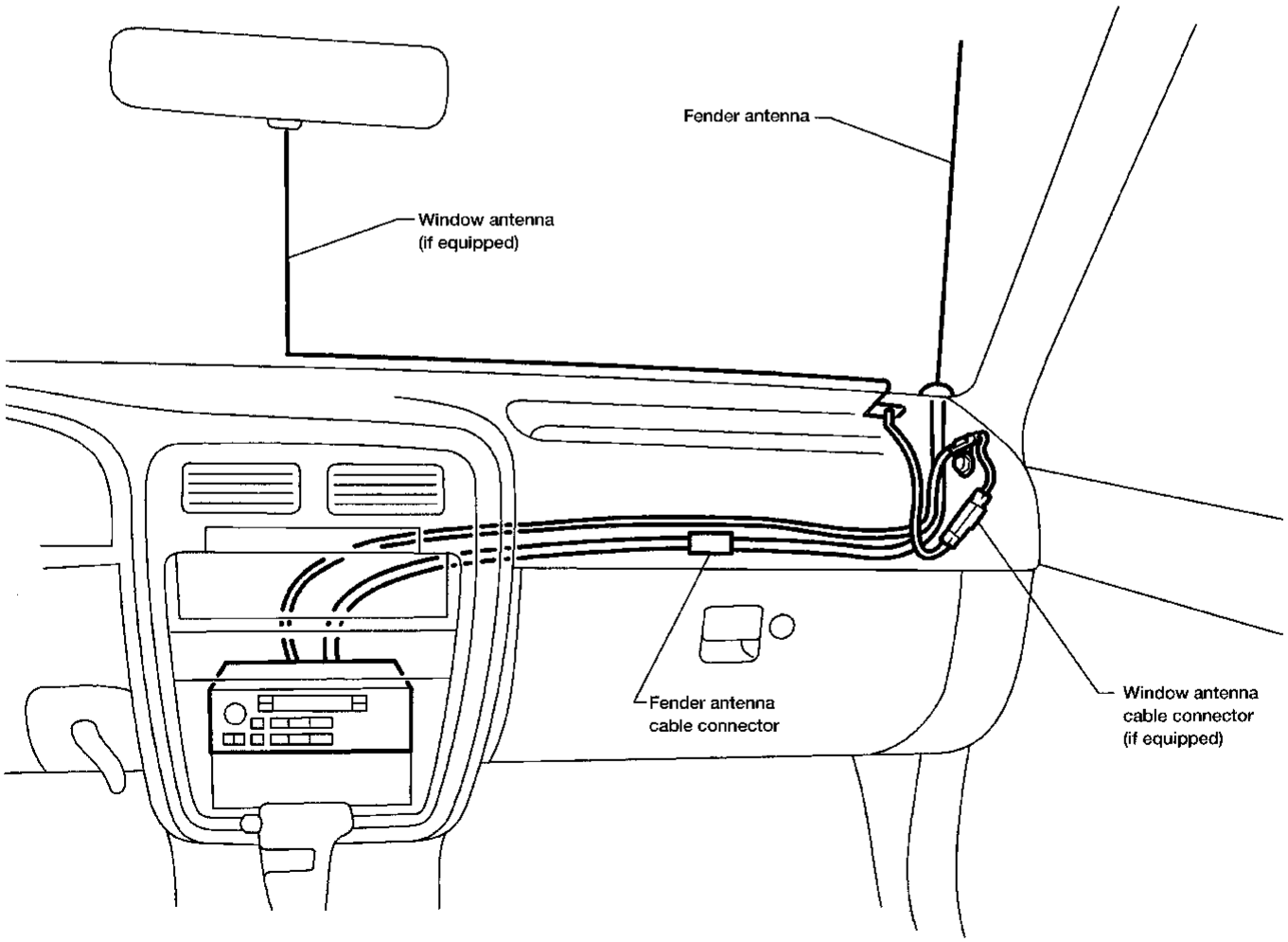

AEL378A

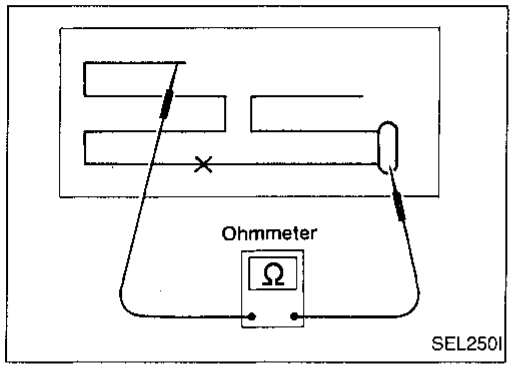

Window Antenna Repair

ELEMENT CHECK

1. Attach probe circuit tester (in ohm range) to each side of antenna terminal.

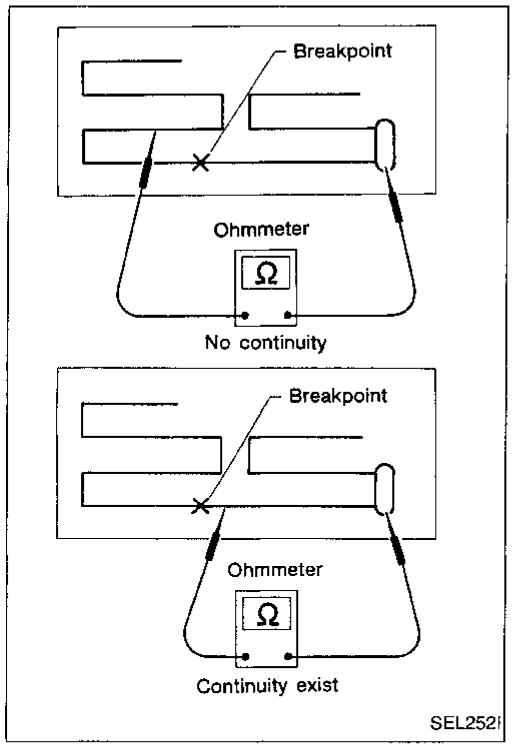

2. If an element is broken, no continuity will exist.

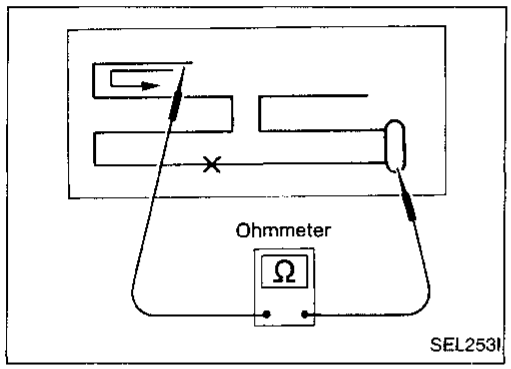

3. To locate a burned out point, move probe along filament. Tester needle swings abruptly at the burned point.

Window Antenna Repair (Cont'd)

ELEMENT REPAIR

Repair equipment

1. Conductive silver composition (Dupont No. 4817 or equivalent)
2. Ruler 30 cm (11.8 in) long
3. Drawing pen
4. Heat gun
5. Alcohol
6. Cloth

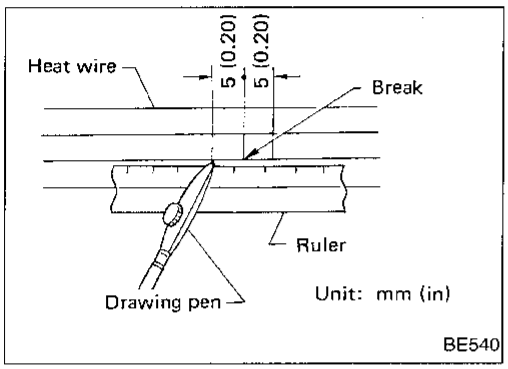

Repairing procedure

1. Wipe broken heat wire and its surrounding area clean with a cloth dampened in alcohol.
2. Apply a small amount of conductive silver composition to tip of drawing pen.

Shake silver composition container before use.

3. Place ruler on glass along broken line. Deposit conductive silver composition on break with drawing pen. Slightly overlap existing heat wire on both sides [preferably 5 mm (0.20 in)] of the break.
4. After repair has been completed, check repaired wire for continuity. This check should be conducted 10 minutes after silver composition is deposited.

Do not touch repaired area while test is being conducted.

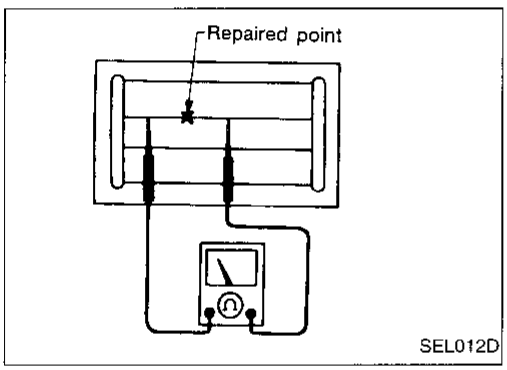

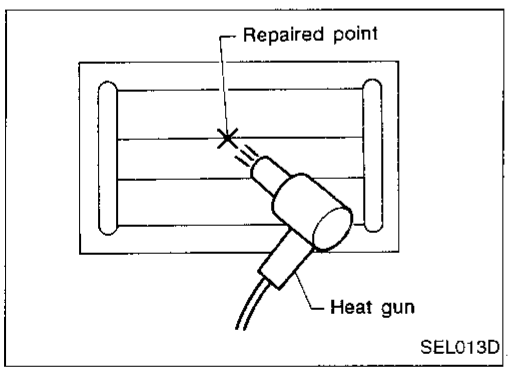

5. Apply a constant stream of hot air directly to the repaired area for approximately 20 minutes with a heat gun. A minimum distance of 3 cm (1.2 in) should be kept between repaired area and hot air outlet. If a heat gun is not available, let the repaired area dry for 24 hours.

Wiring Diagram –MIRROR–

EL-MIRROR-01

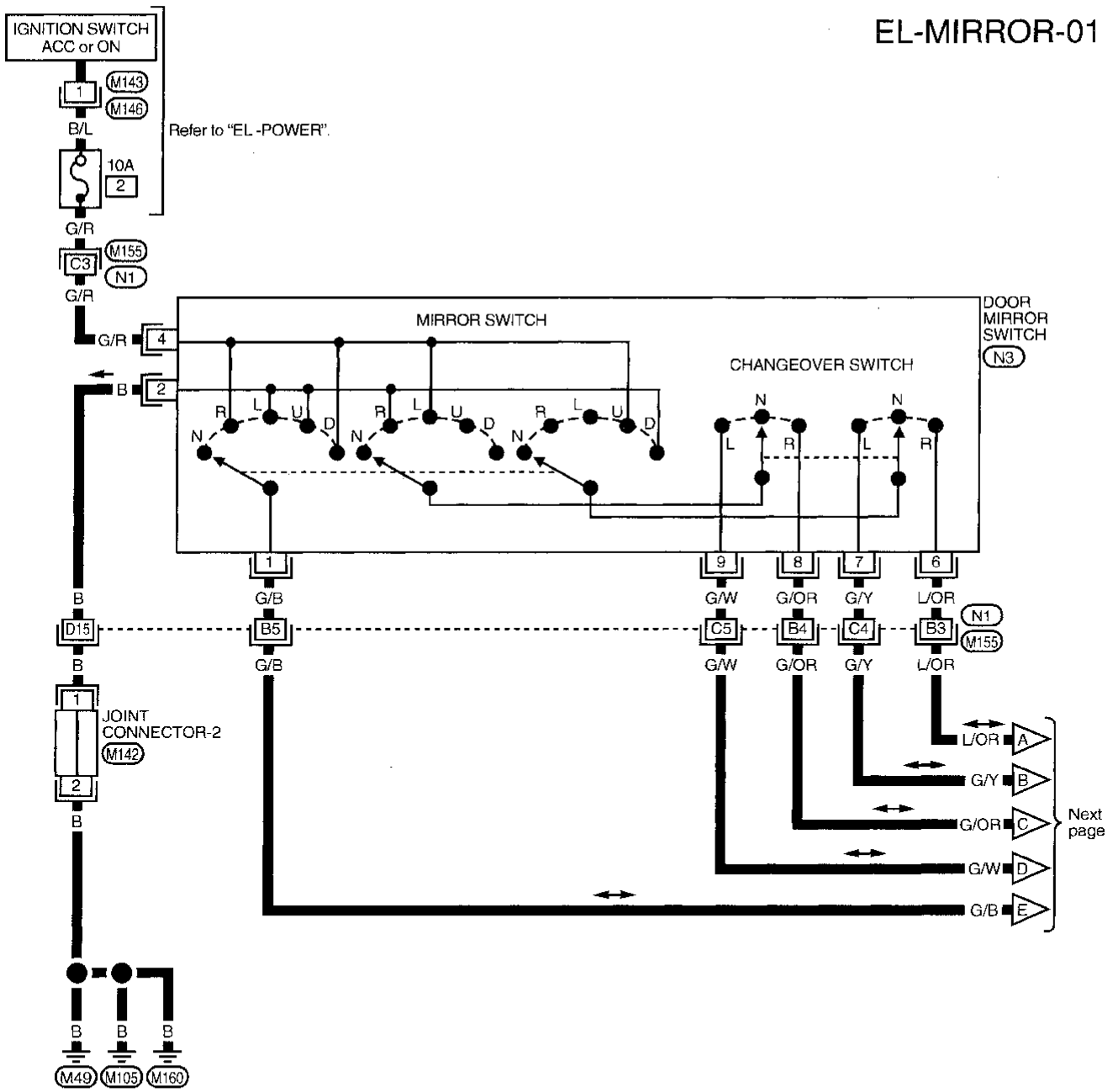

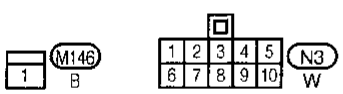

Refer to last page (Foldout page).
M142
M155 , N1

AEL894A

Wiring Diagram –MIRROR– (Cont'd)

EL-MIRROR-02

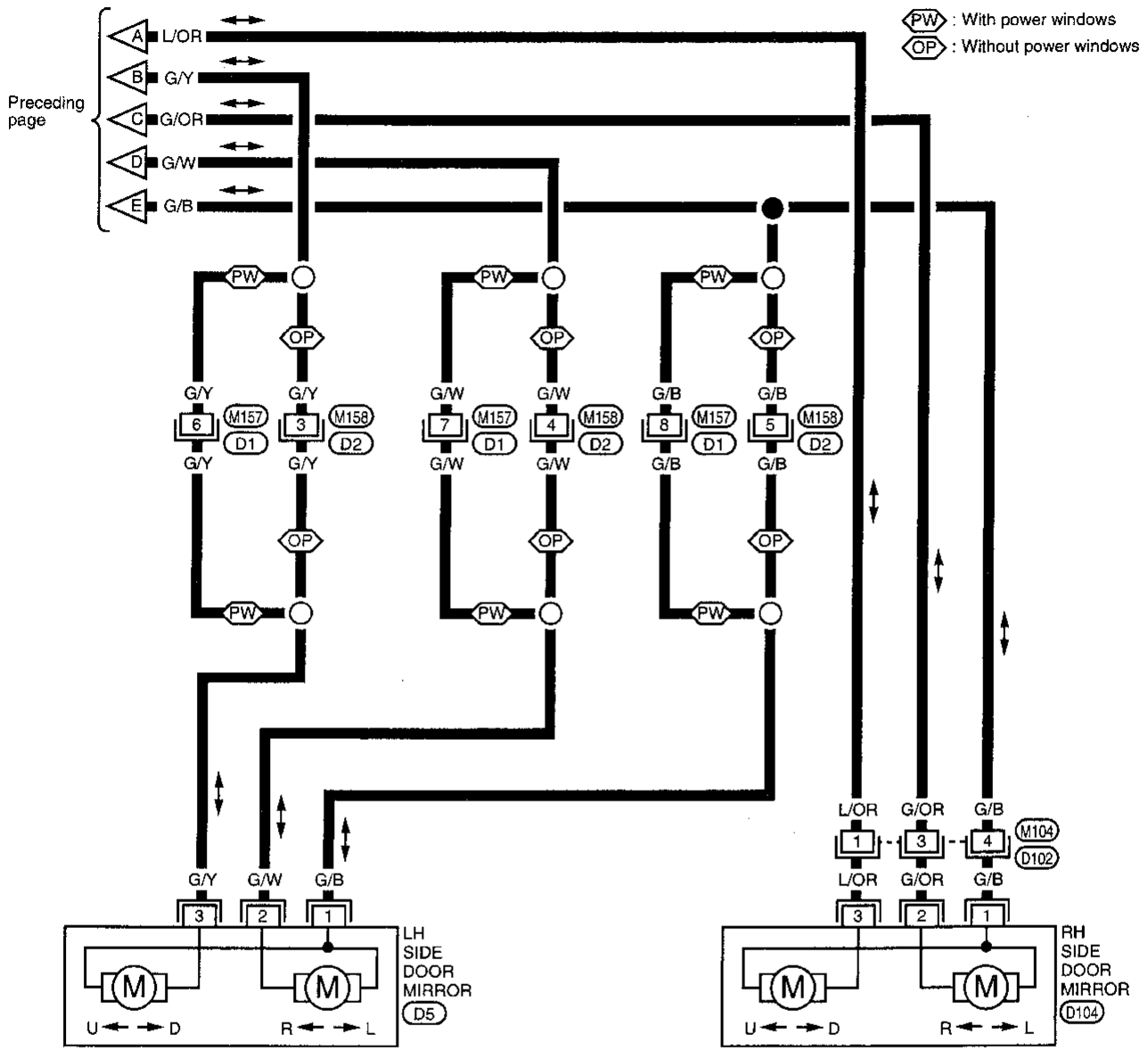

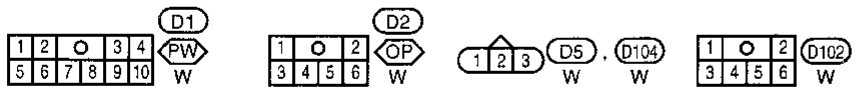

AEL280A-B

Component Parts and Harness Connector Location

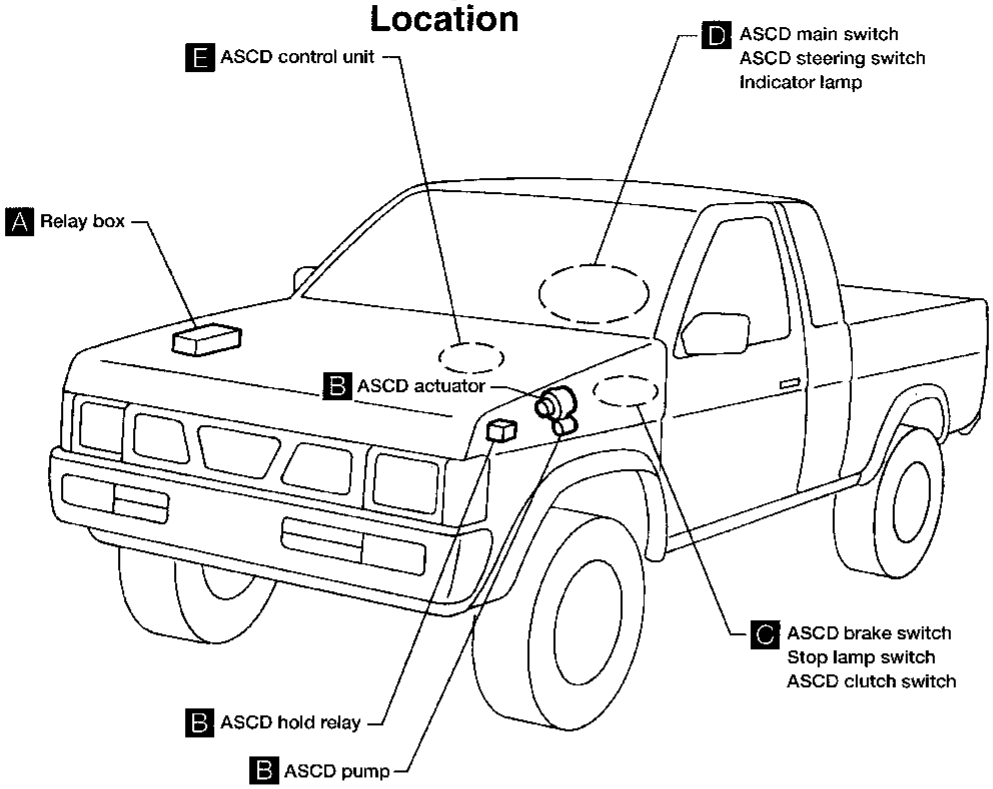

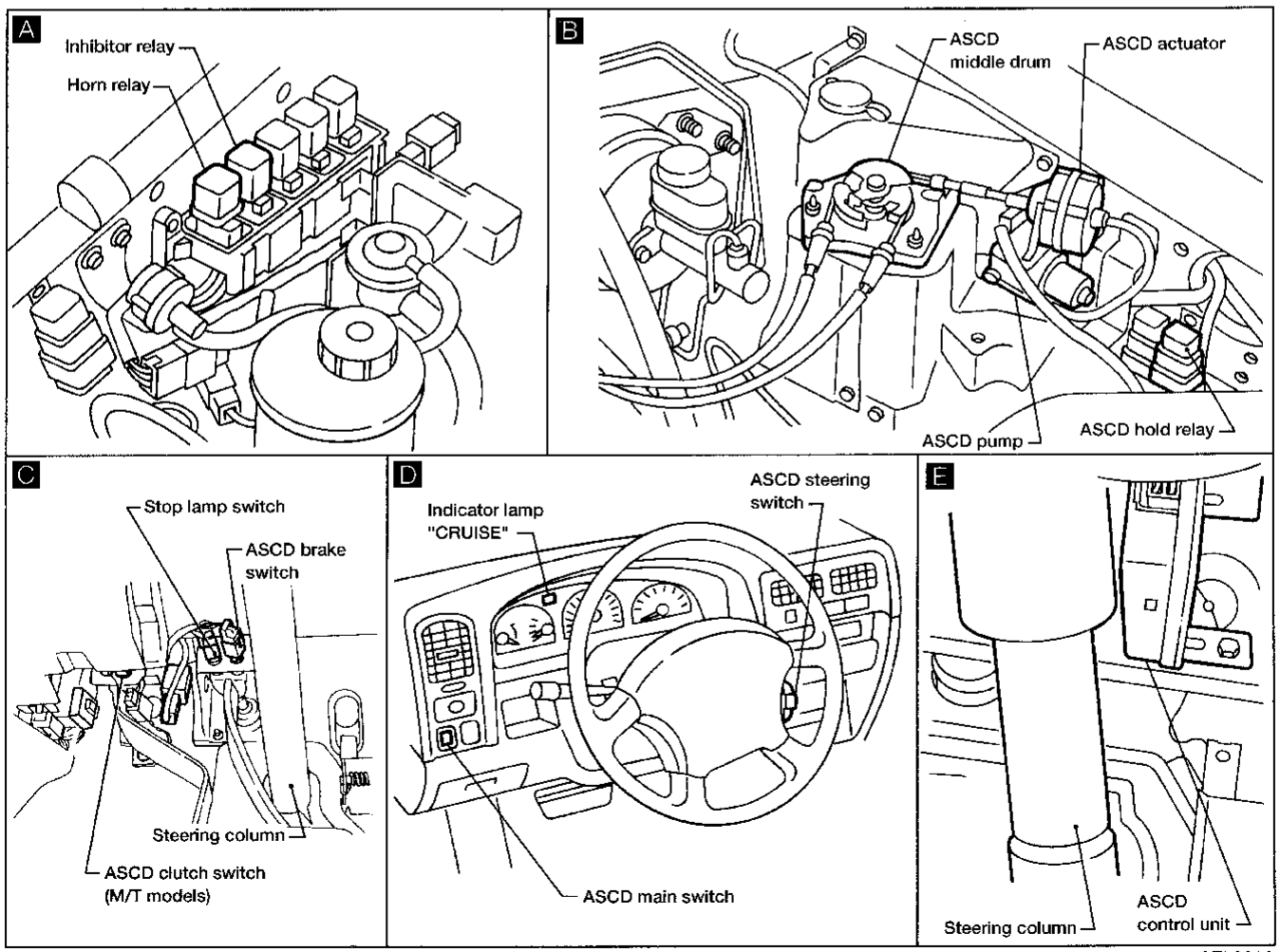

AEL901A

System Description

Refer to Owner's Manual for ASCD operating instructions.
When the ignition switch is in the ON or START position, power is supplied:
- through 10A fuse (No. 11 , located in the fuse block)
- to ASCD brake switch terminal ② (A/T models)
- to ASCD main switch terminal ⑥ and
- to ASCD hold relay terminal ⑤ (M/T models) or
- to ASCD hold relay terminal ③ (A/T models).

With brake pedal released, power remains supplied:
- through ASCD brake switch terminal ① (A/T models) and
- to ASCD hold relay terminal ⑥ (A/T models).

When ASCD main switch is in the ON position, power is supplied:
- from terminal ② of the ASCD main switch
- to ASCD control unit terminal ④ and
- from terminal ① of the ASCD main switch
- to ASCD hold relay terminal ② (M/T models) or
- to ASCD hold relay terminal ① (A/T models).

Ground is supplied:
- to ASCD hold relay terminal ① (M/T models) or
- to ASCD hold relay terminal ② (A/T models)
- through body grounds M49 , M105 and M160 .

With power and ground supplied, the ASCD hold relay is activated, and power is supplied:
- from terminal ③ of the ASCD hold relay (M/T models) or
- from terminal ⑤ of the ASCD hold relay (A/T models)
- to ASCD main switch terminal ②,
- to ASCD control unit terminal ④ and
- to ASCD clutch switch terminal ① (M/T models) or
- from terminal ⑦ of the ASCD hold relay (A/T models)
- to inhibitor relay terminal ③ (A/T models).

When the ASCD main switch is released to the N (neutral) position, power remains supplied:
- to ASCD hold relay terminal ② (M/T models) or
- to ASCD hold relay terminal ① (A/T models)
- from ASCD main switch terminal ①.
- Ground is supplied:
- to ASCD control unit terminal ③
- through body grounds M49 , M105 and M160 .

Inputs

At this point, the system is ready to activate or deactivate, based on inputs from the following:
- speedometer in the combination meter
- stop lamp switch
- ASCD steering switch
- inhibitor relay (A/T models)
- ASCD clutch switch (M/T models) and
- ASCD brake switch.

A vehicle speed input is supplied:
- to ASCD control unit terminal ⑦
- from terminal ⑦ of the combination meter.

Power is supplied at all times:
- to stop lamp switch terminal ①
- through 10A fuse (No. 19 , located in the fuse block).

When the brake pedal is depressed, power is supplied:
- from terminal ② of the stop lamp switch
- to ASCD control unit terminal ⑪.

Power is supplied at all times:
- through 10A fuse (No. 17 , located in the fuse block)
- to horn relay terminal ②
- through terminal ① of the horn relay
- to ASCD steering switch terminal ㉑.

System Description (Cont'd)

When the SET/COAST button is depressed, power is supplied:
- from terminal ㉒ of the ASCD steering switch
- to ASCD control unit terminal ②.

When the RESUME/ACCEL button is depressed, power is supplied:
- from terminal ㉓ of the ASCD steering switch
- to ASCD control unit terminal ①.

When the CANCEL button is depressed, power is supplied:
- to ASCD control unit terminals ① and ②.

When the system is activated, power is supplied:
- to ASCD control unit terminal ⑤.

Power is interrupted when:
- the shift lever is placed in P or N (A/T models)
- the clutch pedal is depressed (M/T models) or
- the brake pedal is depressed.

Outputs

The ASCD pump controls the throttle drum via the ASCD wire based on inputs from the ASCD control unit.
The ASCD pump consists of a vacuum motor, an air valve, and a release valve.
Power is supplied:
- from terminal ⑧ of the ASCD control unit
- to ASCD pump terminal ②.

Ground is supplied to the vacuum motor:
- from terminal ⑨ of the ASCD control unit
- to ASCD pump terminal ③.

Ground is supplied to the air valve:
- from terminal ⑩ of the ASCD control unit
- to ASCD pump terminal ①.

Ground is supplied to the release valve:
- from terminal ⑭ of the ASCD control unit
- to ASCD pump terminal ④.

When the system is activated, power is supplied:
- from terminal ⑬ of the ASCD control unit
- to combination meter terminal ⑫.

Ground is supplied:
- to combination meter terminal ㊷
- through body grounds M49, M105 and M160.

With power and ground supplied, the CRUISE indicator illuminates.
When vehicle speed is approximately 8 km/h (5 MPH) below set speed on A/T models, ground is supplied:
- to terminal ② of the solenoid valve unit
- from ASCD control unit terminal ⑫.

When this occurs, the overdrive is canceled.
When vehicle speed reaches approximately 3 km/h (2 MPH) above set speed, overdrive is reactivated.

Schematic

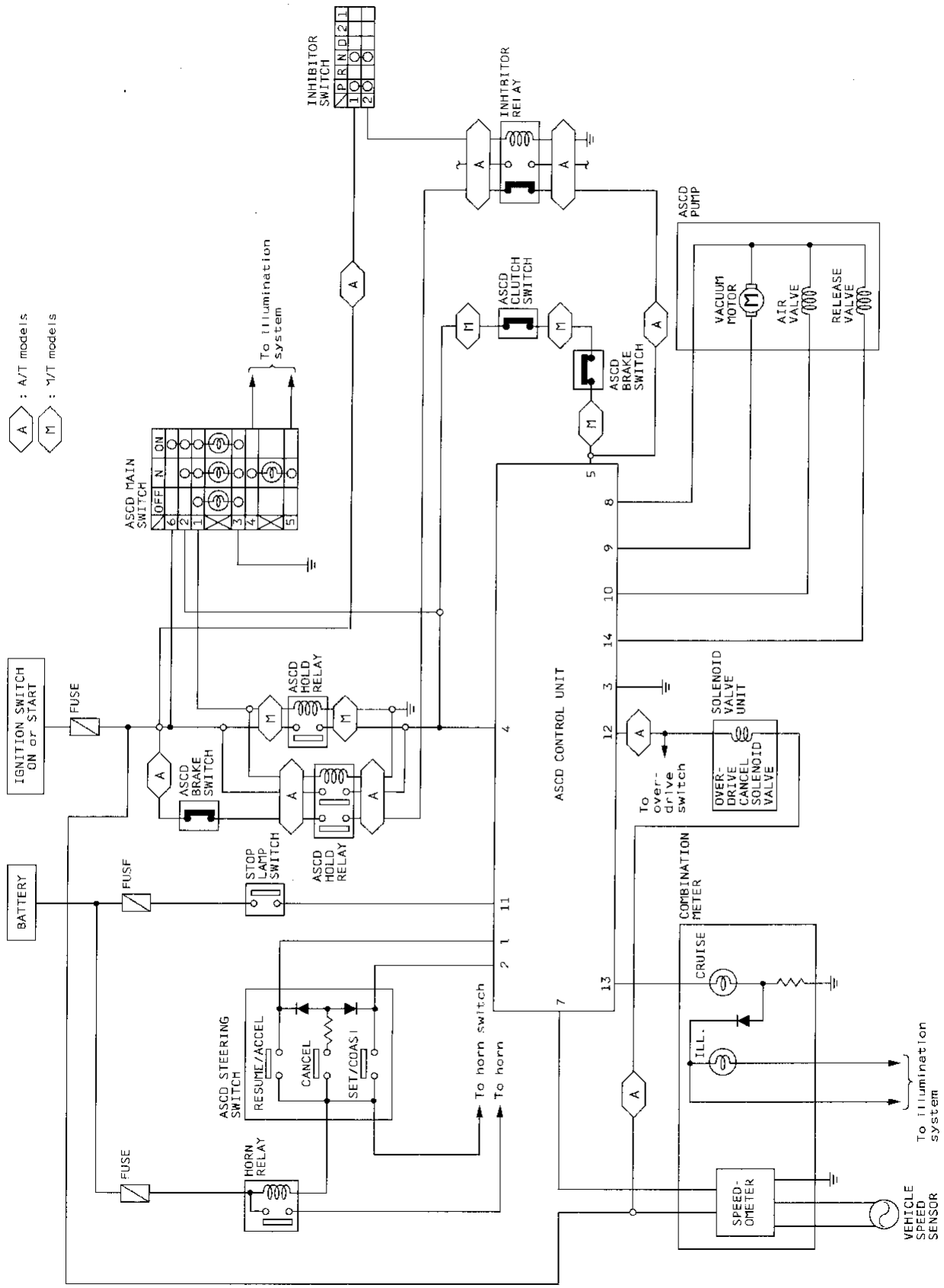

AEL885A

Wiring Diagram –ASCD–

EL-ASCD-01

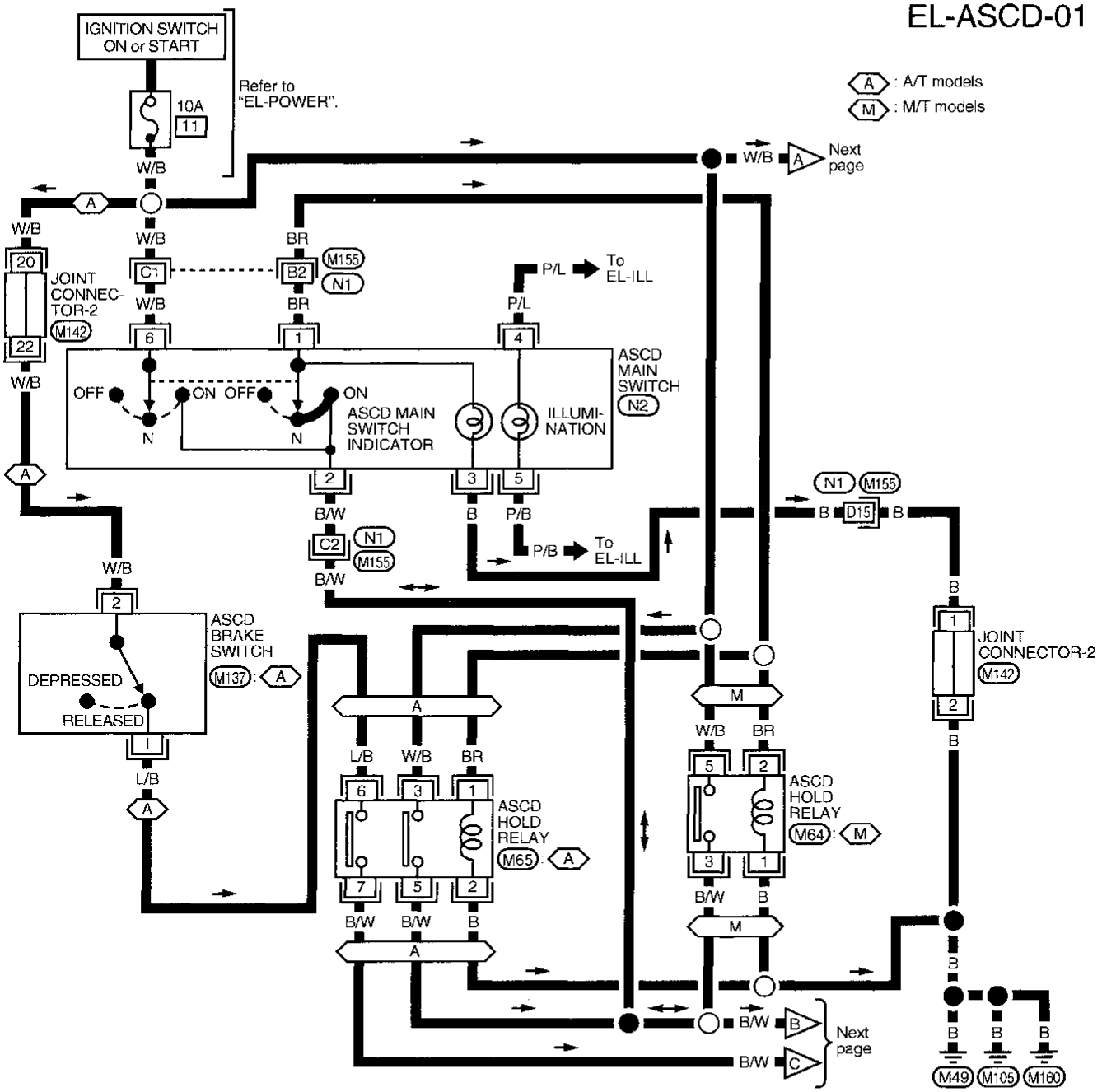

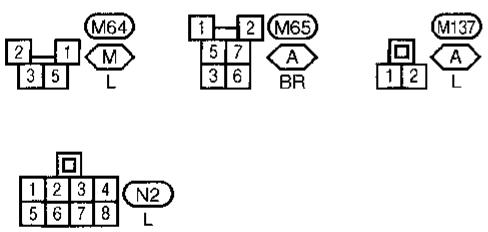

Refer to last page (Foldout page).
M142
M155 , N1

AEL886A

Wiring Diagram –ASCD– (Cont'd)

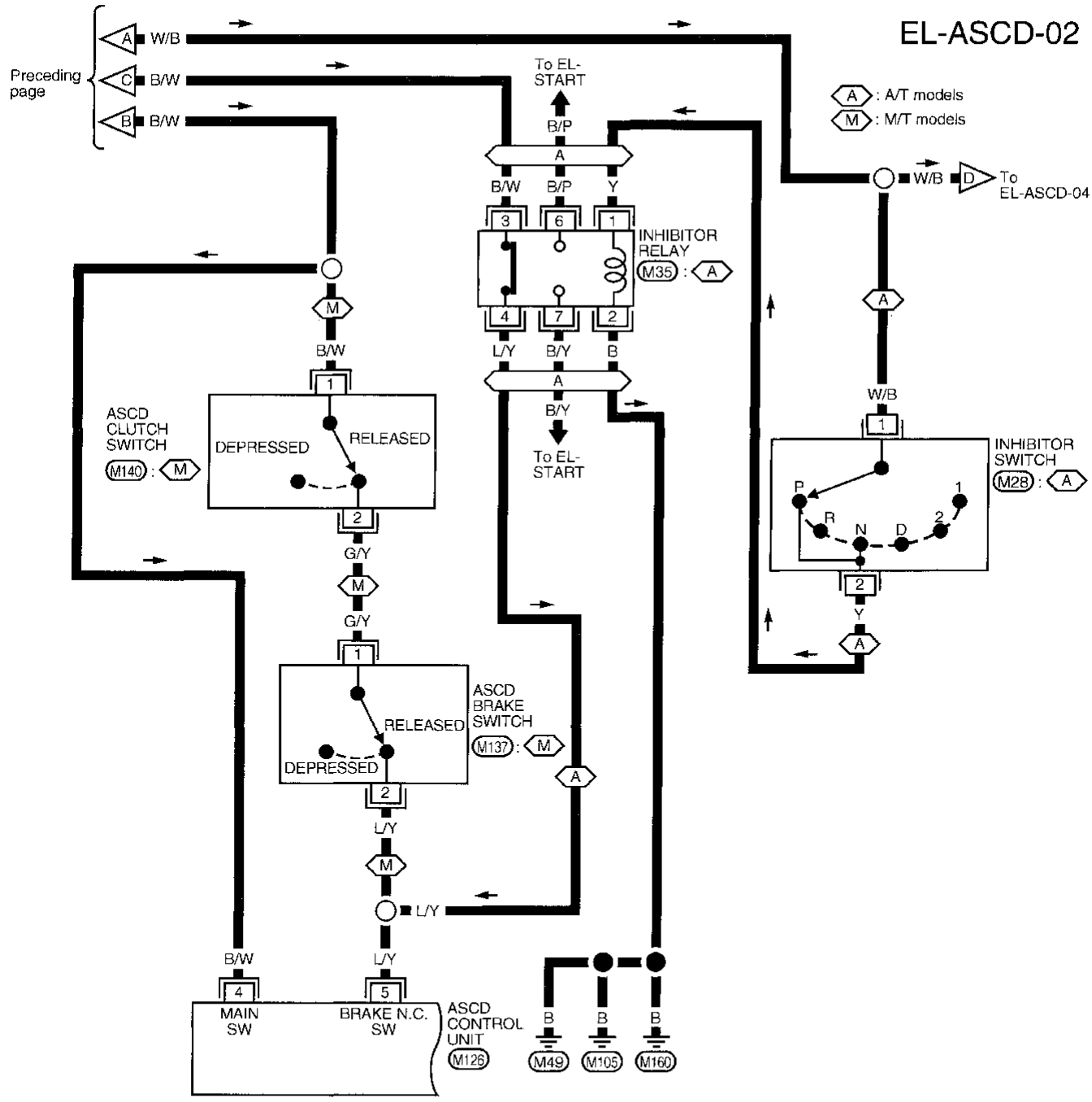

AEL887A

Wiring Diagram –ASCD– (Cont'd)

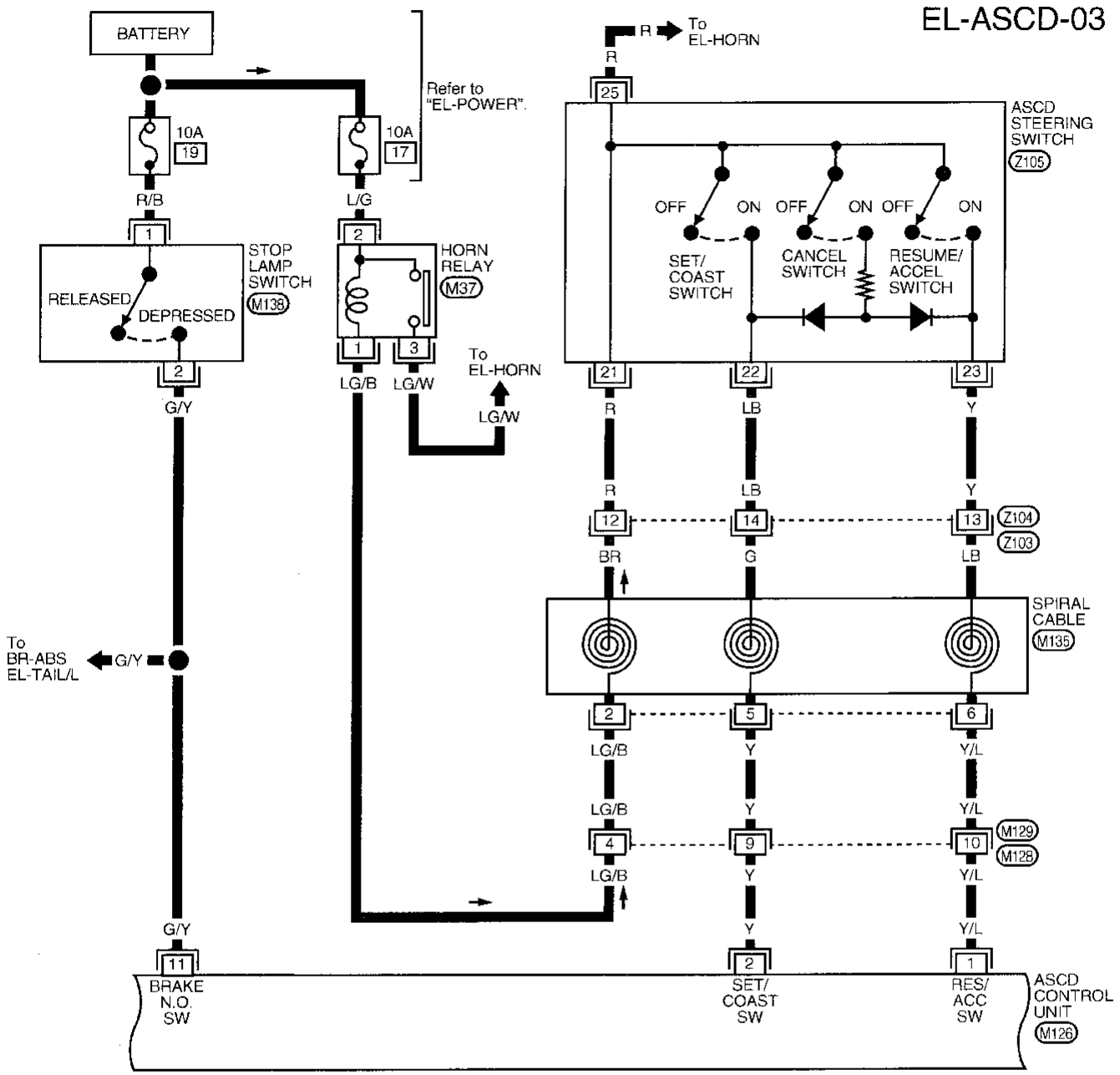

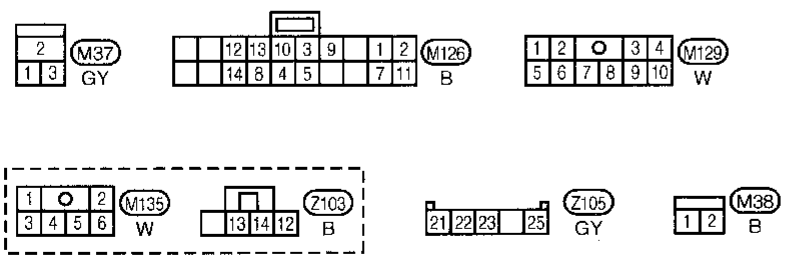

AEL899A

Wiring Diagram –ASCD– (Cont'd)

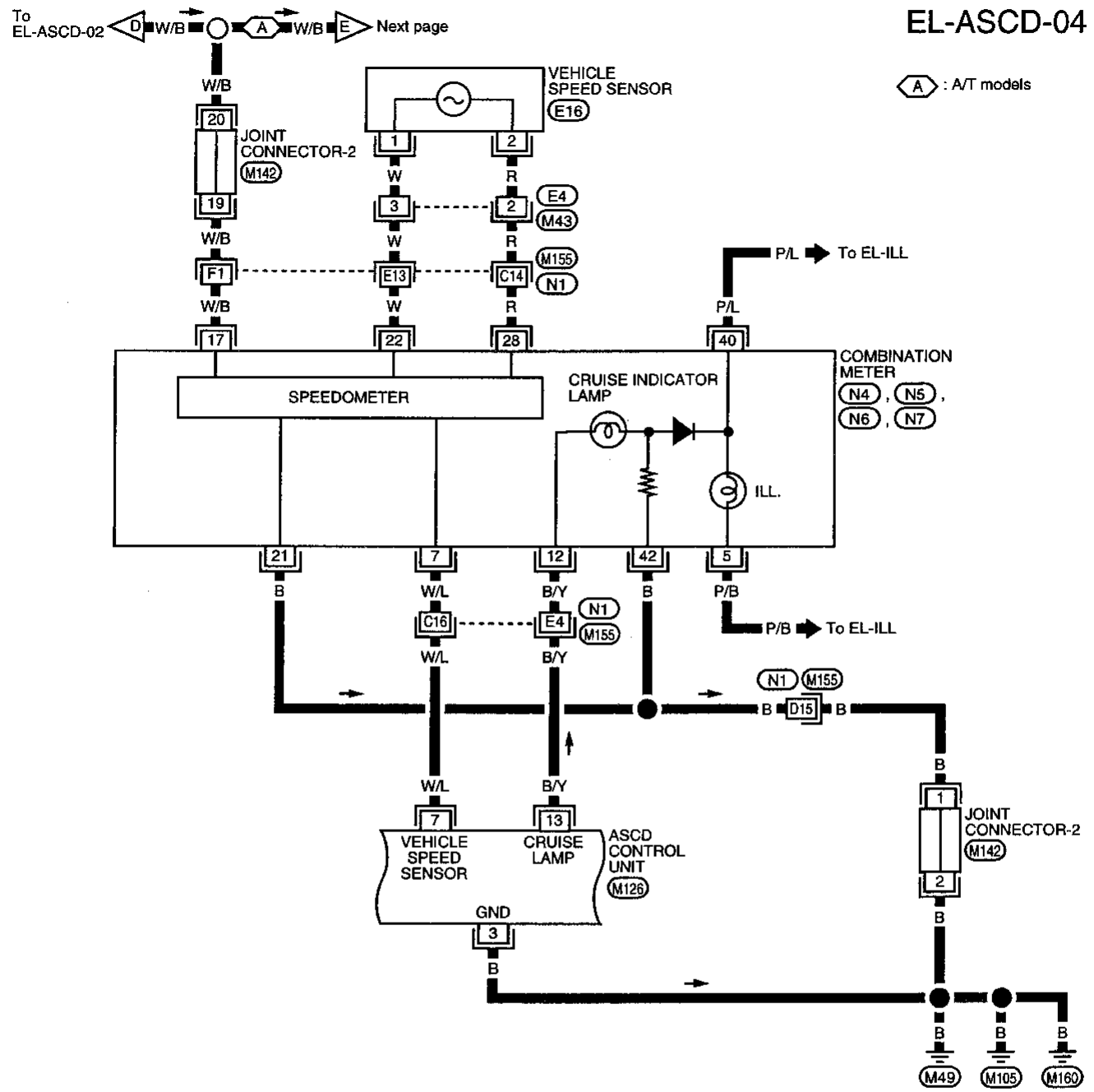

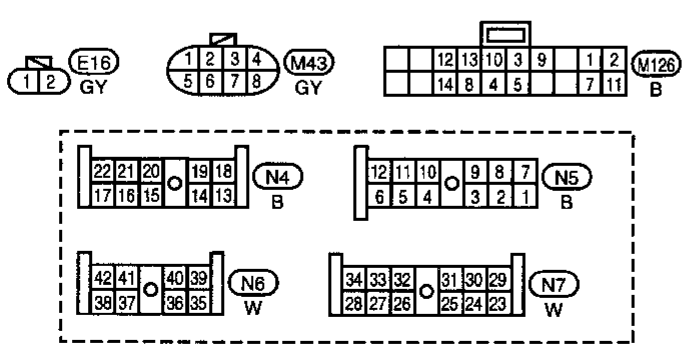

Refer to last page (Foldout page).
M142
M155, N1

AEL291A-D

Wiring Diagram –ASCD– (Cont'd)

EL-ASCD-05

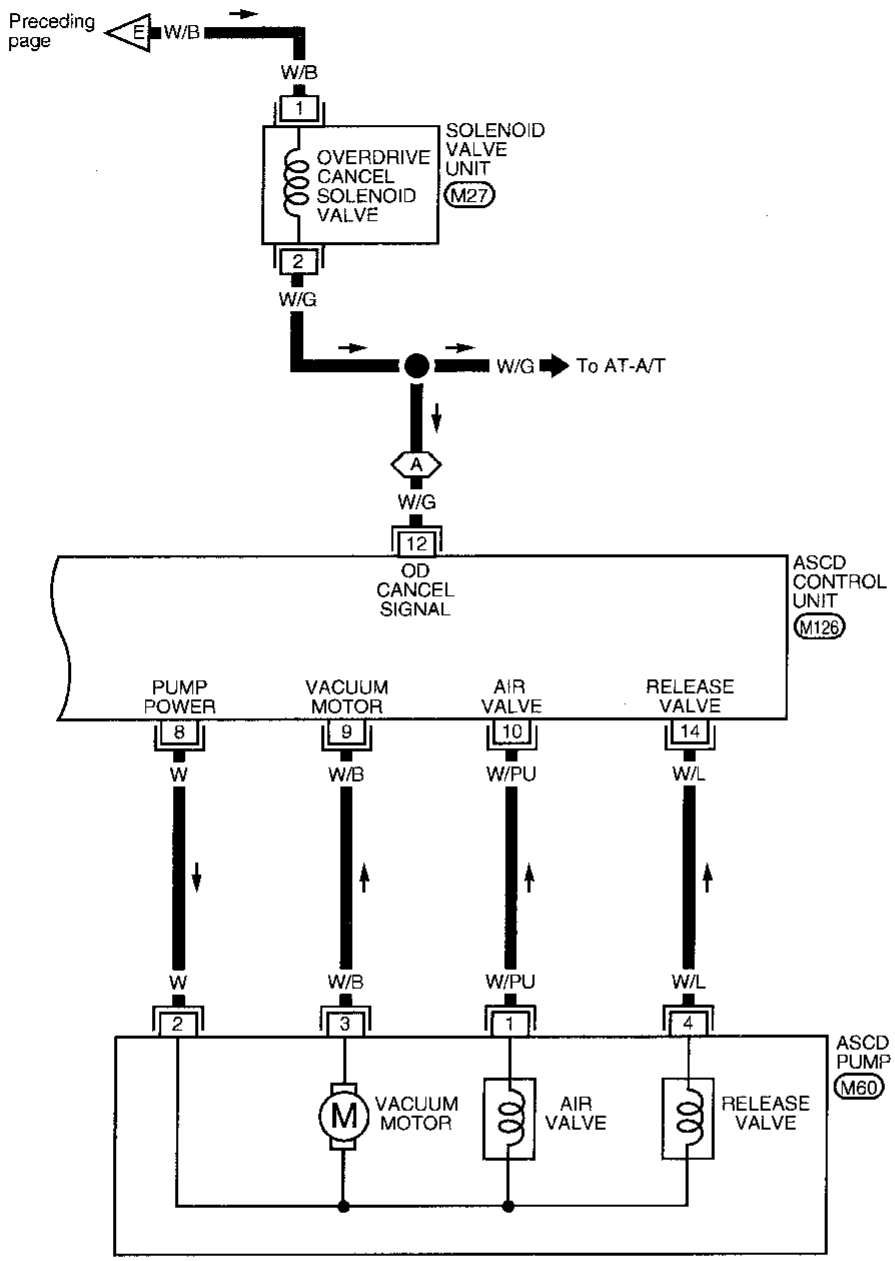

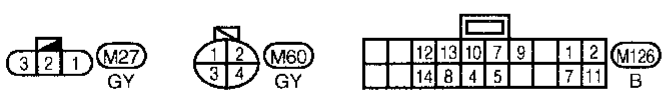

AEL888A

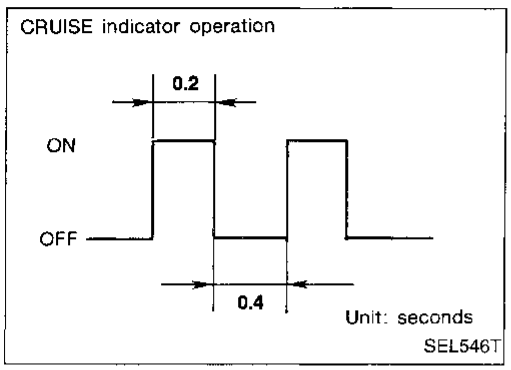

Trouble Diagnoses

FAIL-SAFE SYSTEM

When the fail-safe system senses a malfunction, it deactivates ASCD operation. The CRUISE indicator in the combination meter will then flash.

Malfunction detection conditions

Detection conditions	ASCD operation during malfunction detection
● ASCD steering (RESUME/ACCEL, CANCEL, SET/COAST) switch is stuck. ● Vacuum motor ground circuit or power circuit is open or shorted. ● Air valve ground circuit or power circuit is open or shorted. ● Release valve ground circuit or power circuit is open or shorted. ● Vehicle speed sensor is faulty. ● ASCD control unit internal circuit is malfunctioning.	● ASCD is deactivated. ● Vehicle speed memory is canceled.
● ASCD brake switch or stop lamp switch is faulty.	● ASCD is deactivated. ● Vehicle speed memory is not canceled.

Trouble Diagnoses (Cont'd)

Fail-safe system check

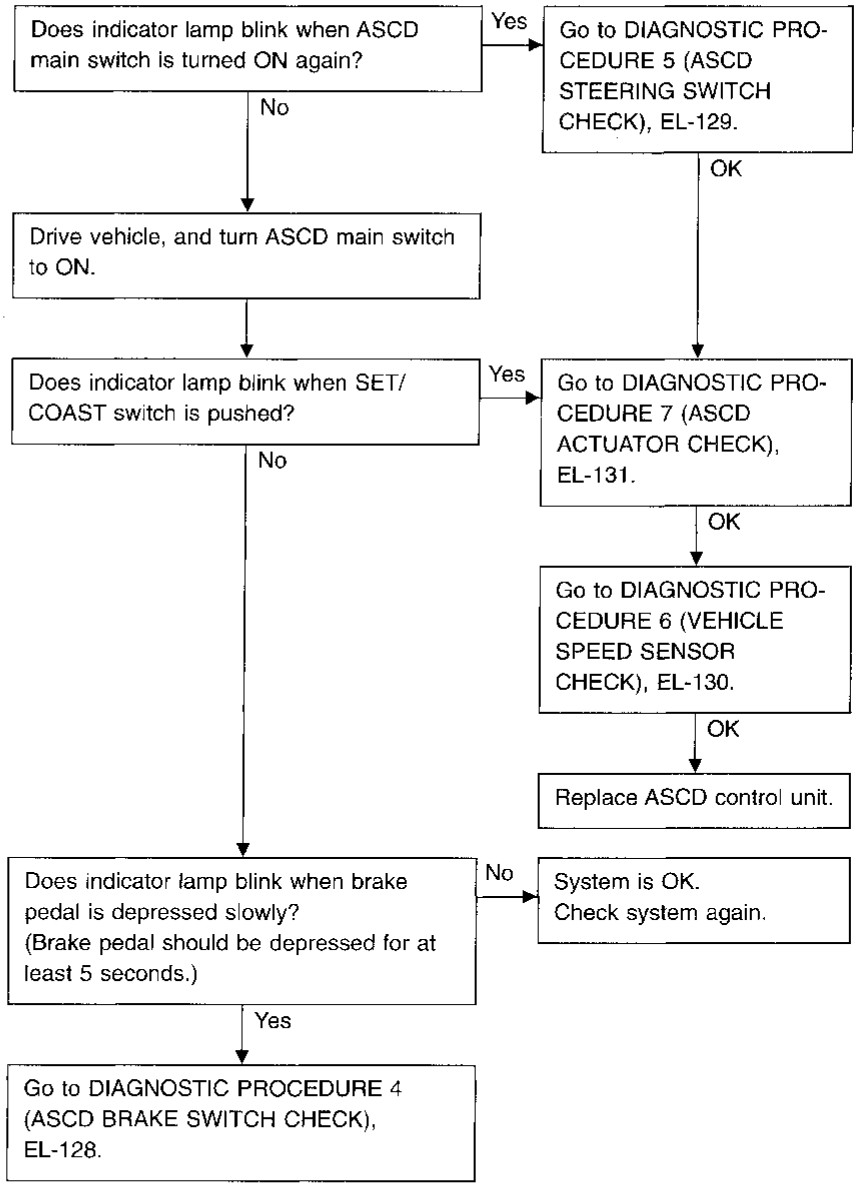

Trouble Diagnoses (Cont'd)

SYMPTOM CHART

PROCEDURE	—	Diagnostic procedure							
REFERENCE PAGE	EL-124	EL-126	EL-126	EL-127	EL-128	EL-129	EL-130	EL-131	EL-132
SYMPTOM	Fail-safe system check	DIAGNOSTIC PROCEDURE 1 (POWER SUPPLY AND GROUND CIRCUIT CHECK)	DIAGNOSTIC PROCEDURE 2 (ASCD MAIN SWITCH CHECK)	DIAGNOSTIC PROCEDURE 3 (ASCD HOLD RELAY CHECK)	DIAGNOSTIC PROCEDURE 4 (ASCD CLUTCH AND BRAKE SWITCH CHECK)	DIAGNOSTIC PROCEDURE 5 (ASCD STEERING SWITCH CHECK)	DIAGNOSTIC PROCEDURE 6 (VEHICLE SPEED SENSOR CHECK)	DIAGNOSTIC PROCEDURE 7 (ASCD PUMP CIRCUIT CHECK)	DIAGNOSTIC PROCEDURE 8 (ASCD ACTUATOR/PUMP CHECK)
ASCD cannot be set. ("CRUISE" indicator lamp does not blink.)		X	X	X		X	X		
ASCD cannot be set. ("CRUISE" indicator lamp blinks. *1)	X				X	X	X	X	
Vehicle speed does not decrease after SET/COAST switch has been pressed.						X			X
Vehicle speed does not return to the set speed after RESUME/ACCEL switch has been pressed. *2						X			X
Vehicle speed does not increase after RESUME/ACCEL switch has been pressed.						X			X
System is not released after CANCEL switch (steering) has been pressed.						X			X
Large difference between set speed and actual vehicle speed.									X
Deceleration is greatest immediately after ASCD has been set.									X

*1: It indicates that system is in fail-safe.

*2: If vehicle speed is greater than 48 km/h (30 MPH) after system has been released, pressing RESUME/ACCEL switch returns vehicle speed to the set speed previously achieved. However, doing so when the ASCD main switch is turned to OFF vehicle speed will not return to the set speed since the memory is canceled.

Trouble Diagnoses (Cont'd)

DIAGNOSTIC PROCEDURE 1

(POWER SUPPLY AND GROUND CIRCUIT CHECK)

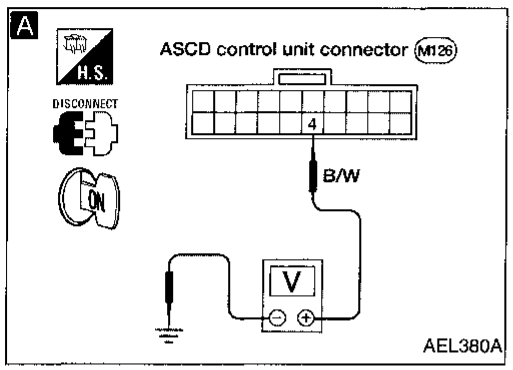

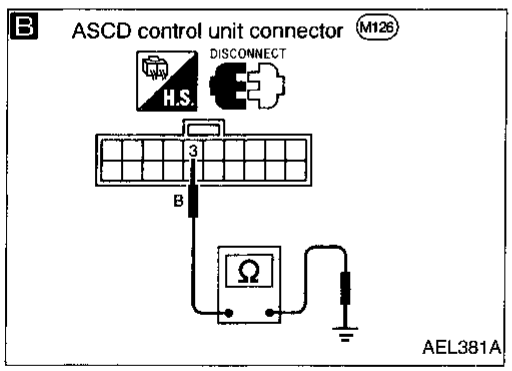

1. Turn ignition switch ON.
2. Turn ASCD main switch ON to make sure indicators illuminate.

NG → Go to DIAGNOSTIC PROCEDURE 2 (ASCD MAIN SWITCH CHECK).

OK ↓

A

CHECK POWER SUPPLY CIRCUIT FOR ASCD CONTROL UNIT.

1. Disconnect ASCD control unit connector.
2. Turn ignition switch ON.
3. Turn ASCD main switch ON.
4. Check voltage between ASCD control unit connector terminal ④ and body ground.

Battery voltage should exist.

NG → Go to DIAGNOSTIC PROCEDURE 3 (ASCD HOLD RELAY CIRCUIT CHECK), EL-127.

OK ↓

B

CHECK GROUND CIRCUIT FOR ASCD CONTROL UNIT.

Check continuity between ASCD control unit harness terminal ③ and body ground.

NG → Repair harness.

OK ↓

Go to next procedure.

DIAGNOSTIC PROCEDURE 2

(ASCD MAIN SWITCH CHECK)

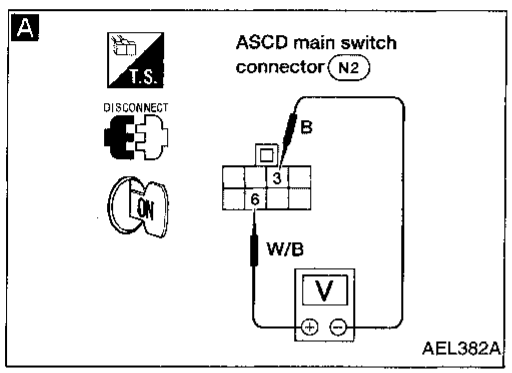

A

CHECK POWER SUPPLY FOR ASCD MAIN SWITCH.

1. Disconnect main switch connector.
2. Measure voltage between main switch harness terminals ⑥ and ③.

Battery voltage should exist.

NG → Check the following:
- 10A fuse (No. 11, located in the fuse block)
- Harness for open or short between fuse and ASCD main switch
- Ground circuit for ASCD main switch

OK ↓

Check ASCD main switch. Refer to EL-134.

NG → Replace ASCD main switch.

OK ↓

Go to next procedure.

Trouble Diagnoses (Cont'd)

DIAGNOSTIC PROCEDURE 3

(ASCD HOLD RELAY CIRCUIT CHECK)

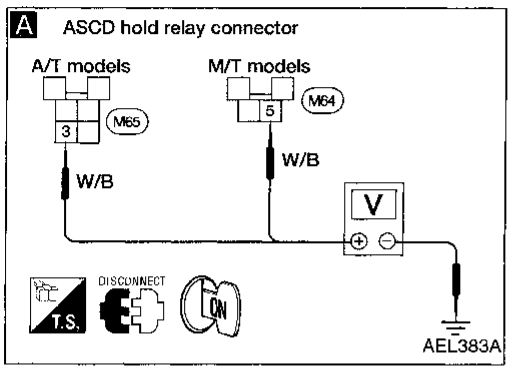

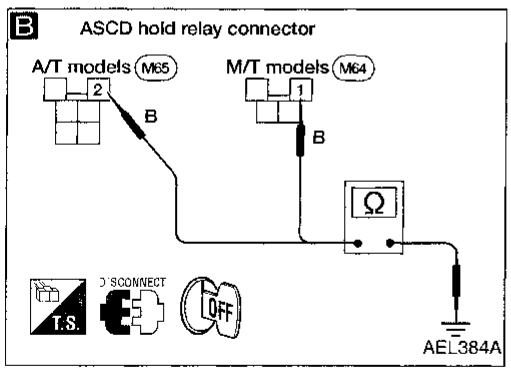

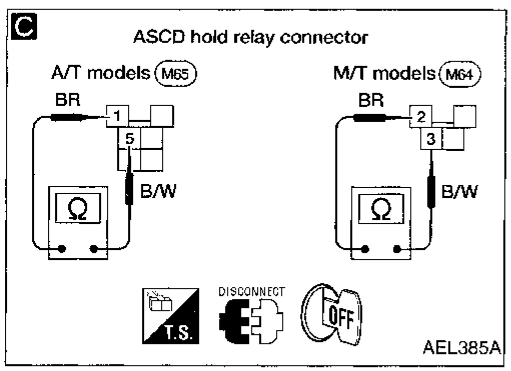

A

CHECK POWER SUPPLY CIRCUIT FOR ASCD HOLD RELAY.
1. Disconnect ASCD hold relay.
2. Do approx. 12 volts exist between ASCD hold relay harness terminal ⑤ (M/T models) or ③ (A/T models) and body ground?

No → Check harness for open or short between fuse and ASCD hold relay.

Yes ↓

B

CHECK GROUND CIRCUIT FOR ASCD HOLD RELAY.
Does continuity exist between ASCD hold relay harness terminal ① (M/T models) or ② (A/T models) and body ground?

No → Repair harness.

Yes ↓

C

CHECK ASCD HOLD RELAY CIRCUIT.
Does continuity exist between ASCD hold relay harness terminals ② and ③ (M/T models) or ① and ⑤ (A/T models)?

Yes → Check ASCD hold relay.

No ↓

CHECK ASCD MAIN SWITCH.
Refer to EL-134.

NG → Replace ASCD main switch.

OK ↓

Go to next procedure.

Trouble Diagnoses (Cont'd)

DIAGNOSTIC PROCEDURE 4

(ASCD CLUTCH AND BRAKE SWITCH CHECK)

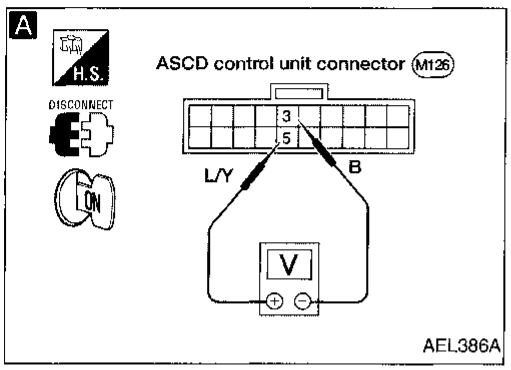

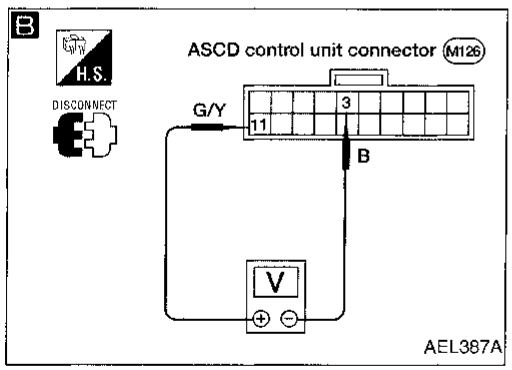

A

CHECK CUT-OFF CIRCUIT FOR ASCD CONTROL UNIT.

1. Disconnect ASCD control unit connector.
2. Turn ignition switch ON.
3. Turn ASCD main switch ON.
4. Measure voltage between ASCD control unit connector terminals ⑤ and ③.

When brake pedal or clutch pedal (M/T) is depressed or A/T selector lever is in ("N") or ("P") position:
Approx. 0V

When both brake pedal and clutch pedal (M/T) are released or A/T selector lever is in any position other than ("N") or ("P"):
Battery voltage should exist.

NG →

Check the following:
- ASCD brake switch
  Refer to EL-134.
- ASCD clutch switch (M/T models)
  Refer to EL-134.
- Inhibitor switch (A/T models)
  Refer to EL-134.
- ASCD hold relay
  Refer to EL-27.
- Inhibitor relay (A/T models)
  Refer to EL-27.
- Harness for open or short

OK ↓

B

CHECK STOP LAMP SWITCH CIRCUIT.

1. Disconnect ASCD control unit connector.
2. Check voltage between ASCD control unit harness terminals ⑪ and ③.

Condition		Voltage [V]
Stop lamp switch	Depressed	Approx. 12
	Released	0

NG →

Check the following:
- Harness for open or short between ASCD control unit and stop lamp switch
- 10A fuse (No. 19, located in the fuse block)
- Stop lamp switch
  Refer to EL-134.

OK ↓

Stop lamp switch is OK.

Trouble Diagnoses (Cont'd)

DIAGNOSTIC PROCEDURE 5

(ASCD STEERING SWITCH CHECK)

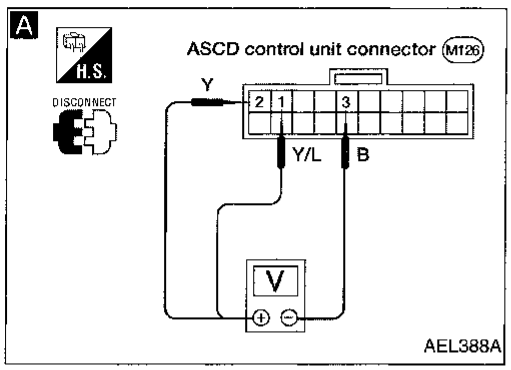

A

CHECK ASCD STEERING SWITCH CIRCUIT FOR ASCD CONTROL UNIT.

1. Disconnect ASCD control unit connector.
2. Check voltage between ASCD control unit harness terminals.

	Terminal No.		Switch condition	
	⊕	⊖	Pressed	Released
SET/ COAST SW	②	③	12V	0V
RESUME/ ACC SW	①	③	12V	0V
CANCEL SW	②	③	12V	0V
	①	③	12V	0V

OK → ASCD steering switch is OK.

NG ↓

CHECK POWER SUPPLY FOR ASCD STEERING SWITCH.
Does horn work?

No → Check the following:
- 10A fuse (No. 17, located in the fuse block)
- Horn relay
- Harness for open or short

Yes ↓

CHECK ASCD STEERING SWITCH.
Refer to "ELECTRICAL COMPONENTS INSPECTION", EL-134.

NG → Replace ASCD steering switch.

OK ↓

Check harness for open or short between ASCD steering switch and ASCD control unit.

Trouble Diagnoses (Cont'd)

DIAGNOSTIC PROCEDURE 6

(VEHICLE SPEED SENSOR CHECK)

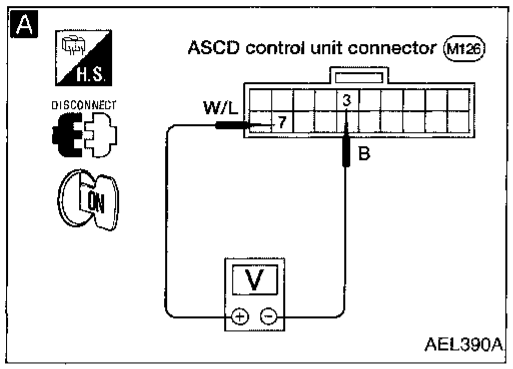

A

CHECK VEHICLE SPEED SENSOR CIRCUIT.

1. Insert wheel chocks and jack up rear of vehicle.
2. Disconnect ASCD control unit connector.
3. Connect voltmeter between ASCD control unit harness terminals ⑦ and ③.
4. Slowly turn rear wheel.
5. Check deflection of voltmeter pointer.

Note:
Before performing this procedure, set transfer shift lever to 2WD position. (4WD models)

OK → Vehicle speed sensor is OK.

NG ↓

Does speedometer operate normally?

No → Check speedometer and vehicle speed sensor circuit. Refer to EL-72.

Yes ↓

Check harness for open or short between ASCD control unit terminal ⑦ and combination meter terminal ⑦.

Trouble Diagnoses (Cont'd)

DIAGNOSTIC PROCEDURE 7

(ASCD PUMP CIRCUIT CHECK)

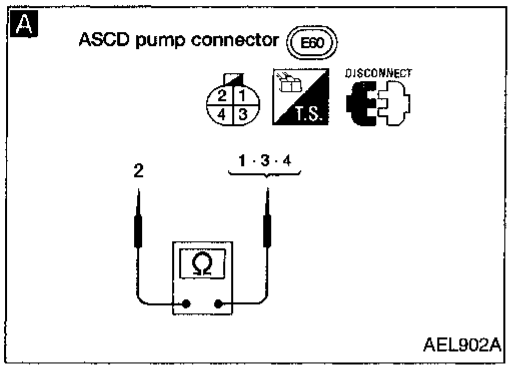

A

CHECK ASCD PUMP.

1. Disconnect ASCD pump connector.
2. Measure resistance between ASCD pump terminals ① and ②, ③, ④.

Terminals		Resistance [Ω]
②	③	Approx. 3
	①	Approx. 65
	④	Approx. 65

NG → Replace ASCD pump.

OK ↓

Check harness for open or short between ASCD pump and ASCD control unit.

Trouble Diagnoses (Cont'd)

DIAGNOSTIC PROCEDURE 8

(ASCD ACTUATOR/PUMP CHECK)

A

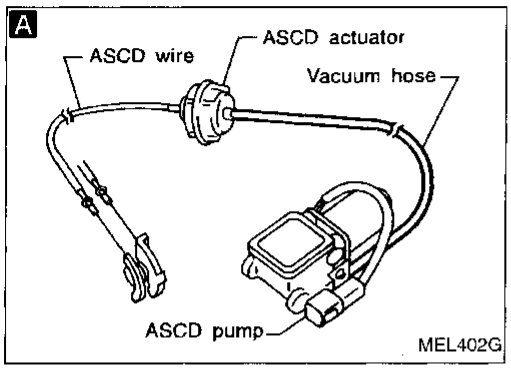

B

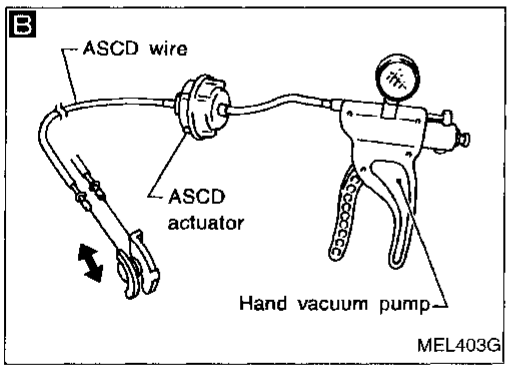

C

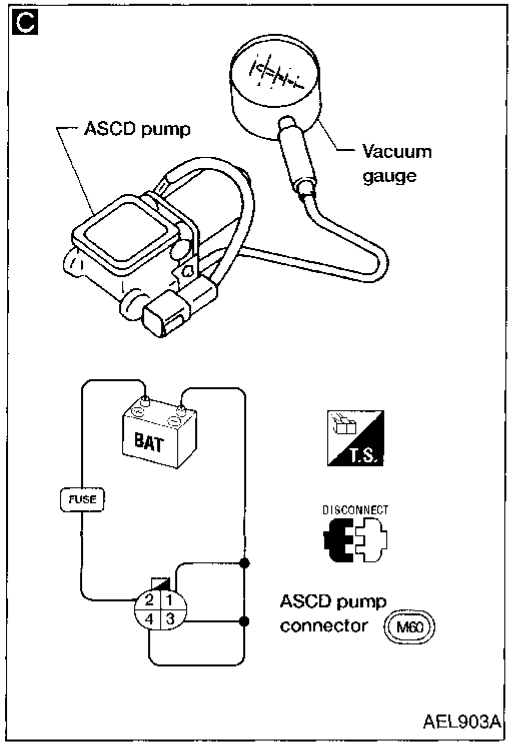

A

CHECK VACUUM HOSE.
Check vacuum hose (between ASCD actuator and ASCD pump) for breakage, cracks or fracture.

NG → Repair or replace hose.

OK ↓

CHECK ASCD WIRE.
Check wire for improper installation, rust formation or breaks.

NG → Repair or replace wire. Refer to "ASCD WIRE ADJUSTMENT", (EL-133).

OK ↓

B

CHECK ASCD ACTUATOR.
1. Disconnect vacuum hose from ASCD actuator.
2. Apply -40 kPa (-0.400 bar, -0.41 kg/cm^2, -5.8 psi) vacuum to ASCD actuator with hand vacuum pump.

ASCD wire should move to pull throttle drum.

3. Wait 10 seconds and check for decrease in vacuum pressure.

Vacuum pressure decrease:
Less than 2.7 kPa (0.0270 bar, 0.028 kg/cm^2, 0.39 psi)

NG → Replace ASCD actuator.

OK ↓

C

CHECK ASCD PUMP.
1. Disconnect vacuum hose from ASCD pump and ASCD pump connector.
2. If necessary remove ASCD pump.
3. Connect vacuum gauge to ASCD pump.
4. Apply 12V direct current to ASCD pump and check operation.

	12V direct current supply terminals		Operation
	⊕	⊖	
Air valve	②	①	Close
Release valve		④	Close
Vacuum motor		③	Operate

A vacuum pressure of at least -35 kPa (-0.350 bar, -0.36 kg/cm^2, -5.1 psi) should be generated.

NG → Replace ASCD pump.

OK ↓

INSPECTION END

Trouble Diagnoses (Cont'd)

ASCD WIRE ADJUSTMENT

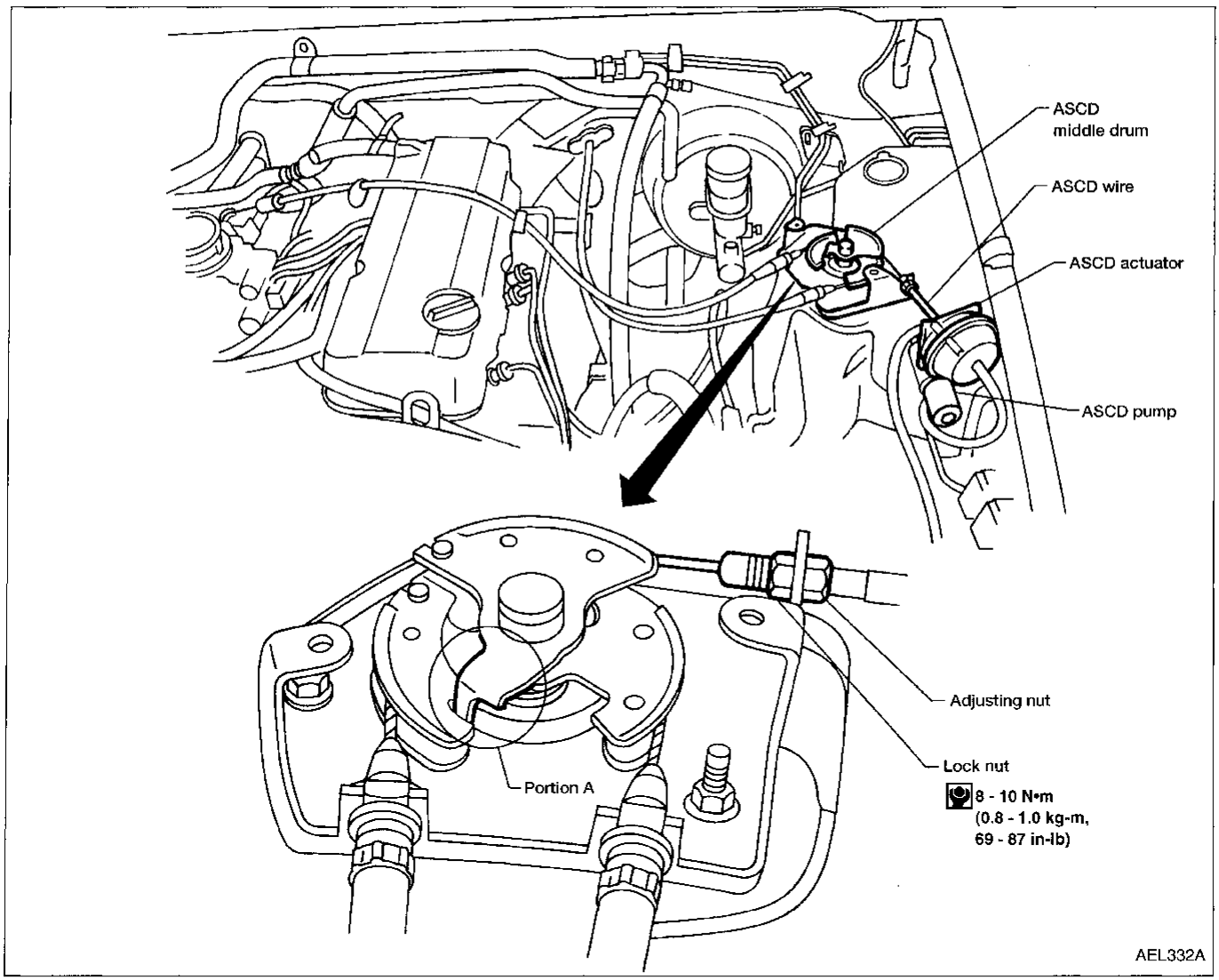

CAUTION:

- **Be careful not to twist ASCD wire when removing it.**
- **Do not overly tighten ASCD wire during adjustment.**

Confirm that accelerator wire is properly adjusted.

- **For accelerator cable adjustment, refer to FE section ("Adjusting Accelerator Wire", "ACCELERATOR CONTROL SYSTEM").**

Adjust the ASCD wire as follows:

1. Loosen lock nut and tighten adjusting nut until portion A of upper throttle lever comes into contact with lower throttle lever.
2. From that position turn back adjusting nut 0.5 to 1 turn, and secure lock nut.
   (This prevents a delay in the operation of the ASCD.)

- For ASCD brake switch adjustment, refer to BR section ("Adjustment", "BRAKE PEDAL AND BRACKET").
- For ASCD clutch switch, refer to CL section ("Adjusting Clutch Pedal," "INSPECTION AND ADJUSTMENT").

Trouble Diagnoses (Cont'd)

ELECTRICAL COMPONENTS INSPECTION

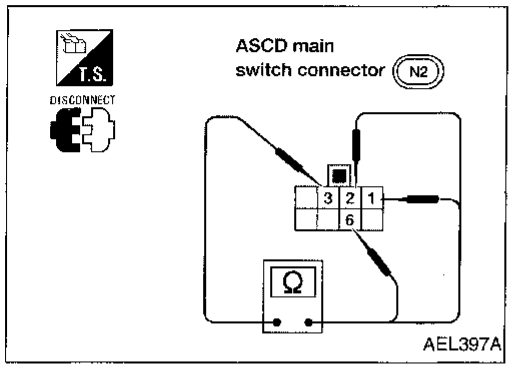

ASCD main switch

Check continuity between terminals by pushing switch to each position.

Switch position	Terminals					
	6	1	2	3	4	5
ON	○	○	○	○		
N		○	○	○	ILL. ○ ○	○
OFF						

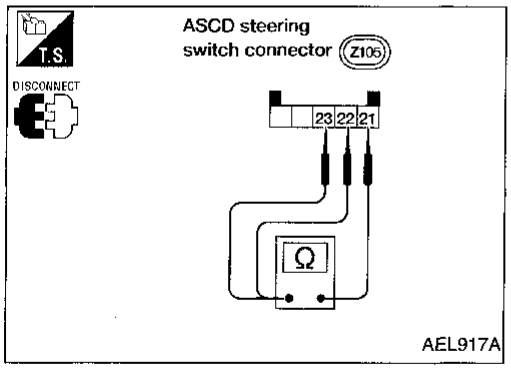

ASCD steering switch

Check continuity between terminals by pushing each button.

Button	Terminal		
	21	22	23
SET/COAST	○	○	
RESUME/ACCEL	○		○
CANCEL	○	▶ ○	
	○	▶	○

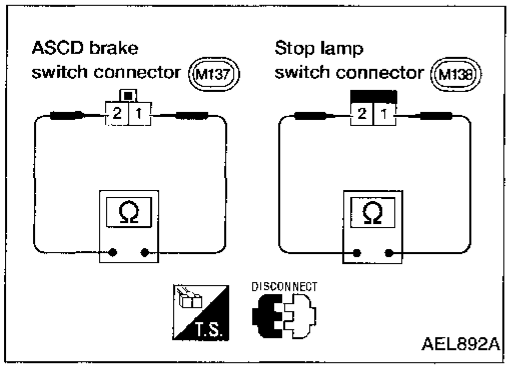

ASCD brake switch and stop lamp switch

Condition	Continuity	
	ASCD brake switch	Stop lamp switch
When brake pedal is depressed	No	Yes
When brake pedal is released	Yes	No

Check each switch after adjusting brake pedal — refer to BR section ("Adjustment", "BRAKE PEDAL AND BRACKET").

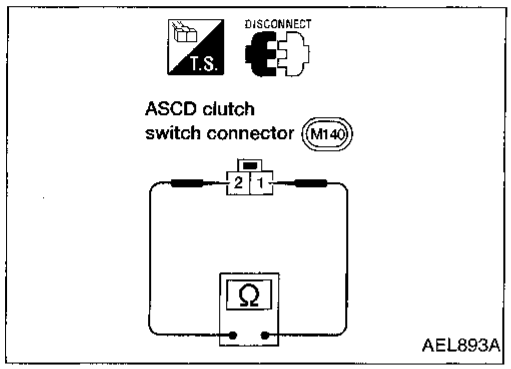

ASCD clutch switch (For M/T models)

Condition	Continuity
When clutch pedal is depressed	No
When clutch pedal is released	Yes

Check switch after adjusting clutch pedal — refer to CL section ("Adjusting Clutch Pedal", "INSPECTION AND ADJUSTMENT").

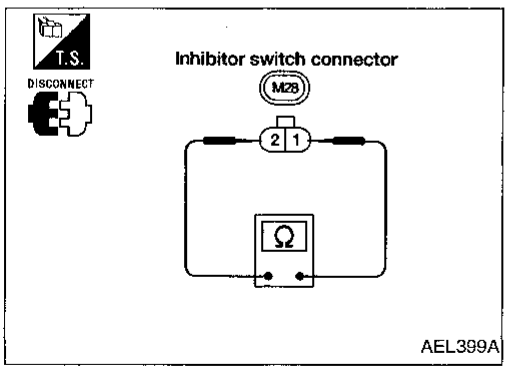

Inhibitor switch (For A/T models)

Condition	Continuity
When shift lever position is "N" or "P"	Yes
When shift lever position is not "N" or "P"	No

Component Layout

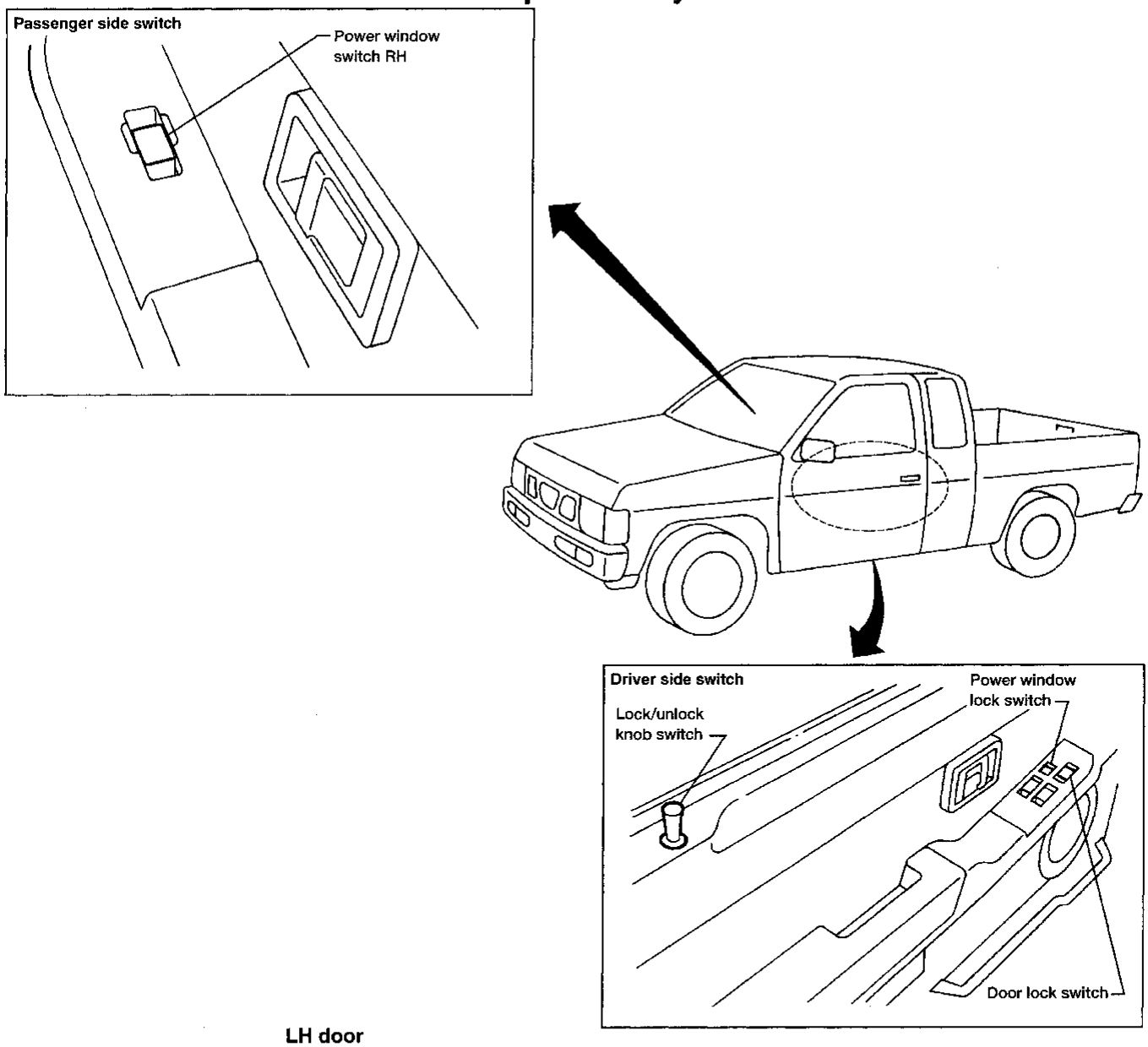

LH door

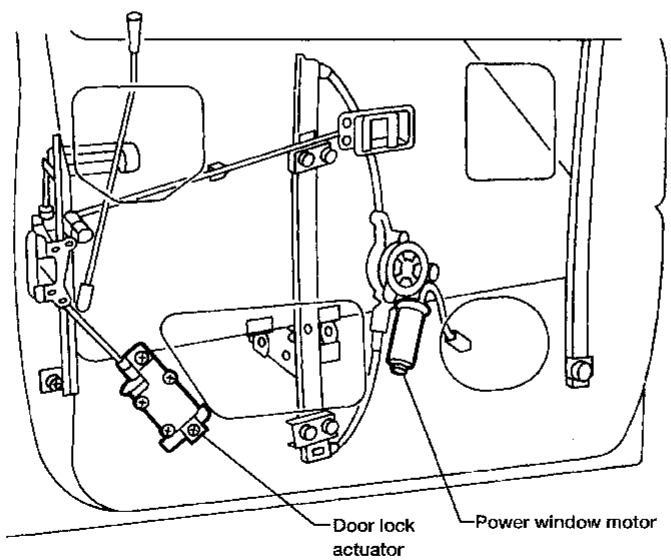

AEL377A

System Description

Power is supplied at all times:
- from brown fusible link (located under relay box)
- to circuit breaker terminal ①
- through circuit breaker terminal ②
- to ignition-2 and power window relay terminal ③.

With the ignition switch in the ON or START position, power is supplied:
- to ignition-2 and power window relay terminal ②.

Ground is supplied to ignition-2 and power window relay terminal ① through body grounds (M49), (M105) and (M160).

The ignition-2 and power window relay is energized and power is supplied:
- through ignition-2 and power window relay terminal ⑤
- to main power window and door lock/unlock switch terminal ⑤,
- to power window switch RH terminal ⑤, and
- to power window amplifier terminals ② and ⑥.

Ground is supplied:
- to main power window and door lock/unlock switch terminal ④, and
- to power window amplifier terminal ①
- through body grounds (M49), (M105) and (M160).

MANUAL OPERATION

Door LH

WINDOW UP

When the main power window and door lock/unlock switch is pressed in the UP position, ground signal is supplied:
- to power window amplifier terminal ③
- through main power window and door lock/unlock switch terminal ③.

Then power is supplied:
- through power window amplifier terminal ④
- to power window motor LH terminal ②.

Ground is supplied:
- to power window motor LH terminal ①
- from power window amplifier terminal ⑧.

With power and ground supplied, the motor raises the window until the switch is released.

WINDOW DOWN

When the main power window and door lock/unlock switch is pressed in the DOWN position, ground signal is supplied:
- to power window amplifier terminal ⑦
- through main power window and door lock/unlock switch terminal ②.

Then power is supplied:
- through power window amplifier terminal ⑧
- to power window motor LH terminal ①.

Ground is supplied:
- to power window motor LH terminal ②
- from power window amplifier terminal ④.

With power and ground supplied, the motor lowers the window until the switch is released.

Door RH

NOTE:
Figures in parentheses ( ) refer to terminal Nos. arranged in order when the DOWN or UP section of power window switch RH is pressed.

Operation by main switch
Power is supplied:
- through main power window and door lock/unlock switch terminal (⑦, ⑥)
- to power window switch RH terminal (⑥, ①).

The subsequent operations are the same as those outlined under "Operation by sub-switches".
Operation by sub-switches
Power is supplied:
- through power window switch RH terminal (③, ④)
- to power window motor RH terminal (①, ②).

When the power window switch RH is pressed in the DOWN or UP position, ground is supplied:
- to power window motor RH terminal (②, ①)
- through power window switch RH terminal (④, ③)
- to power window switch RH terminal (①, ⑥)
- through main power window and door lock/unlock switch terminal (⑥, ⑦)
- to main power window and door lock/unlock switch terminal (④)
- through body grounds (M49), (M105), and (M160).

Then, the motor raises or lowers the window until the switch is released.

AUTO FEATURE

The power window AUTO feature enables the driver to lower the driver's window without holding the window switch in the down position.
The AUTO feature only operates on the driver's window downward movement.
When the main power window and door lock/unlock switch is pressed and released in the AUTO position, ground signal is supplied:
- to power window amplifier terminal ⑤
- through main power window and door lock/unlock switch terminal ①.

Power is supplied:
- to power window motor LH terminal ①
- through power window amplifier terminal ⑧

Ground is supplied:
- to power window motor LH terminal ②
- through power window amplifier terminal ④

Then, the door LH window will travel to the fully open position.

LOCK FEATURE

The power window lock is designed to lock-out passenger window operation.
When the lock switch is pressed to the LOCK position, ground of the main power window and door lock/unlock switch is disconnected. This prevents the passenger power window motor from operating.

Wiring Diagram –WINDOW–

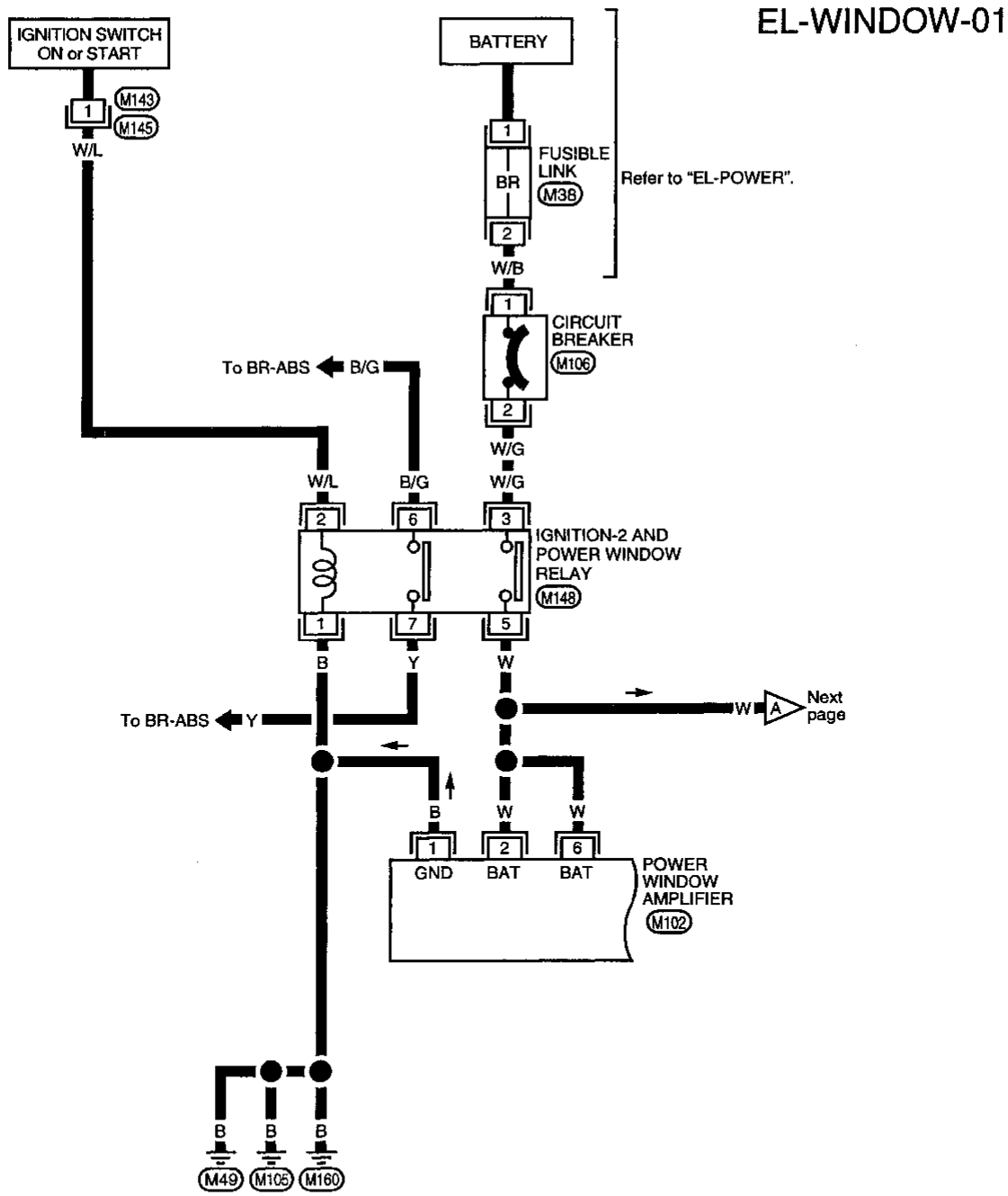

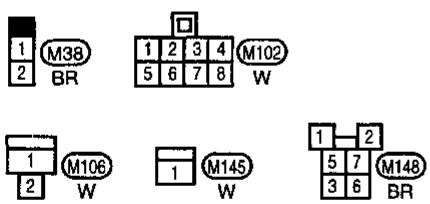

AEL281A-A

Wiring Diagram –WINDOW– (Cont'd)

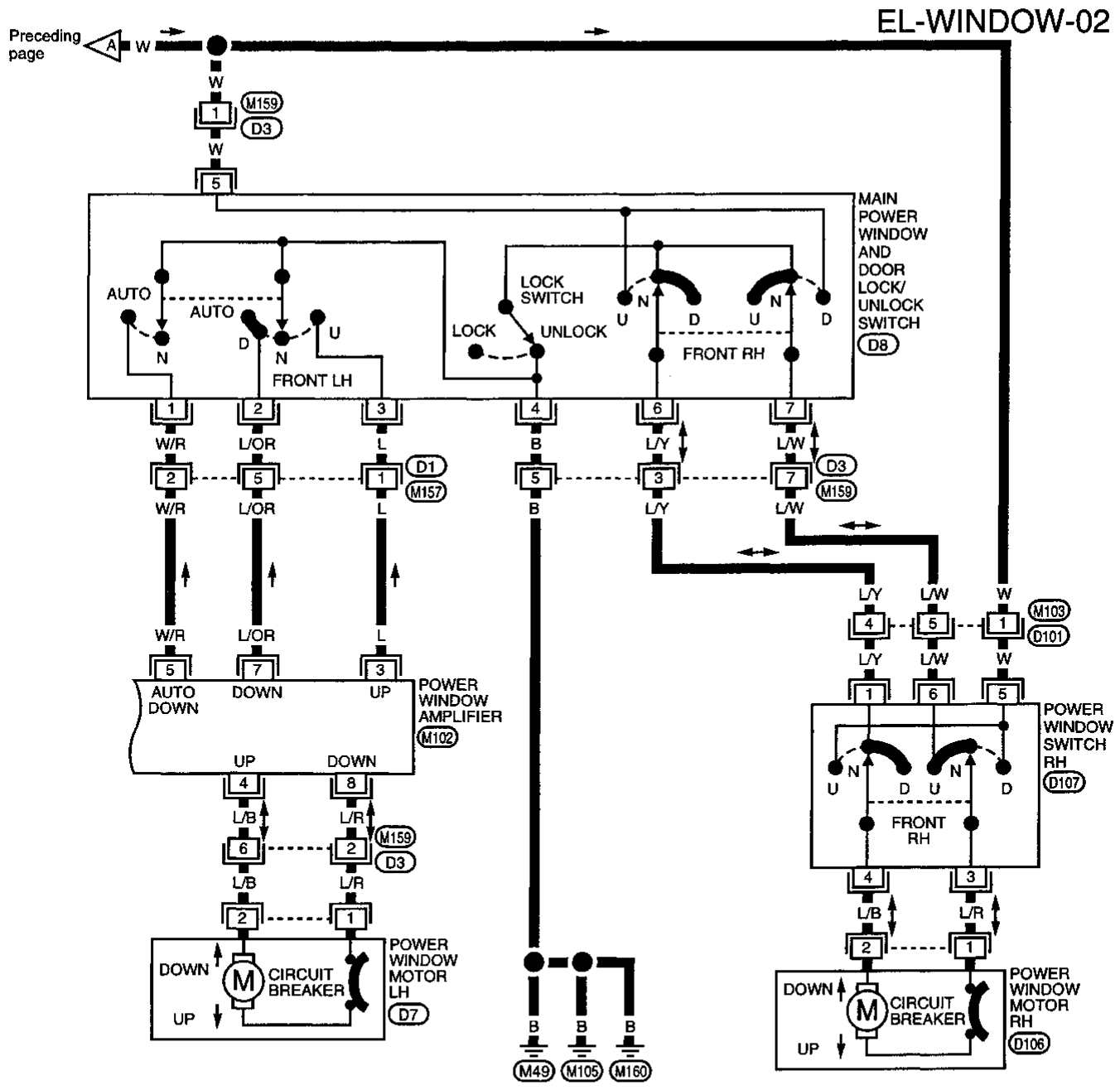

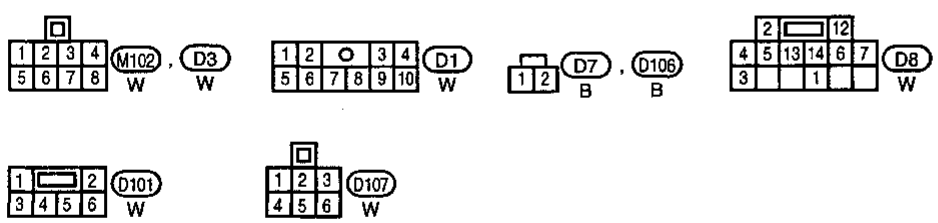

AEL281A-B

Trouble Diagnoses

Symptom	Possible causes	Repair order
None of the power windows can be operated from any switch.	1. Brown fusible link and circuit breaker.	1. Check brown fusible link (located under the relay box) and the circuit breaker. Turn ignition switch ON and verify battery positive voltage is present at terminal ⑤ of both power window switches.
	2. Grounds to ignition-2 and power window relay.	2. Check grounds M49 , M105 and M160 .
	3. Ignition-2 and power window relay	3. Check ignition-2 and power window relay.
	4. Grounds to main power window and door lock/unlock switch.	4. Check grounds M49 , M105 , and M160 .
Driver side power window cannot be operated but passenger window can be operated.	1. Driver side power window motor LH circuit.	1. Check driver side power window motor LH circuit.
	2. Driver side power window motor LH.	2. Check driver side power window motor LH.
	3. Power to power window amplifier.	3. Turn ignition switch ON and verify battery positive voltage is present at terminals ② and ⑥ of power window amplifier.
	4. Ground to power window amplifier.	4. Check grounds M49 , M105 , and M160 .
	5. Driver side power window switch.	5. Check main power window and door lock/unlock switch.
	6. Power window switch circuit.	6. Check wires between main power window and door lock/unlock switch and power window amplifier for open/short circuits.
	7. Power window amplifier.	7. Replace power window amplifier.
Passenger power window cannot be operated.	1. Power window switch RH.	1. Check power window switch RH.
	2. Power window motor RH.	2. Check power window motor RH.
	3. Main power window and door lock/unlock switch.	3. Check main power window and door lock/unlock switch.
	4. Power window circuit.	4. Check wires between main power window and door lock/unlock switch and passenger power window switch and motor for open/short circuits.
Passenger power window cannot be operated by main switch but can be operated by passenger's switch.	1. Main power window and door lock/unlock switch.	1. Check main power window and door lock/unlock switch (lock must be in unlock position).
	2. Power to main power window and door lock/unlock switch.	2. Turn ignition switch ON and verify battery positive voltage is present at terminal ⑤ of main power window and door lock/unlock switch.
Passenger power window cannot be operated by passenger switch but can be operated by main switch.	1. Power window switch RH.	1. Check power window switch RH.
	2. Power to power window switch RH.	2. Turn ignition switch ON and verify battery positive voltage is present at terminal ⑤ of power window switch RH.

System Description

Power is supplied at all times:
- through brown fusible link (located under the relay box)
- to circuit breaker terminal ①
- through circuit breaker terminal ②
- to door lock control unit terminal ②.

Ground is supplied:
- to door lock control unit terminal ⑥
- through body ground (M177) .

INPUT

When the lock/unlock knob switch is moved to the UNLOCK or LOCK position, ground is supplied:
- to door lock control unit terminal ① or ⑤
- from lock/unlock knob switch terminal ③ or ①
- through lock/unlock knob switch terminal ②
- through body grounds (M49) , (M105) and (M160) .

When the main power window and door lock/unlock switch is moved to the UNLOCK or LOCK position, ground is supplied:
- to door lock control unit terminal ① or ⑤
- from main power window and door lock/unlock switch terminal ⑬ or ⑫
- through main power window and door lock/unlock switch terminal ⑭ or ④
- through body grounds (M49) , (M105) and (M160) .

OUTPUT

Unlock

Power is supplied:
- from door lock control unit terminal ④
- to door lock actuator LH terminal ③, and
- to door lock actuator RH terminal ①.

Ground is supplied:
- from door lock control unit terminal ③
- to door lock actuator LH terminal ①, and
- to door lock actuator RH terminal ③.

With power and ground supplied, the door actuators move to the unlocked position.

Lock

Power is supplied:
- from door lock control unit terminal ③
- to door lock actuator LH terminal ①, and
- to door lock actuator RH terminal ③.

Ground is supplied:
- from door lock control unit terminal ④
- to door lock actuator LH terminal ③, and
- to door lock actuator RH terminal ①.

With power and ground supplied, the door actuators move to the locked position.

Schematic

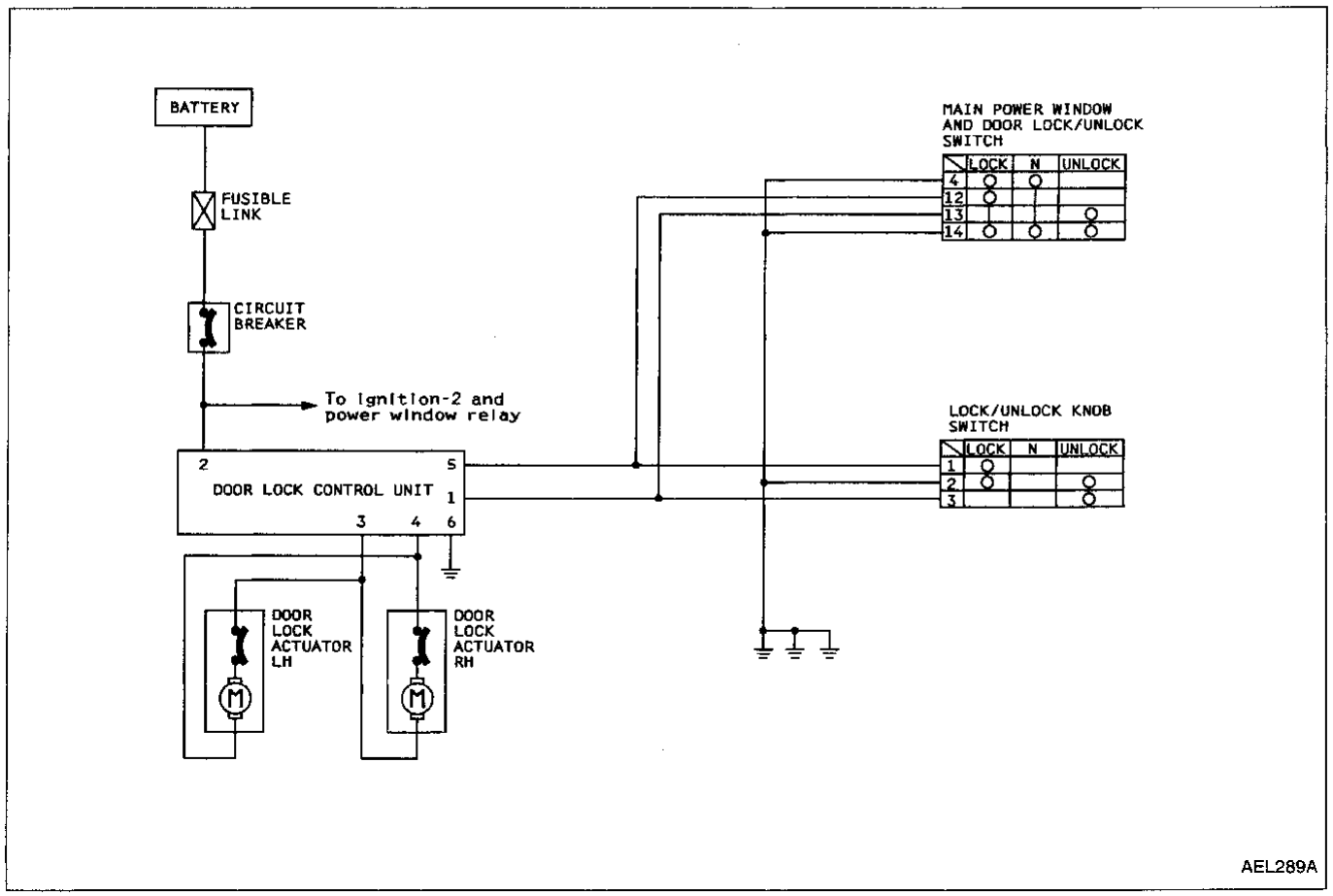
BATTERY
FUSIBLE LINK
CIRCUIT BREAKER
To ignition-2 and power window relay
DOOR LOCK CONTROL UNIT
2
5
1
3
4
6
DOOR LOCK ACTUATOR LH
DOOR LOCK ACTUATOR RH
M
M
MAIN POWER WINDOW AND DOOR LOCK/UNLOCK SWITCH
LOCK
N
UNLOCK
4
12
13
14
LOCK/UNLOCK KNOB SWITCH
LOCK
N
UNLOCK
1
2
3
AEL289A

NOTES

Wiring Diagram –D/LOCK–

EL-D/LOCK-01

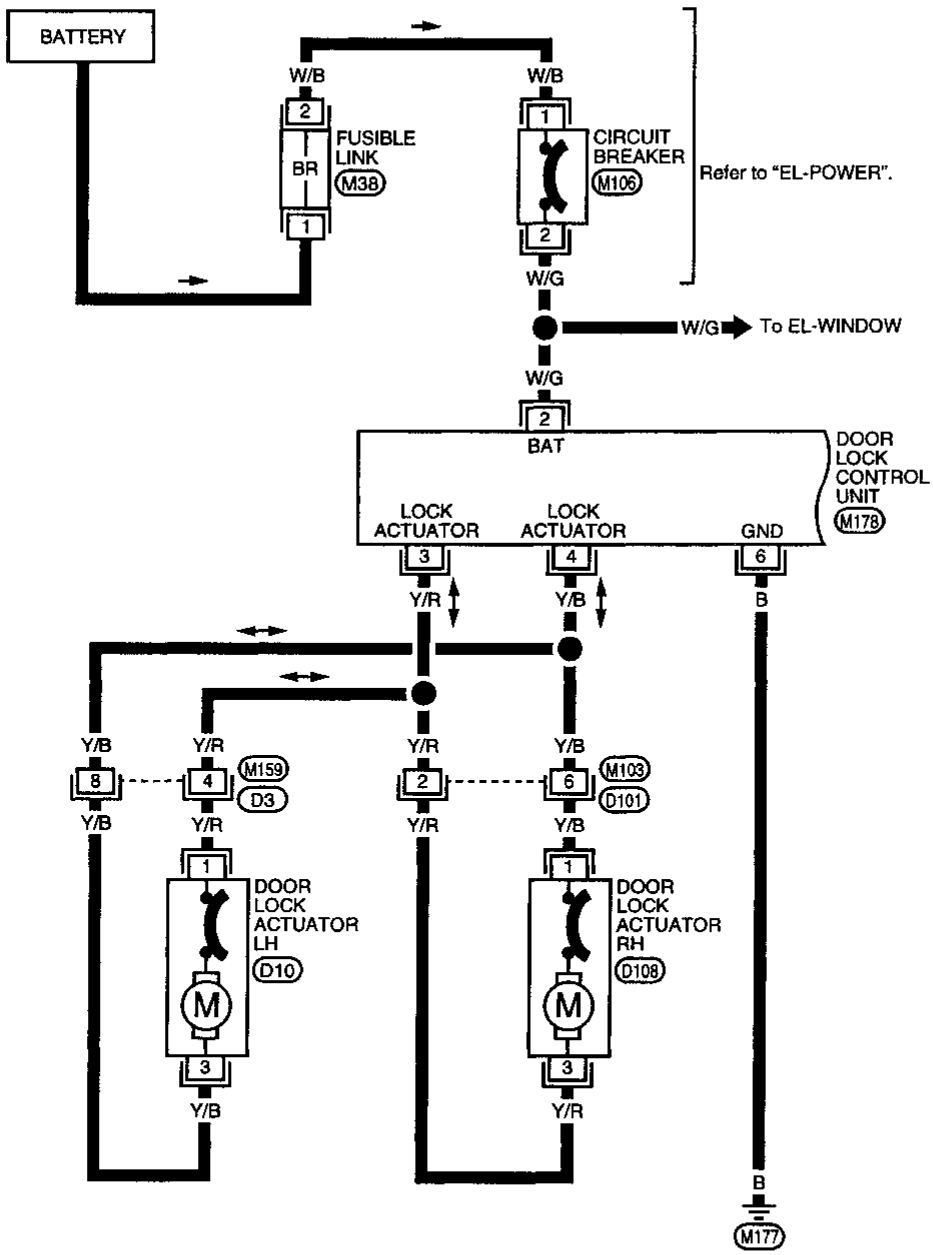

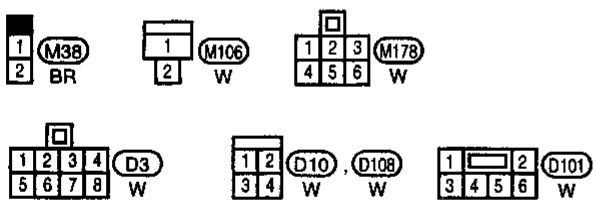

AEL288A-A

Wiring Diagram –D/LOCK– (Cont'd)

EL-D/LOCK-02

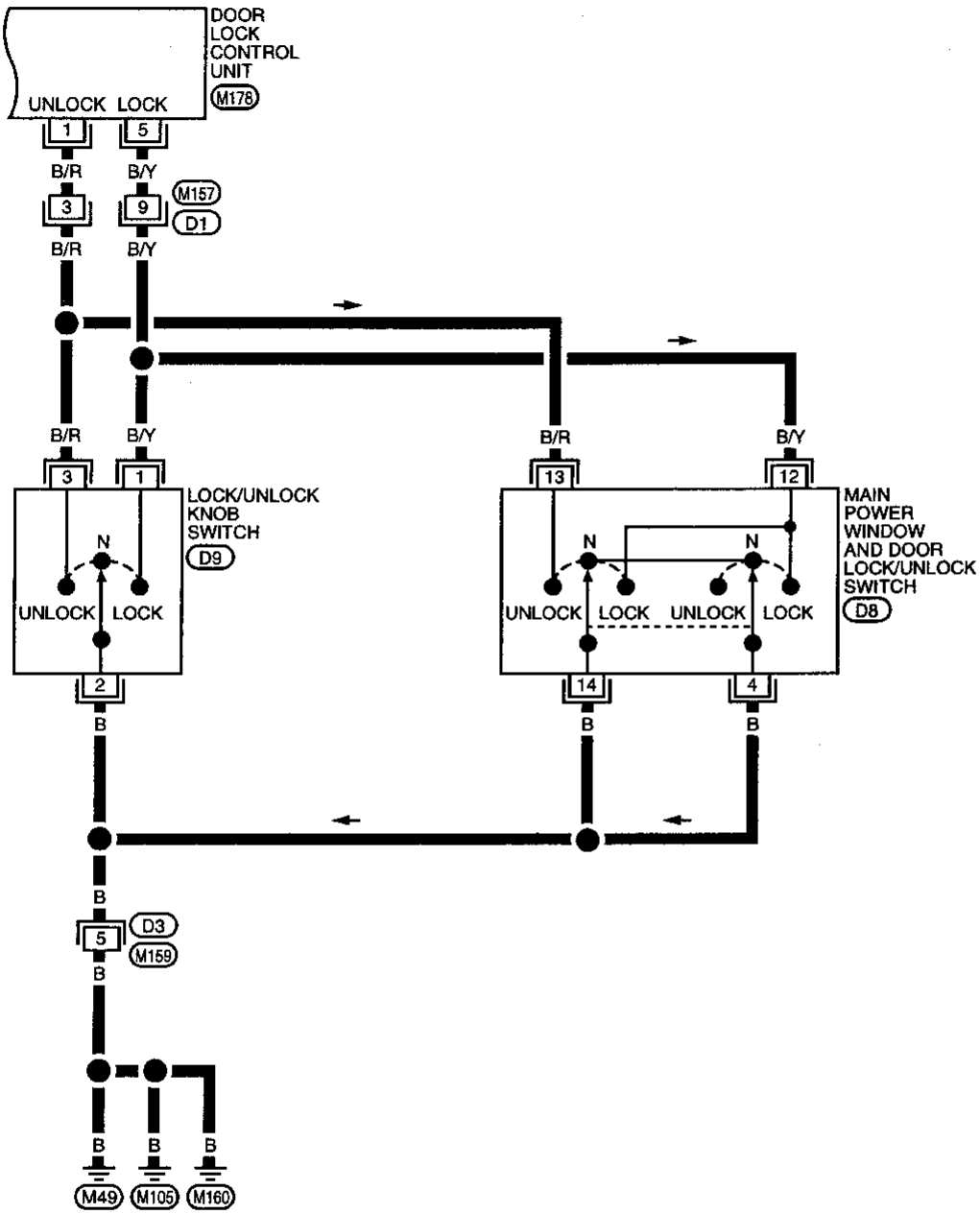

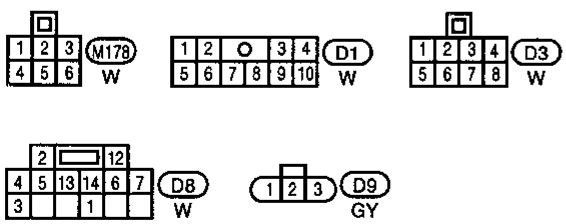

AEL288A-B

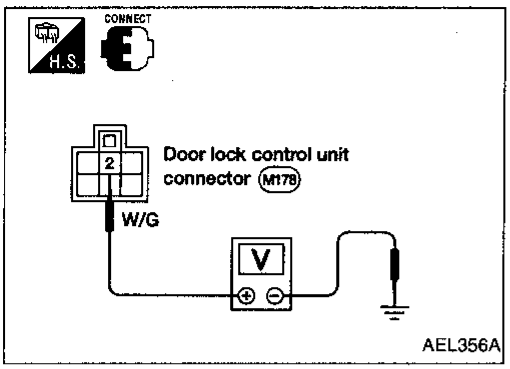

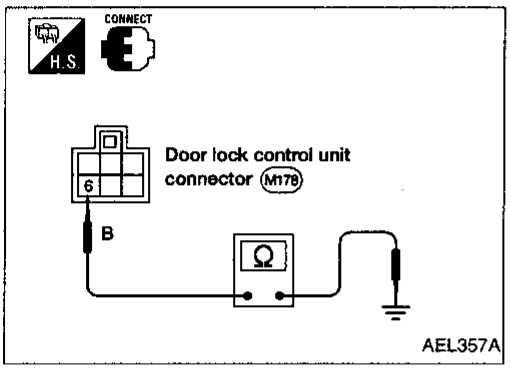

Trouble Diagnoses

MAIN POWER SUPPLY AND GROUND CIRCUIT CHECK

Main power supply for door lock control unit

Terminals	Battery voltage existence
② - Ground (GND)	Yes

Ground circuit for door lock control unit

Terminals	Continuity
⑥ - Ground	Yes

Trouble Diagnoses (Cont'd)

DIAGNOSTIC PROCEDURE

SYMPTOM: Power door locks cannot be operated by door lock/unlock switches.

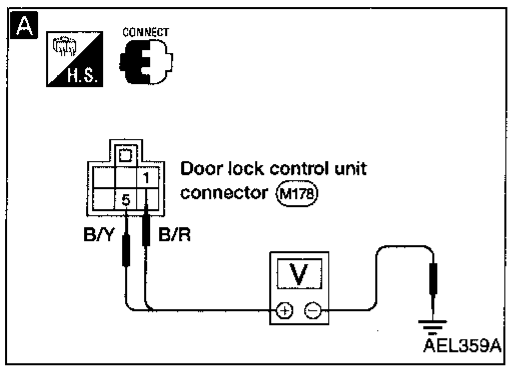

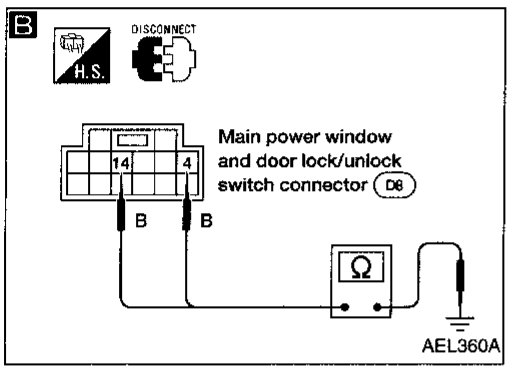

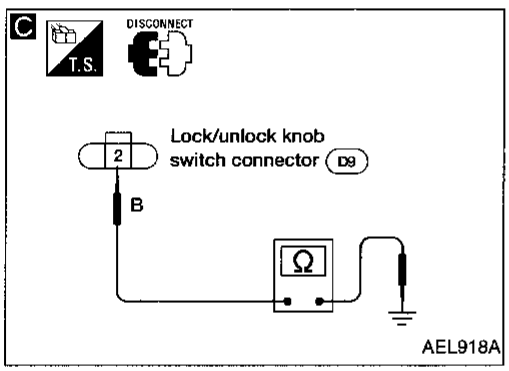

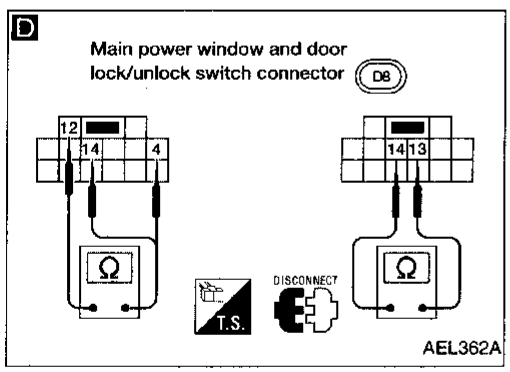

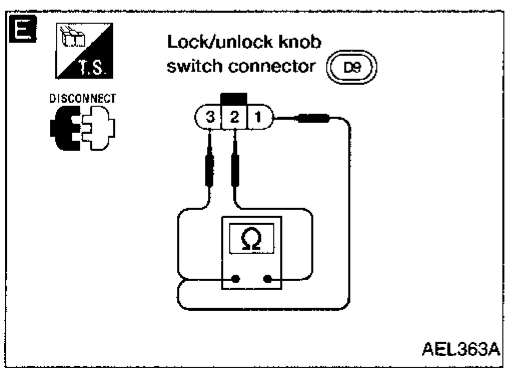

A

CHECK SIGNAL OF DOOR LOCK/ UNLOCK SWITCH.

Check voltage between control unit terminal ① or ⑤ and ground.

Terminals	Door lock/ unlock switch operation	Voltage (V)
⑤ - GND	Lock	0
	N and Unlock	12
① - GND	Unlock	0
	N and Lock	12

OK → Ⓐ (Go to next page.)

NG ↓

B C

CHECK GROUND CIRCUIT FOR LOCK/ UNLOCK SWITCHES.

1. Disconnect door lock/unlock switch.
2. Check continuity between door lock/ unlock switch terminal(s) and ground.

B Main power window and door lock/ unlock switch
Between terminals ⑭, ④ and ground.

C Lock/unlock knob switch
Between terminal ② and ground.
Continuity should exist.

OK → Repair ground harness of door lock/unlock switch.

NG ↓

D E

CHECK DOOR LOCK/UNLOCK SWITCHES.

1. Disconnect door lock/unlock switch.
2. Check continuity.

D Main power window and door lock/ unlock switch

Operation	Terminals	Continuity
Lock	⑫ - ④, ⑭	Yes
Unlock	⑬ - ⑭	

E Lock/unlock knob switch

Operation	Terminals	Continuity
Lock	① - ②	Yes
Unlock	③ - ②	

OK → Repair harness between door lock/unlock switch and control unit connector.

NG ↓

Replace door lock/unlock switch.

Trouble Diagnoses (Cont'd)

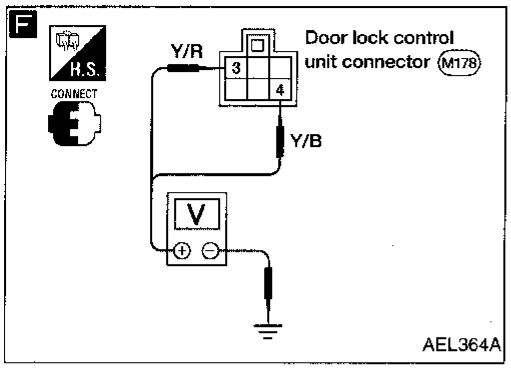

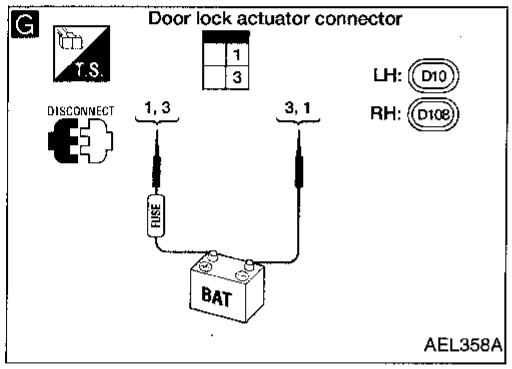

Ⓐ

F

CHECK DOOR LOCK ACTUATOR CIRCUIT.

Check voltage for door lock actuator.

Door lock actuator LH and RH

Door lock/unlock switch operation	Terminals ⊕	Terminals ⊖	Voltage (V)
Lock	③	GND	Battery voltage
Unlock	④	GND	

NG → Replace door lock control unit.

OK ↓

G

CHECK DOOR LOCK ACTUATOR.

1. Disconnect door lock actuator.
2. Apply 12V direct current to door lock actuator and check operation.

Door lock/unlock switch operation		Terminals ⊕	Terminals ⊖
LH	Lock	①	③
	Unlock	③	①
RH	Lock	③	①
	Unlock	①	③

NG → Repair harness between control unit connector and door lock actuator.

OK ↓

Replace malfunctioning power door lock actuator.

NOTES

Passenger Compartment

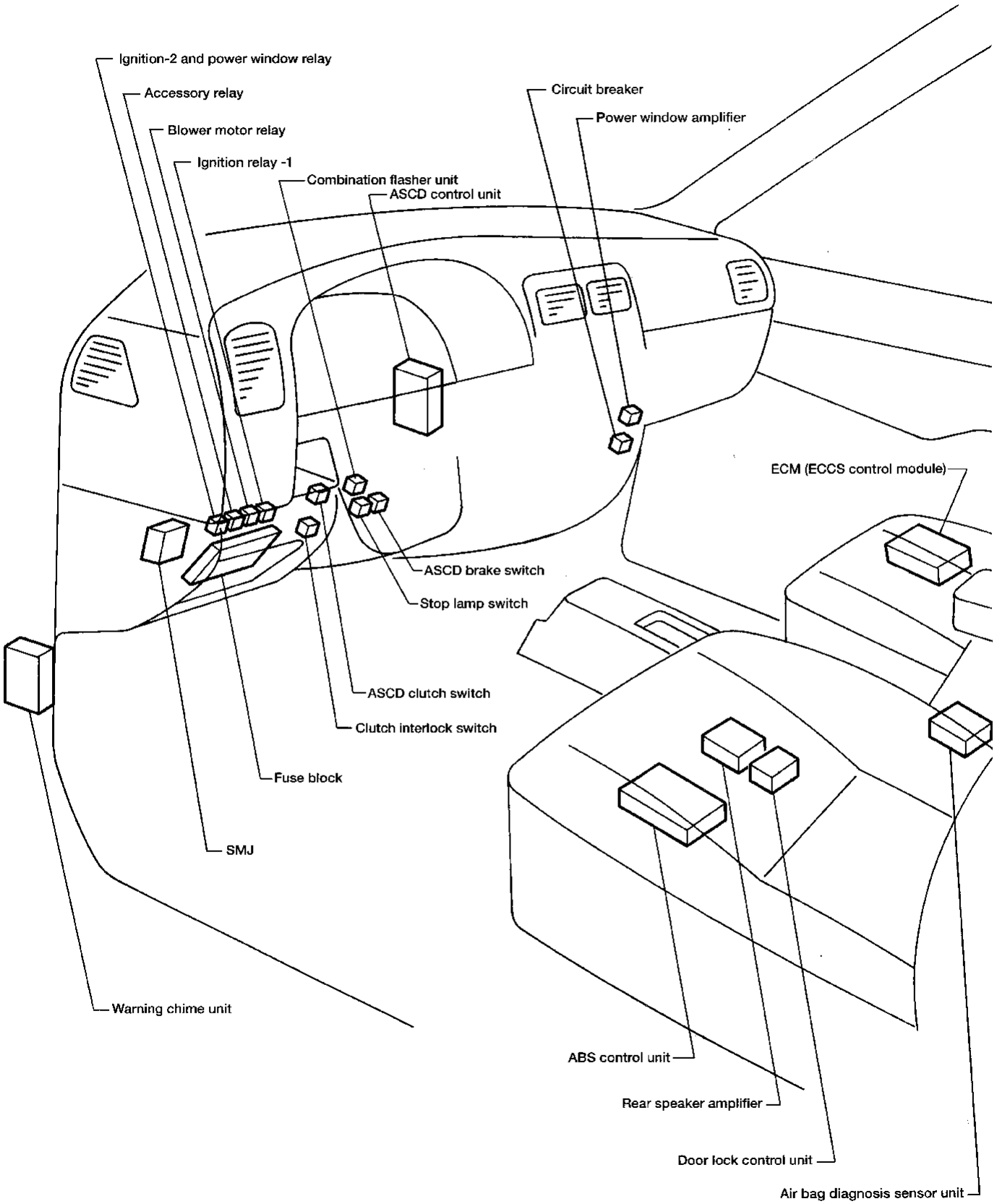

AEL911A

Engine Compartment

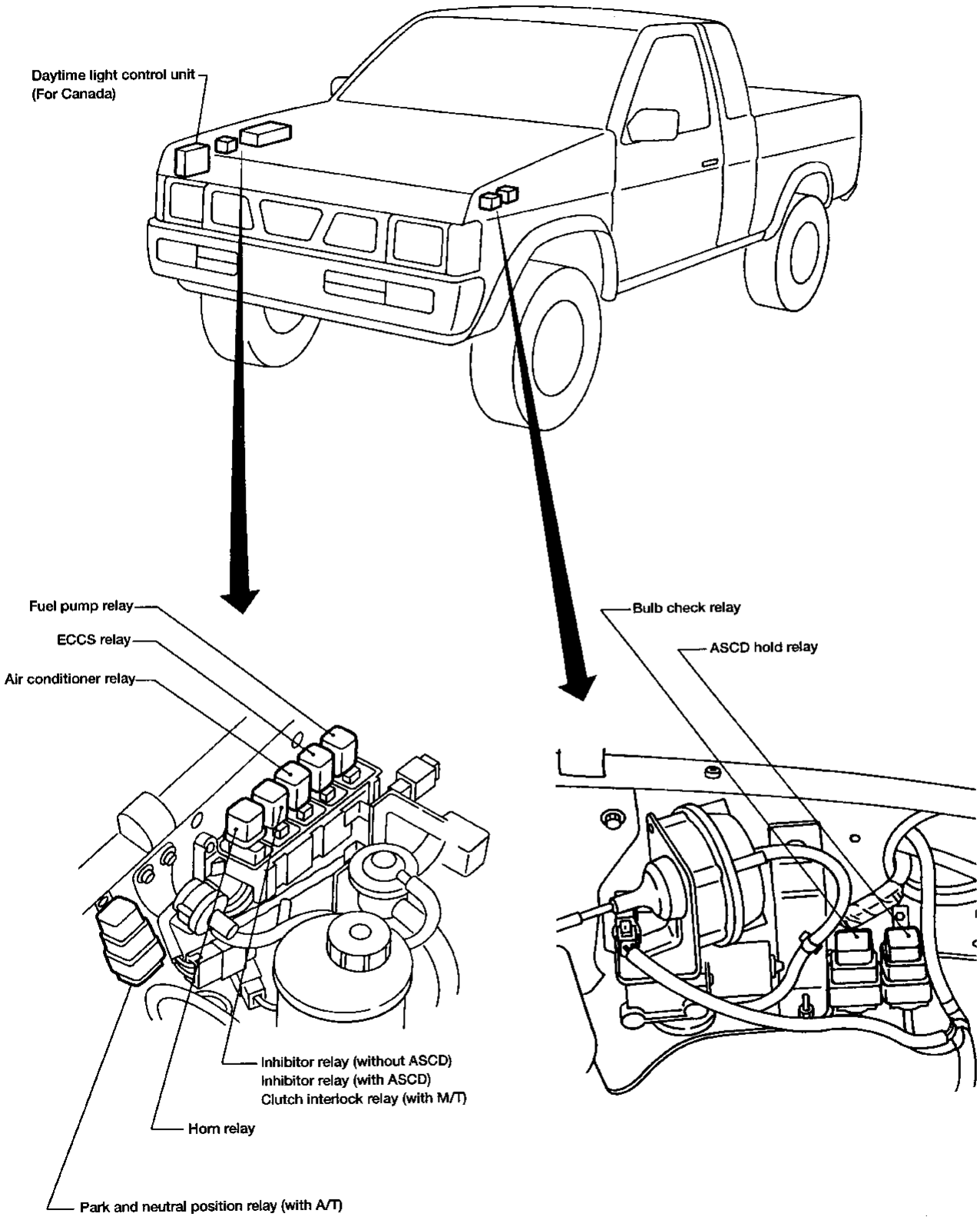

AEL314A

How To Read Harness Layout

Example:

E2 (E1) GY/2: Brake fluid level switch

Connector color/Cavity

Connector number

Grid reference

The following Harness Layouts use a map style grid to help locate connectors on the drawings:

- Main Harness and Air Bag Harness

To use the grid reference

1) Find the desired connector number on the connector list.
2) Find the grid reference.
3) On the drawing, find the crossing of the grid reference letter column and number row.
4) Find the connector number in the crossing zone.
5) Follow the line (if used) to the connector.

CONNECTOR SYMBOL

Main symbols of connectors (In Harness Layout) are indicated below.

Connector type	Waterproof type		Standard type	
	Male	Female	Male	Female
● Cavity: Less than 4 ● Relay connector				
● Cavity: From 5 to 8				
● Cavity: More than 9				
● Ground: terminal etc.	—			

Outline

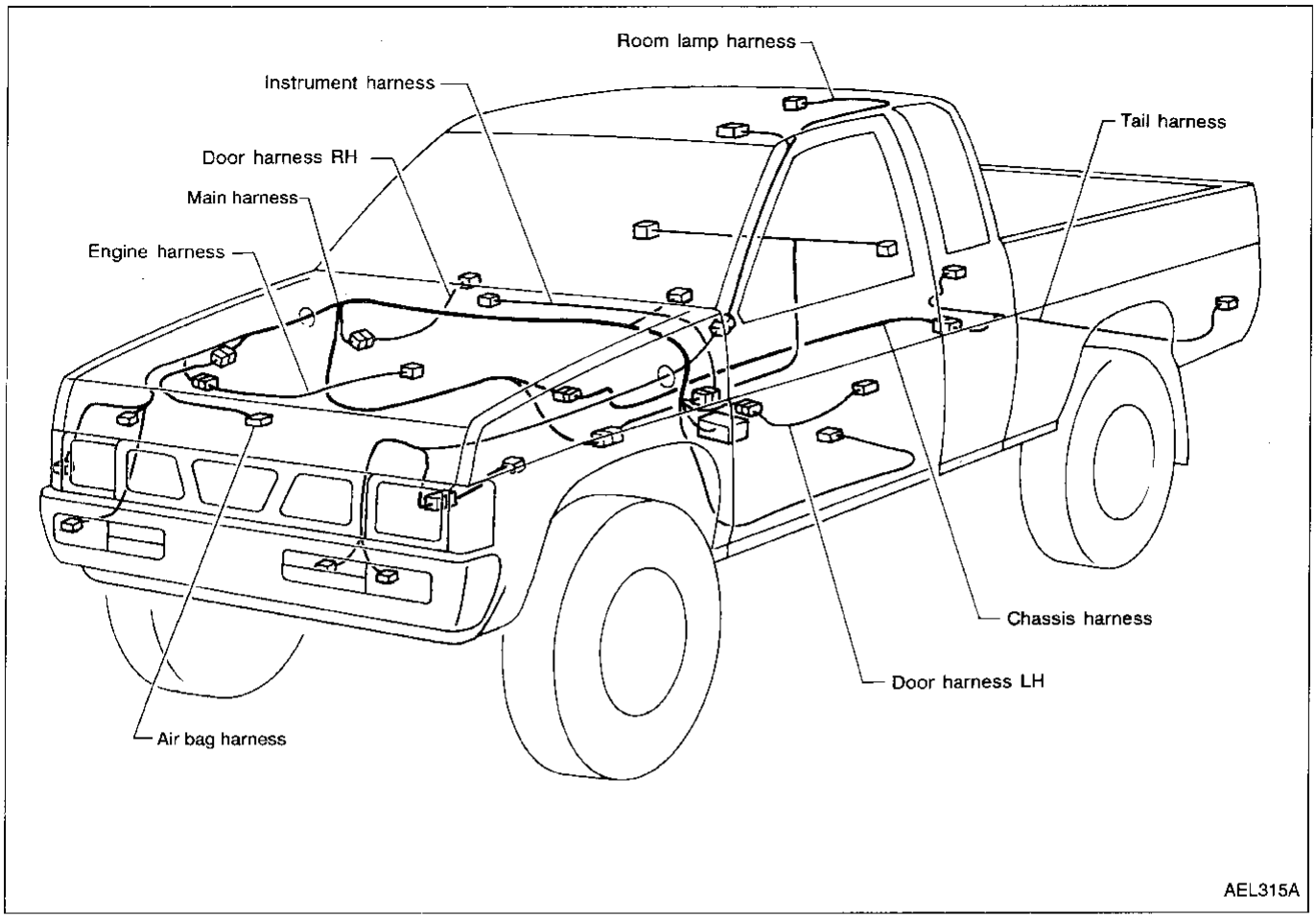
Room lamp harness
Instrument harness
Door harness RH
Main harness
Engine harness
Tail harness
Chassis harness
Door harness LH
Air bag harness
AEL315A

Main Harness and Air Bag Harness

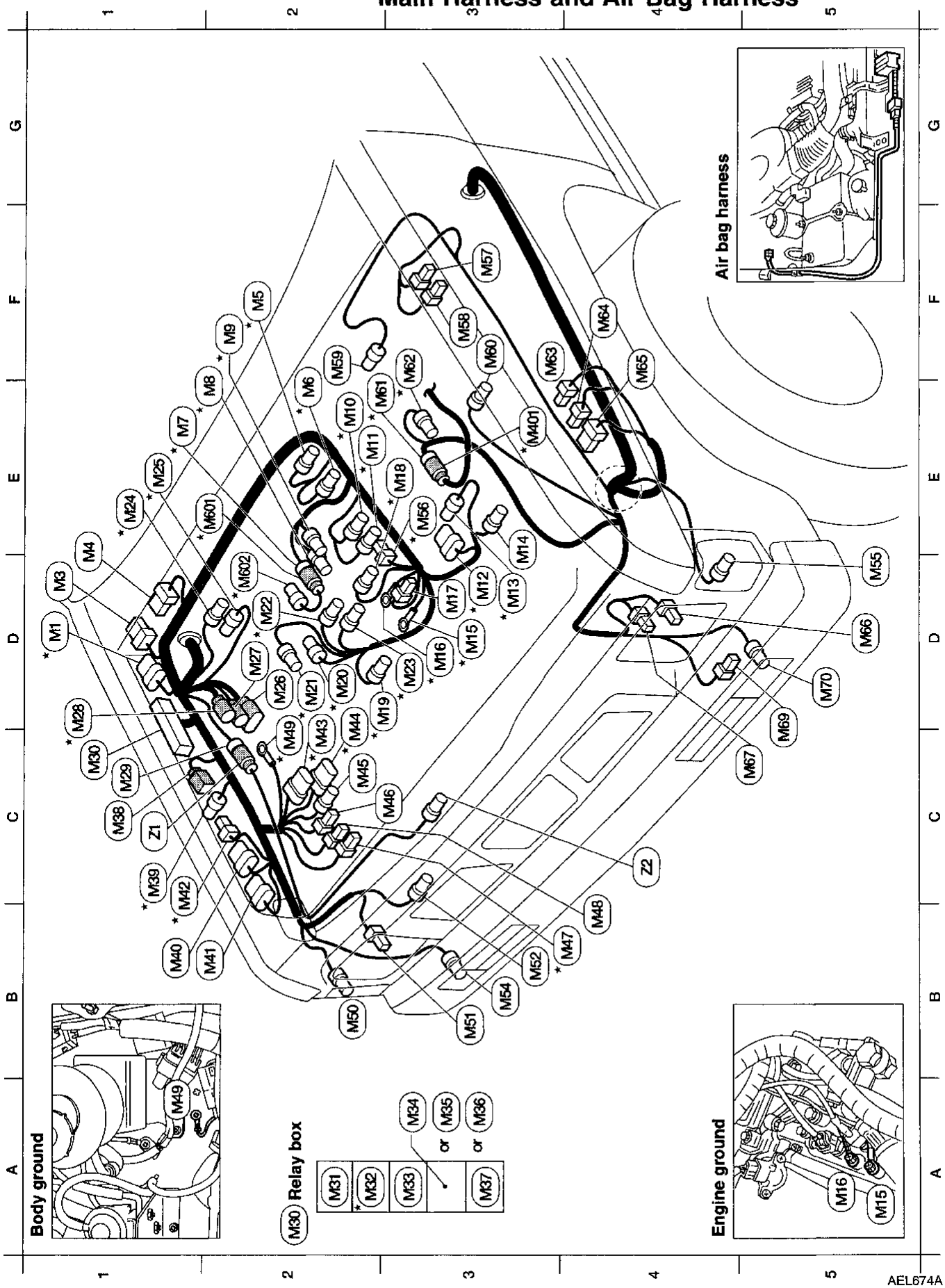

D1 *M1 GY/6 : EVAP canister purge volume control valve
D1 M3 W/6 : Wiper motor
E1 M4 W/8 : Wiper amplifier
F2 *M5 B/2 : Injector No. 4
E2 *M6 B/2 : Injector No. 3
E1 *M7 GY/4 : IACV-AAC solenoid valve and to M601
E2 *M8 GY/2 : EGR temperature sensor
F2 *M9 B/2 : EGRC-solenoid valve
E2 *M10 B/2 : Injector No. 2
E2 *M11 B/2 : Injector No. 1
D3 *M12 GY/6 : Distributor (camshaft position sensor)
E3 *M13 GY/2 : Distributor (ignition coil)
E3 M14 GY/1 : A/C compressor
D3 *M15 — : Engine ground
D3 *M16 — : Engine ground
D3 M17 B/1 : Thermal transmitter
E3 *M18 GY/2 : Engine coolant temperature sensor
D3 *M19 G/2 : EVAP canister purge control solenoid valve
D2 *M20 BR/4 : Mass air flow sensor
D2 *M21 GY/2 : Intake air temperature sensor
D2 *M22 GY/3 : Throttle position switch
D3 *M23 BR/3 : Throttle position sensor
E1 *M24 GY/3 : Absolute pressure sensor
E1 *M25 B/2 : MAP/BARO switch solenoid valve

D2 M26 GY/8 : Inhibitor switch
D2 M27 GY/3 : Solenoid valve unit
D1 *M28 GY/2 : Inhibitor switch
C1 M29 GY/4 : To Z1 (with 4-wheel drive)
C1 M30 — : Relay box
A2 M31 L/4 : Fuel pump relay
A2 *M32 L/4 : ECCS relay
A3 M33 L/4 : Air conditioner relay
A3 M34 L/4 : Inhibitor relay (without ASCD)
A3 M35 GY/6 : Inhibitor relay (with ASCD)
A3 M36 L/4 : Clutch interlock relay (with M/T)
A3 M37 GY/3 : Horn relay
} Relay box
C1 M38 BR/2 : Fusible link
C1 *M39 B/2 : Swirl control valve control vacuum check switch
B1 M40 GY/6 : Daytime light control unit (with DTRL)
B2 M41 GY/8 : Daytime light control unit (with DTRL)
C1 *M42 L/4 : Park and neutral position relay
C2 *M43 GY/8 : To E4
D2 *M44 B/8 : To E1
C2 M45 GY/1 : To E3
C3 M46 B/2 : To E2
B4 *M47 B/2 : Fusible link
B4 M48 W/3 : Fusible link
C2 *M49 — : Body ground

B2 M50 GY/2 : Front parking lamp RH
B3 M51 B/3 : Headlamp RH
B3 M52 GY/2 : Dual-pressure switch
B3 M54 GY/2 : Front turn signal lamp RH
D5 M55 GY/2 : Front parking lamp LH
E3 *M56 GY/2 : Resistor
F3 M57 W/2 : Washer motor
F3 M58 B/2 : Washer fluid level switch (for Canada)
F2 M59 GY/2 : Brake fluid level switch
F3 M60 GY/4 : ASCD pump (with ASCD)
E2 *M61 GY/4 : To M401
F3 *M62 GY/3 : Front heated oxygen sensor
F3 M63 L/4 : Bulb check relay
F4 M64 L/4 : ASCD hold relay (with M/T)
F4 M65 BR/6 : ASCD hold relay (with A/T)
D5 M66 B/3 : Headlamp LH
C5 M67 B/3 : Headlamp LH (with DTRL)
D5 M69 B/1 : Horn
D5 M70 GY/2 : Front turn signal lamp LH
E3 *M401 GY/4 : To M61
E2 *M601 GY/4 : To M7
D2 *M602 PU/2 : IACV-FICD solenoid valve

Air Bag Harness

C1 Z1 GY/4 : To M29 (with 4-wheel drive)
C4 Z2 GY/2 : Crash zone sensor (with 4-wheel drive)

* : Be sure to connect and lock the connectors securely after repair work. Failure to do so may cause the on-board diagnostic system to light up the MIL as an open circuit detection. (Refer to EC Section.)

AEL912A

Main Harness and Air Bag Harness (Cont'd)

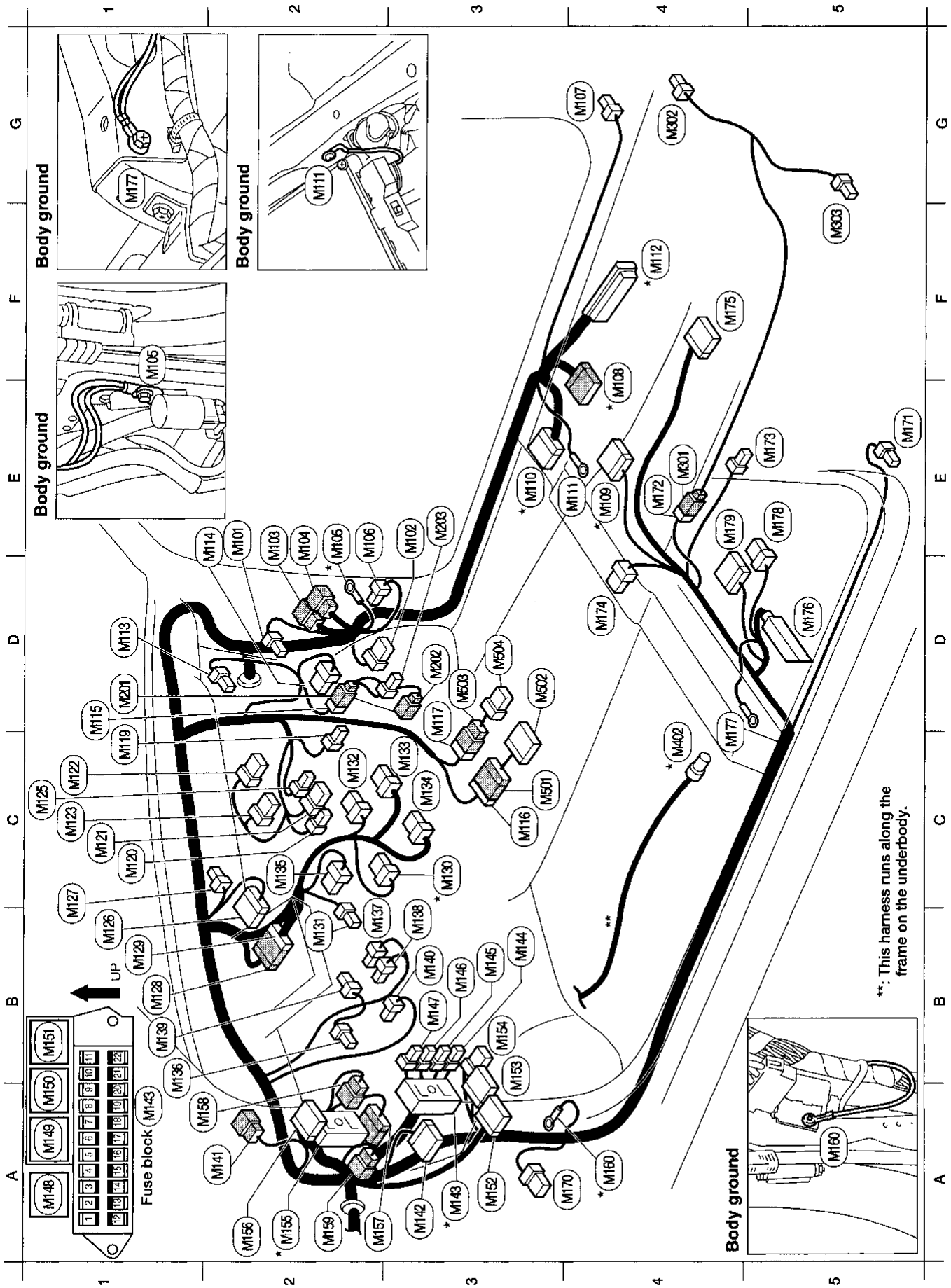

AEL913A

E2 (M101) W/2 : Blower motor
E3 (M102) W/8 : Power window amplifier
E2 (M103) W/6 : To (D101)
E2 (M104) W/6 : To (D102)
E2 * (M105) — : Body ground
E2 (M106) W/2 : Circuit breaker
G4 (M107) B/1 : Door switch RH
E4 * (M108) W/10 : To (C2)
E4 * (M109) W/14 : To (C1)
E3 * (M110) B/27 : Joint connector-1
E4 (M111) — : Body ground
F4 * (M112) SMJ : ECM (ECCS control module)
D1 (M113) W/4 : Thermo control amplifier
E2 (M114) W/6 : Fan resistor
D1 (M115) W/2 : To (M201)
C3 (M116) W/10 : To (M501) (with premium audio)
Radio and cassette player (with base audio)
D3 (M117) W/6 : To (M503) (with premium audio)
Radio and cassette player (with base audio)
C1 (M119) B/2 : Cigarette lighter socket
C1 (M120) W/3 : Air conditioner switch (with A/C)
C1 (M121) B/6 : Fan switch
C1 (M122) W/8 : Hazard switch
C1 (M123) W/6 : Illumination control switch
C1 (M125) W/2 : Heater (illumination)
B1 (M126) B/20 : ASCD control unit
C1 (M127) W/1 : Parking brake switch
B1 (M128) W/10 : To (M129)
B1 (M129) W/10 : To (M128)
C3 * (M130) W/6 : Ignition switch
B2 (M131) W/2 : Key switch

C2 (M132) L/8 : Wiper switch
C3 (M133) W/6 : Turn signal switch
C3 (M134) W/8 : Lighting switch
C2 (M135) W/6 : To spiral cable
B1 (M136) L/2 : Clutch interlock switch
B2 (M137) L/2 : ASCD brake switch (with ASCD)
B3 (M138) B/2 : Stop lamp switch
B1 (M139) B/3 : Combination flasher unit
B3 (M140) L/2 : ASCD clutch switch (with M/T)
A2 (M141) W/6 : To (R1)
A3 (M142) B/27 : Joint connector-2
A3 * (M143) SMJ : Fuse block
B3 (M144) B/1 : To (M143)
B3 (M145) W/1 : To (M143)
B3 (M146) W/1 : To (M143)
B3 (M147) W/3 : To (M143)
A1 (M148) BR/6 : Ignition-2 and power window relay
A1 (M149) L/4 : Accessory relay
A1 (M150) L/4 : Blower motor relay
B1 (M151) L/4 : Ignition-1 relay
(Fuse block)
A3 (M152) W/16 : Data link connector for GST
B3 (M153) GY/14 : Data link connector for CONSULT
B3 (M154) L/6 : ABS check connector
A2 * (M155) SMJ : To (N1)
A2 (M156) L/10 : Diode
A2 (M157) W/10 : To (D1) (with power windows and power door locks)
A1 (M158) W/6 : To (D2) (without power windows and power door locks)
A2 (M159) W/8 : To (D3)
A4 * (M160) — : Body ground
A4 (M170) W/8 : Warning chime unit

E5 (M171) B/3 : Door switch LH
E4 (M172) L/4 : To (M301)
E5 (M173) B/2 : Seat belt buckle switch
D4 (M174) W/6 : A/T device
F4 (M175) Y/24 : Air bag diagnosis sensor unit
D5 (M176) W/17 : ABS control unit
D4 (M177) — : Body ground
E5 (M178) W/6 : Door lock control unit
E4 (M179) W/12 : Rear speaker amplifier
D1 (M201) W/2 : To (M115)
D3 (M202) W/2 : Glove box lamp
E3 (M203) BR/2 : Glove box lamp switch
E4 (M301) L/4 : To (M172)
G4 (M302) B/2 : Rear speaker RH
F5 (M303) B/2 : Rear speaker LH
C4 * (M402) GY/4 : Rear heated oxygen sensor
C3 (M501) W/10 : To (M116) (with premium audio)
D3 (M502) W/10 : Radio and cassette player (with premium audio)
D3 (M503) W/6 : To (M117)
D3 (M504) W/6 : Radio and cassette player (premium audio)

Diode (M156)

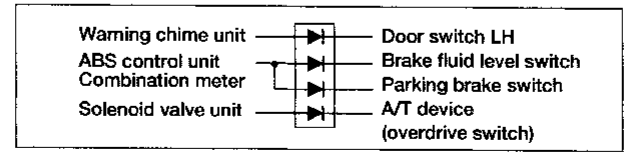

* : Be sure to connect and lock the connectors securely after repair work. Failure to do so may cause the on-board diagnostic system to light up the MIL as an open circuit detection. (Refer to EC Section.)

AEL914A

Instrument Harness

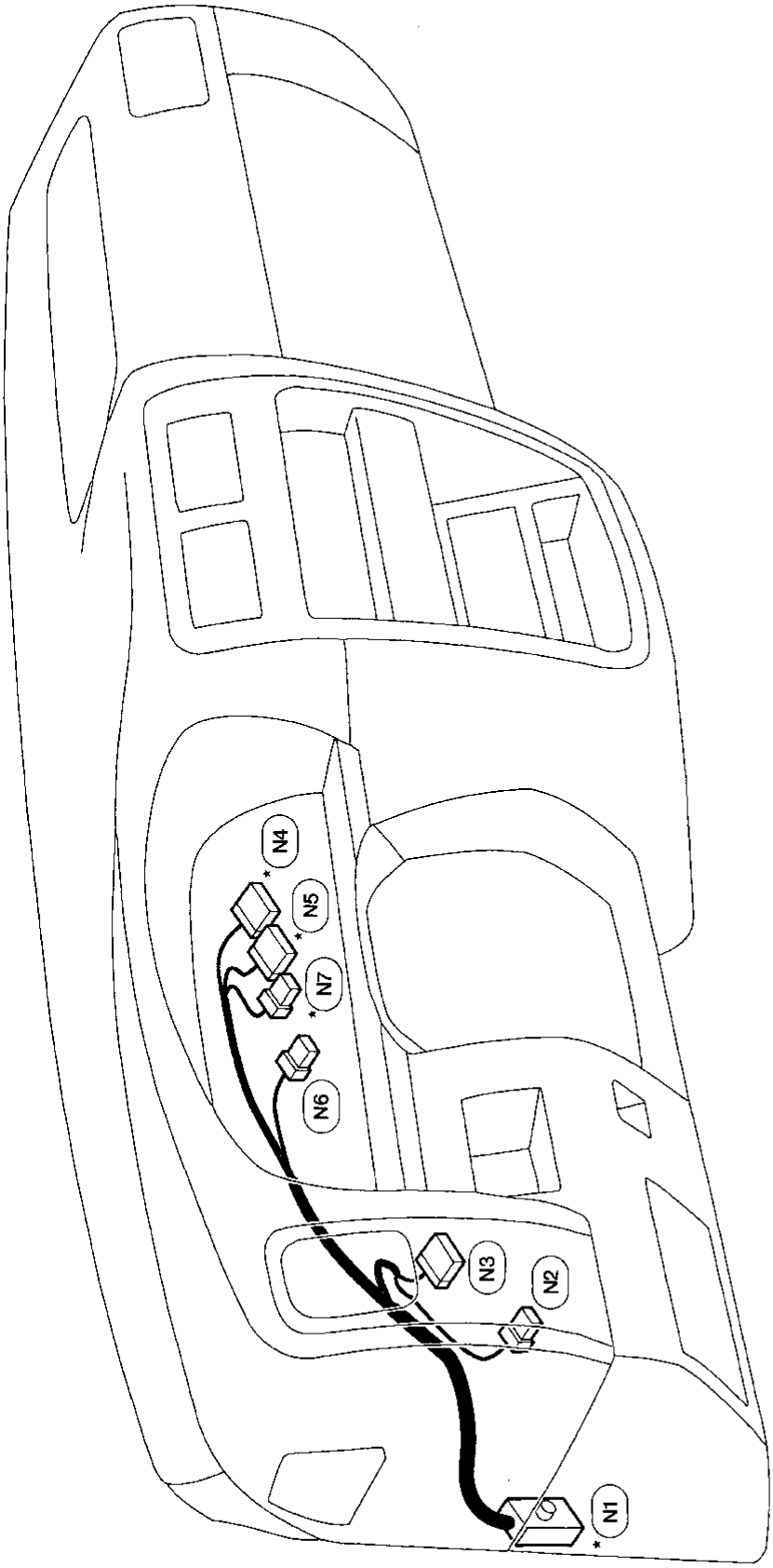

* (N1) SMJ : To (M153) (SMJ)
(N2) W/6 : ASCD main switch
(N3) W/10 : Door mirror switch
* (N4) B/10 : Combination meter
* (N5) B/12 : Combination meter
(N6) W/8 : Combination meter
* (N7) W/12 : Combination meter

* : Be sure to connect and lock the connectors securely after repair work. Failure to do so may cause the on-board diagnostic system to light up the MIL as an open circuit detection. (Refer to EC section.)

AEL320A

Engine Harness

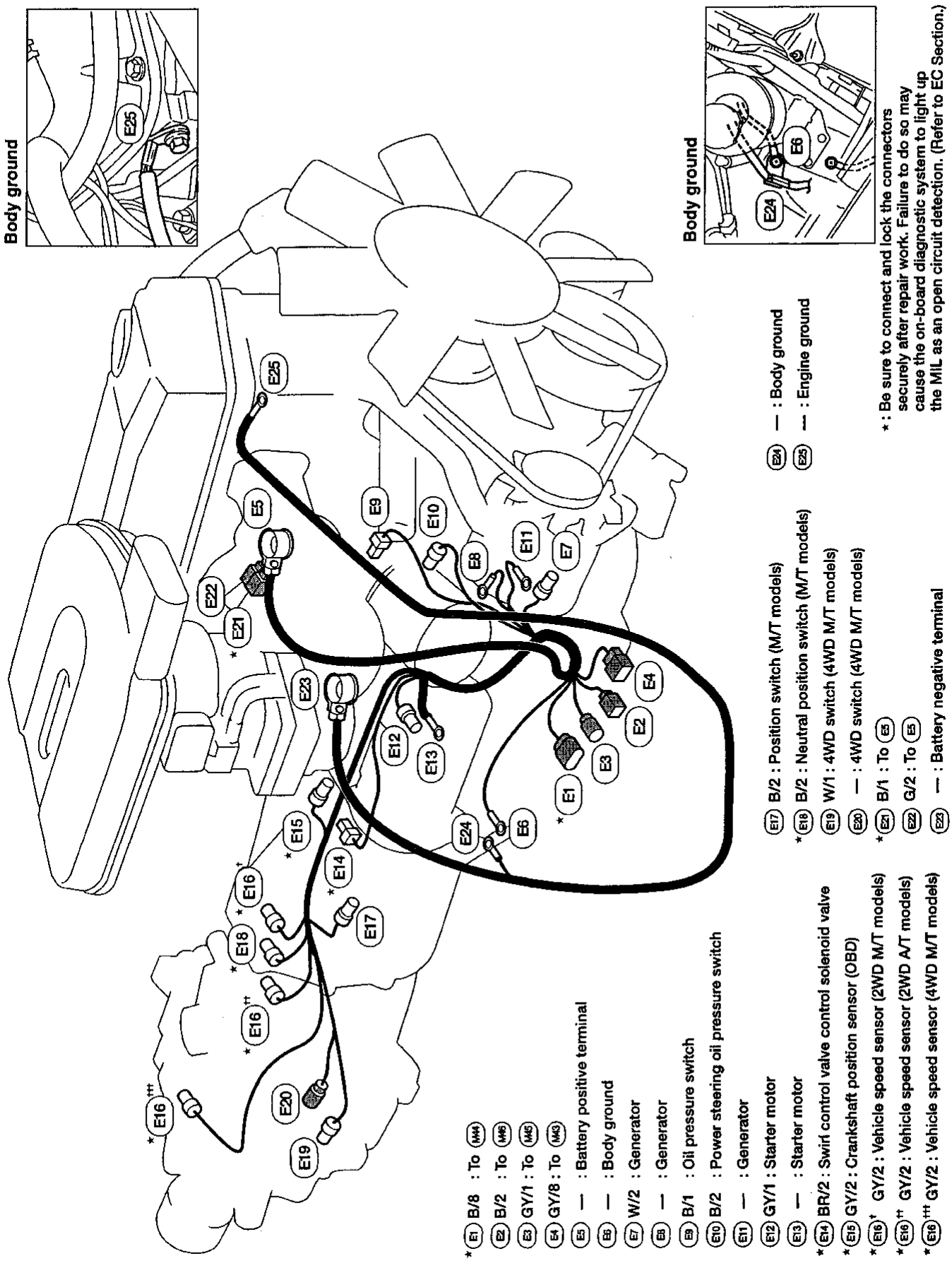
Body ground
E25
Body ground
E24
E6
E1
E2
E3
E4
E5
E7
E8
E9
E10
E11
E12
E13
E14
E15
E16
E17
E18
E19
E20
E21
E22
E23
E24
E25
E16
E16
E16

Chassis and Tail Harness

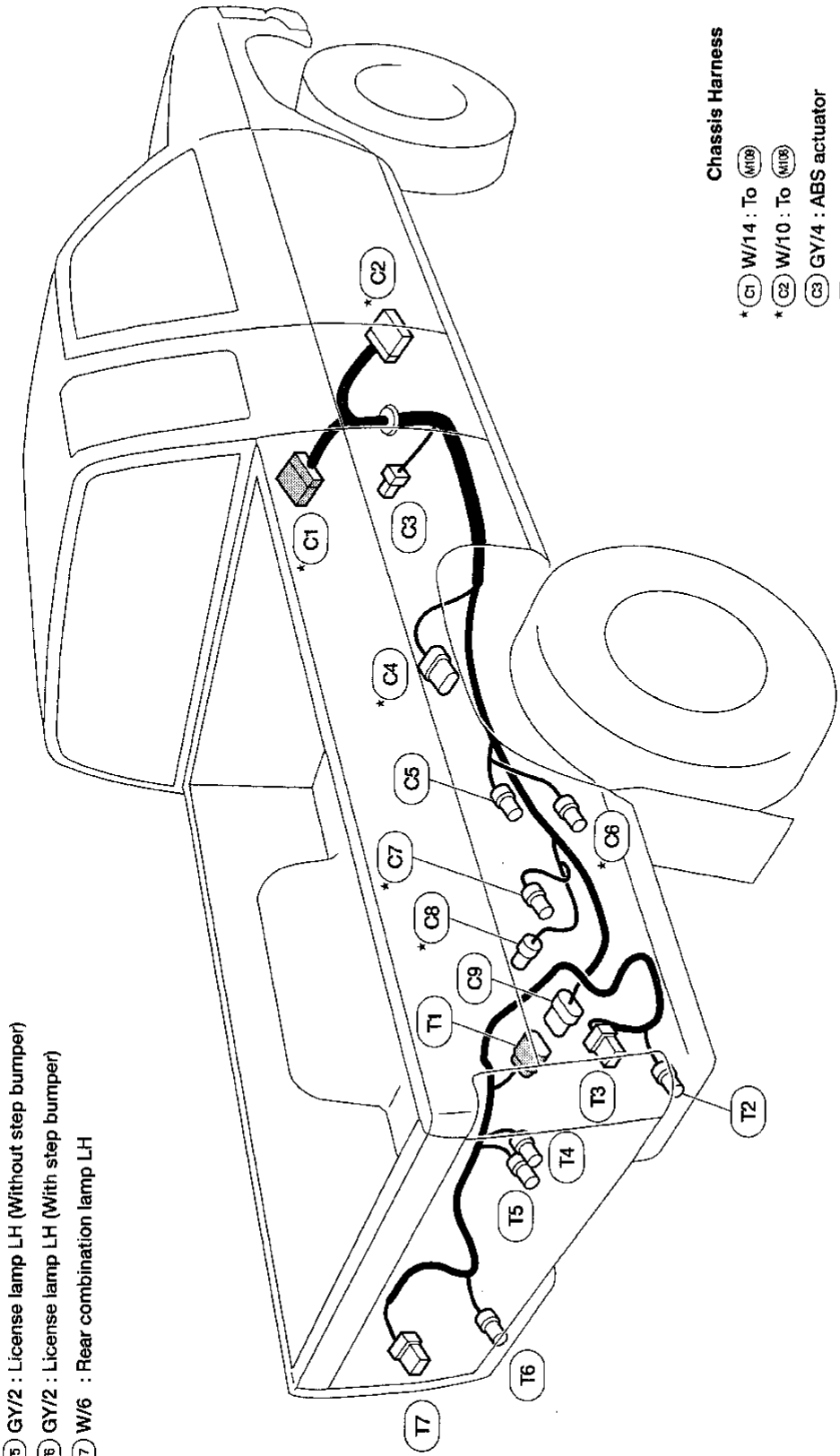

Chassis Harness

- ★ C1 W/14 : To M109
- ★ C2 W/10 : To M108
- C3 GY/4 : ABS actuator
- ★ C4 GY/6 : Fuel tank gauge unit
- C5 GY/2 : Rear sensor
- ★ C6 GY/3 : EVAP control system pressure sensor
- ★ C7 G/2 : Vacuum cut valve bypass valve
- ★ C8 B/2 : EVAP canister vent control valve
- C9 GY/8 : To T1

Tail Harness

- T1 GY /8: To C9
- T2 GY/2 : License lamp RH (With step bumper)
- T3 W/6 : Rear combination lamp RH
- T4 GY/2 : License lamp RH (Without step bumper)
- T5 GY/2 : License lamp LH (Without step bumper)
- T6 GY/2 : License lamp LH (With step bumper)
- T7 W/6 : Rear combination lamp LH

★ : Be sure to connect and lock the connectors securely after repair work. Failure to do so may cause the on-board diagnostic system to light up the MIL as an open circuit detection. (Refer to EC section.)

AEL322A

Front Door Harness

Door harness LH

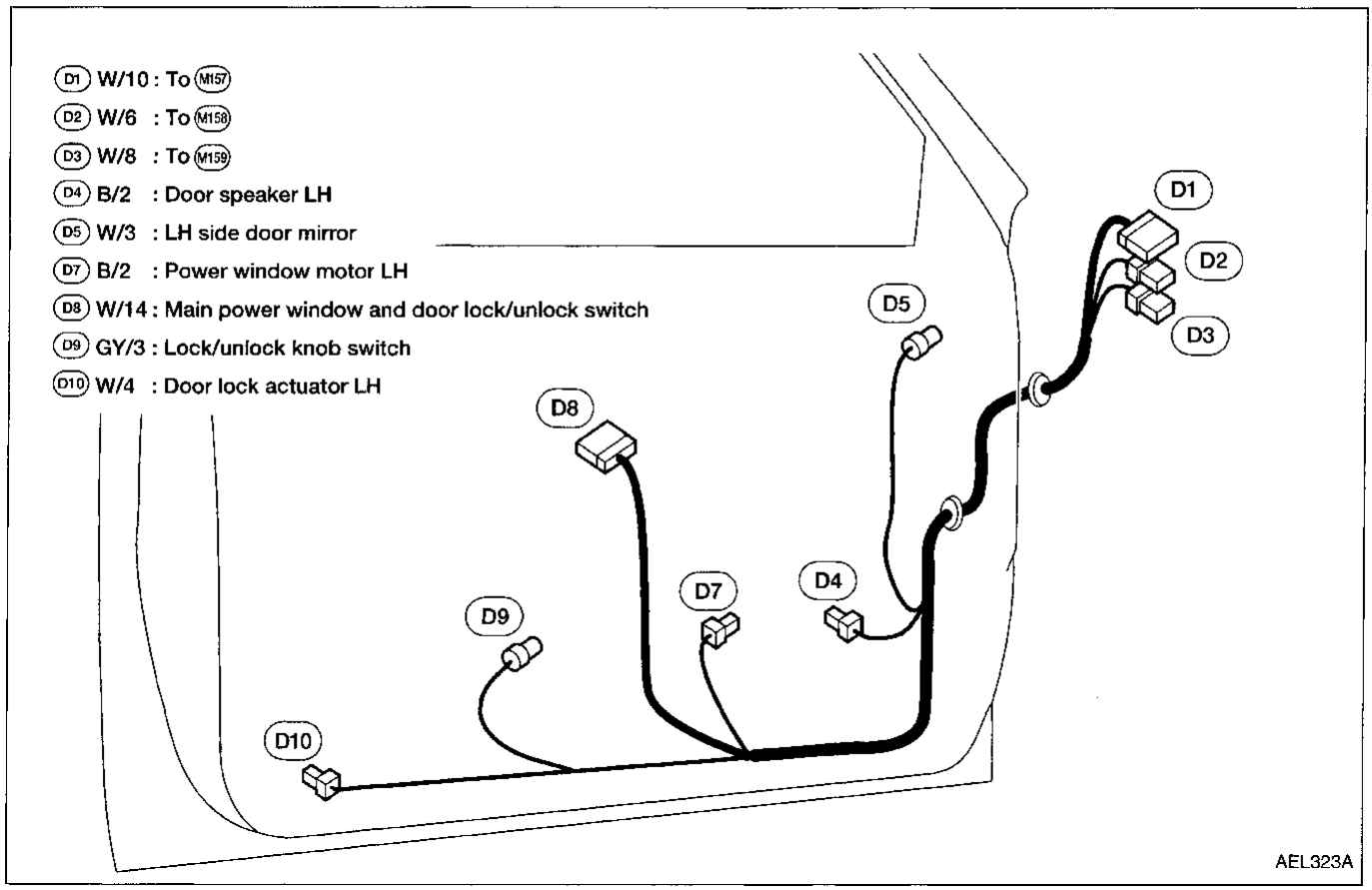

Door harness RH

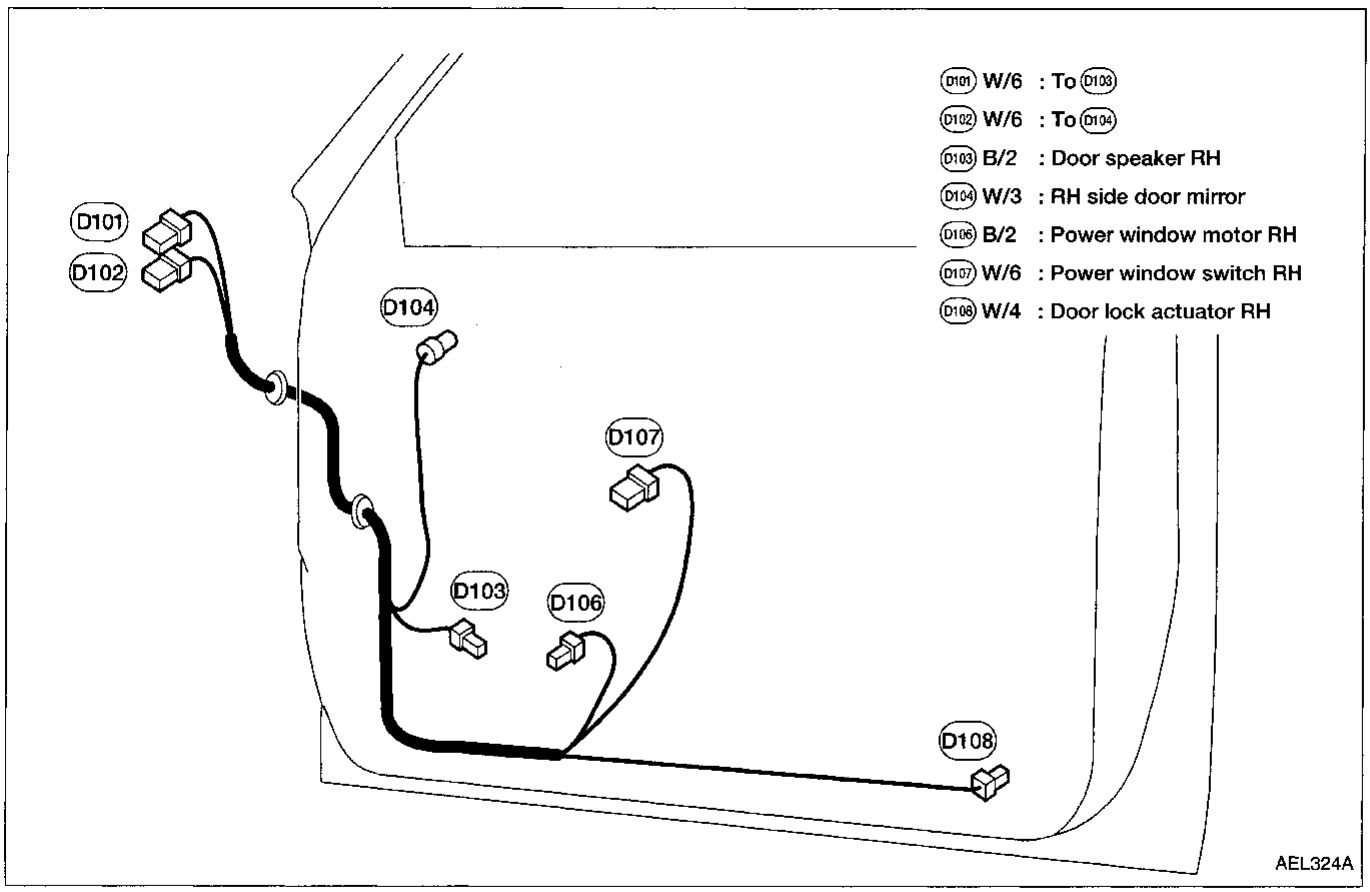

Room Lamp Harness

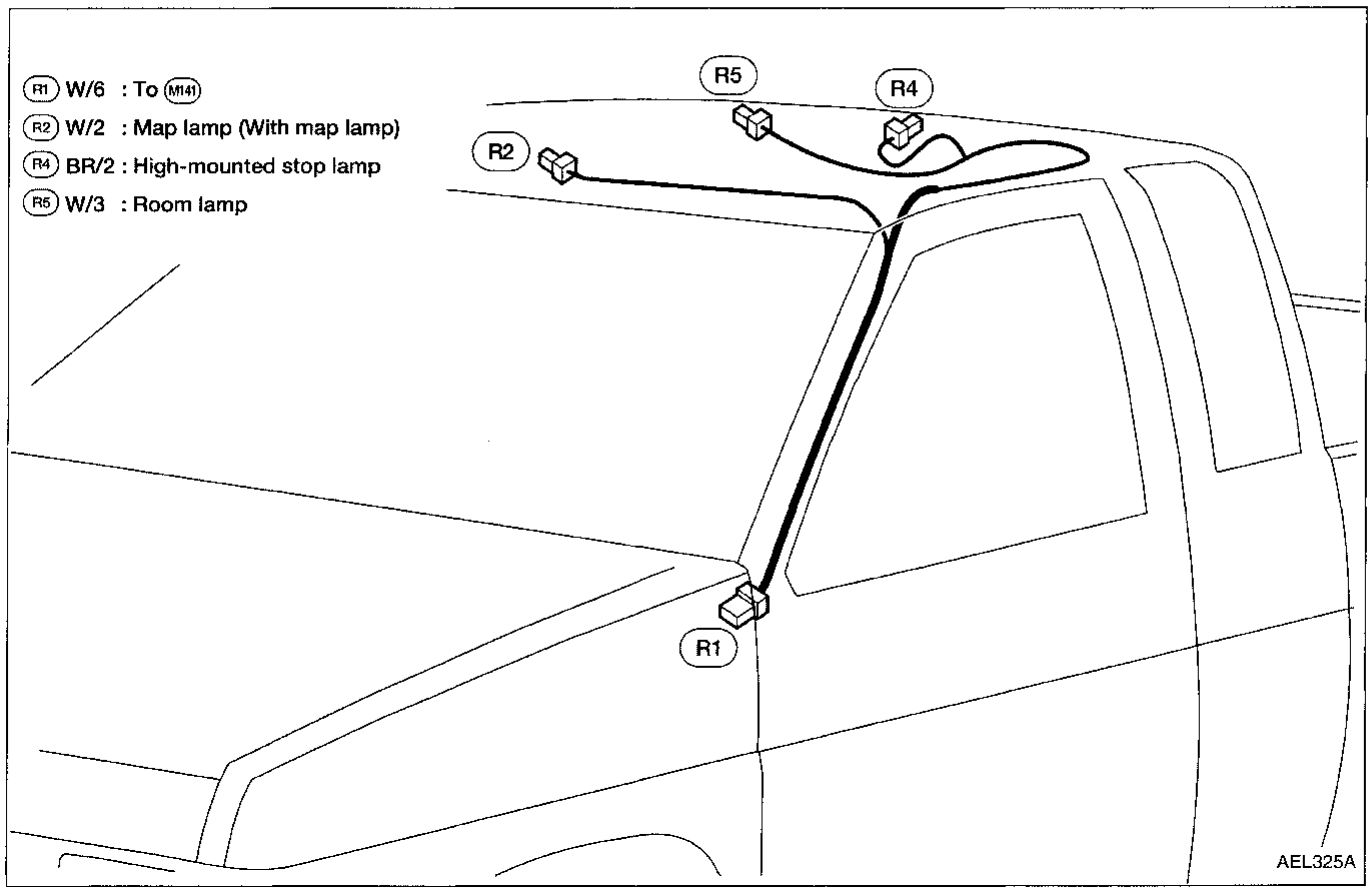

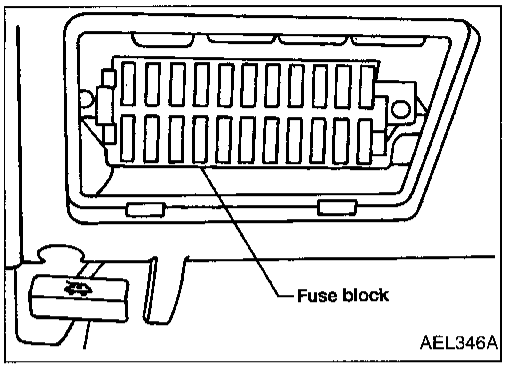

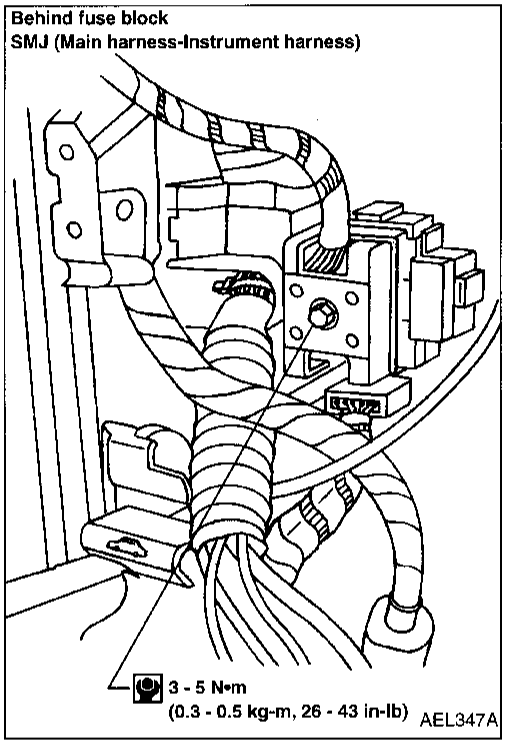

INSTALLATION

To install SMJ, tighten bolts until orange "fulltight" mark appears and then retighten to specified torque as required.

: 3 - 5 N·m
(0.3 - 0.5 kg-m, 26 - 43 in-lb)

CAUTION:
Do not overtighten bolt, otherwise, it may be damaged.

Terminal Arrangement

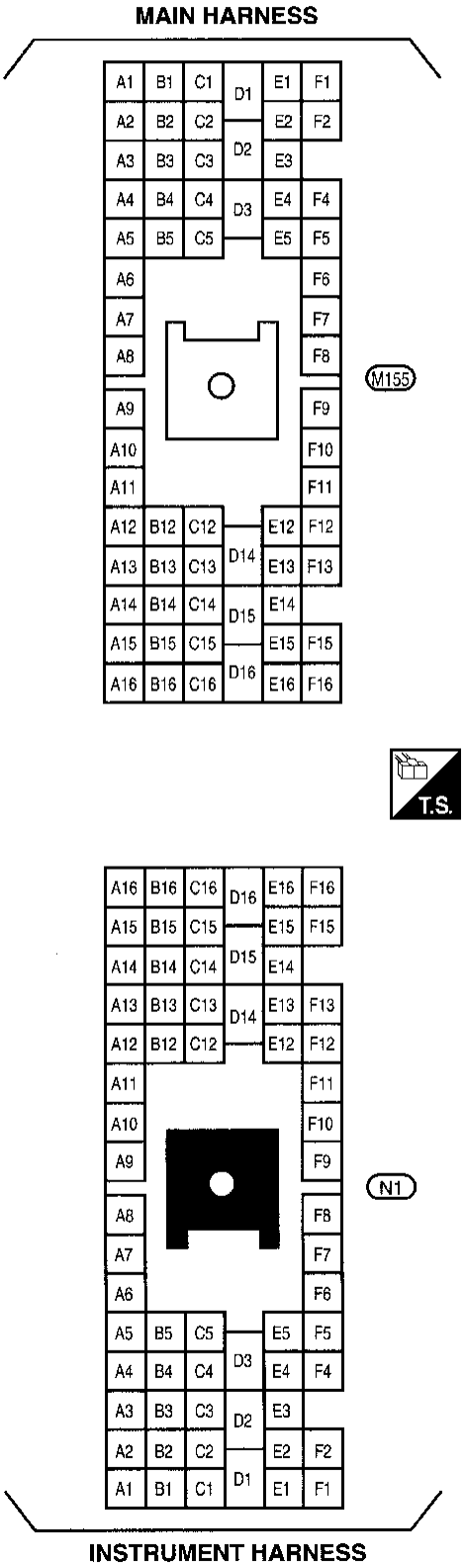

AEL344A

JOINT CONNECTOR (J/C)

Location

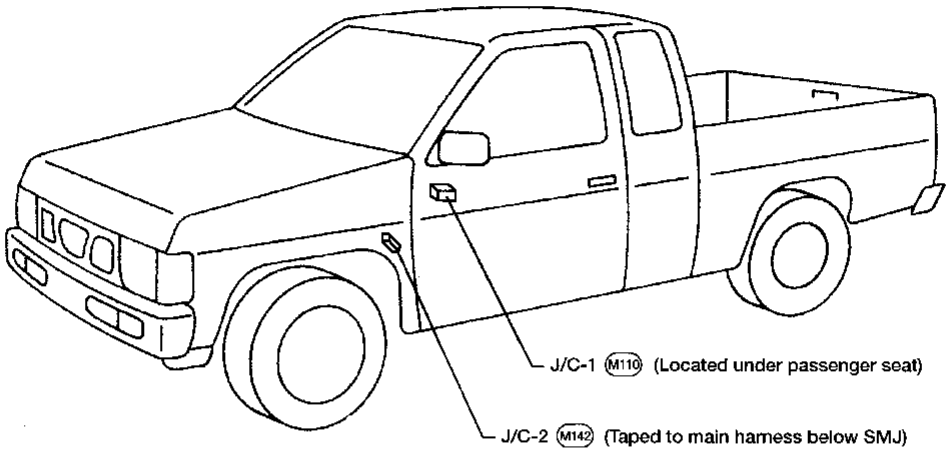

AEL342A

Terminal Arrangement

J/C-1

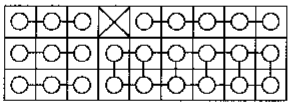

26	25	24		23	22	21	20	19
18	17	16	15	14	13	12	11	10
9	8	7	6	5	4	3	2	1

J/C-2

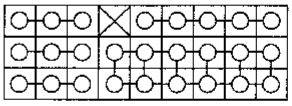

26	25	24		23	22	21	20	19
18	17	16	15	14	13	12	11	10
9	8	7	6	5	4	3	2	1

AEL343A

Fuse Arrangement

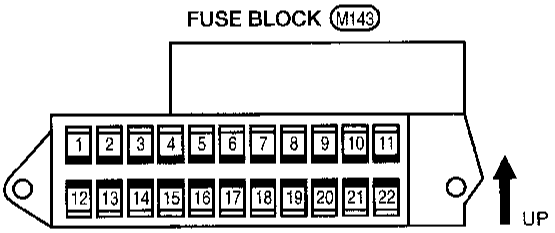

AIRBAG DIAGNOSIS SENSOR UNIT

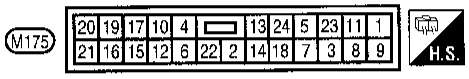

View from harness side

ABS CONTROL UNIT

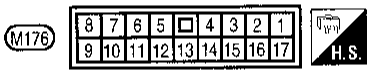

View from harness side

ECM (ECCS CONTROL MODULE)

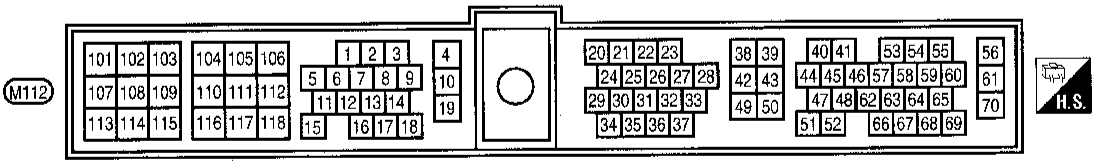

View from harness side

SECTION IDX

A

AAC/V - Wiring diagram EC-221
ABS - Wiring diagram BR-39
ABS (anti-lock brake system) BR-30
Absolute pressure sensor EC-100
A/C - Wiring diagram HA-31
A/C air flow HA-13
A/C component layout HA-12
A/C compressor clutch removal and installation HA-53
A/C compressor mounting HA-52
A/C compressor precaution HA-6
A/C compressor special service tool HA-6
A/C control linkage adjustment (manual A/C) HA-42
A/C control operation (manual A/C) HA-14
A/C diagnostic work flow (manual A/C) HA-15
A/C harness layout (manual A/C) HA-28
A/C HFC134a (R134a) system identification HA-3
A/C HFC134a (R134a) system introduction HA-3
A/C HFC134a (R134a) system precaution HA-4
A/C HFC134a (R134a) system service procedure HA-48
A/C HFC134a (R134a) system service tools HA-7
A/C HFC134a system service equipment precaution HA-9
A/C lubricant (R134a) HA-50
A/C operational check HA-16
A/C performance chart HA-24
A/C performance test diagnoses HA-22
A/C relay HA-42
A/C service data specification HA-57
A/C switch HA-41
A/C symptom chart (manual A/C) HA-18
A/C trouble diagnoses (manual A/C) HA-15
Accelerator control system FE-2
Accelerator wire adjustment FE-2
Air bag RS-10
Air bag disposal RS-13
Air bag precautions GI-2
Air bleeding for brake system BR-5
Air bleeding (hydraulic clutch) CL-6
Air cleaner filter replacement MA-12
Air conditioner - wiring diagram HA-31
Air conditioner cut control EC-18
Air conditioning - See A/C HA-11
Air control cable adjustment HA-43
Air flow meter - See Mass air flow sensor EC-93
Air mix door control linkage adjustment HA-43
Alternator EL-28
Angular tightening application EM-2
Antenna EL-109
Anti-lock brake system - See ABS BR-30
Anti-lock brake system - Wiring diagram BR-39
AP/SEN - Wiring diagram EC-100
ASCD - Wiring diagram EL-118
ASCD (automatic speed control device) EL-114
A/T - Wiring diagram AT-6
A/T mode switch AT-22
A/T removal and installation AT-40
A/T shift lock system AT-30
A/T shift lock system - Wiring diagram AT-31
A/T trouble diagnoses AT-12
Audio EL-102
AUDIO - Wiring diagram EL-104
Audio and A/C control removal and installation - See Instrument panel BT-10
Auto lock free running hub FA-18
Automatic speed control system - See ASCD EL-114
Automatic transmission fluid replacement MA-17
Automatic transmission number GI-37
Auxiliary air control (AAC) EC-221
Axle housing (rear) RA-5

B

Back window BT-28
BACK/L - Wiring diagram EL-49
Back-up lamp EL-49
Back-up lamp switch (M/T) MT-4
Ball joint front axle FA-44
Battery EL-15
Baulk ring (M/T) MT-8
Blower motor HA-41
Blower relay HA-42
Blower resistor HA-41
Body alignment BT-34
Body mounting BT-33
Boring/honing cylinder block EM-35
BPT valve EC-184
Brake booster BR-16
Brake control valve (Proportioning valve) BR-8
Brake fluid change BR-4
Brake fluid level MA-20
Brake fluid level and line check BR-4
Brake hydraulic line BR-6
Brake inspection MA-20
Brake lines and cables inspection MA-20
Brake master cylinder BR-13
Brake pedal BR-11
Bumper, front BT-6
Bumper, rear BT-7
BYPS/V - Wiring diagram EC-276

C

Cab body BT-32
Camshaft inspection EM-19
Camshaft position sensor (CMPS) EC-171
Canister - See EVAP canister EC-20

CANI/V - Wiring diagram EC-199
Cargo space GI-38
Center bearing assembly (propeller shaft) PD-11
Center bearing disassembly (propeller shaft) PD-10
CHARGE - Wiring diagram EL-26
Charging system EL-25
Chassis and body maintenance MA-16
CHIME - Wiring diagram EL-84
Cigarette lighter EL-101
Circuit breaker EL-11
CKPS - Wiring diagram EC-166, EC-262
Clearance lamp EL-50
Clock EL-101
Closed loop control EC-134
Closed throttle position switch EC-226
Clutch cover CL-13
Clutch damper CL-9
Clutch disc CL-12
Clutch fluid level MA-16
Clutch master cylinder CL-7
Clutch operating cylinder CL-8
Clutch pedal CL-4
Clutch release bearing CL-10
Clutch withdrawal lever CL-10
CMPS - Wiring diagram EC-171
Collision diagnosis RS-37
Combination lamp, front, removal and installation BT-6
Combination lamp, rear, removal and installation BT-7
Combination meter EL-66
Combination meter (needle type) EL-66
Combination meter removal and installation - See Instrument panel BT-10
Combination switch EL-32
Compression pressure EM-7
Compressor clutch removal and installation HA-53
Compressor mounting HA-52
Compressor precaution HA-6
Compressor special service tool HA-6
Connecting rod EM-34
Connecting rod bearing clearance EM-38
Connecting rod bushing clearance EM-39
Console box - See Instrument panel BT-10
CONSULT for ECCS EC-53
CONSULT general information GI-33
Control lever (M/T) MT-10
Control lever transfer TF-7
Control valve (A/T) AT-61
Converter housing installation AT-41
Coolant mixture ratio MA-9
Coolant replacement MA-11
Cooling circuit (engine) LC-7
Cooling fan LC-12
Counter gear (M/T) MT-8
Counter gear transfer TF-9
Coupling sleeve (M/T) MT-8
Crank angle sensor built into distributor - See Camshaft position sensor EC-171
Crankcase ventilation system - See positive crankcase ventilation EC-24
Crankshaft EM-36
Crankshaft position sensor (OBD) EC-166
Crankshaft position sensor (OBD) cog chipping... EC-262
Crash zone sensor RS-9
Cruise control - See ASCD EL-114
Cylinder block EM-32
Cylinder block boring EM-35
Cylinder head EM-16
Cylinder head bolt tightening EM-26

D

Data link connector for Consult EC-53
Daytime light system EL-38
Daytime running light - See Daytime light system EL-38
Defroster door control rod adjustment HA-43
Diagnosis sensor unit RS-9
Diagnostic trouble code (DTC) chart EC-75
Diagnostic trouble code (DTC) for ECCS OBD system EC-2
Differential carrier assembly PD-30, PD-52, PD-75, PD-96
Differential carrier disassembly PD-36, PD-58, PD-81
Differential gear oil replacement MA-19
Dimensions GI-38
Distributor ignition (DI) system EC-17
D/LOCK - Wiring diagram EL-144
Dome light - See Interior lamp EL-63
Door, front BT-9
Door glass BT-9
Door lock BT-9
Door mirror BT-30
Door trim BT-13
Drive belt inspection MA-10
Drive pinion diff. inspection PD-40, PD-62, PD-85
Drive pinion height PD-47, PD-70, PD-92
Drive plate runout EM-39
Drive shaft (front) FA-28
DTRL - Wiring diagram EL-42
Dual pressure switch HA-41

E

ECCS basic inspection EC-72
ECCS circuit diagram EC-9
ECCS component parts location EC-11
ECCS fail-safe system EC-76
ECCS on board diagnostic system EC-34

ECCS relay EC-89
ECCS symptom matrix chart EC-77
ECCS system diagram and chart EC-10
ECM input/output signal EC-83
ECTS - Wiring diagram EC-113, EC-124
EGR control (EGRC) - BPT valve EC-184
EGR control (EGRC) - solenoid valve EC-267
EGR control valve EC-182
EGR temperature sensor EC-271
EGRC1 - Wiring diagram EC-176
EGRC/V - Wiring diagram EC-267
EGR/TS - Wiring diagram EC-271
Electrical diagnoses GI-18
Electrical unit EL-150
Electrical units location EL-150
Engine compartment BT-35
Engine control module (ECM) EC-6
Engine coolant temperature sensor (ECTS) EC-113, EC-124
Engine oil filter replacement MA-13
Engine oil precautions GI-5
Engine oil replacement MA-13
Engine outer component parts EM-6
Engine removal EM-29
Engine room - See Engine compartment BT-35
Engine serial number GI-37
EVAP canister EC-20
EVAP canister purge control valve EC-199
EVAP canister purge volume control valve EC-281
EVAP canister vent control valve EC-207
EVAP control system pressure sensor EC-212
EVAP control system purge flow monitoring diagnosis EC-288
EVAP control system (small leak) diagnosis EC-189
EVAP shut valve EC-21
EVAP vapor lines inspection MA-15
Evaporative emission (EVAP) system EC-20
Exhaust gas recirculation (EGR) valve EC-176
Exhaust system FE-7
Exhaust system inspection MA-16
Extension tube diff PD-21
Exterior BT-17
Exterior lamp EL-49

F

Fan switch HA-41
Fast idle cam (FIC) inspection and adjustment EC-27
FICD - Wiring diagram EC-317
Final drive disassembly PD-36, PD-58, PD-81
Final drive pre-inspection PD-36, PD-58, PD-81
Final drive removal and installation PD-16
Finisher, rear panel BT-13
Floor trim BT-13
Flow charts GI-30
Fluids MA-8
Flywheel (clutch) CL-13
Flywheel runout EM-39
Fork rod (M/T) MT-10
Forward clutch AT-79
F/PUMP - Wiring diagram EC-309
Freeze frame data EC-36
FRO2 - Wiring diagram EC-129
FRO2/H - Wiring diagram EC-135
Front axle FA-15
Front bumper BT-6
Front combination lamp removal and installation BT-6
Front disc brake BR-19
Front door BT-9
Front drive shaft transfer TF-9
Front final drive disassembly (4WD) PD-18
Front final drive pre-inspection (4WD) PD-18
Front final drive removal and installation (4WD) PD-15
Front heated oxygen sensor (HO2S) heater EC-135
Front oxygen sensor (O2S) EC-129
Front seat BT-23
Front seat belt RS-3
Front suspension FA-34
Front washer EL-93
Front wiper EL-92
FUEL - Wiring diagram EC-148, EC-153
Fuel cut control (at no load & high engine speed) EC-19
Fuel filter replacement MA-12
Fuel gauge EL-70
Fuel injection system EC-148, EC-153
Fuel injector EC-303
Fuel line inspection MA-12
Fuel precautions GI-6
Fuel pressure check EC-25
Fuel pressure regulator EC-25
Fuel pressure release EC-25
Fuel pump EC-309
Fuel pump and gauge FE-6
Fuel pump relay EC-312
Fuel system FE-3
Fuel tank vacuum relief valve EC-21
Fuel temperature sensor EC-158
Fuse EL-11
Fuse block ..... Foldout page
Fusible link EL-11

G

Garage jack and safety stand GI-40
Gauges EL-65
Gears (M/T) MT-8
Generator EL-28
Generic scan tool (GST) EC-66

Glass BT-9
Governer valve assembly AT-72
Grease MA-8
Ground clearance GI-38
Ground distribution EL-12

H

Harness connector EL-3
Harness layout EL-152
Hazard warning lamp EL-52
Headlamp EL-35
Headlamp aiming control EL-47
Headlining - See Roof trim BT-15
Heated oxygen sensor (HO2S) EC-129
Heated oxygen sensor (HO2S) (front) EC-129
Heated oxygen sensor (rear) EC-139
HEATER - Wiring diagram HA-30
Heater system - Wiring diagram HA-30
Height (Dimensions) GI-38
HFC134a (R134a) system identification HA-3
HFC134a (R134a) system introduction HA-3
HFC134a (R134a) system precaution HA-4
HFC134a (R134a) system service procedure HA-48
HFC134a (R134a) system service tools HA-7
HFC134a system service equipment precaution HA-9
High clutch AT-77
H/LAMP - Wiring diagram EL-36
Hood BT-6
Horn EL-101
HORN - Wiring diagram EL-101
How to erase DTC for ECCS OBD system EC-43
Hydraulic lash adjuster inspection EM-28

I

IACV-AAC valve inspection EC-225
IACV-FICD solenoid valve EC-317
IATS - Wiring diagram EC-107
Idle air control valve (IACV) EC-221
Idle mixture ratio EC-28
Idle speed EC-28
Ignition coil EC-261
Ignition timing EC-28
Ignition wire inspection EC-165
IGN/SG - Wiring diagram EC-256
ILL - Wiring diagram EL-60
Illumination EL-58
Inhibitor switch AT-23, EC-232
INJECT - Wiring diagram EC-303
Injector EC-305
Injector removal and installation EC-26
Instrument panel BT-10
Intake air temperature sensor EC-107
Intake door control linkage adjustment HA-43
Intake manifold EM-6
Interior BT-13
Interior lamp EL-58
INT/L - Wiring diagram EL-63

J

Jacking points GI-39
Joint connector (J/C) ..... Foldout page
Journal bearing assembly (propeller shaft) PD-12
Journal bearing disassembly (propeller shaft) PD-11
Jump seat BT-24

K

Knuckle spindle FA-25

L

Leaf spring (rear) RA-10
Length (Dimensions) GI-38
License lamp EL-50
Lifting points GI-39
Limited slip diff. adjustment PD-65, PD-88
Limited slip diff. assembly PD-43, PD-67, PD-89
Limited slip diff. disassembly PD-42, PD-63, PD-86
Limited slip diff. inspection PD-42, PD-64, PD-87
Line pressure test (A/T) AT-27
Liquid gasket application EM-2
Location of electrical units EL-150
Lock, door BT-9
Low and reverse brake AT-83
LSV (Load sensing valve) BR-9
Lubricant (R134a) A/C HA-50
Lubricants MA-8
Lubrication circuit (engine) LC-4
Lubrication-locks, hinges and hood latches MA-22

M

MAFS - Wiring diagram EC-93
Magnet clutch HA-53
MAIN - Wiring diagram EC-89
Main drive gear (M/T) MT-8
Main gear transfer TF-9
Mainshaft (M/T) MT-8
Mainshaft transfer TF-9
Maintenance MA-3
Maintenance (engine) MA-10
Manual lock free running hub FA-17
Manual steering gear ST-14

Manual transmission number GI-37
Manual transmission oil replacement MA-16
Map lamp EL-63
MAP/BARO switch solenoid valve EC-237
Mass air flow sensor (MAFS) EC-93
Master cylinder (brake) BR-13
Master cylinder (clutch) CL-7
Meter EL-65
METER - Wiring diagram EL-68
MIL & Data link connectors circuit EC-321
MIL/DL - Wiring diagram EC-321
MIRROR - Wiring diagram EL-112
Mirror, door BT-30
Mirror, out side BT-30
Misfire EC-162
Mode door control linkage adjustment HA-43
Model variation GI-34
Molding - See Exterior BT-17
M/T overhaul MT-7
M/T removal and installation MT-5
Mud guard - See Exterior BT-17
Multiport fuel injection (MFI) system EC-15
Multiport fuel injection precautions GI-6

N

Neutral position switch EC-232
Neutral position switch (M/T) MT-4

O

Oil change (capacity) MA-8
Oil change (interval) MA-6
Oil pan (engine) EM-8
Oil pressure (engine) LC-5
Oil pressure relief valve (engine) LC-6
Oil pump (A/T) AT-57
Oil pump (engine) LC-5
Oil pump regulator valve (engine) LC-6
Oil seal replacement (engine) EM-14
Oil seal replacement (front final drive 4WD) PD-13
Oil seal replacement (front of final drive) PD-13
Operating cylinder (clutch) CL-8
Out side mirror BT-30
Overdrive control switch AT-22
Overrun clutch AT-79
Oversize piston EM-35
Oxygen sensor (O2S) (front) EC-129

P

Pantograph jack GI-39
Parking brake control BR-28
Parking lamp EL-50
Park/Neutral position switch EC-232
PCV filter replacement MA-15
PCV (positive crankcase ventilation) EC-24
PGC/V - Wiring diagram EC-281
Pilot bushing replacement EM-41
Pinion bearing preload diff. PD-25
Pinion gear height diff. PD-25, PD-47, PD-70, PD-92
Piston assembly EM-39
Piston pin inspection EM-33
Piston ring inspection EM-34
Piston to bore clearance EM-35
POWER - Wiring diagram EL-7
Power door lock EL-141
Power door mirror EL-112
Power steering fluid level ST-5, MA-21
Power steering gear ST-20
Power steering hydraulic pressure ST-8
Power steering oil pressure switch EC-313
Power steering oil pump ST-35
Power steering system bleeding ST-6
Power supply routing EL-6
Power transistor EC-261
Power transistor & ignition coil EC-256
Power window EL-135
Precautions (General) GI-3
PRE/SE - Wiring diagram EC-212
Pressure plate - See Clutch cover CL-13
Pressure test (A/T) AT-27
Propeller shaft PD-7
Propeller shaft inspection MA-18
Propeller shaft on vehicle service PD-9
Propeller shaft vibration PD-9
PST/SW - Wiring diagram EC-313

R

R134a - See HFC134a HA-3
Radiator LC-11
Radiator fan - See Cooling fan LC-12
Radio - See Audio EL-102
Rear axle RA-5
Rear axle (drum brake type) RA-3
Rear body BT-32
Rear bumper BT-7
Rear combination lamp removal and installation BT-7
Rear cover packing replacement diff. PD-14
Rear drum brake BR-24
Rear heated oxygen sensor (HO2S) EC-139
Rear heated oxygen sensor (HO2S) heater EC-143
Rear panel finisher BT-13
Rear seat belt RS-3
Rear side window BT-29
Rear suspension RA-9
Rear wheel anti-lock brake system (R-ABS) BR-30

Rear window BT-28
Refrigerant connection precaution HA-5
Refrigerant discharging evacuating charging HA-48
Refrigerant general precaution HA-4
Refrigerant lines HA-47
Refrigeration cycle HA-11
Release bearing (clutch) CL-10
Resistor EC-261
Reverse clutch AT-73
Reverse gear (M/T) MT-8
Reverse idler shaft (M/T) MT-8
Reverse lamp switch (M/T) - See Back-up lamp switch (M/T) MT-4
Ring gear diff. inspection PD-40, PD-62, PD-85
Road wheel size GI-38
Roof trim BT-15
Room lamp EL-63
Room lamp - See Interior lamp EL-63
Rotor disc (front) FA-24
RRO2 - Wiring diagram EC-139
RRO2/H - Wiring diagram EC-143

S

SAE J1930 terminology list GI-45
Screw jack GI-39
Seal - See Exterior BT-17
Seat belt, front RS-3
Seat belt inspection MA-23
Seat belt, rear RS-3
Seat, front BT-23
Self-diagnostic results EC-47
SHIFT - Wiring diagram AT-31
Shift control (M/T) MT-10
Shift control (TF) TF-10
Shift fork (M/T) MT-10
Shift lock system AT-30
Shift schedule AT-14
Shock absorber (front) FA-36
Shock absorber (rear) RA-10
Side bearing preload diff. PD-46, PD-69
Side bearing preload (front final drive 4WD) PD-24
Side shaft diff. PD-21
Side trim BT-13
Side window - See Rear side window BT-29
SMJ (super multiple junction) ..... Foldout page
Spare tire size GI-38
Spark plug replacement MA-14
Speedometer EL-72
Spiral cable RS-10
Spot lamp EL-63
SRS - See Supplemental Restraint System RS-6
SRS - Wiring diagram RS-20
SRS Trouble diagnoses RS-17
S/SIG - Wiring diagram EC-306
Stabilizer bar (front) FA-39
Stall test (A/T) AT-25
Standardized relay EL-4
START - Wiring diagram EL-20
Start signal EC-306
Starter EL-22
Starting system EL-19
Steering gear and linkage inspection MA-21
Steering gear oil level MA-21
Steering knuckle FA-25
Steering linkage ST-38
Steering switch EL-34
Steering wheel and column ST-10
Steering wheel play ST-7
Steering wheel turning force ST-7
Stop lamp EL-50
Striking rod (M/T) MT-10
Sunroof BT-25
Supplement restraint system - Wiring diagram RS-20
Supplemental Restraint System RS-6
S/VCSW - Wiring diagram EC-251
Swirl control valve control solenoid valve EC-243
Swirl control valve control vacuum check switch EC-251
SWL/V - Wiring diagram EC-243
SW/V - Wiring diagram EC-237
Symbols and abbreviations GI-8
Synchronizer (M/T) MT-8
System readiness test (SRT) code EC-36

T

Tachometer EL-71
Tail lamp EL-50
TAIL/L - Wiring diagram EL-50
Tank fuel temperature sensor EC-158
TCV - Wiring diagram EC-295
Temperature control cable and linkage adjustment HA-43
Tension rod (front) FA-42
TFTS - Wiring diagram EC-158
Thermal protector HA-42
Thermo control amp HA-42
Thermostat LC-9
Three way catalyst EC-186
Three way catalyst precautions GI-6
Throttle bodies EM-6
Throttle chambers EM-6
Throttle drum adjustment FE-2
Throttle position sensor adjustment EC-72
Throttle position sensor (TPS) EC-118
Throwout bearing - See Clutch release bearing CL-10
Tie-rod ST-38
Tie-rod ball joints ST-38
Tightening torque of standard bolts GI-44

Timing chain EM-10
Tire rotation MA-19
Tire size GI-38
Tooth contact diff. PD-51, PD-74, PD-95
Tooth contact (front final drive 4WD) PD-29
Torque converter clutch solenoid valve AT-20
Torque converter installation AT-41
Torque convertor clutch solenoid valve EC-295
Torsion bar spring FA-36
Tow truck towing GI-42
Towing point GI-43
TPS - Wiring diagram EC-118
TP/SW - Wiring diagram EC-226
Transfer case TF-8
Transfer fluid replacement MA-18
Transfer oil replacement MA-18
Transfer overhaul TF-8
Transfer removal and installation TF-6
Transfer serial number GI-37
Transmission case (M/T) MT-7
Transmission serial number GI-37
Tread-FR&RR (Dimensions) GI-38
Trim BT-13
TURN - Wiring diagram EL-54
Turn signal lamp EL-52
Two trip detection logic EC-34
Two-pole lift GI-41

U

Under body BT-36
Upper link (front susp.) FA-40

V

Vacuum cut valve EC-280
Vacuum cut valve bypass valve EC-276
Vacuum hose (brake system) BR-18
Vacuum hose drawing (ECCS) EC-13
Valve clearance EM-21
Valve guide EM-21
Valve seat EM-22
Valve spring EM-24
Vehicle identification number GI-36
Vehicle recovery (freeing a stuck vehicle) GI-43
Vehicle speed sensor (VSS) EC-217
Ventilator door control rod adjustment HA-42
VENT/V - Wiring diagram EC-207
Viscosity number (SAE) MA-9
VSS - Wiring diagram EC-217

W

WARN - Wiring diagram EL-79
Warning chime EL-83
Warning lamps EL-76
Washer, front EL-93
Water cock control rod adjustment HA-43
Water pump LC-8
Water temperature gauge EL-69
Weatherstrip - See Exterior BT-17
Wheel alignment (front) FA-8
Wheel balance MA-19
Wheel bearing (front axle) FA-6
Wheel bearing (rear) RA-4
Wheel hub (front) FA-24
Wheel sensors (ABS) BR-30
Wheel size GI-38
Wheelbase (Dimensions) GI-38
Wide open & closed throttle position (CTP) switch EC-226
Width (Dimensions) GI-38
WINDOW - Wiring diagram EL-138
Window antenna EL-109
Window, back BT-28
Window, door BT-9
Window, rear BT-28
Window, rear side BT-29
Window, side - See Rear side window BT-29
Windshield BT-26
Windshield washer - See Front washer EL-93
Windshield wiper - See Front wiper EL-92
WIPER - Wiring diagram EL-94
Wiper and washer EL-92
Wiper, front EL-92
Wiring diagrams GI-9
Withdrawal lever (clutch) CL-10
Wrist pin - See Piston pin inspection EM-33