YAMAHA

SERVICE MANUAL

FZ-16

21C-F8197-EO

Downloaded from www.Manualslib.com manuals search engine

FZ-16
SERVICE MANUAL

All rights reserved.
Any reproduction or unauthorized use
without the written consent of
YAMAHA MOTOR INDIA PVT. LTD.
is strictly prohibited.

Downloaded from www.Manualslib.com manuals search engine

ATTENTION

This manual has been prepared by IYM, mainly for use by dealers and their mechanics qualified. It is not possible to gather in a manual all the knowledge of a mechanic. Any person carrying out maintenance and repairs on Yamaha vehicles should Basic knowledge of mechanics and techniques needed to repair this type of vehicles. The repairs and maintenance performed by a person who lacks such knowledge that the vehicle will probably not be secure and fit for use.
Yamaha Motor India Pvt Ltd. is continually striving to improve all its models. All Yamaha authorized dealers will be informed of any amendments and changes substantial occur in specifications or procedures, and these are included in future editions of this manual, when necessary.

NOTE:
Designs and specifications subject to change without notice.

IMPORTANT INFORMATION ABOUT THIS MANUAL
Particularly important information in this manual are distinguished by the following symbols:

⚠ Safety alert symbol means ATTENTION! BE ALERT! YOUR SAFETY IS INVOLVED!

⚠WARNING A WARNING indicates a hazardous situation that could cause death or serious injury to the vehicle operator, a bystander or a person find inspecting or repairing the vehicle.

CAUTION A CAUTION indicates special precautions to be taken to avoid damage to the vehicle.

NOTE: A NOTE provides key information to obtain or clarify procedures.

Downloaded from www.Manualslib.com manuals search engine

HOW TO USE THIS MANUAL

This manual is intended as a practical tool, easy to read, a book of reference for the mechanic. Includes explanations of all installation, removal, disassembly, assembly, repair, and testing procedures are set out in individual steps in sequential order.

- The manual is divided into chapters and each chapter is divided into sections. The section title current "1" appears at the top of each page.
- Sub-headings in the "2" appear in smaller print than the section title.
- To help identify parts and clarify procedure steps, there are diagrams exploited "3"
- at the beginning of each of the sections of removal and disassembly.

- The numbers "4" are given in the order of jobs in diagrams exploited. A number indicates a disassembly step.

- Symbols "5" indicates the parts to be lubricated or replaced. See "SYMBOLS".

- A table of work instructions "6" accompanies the exploded diagram, providing the order of work, names of parts, notes in jobs, etc..

- Work "7" that require more information (such as special tools and technical data) are described in sequential order.

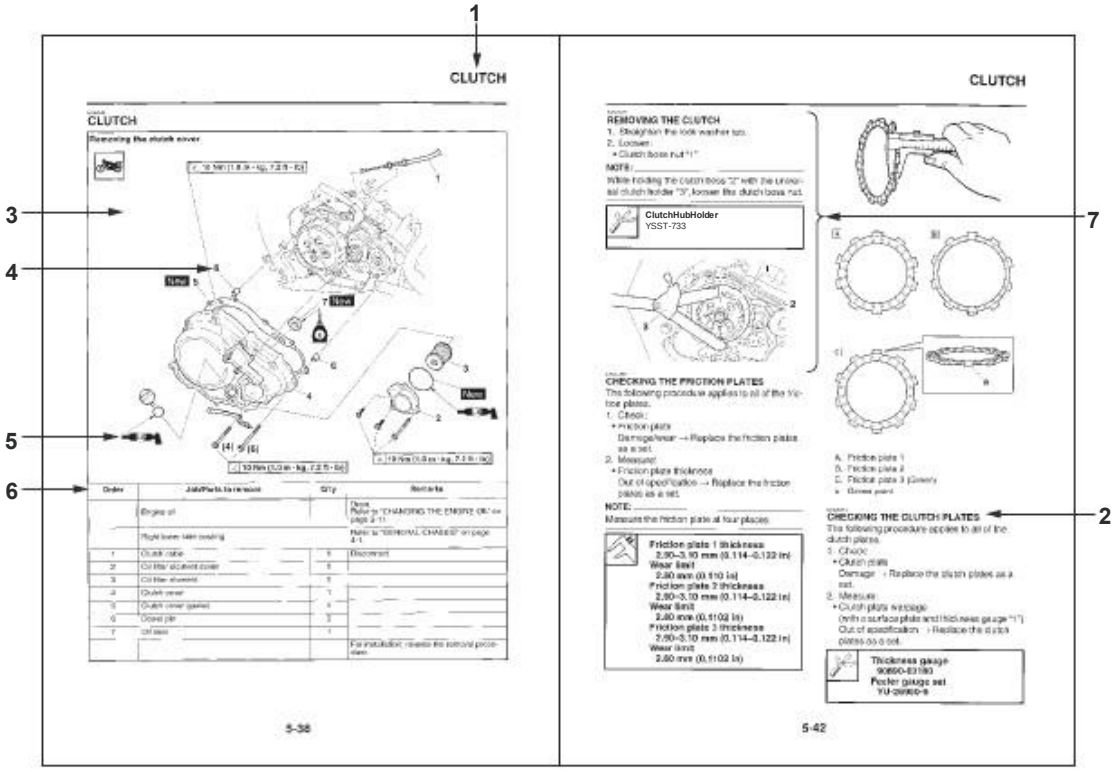

Downloaded from www.Manualslib.com manuals search engine

SYMBOLS

The following symbols are used in this manual to facilitate understanding.

NOTE:

The following symbols are not relevant to each vehicle.

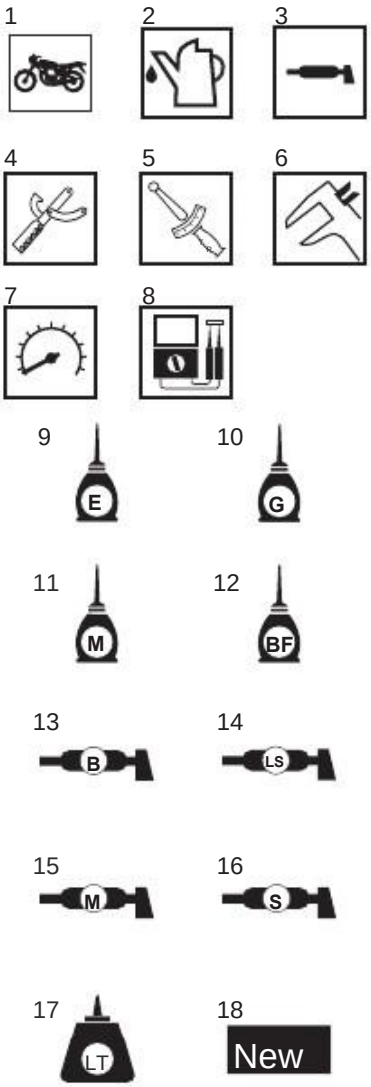

1. Serviceable with engine mounted
2. Liquid fill
3. Lubricant
4. Special Tool
5. Torque
6. Wear limit, tolerance
7. Engine speed
8. Electrical data
9. Motor oil
10. Gear oil
11. Molybdenum disulfide oil
12. Brake Fluid
13. Bearing grease
14. Grease with lithium soap base
15. Molybdenum disulfide grease
16. Silicone grease
17. Apply locking agent (LOCTITE ®).
18. Replace the new one.

Downloaded from www.Manualslib.com manuals search engine

TABLE OF CONTENTS

GENERAL INFORMATION	1
SPECIFICATIONS	2
INSPECTIONS NEWSPAPERS AND ADJUSTMENTS	3
CHASSIS	4
ENGINE	5
CARB	6
ELECTRICAL	7
TROUBLESHOOTING	8

Downloaded from www.Manualslib.com manuals search engine

GENERAL INFORMATION

IDENTIFICATION OF MOTORCYCLE ..... 1-1 .....
VEHICLE IDENTIFICATION NUMBER 1-1
ENGINE SERIAL NUMBER ..... 1-1 .....

LCD METER 1-2

INFORMATION **IMPORTANT ..... 1-3 .....**
PREPARATION FOR REMOVAL AND DISASSEMBLY 1-3
REPLACEMENT PARTS ..... 1-3 .....
PACKING, OIL SEALS RINGS I 1-3
LOCK WASHERS / LOCKNUTS
AND PINS ..... 1-3 .....
BEARINGS AND OIL SEALS ..... 1 - 4
RING CLOSING ..... 1-4 .....

INSPECTION CONNECTION ..... 1-5 .....

SPECIAL TOOLS ..... 1-6 .....

Downloaded from www.Manualslib.com manuals search engine

IDENTIFICATION

VEHICLE IDENTIFICATION NUMBER (CHASSIS NUMBER)

The vehicle identification number "1" is affixed to the chassis.

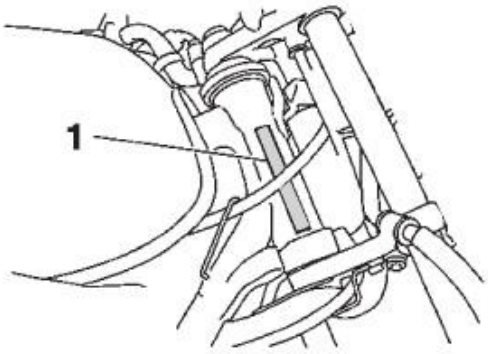

ENGINE SERIAL NUMBER

The engine serial number "1" is stamped in the crankcase.

NOTE:

Designs and specifications are subject to change without notice.

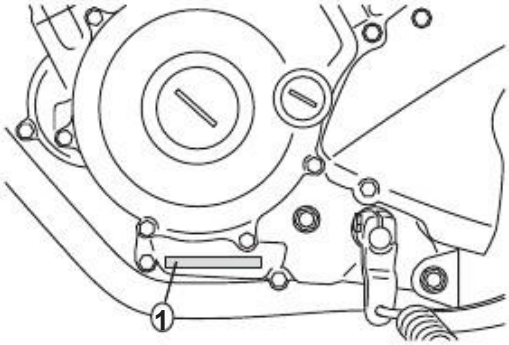

Downloaded from www.Manualslib.com manuals search engine

MULTIFUNCTION DISPLAY

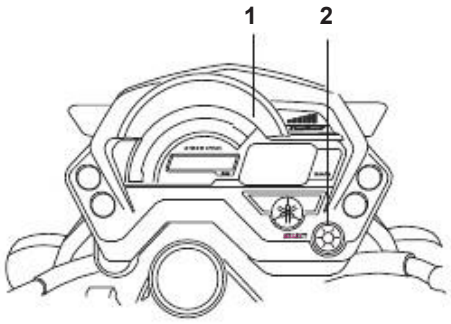

1. Multi-function display
2. "SELECT" button (select)

The Multi-function display is equipped with the following:

- A speedometer (which shows the speed offset)
- An odometer (which shows the total distance traveled)
- An odometer (indicating the distance traveled since it was in last reset)
- A fuel gauge (indicating the available fuel level within the anque fuel)

NOTE

Be sure to turn the key to "ON" before using the "SELECT".

TOTAL ODOMETER MODE
Odometer.
A light pulse (less than one second) on the button "SELECT" the display changes between odometer and tripmeter.

Fuel Gauge

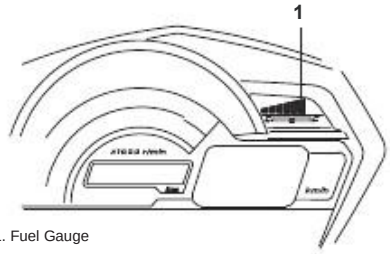

1. Fuel Gauge

The fuel gauge indicates the amount of fuel in the fuel tank.
Segments fuel meter disappear towards "E" (Empty) as fuel level decreases. When the last segment of the fuel gauge starts flashing, refuel as soon possible.

Downloaded from www.Manualslib.com manuals search engine

IMPORTANT INFORMATION

PREPARING FOR THE REMOVAL AND DISASSEMBLY

1. Before you remove and disassemble, clean all dirt, mud, dust and material strangers.

2. Use only the proper tools and clean equipment.
See "TOOLS SPECIAL "on page 1-8.
3. When disassembling, always keep together the pieces of the same whole. This includes gears, cylinders, pistons and other working parts "grouped" by the use normal. The parts must always grouped be reused or replaced altogether.

4. During disassembly, clean all pieces and place them in trays in the order of removal. This will speed up assembly and allow the correct assembly of all parts
5. Keep all parts away from any fire source.

REPLACEMENT PARTS

Use only genuine Yamaha parts in all changes. Use oil and grease recommended by Yamaha, for all

.

lubrication services. Other brands may be similar in function and appearance, but inferior in quality.

PACKING, OIL SEALS AND O RINGS

1. When assembling the engine, replace all gaskets, oil seals and O-rings. All surfaces of packaging, seal edges Oil and O-rings must be cleaned.

2. During assembly, place the oil specified on all parts and bearings carefully and lubricate the edges of the oil them with grease.

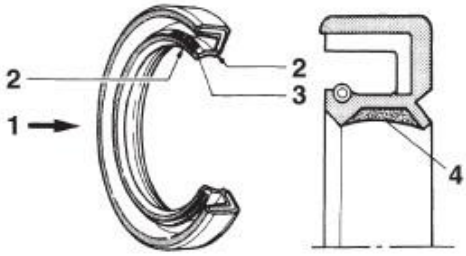

WASHER SAFETY LOCKNUTS AND PINS

After disarming, replace all washers safety pins and "1". After which set screw or nut to the torque specified, fold the side edges against side of the screw or nut.

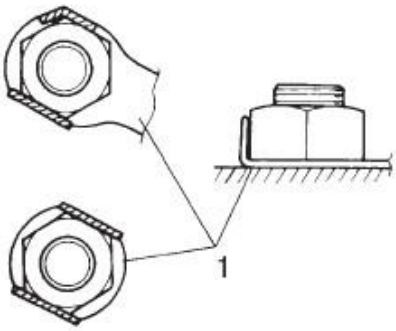

Downloaded from www.Manualslib.com manuals search engine

BEARINGS AND OIL SEALS
Assemble the bearings and oil seals so that the mark of the manufacturer or the numbers are visible. When installing oil seals "1", lubricate the edges of oil seals with a thin layer of grease lithium soap base. In the bearings, apply oil, if requested.

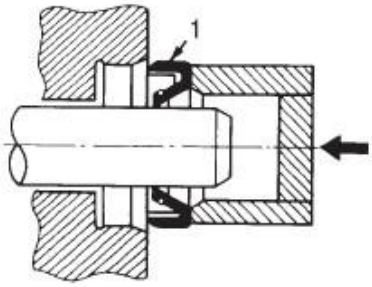

PREACAUCIÓN

Do not turn the bearing with compressed air, and this will damage the surfaces

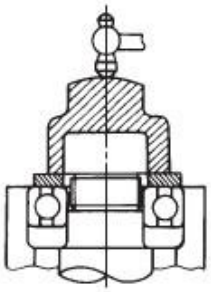

LOCKING RING
Before joining, check carefully All sealing rings and replace those are damaged or twisted. Always replace sealing rings piston pin, after a use. When installing a sealing ring "1", make sure the sharp corners "2" are placed on the opposite side "3" to the force received by ring closure.

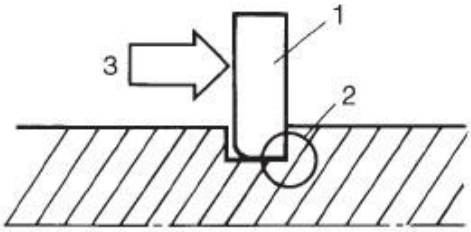

Downloaded from www.Manualslib.com manuals search engine

INSPECTION OF CONNECTIONS

Check the cables, couplers and connectors stains, oxidation, humidity, etc..

1. Disconnect:
   - •Cable
   - •Coupler
   - •Connector
2. Check
   - •Cable
   - •Coupler
   - •Connector

Moisture ⟶Dry air-jet

Oxidation / patches ⟶Connect and disconnect several times.

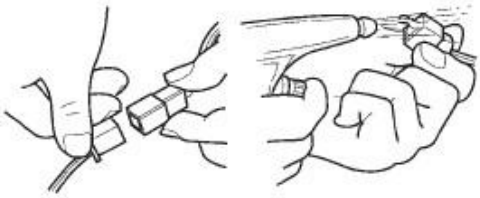

3. Check:
   - •All connections

     Loose connection ⟶Properly connect

NOTE:

If you crimp the pin "1" from the terminal, fold upwards.

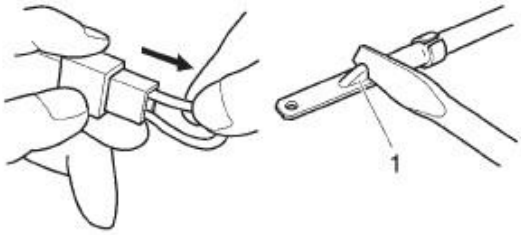

4.Connect:
   - • Cable
   - •Coupler
   - •Connector

NOTE:

Make sure all connections are tight.

5. Check:
   - •Continuity

     (With the meter)

NOTE:

- If there is no continuity, clean the terminals
- When checking the wire harness, perform steps (1) to (3).
- As a quick fix, use a spray cleaner contacts, is available in most parts stores.

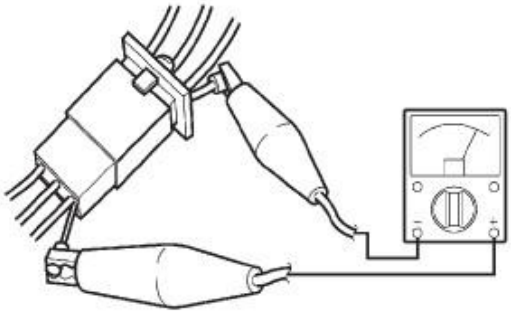

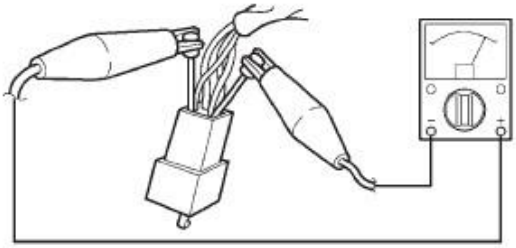

Downloaded from www.Manualslib.com manuals search engine

SPECIAL TOOLS

Special tools shown below, are required for assembly and adjustment precise. Use only the appropriate special tools, which will help to prevent damage by the use of inappropriate tools or improvised techniques.

Tool name / Tool No.	Illustration
Tappet screw holder YSST-706 This tool is used to hold the screw taque to adjust the valve clearance	
Tappet adjusting wrench YSST-806A This tool is used to loosen and tighten the nut the tappet	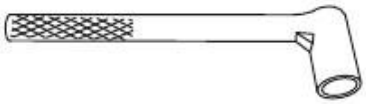
Thickness gauges YSST-815 This tool is used to adjust the valve clearance a motor	
Adjuster rear shock YSST-821 This tool is used for adjusting the preload Rear shock	
Magnet Holder YSST-601B This tool is used to hold the magnet to removing or installing the magneto securing nut and nut main gear	
Magneto Puller YSST-628 This tool is used to remove the magnet with the help of the magnet holder	

Downloaded from www.Manualslib.com manuals search engine

Tool name / Tool No.	Illustration
Tool to install the crankshaft spacer. (A) YSST-266 (B) YSST-267 These tools are use to install the crankshaft.	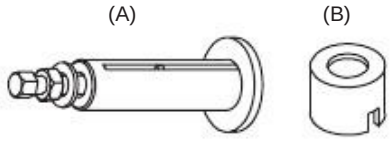
Tool to remove the crankshaft. YSST-265 This tool is used to remove the crankshaft from Crankcase	
Fixer clutch hub YSST-733 This tool is used to set the clutch hub while installing or removing the hub nut fastener clutch.	
Stroboscope lamp This instrument is used to check the time of lit.	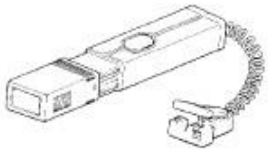
Gauge This instrument is used to measure the compression motor	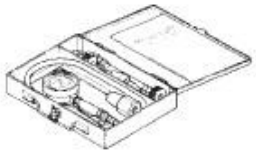
Scraper YSST-612 This tool is used to scrape the edge of the seal bonding surface of the crankcase.	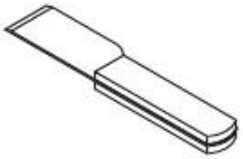
Valve spring compressor YSST-603 This tool is used to remove and install valve and the valve spring.	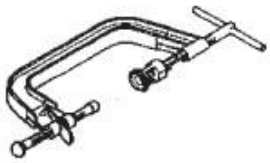

Downloaded from www.Manualslib.com manuals search engine

Tool name / Tool No.	Illustration
Adapter valve spring compressor YSST-803 A This tool is used to remove and install valve and the valve spring using YSST 603.	
Set pump pressure gauges vacuum / pressure This instrument is used to test and verify the vacuum the air induction system.	
Nut wrench direction YSST-721 This tool is used to loosen and tighten the nut direction.	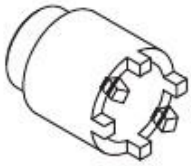
Key in T YSST-813 This tool is used to hold the plunger of the front fork to loosen or tighten the bolt Hex.	
Assembly tool oil seal Front fork YSST-875 This tool helps install the oil seal front fork.	
Dynamic spark tester This instrument is used to verify the efficiency of the spark of the spark plug.	

Downloaded from www.Manualslib.com manuals search engine

Tool name / Tool No.	Illustration
Multimeter ThEste instrument is used to check the circuits or electrical components.	
Yamaha Adhesive No. 1215 This adhesive is used in the contact surfaces, while assembling the covers # 1 and # 2 engine.	
Loctite Three Bond 1322 This adhesive is used to provide greater resistance to Torx screws for adjustment.	
Basis for piston YSST-604 This tool is needed to support the piston during assembly of the cylinder.	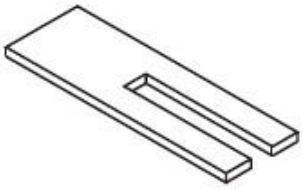
Crankshaft key cap YSST-625 This tool is used to remove / install the plug of the left cover of the crankcase # 1 (L.H).	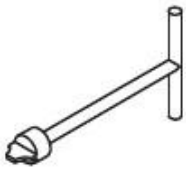

Downloaded from www.Manualslib.com manuals search engine

SPECIFICATIONS

GENERAL ..... 2-1 .....

ENGINE SPECIFICATIONS ..... 2-2 .....

CHASSIS SPECIFICATIONS ..... 2-9 .....

ELECTRICAL ..... 2-12 ....

TORQUE ..... 2-14 .....
ON GENERAL TORQUE 2-14
ENGINE TORQUE ..... 2-16 .....
CHASSIS TORQUE ..... 2-19 .....

LUBRICATION POINTS AND LUBRICANT TYPES 2-21

TABLES AND DIAGRAMS LUBRICATION SYSTEM 2-24
ENGINE LUBRICATION CHART 2-24 .....
LUBRICATION DIAGRAMS ..... 2-25 .....

CABLE GUIDED ..... 2-27 .....

Downloaded from www.Manualslib.com manuals search engine

GENERAL

GENERAL	
MODEL	
Model	21C1
Dimensions	
Total length	1973mm
Overall width	770mm
Overall heightl	1045mm
Seat Height	790mm
Wheelbase	1334mm
Ground clearance	160mm
Minimum turning radius	2340mm
Weight	
With gasoline and oil	135.0kg
Peak load	195.0kg

Downloaded from www.Manualslib.com manuals search engine

SPECIFICATIONS ENGINE

Engine	
Engine Type	4 stroke, air cooled SOHC
Displacement	153.0cm 3
Arrangement of cylinder	A cylinder leaning forward
Bore x stroke	58.0 x 57.9mm
Compression ratio	9.50:1
Compression pressure (at sea level)	1200kPa
Starting System	Electric Start, Kick starter (As the country)
Fuel	
Recommended fuel	Unleaded regular gasoline standard
Fuel tank capacity	12.0 L
Reserve capacity	1.4 L
Motor oil	
Wet system lubricaciónCárter	
TipoSAE20W50	
Recommended grade of motor oil YAMALUBE (Grade-SG)	
Number of motor oil	1.00 LCambio newspaper
Change total1.20 L	
Oil filter	
Type oil filter	Paper
Oil pump	
Type of oil pump	Trochoid
Clearance of the inner rotor to the outer rotor	Less than 0.15mm
Limit	0.20mm
Clearance of the outer rotor to the housing oil pump	0.13-0.19mm
Limit	0.15mm
Clearance of the housing of the oil pump to the inner rotor and outer rotor	0.06-0.11 mm
Limit	0.15mm

Downloaded from www.Manualslib.com manuals search engine

SPECIFICATIONS ENGINE

Spark plug (s)	
Manufacturer / Model	NGK / CPR8EA-9
Distance between electrodes	0.8-0.9mm
Head	
Volume	13.40-14.00cm ³
Maximum deformation	0.03mm

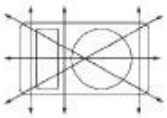

Camshaft	
Drive System	Chain drive (Left)
Dimensions of camshaft lobes	
Admission to	31,342 - 2mm 31.44
Limit	31.342mm
Admission B	25,166 - 25.26 6mm
Limit	25.136mm
Escape A	31,110 - 31.210mm
Limit	31.080mm
Escape B	25,096 - 25.19 6mm
Limit	25.066mm

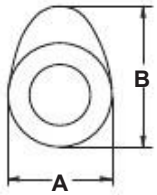

Strain limit 0.03 mm camshaft

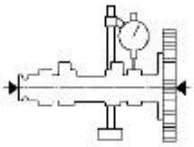

Downloaded from www.Manualslib.com manuals search engine

Supply Chain

Model	Silent chain
Tensioning System	Automatic

Rocker / Rocker

Inner diameter of the beam	9985-10.000mm
Limit	10.030mm
Outer diameter of the beam	9966-9.976mm
Limit	9.950mm

Valves, valve seats, valve guides

Valve clearance (cold)	
Admission	0.08-0.12mm
Exhaust	0.12-0.16mm
Valve dimensions	
Diameter of the valve head A (Admission)	27.90-28.10mm
Diameter of the valve head A (exhaust)	23.40-23.60mm

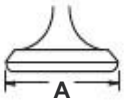

Face width of the valve B (Admission)	1538-2.138mm
Face width of the valve B (Escape)	1538-2.138mm

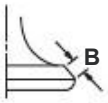

Width of the seat valve C (Admission)	0.90-1.10mm
Width of the seat valve C (Escape)	0.90-1.10mm

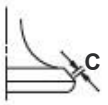

Thickness D of the valve margin (Admission) 0.50-0.90mm
Thickness D of the valve margin (Escape) 0.50-0.90mm

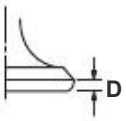

Diameter of the valve stem (Admission)	4975-4.990mm
Limit	4.950mm
Diameter of the valve stem (Escape)	4960-4.975mm
Limit	4.935mm
Internal diameter of the valve guide (Admission)	5,000-5.012mm
Limit	5.042mm
Internal diameter of the valve guide (Escape)	5,000-5.012mm
Limit	5.042mm
Clearance between the valve stem and the guide (Admission)	0.010-0.037mm

Downloaded from www.Manualslib.com manuals search engine

Limit	0.080mm
Clearance between the valve stem and guide (Escape)	0.025-0.052mm
Limit	0.100mm
Limit deformation of the valve stem	0.010mm

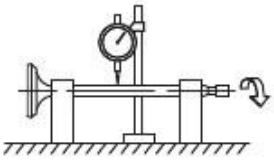

Valve spring

Free length (Admission)	39.40mm
Limit	37.40mm
Free length (Escape)	39.40mm
Limit	37.40mm
Installed length (Admission)	34.50mm
Installed length (Escape)	34.50mm
Elasticity of the spring constant K1 (Admission)	35.08N/mm
Elasticity of the spring constant K2 (Admission)	44.40N/mm
Elasticity of the spring constant K1 (Escape)	35.08 N / mm
Elasticity of the spring constant K2 (Escape)	44.40 N / mm
Force compression spring installed (Admission)	160-184 N
Force compression spring installed (Escape)	160-184 N
Inclination of the compression spring (Admission)	2.5 ° / 1.7 mm
Inclination of the compression spring (Escape)	2.5 ° / 1.7 mm

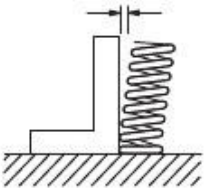

Thread direction (Admission)	Clockwise
Thread direction (Escape)	Clockwise

Cylinder

Diameter	58,000-58.010mm
Limit of taper	0.05mm
Limit ovalamiento	0.05mm

Piston

Tolerance between the piston and cylinder	0.020-0.035mm
Limit	0.15mm
Diameter D	53,970-53.985mm

Downloaded from www.Manualslib.com manuals search engine

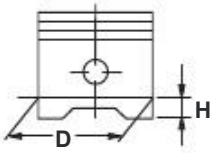

Deviation	0.25 mm
Direction of deviation	Admission Side
Diameter hole for the piston pin	15002-15013 mm
Limit	15043 mm
Outside diameter of piston pin	14995-15000 mm
Limit	14975 mm

Piston rings	
Top ring	
Ring type	Barrel
Dimensions (B × T)	0.80 x 2.30 mm

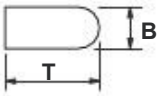

Distance between ends (installed)	0.10 to 0.25 mm
Limit	0.40 mm
Ring side clearance	0030-0065 mm
Limit	0.100 mm
Second Ring	
Ring type	Conical
Dimensions (B × T)	0.80 x 2.40 mm

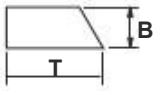

Distance between ends (installed)	0.10 to 0.25 mm
Limit	0.40 mm
Ring side clearance	0020-0055 mm
Limit	0.100 mm
Oil ring	
Dimensions (B × T)	1.50 x 2.25 mm

Distance between ends (installed)	0.20 to 0.70 mm

Downloaded from www.Manualslib.com manuals search engine

Rod	
Small end bore	14090-15028 mm
Large end bore	36000-36009 mm
Crankshaft	
Width A	47.95-48.00 mm
Maximum deformation C	0030 mm
Side clearance of large side D	0110-0140 mm

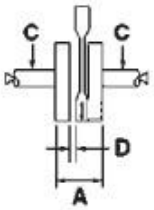

Balancer	
Method of synchronizing the balanced	Gear
Clutch	
Type of clutch	Oil-bathed multi-disc
Clutch release method	Inner force, driven by cam
Clearance of the clutch lever	10.0-15.0 mm
Thickness of the friction discs	2.90-3.10 mm
Wear limit	2.80 mm
Number of disks	4 pcs
Thickness of clutch plates	1.85-2.15mm
Number of disks	3 pcs
Limit of flatness	0.20
Free length of the clutch springs	41.60 mm
Minimum length	40.60 mm
Number of springs	4 pcs
Maximum deflection of the push rod	0.500 mm
Transmission	
Transmission type	Gear 5-speed constant
Primary reduction system	Spur gears
Primary reduction ratio	75/22 (3,409)
Secondary reduction system	Drive chain
Secondary reduction ratio	40/14 (2,857)
Operation	Operation with the left foot
Gear ratios	
The 1st	
The 2nd	38/14 (2,714)
The 3rd	34/19 (1,789)
The 4th	29/22 (1,318)
The 5th	23/22 (1,045)
	21/24 (0.875)

Downloaded from www.Manualslib.com manuals search engine

SPECIFICATIONS ENGINE

Mechanism of change	
Type shifting mechanism	Drive mechanism and guide bar
Thickness of the shift fork	4.76-4.89 mm
Decompression device	
Type of device	Auto-decompressor
Air filter	
Air filter element	Dry element
Carburetor	
Type X Number	BS26X1
Identifying mark	21C1110
Leading supplier	# 112.5
Leading supplier of air	0.9
Needle	4D1Z11
Needle seat	P-1M
Output Supplier	0.8
Jet pilot	# 15
Pilot screw turns	3-1/4
Size of the valve seat	1.5
Pump on 1	# 35
Pump on 2	0.7
So great throttle valve	1.25
Idle condition	
Engine idle	1300-1500 r / min
Oil temperature	75.0-85.0 ° C
CO%	2.0-6.0
Vacuum admission	27.9-33.3 kPa
Temperature of the spark plug base	110.0-130.0 ° C
Type oil filter	Paper
Throttle cable slack	3.0-5.0 mm

Downloaded from www.Manualslib.com manuals search engine

CHASSIS SPECIFICATIONS

Chassis	
Frame type	Diamond
Angle	25.00 °
Advance	101.2 mm
Front Wheel	
Wheel Type	Wheel type
Rim size	17 M/CXMT2.50
Material of rim	Aluminum
Wheel stroke	130.0 mm
Radial deviation limit of the wheel	1.0 mm
Limit lateral deflection of the wheel	0.5 mm
Rear Wheel	
Wheel Type	Wheel type
Rim size	17 M/CXMT3.50
Material of rim	Aluminum
Wheel stroke	120.0 mm
Radial deviation limit of the wheel	1.0 mm
Limit lateral deflection of the wheel	0.5 mm
Front rim	
Type	Tubeless
Size	100/80-17M/C 52P
Manufacturer / Model	MRF / ZAPPER-X
Rear tire	
Type	Tubeless
Size	140/60 R-17 M / C 63P
Manufacturer / Model	MRF / ZAPPER-X revz
Air pressure of tires (Measure Cold)	
Lead	200 kPa, 28psi
Back	225 kPa, 33psi
Front brake	
Type	A disc brake
Operation	Right hand operation

Downloaded from www.Manualslib.com manuals search engine

Front brake disc	
Thickness and outer diameter of the disc	267.0 x 4.0 mm
Thickness limit of the brake disk	3.5 mm
Deviation limit of the brake disk	0.10 mm
Coating thickness of brake pads (inside)	4.5 mm
Limit	0.8 mm
Coating thickness of brake pads (exterior)	4.5 mm
Limit	0.8 mm
Bore master cylinder	12.00 mm
Inner diameter of the cylinder	28.0 mm x 2
Recommended liquid	DOT3 or DOT4
Back brake	
Drum brake type	Drum brake
Operation	Right foot operation
Free pedal brake	15-20 mm
Rear drum	
Rear drum type	Advance, travel
Inner diameter of the brake drum	130.0 mm
Limit	131.0 mm
Coating thickness of shoes	4.0 mm
Brake (interior)	
Limit	
Free length of the spring lugs	2.0 mm
Free length of spring shoes 2	52.0 mm
	48.0 mm
Address	
Bearing type steering	Ball-bearing
Angle stops (left)	39.0 °
Angle stops (right)	39.0 °
Front fork	
Type	Telescopic fork
Type of shock / spring	Oil damper / coil spring
Front fork travel	130.0 mm
Free length of the fork spring	254.4 mm
Collar length	221.0mm
Installed length	246.4 mm
K1 spring tension	9.0 N / mm
K2 spring tension	10.50 N / mm
K1 Race Spring	0-75.0 mm
K2 Spring Race	75.0-130.0 mm
Outer diameter of inner tube	41.0 mm
Recommended Oil equivalent	Oil 10W or suspension
Amount	
Level	459.0 cm3
	87.0 mm
Rear Suspension	
Type	Tilt (Monocross)
Type of shock / spring helical	Oil damper / spring
Rear shock travel assembly	130.0 mm

Downloaded from www.Manualslib.com manuals search engine

Free length of spring	187.0 mm
Installed length	178.0 mm
K1 spring tension	120.0 N / mm
K1 Race Spring	0.0-20.0 mm
Tilt	
Free play at the end of the rocker (Limit axial)	2.4 mm
Drive chain	
Type / manufacturer	R428HBSX/LGB
Number of links	128
Clearance of the drive chain	30.0-40.0 mm
Length limit of 15 links	191.5 mm

Downloaded from www.Manualslib.com manuals search engine

ELECTRICAL

Voltage	
System voltage	12V
Ignition system	
Ignition system	DC, CDI
Type of feed	Digital
Ignition Timing (B.T.D.C.)	7.0 ° / 1400r/min
Coil resistance pulse	192-288Ùat 20 ° C
Ignition coil	
Primary coil resistance	0.32 to 0.48Ùat 20 ° C
Secondary coil resistance	5.68-8.52Ùat 20 ° C
Plug cap	
Material	Resin
Resistance	5kÙat 20 ° C
Magneto CA	
Standard output	14.0V 125W @ 5000 rpm
Resistance of the stator coil	0464-0696Ùat 20 ° C
Regulator / rectifier	
Regulator type	Semiconductor-Closed Circuit
Rated voltage (CD)	13.7-14.7 V
Rectifier capacity	20.0 A
Battery	
Model	AB5L-B
Voltage, capacity	12 V, 5.0 Ah
Amperage rate of 10 hours	5.0A
Lamp bulb	
Bulb type	Halogen bulb
Voltage, wattage of the bulb and quantity	
Streetlight	12 V, 35 W x 1 W/35.0
Tail / brake	12 V, 5.0 W X 1 W/21.0
Front directional light	12 V, 10.0 W × 2
Rear directional light	12 V, 10.0 W × 2
Light Meter	L.E.D.
Auxiliary light	12 V, 5.0 W × 1
Indicator light	
Neutral indicator light	LED
Directional indicator light	LED
Indicator light beam	LED
Warning light engine failure	LED

Downloaded from www.Manualslib.com manuals search engine

ELECTRICAL

Electrical ignition system	
Type of system	Constant gear
Starter	
Output power	0.25 kW
Start relay	
Amperage	100 A
Coil resistance	3.51-4.29 Ù
Horn	
Horn type	Flat
Amount	1 pc
Maximum amperage	1.5 A
Turn signal relay	
Relay type	Transistor relay
Integrated self-cancellation device	Not
Sign of the flicker frequency	70-100 cycles / min
Fuel gauge	
Resistance of the meter unit	19.0-21.0Ùat 20 ° C
Resistance of the meter unit	137.0-143.0Ùat 20 ° C
Ignition cut-off relay	
Coil resistance	90.0-110.0Ù
Fuse	
Fuse	15.0 A

Downloaded from www.Manualslib.com manuals search engine

TORQUE

GENERAL OF TORQUE

This table specifies the pairs of tightening threaded fasteners I.S.O. standard normalized. Torque specifications Tightening of the components or assemblies Special mentioned in each chapter this manual. To prevent distortion, cross-clamping assemblies with several fastening points, in progressive stages, until the specified torque. Failure otherwise specified for torque.
The threads must be clean and dry. The components, in turn, should be at room temperature.

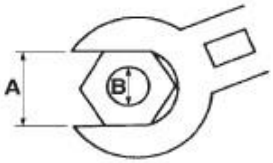

A: Face to face
B: Outer diameter of the thread

A (nut) B (pin)		Tightening general		
		Nm	m · kg	ft · lb
10 mm	6 mm	6	0.6	4.3
12 mm	8 mm	15	1.5	11
14 mm	10 mm	30	3.0	22
17 mm	12 mm	55	5.5	40
19 mm	14 mm	85	8.5	61
22 mm	16 mm	130	13.0	94

Downloaded from www.Manualslib.com manuals search engine

TORQUE MOTOR

Item	Size of thread	Amount	Torque	Observations
Head screws (inside)	M8	4	22 Nm (2.2 m kg, 16ft lb)	E
Head screws (side chain)	M6	2	10 Nm (1.0 m kg, 7ft lb)	E
Plug	M10	1	13 Nm (1.3 m.kg, 9ft.lb)	
Screw head cover (Conduit)	M6	10	10 Nm (1.0 m.kg, 7ft.lb)	
Cylinder head bolts (exhaust)	M8	2	15 Nm (1.5 m.kg, 11ft.lb)	
Balancer sprocket nut	M10	1	45 Nm (4.5 m.kg, 33ft.lb)	
Screw nut	M6	2	13 Nm (1.3 m.kg, 9ft.lb)	
Screw the decompressor	M8	1	20 Nm (2.0 m.kg, 14ft.lb)	
Screw small chain guide 2	M6	1	8 Nm (0.8 m.kg, 6ft.lb)	
Tensioner bolts	M6	2	9 Nm (0.9 m.kg, 7ft.lb)	
Cap screws	M6	2	9 Nm (0.9 m.kg, 7ft.lb)	
Bolts Rocker	M5	2	8 Nm (0.8 m.kg, 6ft.lb)	
Screws oil pump	M5	2	4 Nm (0.4 m.kg, 3ft.lb)	
Oil Drain Plug	M12	1	20 Nm (2.0 m.kg, 14ft.lb)	
Element cover screws	M6	2	10 Nm (1.0 m.kg, 7ft.lb)	
Element cover screws	M6	1	10 Nm (1.0 m.kg, 7ft.lb)	
Pinion housing screws	M6	2	10 Nm (1.0 m.kg, 7ft.lb)	
Manifold screws	M6	2	10 Nm (1.0 m.kg, 7ft.lb)	
Screw air filter (Chassis)	M6	2	10 Nm (1.0 m.kg, 7ft.lb)	
Screws through	M6	2	10 Nm (1.0 m.kg, 7ft.lb)	
AIS system screws	M6	1	7 Nm (0.7 m.kg, 5ft.lb)	
Muffler comp. nut (head side)	M8	2	15 Nm (1.5 m.kg, 11ft.lb)	
Muffler comp. screw (bottom right)	M8	1	12 Nm (1.2 m.kg, 9ft.lb)	
Muffler comp. screw (bottom left)	M8	1	20 Nm (2.0 m.kg, 14ft.lb)	
Muffler twang (Side RR. Top)	M8	1	20 Nm (2.0 m.kg, 14ft.lb)	
Screw the housing 1 and 2	M6	2	10 Nm (1.0 m.kg, 7ft.lb)	
Screw the housing 1 and 2	M6	4	10 Nm (1.0 m.kg, 7ft.lb)	
Crankcase screw 2	M6	2	10 Nm (1.0 m.kg, 7ft.lb)	
Crankcase Cover 1	M6	6	10 Nm (1.0 m.kg, 7ft.lb)	
Cover cap crankcase 1 (Cover timestamp)	M14	1	3 Nm (0.3 m.kg, 2ft.lb)	
Cover cap crankcase 1 (Cover crankshaft)	M32	1	3 Nm (0.3 m.kg, 2ft.lb)	
Cover drive chain	M6	7	2 Nm (0.2 m.kg, 1ft.lb)	
Crankcase cover screw	M6	11	10 Nm (1.0 m.kg, 7ft.lb)	

Downloaded from www.Manualslib.com manuals search engine

TORQUE MOTOR

Item	Size of thread	Amount	Torque	Observations
Screw the housing 1 and 2	M6	1	10 Nm (1.0 m.kg, 7ft.lb)	E
Nut kickstarter	M12	1	50 Nm (5.0 m.kg, 36ft.lb)	E
Lead screw gear	M6	2	12 Nm (1.2 m.kg, 9ft.lb)	
Screw clutch motor start	M6	3	14 (1.4 Nm m.kg, 10ft.lb)	
Main gear nut	M12	1	60 (6.0 Nm m.kg, 43ft.lb)	
The pressure plate bolts 1	M6	4	8 Nm (0.8 m.kg, 6ft.lb)	
Screw the push rod 1	M6	1	8 Nm (0.8 m.kg, 6ft.lb)	
Clutch nut	M14	1	70 Nm (7.0 m.kg, 51ft.lb)	
Screw drive sprocket	M6	1	10 Nm (1.0 m.kg, 7ft.lb)	
Screw cover plate	M6	2	7 Nm (0.7 m.kg, 5ft.lb)	
Screw cap lever	M6	1	10 Nm (1.0 m.kg, 7ft.lb)	
Changes cam screw	M6	1	12 Nm (1.2 m.kg, 9ft.lb)	
Screw the stator	M6	3	10 Nm (1.0 m.kg, 7ft.lb)	
Screws pulse coil	M6	2	10 Nm (1.0 m.kg, 7ft.lb)	
Magneto nut	M12	1	70 Nm (7.0 m.kg, 51ft.lb)	
Neutral switch	M10	1	20 Nm (2.0 m.kg, 14ft.lb)	
Screw starter	M6	2	10 Nm (1.0 m.kg, 7ft.lb)	

Downloaded from www.Manualslib.com manuals search engine

Sequence cylinder head tightening

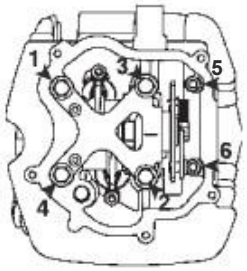

Tightening sequence of the magneto cover

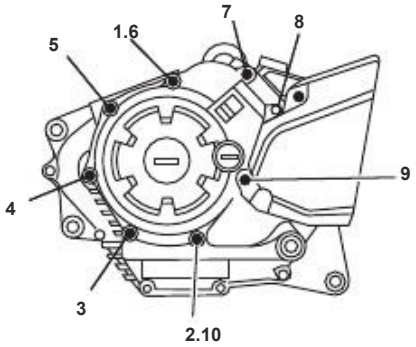

Tightening sequence of the clutch cover

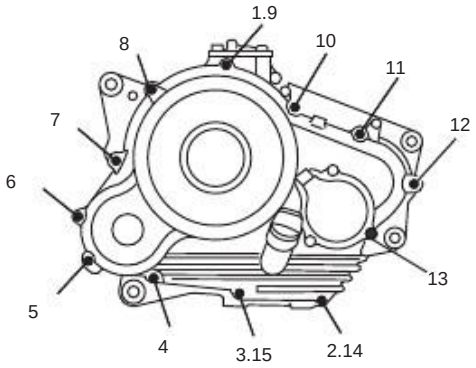

Downloaded from www.Manualslib.com manuals search engine

Crankcase tightening sequence

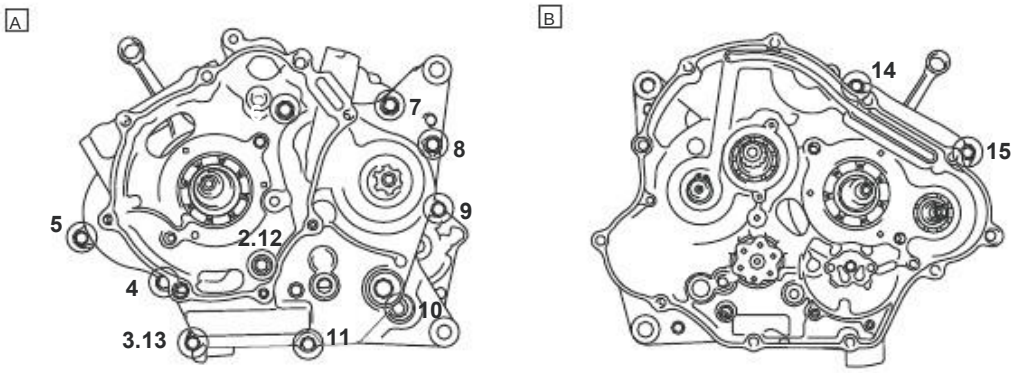

A. Carter left
B. Right side crankcase

Downloaded from www.Manualslib.com manuals search engine

TORQUE

Item	Size of thread	Amount	Torque	Observations
Screw of the steering column	M8	2	16 Nm (1.6 m kg, 12ft lb)	E
Nut of the steering column	M22	1	110 Nm (11.0 kg m, 80ft lb)	E
Lower ring nut (MI)	M25	1	33 Nm (3.3 m.kg, 24ft.lb)	
Upper ring nut (Final)	M25	1	22 Nm (2.2 m.kg, 16ft.lb)	
Front fender	M6	1	6 Nm (0.6 m.kg, 4ft.lb)	
Main switch / block address	M6	2	7 Nm (0.7 m.kg, 5ft.lb)	
Support lamppost	M6	2	7 Nm (0.7 m.kg, 5ft.lb)	
Lever bracket	M6	2	7 Nm (0.7 m.kg, 5ft.lb)	
Screw handlebar switch	M5	2	10 Nm (1.0 m.kg, 7ft.lb)	
Screw meter and lamppost	M5	3	1 Nm (0.1 m.kg, 1ft.lb)	
License holder bolts	M5	2	4 Nm (0.4 m.kg, 3ft.lb)	
Screw lamp	M6	3	7 Nm (0.7 m.kg, 5ft.lb)	
Screw cap lamp	M4	4	2 Nm (0.2 m.kg, 1ft.lb)	
Front engine mount	M10	2	55 Nm (5.5 m.kg, 40ft.lb)	
Motor front support	M8	2	55 Nm (5.5 m.kg, 40ft.lb)	
Screw top engine mount	M8	3	30 Nm (3.0 m.kg, 22ft.lb)	
Swingarm pivot nut	M12	1	46 Nm (4.6 m.kg, 33ft.lb)	
Rear shock absorber lower nut	M12	1	60 Nm (6.0 m.kg, 43ft.lb)	
Rear shock top nut	M12	1	40 Nm (4.0 m.kg, 29ft.lb)	
And tilt tension bar	M8	1	20 Nm (2.0 m.kg, 14ft.lb)	
Fuel valve screw	M6	2	7 Nm (0.7 m.kg, 5ft.lb)	
Ignition coil screw	M6	2	7 Nm (0.7 m.kg, 5ft.lb)	
Screw cap	M6	1	2 Nm (0.2 m.kg, 1ft.lb)	
Screw battery box	M6	3	7 Nm (0.7 m.kg, 5ft.lb)	
Screw gauge unit fuel	M5	4	4 Nm (0.4 m.kg, 3ft.lb)	
Nut regulator rectifier	M6	1	7 Nm (0.7 m.kg, 5ft.lb)	
Seat lock.	M6	1	4 Nm (0.4 m.kg, 3ft.lb)	
Screw cap	M6	4	2 Nm (0.2 m.kg, 1ft.lb)	
Screw manigueta	M8	4	25 Nm (2.5 m.kg, 18ft.lb)	
Screw the backlight	M5	2	2 Nm (0.2 m.kg, 1ft.lb)	
Reflective rear nut	M5	1	2 Nm (0.2 m.kg, 1ft.lb)	
Screw top cover tank fuel	M5	10	2 Nm (0.2 m.kg, 1ft.lb)	
Tank cap screw fuel	M5	2	2 Nm (0.2 m.kg, 1ft.lb)	
Air Guide 1/2 and screw air guide	M5	2	2 Nm (0.2 m.kg, 1ft.lb)	
Screw air guide	M6	2	2 Nm (0.2 m.kg, 1ft.lb)	
Nut horn	M6	1	7 Nm (0.7 m.kg, 5ft.lb)	

Downloaded from www.Manualslib.com manuals search engine

TORQUE

Item	Size of thread	Amount	Torque	Observations
Spindle nut of the front wheel	M14	1	60 Nm (6.0 m.kg, 43ft.lb)	E
Nut rear wheel axle	M14	1	90 Nm (9.0 m.kg, 65ft.lb)	E
Screw crown and hub clutch	M8	6	43 Nm (4.3 m.kg, 31ft.lb)	
Tension bar and shoe holder plate	M8	1	20 Nm (2.0 m.kg, 14ft.lb)	
Camshaft and brake lever	M6	1	10 Nm (1.0 m.kg, 7ft.lb)	
S of the clamp screw	M10	2	35 Nm (3.5 m.kg, 25ft.lb)	
Screw the brake disc	M8	6	30 Nm (3.0 m.kg, 22ft.lb)	
Master cylinder screws	M6	2	10 Nm (1.0 m.kg, 7ft.lb)	
Brake pedal and footrest	M10	1	30 Nm (3.0 m.kg, 22ft.lb)	
Screw reposapi és and chassis	M8	2	35 Nm (3.5 m.kg, 25ft.lb)	
Nut lateral support	M10	1	44 Nm (4.4 m.kg, 32ft.lb)	
Center support nut	M10	2	46 Nm (4.6 m.kg, 33ft.lb)	
Pedal nut changes	M8	1	2 Nm (2.0 m.kg, 22t.lb)	
Nut-side support bracket and chassis	M10	1	44 Nm (4.4 m.kg, 32ft.lb)	
Support plate nut nut footrest	M6	2	8 Nm (0.8 m.kg, 6ft.lb)	
Union nut arm changes	M6	1	10 Nm (1.0 m.kg, 7ft.lb)	
Nut for rear brake switch	M6	1	7 Nm (0.7 m.kg, 5ft.lb)	

Downloaded from www.Manualslib.com manuals search engine

LUBRICATION POINTS AND LUBRICANT TYPES

Point Lubrication	Lubricant
Edge of the oil seals	LS
Bearings	E
O-rings	LS
Head screws and washers	E
Thrust surface of the large end of the rod	E
Piston, piston rings and the inner surface of the cylinder	E
Inner surface of the balancer sprocket	E
Camshaft lobes	E
Decompression cam	M
Valve stem seal	E
Valve stems (intake and exhaust)	M
Valve stem ends (intake and exhaust)	M
Rocker shaft	M
Inner surface of the rocker shaft	M
Pin the decompression lever	E
Oil seal (clutch cover)	M
Sprocket Oil Pump	M
Rotor oil pump (internal and external)	E
Pinion thrust surface free starter clutch	E
Pinion starter clutch free	E
Inner surface and pinion thrust surface clutch	E
start	E
Starter clutch rollers	E
Clutch thrust cam Inner surface of the primary pinion	E
Clutch Pushrod (Short and Long) and pellet	E
Contact surface of the nut fixing the clutch hub and washer	E
Drive gear (wheel and pinion) and necklace	E
Fork guide bar changes and shift forks	E
Drum gear Axis changes	E
	M
	E
	E
	E

Downloaded from www.Manualslib.com manuals search engine

LUBRICATION POINTS AND LUBRICANT TYPES

Point Lubrication	Lubricant
Crankshaft Position Sensor / washer assembly Lead stator	Yamaha Adhesive No. 1215 (Three Bond No.1215R)
Contact surface of carcasses	Yamaha Adhesive No. 1215 (Three Bond No.1215R)
Tensioner bolts distribution chain	Yamaha Adhesive No. 1215 (Three Bond No.1215R)

Downloaded from www.Manualslib.com manuals search engine

LUBRICATION POINTS AND LUBRICANT TYPES

Point Lubrication	Lubricant
Seal edges of the front wheel (left and right)	LS
Outer surface of the front wheel axle	LS
Speed sensor unit	LS
Seal edges of the rear wheel hub	LS
Contact surface of the rear wheel hub	LS
Outer surface of the rear wheel axle	LS
Rear wheel axle and the threads of the nut	S
Pivot point axis of the brake pedal	S
Inner surface of the slide pins of the caliper bracket brake	LS
Inner surface of the guide and the throttle cable accelerator	LS
End of the clutch cable and clutch lever	S
Outer surface of the lever pivot brake	LS
Bearings of the steering column and the edges of the cover upper bearing	LS
Dust of the steering column	LS
Wire nuts and bolts (relay arm and calls)	LS
Wire nuts and bolts (Biela and relay arm)	LS
Wire nuts and bolts (rear shock relay arm)	LS
Wire nuts and bolts (relay arm and tilt)	LS
Wire nuts and bolts (Biela and tilt)	LS
Edges of oil seals (Relay arm and swingarm)	LS
Bushings (relay and rocker arm)	LS
Pivot shafts and threads of the nut	LS
Outer surface of the pivot axis	LS
Outer surface of the swing arm bushing	LS
Edges dusty swingarm	LS
Pivot point of the lateral support and movement point metal to metal	LS
Footrest pivot point	LS
Pivot point of the passenger footrest	LS
Pedal pivot point changes	LS
Nuts and bolts motor mount	E

Downloaded from www.Manualslib.com manuals search engine

TABLES AND DIAGRAMS LUBRICATION SYSTEM

TABLE OF ENGINE OIL LUBRICATION

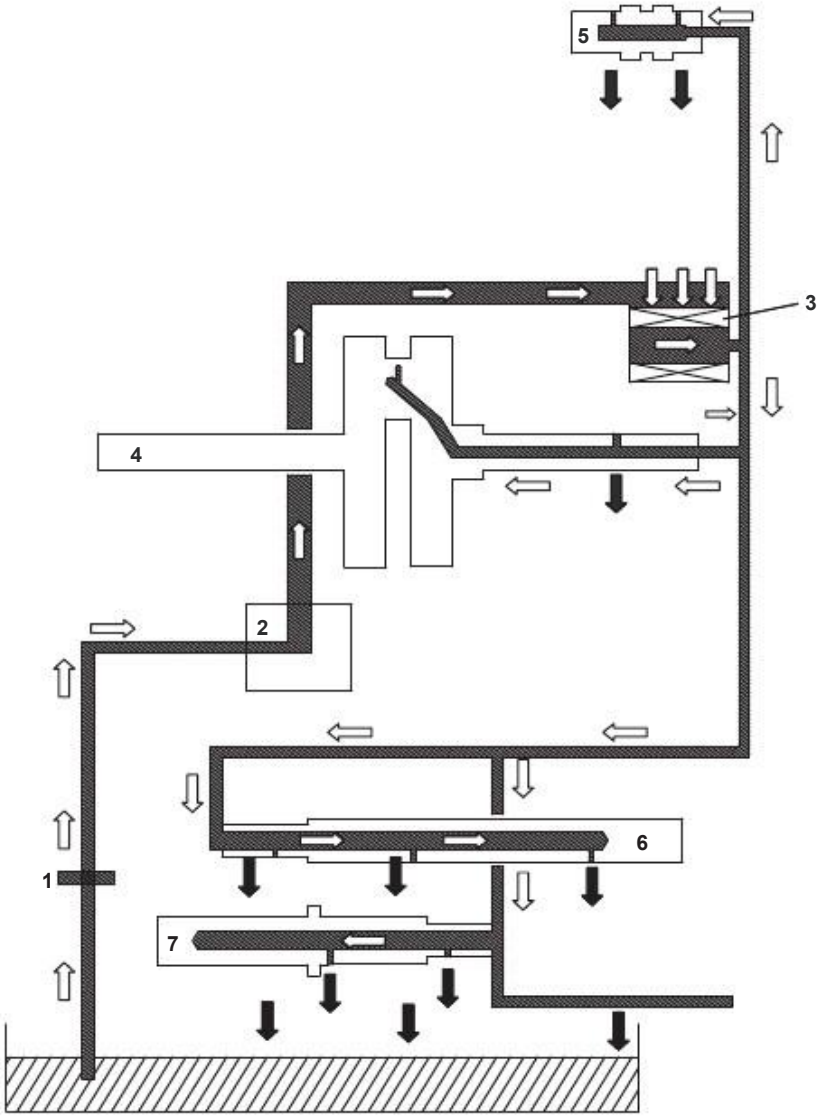

1. Oil strainer
2. Oil pump
3. Oil filter element
4. Crankshaft
5. Camshaft
6. Main shaft
7. Driven shaft

Downloaded from www.Manualslib.com manuals search engine

LUBRICATION CHARTS

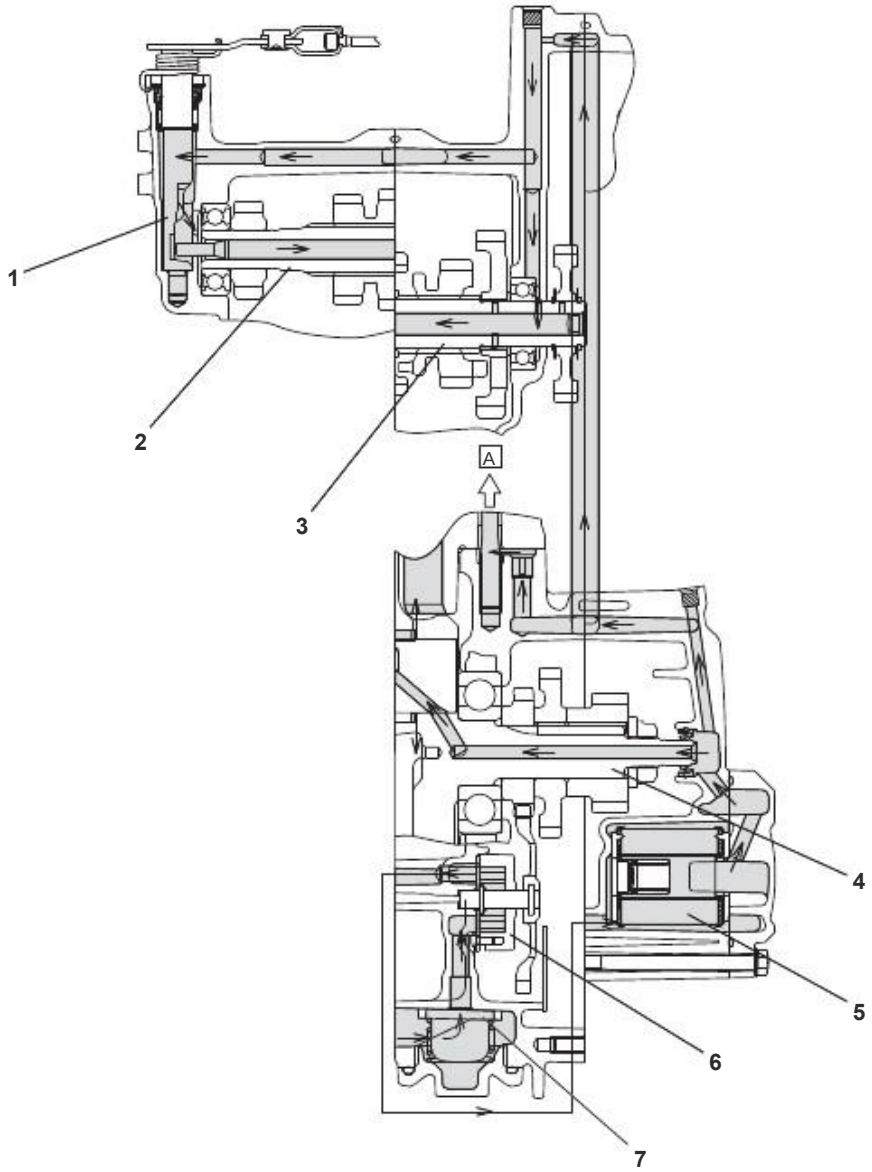

1. Push the clutch lever
2. Main shaft
3. Drive shaft
4. Crankshaft
5. Oil filter
6. Oil pump
7. Oil strainer

A. Toward the head

Downloaded from www.Manualslib.com manuals search engine

LUBRICATION CHARTS

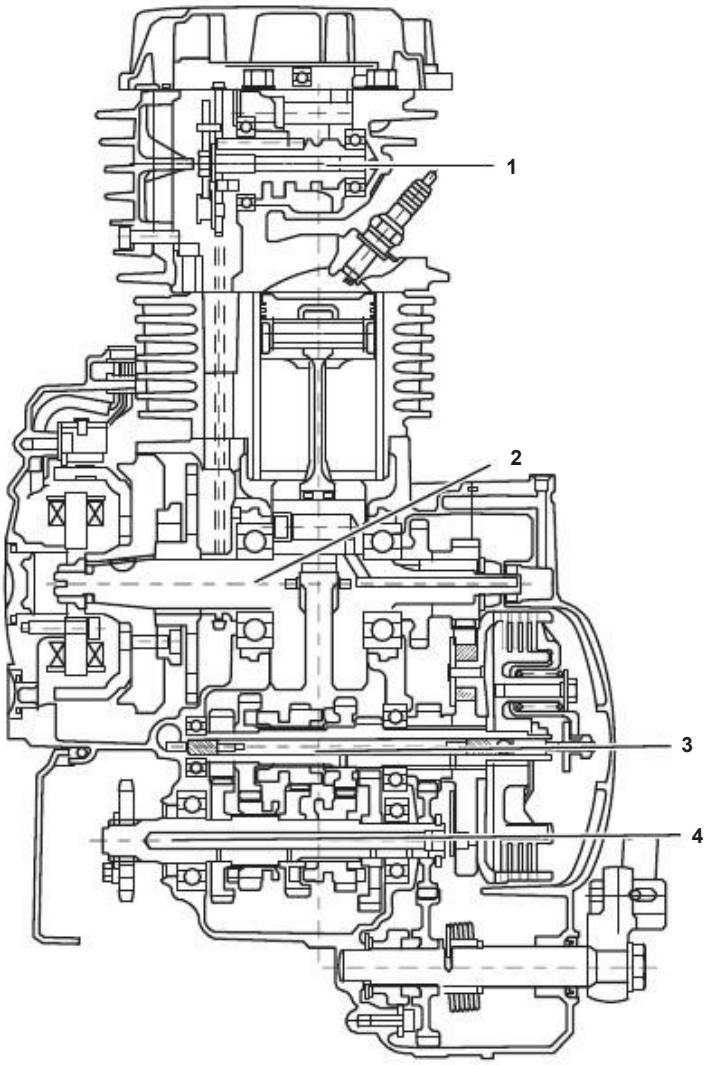

1. Camshaft
2. Crankshaft
3. Main shaft
4. Driven shaft

Downloaded from www.Manualslib.com manuals search engine

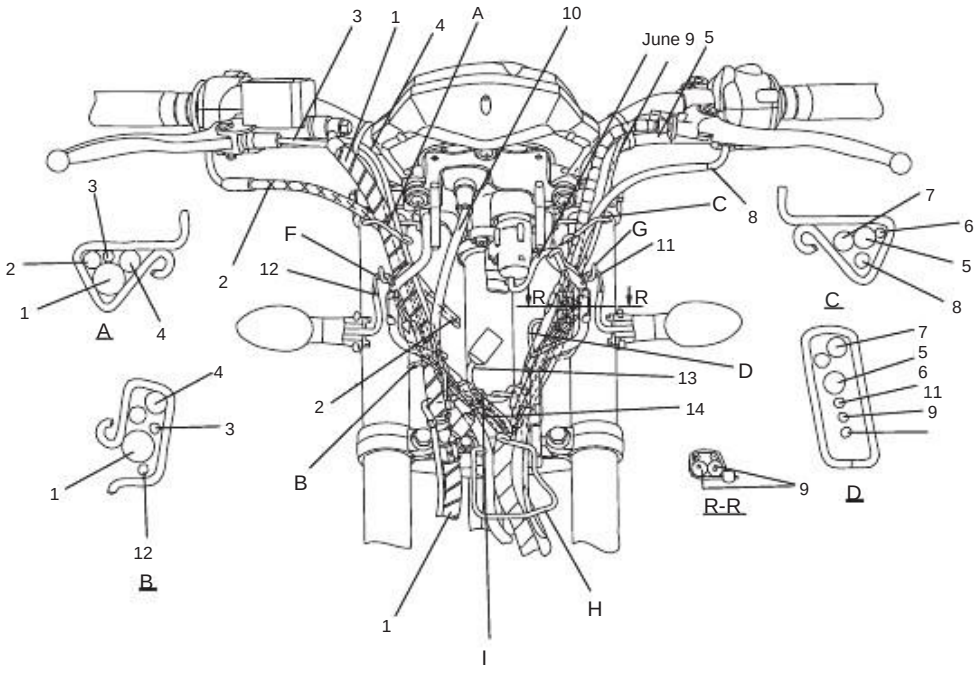

Downloaded from www.Manualslib.com manuals search engine

1. Front brake hose
2. Throttle cable
3. Cable front brake switch
4. Cable right handlebar switch
5. Switch wire left handlebar
6. Clutch switch wire
7. Clutch cable
8. Starter cable
9. Main switch lead
10. Meter cable
11. Lead right front turn signal
12. Cable left front turn signal
13. Streetlight cable
14. Auxiliary Light Cable

A. Go through the right guide bracket lamp RHS
B. Go through the right guide bracket lamp RHS
C. Passes through the left guide lamp bracket LHS
D. Passes through the left guide lamp bracket LHS
E. Hold the lamp support bracket
F. Pass the cable through the right front directional guide
G. Pass the cable through the left front directional guide
H. Pass the wire harness, cables handlebar switches, the drive cable sensor through the lamp guide bracket
The cable to the sensor unit through the lamp guide bracket

I.

Downloaded from www.Manualslib.com manuals search engine

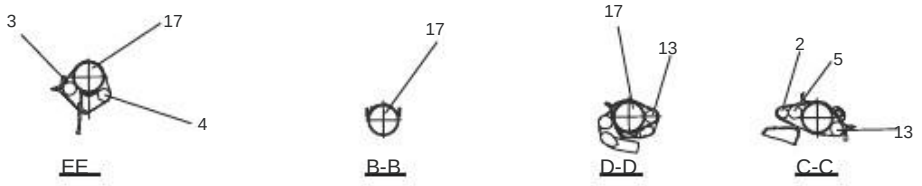

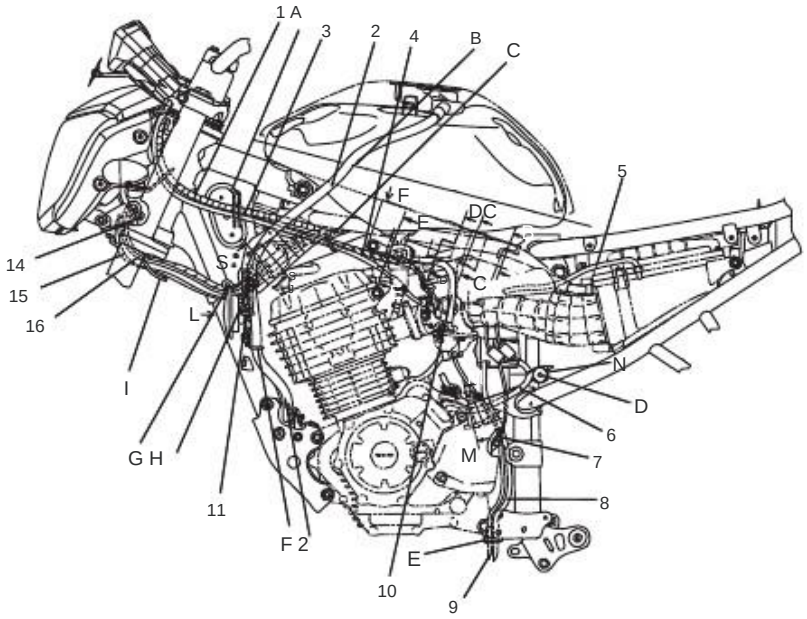

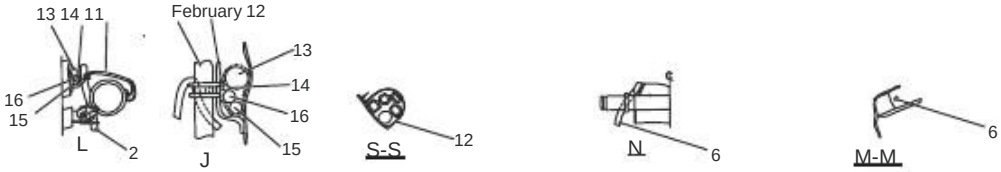

Downloaded from www.Manualslib.com manuals search engine

1. Clutch cable
2. Overflow pipe
3. Throttle cable
4. Starter cable
5. Carburetor vent hose
6. AC magneto lead
7. Negative lead
8. Breather hose from the battery
9. Carburetor drain hose
10. Fuel line
11. Speaker Cable
12. Connector cover
13. Harness
14. Cable sensor unit
15. Switch wires left handlebar
16. Cables right handlebar switch
17. AIS hose

A. Cable clutch and starter cable through the guide
B. Overflow pipe through the left edge of the fuel tank
C. Throttle cable and starter cable through the guide
D. Attach the AC magneto lead frame clamp
E. Pass the breather hose from the battery and the carburetor drain hose to through the holes in the hose joint
F. Pass the overflow pipe through the guide
G. Pass the wire harness cable, the sensor unit cables, switches handlebar through the guide
H. Thread the speaker cord, after spending the overflow pipe through the guide
I. Pass the wire harness cable, the sensor unit cables, switches handlebar through the guide
J. Inserting the projection of the connector cover the hole in chassis
K. After connecting the cables, all cables will be covered by the cover connectors. No bare wires protruding from the connector cover.

Downloaded from www.Manualslib.com manuals search engine

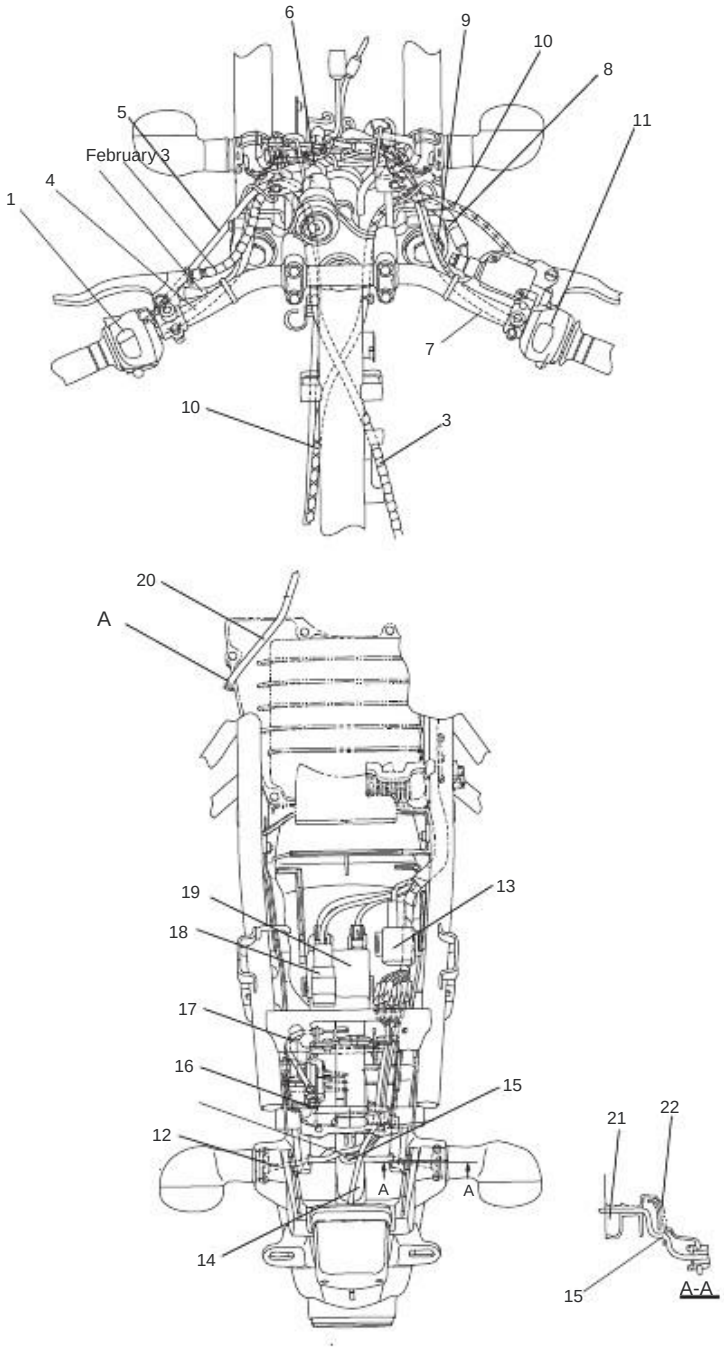

Downloaded from www.Manualslib.com manuals search engine

1. Left handlebar switches
2. Clutch switch wire
3. Clutch cable
4. Cable left handlebar switch
5. Booster Cable
6. Main switch lead
7. Handlebar switch lead right
8. Brake Hose
9. Cable front brake switch
10. Throttle cable
11. Handlebar switches right
12. Cable left rear turn signal
13. Turn Signal Relay
14. Cable from the backlight unit
15. Lead right rear turn signal
16. Cover the seat lock
17. Cable lock the seat
18. Relay circuit court of the boot
19. CDI
20. Carburetor vent hose
21. Rear fender
22. Rear fender cover

A. Insert the breather hose into the hole carburetor air filter
B. Attach cables handlebar switches and the clutch clamp handlebar
C. Attach cables and switches front brake handlebar clamp handlebar
D. Pass the tail light wires through the hole of the rear fender
E. Set the high voltage cable and vent hose clamp with 1
F. Attach the clutch cable and hose vacuum detection with 1 bracket

Downloaded from www.Manualslib.com manuals search engine

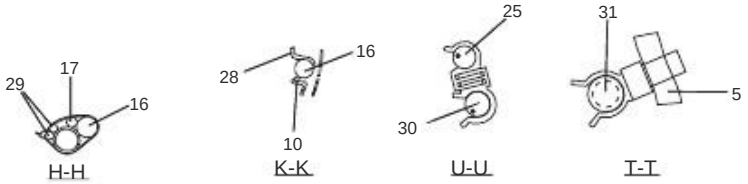

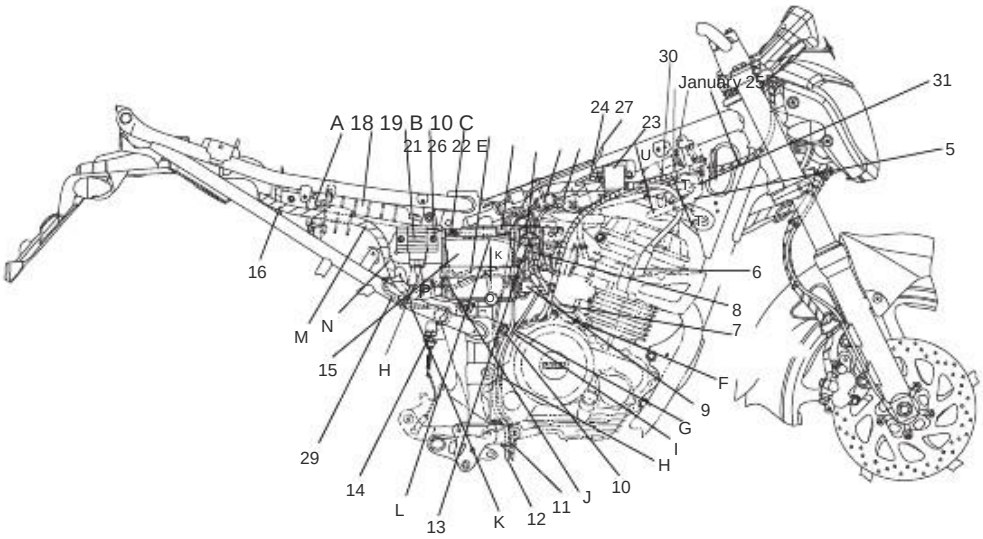

Downloaded from www.Manualslib.com manuals search engine

GUIDING CABLES

1. Throttle cable
2. Cable sensor unit
3. Brake Hose
4. Speaker Cable
5. Cable high
6. Plug cap
7. Starter Cable
8. Starter relay cable
9. Fuse holder
10. Negative lead
11. Carburetor drain hose
12. Breather hose from the battery
13. Start relay
14. Brake switch
15. Battery
16. Harness
17. Cable regulator rectifier
18. Air Filter Cover
19. Regulator Rectifier
20. Carburetor breather hose
21. Positive cable
22. AC magneto lead
23. Ignition coil
24. Wire the ignition coil
25. Clutch cable
26. Cable throttle position sensor
27. Fuel meter cable
28. Battery Box
29. Cable brake switch
30. Detecting vacuum hose
31. AIS unit hose

A. Pass the wire harness through the guide Air filter
B. Pass the wire harness, the negative lead to through the rear hook of the box battery
C. Adjust the white label wiring harness with a clamp
D. Adjust the clamp on the back of a motor support chassis
E. Opposite the bracket painted white The vacuum hose 1 Detection
F. Route the starter relay and the motor boot through the clamp on the Battery box
G. Pass the breather hose and battery the drain hose from the carburetor to through the exterior of the motor
H. Pass the breather hose and battery the drain hose from the carburetor to here through the interior of
I. Attach the positive lead and the fuse holder with Battery band
J. Pass the wire harness through the hook in the battery box
K. Attach the throttle cable, rectifier, wire harness and cable switch brake chassis clamp
L. Pass the wiring harness through the rear of the battery box
M. The wire harness passes through the slot the air filter cover
N. Adjust the white label wiring harness with the clamp on the right side of the box Battery
O. Attach the negative wire and fuse. The cable positive band of the battery

Downloaded from www.Manualslib.com manuals search engine

PERIODIC MAINTENANCE AND ADJUSTMENTS

PERIODIC MAINTENANCE ..... 3-1 .....

PERIODIC MAINTENANCE AND LUBRICATION INTERVALS ... 3-1

ADJUSTING THE VALVE CLEARANCE 3-3
ENGINE IDLE ADJUSTMENT ..... 3-3 .....
MEASUREMENT AND ADJUSTMENT CO ..... 3-5 .....
ADJUSTING THE THROTTLE CABLE SLACK 3-6
SPARK PLUG INSPECTION 3-7
ON INSPECTION TIME 3-7
MEASURING THE COMPRESSION PRESSURE 3-8
OIL LEVEL INSPECTION ..... 3-9 .....
MOTOR OIL CHANGE ..... 3-9 .....
FREE PLAY ADJUSTMENT CLUTCH CABLE 3-10
CLEANING THE AIR FILTER ELEMENT 3-11
CHECK THE BOARD AND CARBURETOR
CONNECTION OF THE AIR FILTER BOX 3-12
CHECK THE BREATHER TUBE HEAD 3-12
CHECK THE EXHAUST SYSTEM ..... 3-12 .....
CHECK THE FILTER FUEL SWITCH 3-13

ADJUSTING THE REAR BRAKE ..... 3-14 .....
CHECKING THE BRAKE FLUID LEVEL 3-14
CHECKING THE FRONT BRAKE PADS 3-15
CHECKING THE FRONT BRAKE HOSE 3-15
CHECKING THE REAR BRAKE PADS 3-15
SWITCH SETTING THE REAR BRAKE LIGHT 3-15
BLEEDING THE HYDRAULIC BRAKE SYSTEM 3-15
ADJUSTING THE CLEARANCE OF THE CHAIN 3-16
CHAIN LUBE 3-17
CHECKING AND ADJUSTING THE STEERING COLUMN 3-18
FRONT FORK INSPECTION 3-19
TIRE INSPECTION ..... 3-19 .....
INSPECTION WHEEL 3-20
INSPECTION AND LUBRICATION. CABLES 3-20
LUBRICATING THE CLUTCH LEVER 3-20
LUBE BRAKE LEVER 3-21
PEDAL LUBRICATION ..... 3-21 .....
LUBRICATION SIDESTAND ..... 3 -21
LUBRICATING THE REAR SUSPENSION 3-21
ADJUSTING THE REAR SHOCK 3.21

Downloaded from www.Manualslib.com manuals search engine

TROUBLESHOOTING

ELECTRICAL 3-22
CHECKING AND CHARGING THE BATTERY ..... 3-22 .....
FUSE INSPECTION ..... 3-22 .....
BULB REPLACEMENT FAROLA ..... 3 - 22
SETTING THE BEAM BULB FAROLA 3-23
BULB REPLACEMENT OF AUXILIARY 3-23
BULB REPLACEMENT TAILLIGHT / BRAKE LIGHT 3-23
LIGHT BULB REPLACEMENT INDICATOR 3-24

Downloaded from www.Manualslib.com manuals search engine

PERIODIC MAINTENANCE

Table of lubrication and routine maintenance

NOTE:

All maintenance must be performed according to the periodic maintenance schedule (which mentioned below) to maintain the best performance of the vehicle.

The items marked with an asterisk must be performed by a Yamaha dealer as they require special tools, information and technical expertise.

NO.		ELEMENT	INSPECTION OR OPERATION OF MAINTENANCE	READING ODOMETER (X 1000 km) 15 136912					
1	*	**Line fuel**	• Check fuel lines are cracked or damaged.						
2		**Plug**	• Check the condition • Clean and adjust the tolerance						
			• Change • Review of tolerance	Every 12000 Km					
3	*	**Valves**	• Set • Clean						
4	*	**Air filter**	• Change						
			• Check the output voltage	Every 12000 Km					
5	*	**Battery**	• Check the electrolyte / specific gravity • Check operation. • Adjust.						
6		**Clutch**	• Lubricate lever • Check operation, fluid level and leakage.						
7	*	**Brake front**							
			• Replace brake pads	Whenever you reach the limit Wear					
8		**Back brake**	• Check operation of the shoes brake						
			• Change the brake pads	Whenever you reach the limit Wear					
9	*	**Hose brake**	• Check for cracked or damaged.						
			• Change	Every 4 years					
10	*	**Wheels**	• Check for offset or damaged.						
11	*	**Tires**	• Check tread depth and if damaged. • Replace if necessary. • Check air pressure. • Correct if necessary.						
12	*	**Bearings Wheel**	• Check bearing for looseness or damaged. • Check operation and the gap is excessive.						
13	*	**Tilt**	• Lubricate with grease based on lithium soap. • Check the slack, alignment and condition						
			chain.	Every 12000 Km					
14		**Chain transmission**	• Adjust and lubricate chain with a lubricant for chains	Every 500 km and after washing the motorcycle or circular with rain					

Downloaded from www.Manualslib.com manuals search engine

NO.		ELEMENT	INSPECTION OR OPERATION OF MAINTENANCE	READING ODOMETER (X 1000 km)					
				13691215					
15	*	Bearings Address	•Check the clearance of the bearings and if the steering for roughness •Lubricating grease based on lithium soap.						
16	*	Fasteners frame	•Check that all nuts, bolts and screws are properly tightened.	Every 12000 Km					
17		Side support / Central	•Check operation. •Lubricate						
18	*	Fork lead	•Check operation and leaks oil.						
19	*	Set amortiguadores	•Check operation and the leak oil dampers.						
20	*	Oil motor	•Change. •Check oil level and leaks.						
21		Oil filter motor	•Change.	Every 10000 km (in the odometer)					
22		Switches Brake forward and back	•Check operation						
25	*	Parts mobile and Cables	•Lubricate.						
26	*	Grip housing of accelerator and cable	•Check operation and ease. •Adjust the free play of the throttle cable if necessary. •Lubricate the throttle grip housing and cable.						
27	*	System induction air	•Check the air cut valve, the reed valve and the tube is damaged. •Replace damaged parts as necessary.						
28	*	Lights, signals and switches	•Check operation. •Adjust the light of the lamp (if necessary).						

NOTE:

- The air filter needs more frequent maintenance if it leads to excessively wet areas or dusty.
- Service damping.
  - Regularly check and, if necessary, correct the brake fluid level.
  - Every two years replace the internal components of the master cylinder, brake caliper and change the brake fluid.
  - Replace the brake hoses every four years or when you see cracks or damage.

Downloaded from www.Manualslib.com manuals search engine

ENGINE

ADJUSTING THE CLEARANCE VALVES

The following procedure applies to all valves.

NOTE:

- Adjusting the valve clearance should when the engine is cold temperature environment.
- When you measure or adjust the clearance the valve, the piston must be at point top dead center (TDC) in the race

1. Remove:
- Seat
  Refer to "GENERAL CHASSIS" on page 4-1
- Fuel tank
  Refer to "GENERAL CHASSIS" on page 4-2
2. Disconnect
  Hose air induction system
- See "SYSTEM INDUCTION AIR "on page 6-9
3. Remove:
  Cylinder head cover
- Packing the cylinder head cover
- See the "HEAD" on page 5-5
4. Remove:
  Screw access to the brand time "1"
- Access screw end of the crankshaft "2"
-

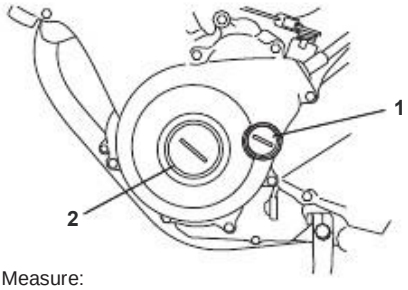

5. Measure:
- Valve clearance
  Out of specification →Adjust

	Valve clearance (Cold) **Admission** **0.08 to 0.12 mm** **Exhaust** **0.12 to 0.16 mm**

▼▼▼

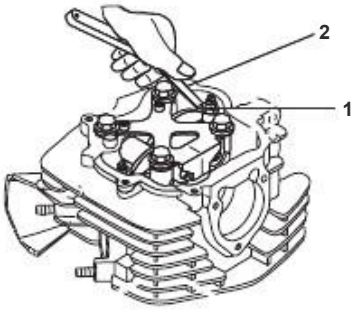

c. Turn the adjustment screw "3" in direction "a" or "b" to obtain the specified valve clearance.

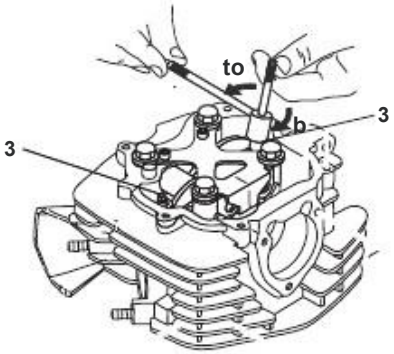

Direction "a"
Increased valve clearance.
Direction "b"
Reduces valve clearance

Tappet screw holder
YSST-706
Fitting key screw
YSST-806A

- Hold the adjusting screw to prevent move and tighten the nut to specified.

Locknut
13 Nm (1.3 m · kg, 9 lb · ft)

d. Remeasure the valve clearance.
e. If the valve clearance is outside the value specified, repeat the adjustment to obtain the specified clearance.

▼▼▼

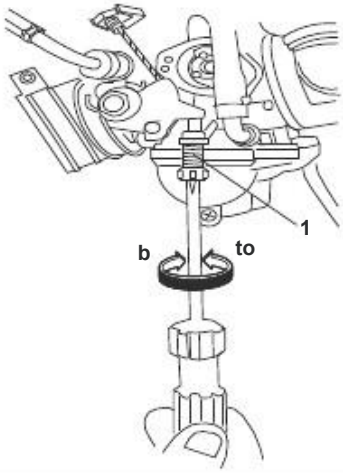

Direction "a"
Increases engine idle
Direction "b"
Engine idle speed is reduced

8. Remove:
   - Digital Tachometer

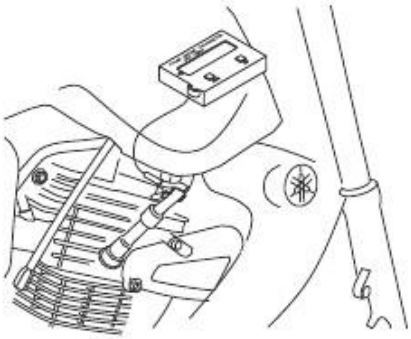

9. Fit:
   - Cable free play Refer throttle the "SET FREE GAME THROTTLE CABLE "on page 3-6

Cable free play
3.0-5.0 mm throttle

MEASUREMENT AND ADJUSTMENT CO

1. Start the engine and let the calendar equivalent to travel 4 kms.
2. Install:
   - Tachometer to the spark plug wire
3. Check:
   - Engine idle
   If out of specification? Set.
   Refer to "ADJUSTING THE IDLE ENGINE "on page 3-4.
4. Insert:
   - Probe "2" meter CO
   (Calibrated) for the exhaust pipe "3", using the appropriate adapter "4"

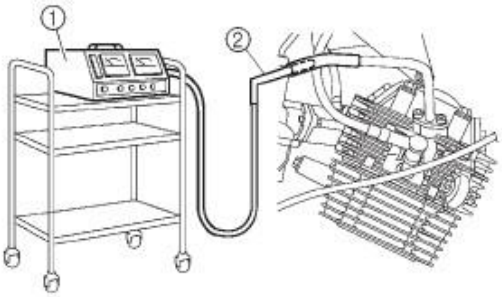

Density of 'CO':
2.0 - 6.0%

Out of specification? Set.
5. Fit:
   Adjusting the density of CO through the screw Mixing

Turn the mixture tronillo "5" in or out until the specified value in the density of "CO"

Turn out
Density "CO" increases
Turn inward
Density "CO" is decreased

Idle adjustment according to the specifications

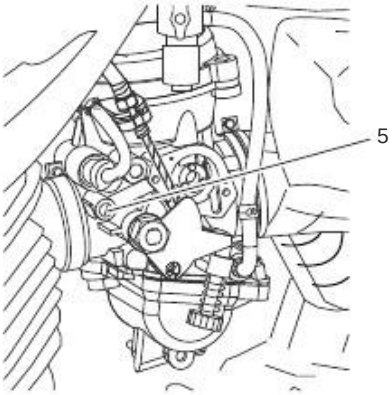

Downloaded from www.Manualslib.com manuals search engine

CAUTION

Do not alter the settings of the carburetor, if the engine performance is good.

- **If necessary, adjustments should be recorded existing (No. of turns) screw mixture.**
- **To verify the configuration of the screw demezcladelcarburador, sigael CO adjustment procedure "**
- **Ensure the correct installation of blanking plug**

6. Fit:
- Engine idle stop screw accelerator "1"

	Engine idle R.P.M. 1300 to 1500 RPM

SET CABLE FREE PLAY

THROTTLE

NOTE:

Before adjusting the throttle cable free play throttle, adjust the engine idle

1. Check
- Slack "to" throttle cable
  Out of specification →Adjustment

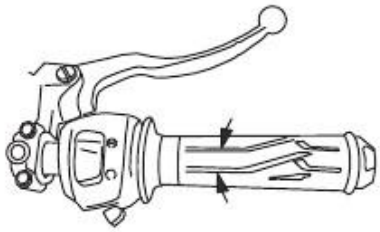

	Throttle cable slack 3.0-5.0 mm

2. Adjustment
- Throttle cable slack

▼▼▼

CHECKING THE SPARK

1. Disconnect:
- Spark plug cap

2. Remove:
- Plug

CAUTION

Before removing the spark plug, clean air compressed dirt that may have accumulate in the gap of the spark plug to prevent to fall into the cylinder

3. Check:
- Type spark plug (NGK / CPR8EA-9)
  Wrong →Change.
4. Check:
- Electrode "1"
  Damage / wear? Replace the spark plug.
  Insulation "2"
5. Clean:
  Plug
- (With a spark plug cleaner or brush wire)
6. Measure:
  Clearance of the spark plug electrodes "a"
- (With a feeler gauge)
  Off-spec →Set.

	Distance between the electrodes **Spark plug** **0.8-0.9 mm**

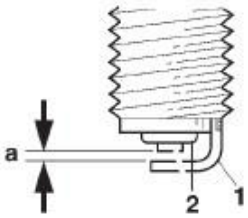

7. Install:
- Plug

	Plug **13 Nm (1.3 m · kg, 9.4**

NOTE:

Before installing the spark plug, clean the surface the spark plug and gasket.

8. Connect:
- The spark plug cap

ON INSPECTION TIME

NOTE:

Before checking the ignition timing,
Check the connection of all cables of all the ignition system. Make sure all connections are tight and free of.

1. Remove:
- Screw access to the brand time "1"

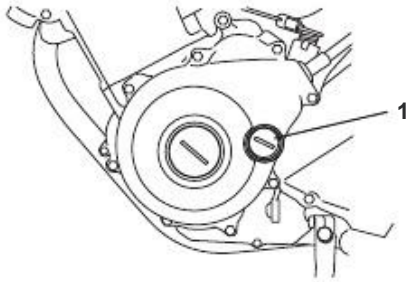

	Crankshaft key cap **YSST-625**

2. Connect:
- Strobe Light "1"
- Digital tachometer to the spark plug wire

	Stroboscope lamp

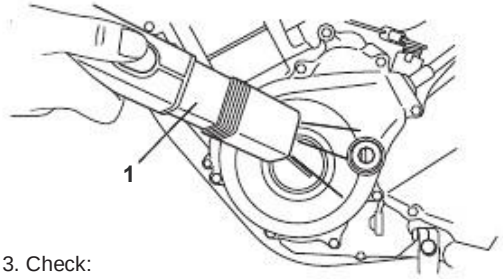

3. Check:
- Ignition timing

Downloaded from www.Manualslib.com manuals search engine

a. Start the engine and let it warm up for few minutes and then leave the engine up in the specified idle

	Engine idle **1300-1500 r / min**

b. Verify that the stationary pointer "a" in the magneto cover is within the firing interval "b" of the rotor magnet. Improper firing interval →Check the Ignition system

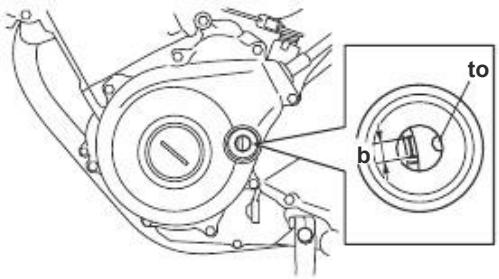

4. Remove:
- Digital Tachometer
- Stroboscope lamp

5. Assembly:
- Screw access to mark time (Along with the O-ring ew

MEASUREMENT OF PRESSURE COMPRESSION

NOTE:

Insufficient compression pressure, result in performance loss.

1. Measure:
- Valve clearance
  Out of specification →Set.
  Refer to "ADJUSTING THE VALVE CLEARANCE "on page 3-3
2. Start the engine and leave for calendar few minutes and then off.
3. Disconnect:
   Spark plug cap
4. Remove:
- The spark plug

CAUTION

Before removing the spark plug, clean air compressed dirt that may have accumulate in the spark plug gap for prevent it from falling into the cylinder

5. Install:
- Gauge "1"

	Gauge

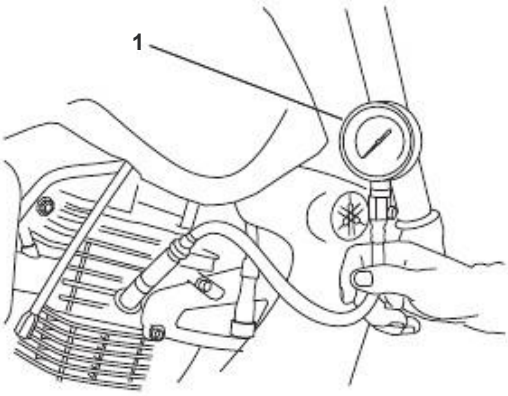

6. Measure:
- Compression pressure
  Out of specification? See steps (C) and (d).

	Compression pressure **1200 kPa (sea level)**

a. Set the main switch in position "ON"
b. With the throttle open, start the motor boot until the reading of gauge to stabilize.
c. If compression is above the maximum specification, check deposits carbon in the cylinder head surfaces valves and piston head.
   Carbon deposits →Remove.
d. If the compression is below the minimum specification, put a spoon engine oil through the spark plug hole and measure again.
   See the table below.

Downloaded from www.Manualslib.com manuals search engine

Compression pressure (with oil applied inside the cylinder)	
LecturaDiagnóstico	
Greater than without oil	piston rings are Worn or damaged Repair
Oil-like	Piston, valves, packing possibly the cylinder head defective Repair / replace

7. Remove:
- The gauge

8. Assembly:
- Plug.

	Plug **13 Nm (1.3 m · kg, 9.4 ft · lb)**

9. Connect:
- Spark plug cap.

CHECKING THE OIL LEVEL
ENGINE

1. I placed the vehicle on a flat surface.

Note:
- Place the vehicle on the main stand.
- Make sure the vehicle is upright.

2. Start the engine, warm it up for some minutes and then off.
3. Check:
   Engine oil level.
   - The engine oil level should be between minimum marks "a" and maximum "B"
   Below the minimum level mark add engine oil type recommended to the specified level.

Note:
- Before checking the engine oil level, wait a few minutes until the oil is has settled.
- Do not screw the dipstick "1" when Check the oil level.

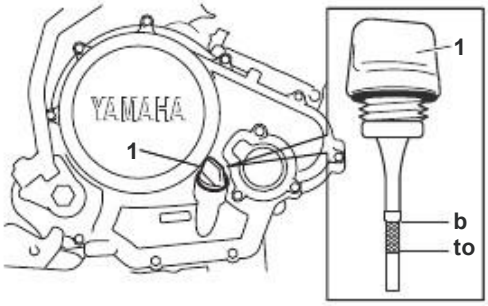

	Type **SAE 20W50 (Engine Oil YAMALUBE-4 times)**

CAUTION

Do not let foreign materials enter in the crankcase.

4. Start the engine, warm it up for some minutes and then off.
5. Check the engine oil level again.

NOTE:
Before checking the engine oil level, wait a few minutes until the oil is has settled.

CHANGE ENGINE OIL

1. Start the engine, warm it up for some minutes and then off.
2. Place a container under the screw Drain engine oil.
3. Remove:
   Meter engine oil level "1".
   - Plug "2".
   -

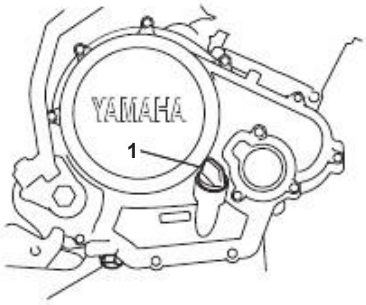

2

4. Drain:
   - Engine Oil
   (Completely Crankcase).
5. If the oil filter element also must be replaced, proceed as follows manner.

a. Remove the cover of the filter element oil "1" and the oil filter element "2".
b. Install new O-Rings "3"

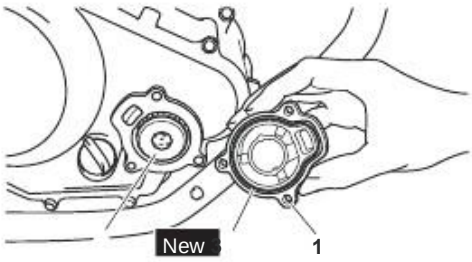

Downloaded from www.Manualslib.com manuals search engine

c. Assemble the new oil filter element and cover of the oil filter element.

	Cover screw element Oil filter 10 Nm (1.0 m · kg, 7.2 ft · lb)

7. Ensemble:
   - Drain Plug Washer

	Drain Plug 20 Nm (2.0 m · kg, 14 ft · lb)

8. Filling:
   - Sump
   (With the specified amount of oil recommended)

	Number of motor oil / quantity Periodic oil change 1.00 lt Total quantity of oil

9. Assembly:
   - Motor oil gauge
10. Arranque the engine, warm it up for some minutes and then off.
11. Verifique
   - Engine
   - Engine Oil Leak)

12. Verificar:
   - Engine Oil Level
   Refer to "CHECKING AND ENGINE OIL LEVEL "in the page 3-9
13. Check:
   - Engine oil pressure

a. Loosen screw check oil "1".

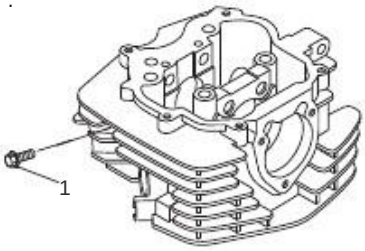

b. Start the engine and idle until the oil begins to seep from the screw verification of oil. If it is not engine oil after one minute, turn off the engine to no damage occurs.

c. Check the engine oil passages, the oil filter element and the pump oil that is damaged or leaking. See the "OIL PUMP" on page 5-43.

d. Start the engine after solving the problem (s) and Pressure test Engine oil again.

e. Tighten the torque verification specified.

	Oil check screw 7 Nm (0.7 m · kg, 5.1 ft · lb)

SET CABLE FREE PLAY CLUTCH

1. Check:
   - Free play Clutch cable "to"
   - Set out of specification

	Free play of the lever clutch 10.0-15.0 mm

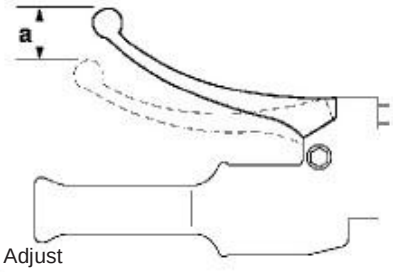

2. Adjust
   - Free play of clutch cable

Side of the handlebar

a. Pull back the rubber cover "1"
b. Loosen the lock nut "2"
c. Turn the adjustment screw "3" in the direction "A" or "b" to obtain the free play specified clutch cable.

Direction "a" The cable free play of clutch increases Direction "b" The cable free play of clutch decreases

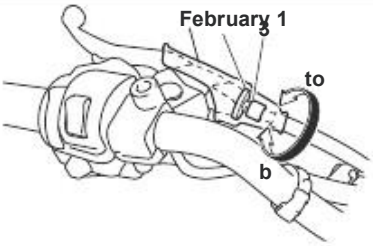

Downloaded from www.Manualslib.com manuals search engine

d. Tighten the lock nut.
e. Slide the rubber cover into position original.

NOTE:

If the specified free play of clutch cable, can not be obtained on the side of the handlebar, use the adjusting nut on the motor side.

Motor side

a. Loosen the locknut "1"
b. Turn the adjustment screw "2" in the direction "A" or "b" to obtain the specified free play clutch cable.

Direction "a" **The cable free play of clutch increases** **Direction "b"** **The cable free play of clutch decreases**

NOTE:

Keep the right handlebar

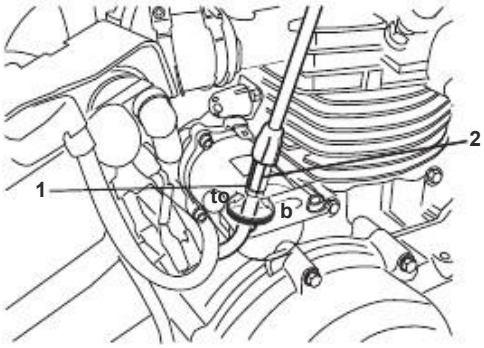

c. Tighten the lock nut.

	Locknut **9 Nm (0.9 m · kg, 6.5 ft · lb)**

CLEANING THE FILTER ELEMENT AIR

NOTE:

There is a hose inspection "1" on the basis of the air filter box. If there is dust and / or water accumulated in the hose, clean the element air filter and air filter box.

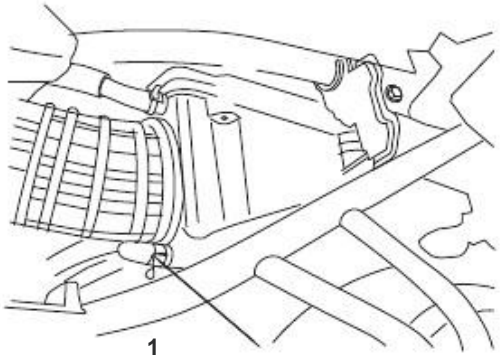

1. Remove:
   - Seat
   Refer to "GENERAL CHASSIS" On page 4-1

2. Remove:
   - Cover air filter box "1"
   - Air filter element

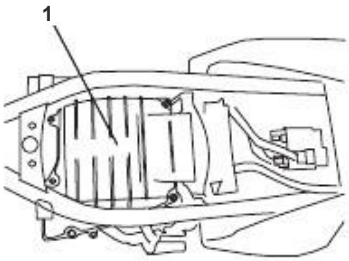

3. Clean:
   - Air filter element "1"
   Apply dry compressed air from the surface outside the inner air filter element.

4. Check:
   - Air filter element
   Replace damaged
5. Assembly:
   Assembly:
   - Cover air filter box (along with gaskets)

Downloaded from www.Manualslib.com manuals search engine

CAUTION:

Never run the engine without the element of air filter installed. The unfiltered air cause rapid wear of engine parts and may damage it.

NOTE:
Make sure the air filter element is installed correctly in the filter housing of air.

CHECK CARBURETOR AND UNON CONNECTION FILTER HOUSING AIR

1. Remove:
   - Seat
   - Fuel tank
   - Refer to "GENERAL CHASSIS".
   - On page 4-2
2. Check:
   - Carburetor Union "1"
   - Cover air filter box "2"
   - Cracks / dañadoReemplácelo

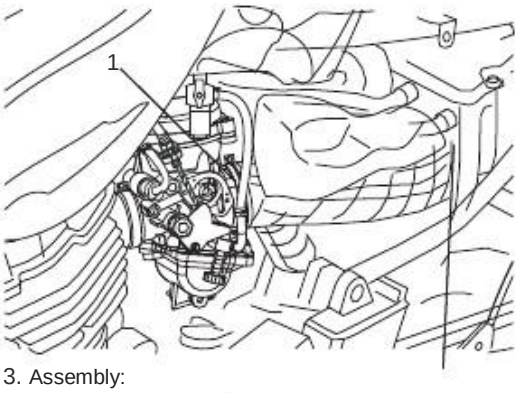

3. Assembly:
   - 2
   - Fuel tank
   - Side cover
   - Seat
   - Refer to "GENERAL CHASSIS"
   - On page 4-2

CHECK THE BREATH OF THE TUBE HEAD

1. Remove:
   - Seat
   - Refer to "GENERAL CHASSIS"
   - On page 4-1
   - Side cover (left)
2. Check:
   - Breathing tube of the stock "1"
   - ReempláceloGrietas / damaged
   - Connect loose connections correctly.

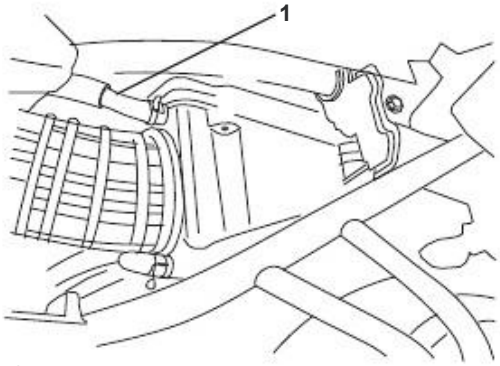

3. Assembly:
   - Fuel tank
   - Seat
   - Refer to "GENERAL CHASSIS"
   - On page 4-2

CHECK THE EXHAUST SYSTEM

1. Check:
   - Silencer "1"
     ReempláceloGrietas / damaged
   - Exhaust seal "2"
     Exhaust gas ReempláceloFugas
2. Check:
   - Torque
   - Nuts Muffler "3"
   - Screw the silencer "4"
   - Screw the silencer "5"
   -
   -

	Muffler Nut **15 Nm (bottom left)** **Screw the silencer** **20 Nm (2.0m.kg, 15ft.lb)** **Screw the silencer (bottom right)** **12 Nm (1.2m.kg, 9ft.lb)**

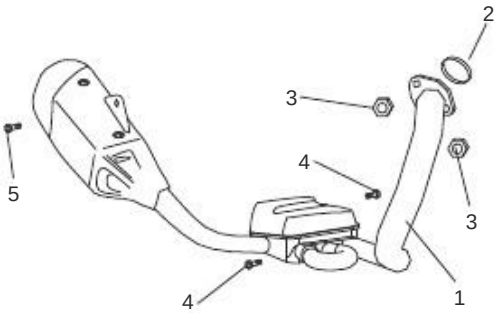

Downloaded from www.Manualslib.com manuals search engine

CHECK THE FILTER WRENCH FUEL

1. Check:
   •Fuel pipe "1"
   ReempláceloGrietas / damaged

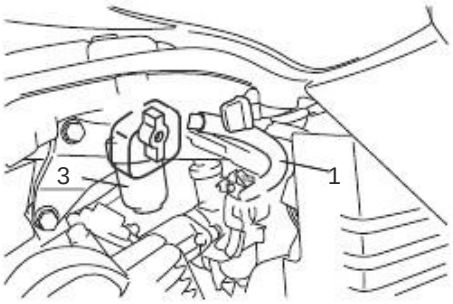

•Fuel filter "1"
Tainted / Damaged Replace the fuel wash.

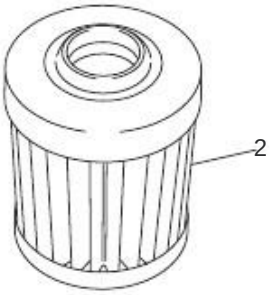

▼▼▼▼▼▼▼▼▼▼▼▼▼▼▼▼▼▼▼▼▼▼▼▼▼▼

a. Turn fuel valve to "OFF"
b. Remove the filter cup wrench fuel "3".
c. Drain the fuel.
d. Check the filter of the fuel cock.
   Clean if dirty
   ReempláceloDañado
e. Install the filter bowl of the fuel cock.

▲▲▲▲▲▲▲▲▲▲▲▲▲▲▲▲▲▲▲▲▲▲▲▲▲▲

Downloaded from www.Manualslib.com manuals search engine

CHASSIS

ADJUSTING THE REAR BRAKE DRUM

1. Check:
   Free pedal brake "a"
   Set out of specification

	Free game **15.0-20.0 mm**

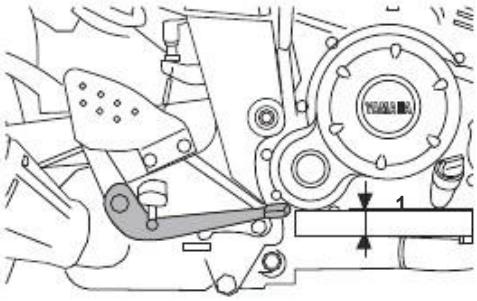

2. Adjust
   Free pedal brake

a. Turn the adjusting nut "1" in direction "a"
   or "b" to obtain the specified free play
   the brake pedal.

Direction "a" **The free play of the brake pedal is increased** **Direction "b"** **The free play of the brake pedal is decreased**

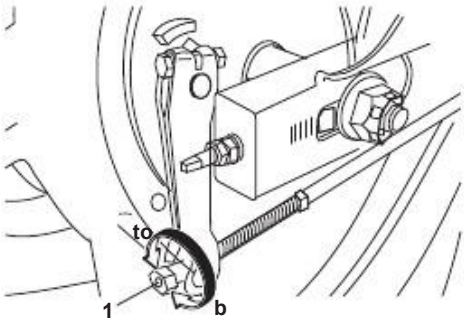

CAUTION

After adjusting the pedal free play brake, make sure the brake is not dragging.

3. Adjust
   Switch the rear brake light
   See "SWITCH ADJUSTMENT THE REAR BRAKE LIGHT. "
   On page 3-15

CHECKING THE BRAKE FLUID LEVEL

1. Place the vehicle on a flat surface.

NOTE:

Drive your vehicle to the center support
Make sure the vehicle is vertical

2. Check:
   Brake fluid level.
   Below the minimum level mark,
   liquid add recommended brake
   to the correct level

	Liquid preferred **DOT 3 or DOT 4**

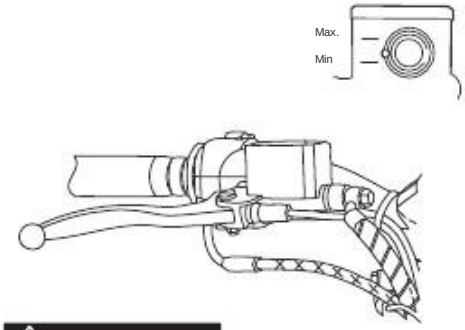

WARNING

Use only recommended brake fluid, other fluids can cause damage brake in the rubber seals, causing leaks and loss braking efficiency. Refill with the same type Brake fluid that is already in the system, the mixture of fluids can cause a chemical reaction harmful that would cause a malfunction brakes
When refilling, be careful not to get water in the master cylinder. Significantly decreases water boiling point fluid and may cause in vapor.

CAUTION

Brake fluid can damage the surfaces painted or plastic. Immediately clean any spilled brake fluid

NOTE:

In order to ensure a correct reading of the brake fluid level, check that the top of the master cylinder is horizontal.

Downloaded from www.Manualslib.com manuals search engine

CHECKING THE BRAKE FRONT

The procedure applies to all brake pads.

1. Operate the front brake.
2. Check:
   Front brake pads
   Tread wear indicators "1" almost touch the
   Replace brake disc game
   brake pads. See
   "FRONT BRAKE" on page 4-20

1

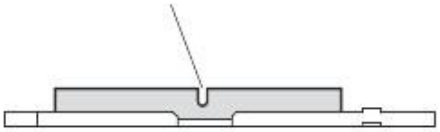

CHECKING THE BRAKE HOSE

1. Check:
   Brake Hose
   Cracks / damage / desgasteReemplazar

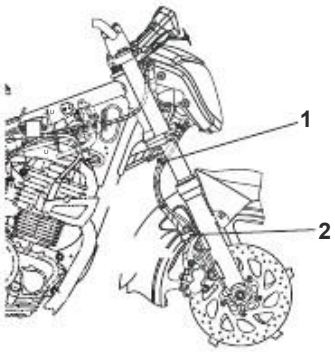

2. Check
   Clamp the brake hose
   Loose Tighten the clamp
3. Support the vehicle and apply the brake front several times.
4. Check:
   Brake Hose
   Leaking brake fluid Replace
   See damaged hose
   "FRONT BRAKE" on page 4-16

CHECKING BRAKE BANDS REAR

1. Operate the front brake.
2. Check:

   Tread wear indicators "1" strips brake
   Reaches the wear limit mark "2"
   Replace the brake bands game.
   Refer to "FRONT BRAKE"
   on page 4-26

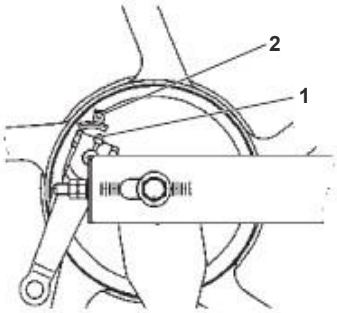

ADJUSTING THE LIGHT SWITCH REAR BRAKE

NOTE:
The rear brake switch is actuated by the movement of the brake pedal. When the light switch rear brake is set correctly, when the light comes on immediately before the start of braking effect.

1. Check:
   Operation of the brake light.
   Wrong Set.
2. Fit:
   Operation of the brake light

a. Hold the main body "1" switch rear brake and turn the adjusting nut "2" in the direction "a" or "b" until the brake light lights at the right time.

Direction "a"
Brake light comes on before.
Direction "b"
Brake light comes on later.

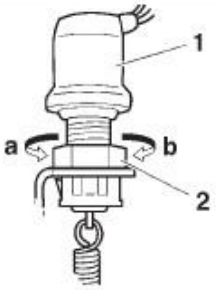

BLEEDING BRAKE SYSTEM HYDRAULIC

WARNING

Make the drain hydraulic brake system provided that: The system is disassembled.
A brake hose is removed,
removed or replaced.
The brake fluid level is very low.
Braking is not adequate.

Downloaded from www.Manualslib.com manuals search engine

1. Remove:
   Cover the brake master cylinder "1"

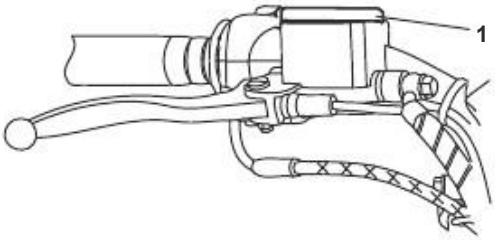

NOTE:

Be careful not to spill brake fluid
and do not let the master cylinder reservoir
overflow.
By making the purge hydraulic brake system,
Always make sure there is enough liquid
brake before operating the lever. If this
caution is ignored, the entry may occur
air in the hydraulic brake system,
significantly increasing the time
flushing procedure.
If the bleeding is difficult, it may be necessary to leave
the brake fluid settle for a few hours.
Repeat the procedure when small
Air bubbles are gone.

2. Purge:
   Hydraulic brake system
a. Fill the brake fluid reservoir to
   the appropriate level with the brake fluid
   recommended.
b. Assemble the diaphragm tank
   brake master cylinder.
c. Securely attach a plastic hose
   transparent "1" in the bleed screw 2.

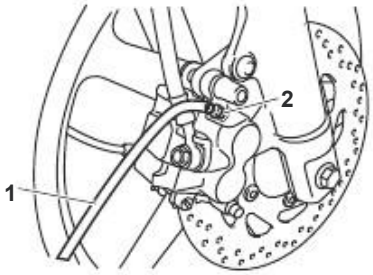

d. Place the other end of the hose
   a container.
e. Slowly operate the brake lever
   several times.
f. Completely pull the brake lever without
   release
g. Loosen the bleed screw.

NOTE:

When you release the bleed screw, the pressure will be
released and cause the contact of the lever
brake with the throttle.

h. Tighten the bleed screw and then release the
   brake lever
i. Repeat steps "e" to "h" until all
   the air bubbles have disappeared from
   brake fluid in the plastic hose.
j. Tighten the bleed screw to specification.

	Bleed screw: **6 Nm (0.6 m · kg, 4.3 ft · lb)**

k. Fill the brake fluid reservoir to the
   appropriate level with the brake fluid
   recommended.
   Refer to "CHECKING THE LEVEL
   BRAKE FLUID "on page 3-14

WARNING

**After making the brake system purge
hydraulic brake check function.**

3. Assembly:
   Cover the brake master cylinder

ADJUSTING THE SLACK CHAIN TRANSMISSION

NOTE:

The slack in the chain must be
be verified at the point of greatest tension.

CAUTION

**A chain tensioned excessively overloaded
engine and other vital parts and chain
You can get loose and damage the swingarm or
cause an accident. Therefore, keep the
tension within the drive chain
specification limits.**

1. I placed the vehicle on a flat surface

WARNING

**Support the vehicle safely to avoid
there is a risk of falling.**

NOTE:

Place the vehicle on the main stand, so
that the rear wheel is elevated.

Downloaded from www.Manualslib.com manuals search engine

2. Rotate the rear wheel to find the point with greater tension in the chain.
3. Check:
   Clearance of the transmission chain "a"
   Out of specification Adjust.

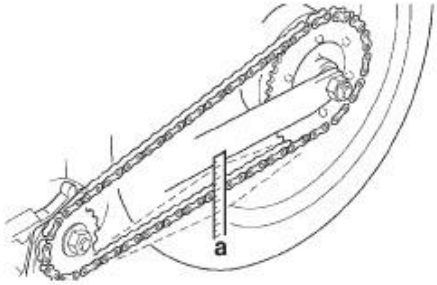

Chain slack transmission: 30-40 mm

NOTE:

Measure the clearance between the drive chain the drive shaft and the axis of the rear wheel.

4. Fit:
   Clearance of the transmission chain.

a. Loosen the nut on the brake rod "1"
b. Loosen the nut "2" of the wheel axle

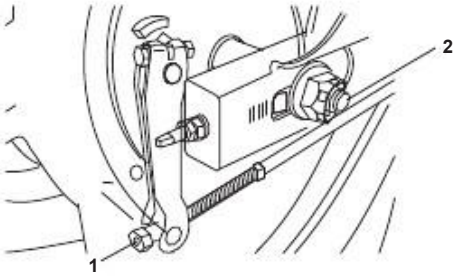

c. Turn the adjusting nuts "3" to adjust the gap voltage of the specified string.

Address to
The chain is tensioned
Address b
The chain is loosened

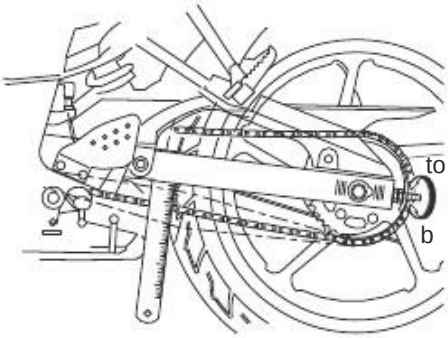

NOTE:

To maintain proper alignment of the wheel, adjust both sides equally.

e. Secure the axle nut to the torque wheel specified.

Spindle nut of the wheel: 90 Nm (9.0 m · kg, 65 ft · lb)

5. Fit:
   Free pedal brake
   See "SETTING **BRAKE REAR "** on page 3-14

6. Align the rear axle

a. To maintain proper alignment of the shaft. The reference lines "1" in the swing must correspond to the same diameter outside of the washer "2" on both sides.

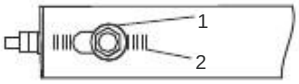

b. After adjusting, tighten each adjustment nut. Then tighten the axle nut to specified torque.

CHAIN LUBRICATION TRANSMISSION

The transmission chain consists of many parts interact. If the string transmission is not properly maintained, will wear quickly. Therefore, their Maintenance should be done, especially when the vehicle is used in a high powder.
It is recommended to use a chain cleaner and a lubricant that is suitable for chain with O-ring.

Recommended lubricant
Lubricant for chains with O-ring

1. ite all deposits of dust, dirt, mud, or oil. during wash and air dry.
2. Spray the chain with a degreaser chain to remove fat deposition for 5 minutes.

3. Clean the chain with a clean cloth and wait

Downloaded from www.Manualslib.com manuals search engine

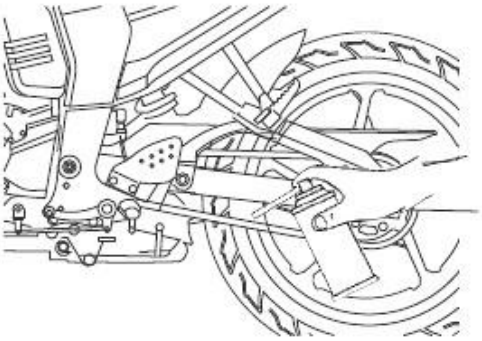

4Spray the lubricant inside the chain between inner and outer plates, rollers and bearings.
5After waiting for lubrication 15 minutes.
6Excess lubricant must be cleaned with a clean cloth before driving.

INSPECTION AND ADJUSTMENT COLUMN ADDRESS

1. Place the vehicle on a flat surface.

WARNING

Support the vehicle with safety to there is no risk of falling.

NOTE:

Drive your vehicle to the center support so that the front wheel is elevated.

2. Check:
   - Steering column.
   Hold the front fork legs and gently move the fork.
   Dura / flojaAjuste the column direction.
3. Remove:
   Upper yoke
   - See "COLUMN ADDRESS "on page 4-43
4. Fit:
   - Steering column
   -

a. Remove the lock washer "1" nut upper annular "2" rubber washer "3".

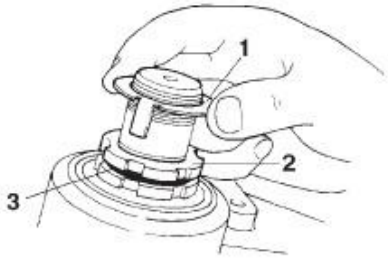

b. Tighten the lower ring nut "4" key of the nut on the steering column "5".

NOTE:

Set the torque wrench at a right angle for the nut wrench the steering column.

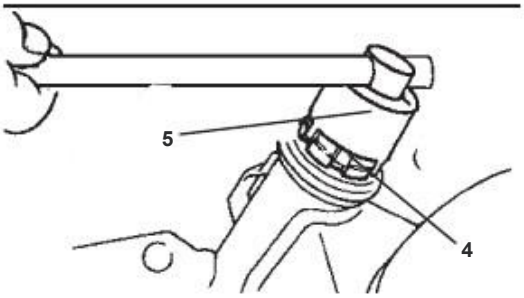

	Nut wrench address: YSST-721
	Lower ring nut (pair d starting torque) 33 Nm (3.3 m · kg, 24 ft · lb)

c. Loosen the lower ring nut "4" completely and then tighten to specification with the key of the nut of the steering column.

WARNING

Do not overtighten the lower ring nut.

	Lower ring nut (torque final torque) 22 Nm (2.2 m · kg, 16 ft · lb)

d. Check that the steering column is not loose or hard when you turn the fork completely in both directions. If it feels hard, remove the bottom bracket bearings and check the top and bottom.
Refer to "STEERING" on page 4-43.

e. Assemble the rubber washer "3".
f. Assemble the upper ring nut "2".
g. Tighten the nut finger upper annular "2" and align the slots of both ring nuts. If necessary, hold the lower ring nut tighten the nut until the upper annular slots are aligned.

NOTE:

Make sure the lock is properly seated into slots in the ring nuts "b"

Downloaded from www.Manualslib.com manuals search engine

5. Assembly:
   Upper yoke
   Refer to "STEERING COLUMN"
   on page 4-43

VERIFICATION OF THE FORK FRONT

1. Place the vehicle on a flat surface.

WARNING

Support the vehicle with safety to there is no risk of falling.

2. Check:
   - Inner tubes
     Damage / rasguñosReemplace.
   - Oil Seals
     AceiteReemplace leaks.
3. Keep the vehicle in vertical position and pull the front brake
4. Check:
   Operation of the front fork.
   - Pump the handle several times check if the front fork damping smoothly.
     IrregularRepare movement.
     Refer to "FRONT FORK"
     on page 4-35

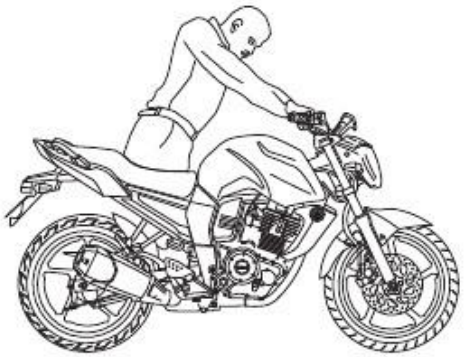

INSPECTION OF TIRES

The following procedure applies to both tires.

1. Check:
   - Tire pressure.
     EspecificaciónAjustar outside.

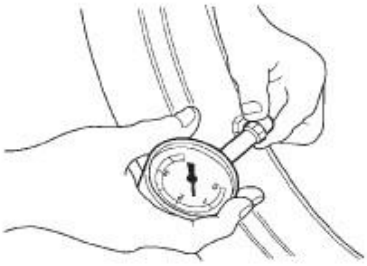

WARNING

The pressure should be checked and corrected when the temperature of the rim is equal at room temperature.
The pressure should be in accordance with total weight (including cargo, driver, passenger and accessories) and speed driving.
Driving the vehicle may overload cause damage to tires, loss of control or a serious accident.
NEVER OVERLOAD THE VEHICLE.

Air pressure of tires
(Measured on cold tires):
Front:
200 kPa (28 psi) (2.0 kgf / cm ²)
Rear:
225 kPa (33 psi) (2.25 kgf / cm ²)

WARNING

It is dangerous to drive with a tire worn. When the tread reaches the limit wear, replace the tire immediately.

2. Check:
   - Tire surface
     Damage / wear Replace the tire

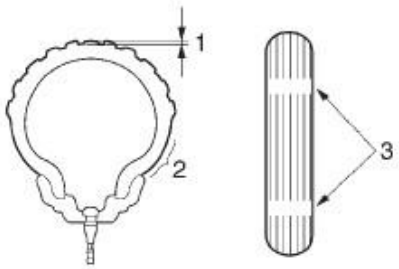

1. Depth of the tread
2. Side Band
3. Wear indicator

Downloaded from www.Manualslib.com manuals search engine

WARNING

Do not use tubeless tire on a wheel tires designed only for camera failures and avoid personal injury due to sudden deflation.
After extensive testing, the tires listed below have been approved by Yamaha for this model.
Front and rear wheels should be always the same manufacturer and same design. There is no guarantee management features that can be given if combined tires that have not been YAMAHA approved for this vehicle.

Front rim
Size
100/80-17M/C 52P
Manufacturer / Model:
MFR / ZAPPER-X

Rear tire
Size
140/60-R17M/C 63P
Manufacturer / Model:
MFR / ZAPPER revz

WARNING

The new tires have a relatively grip under the tread to that wear slightly. Therefore should flow about 100 km at a normal speed before driving at high speed.

NOTE:

For rims with rotation mark "1":
- Assemble the tire with the mark pointing in the direction of rotation of the wheel.
- Align the mark "2" with the mount point the valve.

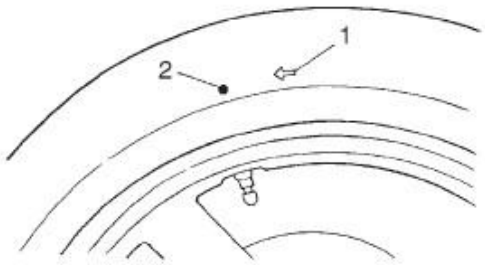

INSPECTION OF THE WHEELS

The following procedure applies to both wheels.

1. Check:
   Wheels.
   - Damage / deformacionesReemplazar.

WARNING

Never attempt any repairs wheels.

NOTE:

After a tire or a wheel has been changed, the wheel must be balanced.

INSPECTION AND LUBRICATION CABLES

The following procedure applies to internal and external cables

WARNING

The exterior of the damaged cable can cause corrosion in the cable and interfere with their movement. Replace cables and outdoor inside damaged as soon as possible.

1. Check:
   - Cable outer.
   Damnificadoreemplace.
2. Check:
   Operation of the cable.
   - IrregularLubrique movement.

Recommended lubricant
Engine oil or lubricant appropriate cable.

NOTE:

Hold the cable end in a vertical position and pour a few drops of lubricant on the cover of cable or use a suitable lubricating device

LUBRICATION LEVER CLUTCH

Lubricate the pivot points and moving parts metal-metal of the lever.

Recommended lubricant
Based grease lithium soap

Downloaded from www.Manualslib.com manuals search engine

LUBRICATING THE BRAKE LEVER

Lubricate the pivot points and moving parts metal-metal of the lever.

	Recommended lubricant **Silicone grease**

PEDAL LUBRICATION

Lubricate the pivot points and moving parts metal-metal of the lever.

	Recommended lubricant **Based grease lithium soap**

LUBRICATION SIDESTAND

Lubricate the pivot points and moving parts metal-metal of the lever.

	Recommended lubricant **Based grease lithium soap**

LUBRICATING THE REAR SUSPENSION

Lubricate the pivot points and moving parts metal-metal of the lever.

	Recommended lubricant **Based grease lithium soap**

ADJUSTING THE REAR SHOCK

The following procedure applies to the adjustment rear shock.

WARNING

•Support the vehicle with safety to there is no risk of falling.

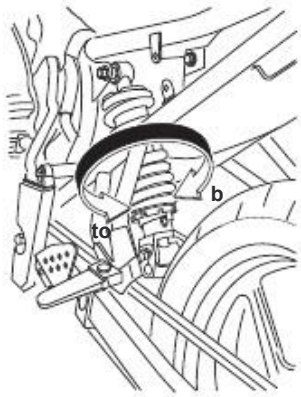

	Adjuster rear shock **YSST-821**

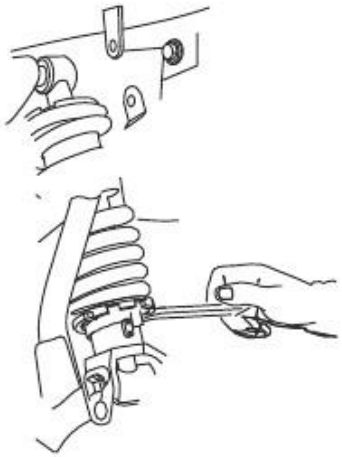

CAUTION

Never go beyond the maximum or minimum adjustment positions

1. Fit:
• Spring Preload

a. Turn the adjustment ring "1" in direction "a" or "b"
b. Aligning the desired position on the ring fit with the cap "2".

Address to	The spring preload increased (suspension harder)
Address b	The spring preload decreases (Suspension softer)

Adjustment positions
Minimum (soft): 1
Standard: 4
Maximum (hard): 7

Downloaded from www.Manualslib.com manuals search engine

ELECTRICAL

CHECKING AND CHARGING THE BATTERY
See "Components
ELECTRIC "on page 7-34

FUSE INSPECTION
See "Components
ELECTRIC "on page 7-34

CHANGE THE BULB FAROLA
The following procedure applies to the light bulb dipped and main beam.

1. Remove:
   •Side cover "1"

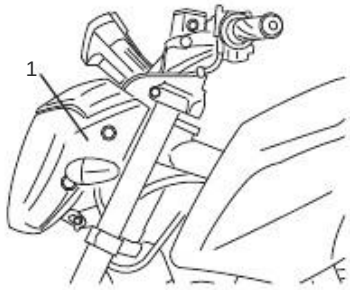

2. Disconnect:
   •Connect the turn signal indicator "1" from the end.

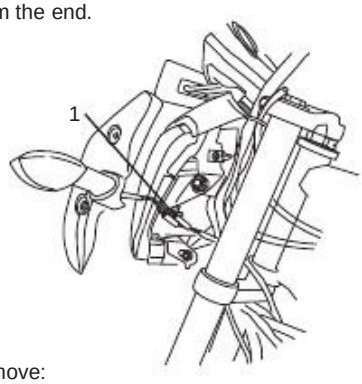

3. Remove:
   • Screw the lamp "1" from the end.
   • Adjustment screw light "2".

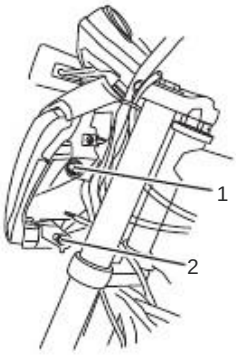

4. Remove:
   • Lamp "1" lamp holder "2"

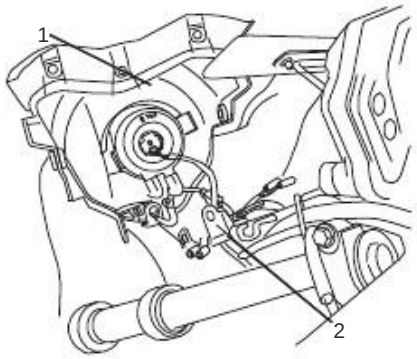

5. Remove:
   • Lamp bulb cover "1"
   •Lamp bulb holder "2"

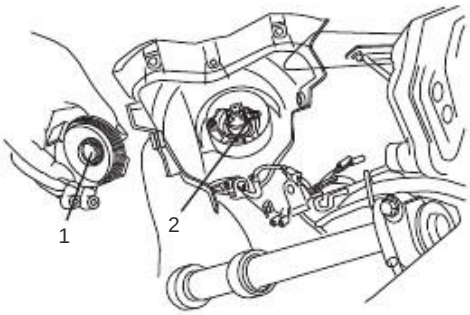

6. Lamp bulb holder "2"
   •Lamp bulb "1"

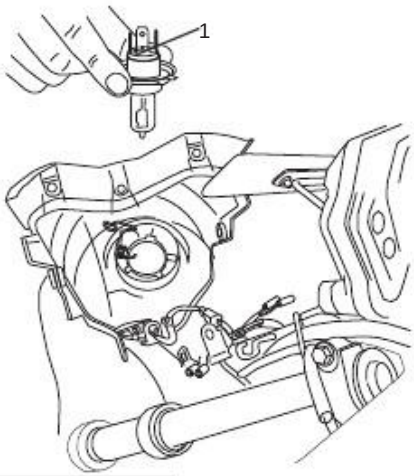

WARNING

Since the lamp bulb may be extremely hot, keep products flammable and hands away from the bulb until it has cooled.

Downloaded from www.Manualslib.com manuals search engine

4. Assembly:
   •Lamp bulb
   Secure the lamp bulb again
   the lamp bulb holder

CAUTION:
Avoid touching the glass bulb of the Cembran to keep it free of oil, it otherwise the transparency of glass, the life of bulb and the brightness will be affected negatively. If the lamp bulb is dirty, thoroughly clean with a cloth moistened with alcohol or a lacquer thinner.

5. Assembly:
   • Lamp bulb holder
6. Assembly:
   • Lamp bulb cover

BEAM ADJUSTMENT OF FAROLA
The following procedure applies to adjust the light beam of the lamp.

Loosen the screw and move the lamp the lamp in the following manner to adjust the beam of the lamp

Address to **The beam of light from the lamp low** **Address b** **The beam of light from the lamp goes**

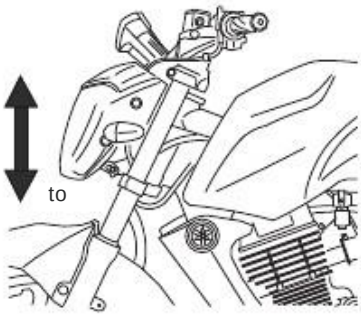

AUXILIARY LIGHT REPLACEMENT
The following procedure applies to the bulb low beam and high beam.

1. Remove:
   •Side covers (See change bulb of the lamp) on page 3-22
   •The connections of the signal indicating turn (See change the bulb lamp) on page 3-22
2. Remove:
   • Bulb auxiliary "1 as shown in illustration ".

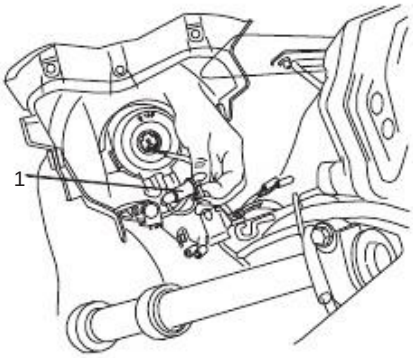

CHANGE BULB REAR / BULB BRAKE

1. Remove:
   •Screw "1"
   •Lens "2"

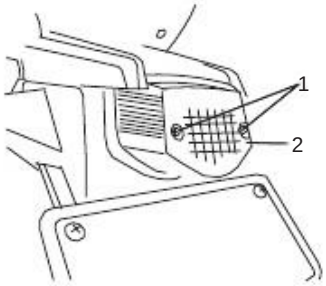

2. Push the bulb "1" and turn gently counterclockwise.

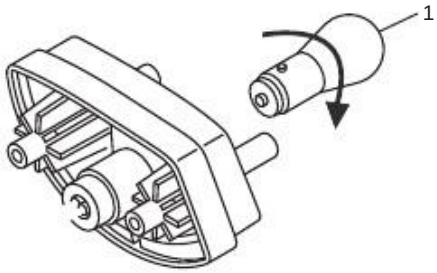

Downloaded from www.Manualslib.com manuals search engine

TO REPLACE THE REAR LIGHT

3. Remove:
   - Coupler taillight "1"
   - Screws "2" from inside the mudguard

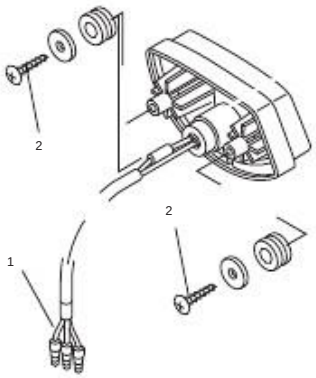

CHANGE INDICATOR LIGHT BULB DRAWING

1. Remove:
   - Screw "1" from the indicator light
   - Lens "2" of light
2. Push the bulb "3" and gently turn counterclockwise.

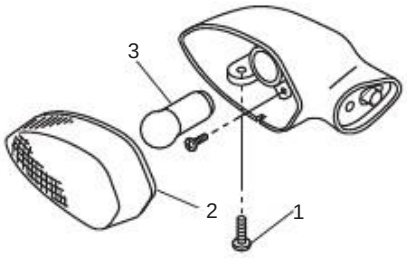

Downloaded from www.Manualslib.com manuals search engine

CHASSIS

GENERAL CHASSIS 4-1
ASSEMBLY OF THE AIR FILTER HOUSING 4-5

FRONT WHEEL 4-6
REMOVING THE FRONT WHEEL 4-8
DISASSEMBLY OF THE FRONT WHEEL 4-8
CHECKING THE FRONT WHEEL 4-9
FRONT WHEEL ASSEMBLY TERA 4-8
FRONT WHEEL ASSEMBLY (DISCO) 4-9

REAR WHEEL 4-12
REMOVING THE REAR WHEEL 4-14
CHECKING THE REAR WHEEL 4-14
CHECKING THE REAR WHEEL HUB 4-14
CHECKING AND REPLACING THE REAR WHEEL SPROCKET 4-14
REAR WHEEL ASSEMBLY 4-15
REAR WHEEL ASSEMBLY (DRUM) 4-15

FRONT BRAKE 4-16
INTRODUCTION 4-19
CHECKING THE FRONT BRAKE DISC 4-19
CHANGE OF FRONT BRAKE PADS 4-20
REMOVING THE FRONT BRAKE CALIPER 4-21
DISASSEMBLY OF THE FRONT BRAKE CALIPER 4-21
CHECKING THE FRONT BRAKE CALIPER 4-21
ASSEMBLY OF THE FRONT BRAKE CALIPER 4-22
ASSEMBLING THE FRONT BRAKE CALIPER 4-22
REMOVING THE FRONT BRAKE MASTER CYLINDER 4-23
CHECKING THE FRONT BRAKE MASTER CYLINDER 4-23
ASSEMBLY FRONT BRAKE MASTER CYLINDER 4-23
INSTALLING THE FRONT BRAKE MASTER CYLINDER 4-23

REAR BRAKE 4-26
CHECKING THE REAR BRAKE BANDS 4-27
HOLDER ASSY REAR BRAKE BANDS 4-27
LIMIT CHECKING BRAKE DRUM 4-28

HANDLE 4-30
REMOVING THE HANDLEBAR 4-32
CHECK THE HANDLE 4-32
HANDLEBAR ASSEMBLY 4-32

FRONT FORK 4-35
REMOVING THE FRONT FORK BARS 4-38
DISASSEMBLY OF THE BAR OF THE FRONT FORK 4-38
CHECKING THE FRONT FORK BARS 4-39
ASSEMBLY OF THE BAR OF THE FRONT FORK 4-39
ASSEMBLING THE FRONT FORK BARS 4-42

Downloaded from www.Manualslib.com manuals search engine

CHASSIS

STEERING COLUMN 4-43
REMOVING THE LOWER BRACKET 4-45
VERIFICATION OF THE STEERING COLUMN 4-45
COLUMN MOUNT DIRECTION N 4-45

REAR SHOCK 4-47
REMOVING THE REAR SHOCK 4-48
CHECKING THE REAR SHOCK 4-48
REAR SHOCK MOUNTING 4-48

SWING 4-49
REMOVING THE ROCKER 4-51
VERIFICATION OF OVERHEAD 4-51
TILT MOUNT 4-51

CHAIN 4-53
CHECKING THE DRIVE CHAIN 4-54
MOUNT CHAIN 4-55

Downloaded from www.Manualslib.com manuals search engine

GENERAL CHASSIS

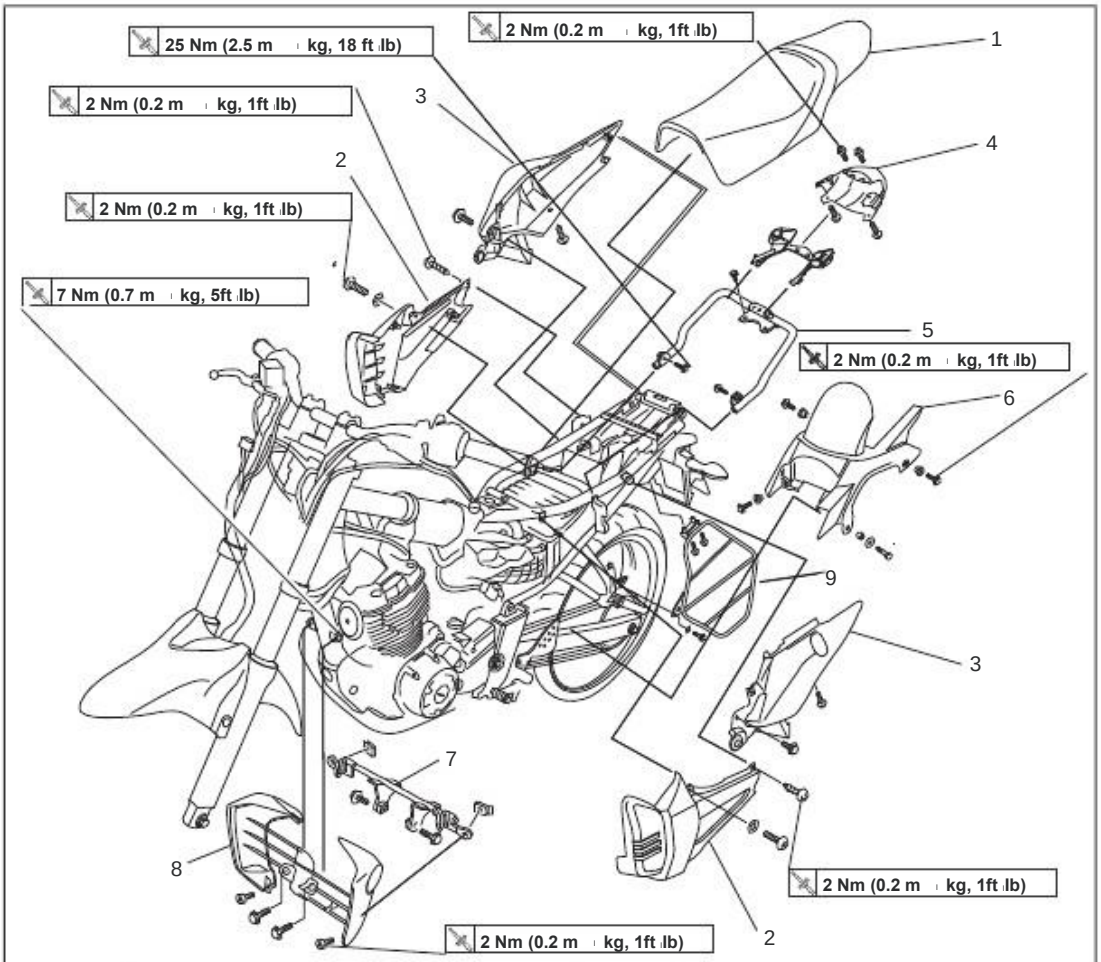

Order	Procedure / Parts to remove	Amount	Observations
1	Seat	1	
2	Side Cover 1 & 2	1/1	
3	Side Cover 3 & 4	1/1	
4	Tail cover	1	
5	Manigueta	1	
6	Mud guard	1	
7	Support air intake	1	
8	Air intake	1	
9	Footrest Protector	1	
			For assembly, reverse the procedure disassembly.

Downloaded from www.Manualslib.com manuals search engine

Removing the fuel tank

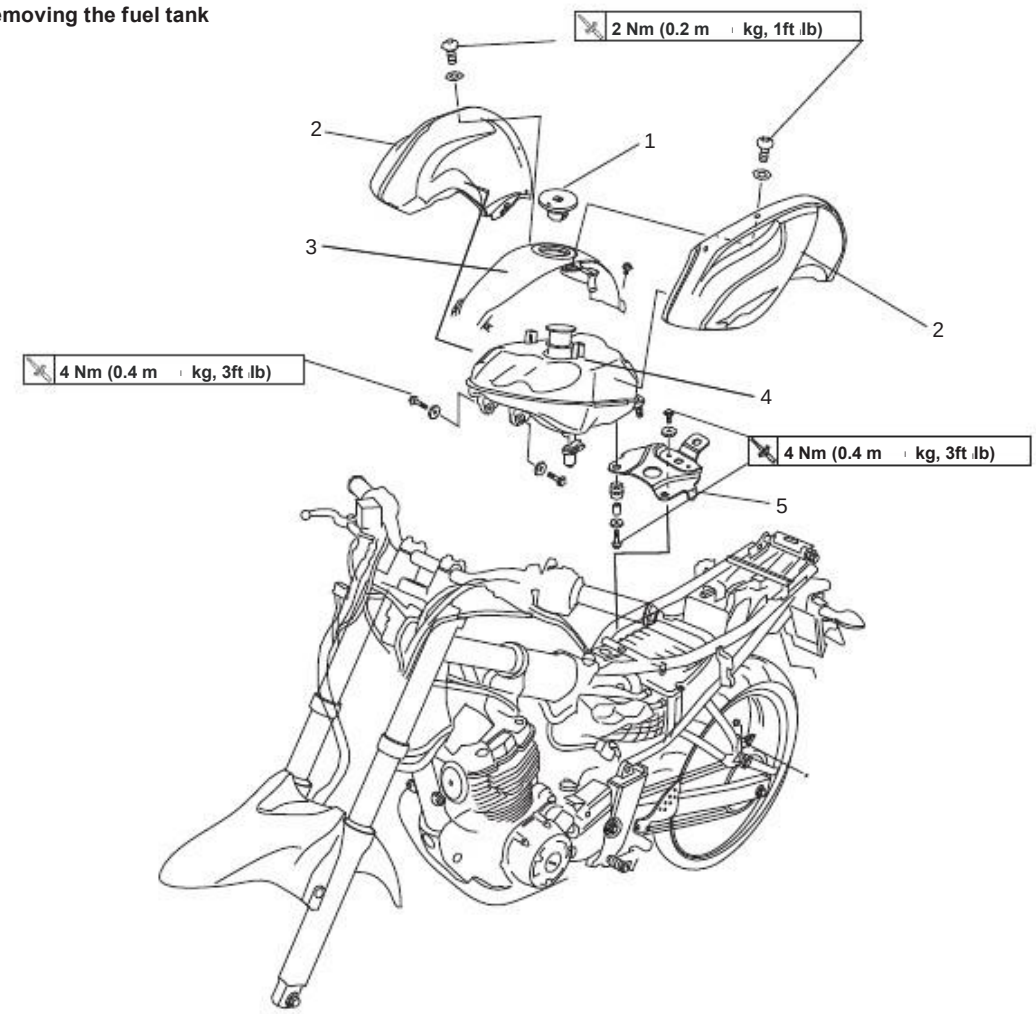

Order	Procedure / Parts to remove	Amount	Observations
	Side Cover 1 & 2, Seat		Refer to "GENERAL CHASSIS" on page 4-1
1	Fuel Tank Cap	1	
2	Fuel Tank Cap	2	
3	Side covers fuel tank LH & RH	1	
4	Upper Deck Fuel Tank	1	NOTE: Disconnect the fuel lines and fuel drain pipe before removing the fuel tank.
5	Fuel tank	1	For assembly, reverse the procedure disassembly

Downloaded from www.Manualslib.com manuals search engine

Removing the lamp and the meter

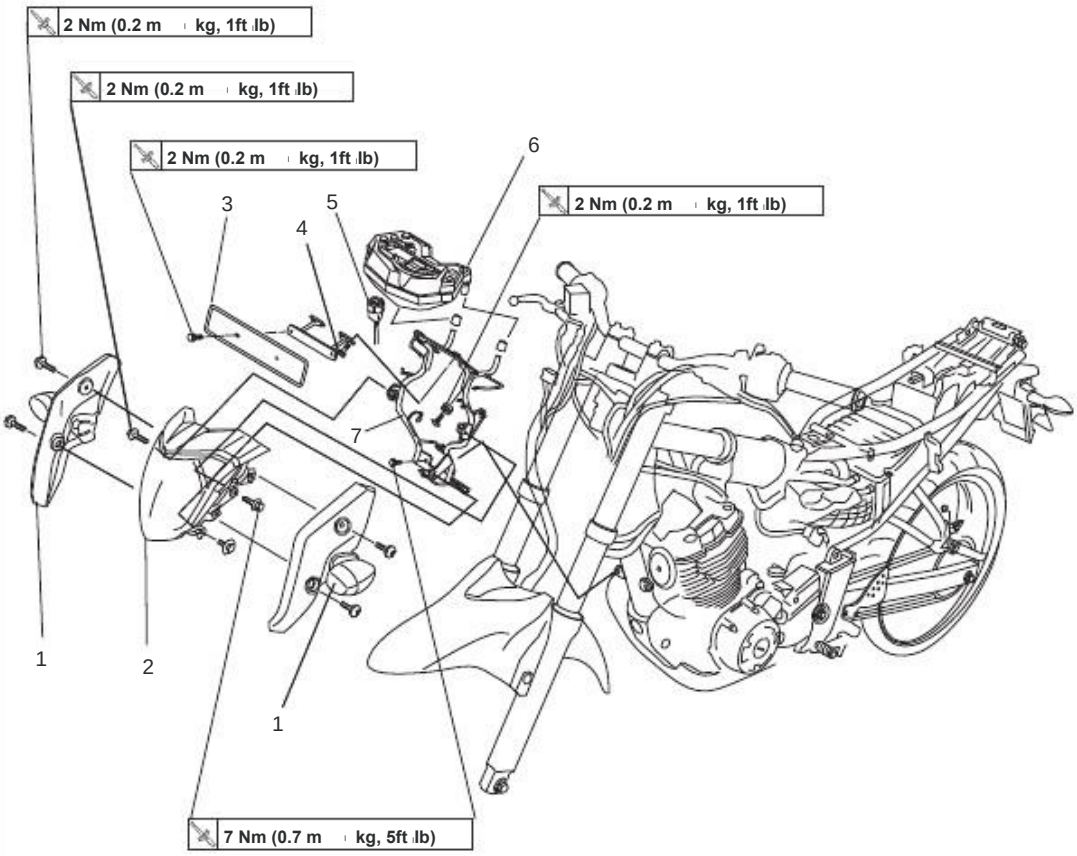

Order	Procedure / Parts to remove	Amount	Observations
1	Side covers	2	
2	Full Streetlight	1	
3	License plate	1	Disconnect
4	Support the license plate	1	
5	Connecting the meter	1	
6	Meter	1	
7	Lamp holder	1	
			For assembly, reverse the procedure disassembly.

Downloaded from www.Manualslib.com manuals search engine

Removing the air filter full

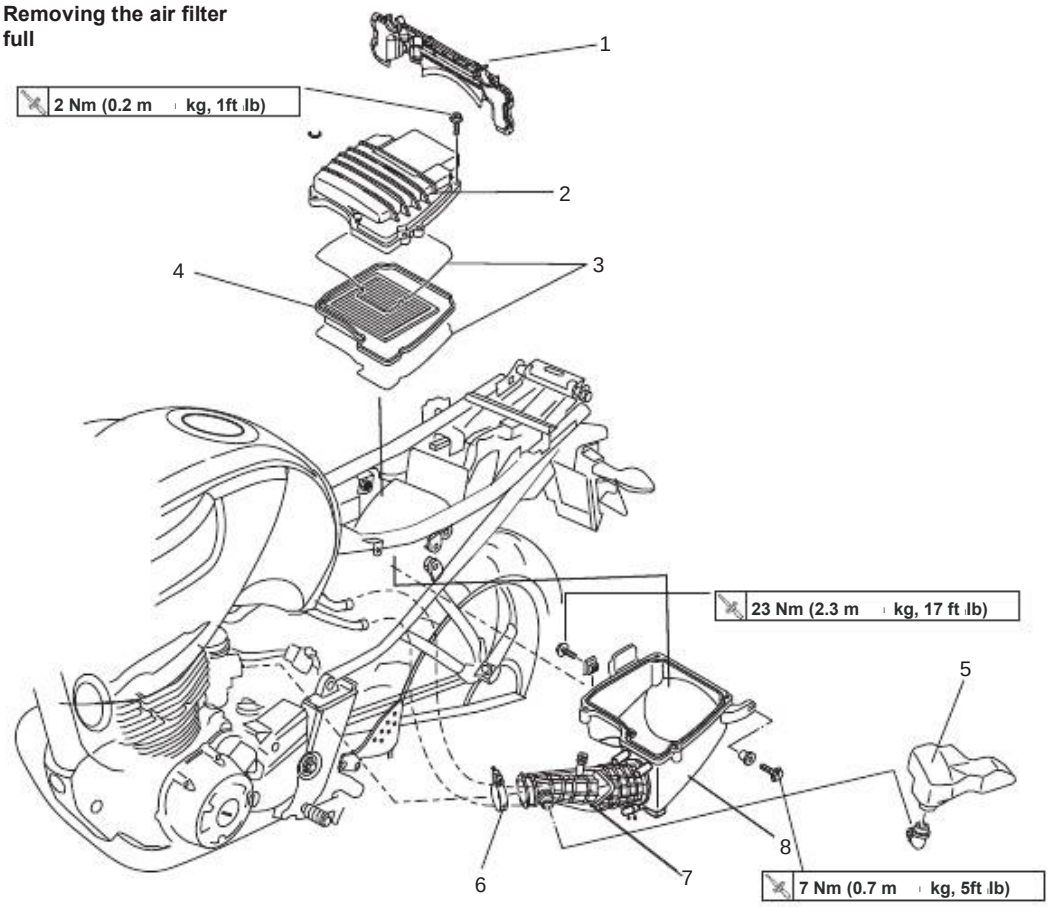

Order	Procedure / Parts to remove	Amount	Observations
	Seat, side cover 1 & 2		Refer to "GENERAL CHASSIS "on page 4-1
1	Filter Box Cover	1	
2	Filter housing cover	1	
3	Seals air filter	2	
4	Air filter	1	
5	Resonator	1	
6	Hose Clamp Air Filter	1	
7	Air Cleaner Hose	1	
8	Air filter box	1	
			For assembly, reverse the procedure disassembly.

Downloaded from www.Manualslib.com manuals search engine

INSTALLING THE AIR FILTER HOUSING

1. Install:
   - Bracket air filter binding

NOTE;

Align the projection "a" in the filter housing air slot "b" in the union of air filter.

Downloaded from www.Manualslib.com manuals search engine

FRONT WHEEL

Removing the front wheel and brake disc

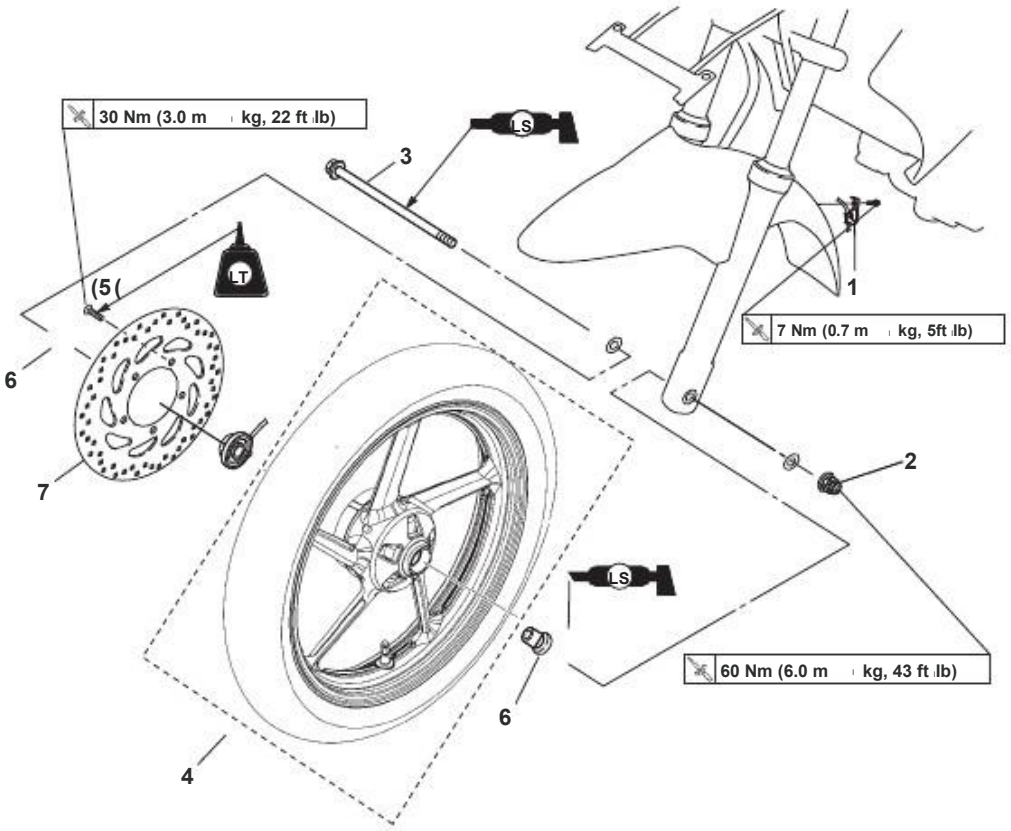

Order	Procedure / Parts to remove	Amount	Observations
1	Sensor cable clamp speed	1	
2	Spindle nut of the front wheel	1	
3	Front wheel axle	1	
4	Front Wheel	1	
5	Speed sensor	1	
6	Spacer	1	
7	Brake disc	1	
			For assembly, reverse the procedure disassembly.

Downloaded from www.Manualslib.com manuals search engine

Disassembly of the front wheel

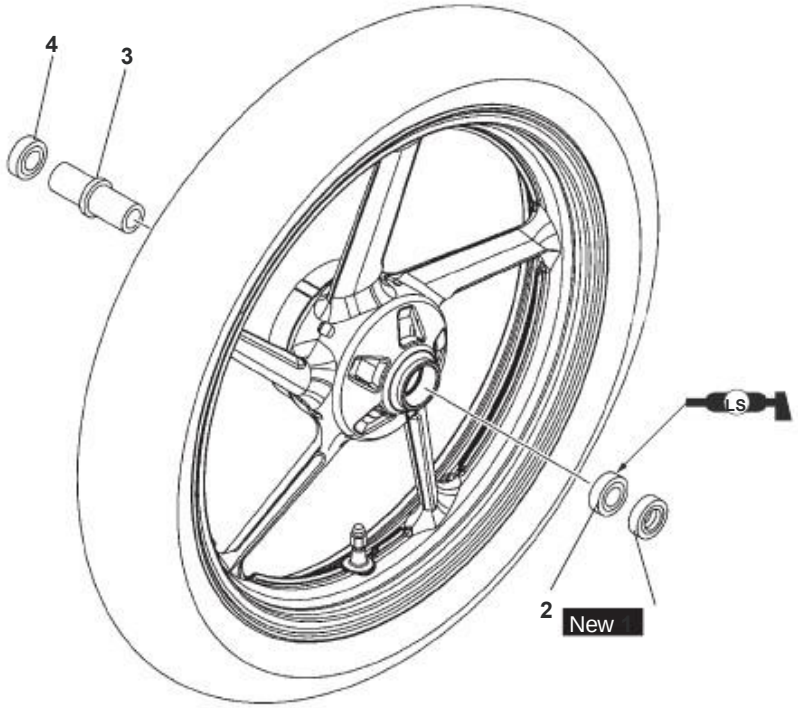

Order	Procedure / Parts to remove	Amount	Observations
1	Oil Seal	1	
2	Bearing	1	
3	Spacer	1	
4	Bearing	1	
			For assembly, reverse the procedure disassembly.

Downloaded from www.Manualslib.com manuals search engine

REMOVING THE FRONT WHEEL

1. Place the vehicle on a flat surface.

WARNING

Support the vehicle safely to avoid there is a risk of falling.

2. Survey:
   - Front wheel

NOTE:

Place the vehicle on a suitable support, so that the front wheel is lifted.

3. Remove:
   - Front Wheel
   - Speed Sensor Unit
   - Spacer

NOTE:

Do not press the brake lever when removing the front wheel.

DISASSEMBLY OF THE FRONT WHEEL

1. Remove:
   - Oil Seal
   - Wheel Bearings

a. Clean the outside of the wheel hub front.

b. Remove the oil seal "1" with a flathead screwdriver.

NOTE:

To avoid damaging the wheel, place a cloth "2" between the screwdriver and the surface of the wheel.

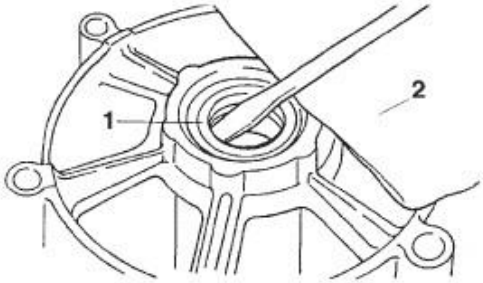

c. Remove the wheel bearings with a bearing puller.

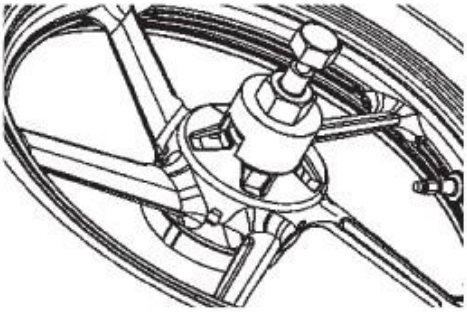

VERIFICATION FRONT WHEEL

1. Check:
   - The ruedaEje of
   Roll the wheel axle on a flat surface.
   Replace warping.

WARNING

Do not attempt to straighten a wheel axle.

2. Check:
   - Rim
   - delanteraRueda
   Damage / wear Replace.
   Refer to "CHECKING TIRES "on page 3-19
   Refer to "CHECKING WHEEL "on page 3-20

3. Measure:
   - Radial deviation of the wheel "1"
   - Lateral deviation of the wheel "2"
   Outside the specified limits Replace.

Limiting radial deflection of the wheel
1.0 mm
Limit lateral deflection of the wheel
0.5 mm

Downloaded from www.Manualslib.com manuals search engine

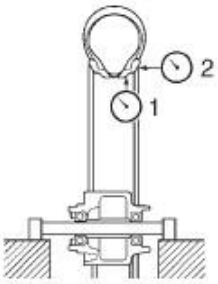

4. Check:
   •Wheel bearings
   The front wheel rotates irregularly shaped or this loose Replace bearings wheel.
   • of aceiteSello
   Damage / wear Replace.

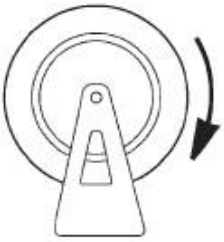

FRONT WHEEL ASSEMBLY

1. Assembly:
   •Wheel bearings
   • oil Seal

a. Assemble the bearings and oil seal new in the reverse order of disassembly.

CAUTION

Do not touch the inside track "1" or areas "2" of wheel bearings. The contact use only the outer race "3".

NOTE:

Using a wrench "4" that matches the diameter outer bearing and oil seal.

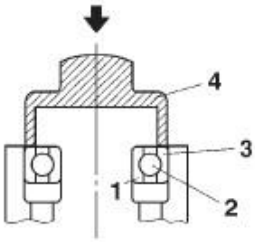

FRONT WHEEL ASSEMBLY (DISCO)

1. Ensemble: I
   • Brake delantero.Disco

	Screw the front brake disc 30 Nm (3.0 m · kg, 22 ft · lb) LOCTITE ®

NOTE:

Tighten the brake disc in stages and in a crisscross pattern.

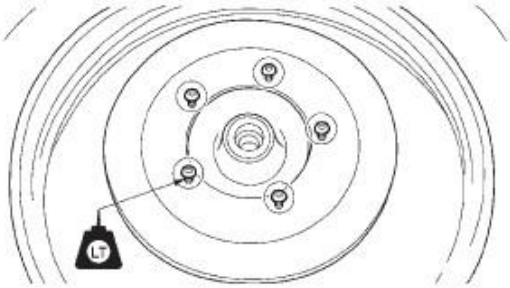

2. Check:
   • Brake delanteroDisco
   Refer to "CHECKING THE DISCO FRONT BRAKE "on page 4-19
3. Lubricate:
   • ruedaEje of
   • Seal aceiteBordes
   • velocidadBordes sensor

	Recommended lubricant Based grease lithium soap

4. Assembly:
   • delanteraRueda

NOTE:

Assemble the tire and wheel marked "1", pointing in the direction of rotation of the wheel.

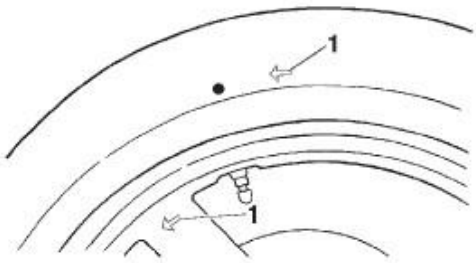

Downloaded from www.Manualslib.com manuals search engine

5. Assembly:
- velocidadUnidad sensor

NOTE:
Make sure the speed sensor and the wheel hub are installed with the two interlocking projections into the two slots respectively.

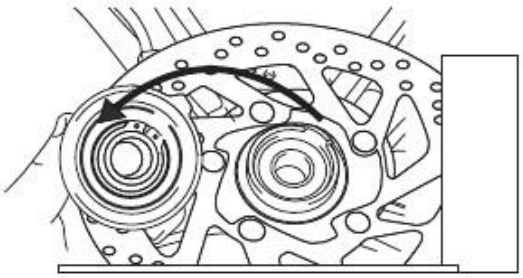

6. Assembly:
- delanteraRueda

NOTE:
Make sure the slot "a" enters the tube foreign and fits over the top "b" in the unit Speed sensor.

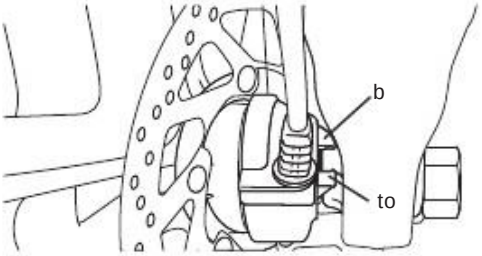

7. Press:
- ruedaEje of

	Wheel axle **60 Nm (6.0 m · kg, 43 ft · lb)**

WARNING
Make sure the brake hose is properly guided.

CAUTION
Before tightening the wheel axle nut, push hard on the handlebar several times and check if the front fork bounces smoothly.

Downloaded from www.Manualslib.com manuals search engine

Downloaded from www.Manualslib.com manuals search engine

Removing the rear wheel and brake bands holder

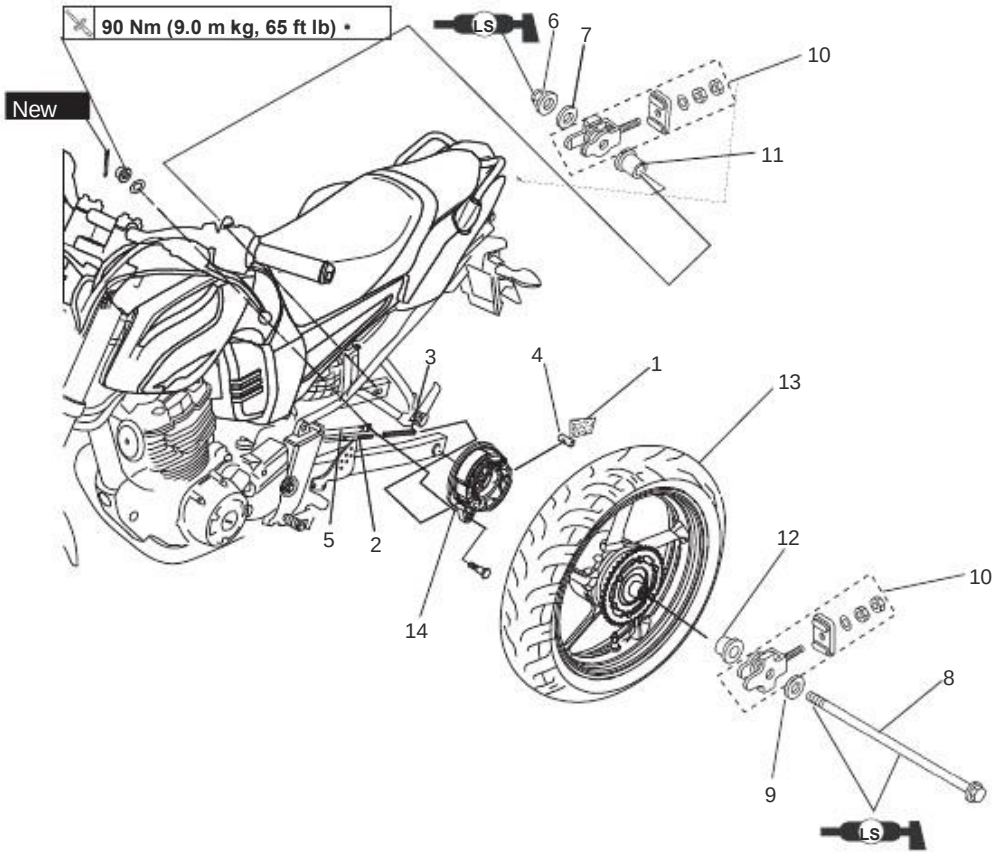

Order	Procedure / Parts to remove	Amount	Observations
1	Adjusting nut brake rod	1	
2	Brake rod	1	
3	Spring	1	
4	Pin	1	
5	Tension bar	1	
6	Nut	1	
7	Washer	1	
8	Rear wheel axle	1	
9	Washer	1	
10	Chain tensioner	2	
11	Spacer	1	
12	Spacer	1	
13	Rear Wheel	1	
14	Porta bands	1	
			For assembly, reverse the procedure disassembly.

Downloaded from www.Manualslib.com manuals search engine

Disassembly of the rear wheel

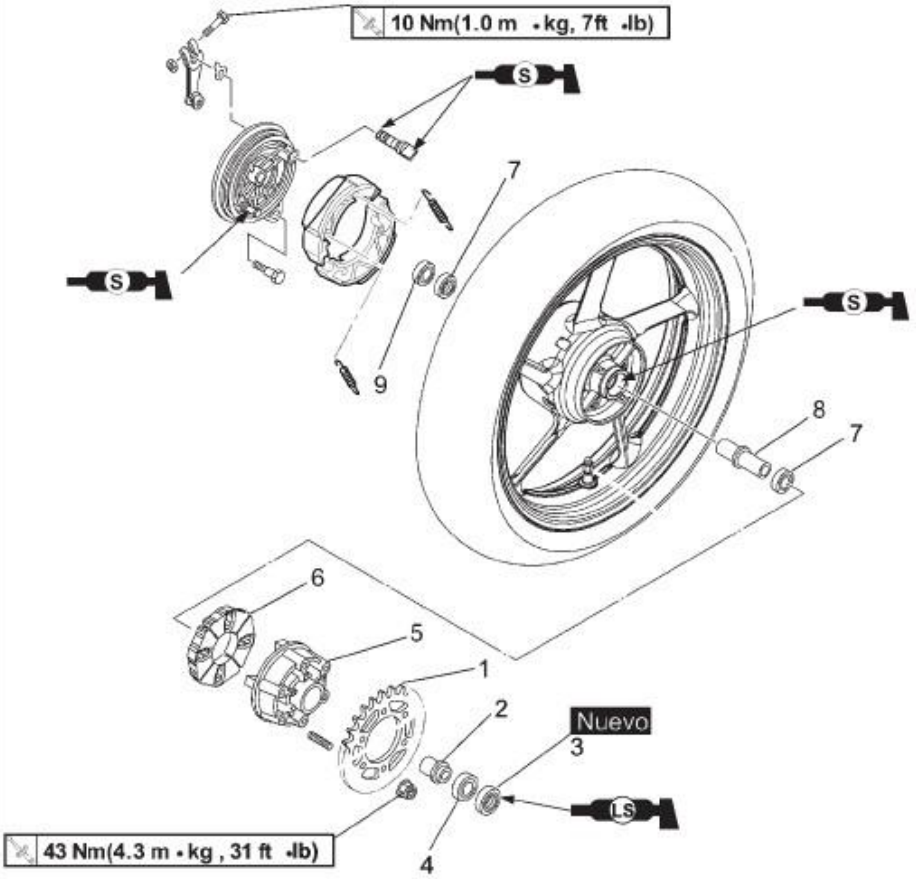

Order	Procedure / Parts to remove	Amount	Observations
1	Rear wheel sprocket	1	
2	Necklace	1	
3	Oil Seal	1	
4	Bearing	1	
5	Rear-wheel hub	1	
6	Shock rear drive hub	4	
7	Bearing	2	
8	Spacer	1	
9	Oil Seal	1	
			For assembly, reverse the procedure disassembly.

Downloaded from www.Manualslib.com manuals search engine

REMOVING THE REAR WHEEL (DRUM)

1. Place the vehicle on a flat surface.

WARNING

Support the vehicle with safety to there is no risk of falling.

NOTE:

Place the vehicle on a suitable support, so that the front wheel is lifted.

2. Remove:
   Adjusting nut brake rod "1"
   Brake rod "2"
   Spring "3"
   Pin "4"

NOTE:

Press down the brake pedal to remove the pin from the brake rod.

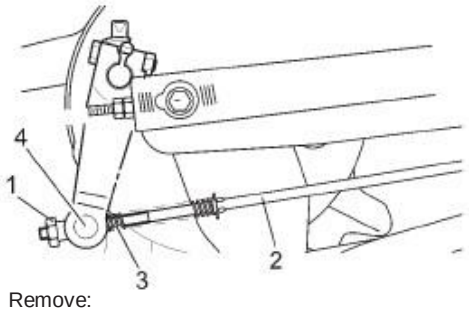

3. Remove:
   Rear Wheel

NOTE:

Push the rear wheel forward and remove the transmission chain wheel sprocket rear.

VERIFICATION REAR WHEEL

1. Check:
   Wheel axle
   Rear Wheel
   Wheel bearings
   Oil Seals
   Refer to "CHECKING FRONT WHEEL "on page 4-8

2. Check:
   Rim
   Rear Wheel
   Damage / wear Replace.
   See "VERIFICATION TIRES "on page 3-19 and" CHECKING TIRE "on page 3-20

3. Measure:
   Radial deviation of the wheel
   Lateral deviation of the wheel
   Refer to "CHECKING FRONT WHEEL "on page 4-8

CHECKING THE REAR WHEEL

1. Check:
   Cube rear wheel traction
   Cracks / damage Replace.
   Bucket cushions traction rear wheel
   Damage / wear Replace.

CHECK AND REPLACE THE WHEEL REAR WHEEL GEAR

1. Check:
   Sprocket rear wheel
   More than 1/4 of tooth wear Replace the whole chain transmission sprocket motor and the sprocket of the rear wheel.
   DobladosReemplace teeth throughout the transmission chain, sprocket, and larueda rear wheel sprocket.

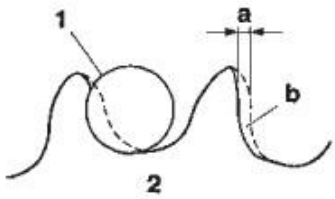

b. Correct
1. Transmission roller chain
2. Sprocket rear wheel

2. Replace:
   Sprocket rear wheel

a. Remove the anti-lock nuts of the sprocket of the rear wheel.
b. Clean the bucket Wheel drive back with a clean cloth, wipe on all surfaces in contact with the sprocket of the rear wheel.
c. Join a new cog in the rear wheel.

	Nuts sprocket rear wheel 43 Nm (4.3 m · kg, 31 ft · lb)

Downloaded from www.Manualslib.com manuals search engine

NOTE:

- Sprocket assembly of the rear wheel manufacturer's brand out.
- Tighten self-locking nuts in stages and in a crisscross pattern

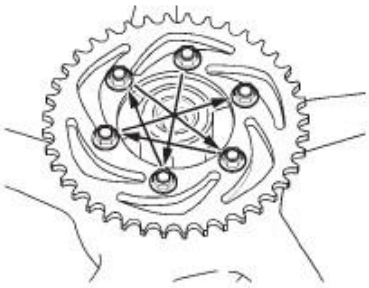

REAR WHEEL ASSEMBLY (DRUM)

1. Lubricate:
   Oil seal edges

	Recommended lubricant **Based grease lithium soap**

2. Assembly:
   Rear sprocket.
   Refer to "CHECKING AND CHANGE GEAR OF THE REAR WHEEL " on page 4-14

3. Lubricate:
   Wheel axle
   Wheel bearings

	Recommended lubricant **Based grease lithium soap**

4. Fit:
   Clearance of the drive chain
   Refer to "ADJUSTING THE CLEARANCE CHAIN OF TRANSMISSION "on page 3-16

	Chain slack transmission **30-40 mm**

5. Tighten:
   Nut wheel axle

	Nut wheel axle **90 Nm (8.0 m · kg, 58 ft · lb)**

6. Fit:
   Free pedal brake
   Refer to "Brake Adjustment DRUM "on page 3-14

	Free pedal brake **15.0-20.0 mm**

Downloaded from www.Manualslib.com manuals search engine

FRONT BRAKE

Disassembly of the front brake pads

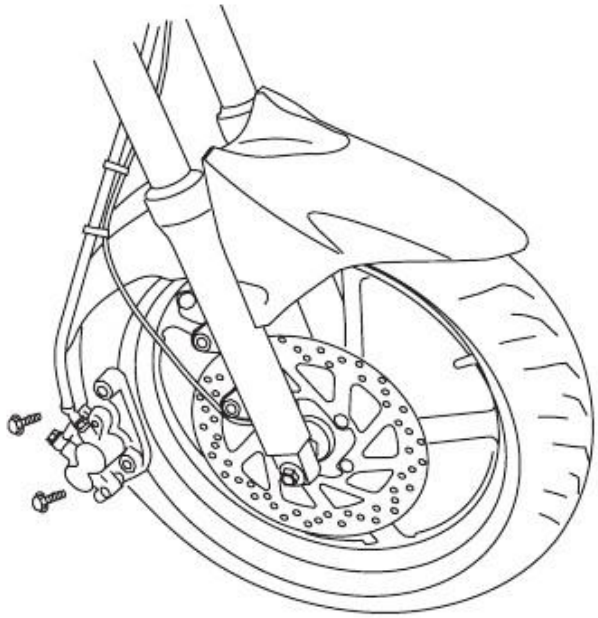

Order	Procedure / Parts to remove	Amount	Observations
1	Bra brake hose	1	
2	Screw the front brake caliper	2	
3	Front brake callipers	1	
4	Brake Pad Clip	2	
5	Pin pads	1	
6	Front brake pads	2	
7	Spring brake pads	1	
			For assembly, reverse the procedure disassembly.

Downloaded from www.Manualslib.com manuals search engine

Removing the front brake master cylinder

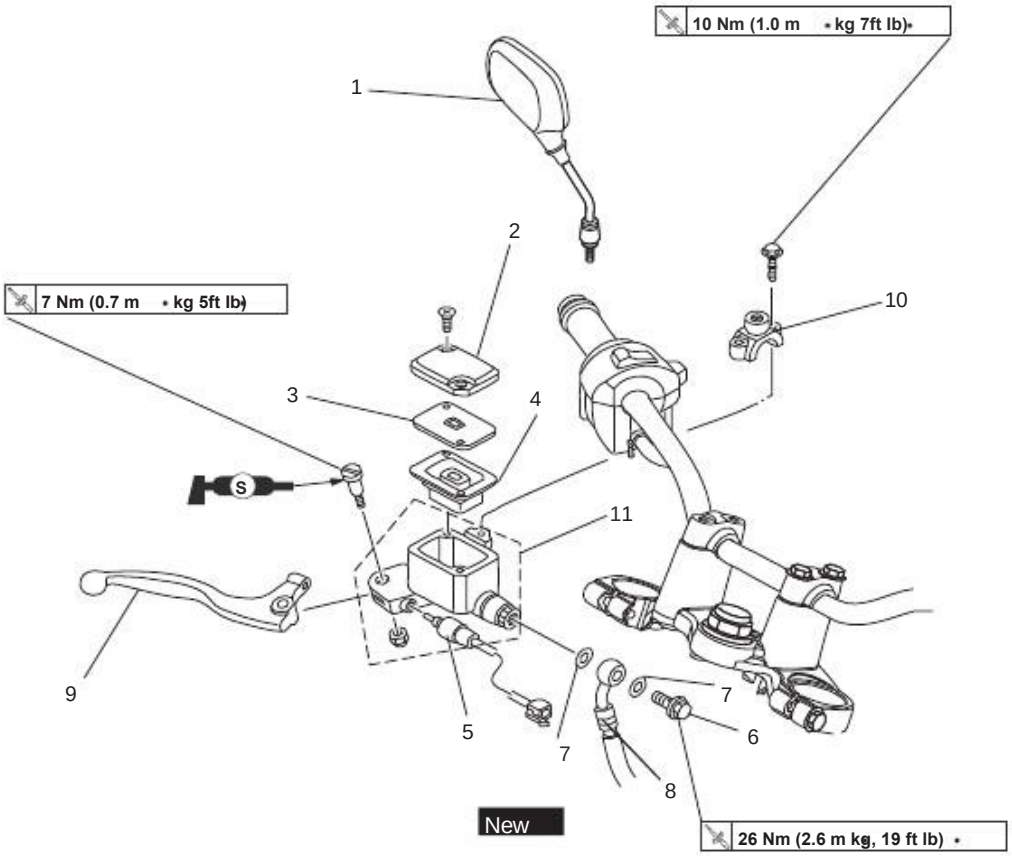

Order	Procedure / Parts to remove	Amount	Observations
	Brake fluid		Drain. Refer to "BLEEDING THE SYSTEM HYDRAULIC BRAKE "on page 3-15
1	Right mirror	1	
2	Lid of the brake master cylinder	1	
3	Diaphragm retainer cylinder reservoir Brake Master	1	
4	Diaphragm tank brake master cylinder	1	
5	Brake light switch	1	
6	Screw connection brake hose	1	
7	Copper washer	2	
8	Front brake hose	1	
9	Brake lever	1	
10	Clamp the front brake master cylinder	1	
11	Front brake master cylinder	1	
			For assembly, reverse the procedure disassembly.

Downloaded from www.Manualslib.com manuals search engine

Disassemble the front brake master cylinder

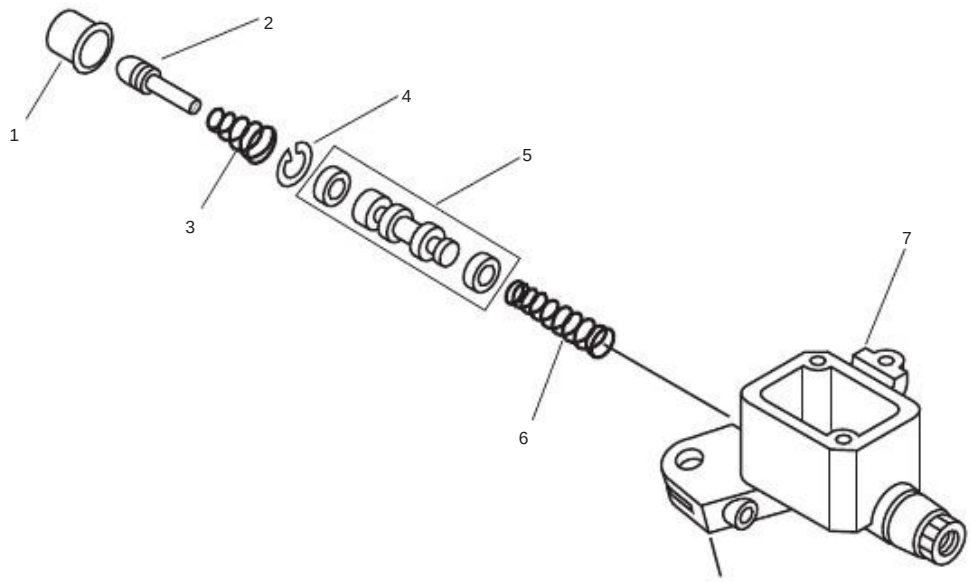

Order	Procedure / Parts to remove	Amount	Observations
1	Smock	1	
2	Pushrod	1	
3	Spring	1	
4	Pin lock	1	
5	Full Piston	1	
6	Spring	1	
7	Cylinder body	1	
			For assembly, reverse the procedure disassembly.

Downloaded from www.Manualslib.com manuals search engine

INTRODUCTION

WARNING

The disc brake components seldom require disassembly. Therefore, always follow these precautions:

Never disassemble the brake components, to unless absolutely necessary.
If you disconnect any connections in the brake hydraulic, must disarm all the brake system, drain, clean, properly fill and bleed after assembling
Never use solvents on the components Brake internal
Use only clean brake fluid or again for the cleaning of the components the brake.
Brake fluid can damage the surface painted and plastic parts. Therefore, Always wipe up the liquid spilled brake.
Keep the brake fluid in contact with eyes as it can cause serious injury. FIRST AID FOR BRAKE FLUID TO ENTERING THE EYES: Flush with water for 15 minutes and seek immediate medical attention.

CHECKING THE BRAKE DISC FRONT

1. Remove:
   Front Wheel
   Refer to "FRONT WHEEL" on page 4-6.
2. Check:
   Brake disc
   Damaged / Replace scratched.
3. Measure:
   Deformation of the brake disc
   Out of specification Correct deformation
   Brake disc or replace the brake disc.

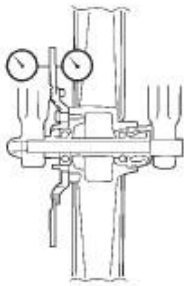

Limit disk deformation
Brake 0.10 mm

a. Place the vehicle on a suitable support, so that the front wheel is lifted.
b. Before measuring the deformation of the disc front brake, turn the handlebars to the left or right to ensure that the wheel front is fixed.
c. Remove the brake caliper.
d. Hold the comparator at right angles relative to the surface of the brake disc.
e. Measuring the deformation of the disc 5 mm below the rim of the brake disc.

4. Measure:
   Thickness of brake disc
   Measure thickness of brake disc different locations.
   Replace out of specification.

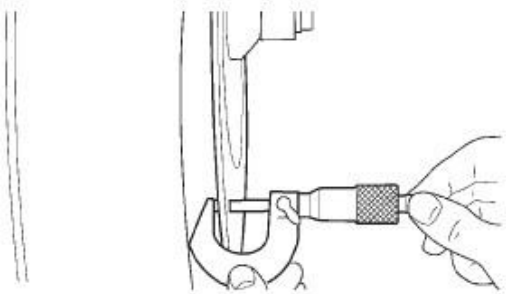

Limit the thickness of the disc brake 3.5 mm

5. Adjust
   Deformation of the brake disc

a. Disassemble the brake disk
b. Rotate the brake disc of a screw hole
c. Disc brake assembly

Screw the brake disc
30 Nm (3.0 m · kg, 22 ft · lb)
LOCTITE ®

NOTE:

Tighten the brake disc in stages and in a crisscross pattern.

Downloaded from www.Manualslib.com manuals search engine

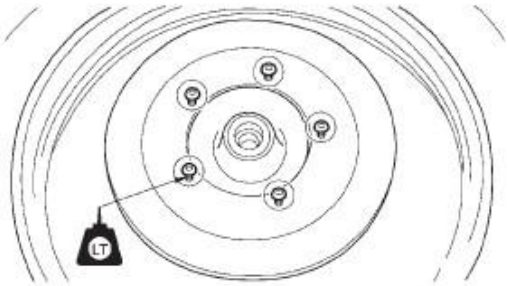

d. Measuring deformation of the brake disk
e. If out of specification, repeat the setting until the deformation of the disc brake is within the specified
f. If the deformation of the disc brake disk you can not within specification, replace the brake disc.
6. Assembly:
Front Wheel
Refer to "FRONT WHEEL" on page 4-6

CHANGING THE BRAKE FRONT

NOTE:

When replacing the brake pads is not disconnect the brake hose or disassemble the brake caliper.

1. Measure
Desgate limit of the brake pad "a"
EspecificaciónReemplace outside the set of brake pads

	Coating thickness of the brake pads (inside) **4.5 mm** **Limit 0.8 mm** **Coating thickness of the brake pads (exterior)** **4.5 mm** **Limit 0.8 mm**

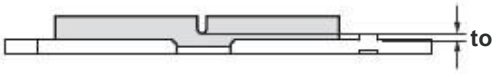

2. Assembly:
Brake pads
Spring brake pads

NOTE:

Assemble the new brake pads and spring new brake pads.

a. Securely attach a plastic hose transparent "1" bleed screw "2". Place the other end of the hose a container.

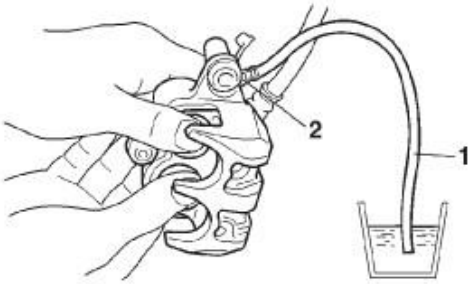

b. Loosen the bleed screw and push the piston brake caliper with your fingers

c. Tighten the bleed screw

	Bleed screw **6 Nm (0.6 m · kg, 4.3 ft · lb)**

d. Assemble the brake pads and springs new brake pads.

3. Check
Brake fluid level
Below the level mark
minimum "on" add brake fluid
recommended to the proper level.
Refer to "CHECKING BRAKE FLUID LEVEL "on page 3-14.

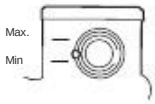

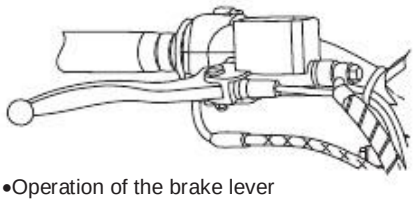

4. •Operation of the brake lever
Feeling the soft or esponjosaPurgue Brake system.
See "VENT SYSTEM HYDRAULIC BRAKE"On page 3-15.

Downloaded from www.Manualslib.com manuals search engine

REMOVING THE BRAKE CALIPER FRONT

NOTE:

Before disassembling the brake caliper, drain all the brake fluid brake system.

1. Disassembly:
   Screw connection brake hose
   Copper washers
   Brake Hose

NOTE:

Place the end of the brake hose container and pump out fluid Brake carefully.

DISASSEMBLY OF THE BRAKE CALIPER

1. Disassembly:
   Piston brake caliper "1"
   Seals piston caliper "2"
   Dust Seals Caliper "3"

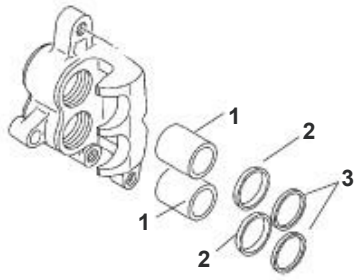

a. Apply compressed air through the opening "a" the union of the brake hose to force the output of the pistons of the brake caliper.

WARNING

Cover the piston brake caliper with a cloth.
Be careful to avoid damage when the piston is expelled from the brake caliper.
Never attempt to remove the caliper pistons pushing the brake.

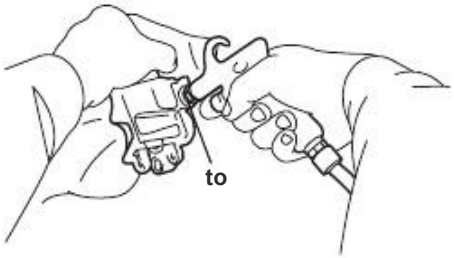

b. Disassemble the seals and dust covers the brake caliper

CHECKING THE BRAKE CALIPER

Replacement recommended plan brake components	
Brake pads	If required
Piston seals	Every two years
Dust	Every two years
Brake Hose	Every four years
Brake fluid	Every two years and always that the brake is disassembly

1. Check:
   Piston brake caliper "1"
   Roughness / scratches / wear Replace the pistons of the brake caliper.
   Cylinders of the brake caliper "2"
   Scratches / wear Replace the gripper Brake
   Body of the caliper "3"
   Cracks / damage Replace the clamp brake.
   Distribution passages brake fluid (Body of the brake caliper)
   Blow with compressed air clogged.

WARNING

Whenever the brake caliper is disassembled, replace the piston seals and dust

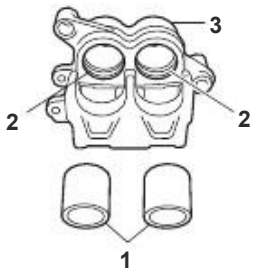

2. Check:
   Support the brake caliper
   Cracks / damage Replace.

Downloaded from www.Manualslib.com manuals search engine

ASSEMBLY OF THE BRAKE CALIPER FRONT

WARNING

Before assembly, all components internal brake should be lubricated and cleaned with a liquid cleaner or new brake.
Never use solvents on the components internal brake, as it will make the seals piston and the dust to dilate and warping.
Each time you remove the brake caliper, REPLACE ace seals the piston and dust from the brake caliper.

Recommended liquid
DOT 3 or DOT 4

ASSEMBLY OF THE FRONT BRAKE CALIPER

1. Assembly:
   Caliper
   (Temporarily)

   Copper washers
   Brake Hose
   Screw connection brake hose

Screw connection of the hose
Brake 26 Nm (2.6 m · kg, 19 ft · lb)

2. Disassembly:
   Caliper "1"

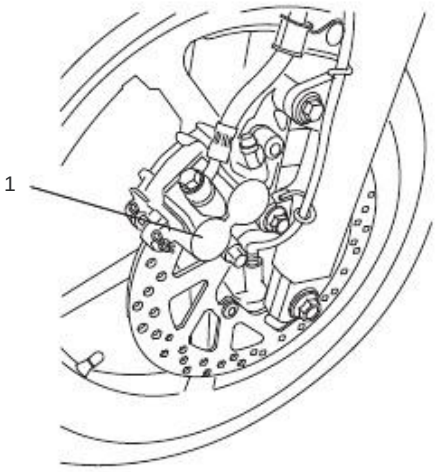

3. Assembly:
   Spring brake pads
   Brake pads
   Caliper
   Bra brake hose

Assembly:
Spring brake pads
Brake pads
Caliper
Bra brake hose

Refer to "CHANGING FRONT BRAKE PADS " on page 4-20

4. Fill:
   Deposit brake master cylinder (with the specified amount and recommended brake fluid)

Recommended Liquid
DOT 3 or DOT 4

WARNING

Use only recommended brake fluid, other fluids can cause damage brake in the rubber seals, causing leaks and loss braking efficiency.
Refill with the same type of brake fluid and is in the system, the fluid mixture can cause harmful chemical reactions that would cause an malfunction of the brakes. When fill, be careful not to get water master cylinder. Significantly decreases water boiling point fluid and may cause in vapor.

CAUTION

Brake fluid can damage the surfaces painted or plastic. Immediately clean any spilled brake fluid.

5. Purge:
   Brake system
   See "PURGING THE SYSTEM HYDRAULIC BRAKE "on page 3-15.
6. Check:
   Brake fluid level
   Below the minimum level mark "A" Add the brake fluid recommended to the proper level.
   Refer to "CHECKING THE LEVEL BRAKE FLUID "on page 3-14

Downloaded from www.Manualslib.com manuals search engine

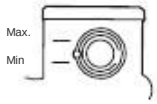

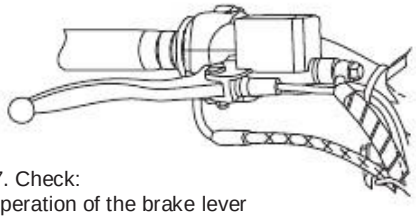

7. 7. Check:
   Operation of the brake lever
   Soft or spongy feeling Bleed
   Brake system
   See "PURGING THE SYSTEM
   HYDRAULIC BRAKE "on page 3-15.

MASTER CYLINDER DISASSEMBLY FRONT BRAKE

NOTE:

Before disassembling the master cylinder front brake, drain the brake fluid the entire brake system

1. Disconnect:
   Brake light switch front "1"

NOTE:

Press the latch to remove the light switch Front brake master cylinder brake.

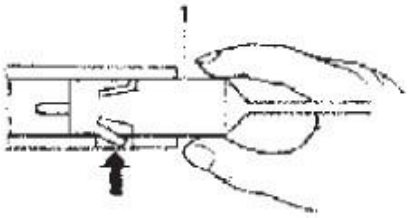

2. Remove:
   Screw connection brake hose
   Copper washers
   Brake Hose

NOTE:

To collect the remaining brake fluid, place a container under the master cylinder and end of the brake hose.

CHECK THE MASTER CYLINDER FRONT BRAKE

1. Check:
   Brake master cylinder "1"
   Damage / scratches / wear Replace.
   Liquid distribution passages brake "2"
   (Body of the brake caliper)
   Blow with compressed air clogged.

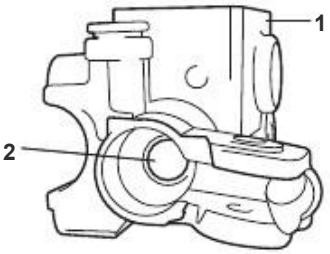

2. Check:
   Kit brake master cylinder
   Damage / scratches / wear Replace.
3. Check:
   Deposit brake master cylinder
   Damage / scratches / wear Replace.
   Diaphragm brake master cylinder
   Damage / wear Replace.
4. Check:
   Brake Hose
   Cracks / damage / wear Replace.

MASTER CYLINDER ASSEMBLY FRONT BRAKE

WARNING

Before assembly, all components internal brake must be cleaned and lubricated with a cleaner or new brake fluid. Never use solvents on the components internal brake.

Recommended Liquid
DOT 3 or DOT 4

MASTER CYLINDER ASSEMBLY FRONT BRAKE

1. Assembly:
   Brake master cylinder "1"
   Clamp the brake master cylinder "2"

Screw clamp
Brake master cylinder
10 Nm (1.0 m · kg, 7 ft · lb)

Downloaded from www.Manualslib.com manuals search engine

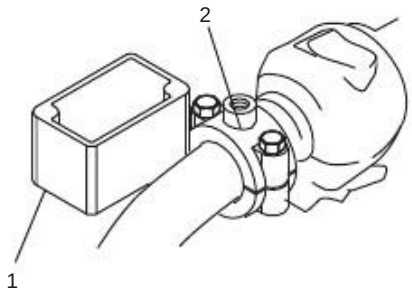

2. Ensemble:
   Copper washers "1"
   Brake hose "2"
   Screw attachment of the brake hose "3"

	Screw connection of the hose brake 26 Nm (2.6 m · kg, 19 ft · lb)

WARNING

A correct guidance is essential for safe vehicle operation

NOTE:

Brake hose assembly to the front the master cylinder at the angle shown in Figure
While holding the brake hose, tighten the connecting screw of the brake hose as shown.
Turn the handlebar to the left and right to ensure that the brake hose does not touch other parts (eg, harness of cables, wires, drivers). Corrected if necessary.

3. Fill:
   Deposit brake master cylinder (with the specified amount and recommended brake fluid)

	Liquid preferred DOT 3 or DOT 4

WARNING

Use solame efore the brake fluid recommended, some brake fluid may cause damage to rubber seals, causing leaks and loss of efficiency elfrenado.
Refill with the same type of brake fluid that is already in the system, the mixture fluids can cause a chemical reaction operation that would cause harmful Brake incorrect
When complete, use caution to no water in the master cylinder.
The water significantly decreases the point boiling of the fluid and may cause in vapor.

CAUTION

Brake fluid can damage the surfaces painted or plastic. Immediately clean any spilled brake fluid.

4. Purge:
   Brake system
   See "PURGING SYSTEM HYDRAULIC BRAKE "on page 3-15.
5. Check:
   Brake fluid level
   Below the minimum level mark "to" Add recommended brake fluid to the proper level.
   Refer to "CHECKING THE LEVEL BRAKE FLUID "on page 3-14

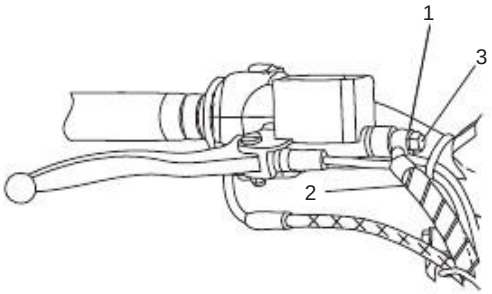

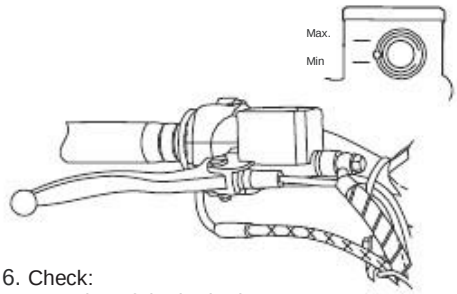

6. Check:
   Operation of the brake lever
   Soft or spongy feeling Bleed
   Brake system

Downloaded from www.Manualslib.com manuals search engine

See "PURGING SYSTEM
HYDRAULIC BRAKE "on page 3-15.

Downloaded from www.Manualslib.com manuals search engine

REAR BRAKE

Disassembly of the bands Brake

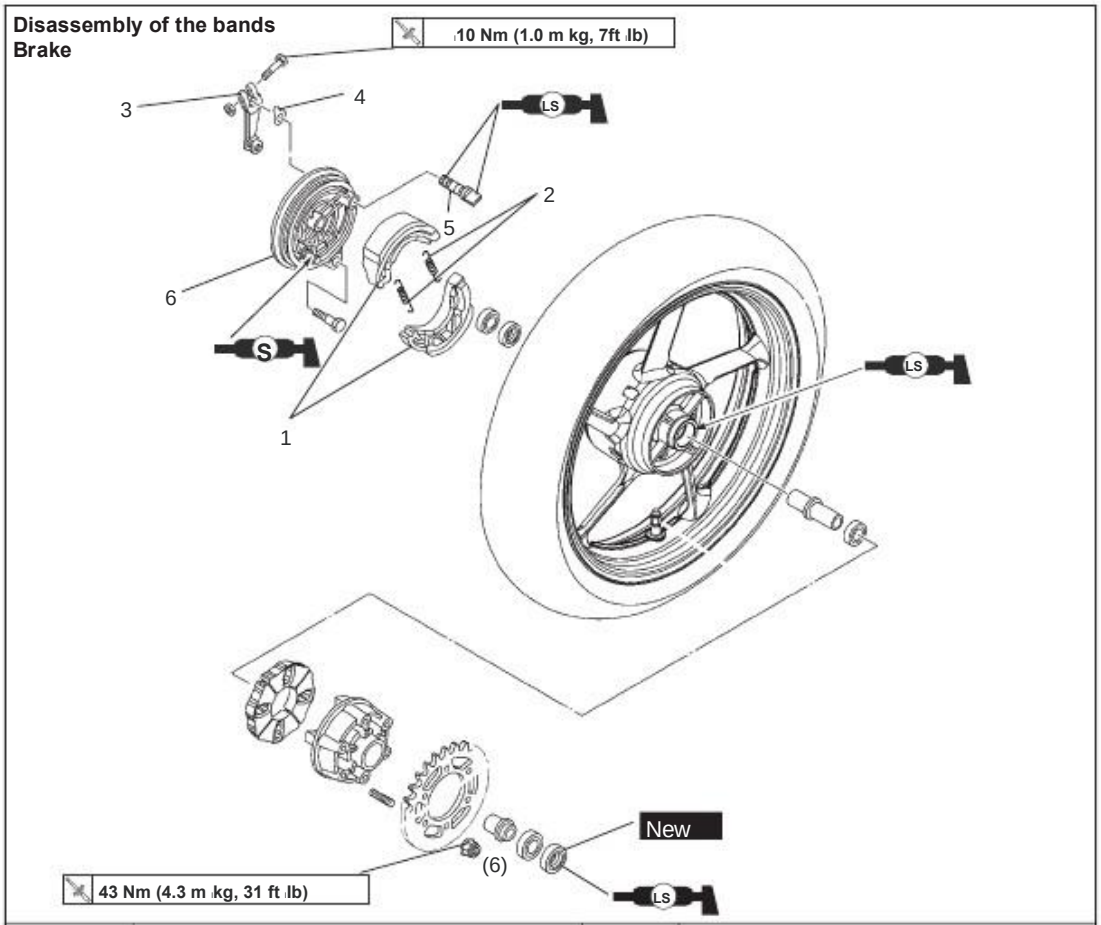

Order	Procedure / Parts to remove	Amount	Observations
	Porta full bands		Refer to "REAR WHEEL" on page 4-12
1	Brake bands	2	
2	Spring full bands	2	
3	Lever brake camshaft	1	
4	Wear indicator brake bands	1	
5	Brake camshaft	1	
6	Plate holder strips	1	
			For assembly, reverse the procedure disassembly.

Downloaded from www.Manualslib.com manuals search engine

REAR BRAKE

1. Check:
   - Covering the brake shoe
     Repair crystallized areas.
     Sand the crystallized areas with sandpaper thick.

NOTE:

After sanding the surface crystallized clean brake bands with a cloth.

2. Measure:
   - Coating thickness of the bands
     brake "to" Out of specification Replace.

Coating thickness **4.0 mm (0.16 in)** **Limit** **2.0 mm (0.08 in)**

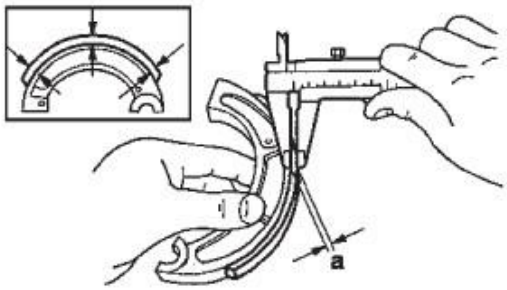

WARNING

Do not allow oil or grease gets on contact with the brake bands.

NOTE:

Replacing all the brake bands, if any of them reaches the wear limit.

3. Measure:
   Inner diameter of the brake drum "a"•
   Replace out of specification
   wheel.

Inner diameter of the drum **brake 130.0 mm** **Limit** **131.0 mm**

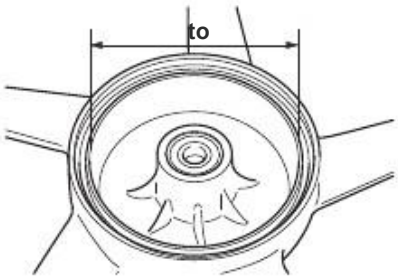

4. Check:
   - inside surface of the brake drum
     Clean oil tanks
     Remove the oil with a rag soaked in lacquer thinner or solvent.
     Repair scratches.
     Lightly and evenly polish the scratches with emery cloth.
5. Check:
   Brake camshaft
   Damage / wear Replace.

HOLDER ASSY BANDS
REAR BRAKE

1. Assembly:
   - Tree Brake cam "1"
   - Indicator wear of the brake band "2"
   - Lever the brake camshaft "3"

Screw shaft lever **Brake cam** **10 Nm (1.0 m.kg, 7.2 ft.lb)**

a. Assemble the brake camshaft so that its punch mark "a" remains as shown.

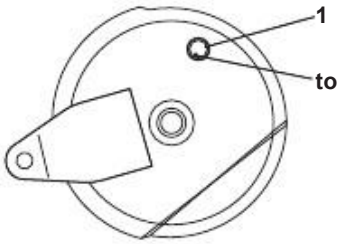

b. Aligning the projection "b" indicator wear of the brake shoe with slot the brake camshaft.

Downloaded from www.Manualslib.com manuals search engine

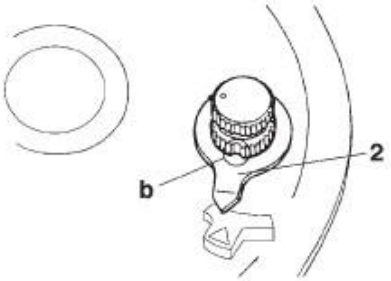

c. Align the slot "c" in the handle of the tree brake cam with the slot in the tree brake cam.

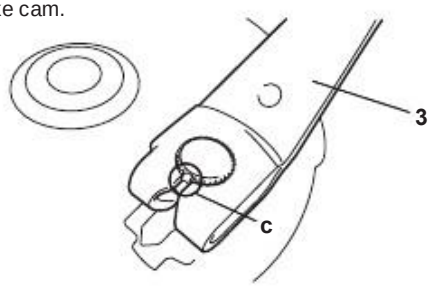

d. Verify that the bands are correctly positioned.

2. Assembly:

•Spring brake bands "1"
•Brake bands

NOTE:

•Lubricate the pivot with a thin layer of fat silicone.
•Do not damage the springs during assembly.
•Install the spring brake bands as shown.

WARNING

Do not apply grease to the lining of the brake bands.

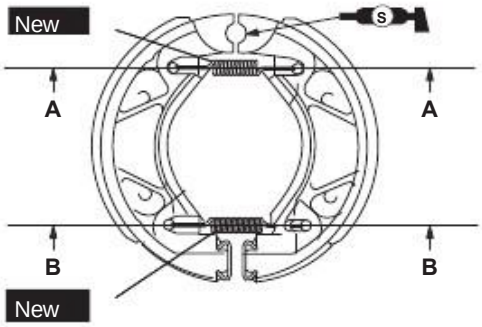

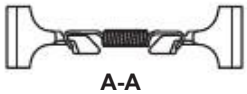

TESTING THE LIMITS OF WEAR DRUM BRAKE WHEEL REAR

NOTE:

After joining new brake bands, the inner diameter of the brake drum can check is within the wear limit "a" through the wear indicator on the slide brake bands.

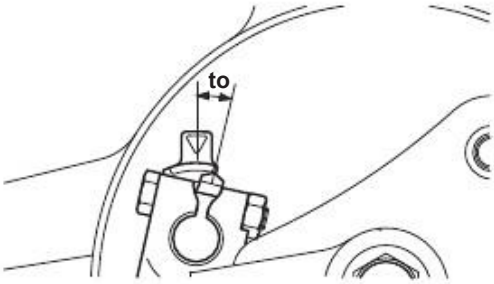

1. Check:
•Position where the lever must be installed the brake camshaft the brake camshaft
•Reinstall the cam lever brake, if the installed position is outside specification.
2. Check:
•Free pedal brake If the free play is out of specification. See "Brake Adjustment REAR DRUM "on page 3-14.

Downloaded from www.Manualslib.com manuals search engine

3. While pressing the brake pedal to
down to the end, push the lever
brake camshaft completely
the direction of the arrow and check
the wear indicator strips
does not reach the brake wear indicator
of the brake drum.
Not enough can still be used.
Reach Replace the wheel.

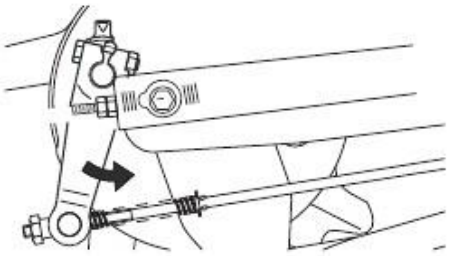

Downloaded from www.Manualslib.com manuals search engine

HANDLE

Removing the handle

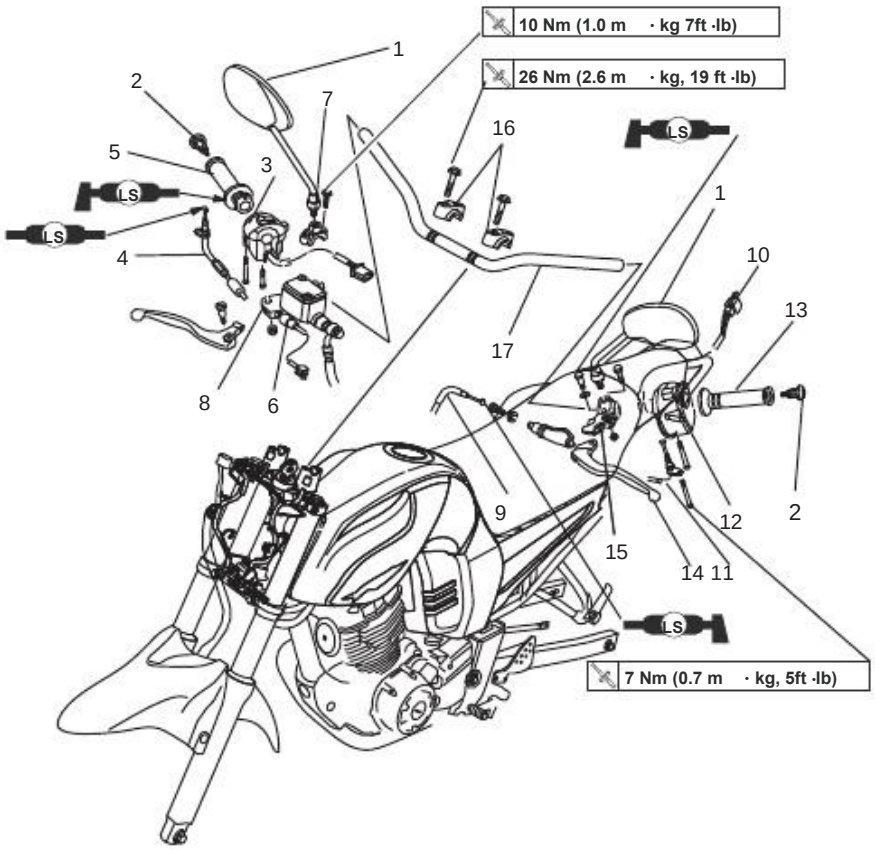

Order	Procedure / Parts to remove	Amount	Observations
1	Rearview mirror	2	
2	Plug the handlebar	2	
3	Right handlebar switch	1	
4	Throttle cable	1	
5	Throttle grip	1	
6	Switch front brake light	1	
7	Clamp the front brake master cylinder	1	
8	Front brake master cylinder	1	
9	Clutch cable	1	
10	Coupling clutch switch	1	Disconnect
11	Starter cable	1	
12	Left handlebar switch	1	
13	Handlebar grip	1	
14	Clutch lever	1	

Downloaded from www.Manualslib.com manuals search engine

Removing the handle

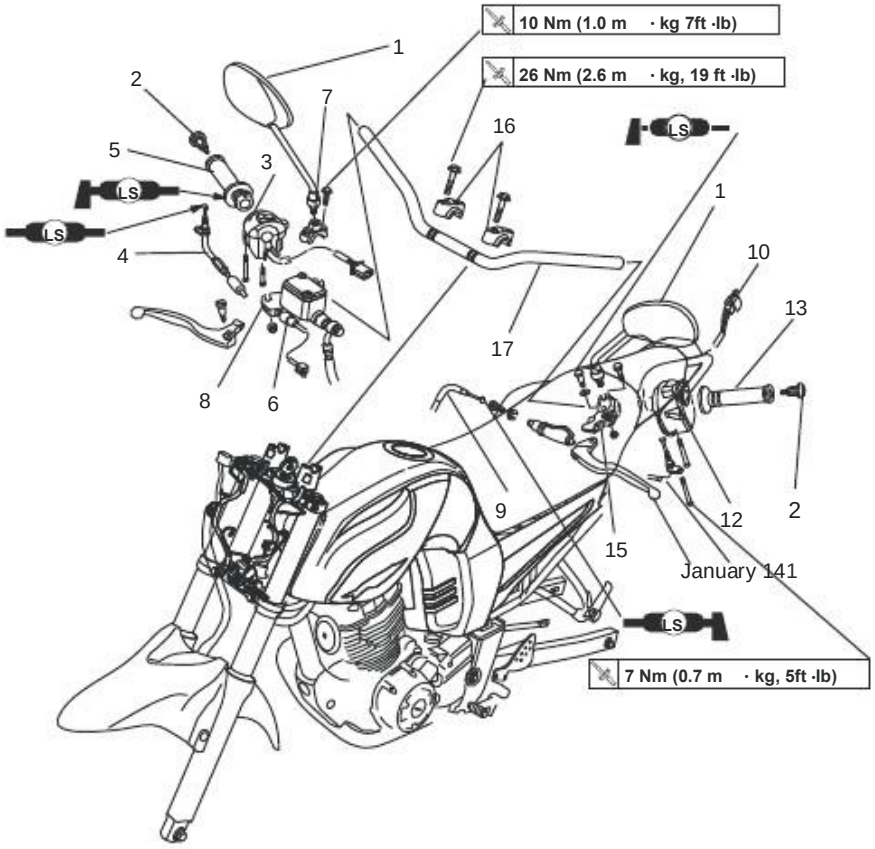

Order	Procedure / Parts to remove	Amount	Observations
15	Support of the clutch	1	
16	Handlebar top clamp	2	
17	Handlebar	1	
			For assembly, reverse the procedure disassembly.

Downloaded from www.Manualslib.com manuals search engine

REMOVING THE HANDLEBAR
1. I placed the vehicle on a flat surface

WARNING

Support the vehicle safely to avoid there is a risk of falling.

2. Remove:
•Brake light switch front "1"

NOTE:

Press the latch to remove the light switch front brake master cylinder brake.

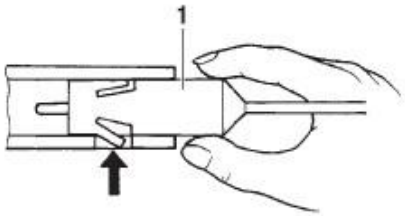

3. Remove:
•Handlebar grip "1"

NOTE:

Blow compressed air between the left handlebar and the handlebar grip, and gradually push the handle out.

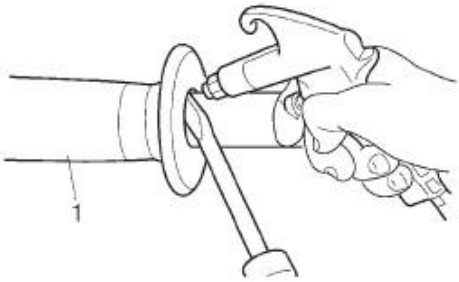

CHECK THE HANDLE
1. Check:
•Handlebar
Curves / cracks / damage Replace.

WARNING

Do not attempt to straighten bent handlebars and that dangerously weakened.

HANDLEBAR ASSEMBLY
1. I placed the vehicle on a flat surface

WARNING

Support the vehicle with safety to there is no risk of falling.

2. Ensemble: I
•Handlebar "1"
•Handlebar top clamp "2"

Upper clamp screw
Handlebar
26 Nm (2.6 m kg, 19 ft lb)

CAUTION

First, tighten the screws on the front of the handlebar clamp, and then the rear.
Turn the handlebars to the left and right. If no contact fuel tank to adjust the position of the handlebar.

NOTE:

Align the marks "a" of the handlebar with the upper surface of the clamp bracket the handlebar.

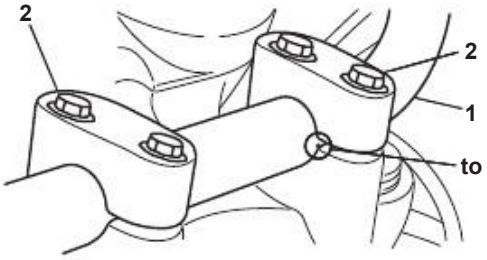

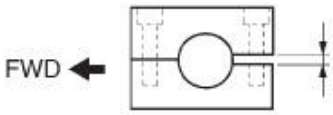

3. Assembly:
•Support the clutch lever "1"

NOTE:

Align the slot in the lever bracket clutch to match the mark "a" on the handlebars.

Downloaded from www.Manualslib.com manuals search engine

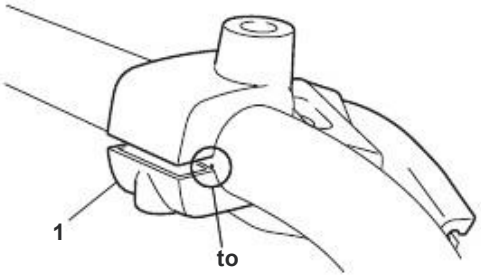

4. Assembly:
•Brake light switch front "1"

NOTE:

Align the projection "a" in the handlebar switch left with the hole "b" on the handlebars.

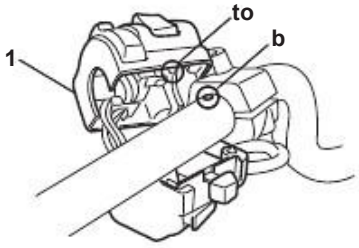

5. Assembly:
•Left handlebar "1"
•Handlebar cap "1"

a. Apply a thin layer of rubber adhesive at the left end of the handlebar.
b. Slide the handlebar grip in the left end of the handlebar.
c. Wipe off any excess rubber adhesive with a clean cloth.

WARNING

Do not touch the handlebar grip until rubber adhesive has dried completely.

NOTE:

Should be less than 3 mm of clearance "a" between the grip of the handlebar and the end Handlebar

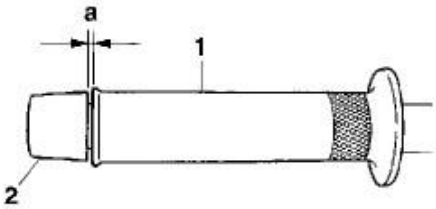

6. Assembly:
•Clutch cable

NOTE:

Lubricate the clutch cable end with a thin layer of grease lithium soap base.

7. Assembly:
•Brake master cylinder
•Clamp the brake master cylinder
See the "BRAKE FRONT "on page 4-23.
8. Assembly:
• l Throttle grip "1"
•The throttle cable "2"
•The right handlebar switch "3"
•Plug the handlebar

NOTE:

•Lubricate the throttle cable end and Inside the throttle grip with a thin layer of soap-based grease lithium and then install the handlebar grip.

•Guide the throttle cable through the slot on the right handlebar switch, then install the cable.
•Align the projection of "a" in the switch right handlebar with the hole "b" in the handlebar.
•Must be of 1-3 mm of clearance "c" between the handlebar handle and the end of handlebar

Downloaded from www.Manualslib.com manuals search engine

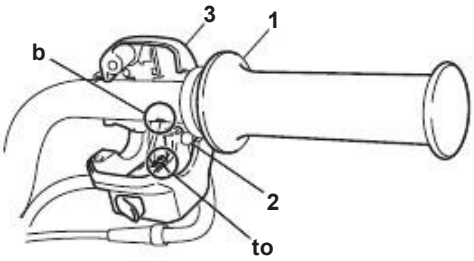

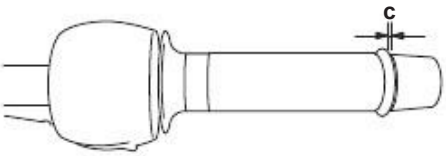

9. Fit:
•Free play of clutch cable
See "SETTING THE GAME CLUTCH CABLE FREE "on page 3-10.

	Free play of the lever clutch 10.0-15.0 mm

10. Fit:
•Set throttle cable free
See "SETTING THE GAME THROTTLE CABLE FREE "in page 3-6.

	Cable free play accelerator 3.0-5.0 mm

Downloaded from www.Manualslib.com manuals search engine

FRONT FORK

Removing the fork legs lead

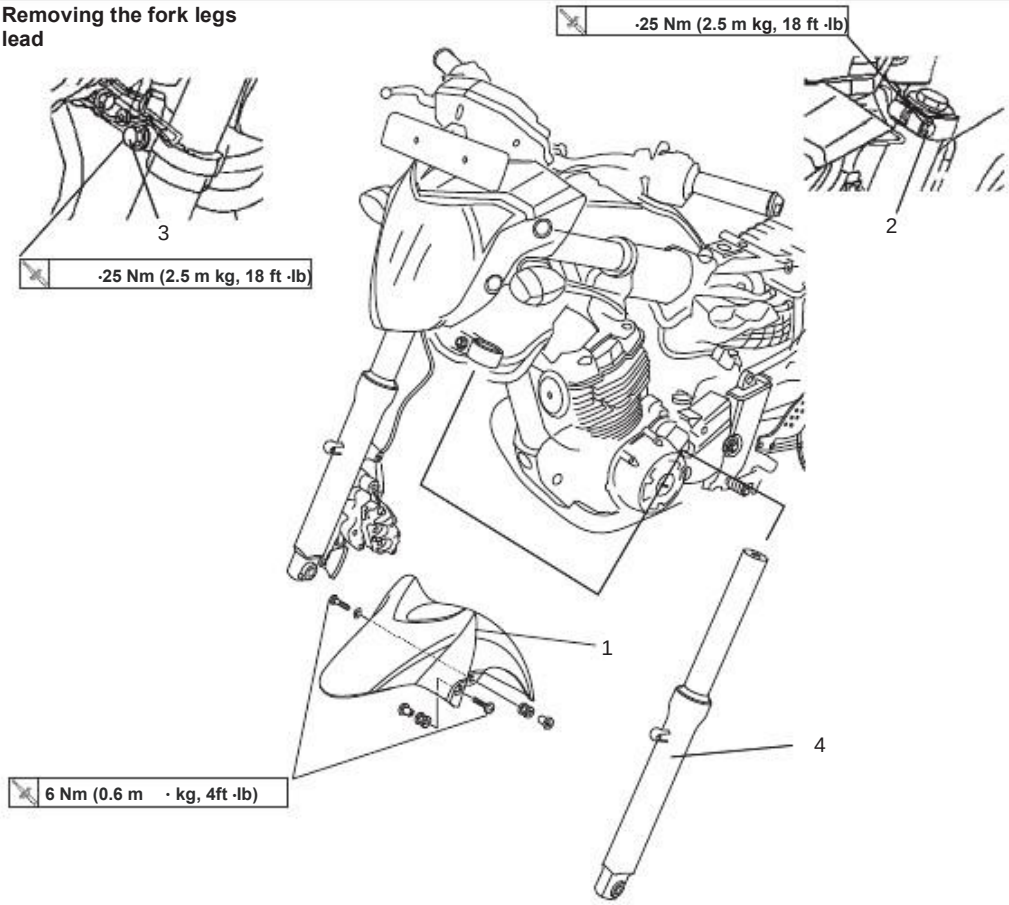

Order	Procedure / Parts to remove	Amount	Observations
			The following procedure applies to both front fork legs
	Front Wheel		Refer to "REAR WHEEL" in page 4-6
1	Front fender	1	
2	Screw top bracket	1	Loosen
3	Screw bottom bracket	1	Loosen
4	Front fork bars	1	
			For assembly, reverse the procedure disassembly.

Downloaded from www.Manualslib.com manuals search engine

Disassembly of the front fork legs

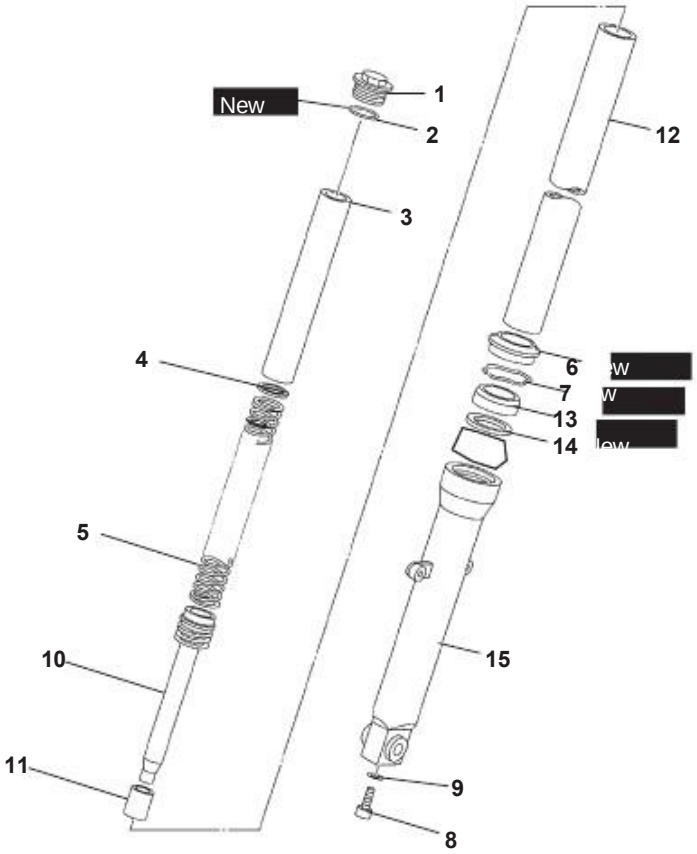

Order	Procedure / Parts to remove	Amount	Observations
			The following procedure applies to both front fork legs
1	Screw cap	1	
2	O-ring	1	
3	Spacer	1	
4	Washer	1	
5	The fork spring	1	
6	Smock	1	
7	Oil Seal Clip	1	
8	Screw the damper rod	1	
9	Copper washer	1	
10	Damper rod	1	
11	Oil flow obturator	1	
12	Tube	1	
13	Oil Seal	1	
14	Oil Seal Washer	1	

Downloaded from www.Manualslib.com manuals search engine

Disassembly of the front fork legs

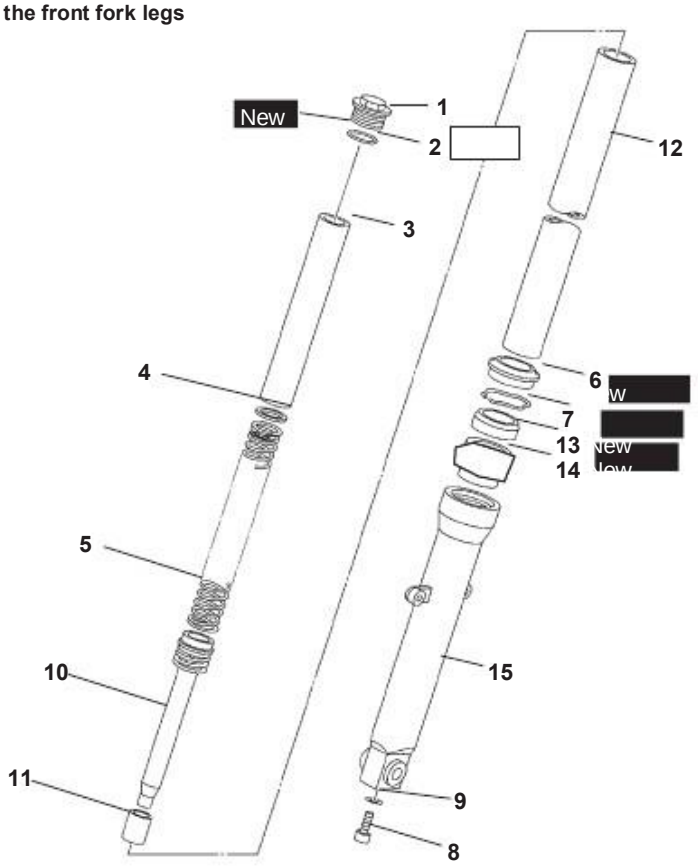

Order	Procedure / Parts to remove	Amount	Observations
15	Outer tube	1	
			For assembly, reverse the procedure disassembly.

Downloaded from www.Manualslib.com manuals search engine

REMOVING THE BARS
FRONT FORK
The following procedure applies to both
Front fork bars
1. I placed the vehicle on a flat surface

WARNING

Support the vehicle with safety to there is no risk of falling.

2. Loosen:
•Screw top bracket "1"
•Screw bottom bracket "2"

WARNING

Before loosening the mounting screws upper and lower rods hold the front fork.

NOTE:
To facilitate removal of stop screws, first loosen the screw on top, then loosen the cap slightly without loosening the bottom bracket screw while the fork front is installed in the vehicle.

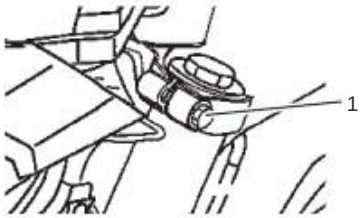

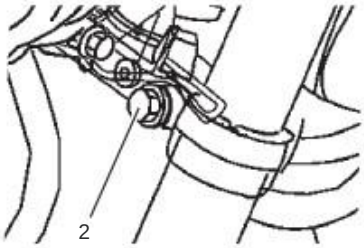

3. Remove:
•Front fork bars

DISASSEMBLY OF THE BARS
FRONT FORK
The following procedure applies to both
Front fork bars
1. Remove:
•Rubber cover
•Clip "1"
•Cover front fork "2"
(With O-ring)
•Spring fork.

2. Drain:
•Fork oil

NOTE:
Operate the outer tube several times while leaving the fork oil

3. Remove:
•Dust "1"
•Oil seal clip "2"
(With a flathead screwdriver)

CAUTION

Do not scratch the inner tube.

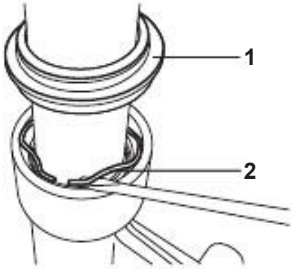

4. Remove:
•Screw rod of the damper "1"
•Damper rod

Downloaded from www.Manualslib.com manuals search engine

NOTE:
While holding the damper rod with the holder of the damper rod "2" and T key in "3", loosen the screw rod shock.

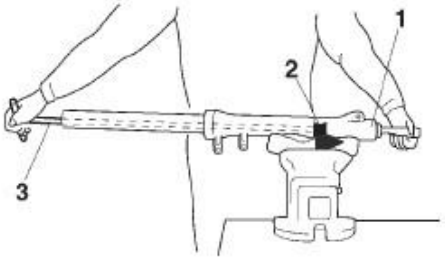

Key in T
YSST-813

VERIFICATION OF BARS
FRONT FORK

The following procedure applies to both Front fork bars

1. Check:
 •Tube
 •Outer tube
  Curves / damage / scratches Replace.

WARNING

Do not attempt to straighten a bent inner tube as dangerously weaken

2. Measure:
 •Spring free length "a"
  Replace out of specification.

Free length of spring
254.4 mm

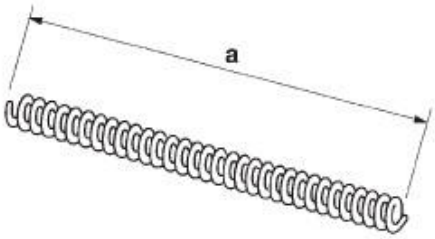

3. Check:
 •Damper rod
  Damage / wear Replace.
  Blow with compressed air blocked all oil passage
 •Plug flow of oil
  Replace damaged.

CAUTION

When disassembling and assembling the bars front fork, not perrmita that foreign materials from entering the fork front.

ASSEMBLY OF THE BARS
FRONT FORK

The following procedure applies to both Front fork bars

WARNING

Make sure the oil levels in both front fork legs are equal Different levels of oil, can be in little loss of maneuverability and stability.

NOTE:

•During assembly of the fork legs front, be sure to substitute the following parts:
 - Hub of the outer tube
 - Oil Seal
 - Dust
 - Clip
•Before assembling the fork legs front, make sure that all components are clean.

1. Assemble:
 •Damper rod

CAUTION

Allow the damper rod slide down slowly in the tube inside until it protrudes from the bottom of the inner tube. Take care not to damage the inner tube.

2. Lubricate:
 •Outer surface of the inner tube

Downloaded from www.Manualslib.com manuals search engine

	Recommended Oil **Oil suspension** **10W or equivalent**

3. Press:
•Screw rod of the damper "1"

	Screw rod buffer **28 Nm (2.8 m · kg, 20 ft · lb)**

NOTE:

While holding the damper rod with the holder of the damper rod "2" and T key "3", tighten the screw rod buffer

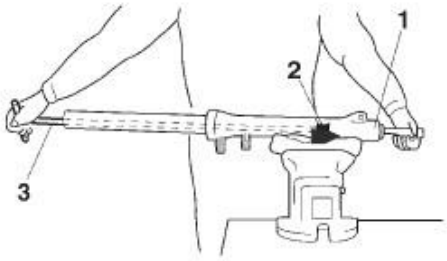

4. Assembly:
• Bushing outer tube "1"
• Washer "2"
(With the Seal assembly tool of Front fork oil)

	Seal assembly tool of the front fork oil **YSST-875**

5. Assembly:
• Oil Seal "1"
Assembly tool oil seal Front fork "2"

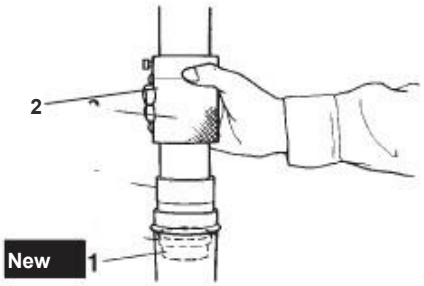

	Seal assembly tool of the front fork oil **YSST-875**

CAUTION

Be sure to join the oil seal with the number upwards.

NOTE:

•Before installing the oil seal, lubricate edges based grease lithium soap.
•Lubricate the outer surface of inner tube oil suspension.
•Before installing the oil seal, cover the top of the front fork leg with a plastic bag to protect the oil seal during assembly.

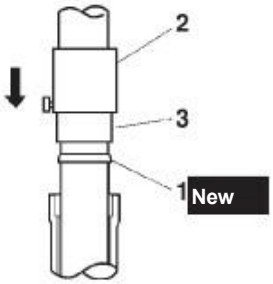

6. Assembly:
• Oil Seal Clip "1"

NOTE:

Adjust the oil seal clip so that it fits in the inner groove of the outer tube.

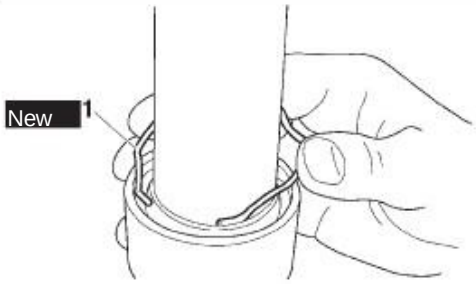

Downloaded from www.Manualslib.com manuals search engine

7. Assembly:
• Dust "1" [redacted]
(With the Seal assembly tool of
Front fork oil "2")

Seal assembly tool
of the front fork oil
YSST-875

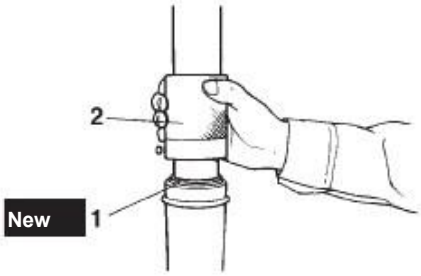

8. Filling:
• Sweep the front fork
(With the specified amount of oil
recommended)

Recommended Oil
Oil 10W or suspension
equivalent
Number 459 cm3

CAUTION

•Be sure to use oil suspension recommended. Other oils may have an adverse effect on the performance of the front fork.
•When disassembling and assembling the bars front fork, not perrmita that foreign materials from entering the fork front.

9. After filling the fork leg
front, slowly pull the inner tube
"1" from top to bottom (at least ten times)
to distribute the oil suspension.

NOTE:

Sure to operate the inner tube slowly
because the oil can flow suspension.

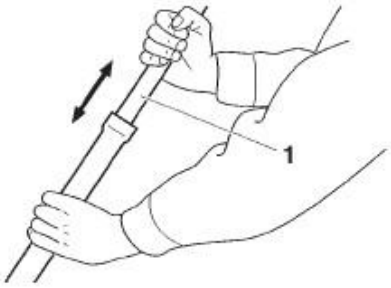

10.Antes measure the level of fork oil,
wait ten minutes until the oil has
settled and the air bubbles has dispersed.

NOTE:

Be sure to purge the fork leg
front of any residual air.

11. Measure:
•Oil level of the fork leg
front "a" (from the top of the tube
inside, with the inner tube fully
compressed without fork spring)
Correct out of specification.

Level
87.0 mm

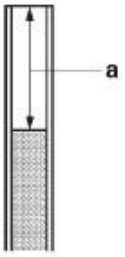

12. Assembly:
• Rfork esorte "1"

NOTE:

Install the spring with the end of smaller height
"A" down

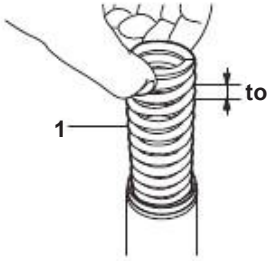

Downloaded from www.Manualslib.com manuals search engine

13. Assembly:
- O-ring W
  (In the screw cap of the front fork)
- Screw the top of the front fork
- Clip

BLACK:

•Before installing the screw cap of the fork front, lubricate the O-ring grease.
•Before installing the screw cap of the fork front, lubricate the O-ring grease.

ASSEMBLY OF THE BARS FRONT FORK

The following procedure applies to both Front fork bars

1. Assembly:
•Delanter fork legs
Temporarily tighten the screws upper and lower supports

2. Press:
•Screw top bracket "1"

	Screw the top bracket 25 Nm (2.5 m · kg, 18 ft · lb)

•Screw bottom bracket "2"

	Screw bottom bracket 25 Nm (2.5 m · kg, 18 ft · lb)

NOTE:

•To give the proper torque to the screws top, first place, tighten the screw on bottom, then tighten the cap before tighten the screw on top.

WARNING

Make sure the brake hose, cable clutch, and the cables are guided correctly.

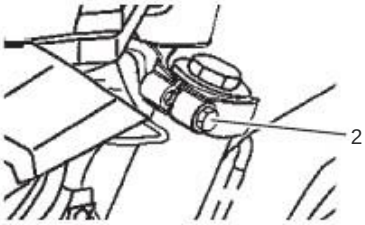

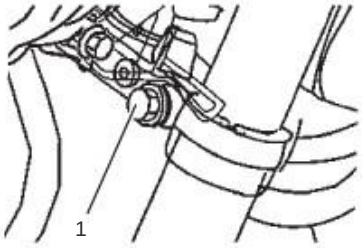

Downloaded from www.Manualslib.com manuals search engine

STEERING

Disassembly of the steering column

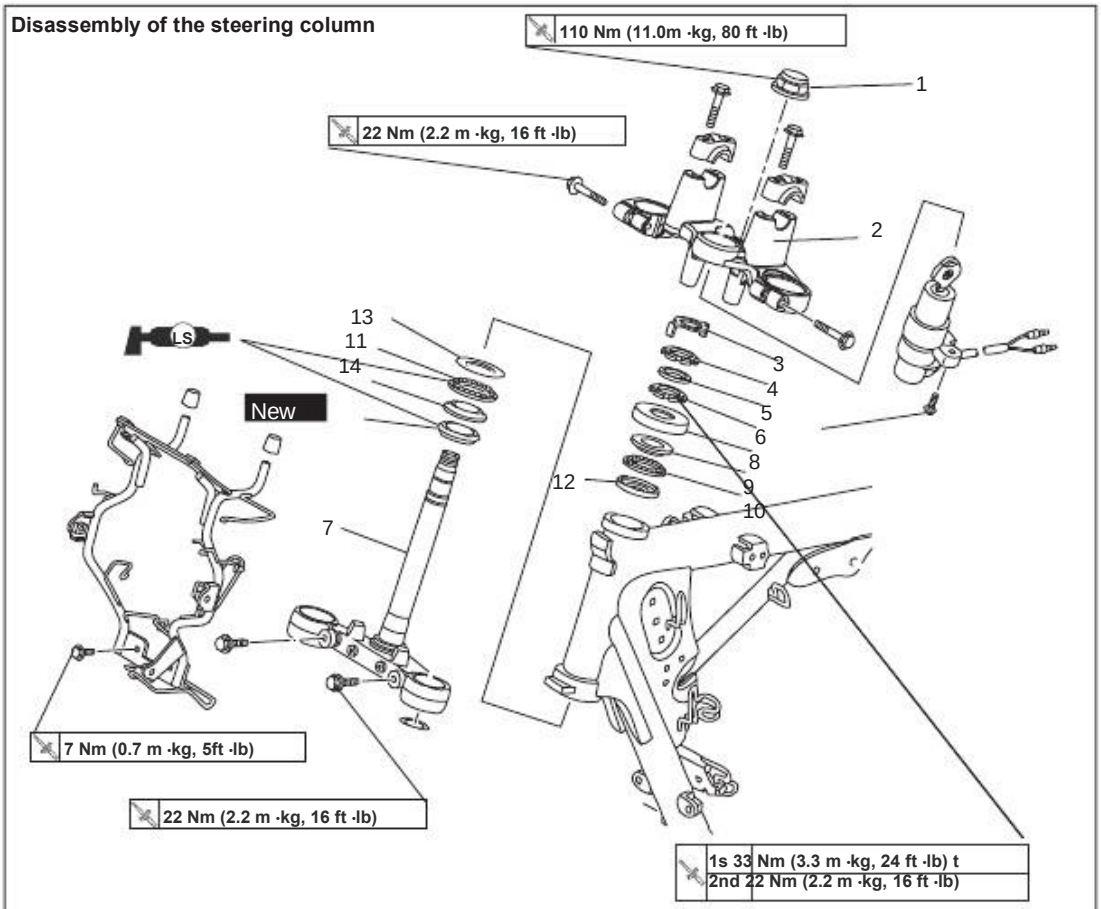

Order	Procedure / Parts to remove	Amount	Observations
	Full Streetlight		Refer to section "GENERAL CHASSIS" on page 4-1
	Front fork bars		Refer to "FRONT FORK" on page 4-40
1	Screw of the steering column	1	
2	Upper Bracket	1	
3	Lockwasher	1	
4	Upper ring nut	1	
5	Rubber washer	1	
6	Lower ring nut	1	
7	Bottom Bracket	1	
8	Bearing cover	1	
9	Upper bearing inner race	1	
10	Upper bearing	1	
11	Lower bearing	1	
12	Upper bearing outer race	1	

Downloaded from www.Manualslib.com manuals search engine

Disassembly of the steering column

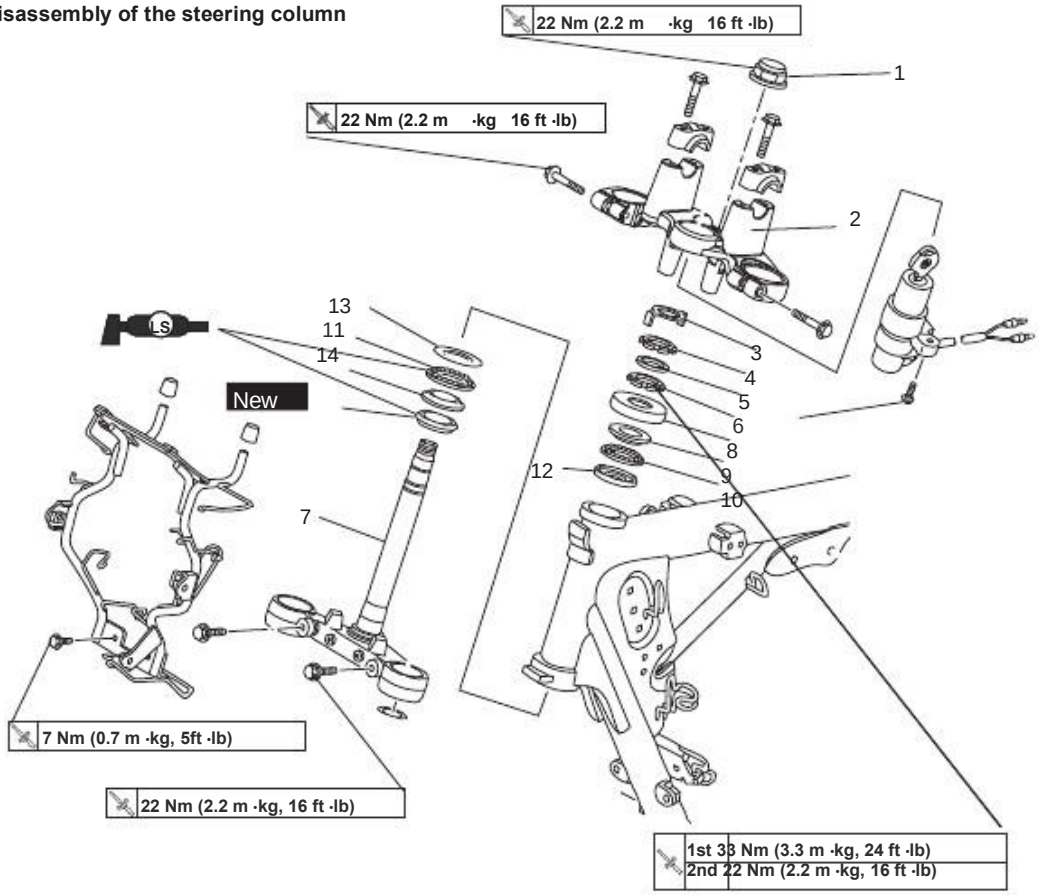

Order	Procedure / Parts to remove	Amount	Observations
13	Lower bearing outer race	1	
14	Lower bearing inner race	1	
15	Smock	1	
			For assembly, reverse the procedure disassembly.

Downloaded from www.Manualslib.com manuals search engine

DISASSEMBLY OF LOWER BRACKET

1. I placed the vehicle on a flat surface

WARNING

Support the vehicle with safety to there is no risk of falling.

2. Disassembly:
- Upper ring nut
- Rubber washer
- Lower ring nut "1"
- Bottom bracket "2"

NOTE:

Disassemble the lower ring nut with the wrench direction to the nut "2".

	Nut wrench direction YSST-721

WARNING

Secure the bottom bracket securely so there is no risk of falling.

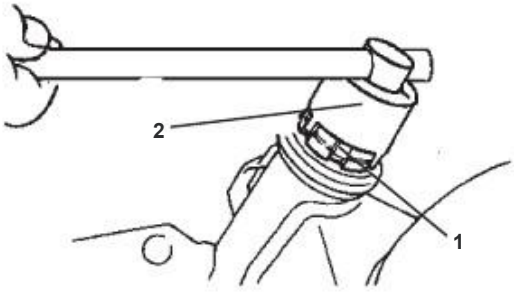

CHECKING THE COLUMN ADDRESS

1. Wash:
•Bearings
•Bearing races

	Solvent for cleaning recommended Kerosene

2. Check:
•Bearings
•Bearing races
Damage / pitting Replace.
3. Replace:
•Bearings
•Bearing races

a. Remove the bearing races of the tube of the steering column with a rod long "1" and the hammer.
b. Remove the lower bearing support chisel "2" and the hammer.
c. Install the bearing races and a new overall.

CAUTION

If the bearing races are not installed correctly, it could damage the tube of the steering column.

NOTE:

•Always replace bearings and tracks Bearing as a whole.
•Each time you remove the column 1dirección, replace the dust.

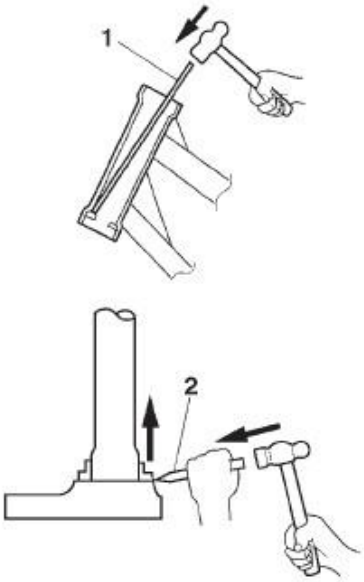

4. Check:
•Upper Bracket
•Bottom Bracket
(Together with the stem of the address)
Curves / cracks / damage Replace.

FITTING THE STEERING COLUMN

1. Lubricate:
•Upper bearing
•Lower bearing
•Bearing races

	Recommended lubricant Based grease lithium soap

2. Assemble:
•Lower ring nut
•rubber washer

Downloaded from www.Manualslib.com manuals search engine

• Upper ring nut
•Lockwasher
Refer to "CHECKING AND ADJUSTING THE STEERING COLUMN " on page 3-18

3. Assemble:
•Upper Bracket
•Nut of the steering column

4. Assemble:
•Front fork bars
See section "FORK FRONT "on page 4-35

NOTE:

Temporarily tighten the mounting bolts top and bottom.

5. Press:
•Nut of the steering column

	Nut of the steering column **110 Nm (11.0 m · kg, 80 ft · lb)**

Downloaded from www.Manualslib.com manuals search engine

REAR SHOCK

Removing the rear shock

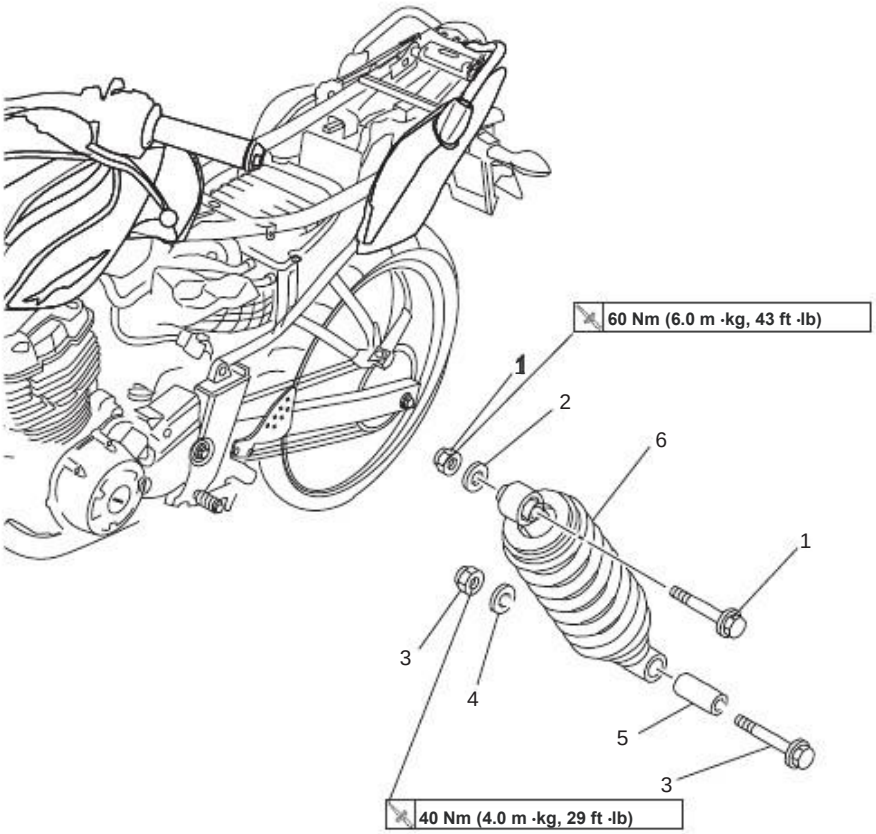

Order	Procedure / Parts to remove	Amount	Observations
	Seat, side covers 1 & 2, mud guard		Refer to "GENERAL CHASSIS" on page 4-1
1	Nut / bolt rear upper shock	1/1	
2	Washer	1	
3	Nut / bolt Rear shock absorber lower	1/1	
4	Washer	1	
5	Spacer	1	
6	Rear Shock	1	
			For assembly, reverse the procedure disassembly.

Downloaded from www.Manualslib.com manuals search engine

REMOVING THE SHOCK REAR

1. I placed the vehicle on a flat surface

WARNING

Support the vehicle with safety to there is no risk of falling.

NOTE:

Place the vehicle on a suitable support so that the rear wheel is elevated.

VERIFICATION OF SHOCK REAR

1. Check:
- •Rear shock rod.
  Deformation / damage Replace rear shock.
- •Rear shock.
  Replace oil leaks rear shock.
- •Spring
  Damage / wear Replace the rear shock.
- •Hubs
  Damage / wear Replace the rear shock.
- •Screws
  Curves / damage / wear Replace.

REAR SHOCK MOUNTING

1. Assembly:
- •Rear Shock

2. Press:
- •Rear shock absorber top nut

Upper shock nut back
40 Nm (4.0 m · kg, 29 ft · lb)

- •Rear shock absorber lower nut

Lower shock nut back
60 Nm (6.0 m · kg, 43 ft · lb)

3. Fit:
- • Rear shock absorber. (See "ADJUSTING THE REAR SHOCK" on page 3-21)

Downloaded from www.Manualslib.com manuals search engine

SWING

Removing the rocker

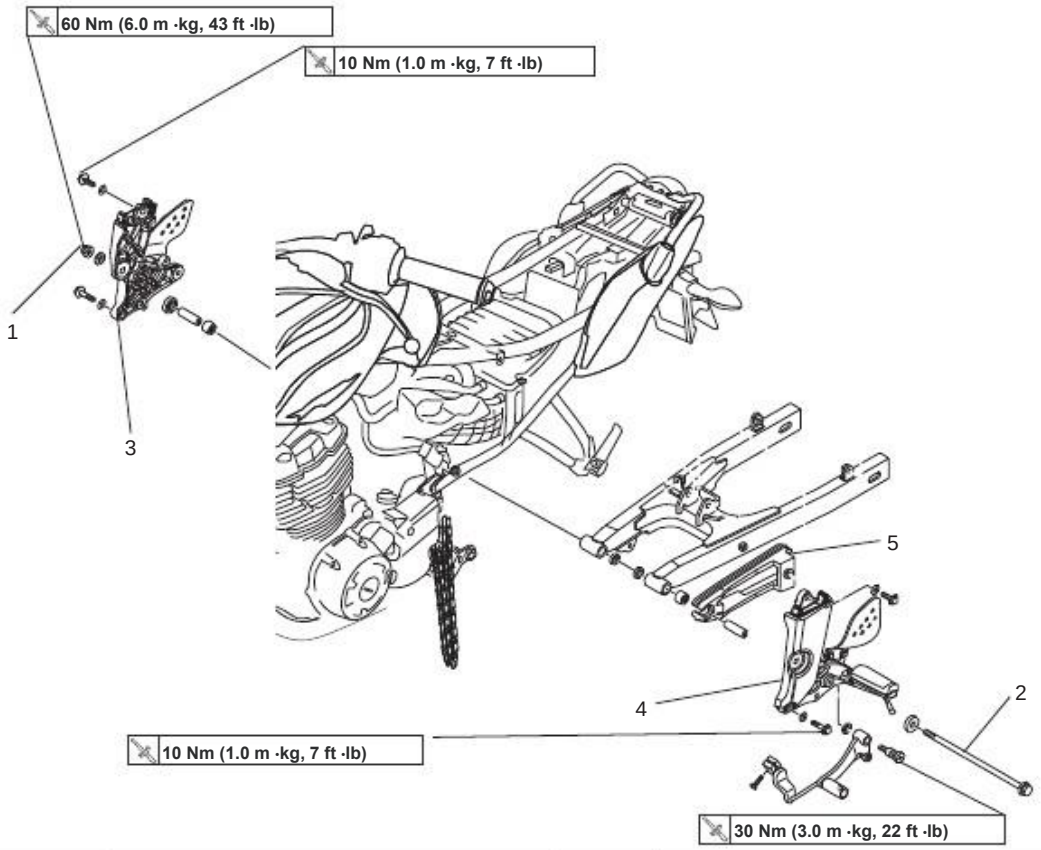

Order	Procedure / Parts to remove	Amount	Observations
	Rear Wheel		
	Rear Shock		See "SHOCK BACK "on page 5-1
	Rear fender		Refer to "REAR WHEEL" in page 4-12
1	Pivot axle nut	1	
2	Pivot axis	1	
3	Support of the right footrest	1	
4	Left footrest support	1	
5	Seal of the guard	1	
6	Tilt	1	
7	Oil Seal	2	
8	Dust Cover	2	
9	Bushing	2	
10	Bearing	2	
			For assembly, reverse the procedure disassembly.

Downloaded from www.Manualslib.com manuals search engine

Removing the rocker

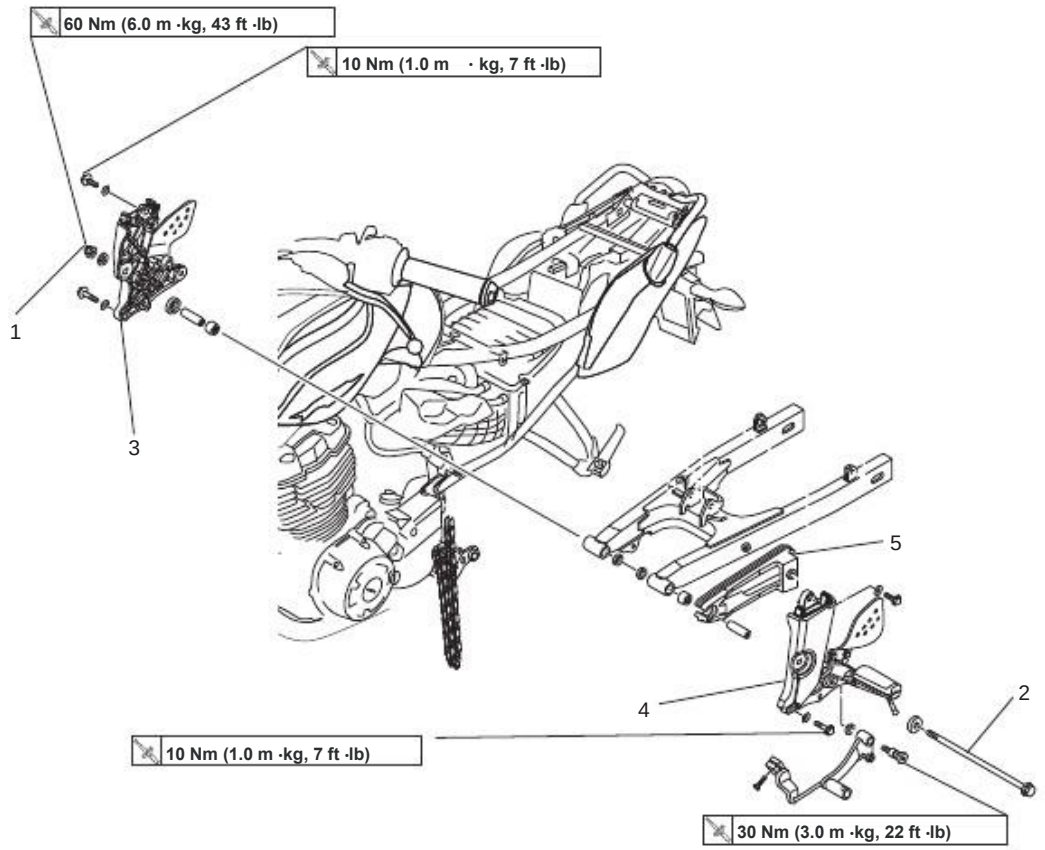

Order	Procedure / Parts to remove	Amount	Observations
11	Bearing	2	
			For assembly, reverse the procedure disassembly.

Downloaded from www.Manualslib.com manuals search engine

REMOVING THE ROCKER

1. I placed the vehicle on a flat surface

WARNING

Support the vehicle with safety to there is no risk of falling.

NOTE:

Support the vehicle safely to avoid there is a risk of falling.

2. Measure:
 •Swingarm side play.

a. Measure torque the axle nut pivot.

	Pivot axle nut **60 Nm (6.0 m · kg, 43 ft · lb)**

b. Measure the rocker side "a" moving the swing from side to side.
c. If you look at the swingarm side play, check the spacers, bearings, and overall.

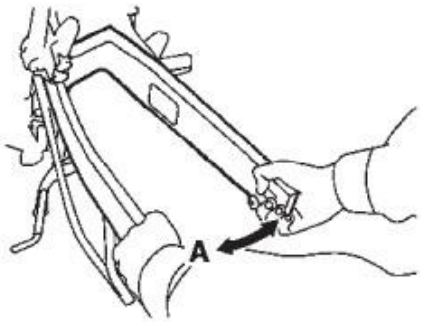

VERIFICATION OF OVERHEAD

1. Check:
 •Tilt
 Curves / damage / wear Replace.
2. Check:
 •Pivot axis
 Rotating the pivot shaft in a flat surface.
 Replace curves.

WARNING

Do not attempt to straighten the axis of the pivot.

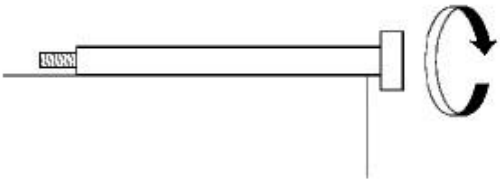

3. Wash:
 - Pivot axis
 - Dust
 - Spacers
 - Bearings

	Solvent for cleaning **recommended** **Kerosene**

4. Check:
 - Dust
 - Spacers
 - Oil Seals
 Damage / wear Replace.
 •Bearings
 Damage / pitting Replace

TILT ASSEMBLY

1. Lubricate:
 •Bearings
 •Spacers
 •Dust
 •Pivot axis

	Recommended lubricant **Based grease lithium soap**

2. Assemble:
 •Bearings "1"

	Mounting depth "a" **0.5-1.5 mm**

Downloaded from www.Manualslib.com manuals search engine

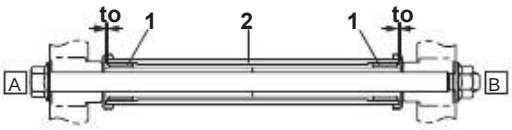

2. Tilt
A. Left
B. Right side

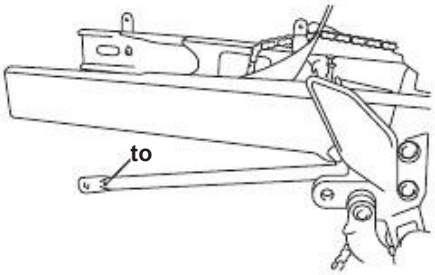

4. Assembly:
- Rear Shock
- Tension bar
- Rear Wheel

Refer to "SHOCK BACK "on page 4-47 and" WHEEL BACK "on page 4-12.

5. Fit:
- backlash of the drive chain

See section "CLEARANCE CHAIN "on page 3-16.

	Chain slack transmission: 30-40 mm

Downloaded from www.Manualslib.com manuals search engine

CHAIN

Removing the transmission chain

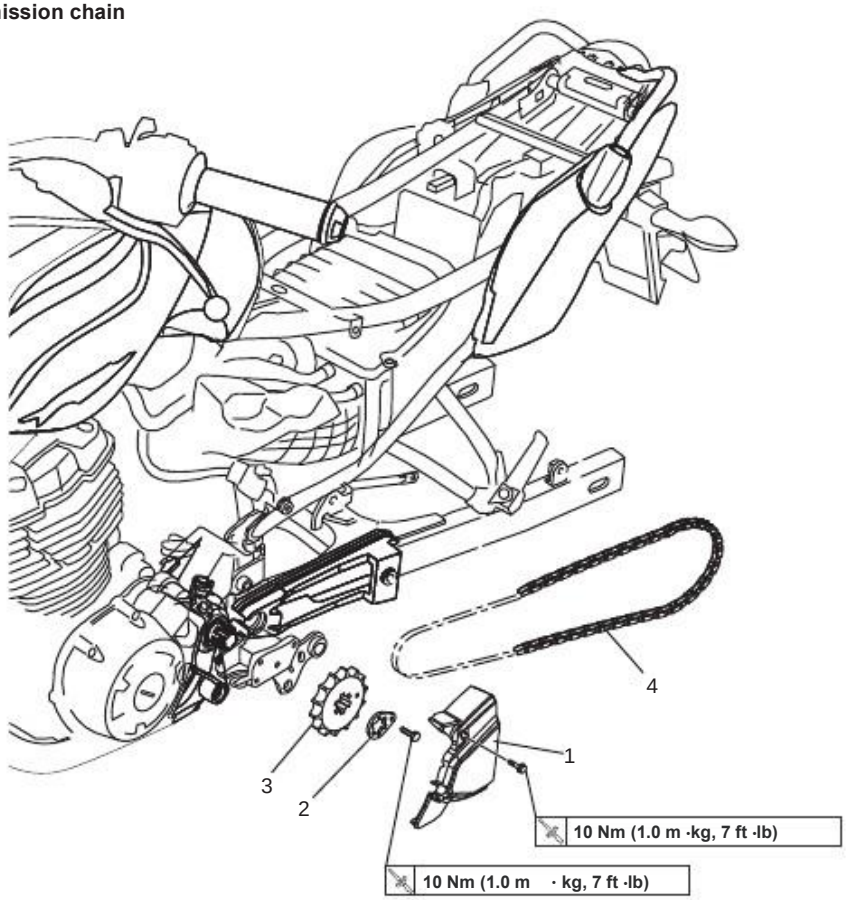

Order	Procedure / Parts to remove	Amount	Observations
	Rear Wheel		Refer to "REAR WHEEL" on page 4-12
	Footrest bracket right bracket left footrest		See "TILT" on page 4-49
	Rear fender		
1	Chain cover	1	
2	Retaining the drive sprocket	1	
3	Gear	1	
4	Transmission chain	1	
			For assembly, reverse the procedure disassembly.

Downloaded from www.Manualslib.com manuals search engine

CHAIN CHECK
TRANSMISSION

1. Measure:
•15 links the drive chain
Replace out of specification chain.

	Length limit of 15 links **191.5 mm**

a. Measure the length "a" between the inner faces of the rollers and the length "b" between faces outside of the rollers in a section 15 links of the chain of transmission as is illustrated.

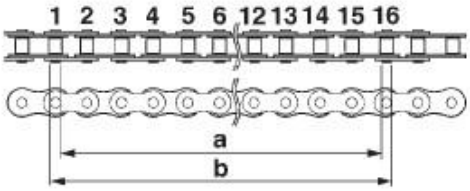

b. Calculate the length "c" of section 15 links of the drive chain using the following formula "c" = (length "A" between the inner faces of the rollers + Length "b" between the outer faces of the rolls) / 2

NOTE:

•When measuring the segment links 15 the chain of transmission, make sure the This transmission chain taut.
•Perform the measurement in two or three points different each time

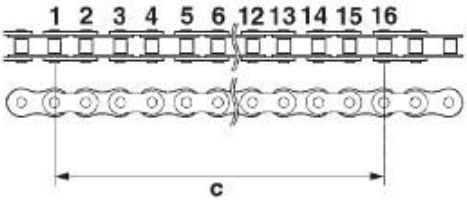

2. Check:
•Drive chain
Stiffness Limpiar and lubricate or replace.

3. Clean:
•Drive chain
a. Clean the chain with a cloth clean.
b. Spray the cleaning chemical chain transmission chain and thoroughly cleaned.

	Chain cleaner recommended for chains with O-ring

4. Check:
• roller chain transmission "1"
Damage / wear Replace chain transmission.
• Side plates of the chain of transmission "2"
Damage / wear Replace chain transmission.
Cracks Replace the drive chain.

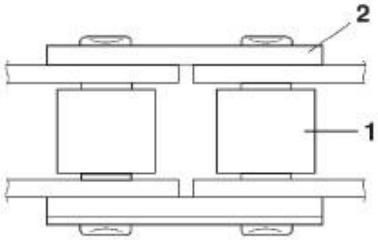

5. Lubricate:
•Drive chain

	Recommended lubricant **Proper chain lubricant** **for chains with O-ring**

• Wipe off excess lubricant.

Downloaded from www.Manualslib.com manuals search engine

6. Check:
•Gear
Refer to "REAR WHEEL" in page 4-12

ASSEMBLY OF THE CHAIN

1. Lubricate:
•Drive chain

	Recommended lubricant **Proper chain lubricant** **for chains with O-ring**

2. Assemble:
•Drive chain
•Drive sprocket
•Retaining the drive sprocket

	Screw retention of the wheel sprocket **10 Nm (1.0 m · kg, 7.2 ft · lb)**

3. Assemble:
• Tilt
See "TILT" on page 4-49
• Rear wheel
Refer to "REAR WHEEL" in page 4-12

4. Fit:
•Clearance of the drive chain
See "CLEARANCE CHAIN "on page 3-16

	Chain slack transmission **30-40 mm**

CAUTION

A chain tensioned excessively overloaded engine and other vital parts and chain You can get loose and damage the swingarm or cause an accident. Therefore, keep the tension of the chain of transmission within specification limits.

Downloaded from www.Manualslib.com manuals search engine

ENGINE

REASSEMBLY 5-1
MOTOR ASSEMBLY 5-4
CHANGES ARM ASSEMBLY 5-4

HEAD 5-5
REMOVING THE HEAD 5-7
INSPECTION OF THE HEAD 5-7
INSPECTION OF DISTRIBUTION AND PINION
GUIDE TO THE SUPPLY CHAIN
INSPECTION OF TENSION DISTRIBUTION CHAIN 5-8
DECOMPRESSION SYSTEM INSPECTION 5-8
HEAD ASSEMBLY 5-9
..... 5-9

CAMSHAFT 5-12
REMOVING THE ROCKER ARMS AND CAMSHAFT 5-13
CAMSHAFT INSPECTION 5-13
ROCKER AND INSPECTION OF THE ROCKER SHAFT 5-13
ASSEMBLING THE ROCKER ARMS AND CAMSHAFT 5-14

VALVES AND VALVE SPRINGS 5-15
REMOVING THE VALVES 5-16
CHECKING THE VALVES AND VALVE GU IAS 5-16
CHECKING THE VALVE SEATS 5-17
CHECKING THE VALVE SPRINGS 5-18
VALVE ASSEMBLY 5-19

CYLINDER AND PISTON 5-21
REMOVING THE PISTON 5-22
INSPECTION OF CYLINDER AND PISTON D 5-22
CHECKING THE PISTON RINGS 5-23
PISTON WRIST PIN INSPECTION 5-24
ASSEMBLY PISTON AND CYLINDER 5-24

STARTING AND MAGNETO GEAR 5-26
MAGNET REMOVAL 5-28
ARR GEAR REMOVAL ANQUE 5-28
STARTING GEAR INSPECTION 5-28
STARTING GEAR ASSEMBLY 5-29
MOUNT MAGNET 5-29

ELECTRIC START 5-31
REMOVING THE ELECTRIC START 5-33
CHECKING THE ELECTRIC STARTER 5-33
STARTER ASSEMBLY 5-34

Downloaded from www.Manualslib.com manuals search engine

CLUTCH 5-35
REMOVING THE CLUTCH 5-38
INSPECTION OF RECORDS OF FRICTION 5-38
CHECKING THE CLUTCH PLATES 5-38
CHECKING THE CLUTCH SPRINGS 5-39
INSPECTION Cutterbar 5-39
CHECKING THE PRESSURE PLATE 5-39
CHECKING THE CLUTCH LEVER PUSH 5-39
SHORT AND PUSH ROD 5-39
PRIMARY DRIVE GEAR INSPECTION 5-40
PRIMARY DRIVEN GEAR INSPECTION 5-40
CLUTCH INSPECTION 5-40

OIL PUMP 5-43
CHECKING THE OIL PUMP 5-45
ASSEMBLING THE OIL PUMP 5-45
ASSEMBLING THE OIL PUMP 5-46

SHIFT SHAFT 5-47
CHECKING THE SHIFT SHAFT 5-48
INSPECTION OF THE LEVER POSITION 5-48
INSTALLING THE SHIFT SHAFT 5-48

PINION BALANCER 5-49
PRIMARY DRIVE GEAR REMOVAL AND SPROCKETS THE BALANCER 5-51
PRIMARY DRIVE GEAR INSPECTION AND SPROCKETS THE BALANCER 5-51
ASSEMBLY OF THE BALANCER DRIVEN GEAR 5-51
PRIMARY DRIVE GEAR REMOVAL AND SPROCKETS THE BALANCER 5-51

ENCLOSURE 5-53
SEPARATION OF COVERS 5-56
INSPECTION COVERS 5-56
INSPECTION AND CHAIN GUIDE TO THE SUPPLY CHAIN 5-56
CHECKING THE OIL STRAINER 5-56
INSPECTION OF BEARINGS AND OIL SEALS 5-56
INSPECTION BEARING RETAINER 5-57
ASSEMBLY OF COVERS 5-57

Downloaded from www.Manualslib.com manuals search engine

CRANKSHAFT 5-58
REMOVING THE CRANKSHAFT 5-59
CRANKSHAFT INSPECTION 5-59
CRANKSHAFT ASSEMBLY 5-59

TRANSMISSION 5-61
CHECKING THE SHIFT FORKS 5-64
CHECKING THE SHIFT DRUM 5-64
INSPECTION OF TRANSMISSION 5-64
FITTING THE PUSH RODS 5-65
MAIN SHAFT ASSEMBLY AND DRIVE AXLE 5-65
ASSEMBLY OF FORKS AND CHANGE DRUM 5-65

Downloaded from www.Manualslib.com manuals search engine

REASSEMBLY

Removing the silencer

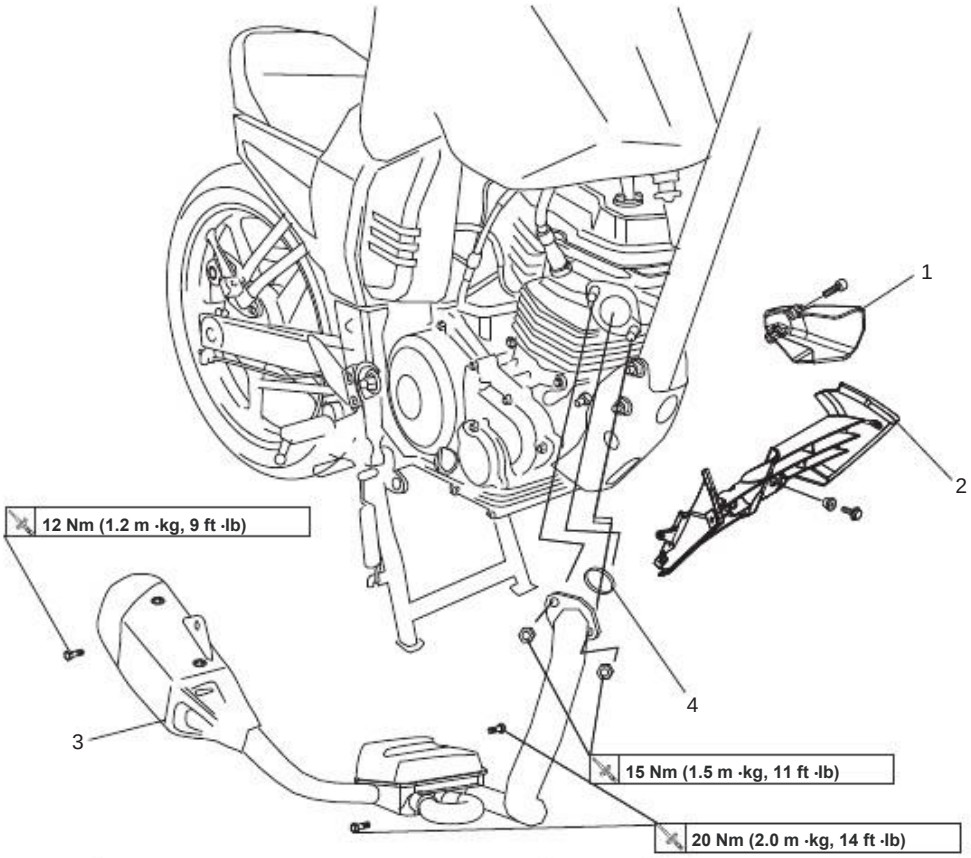

Order	Procedure / Parts to remove	Amount	Observations
1	Air Duct	2	
2	Air guide	1	
3	Silencer	1	
4	Gasket, exhaust pipe	1	
			For assembly, reverse the procedure disassembly.

Downloaded from www.Manualslib.com manuals search engine

Disconnect cables and connectors

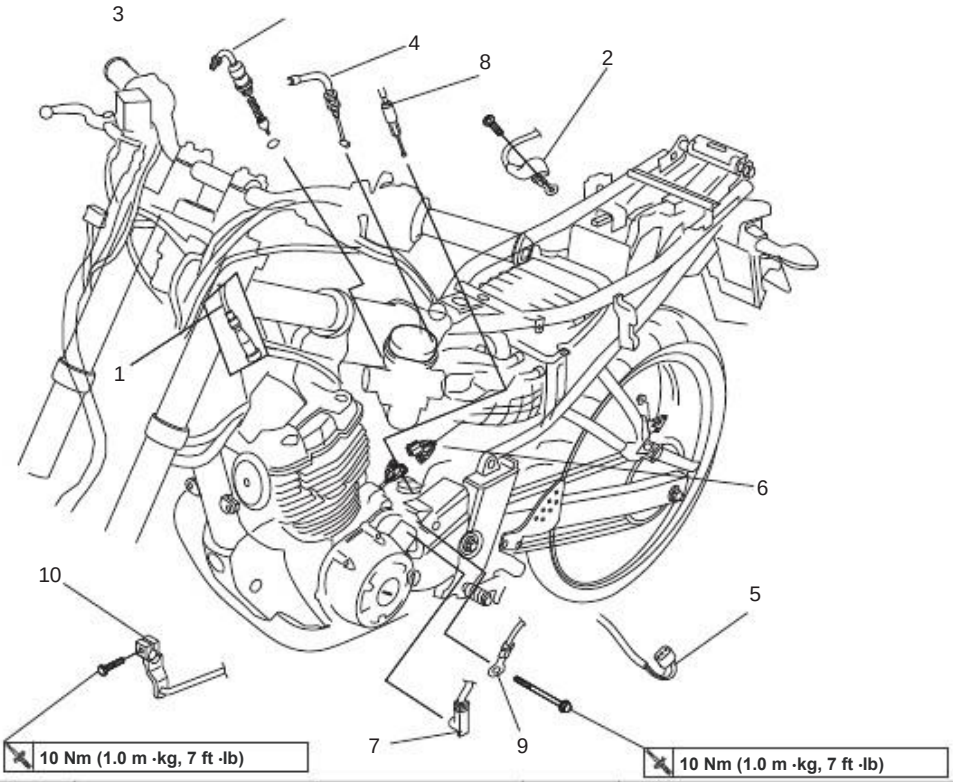

Order	Procedure / Parts to remove	Amount	Observations
			CAUTION **First, disconnect the negative battery cable and then positive battery.**
	Negative battery cable / wire positive battery		Refer to "CHECKING AND CHARGING BATTERY "on page 7-34
	Engine Oil		Drain. See "OIL CHANGE MOTOR "on page 3-9
			See "TANK FUEL "on page 4-2
1	Fuel tank	1	Disconnect
2	Spark plug cap	1	Disconnect
3	Starter Cable	1	Disconnect
4	Throttle cable	1	Disconnect
5	TPS	1	Disconnect
6	Connector stator coils / connector Crankshaft Sensor	1/1	Disconnect
7	Neutral switch connector	1	Disconnect
8	Clutch cable	1	Disconnect
9	Negative battery cable	1	Disconnect
10	Changes arm	1	Disconnect
			For assembly, reverse the procedure disassembly

Downloaded from www.Manualslib.com manuals search engine

Removing the motor

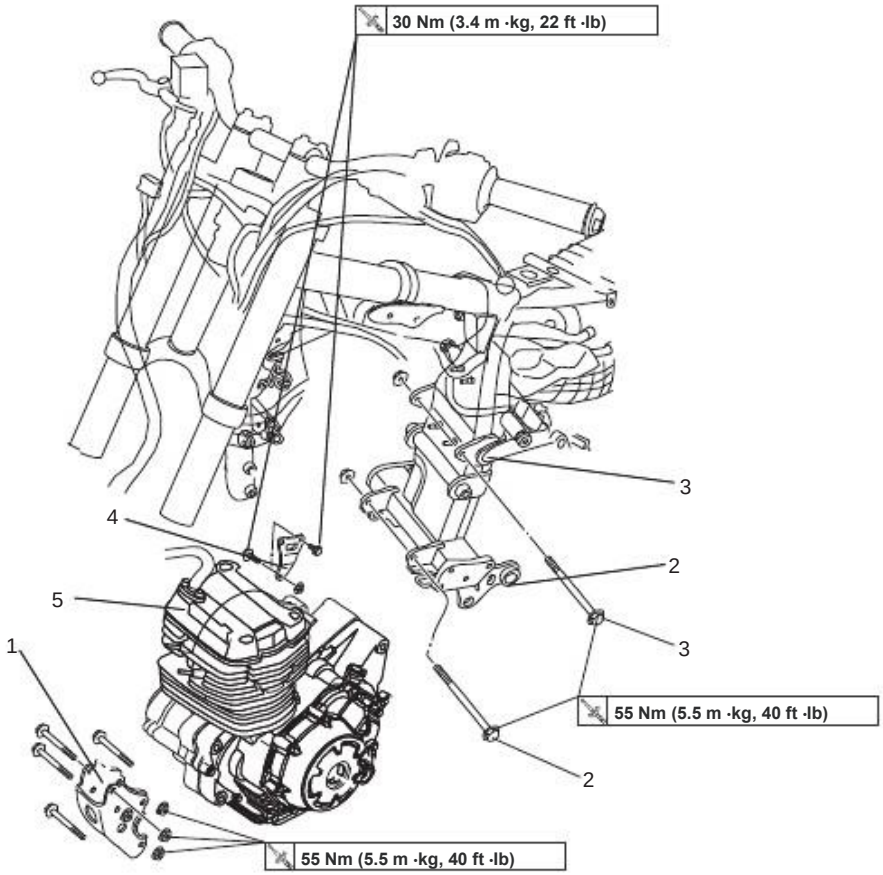

Order	Procedure / Parts to remove	Amount	Observations
	Silencer		Refer to "REMOVAL MOTOR "on page 5-1
	Fuel tank		Refer to "GENERAL CHASSIS "on page 4-2
1	Screw / nut assembly of the motor (Front Side)	4/4	
2	Screw / nut assembly of the motor (Bottom side rear)	1/1	
3	Screw / nut assembly of the motor (Top side rear)	1/1	
4	Screw / nut assembly of the motor (Upper side)	3/3	
5	Engine	1	
			For assembly, reverse the procedure disassembly.

Downloaded from www.Manualslib.com manuals search engine

MOTOR ASSEMBLY

1. Urge:
- Motor "1"
- Motor mounting screw (upper side) "2"
- Motor mounting nut (top rear side) "3"
- Motor mounting screw (rear bottom side) "4"
- Motor mounting nut (Front Side) "5"

NOTE:

Do not completely tighten the screws and nuts.

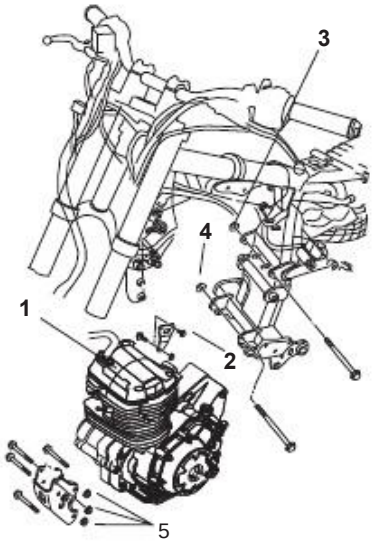

2. Press:
- Motor mounting nut (upper side)

	Engine Mounting Nut (Top side rear) 30 Nm (3.0 m · kg, 22 ft · lb)

- Motor mounting nut (Bottom side rear)

	Engine Mounting Nut (Bottom side rear) 55 Nm (5.5 m · kg, 40 ft · lb)

- Nut Engine Mounting (Front Side)

	Engine Mounting Nut (Front Side) 55 Nm (5.5 m · kg, 40 ft · lb)

ARM ASSEMBLY OF CHANGES

1. Install:
- Arm changes "1"

	Screw the arm of the changes 10 Nm (1.0 m · kg, 7.2 ft · lb)

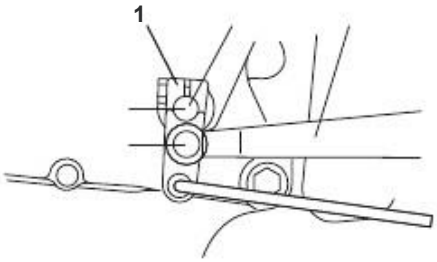

Downloaded from www.Manualslib.com manuals search engine

HEAD

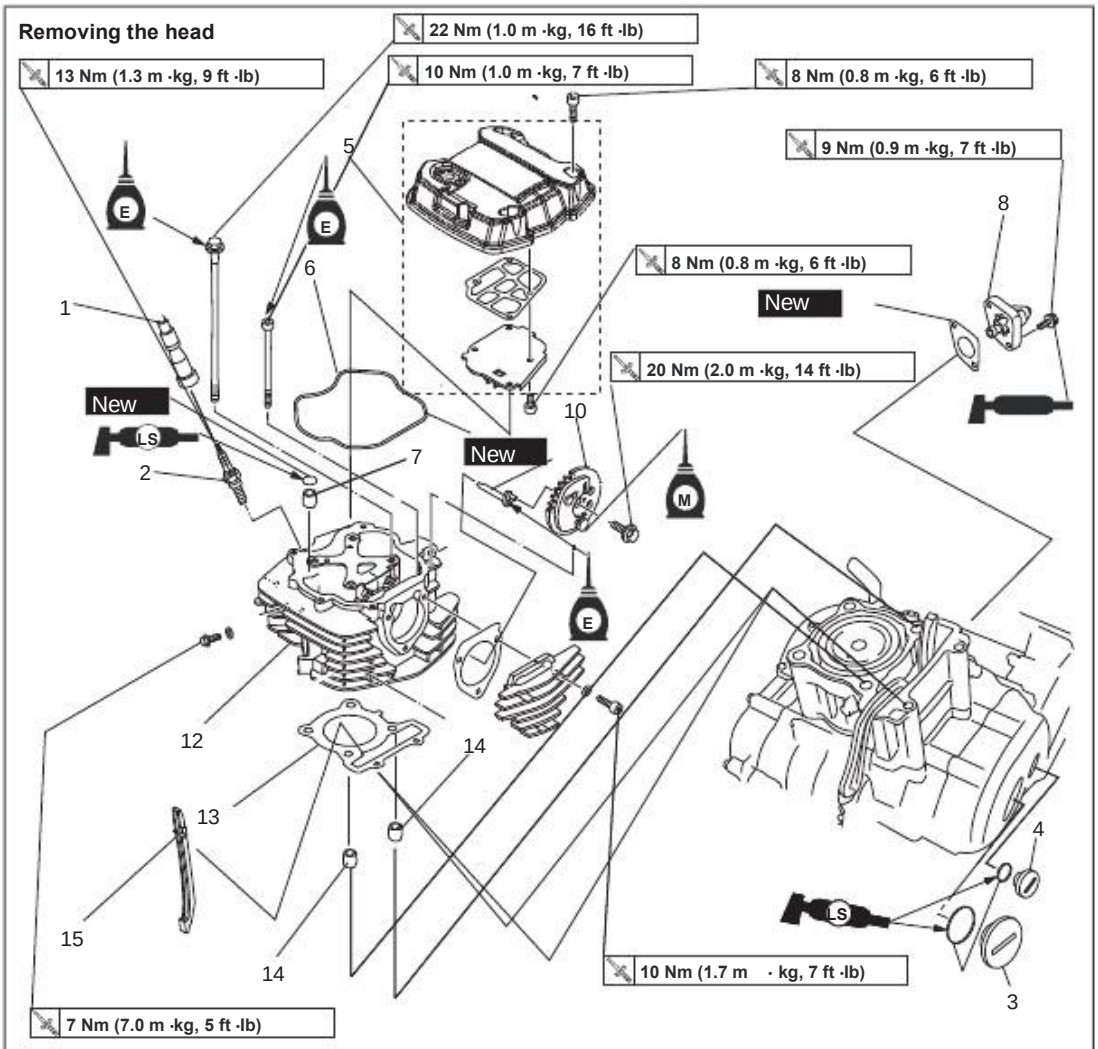

Order	Procedure / Parts to remove	Amount	Observations
	Seat, cap 1, cap 2		Refer to "GENERAL CHASSIS" on page 4-1
	Fuel tank		
	Throttle cable, starter cable, clutch cable		Disconnect Refer to "REMOVAL MOTOR "on page 5-2
	Carburetor / intake manifold		Refer to "CARBURETOR" in the page 6-1 Refer to "REMOVAL
	Silencer		MOTOR "on page 5-1 Disconnect
1	Spark plug cap	1	
2	Plug	1	
3	Access screw end of the crankshaft	1	

Downloaded from www.Manualslib.com manuals search engine

Removing the head

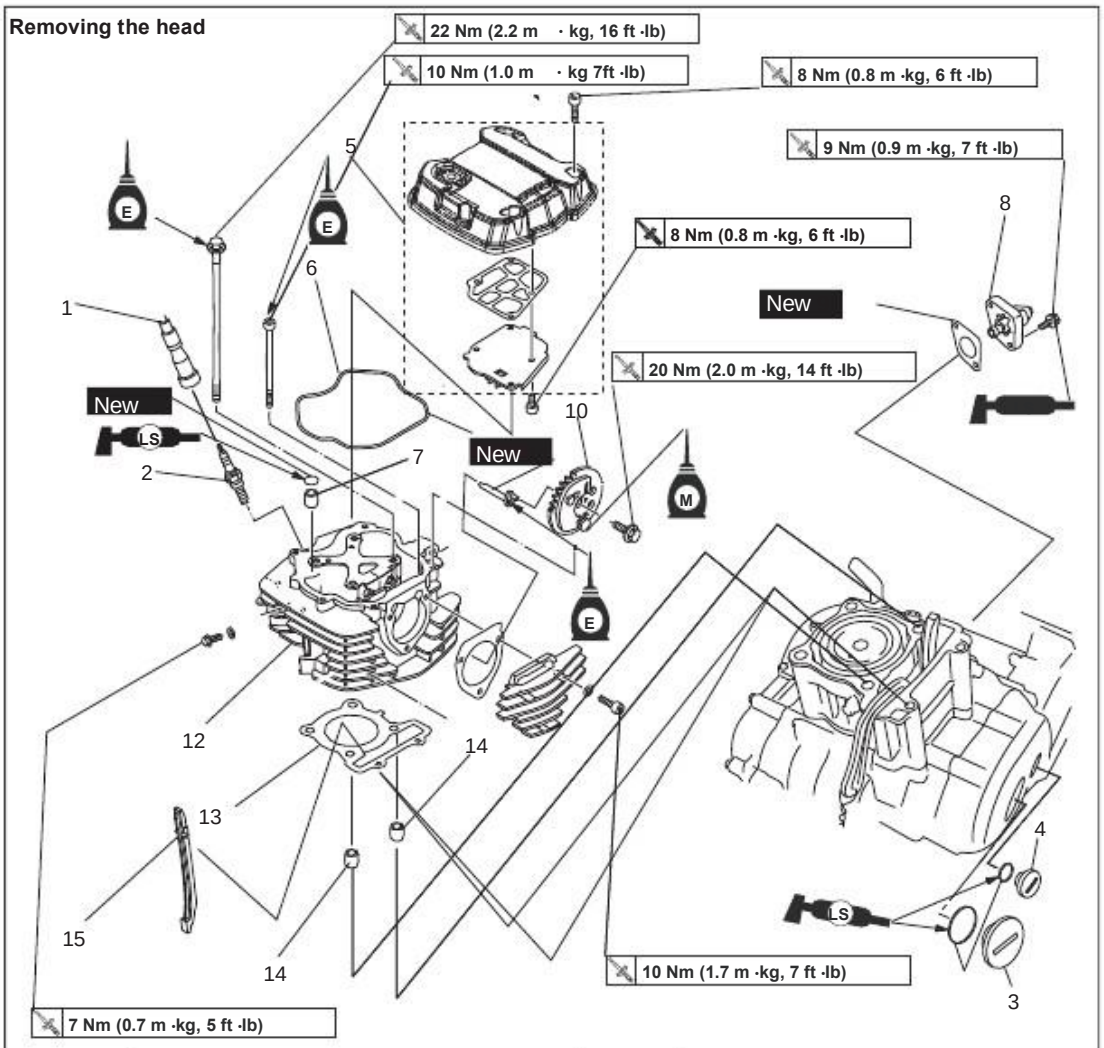

Order	Procedure / Parts to remove	Amount	Observations
4	Access screw end of the crankshaft	1	
5	Cylinder head cover	1	
6	Packing the cylinder head cover	1	
7	Dowel pin	1	
8	Tensor of the distribution chain	1	
9	Tensor packaging supply chain	1	
10	Camshaft sprocket	1	
11	Decompression cam	1	
12	Head	1	
13	Head gasket	1	
14	Dowel pin	2	
15	Guide the distribution chain (side exhaust)	1	
			For assembly, reverse the procedure disassembly.

* Adhesive Yamaha No. 1215 (Three Bond No. 1215)

Downloaded from www.Manualslib.com manuals search engine

REMOVING THE HEAD

1. Align:
• The mark "I" in the rotor magnet "a"
(With the stationary mark "b" on the cover Magneto)

a. Rotate the crankshaft counterclockwise.
b. When the piston is in the neutral upper (PMS) in the compression stroke, align the "I" of the timing sprocket "C" with the stationary mark "d" on the plate Retention of the camshaft.

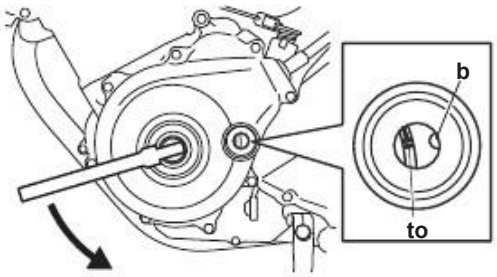

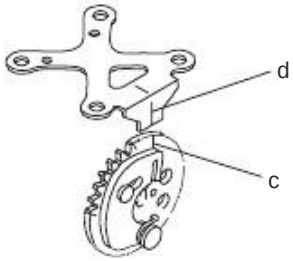

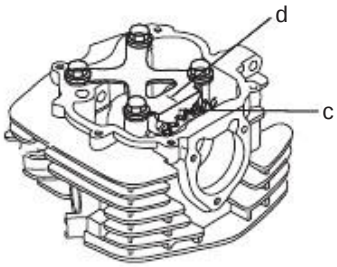

2. Loosen:
• Screw the timing sprocket "1".

NOTE:

While holding the nut with a magnet key "2", loosen the screw on the pinion shaft cams.

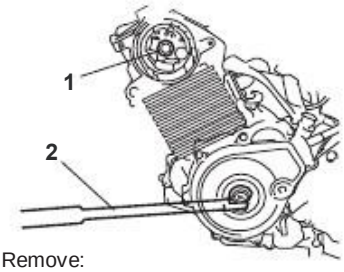

3. Remove:
•Camshaft sprocket.

NOTE:

To prevent the falling timing chain into the crankcase, hold it with a cable.

4. Remove:
•Stock.

NOTE:

•Loosen the screws in the correct sequence, as shown.
•Loosen each bolt 1/2 turn each time. After all screws are fully loose, remove them.

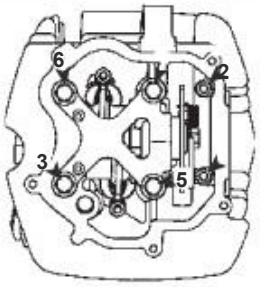

INSPECTION OF THE HEAD

1. Delete:
•Carbon deposits from the chamber combustion (with a scraper round).

NOTE:

Do not use sharp instruments to prevent damage or scratches in:
•Spark plug thread
•Valve seats.

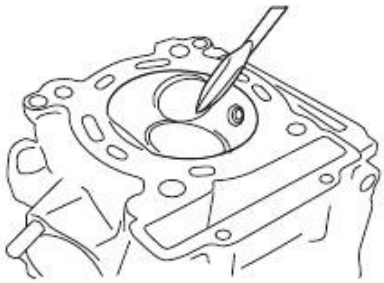

Downloaded from www.Manualslib.com manuals search engine

2. Check:
•Stock.
Damage / Scratches →Replace.
•Water jacket of the cylinder head
Mineral deposits oxide / Remove.
3. Measure:
•Deformation of the cylinder head.
Out of specification →Rectify the butt.

Limit deformation
0.03 mm

a. Put a rule "1" and a thickness gauge "2" along the cylinder head.

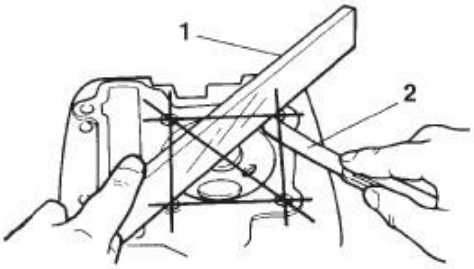

b. Measure the deformation.
c. If the limit is exceeded, correct butt as follows.
d. Place a wet 400-600 sandpaper on surface plate and adjust the head with a sanding pattern in a figure eight.

NOTE:

To ensure a level surface, turn the cylinder several times.

INSPECTION OF GEAR TREE AND GUIDE CAM CHAIN DISTRIBUTION

1. Check:
•Camshaft sprocket

More than 1/4 of attrition "to" in the tooth
Replace the camshaft sprocket, the chain and the crankshaft as a whole.

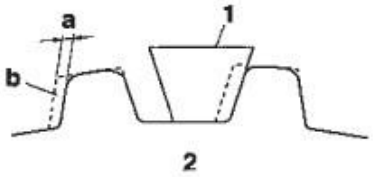

a. ¼ tooth
b. Correct
1. Contact roller chain
2. Camshaft sprocket

2. Check:
•Guide the distribution chain (Side Exhaust)
Damage / wear Replace.

CHECKING THE TIMING CHAIN TENSIONER DISTRIBUTION

1. Check:
•Tensor chain.
Cracks / damage / movement
Replace unequal.

a. Lightly press the tensioner rod chain inside the box
tensor of the distribution chain to the hand.

NOTE:

While pressing the rod chain tensioner distribution, turn to the right with a thin screwdriver "1" until it stops

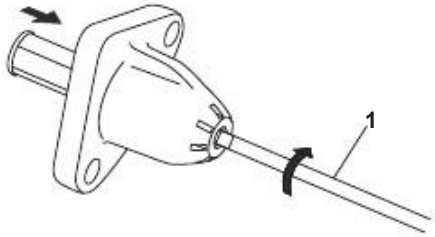

b. Remove the screwdriver and slowly release the tensioner rod chain.
c. Make sure the tensioner rod chain leaves the box
chain tensioner without dist ribución
probl emas. If there is sudden movement procedures, replace the tensioner chain.

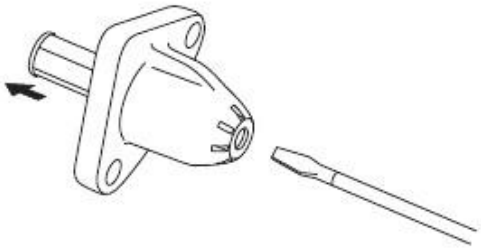

Downloaded from www.Manualslib.com manuals search engine

INSPECTION SYSTEM DECOMPRESSION

1. Check:
 • Decompression System
a. Check the decompression system with camshaft sprocket and the cam decompression installed on the camshaft.
b. Verify that the decompression lever "1" moves smoothly.
c. Without operating the decompression lever, verify that the decompression cam "2" projects from the camshaft (cams Exhaust) as shown in Figure "A".
d. Move the decompression lever "1" shown in the direction of the arrow verify that the decompression cam is not projects from the camshaft (cams Exhaust) as shown in Figure "B".

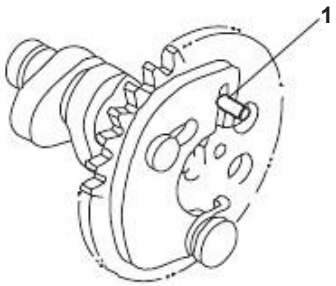

A

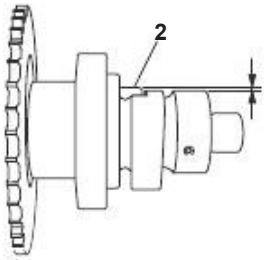

B

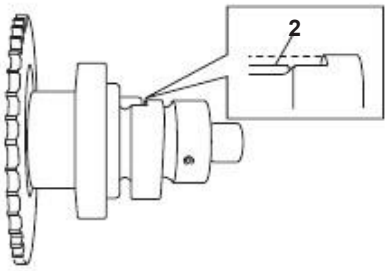

HEAD ASSEMBLY

1. Assembly:
 •Stock.

NOTE:

Pass the chain through the cavity of the chain.

2. Press:
 •Head bolts "1".

	Cylinder head bolts **22 Nm (2.2 m · kg, 16 ft · lb)**

 •Head bolts "2".

	Cylinder head bolts **10 Nm (1.0 m · kg, 7.2 ft · lb)**.

NOTE:

•Lubricate the threads of the cylinder head bolts with engine oil.
•Tighten the cylinder head bolts in the sequence specified as shown and tighten two steps.

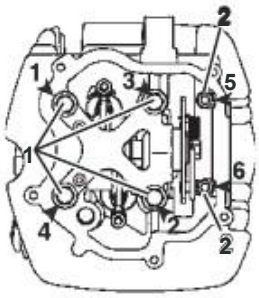

3. Assembly:
 •Camshaft sprocket.

a. Rotate the crankshaft counterclockwise.
b. Align the mark "I" in the rotor magnet "a" with the stationary mark "b" on the cover Magneto

Downloaded from www.Manualslib.com manuals search engine

c. Align the "I" of the timing sprocket "C" with the stationary mark "d" on the plate Retention of the camshaft.
d. Install the timing chain on the pinion camshaft and then install the pinion camshaft camshaft.

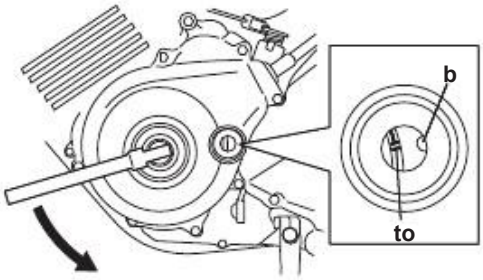

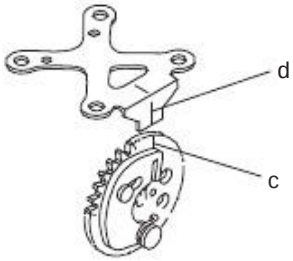

NOTE:

When installing the camshaft sprocket, make sure to maintain the chain on the side Exhaust so tensioned as possible.

CAUTION

Do not rotate the crankshaft when installing the tree Cam to prevent damage or performance Improper valve.

e. While holding the camshaft, tighten temporarily screw shaft pinion Camshaft.
f. Remove the cable from the supply chain.
4. Install:
•Packaging chain tensioner distribution
•Tensor of the distribution chain
a. While gently pushing rod tensor of the distribution chain to the hand, turn it clockwise with a thin screwdriver "1".
b. With the rod of the chain tensioner distribution rotated fully into the box tensor of the distribution chain (with the thin screwdriver still installed), install gasket and chain tensioner Distribution "2" in the cylinder body.

c. tighten the chain tensioner distribution "3" to the specified torque.

	Screw the chain tensioner distribution 9 Nm (0.9 m · kg, 7 ft · lb)

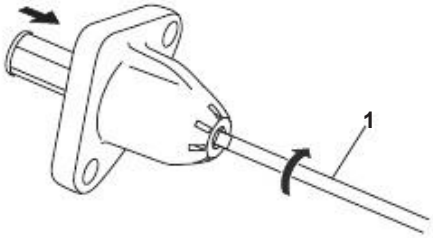

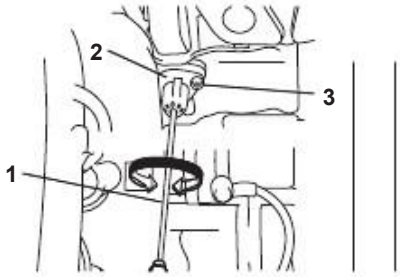

d. Remove the screwdriver, make sure the rod tensor of the distribution chain back.

5. Turn:
•Crankshaft (Several times clockwise)
6. Check:
•"I" mark "a"
Align the "I" of the magnet with the brand stationary "b" in the magneto cover.

•"I" mark "c"
Align the "I" of the camshaft sprocket with the stationary mark "d" in the butt.

Outside the correct alignment
See the previous assembly steps.

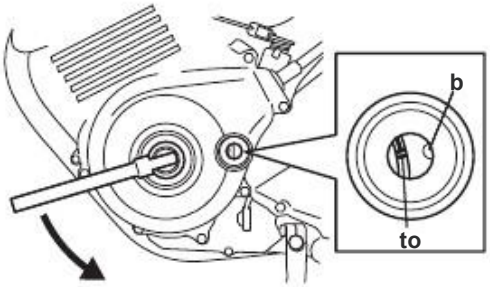

Downloaded from www.Manualslib.com manuals search engine

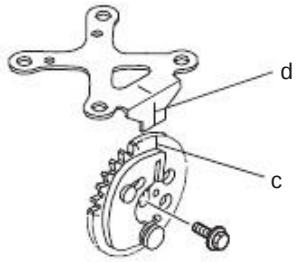

7. Press:
•Screw camshaft sprocket

	Screw camshaft sprocket **20 Nm (2.0 m · kg, 14 ft · lb)**

PRCAUCIÓN

Be sure to tighten the screw on the pinion camshaft to the specified torque avoid the possibility that the screw is loosened and damaging the motor.

8. Measure:
•Valve clearance
Out of specification Adjust.
Refer to "ADJUSTING THE VALVE CLEARANCE "on page 3-3.

Downloaded from www.Manualslib.com manuals search engine

CAMSHAFT

Removing the rocker arms and camshaft

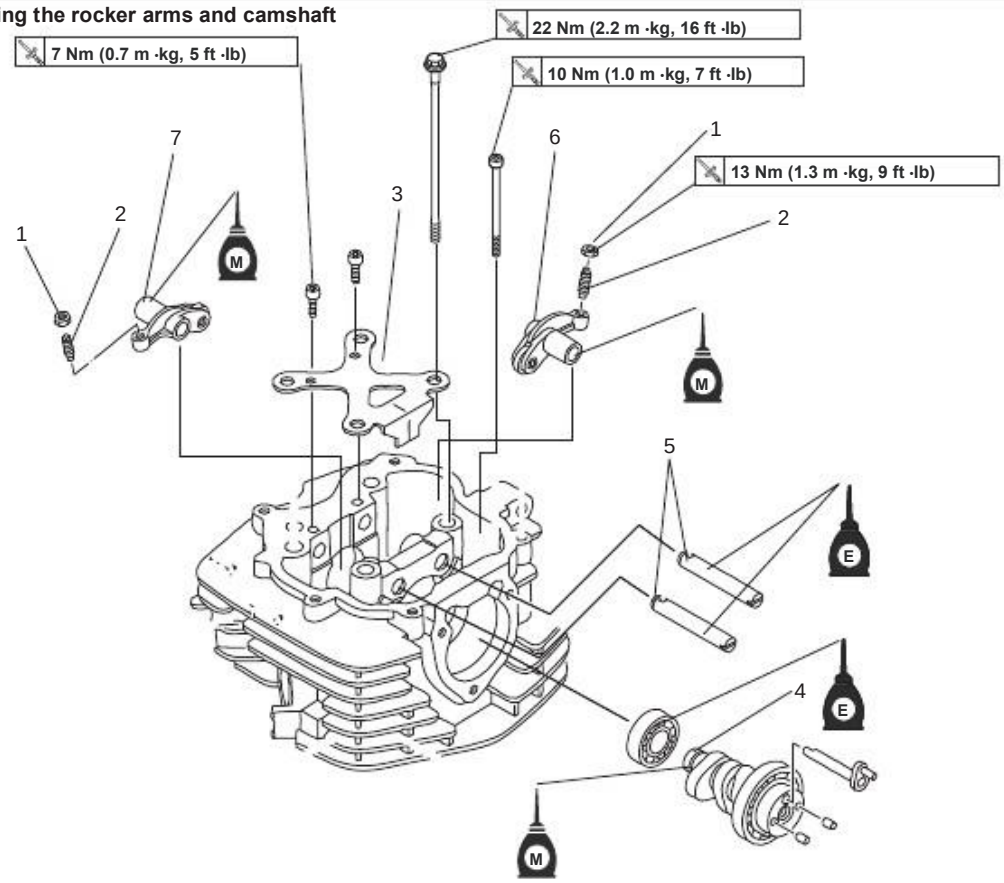

Order	Procedure / Parts to remove	Amount	Observations
	Head		See the "HEAD" on page 5-5
1	Locknut	2	
2	Adjusting screw	2	
3	Retainer camshaft bearing	1	
4	Camshaft	1	
5	Rocker	2	
6	Intake rocker	1	
7	Exhaust rocker	1	
			For assembly, reverse the procedure disassembly.

Downloaded from www.Manualslib.com manuals search engine

REMOVING THE ROCKER AND CAMSHAFT

1. Loosen:
 • Locknut "1"
 • Screw adjustment valve clearance "2"
 • Rocker "3"

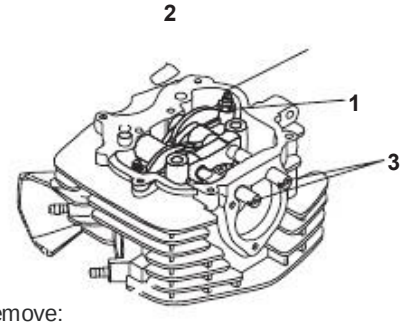

2. Remove:
 • Camshaft "1"

NOTE:

8-mm screw "2" on the threaded end of camshaft and then remove the camshaft.

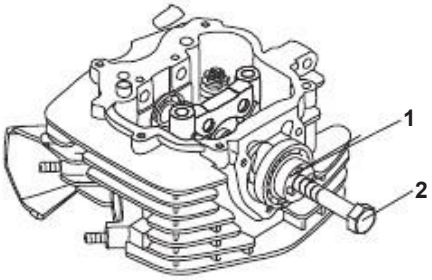

CAMSHAFT INSPECTION

1. Check:
 • Camshaft lobes
 Blue discoloration / pitting /
 Replace scratched the camshaft.
2. Measure:
 • Dimension of the lobes Camshaft "A" and "b"
 Out of specification Replace camshaft.

Dimensions of the lobes of camshaft

Admission to
31342-31442 mm
Limit
31,342 mm

Admission B
25166-25266 mm
Limit
25,136 mm

Escape A
31110-31210 mm
Limit
31,080 mm

Escape B
25096-25196 mm
Limit
25,066 mm

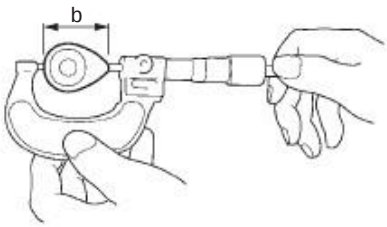

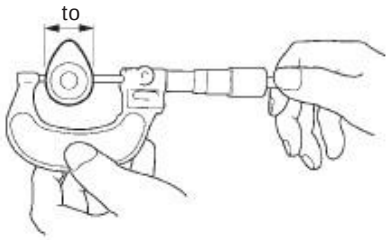

3. Check:
 • passage of the camshaft oil
 Blow compressed air obstructed

CHECKING THE ROCKER AND AXLES
THE ROCKER

The following procedure applies to all swings and rockers.

1. Check:
 •Rocker
 Damage / wear Replace.

Downloaded from www.Manualslib.com manuals search engine

2. Check:
- Shaft Rocker
  Blue discoloration / wear excessive
  bite / scratch Replace to verify
  the lubrication system.

3. Measure:
- Internal diameter of the beam "A"
  Replace out of specification.

Inner diameter of the beam
9985-10000 mm
Limit
10,030 mm

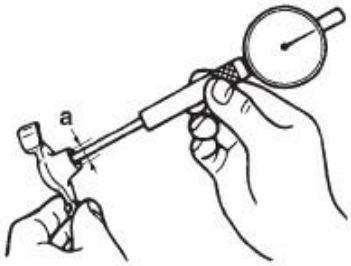

4. Measure:
- Outer diameter of the beam "A"
  Replace out of specification.

Outer diameter of the beam
9966-9976 mm
Limit
9,950 mm

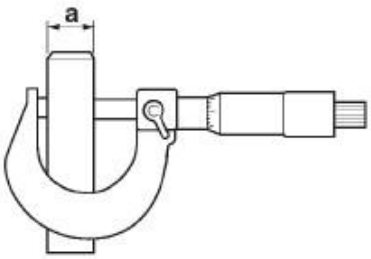

5. Calculate:
- Clearance between the rocker and the rocker

NOTE:

Calculate the clearance subtracting the OD
rocker shaft bore
beam.

Out of specification defective parts.	Replace

Clearance between the rocker and the aje
Rocker
0009-0034 mm
Limit
0.08 mm

CAMSHAFT ASSEMBLY AND ROCKER

1. Lubricate:
- •Rockers
- •Rocker shafts

Recommended lubricant
Inner surface of the rocker
Molybdenum disulfide oil
Rocker arm shaft
Motor oil

2. Lubricate:
- •Camshaft

Recommended lubricant
Camshaft
Molybdenum disulfide oil
Camshaft bearings
Motor oil

3. Install:
- •Intake and exhaust rocker
- •Rocker shaft

Downloaded from www.Manualslib.com manuals search engine

VALVES AND VALVE SPRINGS

Removing the valves and valve springs

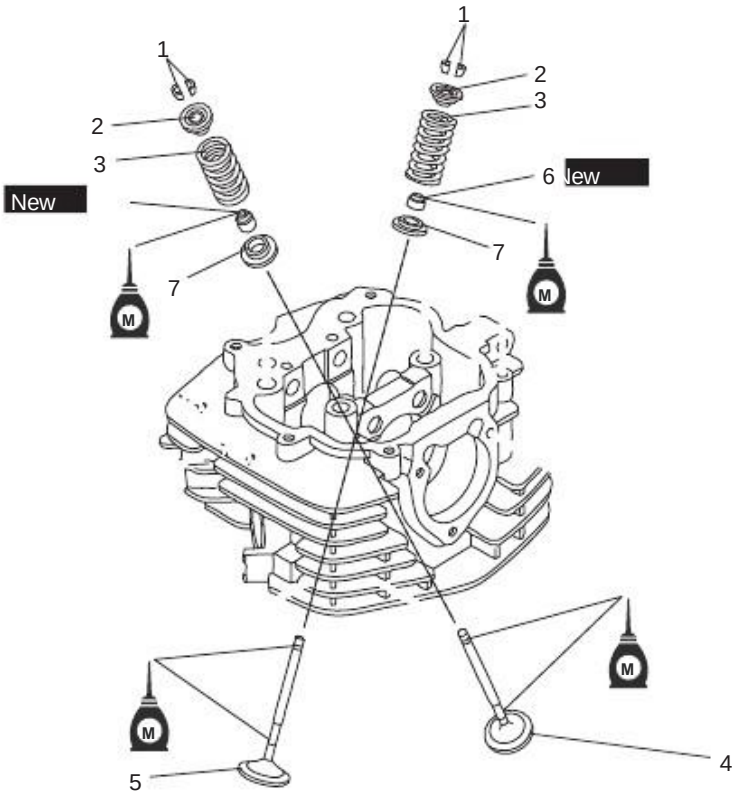

Order	Procedure / Parts to remove	Amount	Observations
	Head		See the "HEAD" on page 5-5
	Rocker / Camshaft		Refer to "CAMSHAFT" in page 5-12
1	Valve Pin	4	
2	Upper spring seat valve	2	
3	Valve spring	2	
4	Intake valve	1	
5	Exhaust valve	1	
6	Seal valve stem	2	
7	Lower spring seat valve	2	
8	Valve guide	2	
			For assembly, reverse the procedure disassembly.

Downloaded from www.Manualslib.com manuals search engine

VALVES AND VALVE SPRINGS

REMOVING THE VALVES

The following procedure applies to all valves and related components.

NOTE:
Before removing the internal parts of the head (For example, valves, valve springs, valve seats), make sure the valve seal well.

1. Check:
   •Sealing valves
   Leaking check valve seat face of the valve, valve seats, and the width of the valve seat.
   See "VERIFICATION VALVE SEATS "on page 5-17.
a. Pour a clean solvent "to" on ports Input and Output
b. Check valve seal

NOTE:
There is no leakage in the seat Valve "1".

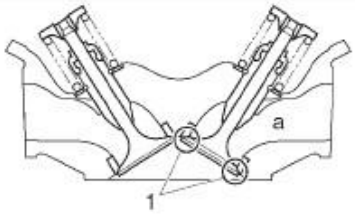

2. Remove:
   •Valve pin "1".

NOTE:
Remove pin compressing the valve valve spring with the spring compressor valve and the adapter compressor Valve spring "2"

Valve spring compressor
YSST-603
Spring compressor adapter Valve
YSST-803 A

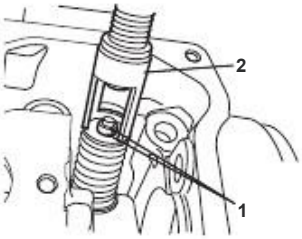

3. Remove:
   •Upper spring seat valve "1"
   •Valve spring "2"
   •Valve "3"
   •Stem seal valve "4"
   •Lower spring seat valve "5"

NOTE:
Identify the position of each part with much care that can be reinstalled in their original place.

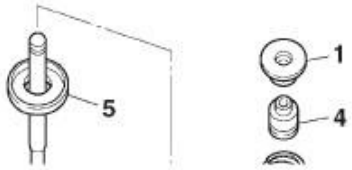

INSPECTION AND VALVES VALVE GUIDES

The following procedure applies to all valves and valve guides.

1. Measure:
   • clearance between the valve stem and the Valve guides
   Out of specification Replace the stock

• clearance between the valve stem and the Valve guides = Inner diameter valve guide "a" - shank diameter Valve "b"

Clearance between the stem valve and the valve guide (Admission)
0010-0037 mm
Limit
0,080 mm
Clearance between the stem valve and the valve guide (Escape)
0025-0052 mm
Limit
0.100 mm

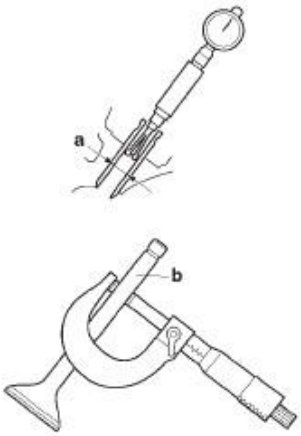

Clearance valve and valve guide = a-b

Downloaded from www.Manualslib.com manuals search engine

2. Delete:
 • Carbon deposits
 (From the valve face and valve seat)
3. Check:
 • Side valve
 Pitting / wear face Grind
 the valve.
 • End of the valve stem
 Mushroom or a larger diameter than the
 Replace valve stem and the valve.
4. Measure:
 • thickness of the valve margin D "a"
 Out of specification Replace the valve.

Thickness of the valve margin D (Admission)
From 0.50 to 0.90 mm
Thickness of the valve margin D (Escape)
From 0.50 to 0.90 mm)

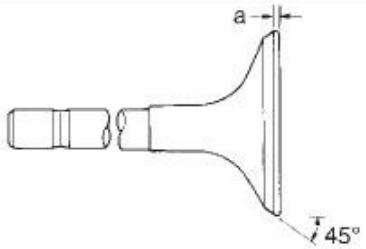

5. Measure:
 • Deformation of the valve stem
 Out of specification Replace the valve.

NOTE:

• When installing a new valve, always replace the valve guide.
• If the valve is removed or replaced always replace the stem seal the valve.

Deformation limit
Valve stem
0.010 mm

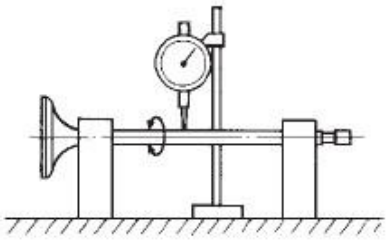

INSPECTION OF THE SEATS OF THE VALVES

The following procedure applies to all valves and valve seats.

1. Delete:
 • Carbon deposits
 (From the valve face and valve seat)
2. Check:
 • Valve seat
 Pitting / wear Replace the cylinder head.
3. Measure:
 • width valve seat C "a"
 Replace out of specification stock.

Width of the valve seat C(Admission)
0.90-1.10 mm
Width of the valve seat C(Escape)
0.90-1.10 mm)

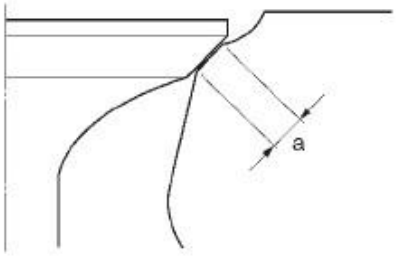

a.Instale the valve in the cylinder head.

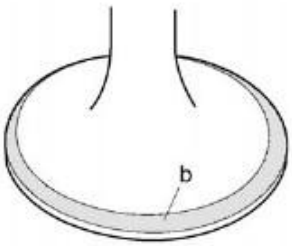

b. Pressing the valve through the guide valve and the valve seat to a clear impression.

c. Measure the width of the valve seat.

NOTE:

When the valve seat and the face of the valve have been in contact with each other, the blue dye will have been eliminated.

Downloaded from www.Manualslib.com manuals search engine

4. Rectify:
 •Valve face
 •Valve seat

NOTE:
After replacing the cylinder head or replacing the valve and valve guide must be lapped the valve seat and the face of the valve

a. Apply lapping compound secondary "A" to the face of the valve.

CAUTION

Do not let the lapping compound enter between the valve stem and guide valve.

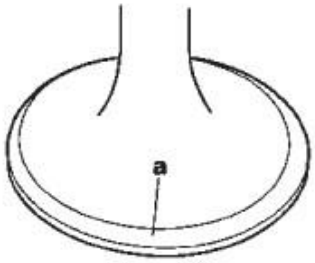

b. Apply molybdenum disulfide oil in the valve stem.

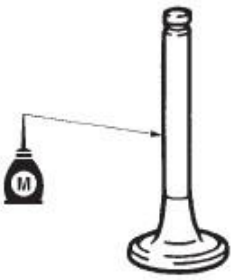

c. Install the valve in the cylinder head
d. Turn the valve until the face of the valve guide and valve seats are uniformly bright, then clean all the lapping compound.

NOTE:
For best lapping results, hit
Gently seat the valve while
turn the valve back and forth between your hands.

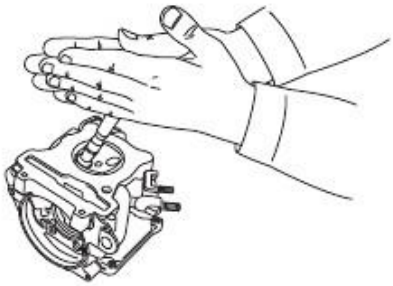

e. Apply a fine lapping compound to the face valve and repeat the steps above.
f. After every lapping procedure, be sure to clean all of the mixture to lapping the face of the valve seat the valve.

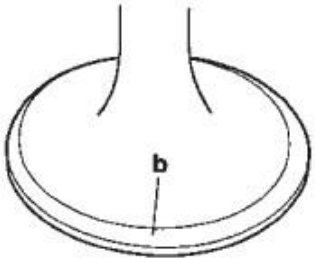

g. Install the valve in the cylinder head.
h. Pressing the valve through the end of the valve guide and seat of the valve to make a clear impression.
i. Measure the width of the valve seat "c" again. If the width of the valve seat is out of specification, and rectifíquelo lapping again the valve seat.

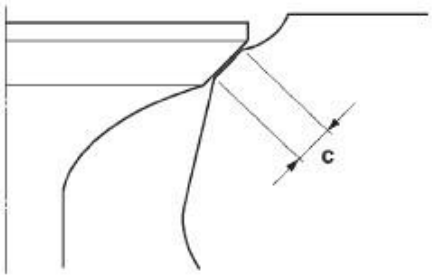

CHECKING THE VALVE SPRINGS
The following procedure applies to all valve springs.
1. Measure:
 •Free length of the valve spring "a"
 Out of specification Replace valve spring.

Downloaded from www.Manualslib.com manuals search engine

Free length (Admission)
39.40 mm
Limit
37.40 mm
Free length (Escape)
39.40 mm
Limit
37.40 mm

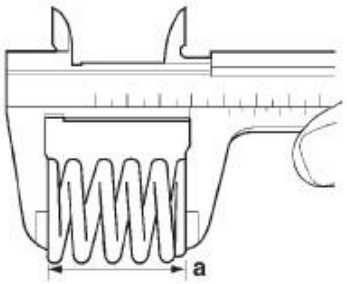

2. Measure:
•Compression force of the spring installed
Valve "a"
Out of specification Replace
valve spring.

Compression strength installed
Spring (Admission)
160-184
Compression strength installed
Spring (Escape)
160-184
Installed length (Admission)
34.50 mm
Installed length (Escape)
34.50 mm

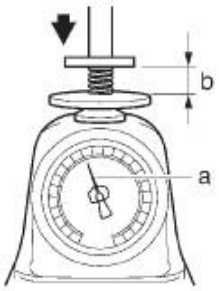

b. Installed length

3. Measure:
•Tilt the valve spring "a"
Out of specification Replace
valve spring.

Tilt Spring
compression (Admission)
2.5 ° / 1.7 mm
Tilt Spring
compression (Escape)
2.5 ° / 1.7 mm

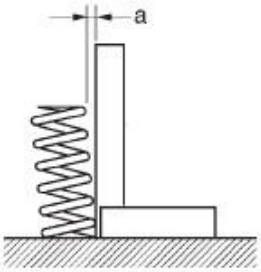

VALVE ASSEMBLY
The following procedure applies to all valves and related components.
1. Remove burrs:
•End of the valve stem
(With a stone oil)

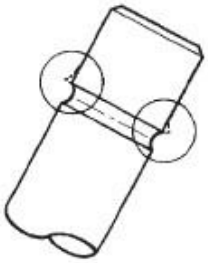

2. Lubricate:
•Valve stem "1"
•Stem seal valve "2"
(With the recommended lubricant)

With the recommended lubricant
Molybdenum disulfide oil

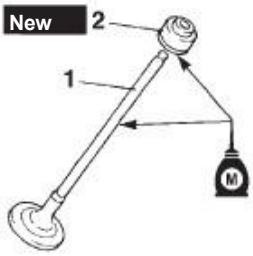

3. Install:
• Lower spring seat valve "1"

Downloaded from www.Manualslib.com manuals search engine

•Stem seal valve "2"
•Valve "3"
•Valve spring "4"
•Upper spring seat valve "5"
(In stock)

NOTE:

•Ensure that each valve is installed in its original position
•Install the valve with the long end "a" upwards.

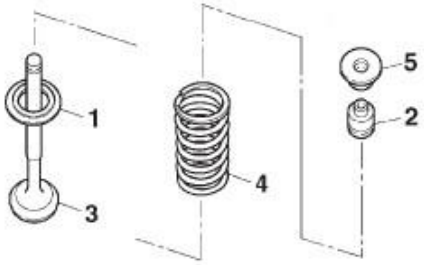

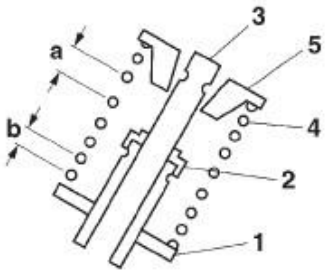

b. Short end

4. Install:
•Valve pin "1"

NOTE:

Install the valve pin compressing the valve spring with the spring compressor valve and the adapter compressor
Valve spring "2"

	Valve spring compressor **YSST-603** **Spring compressor adapter** **Valve** **YSST-803 A**

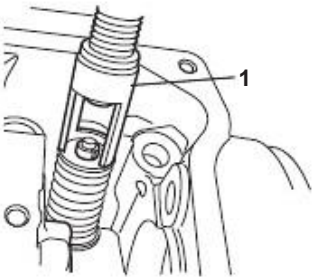

5. To secure the valve pin in the valve stem, lightly tap the tip of the valve with a hammer in the face soft.

CAUTION

Hitting the valve tip with a force Excessive damage the valve.

Downloaded from www.Manualslib.com manuals search engine

CYLINDER AND PISTON

Removal of the cylinder and piston

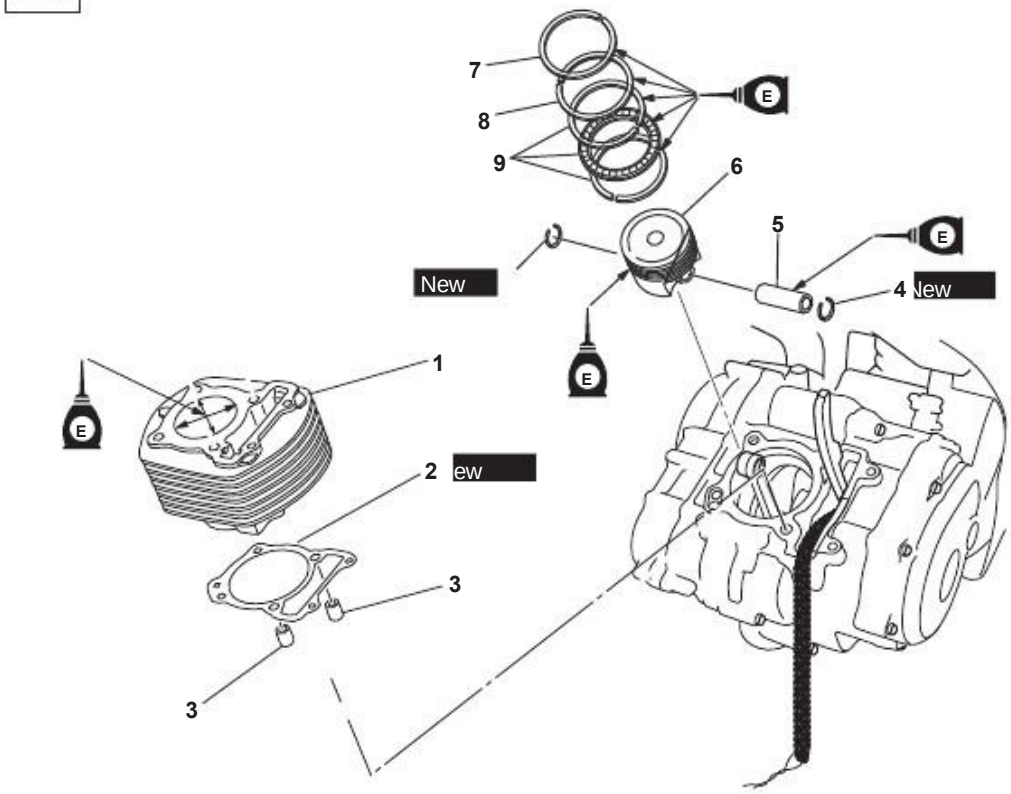

Order	Procedure / Parts to remove	Amount	Observations
	Head		See the "HEAD" on page 5-5
1	Cylinder	1	
2	Cylinder gasket	1	
3	Dowel pin	2	
4	Piston pin	2	
5	Piston pin	1	
6	Piston	1	
7	Top Ring	1	
8	Second ring	1	
9	Oil ring	1	
			For assembly, reverse the procedure disassembly.

Downloaded from www.Manualslib.com manuals search engine

REMOVING THE CYLINDER AND PISTON

1. Remove:
 •Piston pin "1"
 •Piston pin "2"
 •Piston "3"

CAUTION

Do not use a hammer to remove the bolt from piston

NOTE:

•Before removing the piston pin, cover the crankcase opening with a clean cloth prevent the piston pin from falling into the crankcase.

•Before removing the piston pin, clean burrs from piston pin pin and slot of the piston area.

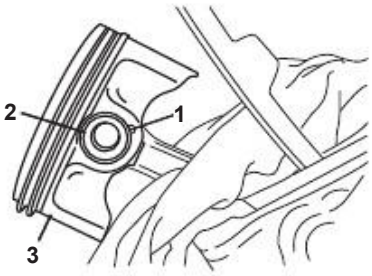

2. Remove:
 •Top Ring
 •Second ring
 •Oil ring

NOTE:

When removing a piston ring, open end inal with your fingers and lift the other side of the ring on the piston head.

INSPECTION OF CYLINDER AND PISTON

1. Check:
 •Wall of the piston
 •Cylinder wall
  Replace cylinder vertical scratches, piston and piston rings, as a whole.
2. Measure:
 •Piston-cylinder clearance

a. As the cylinder diameter "C" with the cylinder with the meter diameter drum.

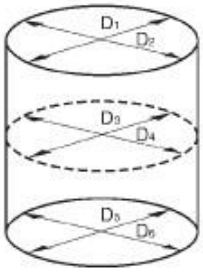

NOTE:

Measure cylinder bore "C" verifying measures side by side and forward measures rearwardly of the cylinder. Then, find the average of the measurements.

	Diameter **58000-58010 mm**

Downloaded from www.Manualslib.com manuals search engine

"C" = maximum of D1-D2
"T" = maximum of D1 or D2 - D5 or D6 maximum
"R" = maximum of D1, D3 or D5 - minimum of D2, D 4 or D6

b. If out of specification, replace the cylinder, piston and piston rings, as a whole.

c. Measure the diameter of the piston skirt "D" "A" with the micrometer.

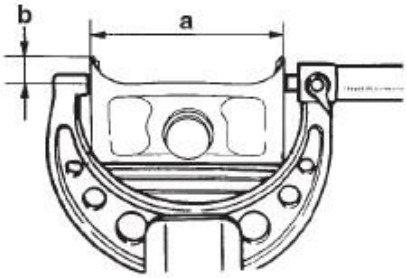

b. 5.0 mm (0.20 in) from the lower edge piston

Piston
Diameter D
53970-53985 mm

d. If out of specification, replace the piston and piston rings as a whole.

e. Calculate the piston-cylinder clearance with the following formula.

•Piston-cylinder clearance = Diameter Cylinder "C" - Piston skirt diameter "D"

Piston-cylinder clearance
0020-0035
Limit
0.15 mm

f. If out of specification, replace the cylinder, piston and piston rings, as a whole.

CHECKING THE PISTON RINGS

1. Measure:
   •Ring side clearance
   Out of specification Replace the piston and piston rings, as a whole.

NOTE:

Before measuring the slack side of the ring, remove carbon deposits from the slots piston and rings.

Piston ring
Top Ring
Ring side clearance
0030-0065 mm
Limit
0.100 mm
Second ring
Ring side clearance
0020-0055 mm
Limit
0.100 mm

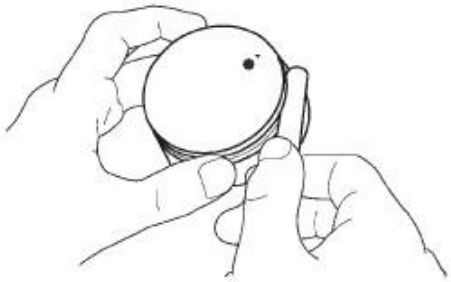

2. Install:
   •Piston Ring
   (Inside the cylinder)

NOTE:

Level the piston ring into the cylinder with the piston head.

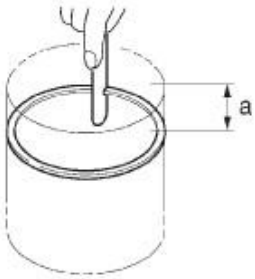

a. 40mm

Downloaded from www.Manualslib.com manuals search engine

3. Measure:
•Distance between centers of rings
Out of specification Replace
piston rings.

NOTE:
The opening of the oil ring spacer
can not be measured. In case the opening
oil ring is excessive, replace
three segments as a whole.

Piston ring
Top Ring
Distance between centers of ring
(Installed)
0.10 to 0.25 mm
Limit
0.40 mm
Second ring
Distance between centers of ring
(Installed)
0.10 to 0.25 mm
Limit
0.40 mm
Oil ring
Distance between centers of ring
(Installed)
0.20 to 0.70 mm

CHECKING THE PISTON PIN

1. Check:
•Piston pin
Blue discoloration / grooves Replace
piston pin and then check the system
Lubrication
2. Measure:
•Outside diameter of piston pin "a"
Out of specification Replace
piston pin

Pin Outside Diameter
piston
14995-15000 mm
Limit
14,975 mm

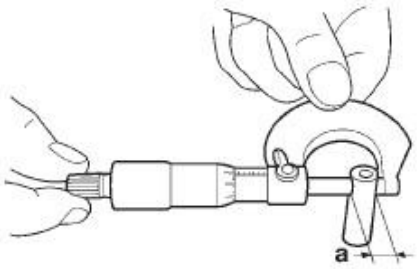

3. Measure:
•Inner diameter of the pin
Piston "a"
Out of specification Replace the piston

Inner diameter of
piston pin
15002-15013
Limit
15,043 mm

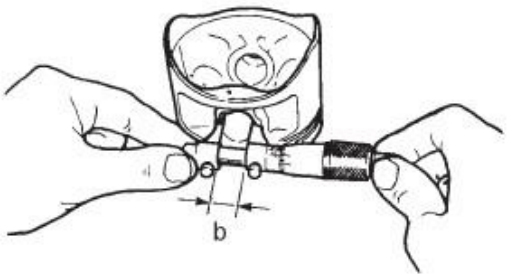

4. Calculate:
•Clearance piston pin - bore
the piston pin hole
EspecificaciónReemplace outside the
piston rod and piston as a whole.

•Clearance piston pin - bore
the piston pin hole diameter =
inside the piston pin hole "b" -
Outside diameter of piston pin "a"

ASSEMBLY PISTON AND CYLINDER

1. Install:
•Top Ring "1"
•Second ring "2"
•Oil ring expansion "3"
•Lower guide ring oil "4"
•Oil ring upper guide "5"

NOTE:
Be sure to install the piston rings
so that makes the manufacturer or numbers
are up.

Downloaded from www.Manualslib.com manuals search engine

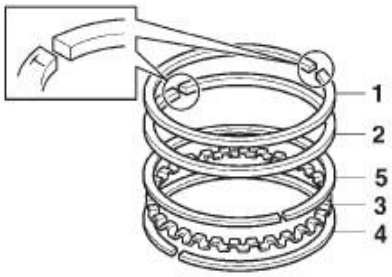

2. Install:
•Piston "1"
•Piston pin "2"
•Piston pins "3"

NOTE:

•Apply engine oil to the piston pin.
•Make sure the arrow mark "a"
piston pointing towards the exhaust side of the cylinder.
•Before installing the piston pin pin,
cover the crankcase opening with a clean
to prevent the pin from falling into the crankcase.

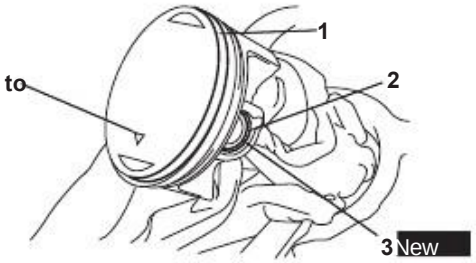

3. Lubricate:
- Piston
- Piston ring
- Cylinder
(With the recommended lubricant)

	Recommended lubricant **Engine Oil**

4. Scroll:
- Tips piston rings

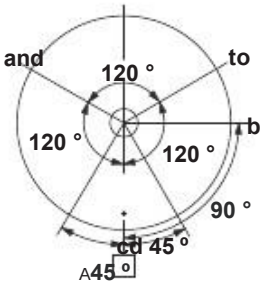

a. Top Ring
b. Oil ring expander
c. Oil ring upper guide
d. Lower guide ring oil
e. Second ring
A. Exhaust side

5. Install:
- Pin plug
- Cylinder Head Gasket ew
- Cylinder "1"

NOTE:

•While compressing piston rings
one hand, install the cylinder with the other hand.
Pass the timing chain and guide
•distribution chain (intake side) to
through the cavity of the chain.

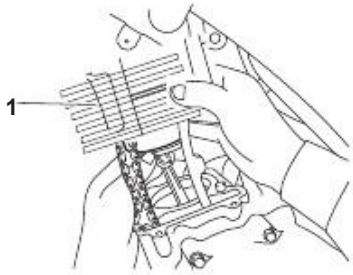

	Base for the piston **YSST-604**

Downloaded from www.Manualslib.com manuals search engine

MAGNETO AND STARTER CLUTCH

Removing the magneto and starter clutch

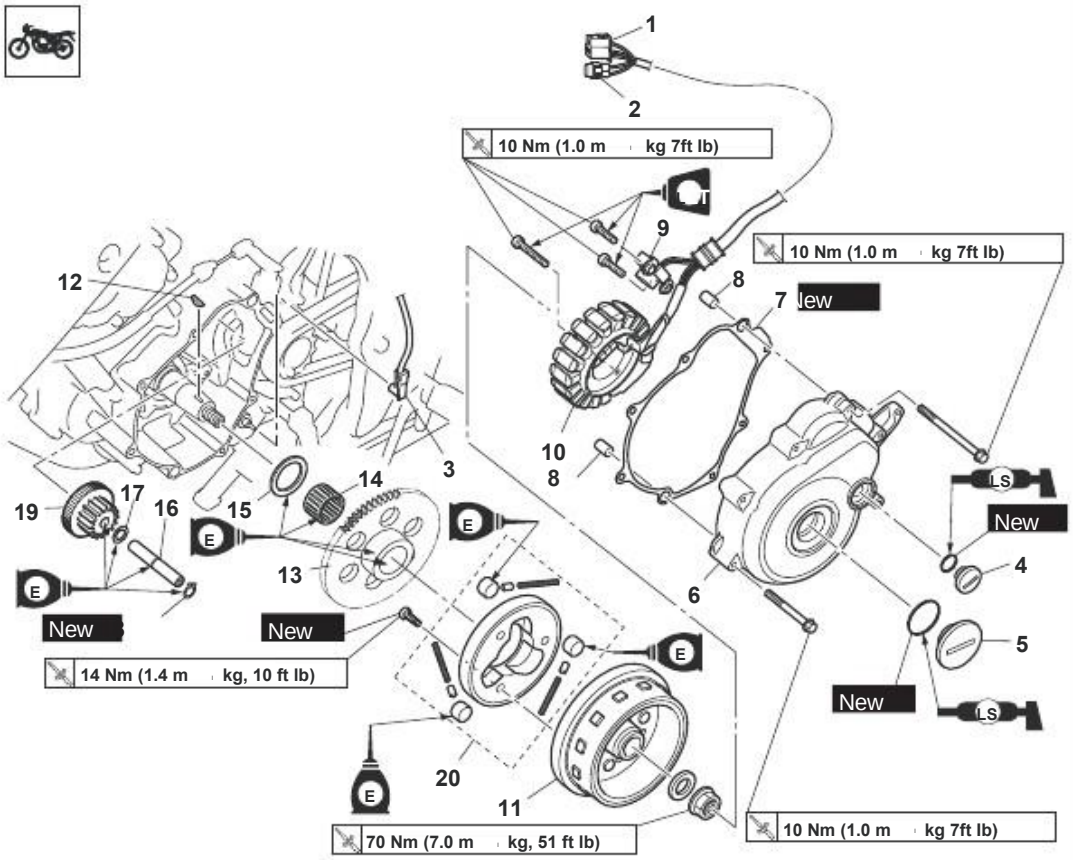

Order	Procedure / Parts to remove	Amount	Observations
	Motor oil		Drain See "OIL CHANGE MOTOR "on page 3-9
	Cover drive chain		See "CHAIN TRANSMISSION "on page 4-53 Disconnect
1	Connector on the stator coil	1	
2	Connector crankshaft position sensor	1	Disconnect
3	Cable connector Neutral switch	1	Disconnect
4	Screw access to mark time	1	
5	Access screw end of the crankshaft	1	
6	Magneto cover	1	
7	Gasket magneto cover	1	
8	Dowel pin	2	
9	Crankshaft position sensor	1	
10	Stator coil	1	
11	Magneto Rotor	1	

Downloaded from www.Manualslib.com manuals search engine

Removing the magneto and starter clutch

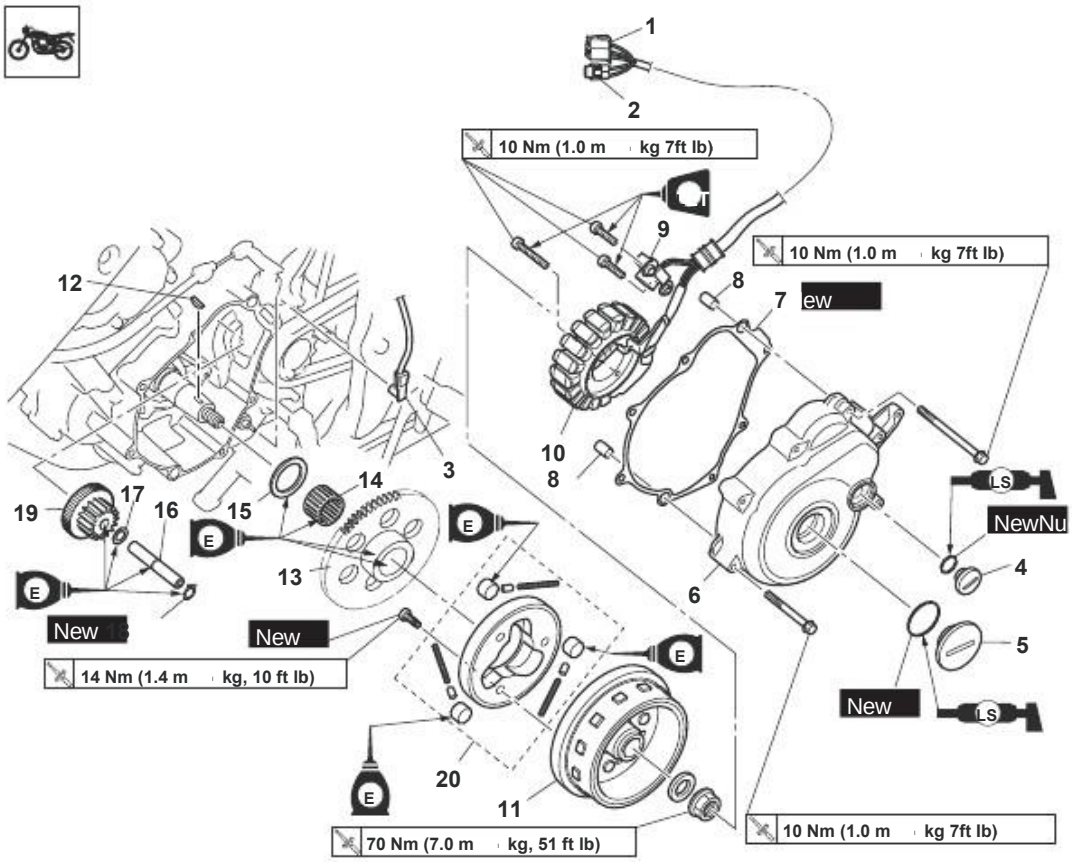

Order	Procedure / Parts to remove	Amount	Observations
12	Woodruff key	1	
13	Starter clutch sprocket	1	
14	Bearing	1	
15	Washer	1	
16	Axis of the freewheel clutch starter	1	
17	Washer	1	
18	Pin lock	1	
19	Freewheel clutch starter	1	
20	Starter clutch	1	
			For assembly, reverse the procedure disassembly.

Downloaded from www.Manualslib.com manuals search engine

MAGNET REMOVAL

1. Remove:
 •Magneto rotor nut
 •Washer

NOTE:

•While holding the rotor magnet using the rotor magnet holder "1", loosen the magneto rotor nut.

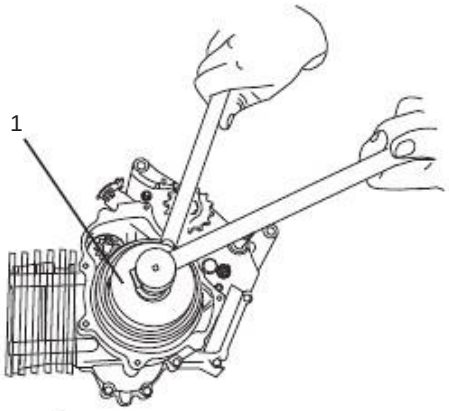

Magnet holder
YSST-601B

2. Remove:
 •Magnet rotor "1"
  (With the extractor magnet "2")
 •Woodruff key

CAUTION

To protect the end of the crankshaft, place a key of suitable size between the extractor magnet and the crankshaft.

NOTE:

Make sure the exhaust is magneto centered over the rotor magnet.

Magneto Puller
YSST-628

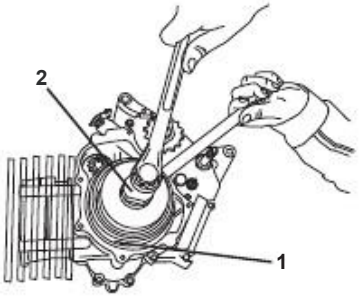

REMOVING THE STARTER CLUTCH

1. Remove:
 •Starter clutch bolts "1"

NOTE:

•While holding the rotor magnet with magnet holder, remove the screws starter clutch "1"

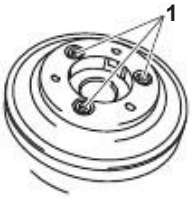

CHECKING THE STARTER CLUTCH

1. Check:
 •The starter clutch rollers "1"
 •Covers engine clutch spring boot "2"
 •Spring clutch motor start "3"
  Damage / wear Replace the clutch boot.

Downloaded from www.Manualslib.com manuals search engine

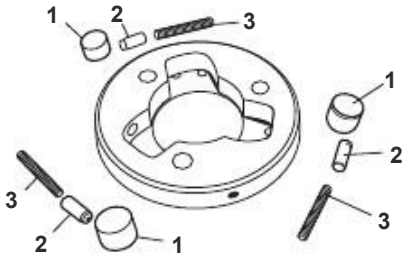

2. Check:
•Freewheel clutch start
•Starter clutch sprocket
Burrs / chips / roughness Replace defective parts.
3. Check:
•Contact surfaces of the clutch
Boot Damage / pitting / wear
Replace the clutch gear boot.
4. Check:
•Starter clutch operation

a. Install the starter clutch gear "1" in the starter clutch and hold the rotor rotor magnet.
b. By turning the starter clutch sprocket in clockwise "A", the starter clutch and the starter clutch gear must be engage, otherwise the starter clutch is defective and must be replaced.
c. By turning the starter clutch gear counter-clockwise "B", should turn freely, otherwise the starter clutch is faulty and must be replaced.

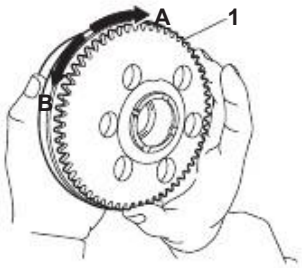

STARTING CLUTCH ASSEMBLY
1. Install:
• Start Clutch
• starter clutch bolts "1"

	Starter clutch bolts **14 Nm (1.4 m · kg, 10 ft · lb)**

NOTE:
• While holding the rotor magnet, tighten the starter clutch "1".
• Mark the end "A" of each screw starter clutch.

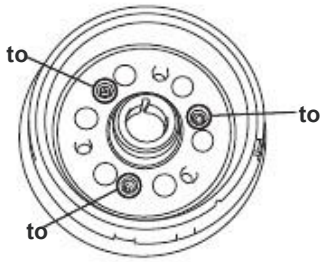

MOUNTING MAGNETO
1. Install:
• woodruff key
• Rotor magnet rotor
• Washer
• magneto rotor nut

NOTE:
•Clean the tapered crankshaft and the axis of magnet rotor.
•When installing the magneto rotor, make sure that the woodruff key is properly seated in the groove of the crankshaft.

2. Press:
•Magneto rotor nut "1"

	Magneto rotor nut **70 Nm (7.0 m · kg, 50 ft · lb)**

Downloaded from www.Manualslib.com manuals search engine

NOTE:

• While holding the rotor magnet "2", tighten the magneto rotor nut "1".

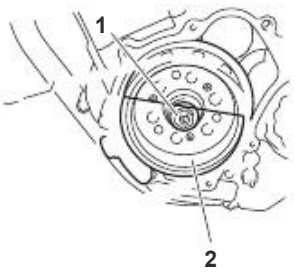

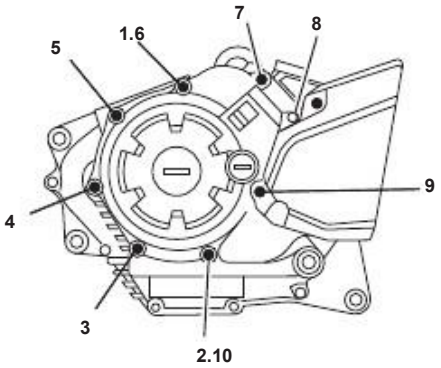

3. Apply:
•Sealant
(In the crankshaft position sensor / in eyelet for mounting the stator wire)

	Yamaha Adhesive No. 1215 **TG-1215**

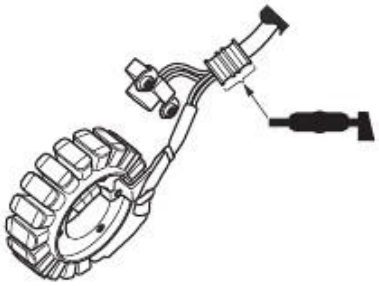

4. Install:
• Cover the magnet

	Magneto cover screw **10 Nm (1.0 m · kg, 7.2 ft · lb)**

NOTE:

Tighten the screws on the magneto cover proper tightening sequence as shown.

Downloaded from www.Manualslib.com manuals search engine

ELECTRIC START

Removing the starter motor

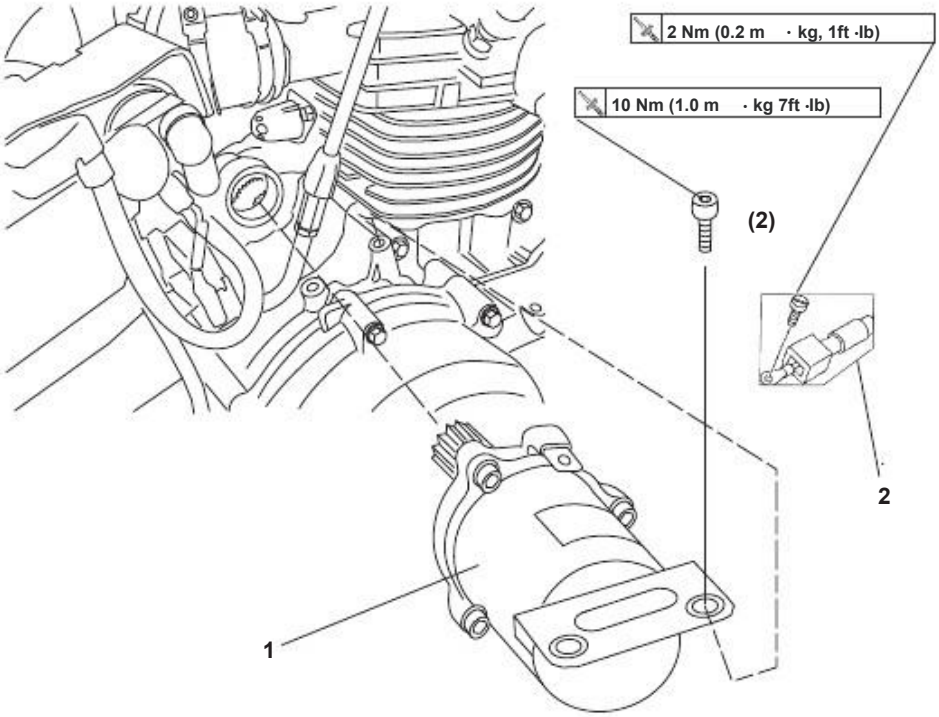

Order	Procedure / Parts to remove	Amount	Observations
1	Starter	1	
2	Starter Cable	1	Disconnect
			For assembly, reverse the procedure disassembly.

Downloaded from www.Manualslib.com manuals search engine

Disassemble the starter

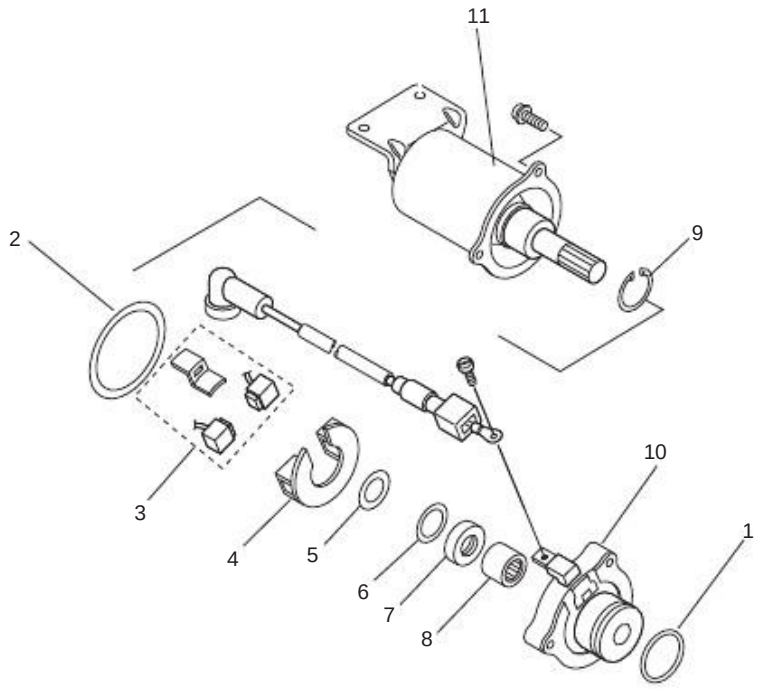

Order	Procedure / Parts to remove	Amount	Observations
1	Starter	1	
2	Cover Gasket	1	
3	Set of carbon brushes	1	
4	Support for carbon brushes	1	
5	Oil Seal	1	
6	Pin lock	1	
7	Stop washer	1	
8	Washer	1	
9	Bearing	1	
10	Front cover of the starter	1	
11	Starter	1	
			For assembly, reverse the procedure disassembly.

Downloaded from www.Manualslib.com manuals search engine

DISASSEMBLY STARTER

1. Remove:
 •Starter "1"
 •Engine front cover
  Start / brush holder assembly "2"

NOTE:
Before disassembling the starter, make alignment marks "a" in the starter cover and front cover Starter / brush holder assembly.

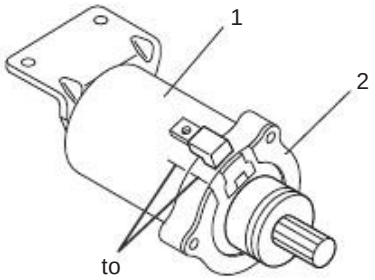

STARTER INSPECTION

1. Check:
 •Switch
  Dirty Clean with 600 grit.
2. Measure:
 •Switch diameter "a"
  Out of specification Replace starter.

	Limit **17.6 mm**

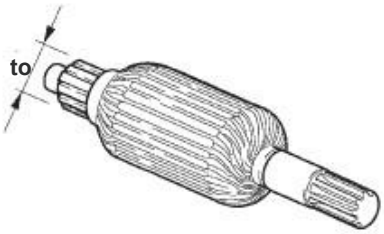

3. Measure:
 •Mica recess "a"
  Recess specification outside the mica appropriate measure with a saw blade frosted metal, until it clicks into the switch.

	Mica undercut (depth) **2.10 mm**

NOTE:
To ensure correct operation of the switch should be cut mica.

4. Measure:
 •Resistance of the armature (switch and insulation)
  Out of specification Replace motor boot.

a. Measure the resistance of the armature with multimeter.

	Multimeter

	Armature coil **Resistance of the switch "1"** **Ù 0.0315 to 0.0385 at 20 ° C (68 ° F)**

b. If the resistance is out of specification Replace the starter.

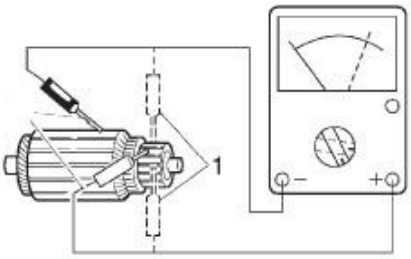

5. Measure:
 •Brush length "a"
  Replace out of specification engine front cover
  Start / brush and holder

	Length of the brushes "a" **7.5 mm** **Limit** **4.0 mm**

Downloaded from www.Manualslib.com manuals search engine

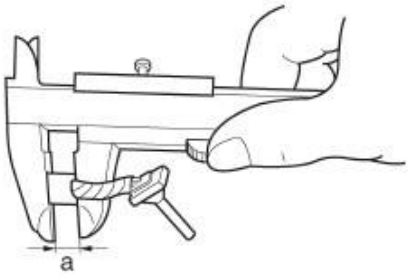

6. Check:
 •Sprocket teeth
  Damage / wear Replace the sprocket.
7. Check:
 •Bearing
 •Oil Seal
  Damage / wear Replace the cover
  starter frontal / group
  brush holder

STARTER ASSEMBLY

1. Install:
 •Front cover of the starter /
  brush support assembly "1"
 •Cover starter "2"

NOTE:

Align the marks "a" in the hood
starter and engine front cover
start / support assembly.

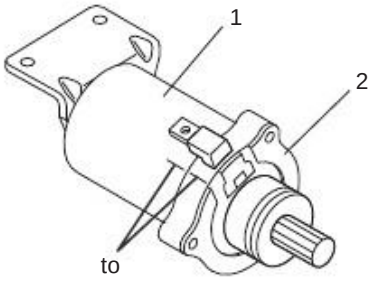

Downloaded from www.Manualslib.com manuals search engine

CLUTCH

Removing the clutch cover

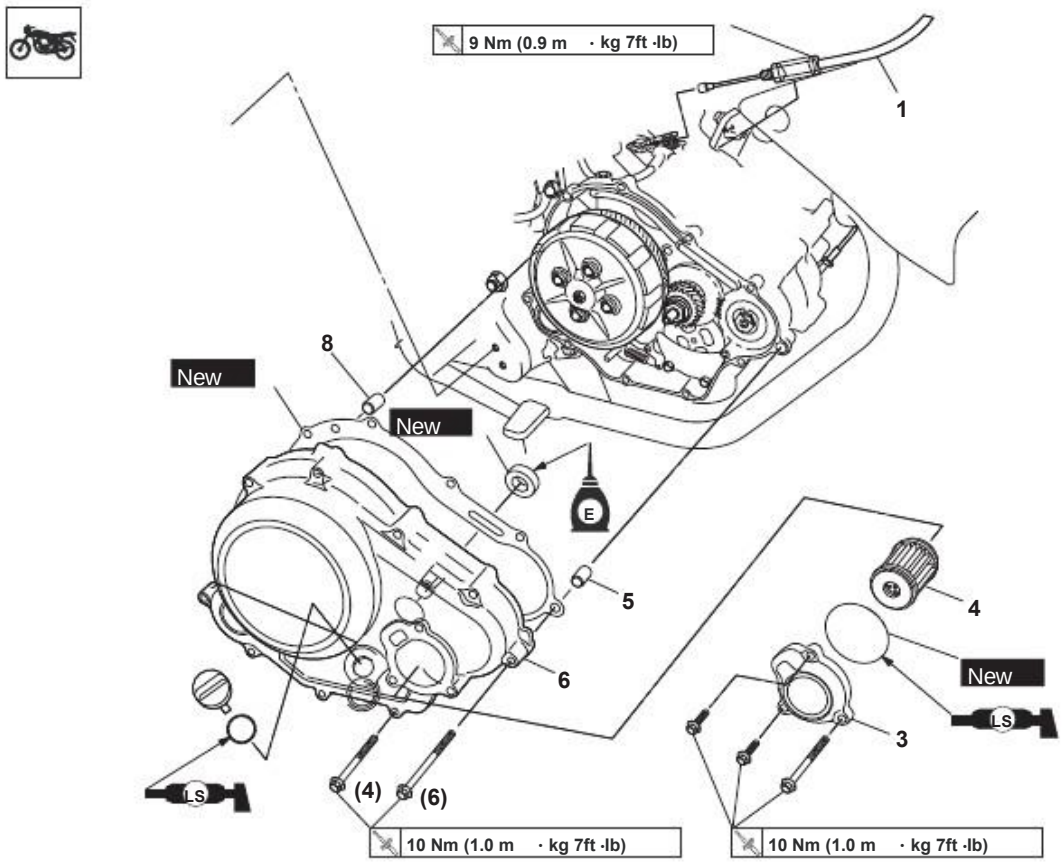

Order	Procedure / Parts to remove	Amount	Observations
	Motor oil		Drain See "OIL CHANGE MOTOR "on page 3-9 Disconnect
1	Clutch cable	1	
2	Oil Seal	2	
3	Oil filter cover	1	
4	Oil filter	1	
5	Dowel pin	2	
6	Clutch cover	1	
7	Cover gasket Clutch	1	
			For assembly, reverse the procedure disassembly.

Downloaded from www.Manualslib.com manuals search engine

Removing the clutch

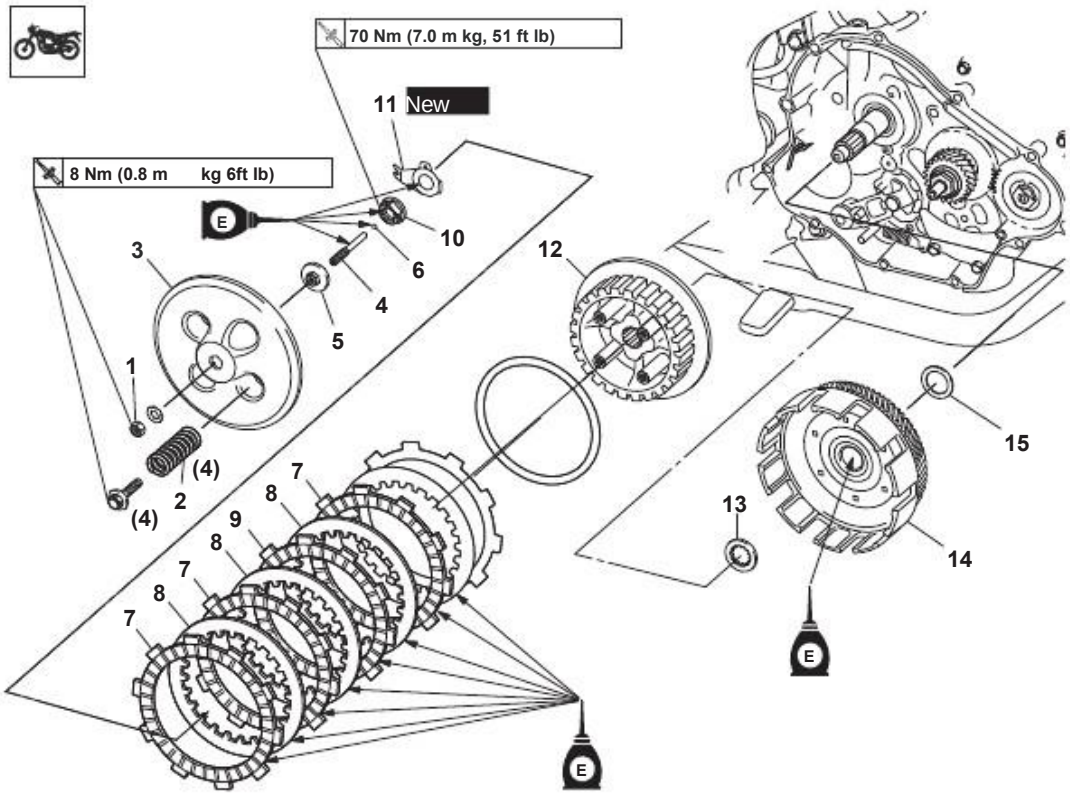

Order	Procedure / Parts to remove	Amount	Observations
1	Locknut	1	
2	Clutch spring	4	
3	Pressure Plate	1	
4	Short rod Clutch thrust	1	
5	Holder of the clutch pushrod	1	
6	Ball	1	
7	Friction disc 1	2	
8	Clutch disc	3	
9	Friction Disc 2	2	
10	Nut disc holder	1	
11	Lockwasher	1	
12	Disc holder	1	
13	Thrust Washer	1	
14	Clutch	1	
15	Conical spring washer	1	
			For assembly, reverse the procedure disassembly.

Downloaded from www.Manualslib.com manuals search engine

Removing the push lever

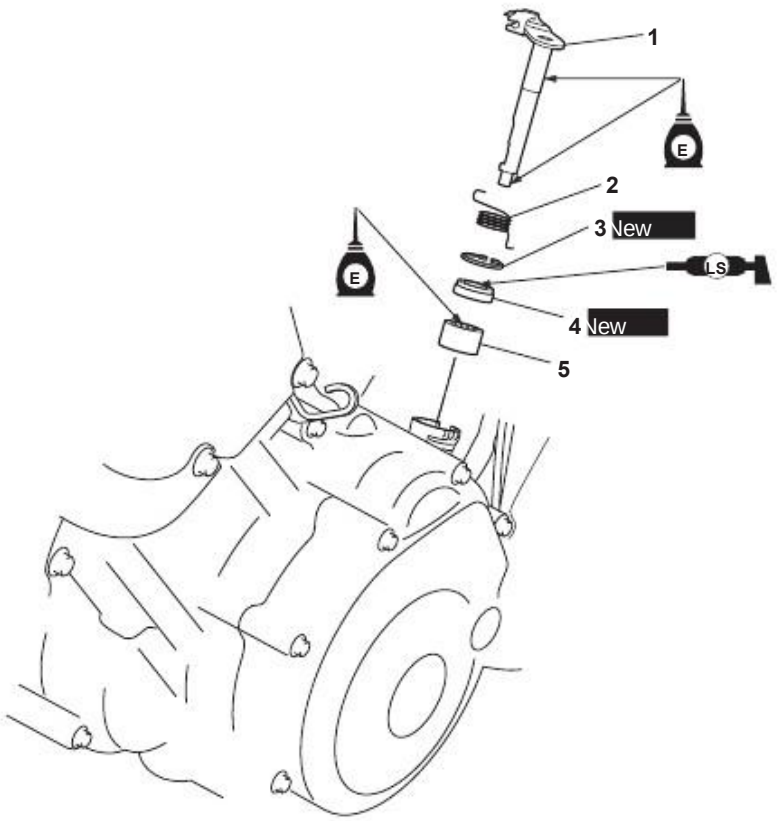

Order	Procedure / Parts to remove	Amount	Observations
	Clutch		Refer to "CLUTCH" on page 5-35
1	Push the clutch lever	1	
2	Spring clutch push lever	1	
3	Pin lock	1	
4	Oil Seal	1	
5	Bearing	1	
			For assembly, reverse the procedure disassembly.

Downloaded from www.Manualslib.com manuals search engine

REMOVING THE CLUTCH

1. Straighten the lock washer.
2. Loosen:
 •The nut of the clutch disc carrier "1"

NOTE:

While holding the clutch disc carrier "2" with the clutch fastener "3", loosen the Clutch cutterbar nut.

Clutch retainer
YSST-733

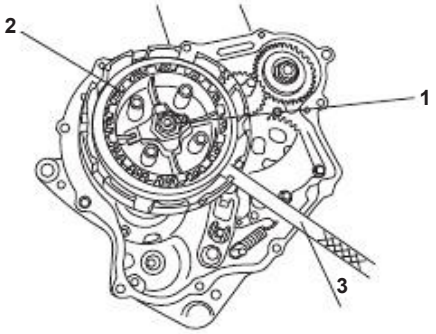

INSPECTION OF RECORDS OF FRICTION

The following procedure applies to all friction discs.

1. Check:
 •Friction disc
 Damage / wear Replace discs friction as a whole.
2. 2. Measure:
 •Thickness of the friction discs
 Out of specification Replace friction discs as a whole.

NOTE:

Measure the friction discs in four places.

Thickness of the friction discs
1 & 2
2.90-3.10 mm
Wear limit
2.80 mm

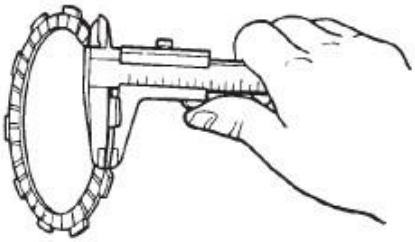

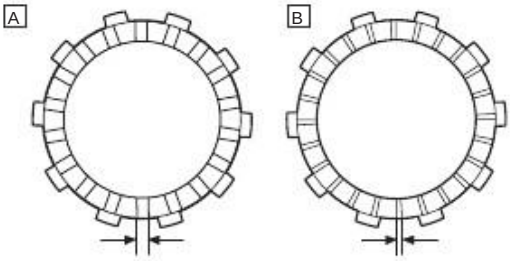

X And

A. Friction disc 1
B. B. Friction Disc 2

X = The space between the coating material friction in the friction disc 1.
Y = The space between the coating material friction in the friction disc 2.

NOTE:

The space X must be less than the space Y Friction disk 1 and the friction disc 2, respectively.

INSPECTION OF CLUTCH DISCS

The following procedure applies to all clutch discs.

1. Check:
 •Clutch disc
 Damage / wear Replace discs clutch as a whole.
2. Measure:
 •Deformation of the clutch plates (With a plate surface and meter thickness "1") Out of specification Replace the clutch plates as a set

Downloaded from www.Manualslib.com manuals search engine

Thickness of clutch discs
1.85-2.15 mm
Limit deformation
0.20 mm

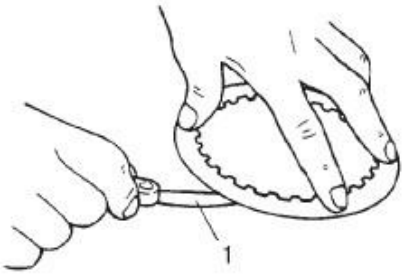

INSPECTION OF SPRINGS CLUTCH

The following procedure applies to all clutch springs.

1. Check:
   •Clutch springs
   Replace damaged clutch springs as a set

2. Measure:
   •Free length of the clutch springs "a"
   EspecificaciónReemplace outside the clutch springs as a whole

Free length of the springs clutch
41.60 mm
Minimum length
40.60 mm

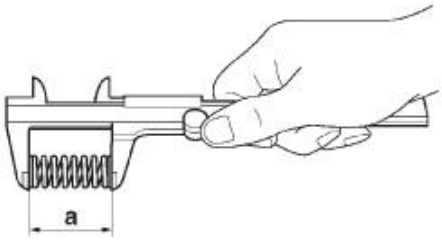

INSPECTION OF THE HOOD CLUTCH

1. Check:
   •Lace the clutch "1"
   Damage / pitting / wear Deburring lace of the clutch or replace the clutch.

NOTE:

Pitting in lace bell
will cause erratic clutch operation
clutch.

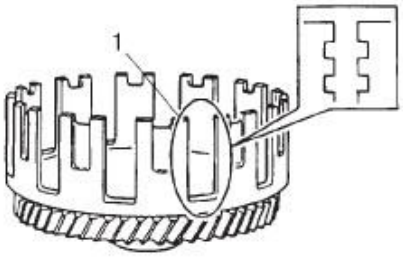

2. Check:
   •Bearing
   Damage / wear Replace the bearing and the clutch.

INSPECTION OF caddy CLUTCH

1. Check:
   •Lace Clutch cutterbar of
   Damage / pitting / wear Replace the clutch disc carrier.

NOTE:

Pitting in the lace of the disc holder
will cause erratic clutch operation
clutch.

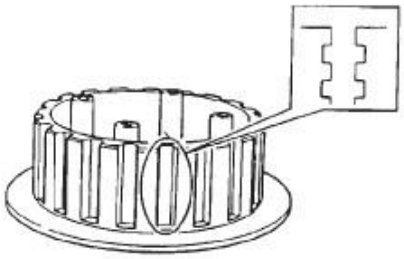

INSPECTION OF PRESSURE PLATE

1. Check:
   •Pressure Plate
   Cracks / damage Replace the plate pressure.

INSPECTION OF GEAR DRIVE PRIMARY

1. Check:
   •Pressure Plate
   •Cracks / damage Replace the plate pressure.

INSPECTION OF GEAR DRIVE PRIMARY

1. Remove:
   •Primary drive gear
   See "THE BALANCER GEAR" on page 5-49.

Downloaded from www.Manualslib.com manuals search engine

2. Check:
•Primary drive gear
Damage / wear Replace gear primary drive and clutch as a whole.
Excessive noise during operation Replace the primary drive gear and the clutch as a whole.

3. Install:
•Primary drive gear
See "PINION BALANCER "on page 5-49.

DRIVEN GEAR INSPECTION PRIMARY

1. Check:
•Primary driven gear "1"
Damage / wear Replace gear primary drive and clutch as a whole. Excessive noise during Replace drive gear operation primary and clutch as a whole.

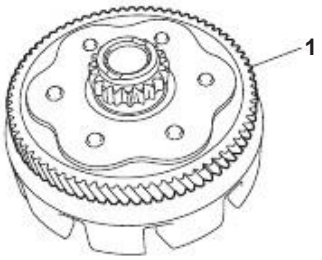

CLUTCH ASSEMBLY

1. Install:
•Conical spring washer "1"

NOTE:

Install the conical washer, as shown in the illustration.

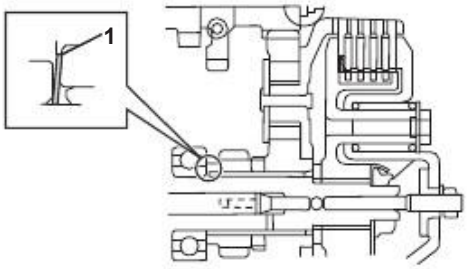

2. Install:
•Clutch Bell
•Thrust Washer "1"

NOTE:

Make sure the corners with sharp edges thrust washer "a" is placed opposite the clutch disc carrier.

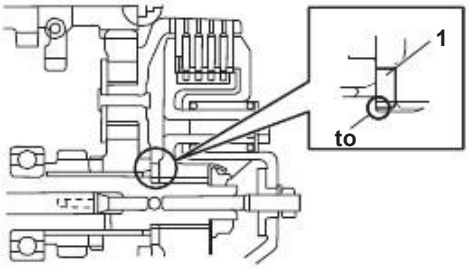

3. Install:
•Clutch cutterbar "1"
• Lock washer "2"
• Nut caddy

NOTE:

•Lubricate the threads of the nut caddy clutch and the contacting surfaces of lock washer with motor oil.
•Align the notch "a" in the washer security with a lower rib "b" in the Clutch cutterbar.

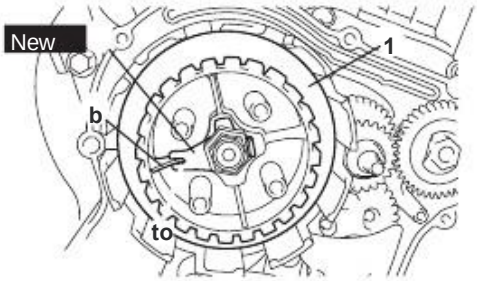

4. Press:
• Clutch cutterbar nut "1"

	Nut Clutch cutterbar **70 Nm (7.0 m · kg, 50 ft · lb)**

NOTE:

While holding the clutch disc carrier "2" with the clutch fastener "3", press the Clutch cutterbar nut.

	Clutch retainer **YSST-733**

Downloaded from www.Manualslib.com manuals search engine

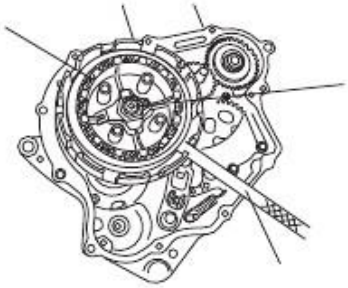

5. Bend the tab washer
along a flat side of the nut.
6. Lubricate:
•Friction discs
•Clutch discs
(With the recommended lubricant)

	Recommended lubricant **Engine Oil**

7. Install:
• Seat cushion spring
clutch "1"
• clutch damper spring "2"
• friction discs 2
• Clutch discs
• friction discs 1

NOTE:
• Install the spring seat cushion
clutch and spring damper
clutch as shown in the illustration.
First, install a friction disc and •
then switch between a clutch plate and a
friction disc.

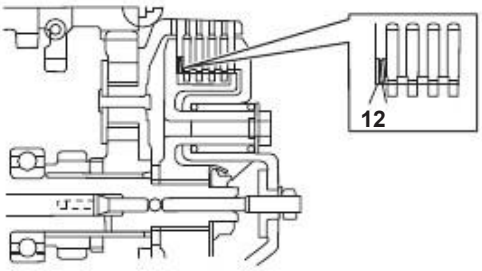

8. Install:
• Pressure Plate
• Clutch Springs "1"
• Screw clutch springs "2"

	Springs screws **clutch** **8 Nm (0.8 m · kg, 6 ft · lb)**

NOTE:
Tighten the clutch springs
in stages and in a cross pattern.

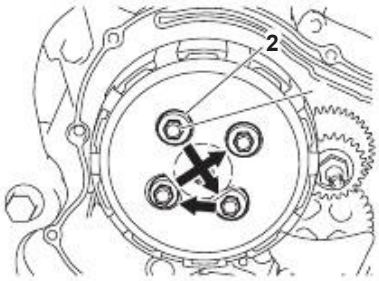

9. Fit:
•Free play of the clutch mechanism

a. Verify that the projection "a" in the lever
Clutch "1" is aligned with the mark "b"
shown in Figure crankcase
pushing the push lever clutch
manually in the direction "c" until
stops.

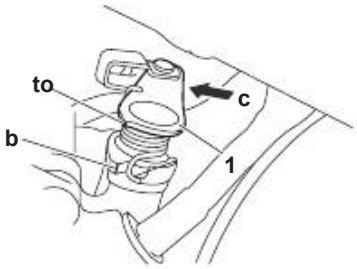

b. If the projection "a" is not aligned with the
brand name "b", align follows:
•Loosen the lock nut "2".
•With the push lever clutch
completely pushed in the direction "c",
rotate the push rod clutch short
"3" inward or outward until the
projection "a" is aligned with the mark "b".
•Hold the short rod thrust
clutch to prevent movement and torque
nut to specification.

	Nut (short rod **Clutch thrust)** **8 Nm (0.8 m · kg, 5.8 ft · lb)**

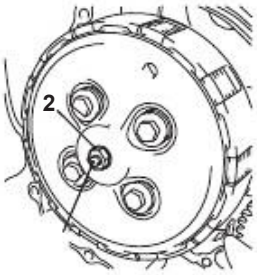

Downloaded from www.Manualslib.com manuals search engine

10. Install:
- Oil Seal "1"
- Oil Seal "2"

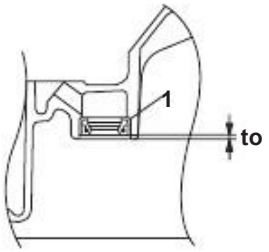

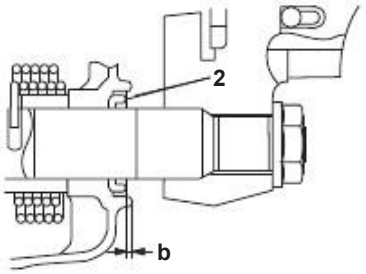

11. Install:
- Clutch cover

	Clutch cover screw **10 Nm (1.0 m · kg, 7.2 ft · lb)**

NOTE:
Tighten the the cover screws
clutch in proper tightening sequence
as shown.

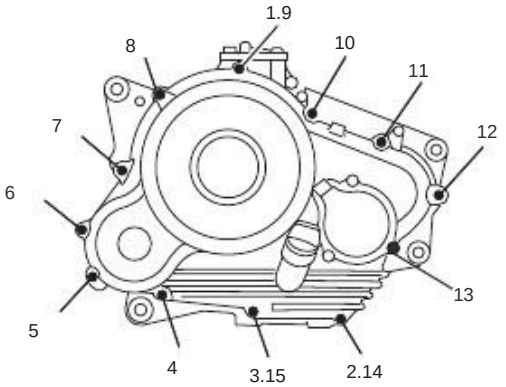

13. Fit:
- Set the clutch cable free
  Refer to "ADJUSTING THE GAME
  CLUTCH CABLE FREE "on
  page 3-10.

Downloaded from www.Manualslib.com manuals search engine

OIL PUMP

Removing the oil pump

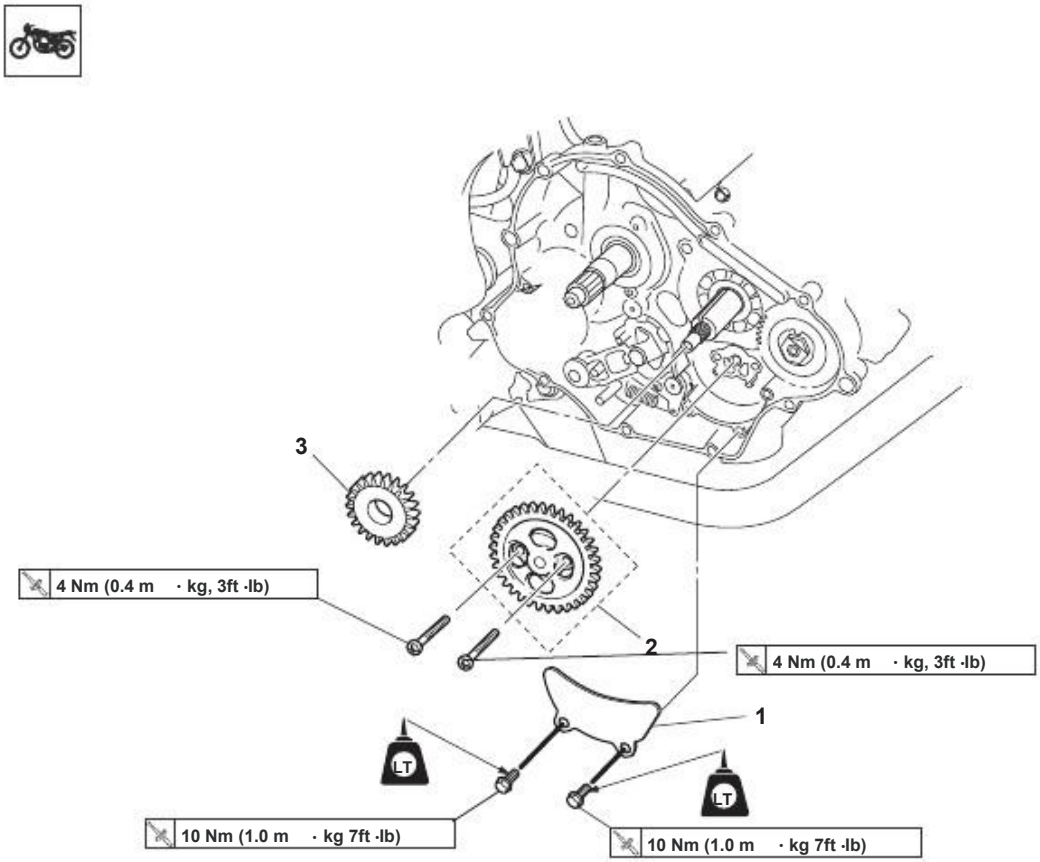

Order	Procedure / Parts to remove	Amount	Observations
	Clutch		Refer to "CLUTCH" on page 5-35
	Primary drive gear / pinion balancer		See "PINION BALANCER "on page 5-49
1	Oil baffle plate	1	
2	Oil pump	1	
3	Primary drive gear oil pump	1	
			For assembly, reverse the procedure disassembly.

Downloaded from www.Manualslib.com manuals search engine

Disassembly of the oil pump

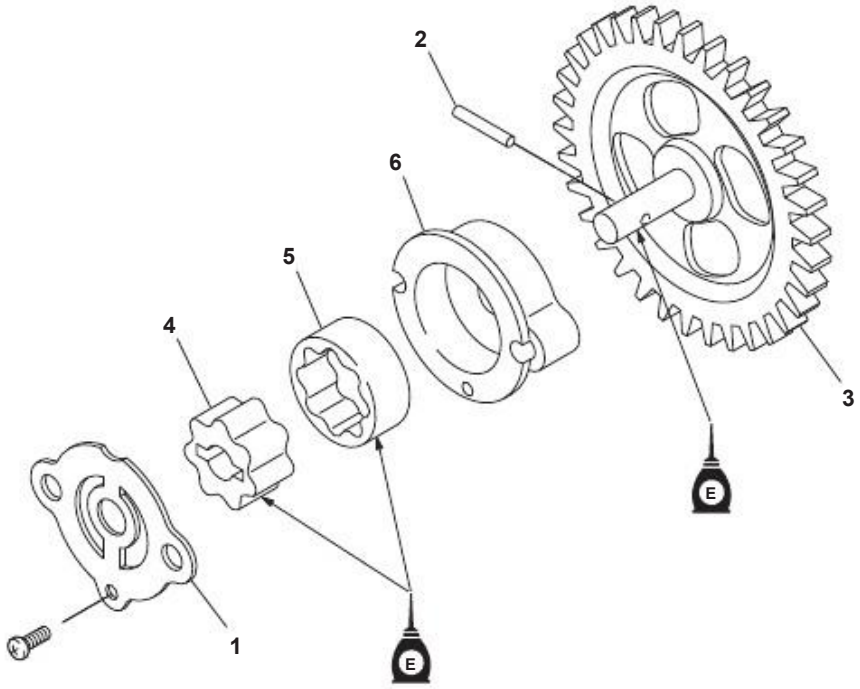

Order	Procedure / Parts to remove	Amount	Observations
1	Housing cover of the oil pump	1	
2	Pin	1	
3	Primary driven gear oil pump	1	
4	Internal rotor of the oil pump	1	
5	External rotor oil pump	1	
6	Pump housing oil	1	
			For assembly, reverse the procedure disassembly.

Downloaded from www.Manualslib.com manuals search engine

CHECKING THE OIL PUMP

1. Check:
 •Primary drive gear pump
  oil
 •Primary driven gear pump
  oil
 •Pump housing oil
  Cracks / damage / wear Replace
  defective parts.
2. Measure:
 •Clearance between the inner rotor and outer rotor "a"
 •Clearance between the outer rotor and the housing
  oil pump "b"
 •Clearance between the casing of the oil pump
  and inner and outer rotors "c".
  Out of specification Replace the pump
  oil.

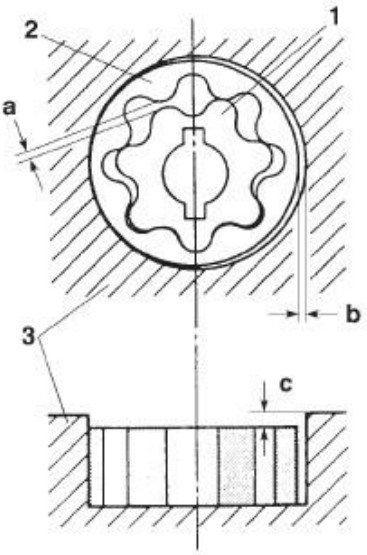

1. Internal rotor
2. External Rotor
3. Carcasa oil pump

Clearance between the inner rotor and the external rotor
Less than 0.15 mm
Limit
0.20 mm
Clearance between the outer rotor and the housing of the oil pump
0.13 to 0.19 mm
Limit
0.15 mm
Clearance between the casing oil pump and rotors internal and external
0.06 to 0.11 mm
Limit
0.15 mm

3. Check:
 • Running the pump
  Repeat steps roughly Movement (1) and
  (2) or replace the defective parts.

ASSEMBLING THE OIL PUMP

1. Lubricate:
 • Internal rotor of the oil pump
 •External rotor oil pump
 •Primary driven gear pump
  oil (With the recommended lubricant)

Recommended lubricant
Engine oil

2. Install:
 • Internal rotor of the oil pump
 • External rotor oil pump "1"
 • Primary driven gear pump
  oil
 • Pin "2"

NOTE:

When installing the inner rotor, align the pin "2" in the axis of the oil pump with the slot "a" in the inner rotor "1".

Downloaded from www.Manualslib.com manuals search engine

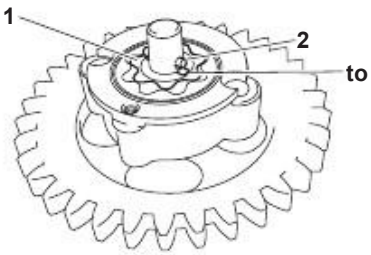

3. Check:
•Operating the oil pump

See "INSPECTION
OIL PUMP "on page 5-45.

ASSEMBLING THE OIL PUMP

1. Install:
•Oil pump

	Screw oil bulges **4 Nm (0.4 m · kg, 2.4 ft · lb)**

CAUTION

After tightening the screws, make sure that the oil pump rotates smoothly.

Downloaded from www.Manualslib.com manuals search engine

AXIS OF CHANGES

Removing the shift shaft and lever stop

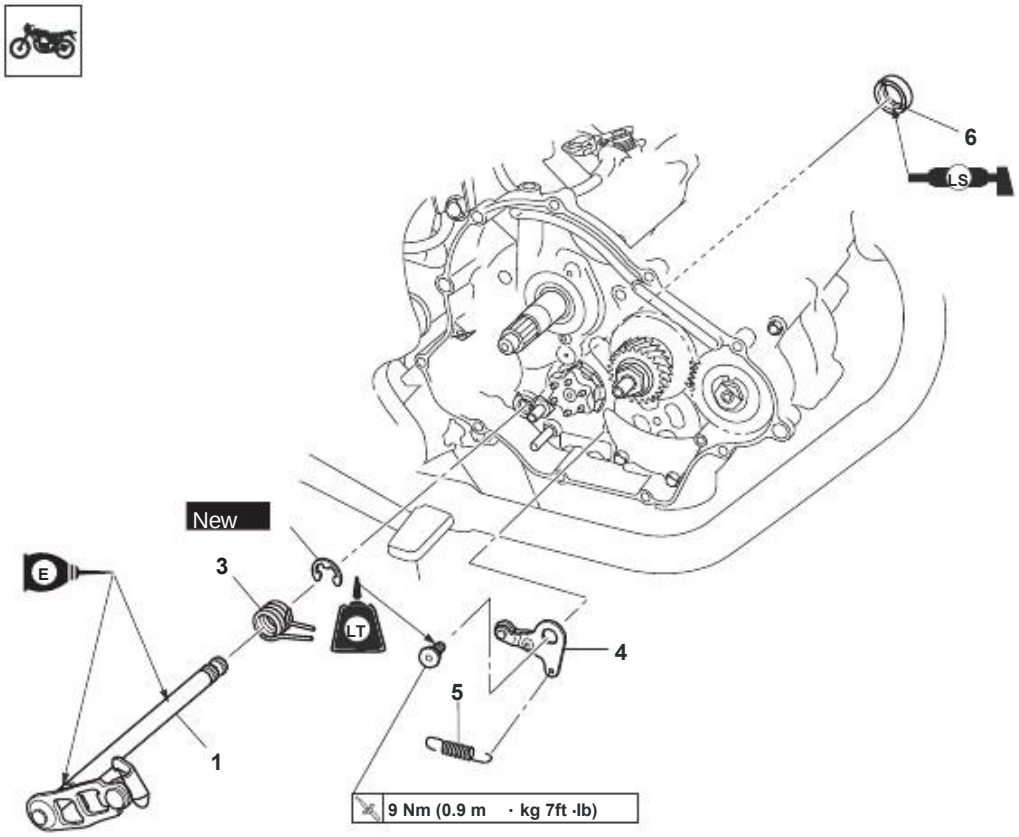

Order	Procedure / Parts to remove	Amount	Observations
	Clutch		Refer to "CLUTCH" on page 5-35
	Shift arm		
1	Axis changes	1	
2	Pin lock	1	
3	Shift shaft spring	1	
4	Lever cap	1	
5	Stop lever spring	1	
6	Oil Seal	1	
			For assembly, reverse the procedure disassembly.

Downloaded from www.Manualslib.com manuals search engine

SHAFT INSPECTION OF CHANGES

1. Check:
   - •Axis changes
     Curves / damage / wear Replace.
   - •Changes shaft spring
     Damage / wear Replace.

TOP LEVER INSPECTION

1. Check:
   - •Lever cap
     Curves / damage Replace.
     Replace harsh roller rotates the top of the lever.
   - •Stop lever spring
     Damage / wear Replace.

ASSEMBLY SHAFT CHANGES

1. Install:
   - •Top of the lever "1"
   - •Spring stop lever "2"

NOTE:

- •Hook the ends of the spring cap the lowest position of the lever and the protrusion of the cover "3".
- •Engage the top of the lever with the segment drum changes.

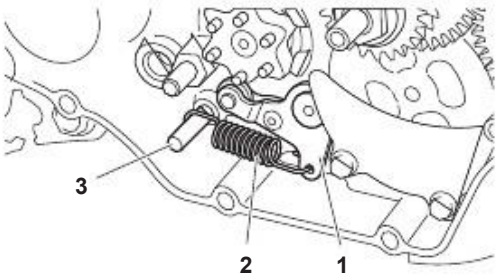

2. Install:
   - •Axis of change "1"

NOTE:

Hook the end of the shaft spring on the spring changes the top of the shaft change "2".

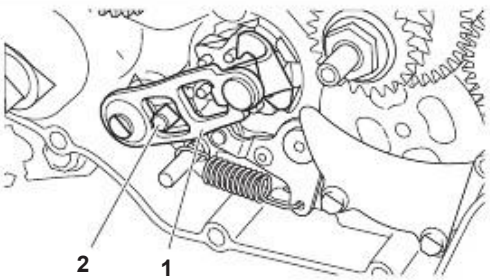

Downloaded from www.Manualslib.com manuals search engine

PINION BALANCER

Removing the sprocket and balancer primary drive gear

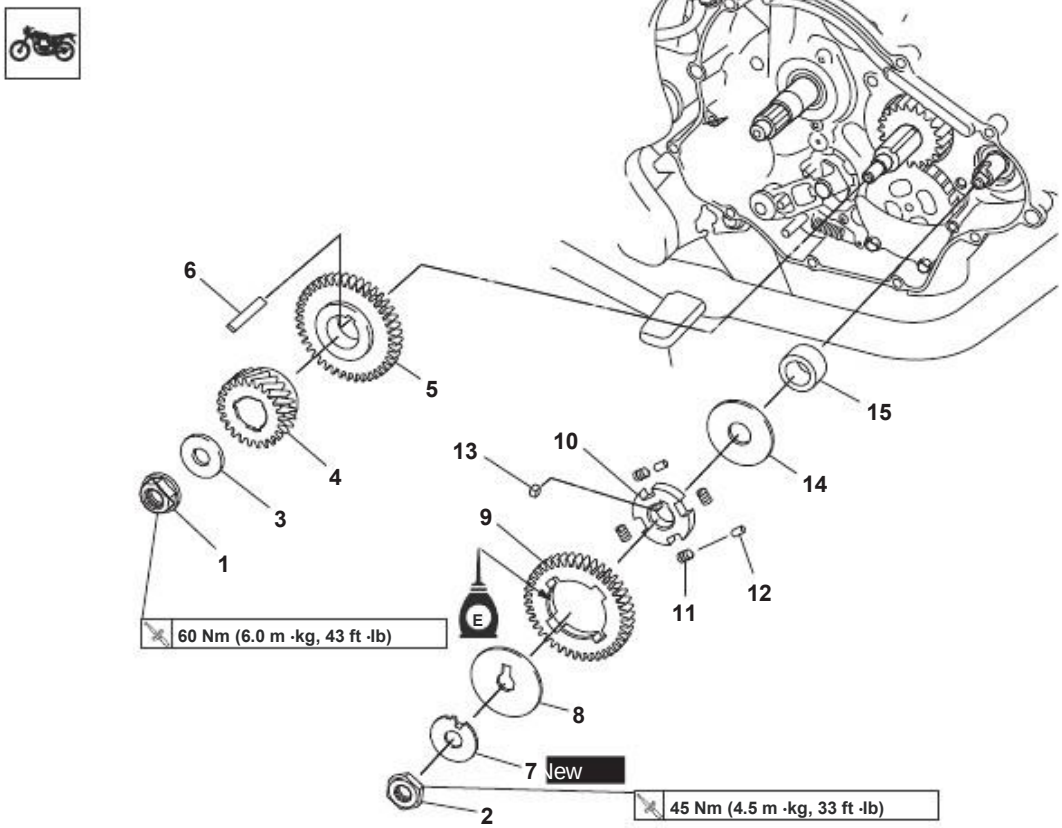

Order	Procedure / Parts to remove	Amount	Observations
	Clutch		Refer to "CLUTCH" on page 5-35
1	Primary drive gear nut	1	
2	Nut balancer drive gear	1	
3	Washer	1	
4	Primary drive gear	1	
5	Primary drive gear Balancer	1	
6	Straight key	1	
7	Lockwasher	1	
8	Plate 1 balancer driven gear	1	
9	Balancer driven gear	1	
10	Cup top	1	
11	Spring	4	
12	Dowel pin	2	
13	Straight key	1	
14	Plate 2 of the balancer driven gear	1	

Downloaded from www.Manualslib.com manuals search engine

Removing the sprocket and balancer primary drive gear

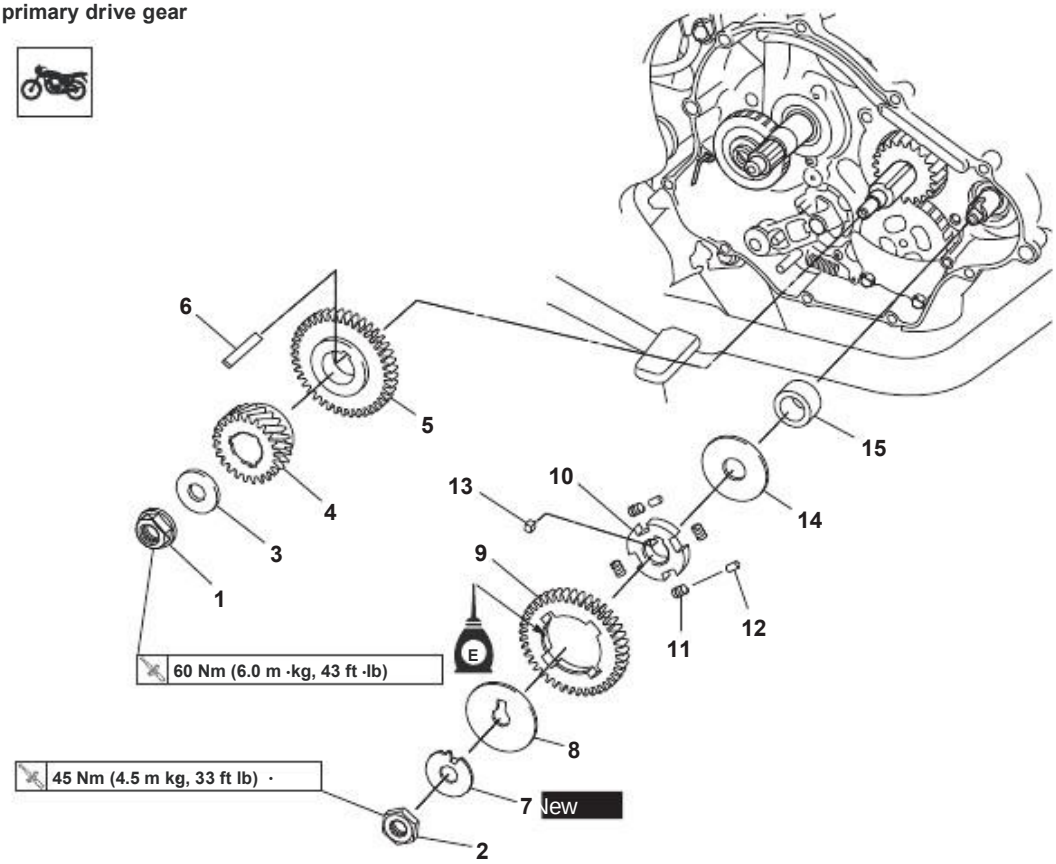

Order	Procedure / Parts to remove	Amount	Observations
15	Spacer	1	
			For assembly, reverse the procedure disassembly.

Downloaded from www.Manualslib.com manuals search engine

PINION BALANCER

1. Loosen:
•Primary drive gear nut "1"

NOTE:

Place a sheet of leather or a leather "A" between the primary drive gear balancer "2" and engranaj and led primary balancer "3", and then loosen the primary drive gear nut.

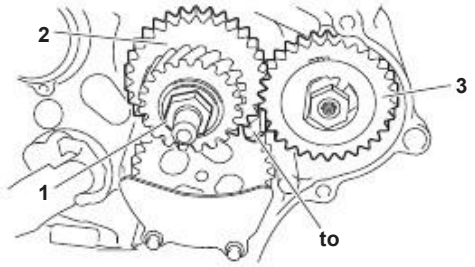

2. Straighten the lock washer.
3. Loosen:
•The primary driven gear nut balancer "1"

NOTE:

Place an aluminum plate "a" between the primary drive gear Balancer "2" and the primary driven gear Balancer "3", and then loosen the nut on the gear primary driven balancer.

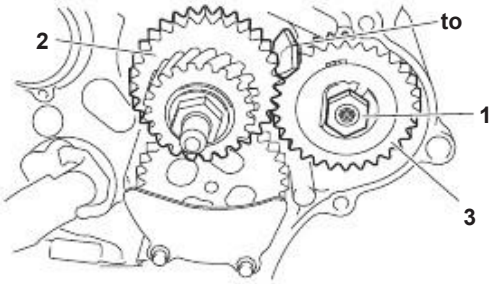

INSPECTION PINION GEARS THE BALANCER AND GEAR PRIMARY DRIVER

1. Check:
•Primary drive gear Balancer
•Primary driven gear Balancer
•Cup top
•Spring
•Dowel pin
Cracks / damage / wear Replace.
2. Check:
•Primary drive gear
See " INSPECTION PRIMARY DRIVE GEAR "In page 5-39.

DRIVEN GEAR ASSEMBLY PRIMARY BALANCER

1. Assembly:
•Pin pin "1"
•Spring "2"
(With the glass top)

NOTE:

Install the pins and springs alternatively as shown.

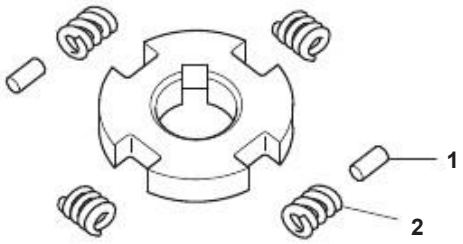

2. Assembly:
•Glass ceiling "1"
•Primary driven gear Balancer "2"

NOTE:

Align the punch mark "a" in the glass ceiling with the punch mark "b" in the gear primary driven balancer.

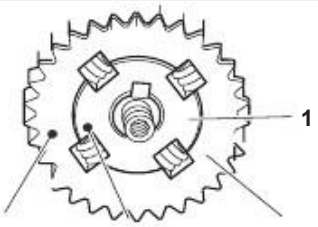

MOUNT THE GEARS BALANCER AND GEAR PRIMARY DRIVER

1. Install:
•Primary drive gear Balancer "1"
•Lockwasher
•Primary driven gear Balancer "2"
• primary driver gear
• Washer "3"
•Nut primary driven gear balancer
Primary drive gear nut•

NOTE:

•Align the punch mark "a" in the gear primary driver of the balancer with the brand Punch "b" in the primary driven gear balancer "1".
•Make sure the corners with sharp edges of the thrust washer "c" is placed next opposite the primary drive gear.

Downloaded from www.Manualslib.com manuals search engine

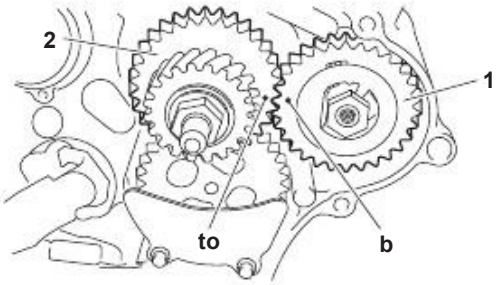

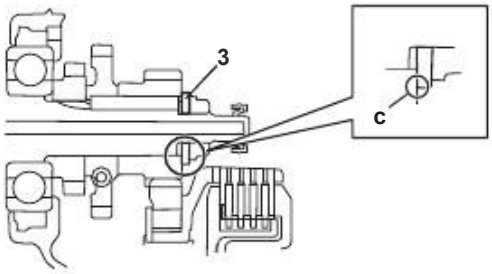

2. Press:
- Nut primary driven gear balancer "1"
- Primary drive gear "2"

	Driven gear nut primary balancer 45 Nm (4.5 m · kg, 33 ft · lb) Primary drive gear 60 Nm (6.0 m · kg, 43 ft · lb)

NOTE:

- Place an aluminum plate "a" between the primary drive gear Balancer "3" and the primary driven gear Balancer "4", and then tighten the nut on the gear primary driven balancer.
- Place an aluminum plate "b" between the primary drive gear Balancer "3" and the primary driven gear Balancer "4", and then tighten the nut on the gear primary driven balancer.

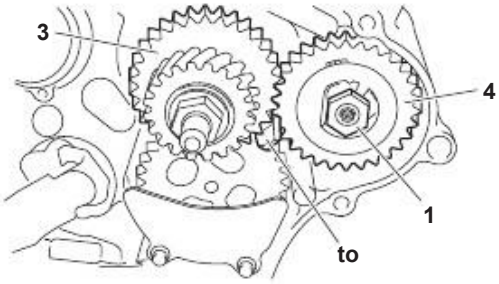

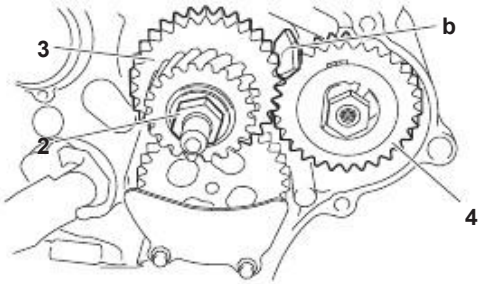

3. Bend the tab washer along a flat side of the nut.

Downloaded from www.Manualslib.com manuals search engine

CARTER

Separation of the crankcase

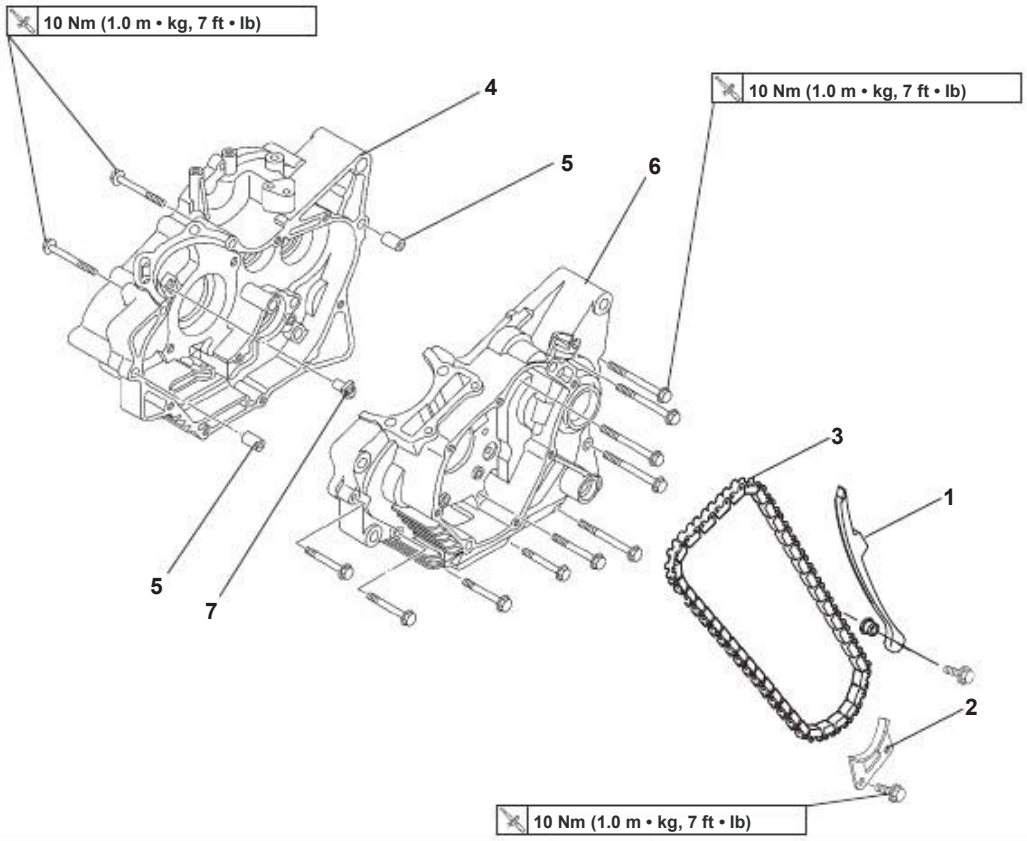

Order	Procedure / Parts to remove	Amount	Observations
	Engine		
	Head		See the "HEAD" on page 5-5
	Cylinder and piston		Refer to "CYLINDER AND PISTON" on page 5-21
	Clutch Bell		Refer to "CLUTCH" on page 5-35
	Oil pump		Refer to "OIL PUMP" on page 5-43
	Axis changes		Refer to "SHIFT SHAFT" on page 5-47
	Electric Start		See "ELECTRIC START" on page 5-31
	Balancer sprockets		See "PINION BALANCER "on page 5-49
	Magneto		See "MAGNETO AND CLUTCH THE START "on page 5-26
1	Guide the distribution chain (side inlet)	1	
2	Chain cover	1	
3	Supply Chain	1	
4	Housing right	1	

Downloaded from www.Manualslib.com manuals search engine

Separation of the crankcase

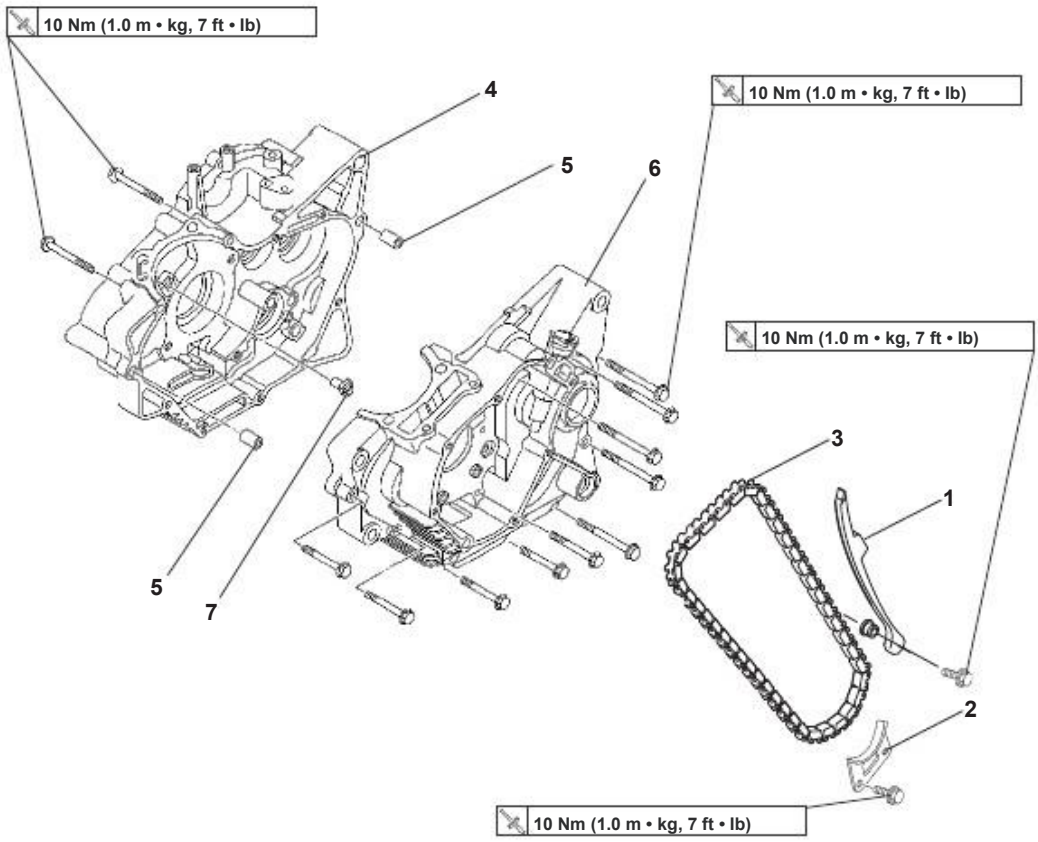

Order	Procedure / Parts to remove	Amount	Observations
5	Dowel pin	2	
6	Casing left	1	
7	Nozzle	1	
			For assembly, reverse the procedure disassembly.

Downloaded from www.Manualslib.com manuals search engine

Dismantling of bearings and oil seals

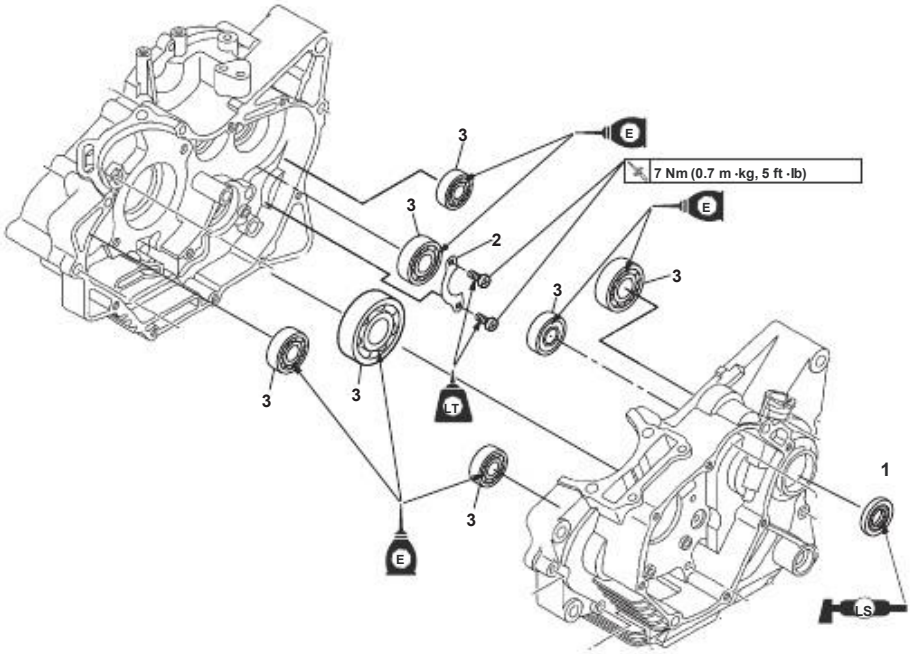

Order	Procedure / Parts to remove	Amount	Observations
	Crankshaft / Balancer		Refer to "CRANKSHAFT" on page 5-58
	Transmission		Refer to "TRANSMISSION" on page 5-61
1	Oil Seal	1	
2	Bearing retainer	1	
3	Bearing	7	
			For assembly, reverse the procedure disassembly.

Downloaded from www.Manualslib.com manuals search engine

CRANKCASE SEPARATION

1. Remove:
 •Crankcase screws

NOTE:

Loosen each bolt 1/4 turn back to the stage and in the correct sequence as shown.

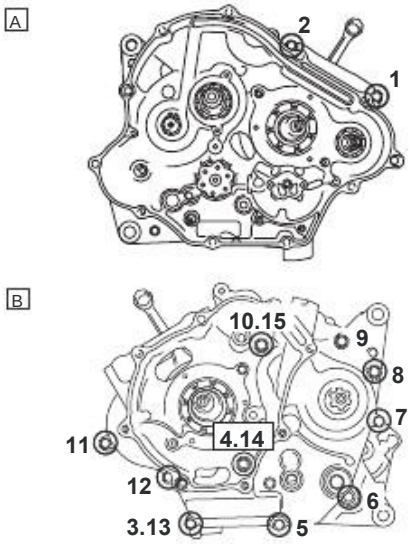

A. Housing right
B. Casing left

2. Spin:
 •Drum segment changes

NOTE:

Rotate the drum segment changes "1" to the position shown in the illustration. In this position, the teeth of the drum segment changes do not touch the crankcase for the separation of the crankcase.

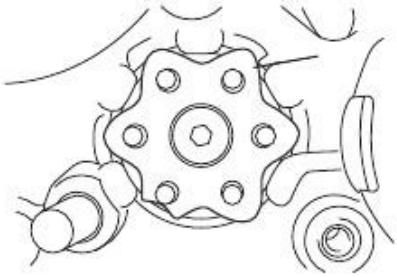

3. Remove:
 • Housing Right

CAUTION

Tapping on a side of the crankcase with a soft-faced hammer. Hit only in the reinforced portions of the sump, not on the contact surfaces crankcase. Work slowly and carefully and make sure the crankcase is separated into uniformly halves.

CRANKCASE INSPECTION

1. Thoroughly wash the halves Crankcase in a mild solvent.
2. Thoroughly clean all surfaces contact seal and the crankcase.
3. Check:
 •Sump
 Cracks / damage Replace.
 •Oil distribution passages
 Obstruction Blow out with compressed air.

INSPECTION OF THE SUPPLY CHAIN GUIDE AND CHAIN

1. Check:
 • The distribution chain
 Damage / stiffness Replace chain distribution and the camshaft sprocket as a whole.

2. Check:
 •Guide the distribution chain (Intake side)
 Damage / wear Replace.

CHECKING THE OIL STRAINER

1. Check:
 •Oil strainer
 Replace damaged.
 Pollutant Clean with solvent.

INSPECTION AND BEARING OIL SEALS

1. Check:
 •Bearings
 Clean and lubricate the bearings, then rotate the inner race with your finger

Downloaded from www.Manualslib.com manuals search engine

Replace harsh movement.
•Oil Seals
Damage / wear Replace.

BEARING RETAINER ASSEMBLY

1. Install:
•Bearing retainer "1"

NOTE:

•Install the bearing retainer "1" with the marked "OUT" "to" out.
•Apply a locking agent (LOCTITE) to screw threads of the retainer bearing.

	Bearing retainer screw **7 Nm (0.7 m · kg, 5.1 ft · lb)** **LOCTITE**

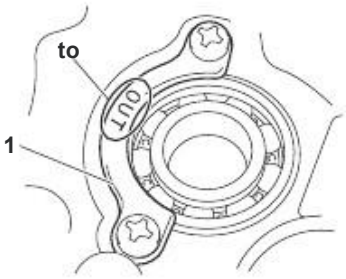

CRANKCASE ASSEMBLY

1. Thoroughly clean all surfaces contact seal and the crankcase.
2. Apply:
•Sealant
(On the contact surfaces of the housing)

	Yamaha Adhesive No. 1215

NOTE:

Do not allow product to come in contact with the oil passage.

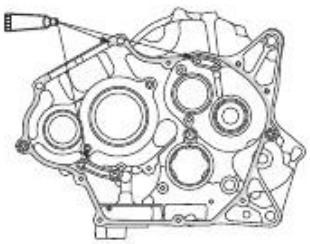

3. Install:
•Housing right

NOTE:

Rotate the drum segment changes "1" to the position shown in the illustration. In this position, the teeth of the drum segment changes do not touch the crankcase for the crankcase assembly.

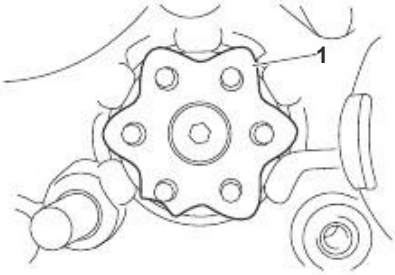

4. Install:
•Crankcase screws

	Crankcase screws **10 Nm (1.0 m · kg, 7.2 ft · lb)**

NOTE:

Tighten each screw 1/4 turn at a time stages and in the correct sequence as shown.

• M6 × 70 mm, "7-9", "11"
• M6 × 55 mm, "14", "15"
• M6 × 45 mm, "1-5", "10"

A

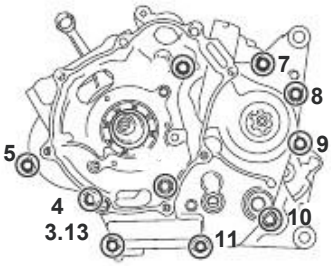

B

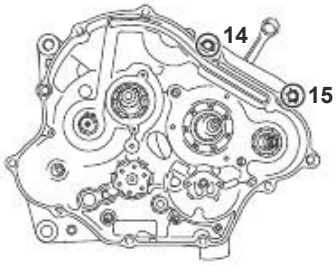

A. Casing left
B. Housing right

Downloaded from www.Manualslib.com manuals search engine

CRANKSHAFT

Removing the crankshaft and the balancer

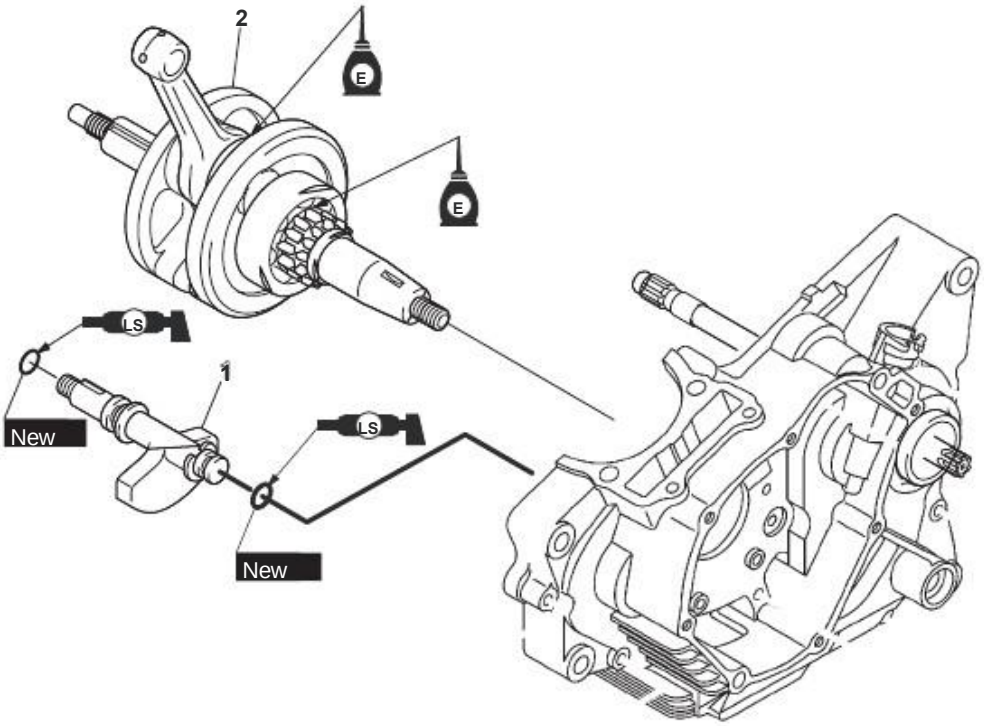

Order	Procedure / Parts to remove	Amount	Observations
	Sump		Refer to "CRANKCASE" on page 5-53
1	Balancer	1	
2	Crankshaft	1	
			For assembly, reverse the procedure disassembly.

Downloaded from www.Manualslib.com manuals search engine

REMOVING THE CRANKSHAFT

1. Remove:
•Crankshaft "1"

NOTE:

- Remove the crankshaft with the tool to remove the crankshaft "2".
- Make sure the tool to remove the crankshaft is centered on the crankshaft.

CAUTION

•To protect the end of the crankshaft, placing a key of suitable size between Tool for removing the crankshaft and crankshaft.
•Do not hit the crank.

Tool to remove the crankshaft.
YSST-265

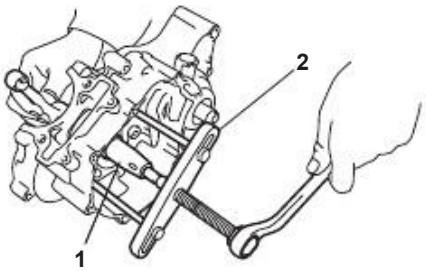

CRANKSHAFT INSPECTION

1. Measure:
•Deformation of the crankshaft
Out of specification Replace crankshaft bearing or both.

NOTE:

Slowly turn the crankshaft.

Deformation limit C
0030 mm

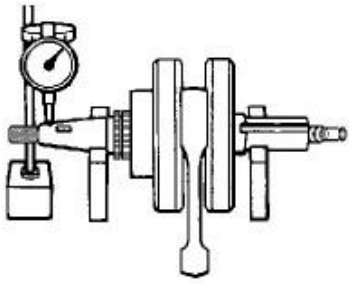

2. Measure:
•Connecting rod side clearance
Out of specification Replace the crankshaft

Connecting rod side clearance D
0110-0410 mm

3. Measure:
•Crankshaft width
Out of specification Replace the crankshaft

Crankshaft width A
47.95-48.00 mm

4. Check:
- Crankshaft Sprocket
  Damage / wear Replace the crankshaft.
- Bearing
  Cracks / damage / wear Replace the crankshaft.

5. Check:
- Support the crankshaft
  Scratches / wear Replace the crankshaft.
- Oil Passages crankshaft support
  Blow with compressed air obstructed

CRANKSHAFT ASSEMBLY

1. Install:
- Crankshaft "1"

Downloaded from www.Manualslib.com manuals search engine

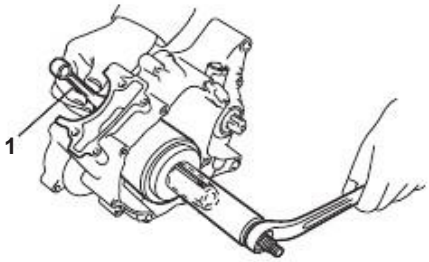

CAUTION

To avoid scratching the crankshaft and to facilitate procedure, assembly, lubricate the edges of oil seals with soap-based grease Lithium and each bearing with engine oil.

NOTE:

Keep the rod in the top dead (PMS) with one hand while turning the nut crankshaft mounting screw with the other. Turn the mounting screw of the crankshaft until the bottom of the crankshaft is against the bearing.

Downloaded from www.Manualslib.com manuals search engine

TRANSMISSION

Removing the transmission, the drum changes and changes the hairpin

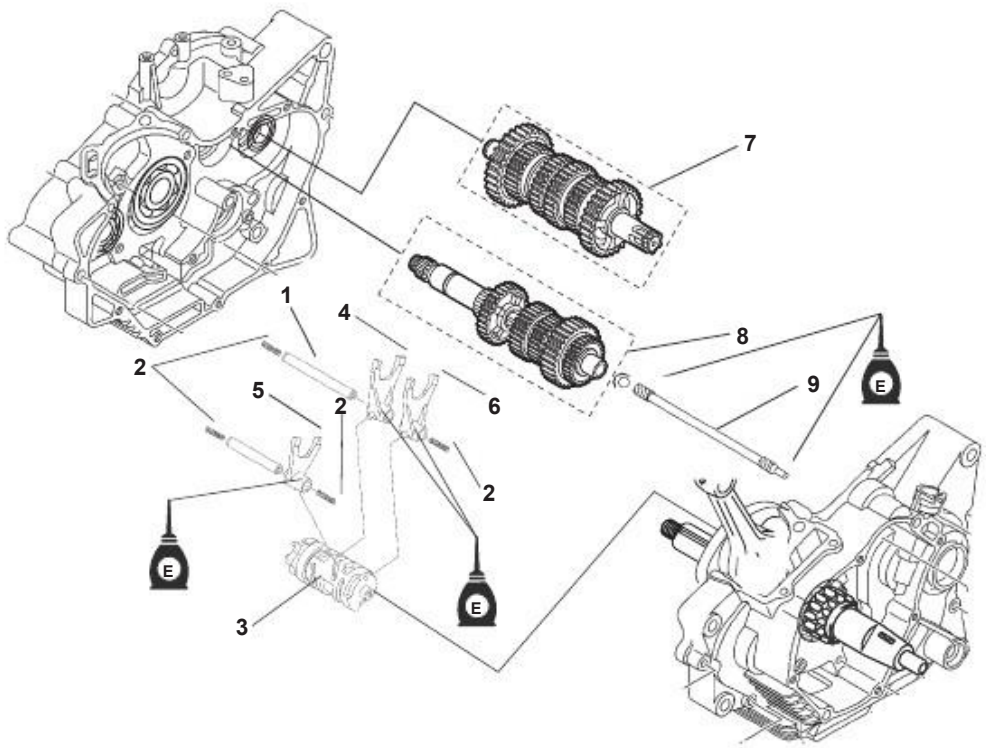

Order	Procedure / Parts to remove	Amount	Observations
	Sump		Refer to "CRANKCASE" on page 5-53
1	Guide bar claw changes	2	
2	Spring	4	
3	Shift drum	1	
4	Right-shift fork	1	
5	Shift fork-Center	1	
6	Left-shift fork	1	
7	Drive shaft	1	
8	Main shaft	1	
9	Long pushrod clutch	1	
			For assembly, reverse the procedure disassembly.

Downloaded from www.Manualslib.com manuals search engine

Disassemble the main axis

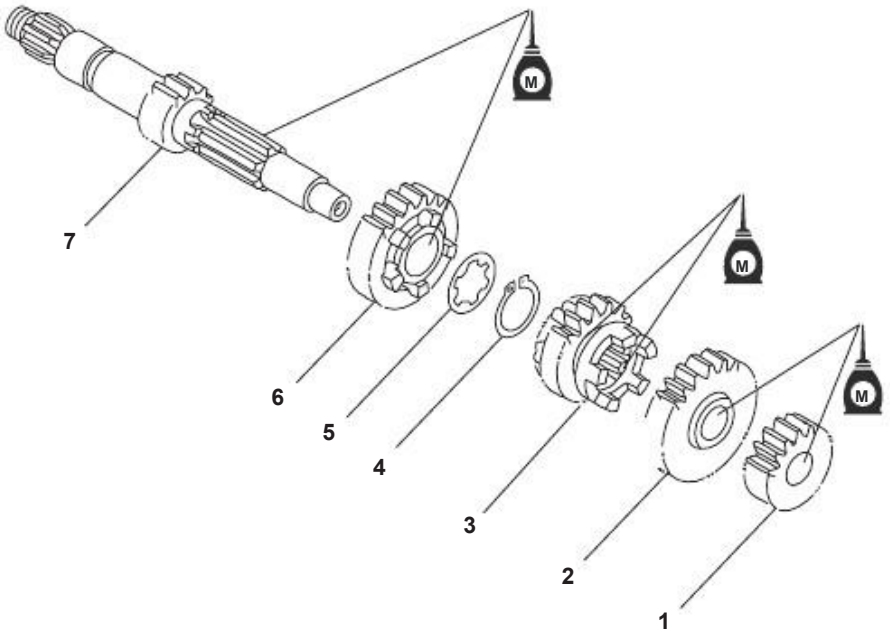

Order	Procedure / Parts to remove	Amount	Observations
1	Second pinion	1	
2	Fifth-pinion	1	
3	Third-pinion	1	
4	Pin lock	1	
5	Toothed washer	1	
6	Fourth pinion	1	
7	Main shaft / pinion first	1	
			For assembly, reverse the procedure disassembly.

Downloaded from www.Manualslib.com manuals search engine

Disassembly of the coupling pin

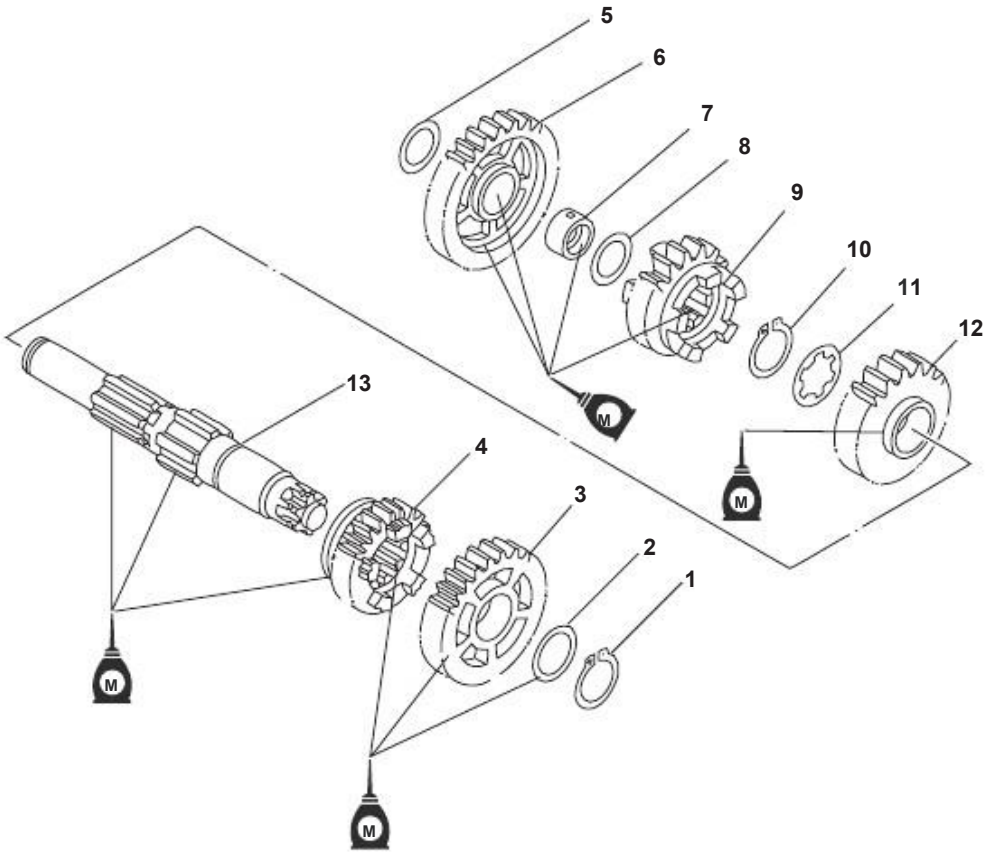

Order	Procedure / Parts to remove	Amount	Observations
1	Pin lock	1	
2	Washer	1	
3	Second Gear	1	
4	Fifth Gear	1	
5	Washer	1	
6	First gear	1	
7	Necklace	1	
8	Washer	1	
9	Fourth gear	1	
10	Pin lock	1	
11	Washer	1	
12	Third Gear	1	
13	Drive shaft	1	
			For assembly, reverse the procedure disassembly.

Downloaded from www.Manualslib.com manuals search engine

INSPECTION OF FORKS CHANGES

The following procedure applies to all changes forks.

1. Check:
   - Cam pin of the yoke of change "1"
   - Clips shift fork "2"
   - Curves / damage / stretch marks / wear Replace the fork of the changes.

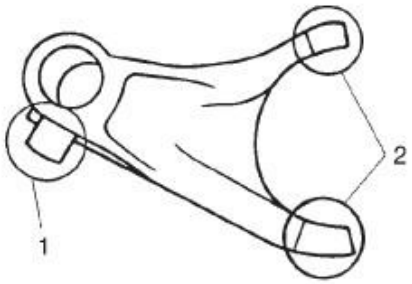

2. Check:
   - Barra fork guide changes
   Guide bar Roll the shift fork on a flat surface.
   Replace curves.

WARNING

Do not attempt to straighten a guide bar bent shift fork.

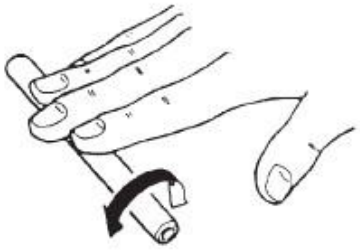

3. Check:
   - Fork movement changes
   (Moving along the guide bar of the shift fork)
   Replace harsh fork movement changes and fork guide bar changes as a whole.

INSPECTION OF CHANGE DRUM

1. Check:
   - Surcos changes in the drum
   Damage / scratches / wear Replace drum changes.
   Segment of the drum change "1"
   - Damage / wear Replace the drum the cHANGES.
   Bearing drum changes "2"
   - Damage / pitting Replace drum the cHANGES.

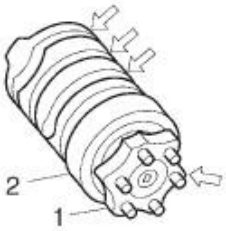

INSPECTION OF TRANSMISSION

1. Measure:
   - Deformation of the shaft main
   (With a centering device and the indicator cover of "1")
   Replace specification outside the shaft principal.

	Shaft limit deformation main 0.03 mm

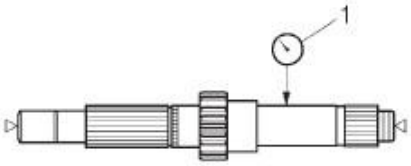

2. Measure:
   - Deformation of the coupling pin
   (With a centering device and the indicator cover of "1")
   Replace specification outside the shaft traction.

	Shaft limit deformation Traction 0.03 mm

Downloaded from www.Manualslib.com manuals search engine

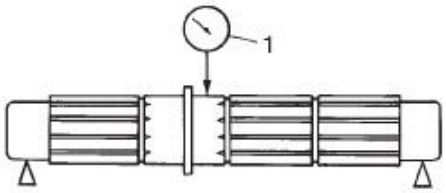

3. Check:
   Gears of workpool such knowledge within
   Blue discoloration / pitting / wear
   Replace defective gear.
   Lace gear transmission
   Cracks / damage / rounded edges
   Replace defective parts.

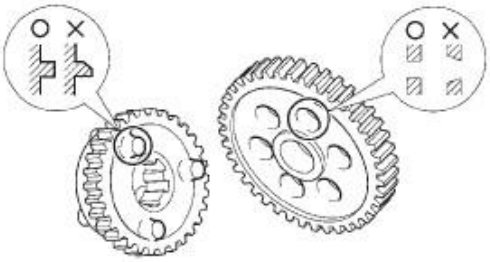

4. Check:
   Gear transmission sprockets.
   (Each sprocket wheel meshes in their respective Gear)
   Reassembly incorrect axes of the transmission
5. Check:
   Movement of transmission gears
   Replace parts coarse movement defective.

INSPECTION OF THE PUSH ROD CLUTCH

1. Check:
   Long rod Clutch thrust
   Cracks / damage / wear Replace the long rod thrust of the clutch.
2. Measure:
   Deformation limit of the push rod
   Out of specification Replace the long rod clutch thrust

	Limit flexing of the rod Thrust 0.500 mm

MAIN SHAFT ASSY, SPINDLE TRACTION

1. Install:
   Adjust dial "1"
   Pin lock "2"

NOTE:

Be sure to install the lock pin so its sharp edge "to" be back to the lock washer and gear.
Make sure the ends of the lock pin "B" are placed in the groove of the groove axis "c".

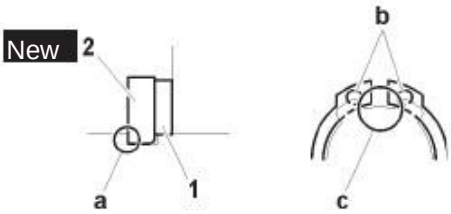

2. Install:
   Pinion second "1"

NOTE:

Press the second sprocket on the main axis "2", as shown in the illustration.

	Mounting depth "a" 106.85-107.05 mm

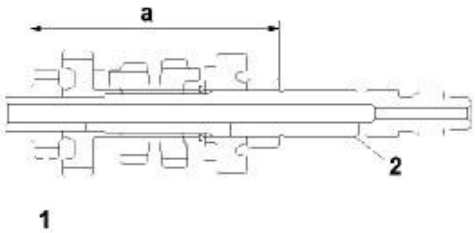

ASSEMBLY OF THE FORKS CHANGES AND CHANGE DRUM

1. Install:
   Left-shift fork "1"
   Shift fork-Center "2"
   Right-shift fork "3"
   Drum changes "4"
   Springs
   Guide bar changes the grip of "5"
   Guide bar changes the grip of "6"

Downloaded from www.Manualslib.com manuals search engine

NOTE:

The markings on the shift forks should be facing the right side of engine and be in the following sequence: "R", "C", "L".

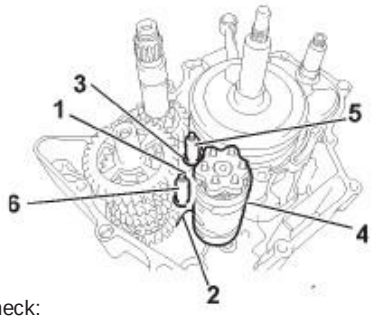

2. Check:
   - Transmission
   - Rough motion

repair

NOTE:

- Apply engine oil to each gear and bearing.
- Before assembling the engine crankcase, make sure the transmission is in neutral and that the gears rotate freely.

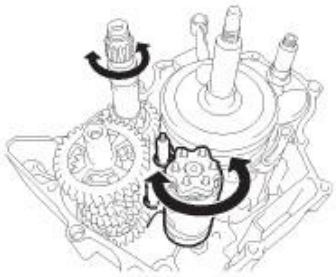

Downloaded from www.Manualslib.com manuals search engine

FUEL SYSTEM

CARB

CARBURETOR REMOVAL 6-1
CARBURETOR DISASSEMBLY 6-2
CARB INSPECTION 6-4
CARBURETOR ASSY 6-6
CARBURETOR ASSEMBLY 6-7
MEASURING AND ADJUSTING THE FUEL BLE 6-7
INSPECTION OF THE FUEL WRENCH 6-8

AIR INDUCTION SYSTEM

AIR INDUCTION SYSTEM 6-9
REMOVING THE AIR INDUCTION SYSTEM 6-10
INSPECTION SYSTEM AIR INDUCTION 6-11

Downloaded from www.Manualslib.com manuals search engine

CARB

Removing the carburetor

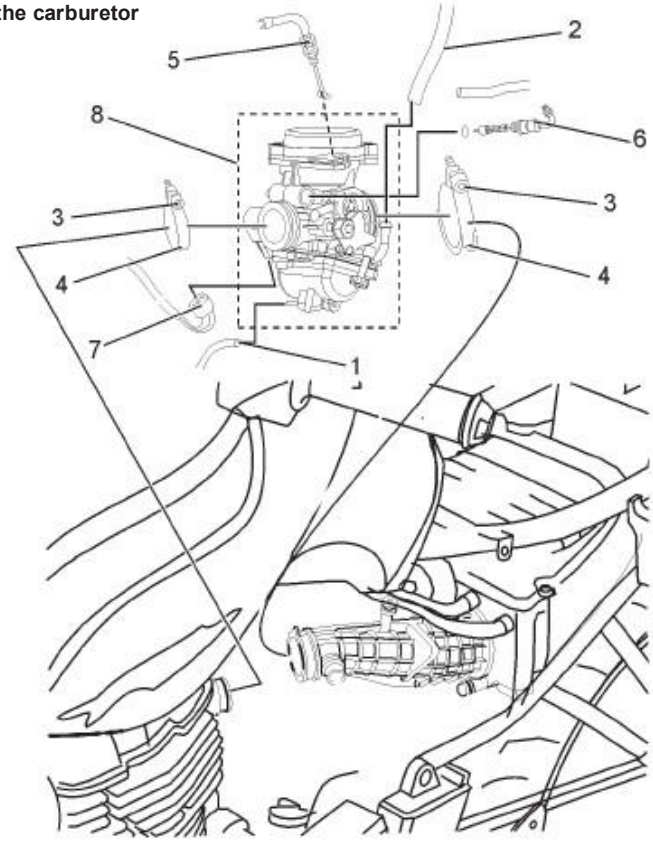

Order	Procedure / Parts to remove	Amount	Observations
	Seat, side covers 1 & 2, hose Fuel		Refer to "GENERAL CHASSIS "on page 4-1
1	Overflow fuel hose	1	Disconnect
2	Fuel line	1	
3	Screw clamp connection carburetor	1	Loosen
4	Screw clamp	1	
5	Throttle cable	1	
6	Starter cable	1	
7	TPS connector	1	
8	Carburetor	1	
			For assembly, reverse the procedure disassembly.

Downloaded from www.Manualslib.com manuals search engine

Disassemble the carburetor

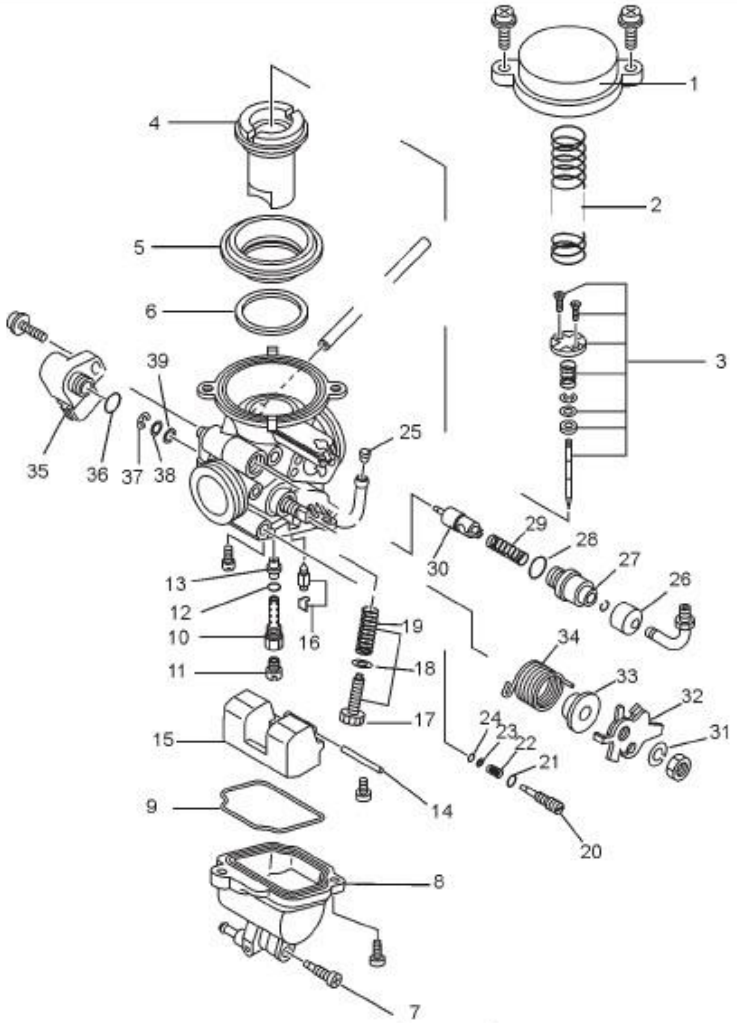

Order	Procedure / Parts to remove	Amount	Observations
	Disassemble the carburetor		Remove the parts in the order listed
1.	Diaphragm cover	1	
2.	Diaphragm spring	1	
3.		1	
4.	Needle valve	1	
5.	Piston valve	1	
6.		1	
7.	Diaphragm	1	
8.	Ring	1	
9.		1	
10.	Drain screw	1	
11.	Float chamber	1	
12.		1	
13.	O-ring	1	
	Support sprayer		
	Leading supplier		
	O-ring		
	Main nozzle		

Downloaded from www.Manualslib.com manuals search engine

Disassemble the carburetor

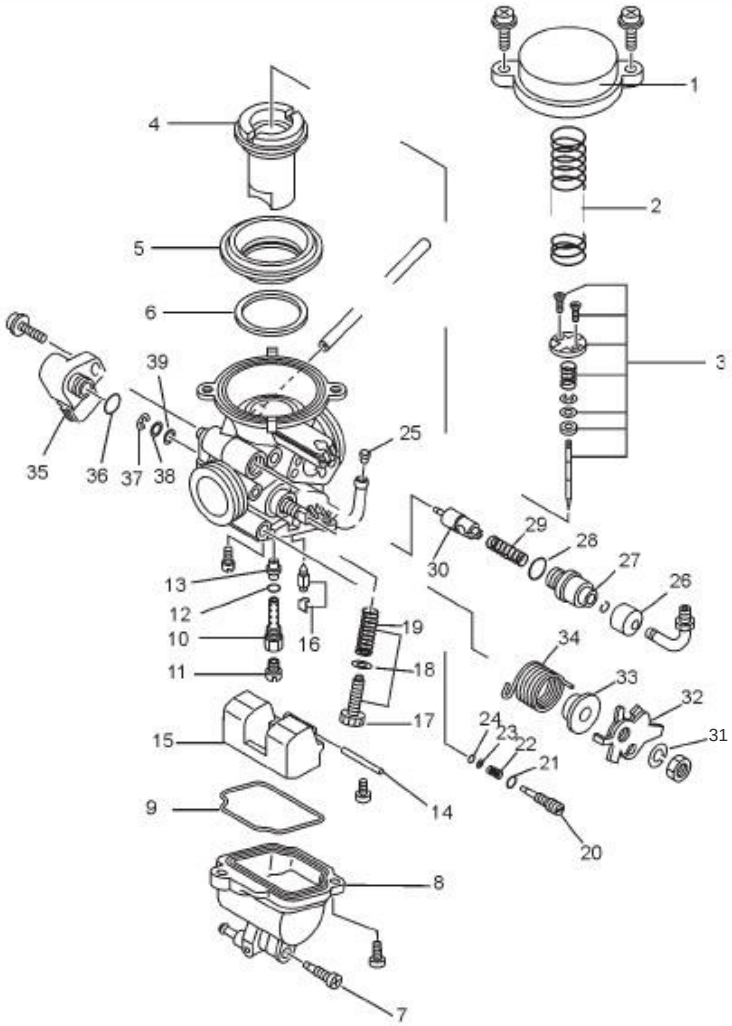

Order	Procedure / Parts to remove	Amount	Observations
14.	Float pin	1	
15.	Float	1	
16.		1	
17.	Set needle	1	
18.	Throttle stop screw	1	
19.		1	
20.	Washer	1	
21.	Spring	1	
22.		1	
23.	Jet pilot	1	
24.	O-ring	1	
25.		1	
26.	Washer	1	
27.	Spring	1	
	O-ring		
	Filter mesh		
	Cover plunger		
	Support guide		

Downloaded from www.Manualslib.com manuals search engine

Disassemble the carburetor

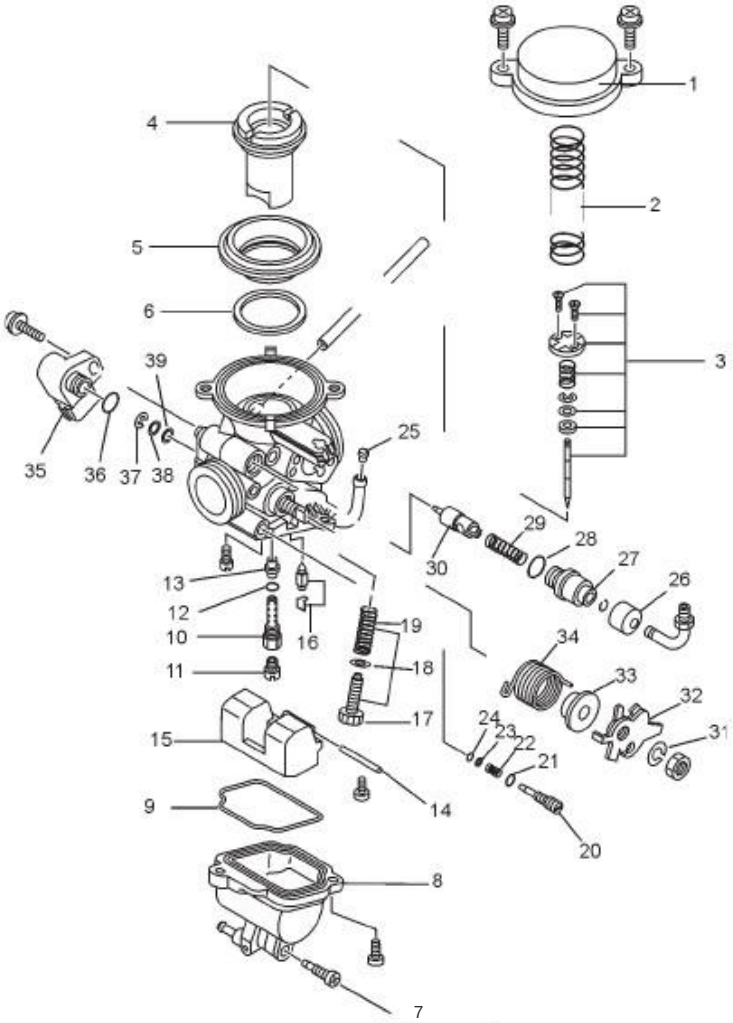

Order	Procedure / Parts to remove	Amount	Observations
28.	O-ring	1	
29.	Spring plunger	1	
30.		1	
31.	Plunger	1	
32.	Spring washer	1	
33.		1	
34.	Throttle stop	1	
35.	Stop washer	1	
36.		1	
37.	Spring	1	
38.	TPS	1	
39.		1	
	O-ring		
	Pin lock		
	Washer		
	Washer		
			For assembly, reverse the procedure disassembly.

Downloaded from www.Manualslib.com manuals search engine

CARBURETOR DISASSEMBLY

1. Check:
   - •Carburetor body "1"
   - •Float chamber "2"
   - •Accommodation supplier "3"
     Cracks / damage-Replace.

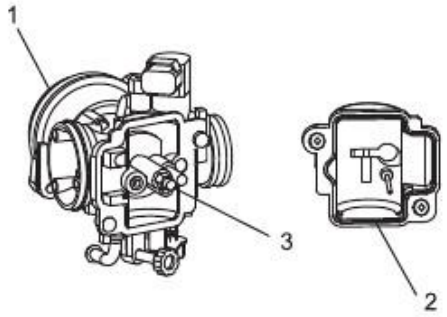

2. Check:
   - •Fuel passages
     Clogged - Clean.

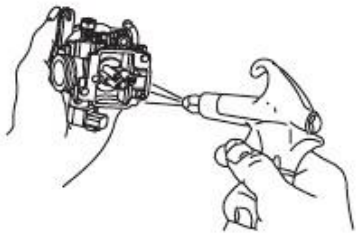

NOTE:

- Wash the carburetor based solvent oil.
- Do not use a caustic solution for carburetor cleaner.
- Blow out all passages and jets with air compressed.

3.Verificar:
- Diaphragm Valve "1"
  Cracks / damage - Replace

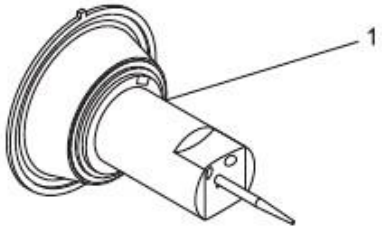

4.Verificar:
- Body of the float chamber "1"
  Dirt - Clean.

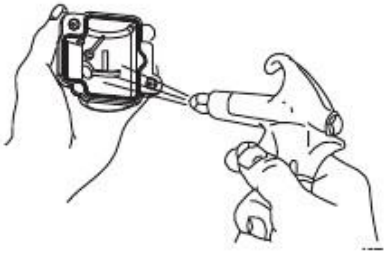

5.Verificar:
- Rubber gasket of the chamber float "1"
  Cracks / damage / wear - Replace.

NOTE:

Always replace the gasket with a new one.

6.Verificar:
- Float "1"
  Damage - Replace.

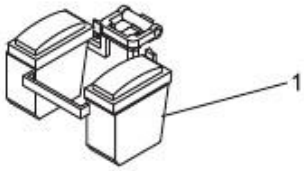

7.Verificar:
- Needle valve "1"
- •Seating the needle valve "2"
- •O-ring "3"
  Damage / obstruction / wear - Replace the needle valve "1", the valve seat needle "2" and O-ring "3" as a whole.

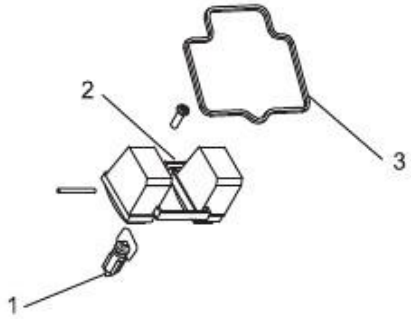

Downloaded from www.Manualslib.com manuals search engine

8. Check:
• Mesh Filter "1"
Damaged / obstructed ---- Replace

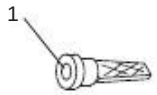

9. Check:
•Leading supplier "1" / accommodation supplier "2" / O-ring "3" / main nozzle "4"
Damage / obstruction - Replace

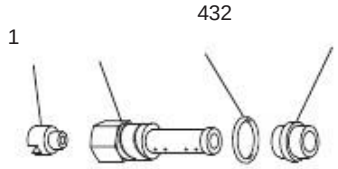

10. Check:
• jet pilot "1"
Damage / obstruction - Replace

11. Check:
• mixture screw "1"
Damage / wear - Replace.

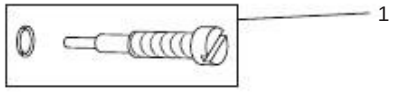

12. Check:
• throttle screw "1"
Damage / wear - Replace.

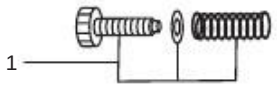

13.Verificar:
•YTPS "1"
Damage / faulty - Replace.
•Butterfly / Butterfly axis "2" movement
Obstruction / damage / wear - Replace Carburetor

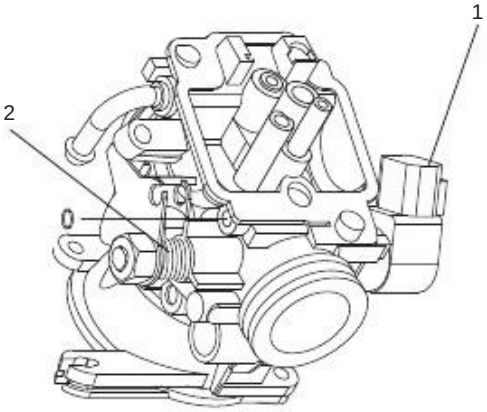

CARBURETOR ASSY

CAUTION:

•Before assembling the carburetor, wash all parts with a solvent-derived oil.
• Always use new gaskets.

1. Install:
•Throttle screw "1"
•Jet pilot "2"
•Main nozzle "3"
•O-ring "4"
•Main nozzle "5"
•Leading supplier "6"

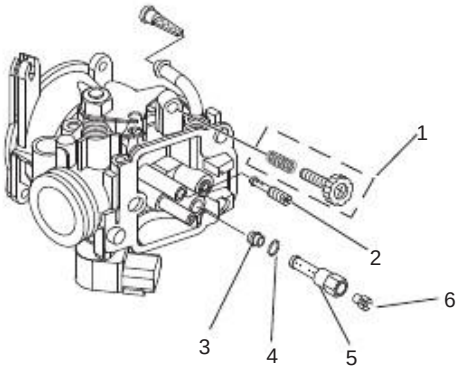

Downloaded from www.Manualslib.com manuals search engine

2.Install:
- mixture screw "1"
- Mesh Filter "2"

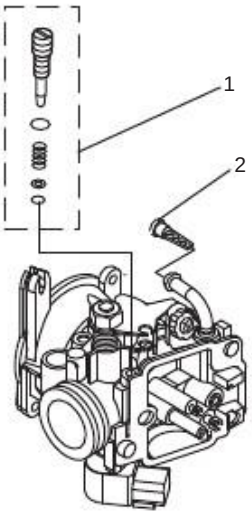

3.Instalar:
- Needle valve "1"

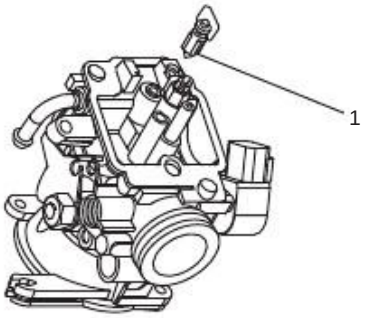

4. Install:
- Float "1"
- Float Pin "2"
- Screw "3"
- Gasket float chamber "4"
- Float chamber "5"

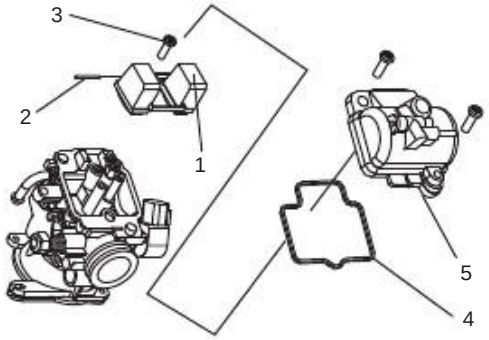

5.Instalar:
- Diaphragm Valve "1"

CAUTION

Do not overtighten any screws, this can damage gaskets and O-rings. This can lead to fuel leakage.

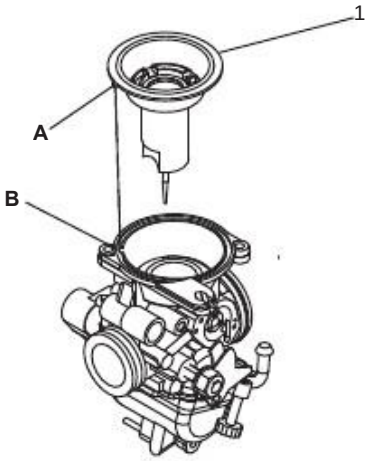

NOTE:
Make sure the raised "A", under the diaphragm, must be aligned with the slot "B" in the body of carburetor.

Downloaded from www.Manualslib.com manuals search engine

6. Install:
- Spring Iris "1"
- Cover the diaphragm "2", tighten the screws

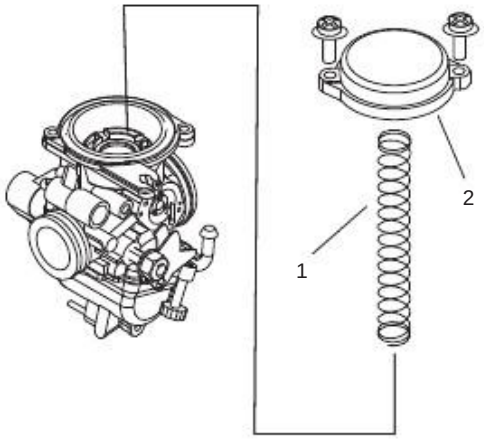

CARBURETOR ASSEMBLY

1.Connect all wires and cables.
Refer to "REMOVAL
MOTOR "on page 5-2.

2.Ajustar
- Set throttle cable free
Refer to "ADJUSTING THE GAME
THROTTLE CABLE FREE "
on page 3-6

3.Ajustar:
- Engine idle
1300 to 1500 r / min.
Refer to "ADJUSTING THE IDLE
ENGINE "on page 3-4

MEASURING AND ADJUSTING THE FUEL

1.Medir:
- Fuel level "a"
Out of specification - adjust

	Fuel level (below the contact surface of the chamber Float) 6.0 ~ 7.0 mm

a. Place the vehicle on
flat.
b. Place the vehicle on the supporting
desirable to ensure that the vehicle
stay straight.
c. Install the fuel level gauge
"1" in the fuel drain hose "2"
d. Loosen the fuel drain "3"
e. Keep the fuel level gauge
vertically alongside the float chamber "4"
f. Measure the fuel level "a".

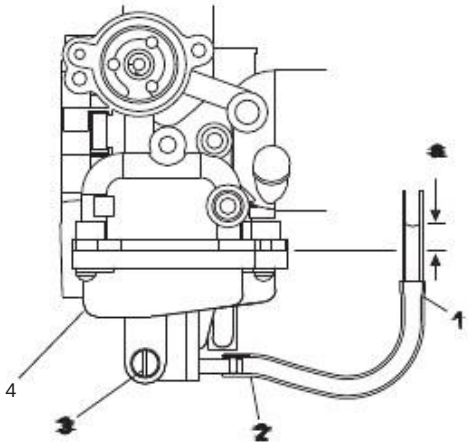

2.Ajustar:
- Fuel level

a. Removing the carburetor.
b. Check valve seat of the needle
and needle valve.
c. If either is worn, replace
as a whole.
d. If both are fine adjust the level of
bending the pin float float "1".
e. Install the carburetor.
f. Measuring the fuel level again.
g. Repeat steps a through f until the
fuel level is within the
specifications.

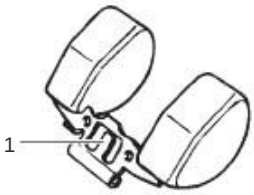

INSPECTION OF THE FUEL WRENCH

1.Check:
- Key fuel
Cracks / damage / wear - replace.

Downloaded from www.Manualslib.com manuals search engine

AIR INDUCTION SYSTEM

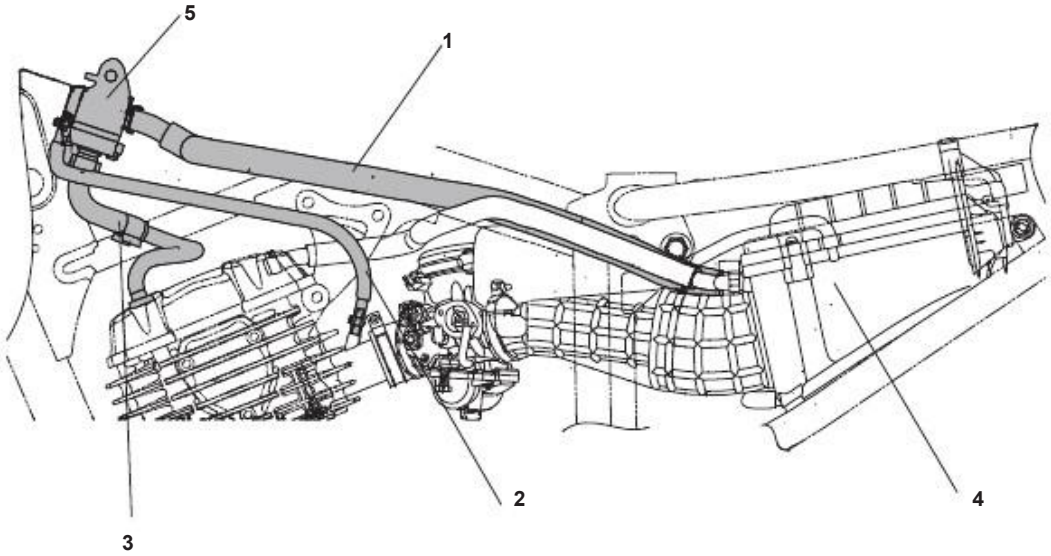

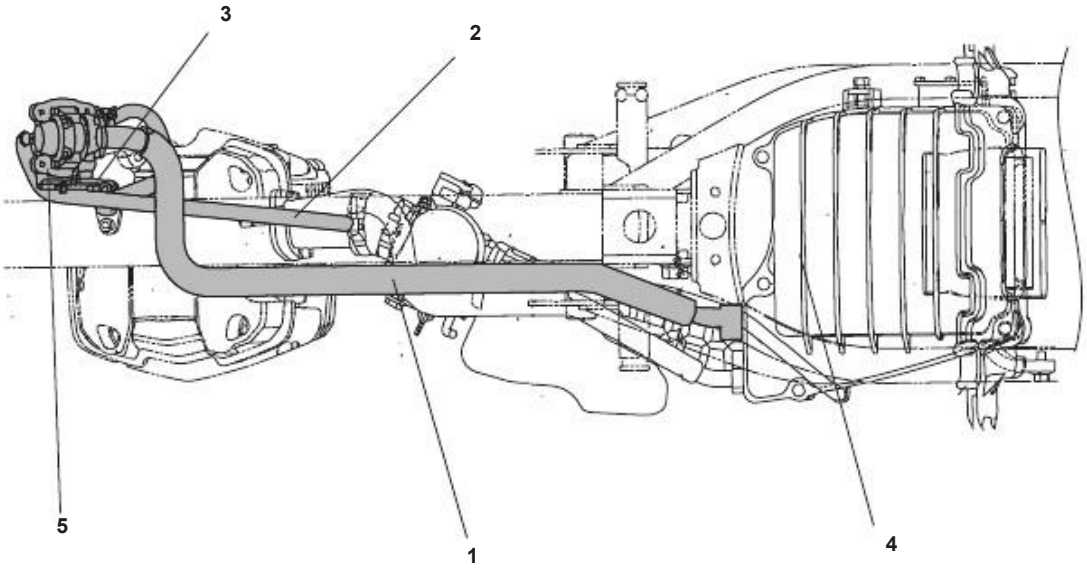

1 Hose air induction system (air filter).
2 Vacuum hose of the air induction system.
3 Through the air induction system (to the motor)
4 Air filter
5 Air induction system.

Downloaded from www.Manualslib.com manuals search engine

Removing the air induction system

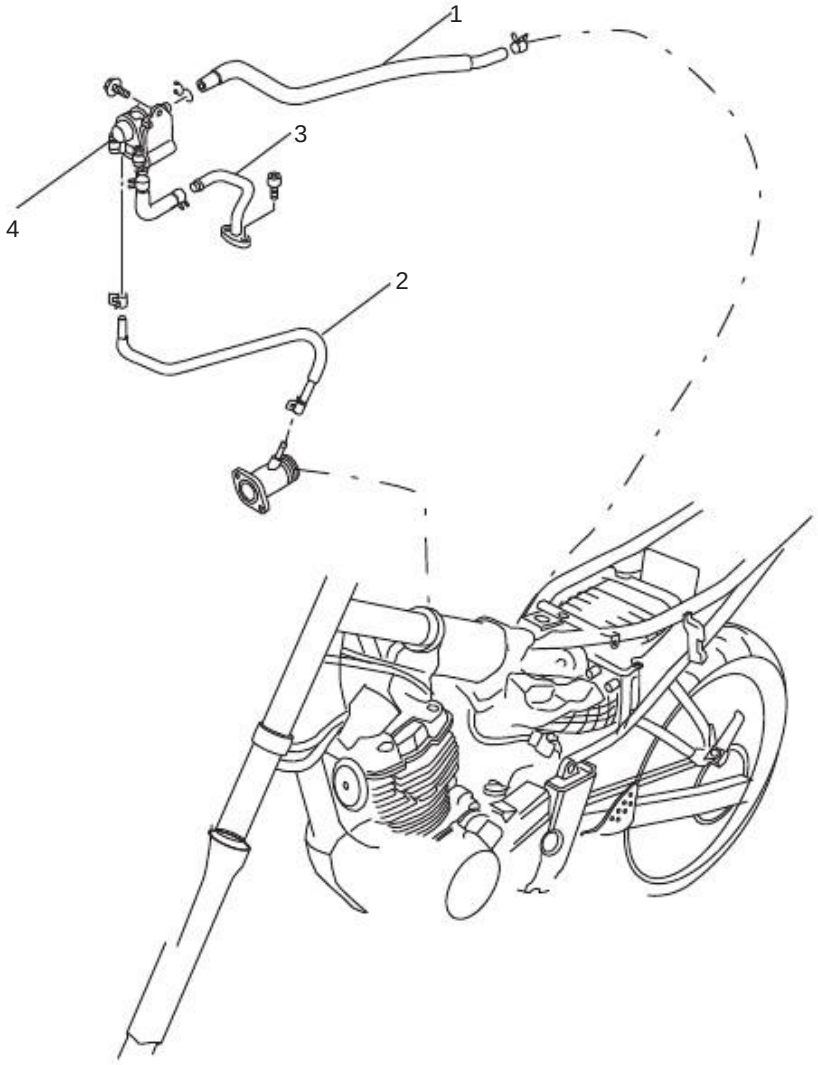

Order	Procedure / Parts to remove	Amount	Observations
	Seat, side cover, side cover 1 & 2		Refer to "GENERAL CHASSIS "on page 4-1
	Fuel tank		Refer to "GENERAL CHASSIS "on page 4-2
1	Hose air induction system (air filter).	1	
2	Vacuum hose of the air induction system.	1	
3	Air induction pipe (To the head)	1	
4	Air induction system.	1	
			For assembly, reverse the disassembly procedure.

Downloaded from www.Manualslib.com manuals search engine

INDUCTION SYSTEM INSPECTION
AIR
Air injection

The air induction system burning gases unburned exhaust by injecting fresh air (secondary air) at the port of exhaust, reducing the emission of hydrocarbons. When there is negative pressure in the port exhaust valve plates is opened, allowing secondary air into the exhaust port. The temperature required to burn the gases unburnt exhaust is approximately 600 to 700 ° C.

Air Switching Valve
The air shutoff valve is operated by the inlet gas pressure through valve diaphragm piston. Typically, cutting the valve opens to allow air ue the fresh air into the exhaust port. During a sudden deceleration (valve throttle suddenly closes), the pressure negative is generated, and the air shut-off valve closes to prevent combustion retarded. In addition, at high speed and when pressure decreases, the air shut-off valve closes automatically to protect from a performance loss due to self Exhaust Gas Recirculation (EGR).

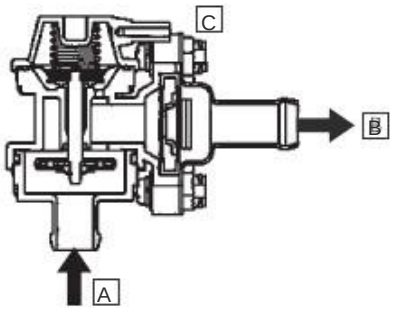

A. From the air filter box
B. Air flow to the exhaust port
C. To the intake manifold

1. Check:
• Hoses:
Loose — Connect correctly.
Cracks / damage Replace.
•Union 3-way
Cracks / damage Replace.
2. Check:
• Reed valve
•Valve stop reed
•Valve seat sheet
Cracks / damage Replace valve plates.
3. Check:
• Air shutoff valve
Cracks / damage Replace.
4. Check:
• Operation of the air shutoff valve
Replace does not work.

a. Blowing air through the hose end the air induction system (union of 3 ways to cut air valve) and check that the air flow from the air shutoff valve (Towards the butt).

Air shutoff valve is opened
Perform step (b).
Air shutoff valve closed
Replace the air shutoff valve.

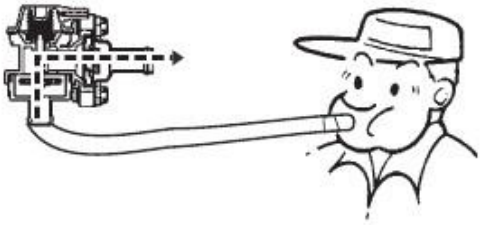

b. Install pump pressure / vacuum in the air shutoff valve "1" and apply negative pressure to the valve.

	Gauge

c. Blowing air through the end of the hose air induction system (3-way junction to the air shutoff valve) and check that no air flow and exit through of the air shutoff valve (toward the stock).

Downloaded from www.Manualslib.com manuals search engine

Air shutoff valve is opened
Replace the air shutoff valve.
Air shutoff valve closed
The air shutoff valve is OK

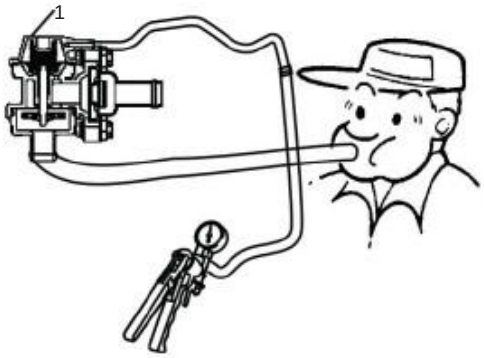

NOTE:
This test should be performed when the pressure is less than - 50 kPa.

Downloaded from www.Manualslib.com manuals search engine

ELECTRICAL

IGNITION SYSTEM 7-1
CIRCUIT DIAGRAM 7-1
TROUBLESHOOTING 7-3

ELECTRIC STARTING SYSTEM 7-5
CIRCUIT DIAGRAM 7-5
OPERATING SYSTEM BOOT CUT 7-7
TROUBLESHOOTING 7-9

CHARGING SYSTEM 7-11
CIRCUIT DIAGRAM 7-11
TROUBLESHOOTING 7-13

LIGHTING SYSTEM 7-14
CIRCUIT DIAGRAM 7-14
TROUBLESHOOTING 7-16

SIGNALLING SYSTEM 7-17
CIRCUIT DIAGRAM 7-17
TROUBLESHOOTING 7-19

SELF DIAGNOSIS FUNCTION 7-23
SELF DIAGNOSIS FUNCTION 7-23
WARNING LIGHT ENGINE FAILURE ERROR CODE 7-23
FAULT CODE TABLE 7-24
INSPECTION OF BULB WARNING LIGHT ENGINE 7-24
METHOD OF SOLUTION OF PROBLEMS 7-24
SETTLEMENT DETAILS pro blems 7-25

ELECTRICAL COMPONENTS 7-28
CHECKING SWITCHES 7-30
VERIFICATION OF BULBS AND SOCKETS OF BULBS 7-33
CHECKING THE FUSE 7-34
CHECKING AND CHARGING 7-34
CHECKING THE RELAYS 7-37
VERIFICATION OF RELAY TURN SIGNAL 7-38
CHECKING THE SPARK PLUG HOOD 7-39
CHECKING THE IGNITION COIL 7-39
VERIFICATION OF THE DISTANCE FROM THE SPARK IGNITION 7-40
CHECKING THE CRANKSHAFT POSITION SENSOR 7-40
VERIFICATION OF PERFORMANCE STARTER 7-40
CHECKING THE STATOR COIL 7-41
VERIFICATION OF THE REGULATOR / RECTIFIER 7-41
SPEAKER VERIFICATION 7-42
VERIFICATION OF FUEL GAUGE 7-42
CHECKING THE THROTTLE POSITION SENSOR 7-43
CHECKING THE SPEED SENSOR 7-43

Downloaded from www.Manualslib.com manuals search engine

IGNITION SYSTEM

CIRCUIT DIAGRAM

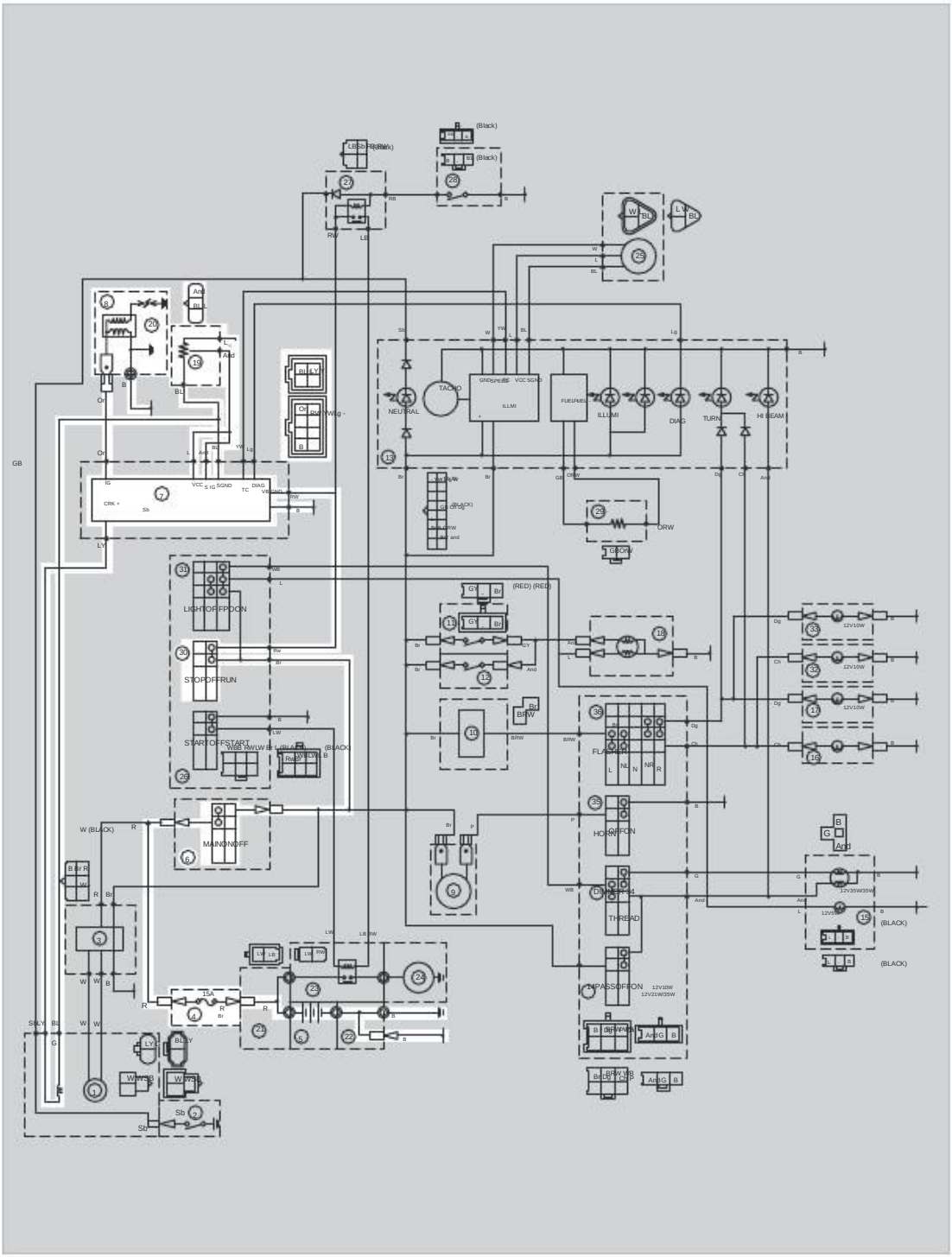

Downloaded from www.Manualslib.com manuals search engine

1. Magneto CA
3. Unit Regulator / Rectifier
4. Main fuse
5. Battery
6. Main switch
7. CDI
8. Ignition coil
19. TPS
20. Plug
21. Cable Positive +
22. Negative cable -
30. Engine stop switch

Downloaded from www.Manualslib.com manuals search engine

TROUBLESHOOTING

The ignition system is not working (no spark or intermittent spark).

NOTE:

•Before troubleshooting, remove the following parts:
1. Seat
2. Side cover 1 and 2
3. Fuel tank

1. Check the fuse. See the section "CHECKING THE FUSE" on page 7-34.	NG →	Replace the fuse.
OK ↓		
2. Check the battery. See the section "CHECKING AND CHARGING BATTERY "on page 7-34.	NG →	• Clean the battery terminals • Recharge or replace battery.
OK ↓		
3. Check the spark plug. See the section "CHECKING THE SPARK" in page 3-7.	NG →	Re-calibrate or replace the spark plug.
OK ↓		
4. Check the spark plug cap. See the section "CHECKING THE HOOD SPARK PLUG "on page 7-39.	NG →	Replace the spark plug cap.
OK ↓		
5. Check the ignition coil. See the section "CHECKING THE COIL ON "on page 7-39.	NG →	Replace the ignition coil.
OK ↓		
6. Check the position sensor crankshaft. See the section "CHECK SENSOR CRANKSHAFT POSITION "in the page 7-40.	NG →	Replace the throttle position sensor of the crankshaft.
OK ↓		
7. Check main switch. See the section "CHECKING THE SWITCH MAIN "on page 7-30.	NG →	Replace the main switch.
OK ↓		
8. Check the TPS See the section "TPS VERIFICATION" on page 7-43	NG →	Replace the TPS.
OK ↓		

Downloaded from www.Manualslib.com manuals search engine

9. Check the stop switch motor. Refer to the "VERIFICATION SWITCH "on page 7-30.	NG →	The engine stop switch is damaged. Replace the switch right handlebar
OK ↓		
10.Verificar Wiring system full power. See section "CHART CIRCUIT "on page 7-1.	NG →	Connect or repair wiring system Ignition
OK ↓		
Replace the CDI.		

Downloaded from www.Manualslib.com manuals search engine

STARTING CIRCUIT

CIRCUIT DIAGRAM

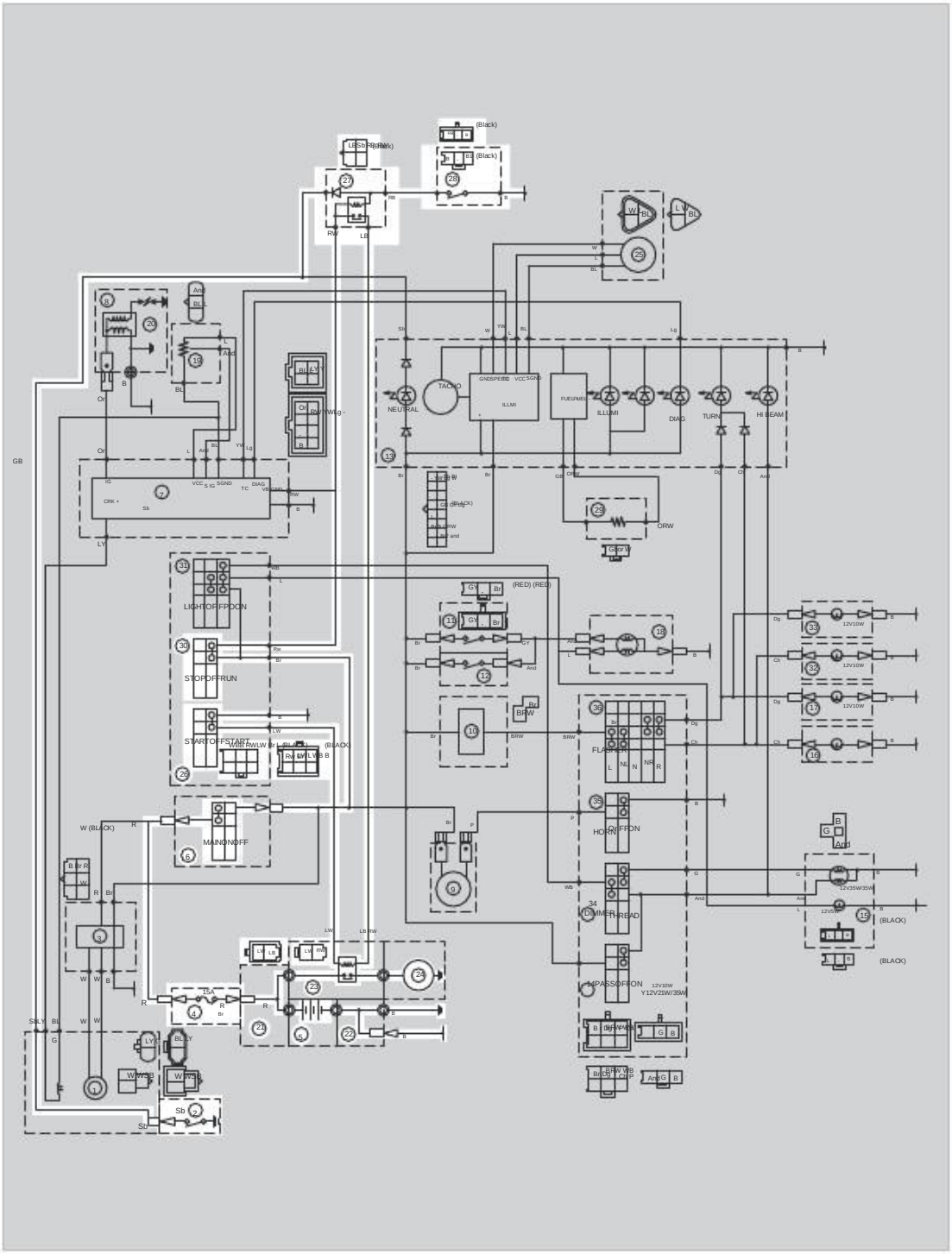

Downloaded from www.Manualslib.com manuals search engine

2. Neutral switch
4. Main fuse
5. Battery
6. Main switch
21. Cable Positive +
22. Negative cable -
23. Starter relay
24. Starter
26. Start switch
27. Starter cut relay
28. Clutch switch
30. Engine stop switch

Downloaded from www.Manualslib.com manuals search engine

SYSTEM OPERATION STARTING CIRCUIT COURT

If the engine cutoff switch is set to "" and the ignition key is positioned "ON" (both switches are closed), the starter will operate if one of the following conditions is served:
•The transmission is in neutral (the neutral switch is closed).
•Pull the clutch lever to the handlebar (the clutch switch is closed).
The cutting power, prevents the starter motor running when one of the above conditions is not met. In this case, the starting circuit is open, then the current fails to reach the starter motor. When at least one of the above conditions is met, the starting circuit is closed and can start the engine by pressing the start switch. "'

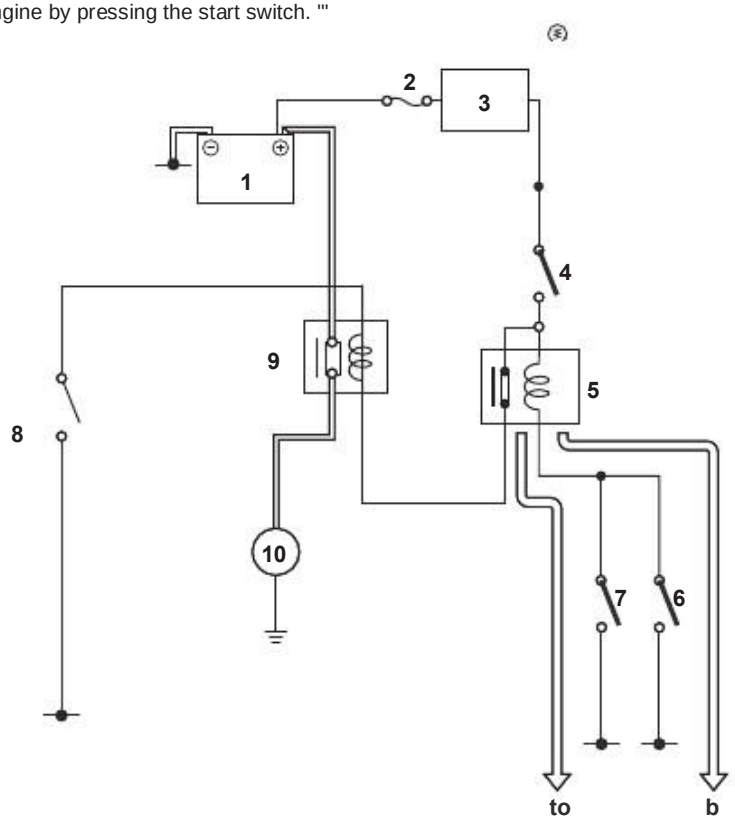

Downloaded from www.Manualslib.com manuals search engine

a. WHEN THE TRANSMISSION IS IN NEUTRAL
b. WHEN IS CLUTCH LEVER SHOT TO THE HANDLEBARS
1. Battery
2. Fuse
3. Main switch
4. Engine stop switch
5. Starter cut relay
6. Clutch switch
7. Neutral switch
8. Start switch
9. Start relay
10. Starter

Downloaded from www.Manualslib.com manuals search engine

TROUBLESHOOTING
The starter will not start.

NOTE:

•Before troubleshooting, remove the following parts:
1. Seat
2. Side cover 1 and 2

1. Check the fuse. Refer to the "VERIFICATION FUSE "on page 7-34. OK ↓	NG →	Replace the fuse.
2. Check the battery. See the section "CHECKING AND CHARGING BATTERY "on page 7-34. OK ↓	NG →	• Clean the battery terminals • Recharge or replace battery.
3. Check operation of engine boot. Refer to the "VERIFICATION ENGINE PERFORMANCE START "on page 7-40. NG ↓	OK →	The starter is good. Perform electrical troubleshooting ignition system, from step 5.
4. Check the engine starts. Refer to the "VERIFICATION ENGINE START "in the page 5-33. OK ↓	NG →	Repair or replace starter.
5. Check the relay circuit court starting. Refer to the "VERIFICATION RELAYS "on page 7-37. OK ↓	NG →	Replace the starter cut relay.
6. Check the starter relay. Refer to the "VERIFICATION RELAYS "on page 7-37. OK ↓	NG →	Replace the starter relay.
7. Check main switch. Refer to the "VERIFICATION SWITCH "on page 7-30. OK ↓	NG →	Replace the main switch.

Downloaded from www.Manualslib.com manuals search engine

8. Check the stop switch motor. See the section "VERIFICATION SWITCHES "on page 7-30.

NG → The engine stop switch is damaged. Replace i n t e r r u p t o r right handlebar

OK ↓

9. Check the neutral switch. Refer to the "VERIFICATION SWITCH "on page 7-30.

NG → Replace the neutral switch.

OK ↓

10. Verificar clutch switch. Refer to the "VERIFICATION SWITCH "on page 7-30.

NG → Replace the clutch switch.

OK ↓

11. Verificar the starter switch. Refer to the "VERIFICATION SWITCH "on page 7-30.

NG → The ignition switch is faulty. Replace the switch right handlebar

OK ↓

12. Verificar Wiring system boot. See the section "CIRCUIT DIAGRAM" on page 7-5.

NG → Connect or repair wiring system Boot

OK ↓

The circuit of the ignition system is OK

Downloaded from www.Manualslib.com manuals search engine

CHARGING SYSTEM

CIRCUIT DIAGRAM

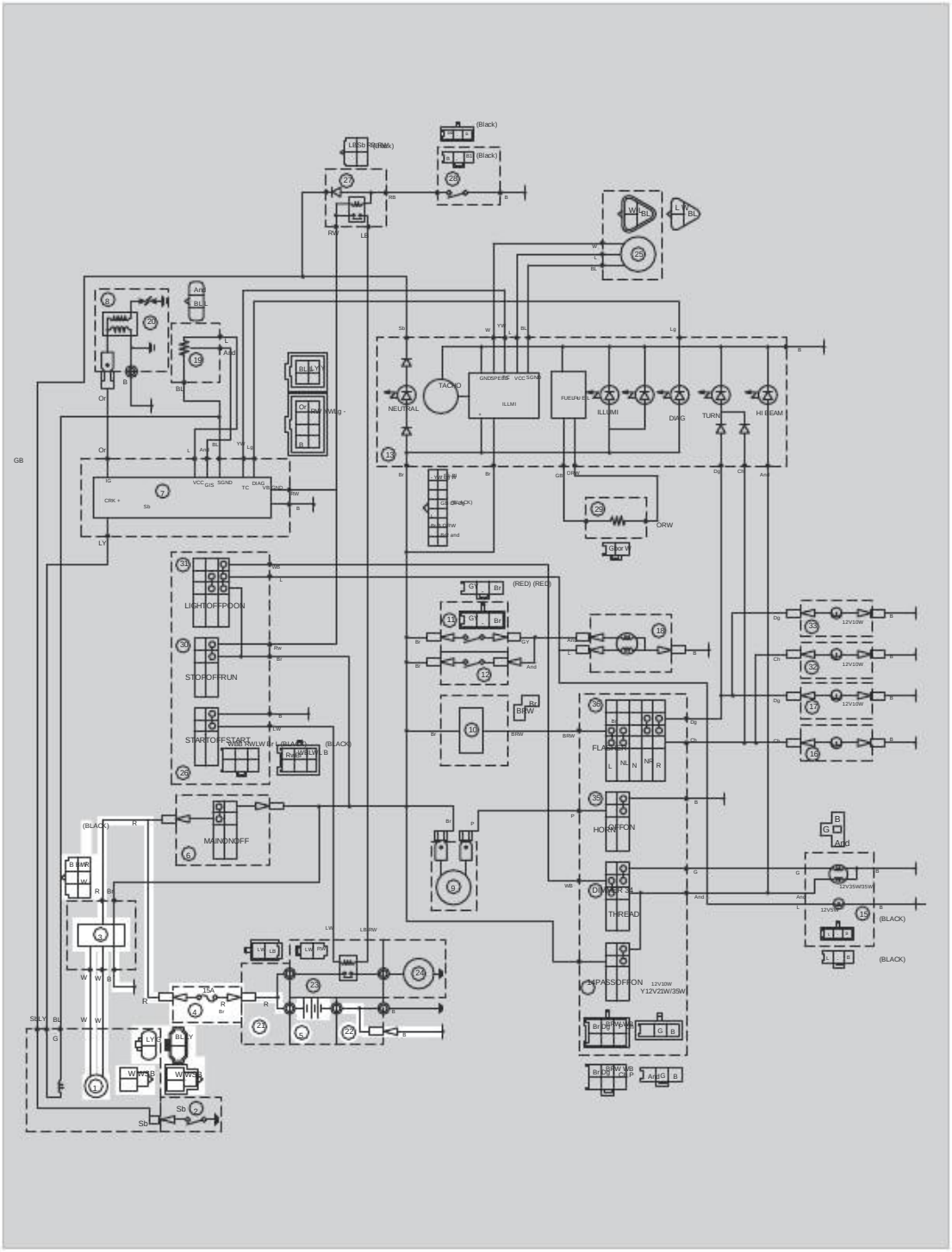

Downloaded from www.Manualslib.com manuals search engine

1. Magneto CA
3. Regulator / rectifier
4. Main fuse
5. Battery
21. Cable Positive +
22. Negative cable -

Downloaded from www.Manualslib.com manuals search engine

TROUBLESHOOTING
The battery is not charging.

NOTE:

•Before troubleshooting, remove the following parts:
1. Seat
2. Left side panel / cap.

1. Check the fuse. Refer to the "VERIFICATION FUSE "on page 7-34	NG →	Replace the fuse
OK ↓		
2. Check the battery. Refer to the "VERIFICATION AND CHARGING THE BATTERY "in page 7-34.	NG →	• Clean the battery terminals • Recharge or replace battery.
OK ↓		
3. Verify operation of the coil the stator. See the section "CHECKING THE COIL STATOR "on page 7-41.	NG →	Change the position of position sensor Crankshaft / stator.
OK ↓		
4. Check the regulator / rectifier. Refer to the "VERIFICATION REGULATOR / RECTIFIER "in page 7-41.	NG →	Replace the regulator / rectifier.
OK ↓		
5. Check the wiring system load. See the section "CIRCUIT DIAGRAM" on page 7-11.	NG →	Connect or repair wiring system Load
OK ↓		
The circuit of the charging system is OK		

Downloaded from www.Manualslib.com manuals search engine

LIGHTING SYSTEM

CIRCUIT DIAGRAM

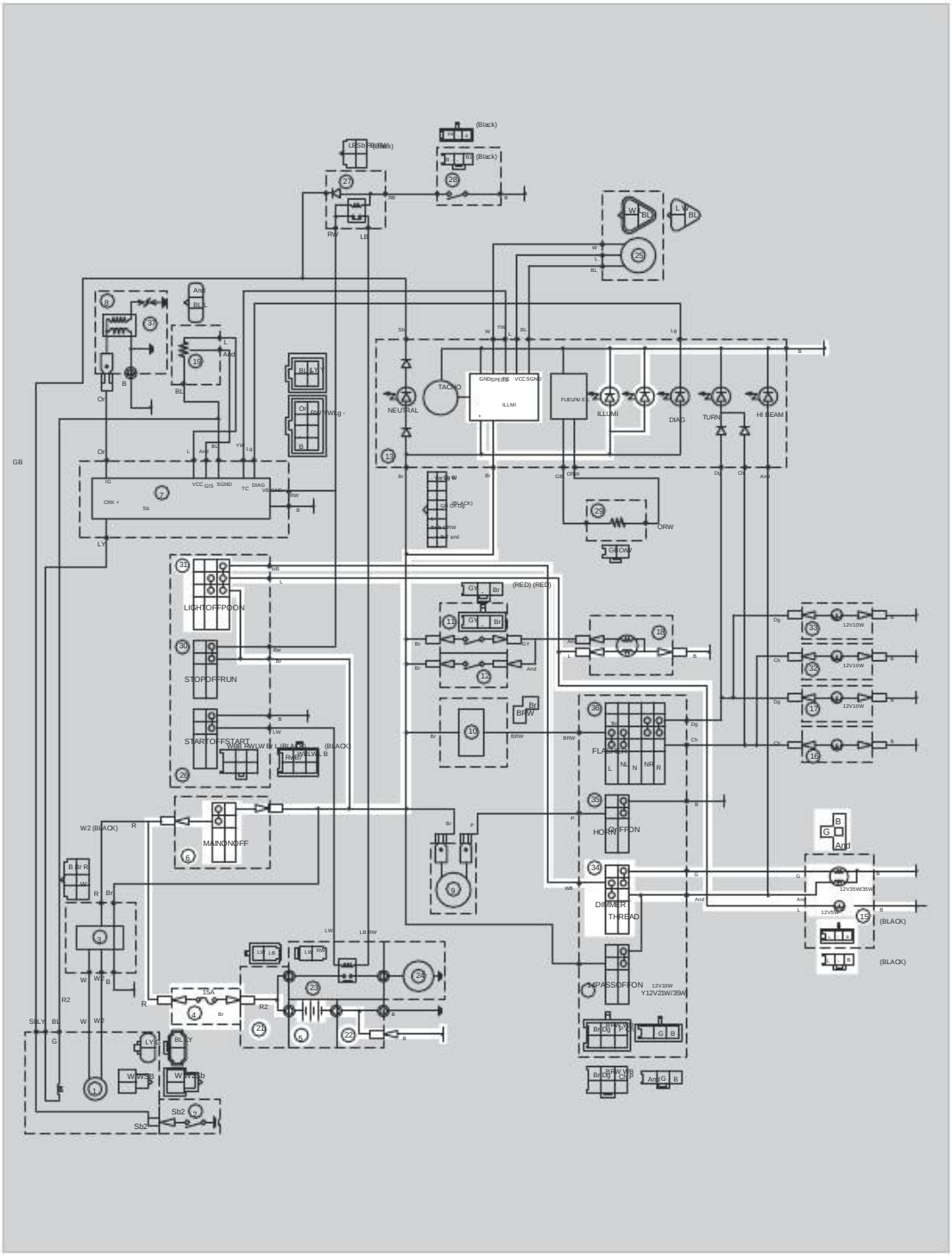

Downloaded from www.Manualslib.com manuals search engine

4. Main fuse
5. Battery
6. Main switch
13. Meter
15. Streetlight
18. Taillight
21. Cable Positive +
22. Negative cable -
Light switch 31
34. Light switch

Downloaded from www.Manualslib.com manuals search engine

TROUBLESHOOTING

Any of the following lights failure: Lamp, light-beam indicator, backlight, auxiliary light or light meter.

NOTE:

• Before troubleshooting, remove the following parts:

1. Seat
2. Cap 1 and cap 2
3. Streetlight
4. Fuel tank

1. Check each bulb and the condition each bulb socket. See in "VERIFICATION Bulbs and sockets THE BULBS "on page 7-33.	NG →	Replace the bulb (s) and socket bulb (s).
Ok ↓		
2. Check the fuse. Refer to the "VERIFICATION FUSE "on page 7-34.	NG →	Replace the fuse.
Ok ↓		
3. Check the battery. Refer to the "VERIFICATION AND CHARGING THE BATTERY "on page 7-34.	NG →	•Clean the battery terminals •Recharge or replace battery.
Ok ↓		
4. Check main switch. Refer to the "VERIFICATION SWITCH "on page 7-30.	NG →	Replace the main switch.
Ok ↓		
5. Check the light switch. Refer to the "VERIFICATION SWITCH "on page 7-30.	NG →	The light switch is broken. Replace the left switch handlebar
Ok ↓		
6. Check the switch step. Refer to the "VERIFICATION SWITCH "on page 7-30.	NG →	The step switch is defective. Replace the left switch handlebar
Ok ↓		
7. Check the wiring system lights. See the section "CIRCUIT DIAGRAM" on page 7-14.	NG →	Connect or repair wiring system Boot
Ok ↓		
The system circuit is OK		

Downloaded from www.Manualslib.com manuals search engine

SIGNALLING SYSTEM

CIRCUIT DIAGRAM

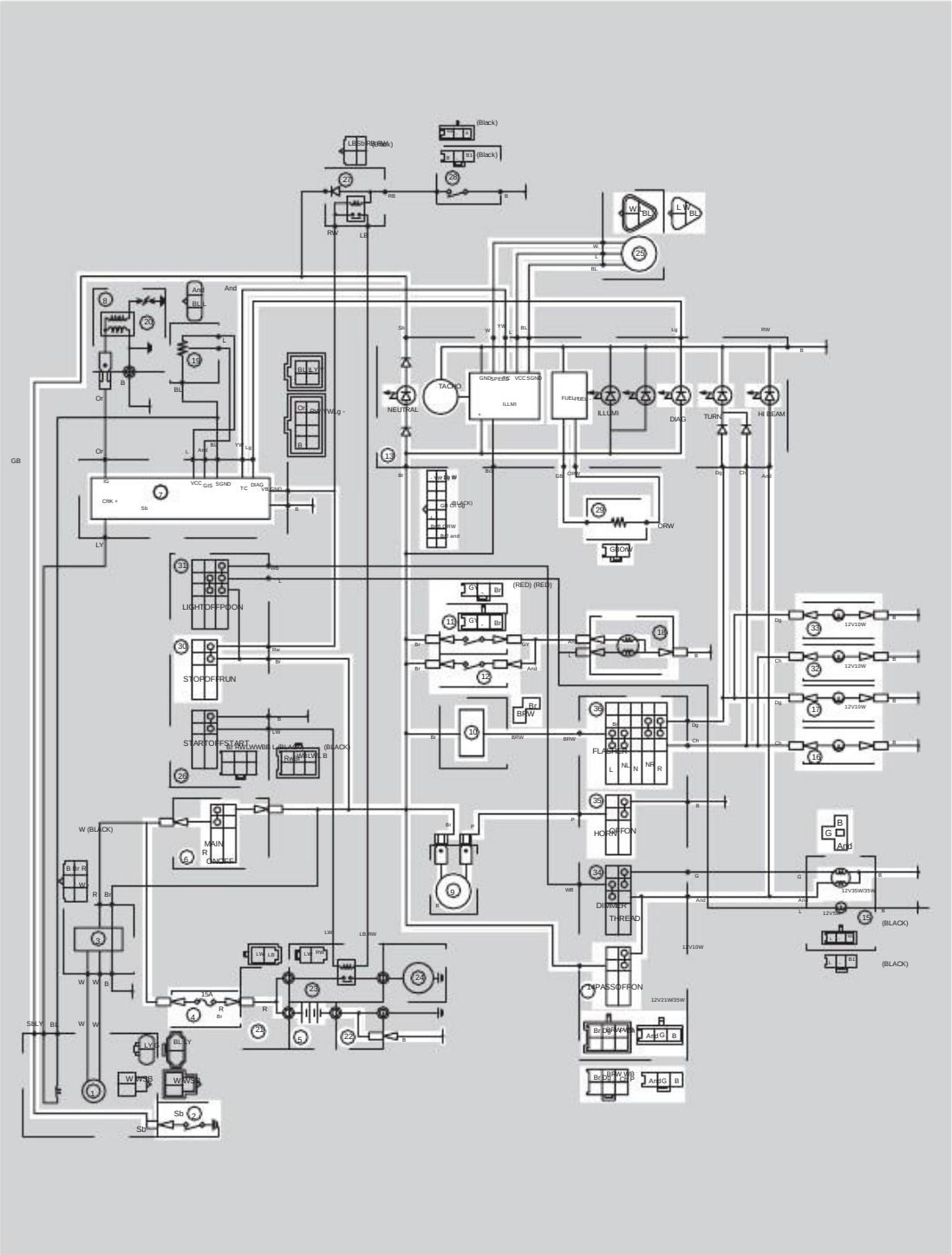

Downloaded from www.Manualslib.com manuals search engine

2. Neutral switch
4. Main fuse
5. Battery
6. Main switch
7. CDI
9. Horn
10. Relay turn signal
11. Front brake switch
12. Rear brake switch
13. Meter
16. Headlight turn indicator (LH)
17. Headlight turn indicator (RH)
21. Cable Positive +
22. Negative cable -
25. Speed sensor
29. Fuel gauge
32. Backlight turn indicator (LH)
33. Backlight turn indicator (RH)
35. The horn switch
36. Switch turn signal

Downloaded from www.Manualslib.com manuals search engine

TROUBLESHOOTING

•Any failure following lights: turn indicator lights, brake light or indicator lights.
•The horn does not sound.
•The fuel gauge does not work.

NOTE:

•Before troubleshooting, remove the following parts:

1. Seat
2. Fuel tank
3. Streetlight
4. Multi-function display

1. Check the fuse. Refer to the "VERIFICATION FUSE "on page 7-34.	NG →	Replace the fuse.
Ok ↓		
2. Check the battery. Refer to the "VERIFICATION AND CHARGING THE BATTERY "on page 7-34.	NG →	•Clean the battery terminals •Recharge or replace battery.
Ok ↓		
3. Check main switch. Refer to the "VERIFICATION SWITCH "on page 7-30.	NG →	Replace the main switch.
Ok ↓		
4. Check the circuit wiring signaling system. Refer to the "VERIFICATION SIGNAL SYSTEM "	NG →	Connect or repair wiring system signaling.
Ok ↓		
Check the status of each of the signaling system circuits. See "Verifying Signalling System ".		

Verification of the signaling system

THE HORN DOES NOT SOUND.

1. Check the switch on the horn. Refer to the "VERIFICATION SWITCH "on page 7-30.	NG →	The horn switch is faulty. Replace the left switch handlebar
Ok ↓		
2. Check the horn. Refer to the "VERIFICATION HORN "on page 7-42.	NG →	Replace the horn.
Ok ↓		

Downloaded from www.Manualslib.com manuals search engine

3. Check the wiring system signaling. See the section "CIRCUIT DIAGRAM" on page 7-17.	NG →	Connect or repair wiring system signaling
Ok ↓		
The system circuit is OK		

The brake light / rear does not light.

1. Check the bulb brake light / Back and the socket. Refer to the "VERIFICATION THE BULBS AND SOCKETS OF BULBS "on page 7-33.	NG →	Replace the light bulb brake / rear, the socket or both
Ok ↓		
2. Check the front brake switch. Refer to the "VERIFICATION SWITCH "on page 7-30.	NG →	Replace the brake switch front.
Ok ↓		
3. Check the rear brake switch. Refer to the "VERIFICATION SWITCH "on page 7-30.	NG →	Replace the rear brake switch.
Ok ↓		
4. Check the wiring system signaling. See the section "CIRCUIT DIAGRAM" on page 7-17.	NG →	Connect or repair wiring system signaling
Ok ↓		
The system circuit is OK		

Shift indicator light, indicator light turning, both or no flash.

1. Check the indicator light bulb of rotation and the socket. Refer to section "VERIFICATION BULBS AND SOCKETS OF THE BULBS "on page 7-33.	NG →	Replace the indicator light bulb Turning the socket or both
Ok ↓		
2. Check the indicator bulb rotation and the socket. See the section "CHECKING THE BULBS AND SOCKETS OF BULBS " on page 7-33.	NG →	Replace the bulb indicator turn, the socket or both
Ok ↓		

Downloaded from www.Manualslib.com manuals search engine

3. Check the light switch indicator of rotation. Refer to section "VERIFICATION SWITCHES "on page 7-30.	NG →	The horn switch is faulty. Replace the left switch handlebar
Ok ↓		
4.Verificar relay indicator light of rotation. See the section "CHECKING THE RELAY TURN INDICATOR LAMP "on page 7-38.	NG →	Replace the relay indicator light rotation.
Ok ↓		
5.Verificar wiring system signaling. See the section "CIRCUIT DIAGRAM" on page 7-17.	NG →	Connect or repair wiring system signaling
Ok ↓		
Replace the meter		

The neutral indicator light does not light.

1.Check the light bulb neutral and the socket. Refer to section "VERIFICATION BULBS AND SOCKETS OF THE BULBS "on page 7-33.	NG →	Replace the light bulb neutral socket or both
Ok ↓		
2.Check neutral switch. Refer to the "VERIFICATION SWITCH "on page 7-30.	NG →	Replace the neutral switch
Ok ↓		
3.Verificar wiring system signaling. See the section "CIRCUIT DIAGRAM" on page 7-17.	NG →	Connect or repair wiring system signaling
Ok ↓		
Replace the meter.		

The fuel gauge does not work.

1.Check fuel gauge. Refer to the "VERIFICATION FUEL GAUGE "in page 7-43.	NG →	Replace the fuel gauge .
Ok ↓		

Downloaded from www.Manualslib.com manuals search engine

2.Check wiring system signaling. See the section "CIRCUIT DIAGRAM" on page 7-17.

NG →

Connect or repair wiring system signaling

Ok ↓

Replace the meter.

Downloaded from www.Manualslib.com manuals search engine

SELF-DIAGNOSIS FUNCTION
The vehicle is equipped with an auto-diagnosis. If this function detects a bad Operating on the system immediately operates the engine under substitute characteristics and illuminates the warning light engine failure to alert the driver that there has been a system failure. Once the malfunction has been detected, an error code will stored in the memory of CDI.

- If there is a fault in the system by the auto-diagnosis, alerts the driver of evil detection operation, illuminating the warning light engine failure.

- After the engine has stopped, the error code number appears in the light of engine failure warning. Will be stored in system memory until it is deleted.

1. Warning light engine failure.

Fault identification code of the warning light engine trouble
10 Digits: Cycles of 1 second and 1.5 seconds ON ON OFF OFF.
1 Digit: Cycles of 0.5 seconds on 0.5 seconds ON and OFF position.

Example: Fault code No. 15

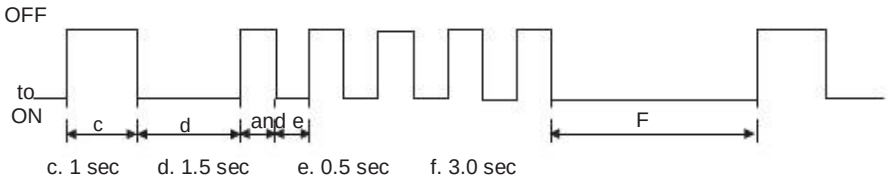

a. Light on
b. Light off
c. 1
d. 1.5
e. 0.5
f. 3

Downloaded from www.Manualslib.com manuals search engine

FAULT CODE TABLE

Code fault	Item	Symptom	Can / Can / can not can not boot drive	
15	Throttle Position Sensor Throttle Position Sensor: (Open or short) open or short circuit detected.		Can	Can
16	Throttle Position Sensor Throttle Position Sensor (Attached) is attached		Can	Can

Verification of the light bulb warning of engine failure
The warning light engine trouble lights for 3 seconds after the main switch is turned to "ON". If the warning light does not light in these conditions, communication cable is disconnected or the LEDs of the warning light can be defective.

a. Switch to "OFF"
b. Switch to "ON"
c. Warning light malfunction motor off
d. Warning light engine failure on for 3 seconds

METHOD OF SOLUTION OF PROBLEMS

Engine operation is not normal and light warning lights engine failure.
1. Check:
• fault code number

a. Check the fault code that appears in the meter.
b. Identify the flaw in the system with code fault.
See "Table function self-diagnosis. "
c. Identify the likely cause of the failure.
See "Fault Code Chart".

2. Check and repair the probable cause of evil operation.

Fault code No.	No fault code
Check and repair. See s e c c i o n "D TA L L E E S S E TROUBLESHOOTING " Monitor the performance of sensors and actuators in the diagnostic mode. See s e c c i o n "Ta b l a d e operation of sensors' and "Table operating actuators "	Check and repair See "Table of the function self-diagnosis "

Turn the main switch to "OFF" and return to "ON", and check for any number of fault code is displayed.

Downloaded from www.Manualslib.com manuals search engine

TROUBLESHOOTING DETAILS

This section describes the steps to the fault code number displayed on the meter.
Check and service elements or components that are the likely cause of failure.

Fault code No.	15	Symptom Throttle position sensor: open circuit or short circuit detected	
Order	**Item / components and cause likely**	**Verification or maintenance work**	**Method reinstatement**
1	Condition sensor assembly throttle position.	• Check for loose or pressed. • Check that the sensor is assembled at the specified position.	Turn the switch the main ON
2	Connections • Plug the position sensor accelerator • IDC connector on the harness	• Check the terminals of the coupler is may have left. • Check the lock status coupler. • If a malfunction, repair and connect the a coupler segra.u	
3	Open or short circuit in cable harness	• Repair or replace if there is a circuit open or short. • between the connector position sensor accelerator and the CDI connector (Black / blue, black / blue) (Yellow-yellow) (Blue-blue)	
4	Throttle Position Sensor defective.	• Check for open circuit and replace The throttle position sensor.	
		Circuit detail open / Output Voltage	
		Ground wire open circuit / 5V	
		Output Cable open circuit Source / 0V	
		feeding open circuit / 0V	
5	Throttle Position Sensor defective.	• Replace the carburetor, if you are defective Refer to "CHECKING POSITION SENSOR ACCELERATOR "on page 8-72. **CAUTION:** Do not remove the position sensor carburetor throttle.	

Downloaded from www.Manualslib.com manuals search engine

Fault code No.	16	The throttle position sensor is attached	
Component: Throttle Position Sensor			
Order	**Item / components and cause likely**	**Verification or maintenance work**	**Method reinstatement**
1	**Condition sensor assembly throttle position.**	**• Check for loose or pressed.** **• Check that the sensor is assembled at the specified position.**	Start the motor It used arlo in idle, and then at high revolutions.
2	Throttle Position Sensor defective.	• Replace the carburetor, if you are defective Refer to "CHECKING POSITION SENSOR ACCELERATOR "on page -43.7	

Symptom: Cable primary ignition coil: open circuit detected.			
Component: Ignition coil			
Order	**Item / components and cause likely**	**Verification or maintenance work**	**Method reinstatement**
1	Connections • Plug the ignition coil (Side of the primary coil) • IDC connector on the harness	• Check the connector terminals and the coupler that may have gone. • Check the lock status connector and the coupler. • If a malfunction, repair and connect the connector and the coupler securely.	Start the motor.
2	Wire harness open or shorted circuit.	• Repair or replace if there is a circuit open or shorted. • Between coil connector on and the CDI coupler / harness main wiring and ground. (Orange-orange)	
3	Faulty ignition coil.	• Test the continuity of the coils primary and secondary. • Replace if defective. See "SYSTEM ON "on page 71. -	

Symptom: Faulty CDI.			
Component: CDI			
Order	**Item / components and cause likely**	**Verification or maintenance work**	**Method reinstatement**
1	Malfunction of CDI.	Replace the CDI **NOTE:** Do not perform this procedure with the main switch to "ON".	Turn the switch main to position "ON".

Downloaded from www.Manualslib.com manuals search engine

Symptom: The signals received from the speed sensor is not normal.			
Component: vehicle speed sensor			
Order	**Item / components and cause likely**	**Verification or maintenance work**	**Method reinstatement**
1	Condition sensor assembly speed.	• Check for loose or pressed.	Start the
2	Connections • speed sensor coupler • Main Cable Coupler harness.	• Check the terminals of the couplers.	and activating motor coupler to the sensor speed, may have left. endo pony • Check the lock status of the operation the vehicle.
3	Open wire or short circuit.	• If a malfunction, repair and connect the coupler securely. • Repair or replace if there is a circuit open or shorted. • Between speed sensor coupler and coupling of the wiring harness.	
4	Speed sensor defective.	• Replace if defective Refer to "CHECKING SPEED SENSOR "on page 7 - 43.	

Downloaded from www.Manualslib.com manuals search engine

ELECTRICAL COMPONENTS

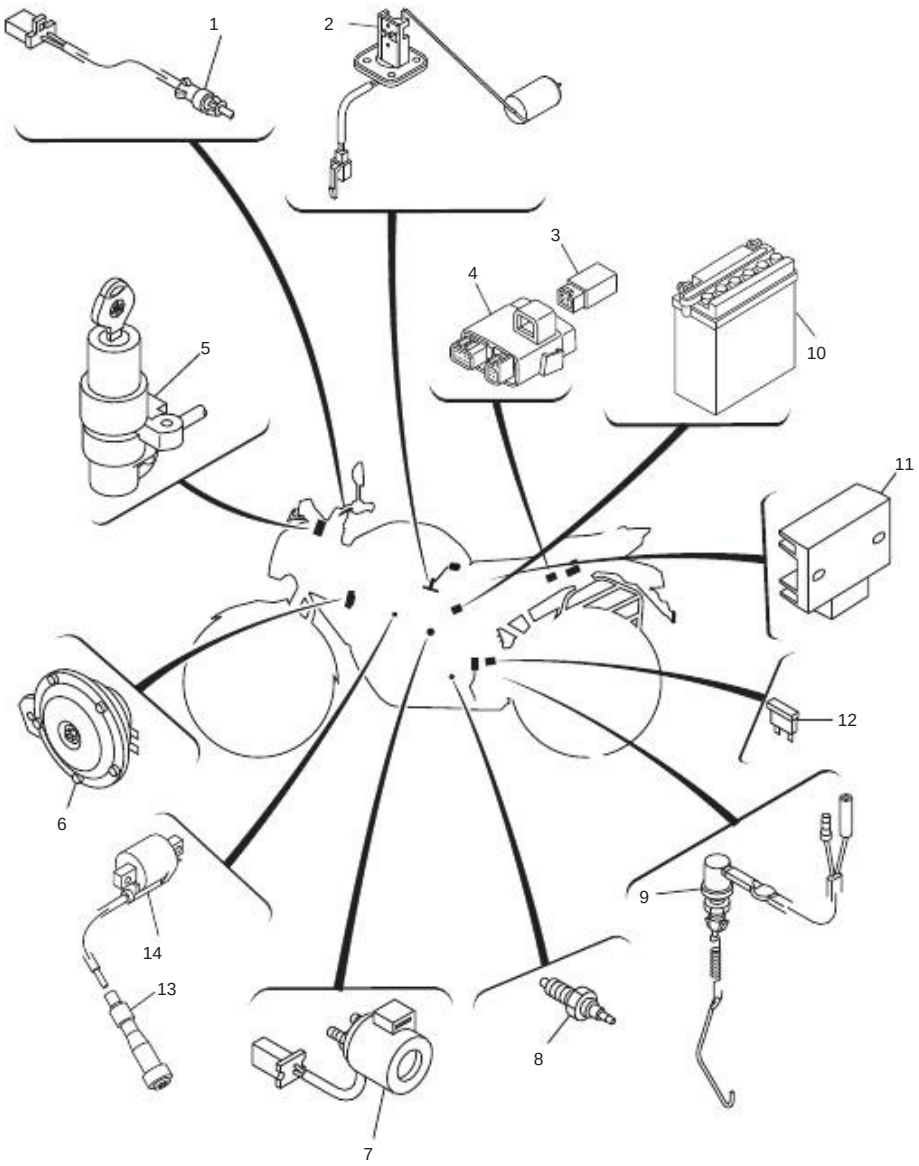

Downloaded from www.Manualslib.com manuals search engine

1. Front brake switch
2. Fuel gauge
3. Starter cut relay
4. CDI
5. Main switch
6. Horn
7. Start relay
8. Neutral switch
9. Rear brake switch
10. Battery
11. Regulator / rectifier
12. Fuse
13. Spark plug cap
14. Ignition coil

Downloaded from www.Manualslib.com manuals search engine

SWITCH INSPECTION

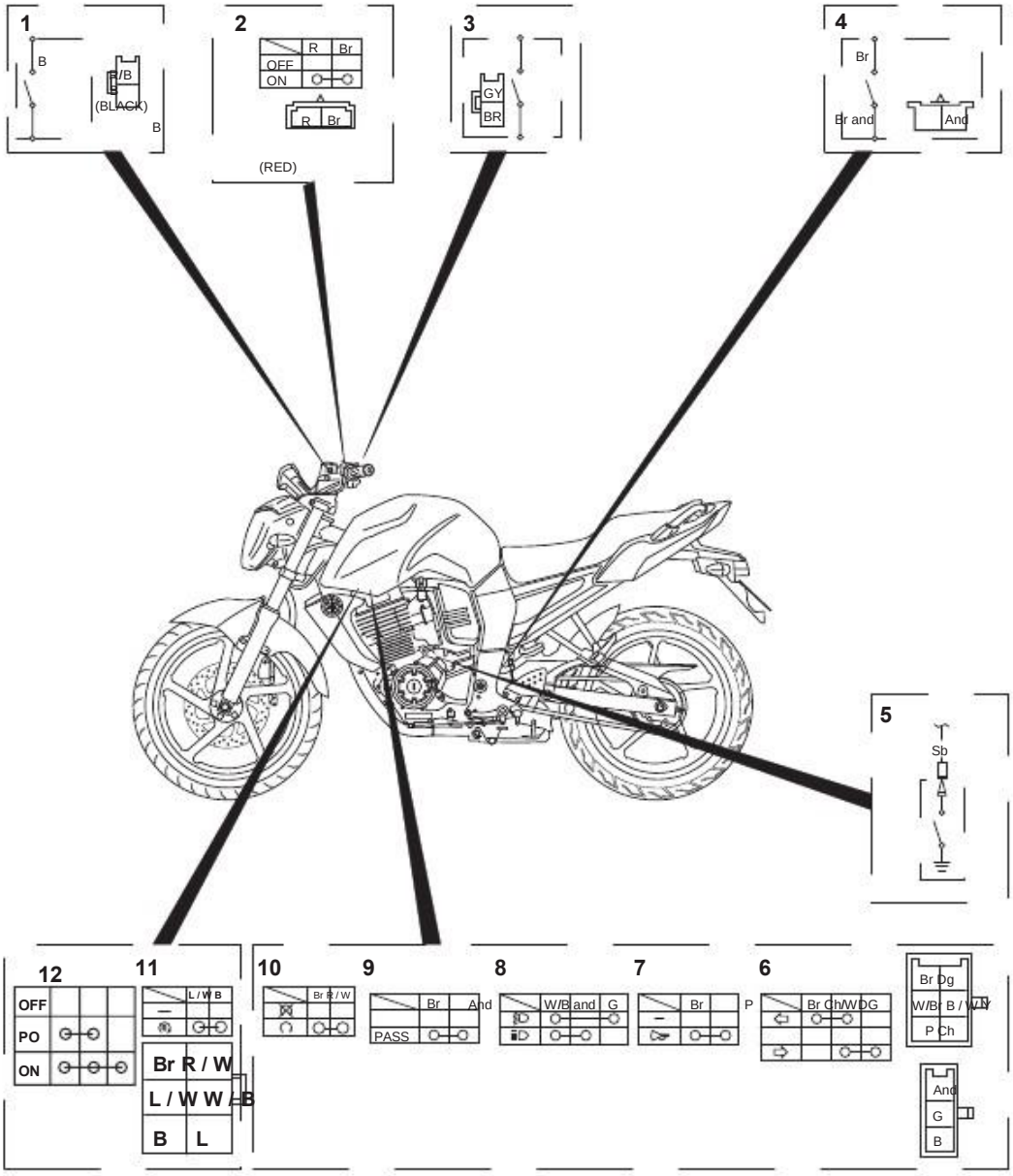

Downloaded from www.Manualslib.com manuals search engine

1. Clutch switch
2. Main switch
3. Front brake switch
4. Rear brake switch
5. Neutral switch
6. Switch turn signal
7. The horn switch
8. Light switch
9. Light Switch step

10. Engine stop switch
11. Start switch
12. Headlight switch

Downloaded from www.Manualslib.com manuals search engine

Check continuity of each circuit with the multimeter. If the reading of continuity is not correct, check the connections, and if necessary, replace the switch.

CAUTION:

Never insert the tester probes into the slots of the coupling terminal "a". Insert the probes provided by the opposite end of the coupler, taking care not loosen or damage the cables.

Multimeter

NOTE:

- Before checking for continuity, set the multimeter in continuity mode.
- When checking the continuity, toggle switch positions several times.

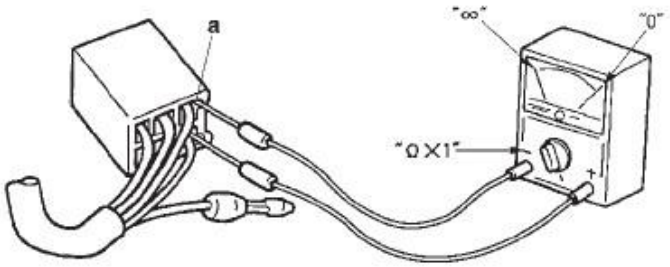

Switches and terminal connections are illustrated in the following example of the main switches.
The "a" are shown in the left column and the switch lead colors "B" are shown in the top row.

Continuity (ie, a closed circuit) between switch terminals is given by the position . "There is continuity between the red and brown / blue when the switch is indicated Estaque! "ON".

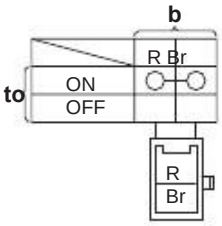

Downloaded from www.Manualslib.com manuals search engine

VERIFICATION OF BULBS AND SOCKETS OF BULBS

Check each bulb and bulb socket damage or wear, proper connections and continuity between the terminals.
Damage / desgasteRepare or replace bulb, the bulb socket or both.
IncorrectaConecte connection correctly.
No continuidadRepare or replace and bulb, the bulb socket or both.

Types of bulbs

The bulbs used in this vehicle shown in the illustration on the left.

- Bulbs "a" and "b" are used for street lamps and typically use a socket to be separated before removing the bulb. Most of these types of bulbs can be removed from their sockets, by turning counterclockwise.

- Bulbs "c", is used for the indicator light turn and tail light / brake lights, and can be removed from the socket by pressing and turning the bulb counter-clockwise.

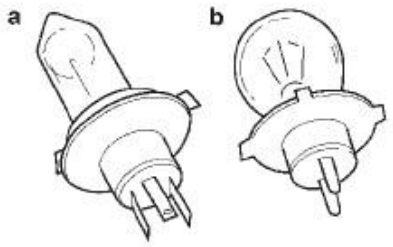

Checking the condition of the bulbs

The following procedure applies to all bulbs.

1. Remove:
   - Bulb

WARNING

Since the lamp bulbs are heated much, keep flammable products and hands away from them until they have cooled.

CAUTION:

- **Be sure to hold the socket firmly bulb when removing the bulb. Never pull the cable, it can not be cut off from the terminal in the coupler.**

- **Avoid touching the glass of a lamp bulb and keep it free from oil, otherwise the transparency of glass, the life of the bulb and the luminous flux will be affected negatively. If the bulb of the lamp is dirty, wipe thoroughly with a cloth moistened with alcohol or lacquer thinner.**

2. Check:
   - Bulb (for continuity)
     (With multimeter)
     No continuity Replace.

	Multimeter

NOTE:

Before checking for continuity, set the multimeter in continuity mode.

a. Connect the positive probe of meter to terminal "1" and the negative probe of the multimeter to terminal "2", and check continuity.
b. Connect the positive probe of meter to terminal "1" and the negative probe of the multimeter to terminal "3", and check continuity.
c. If any of the readings indicate that no continuity, replace the bulb.

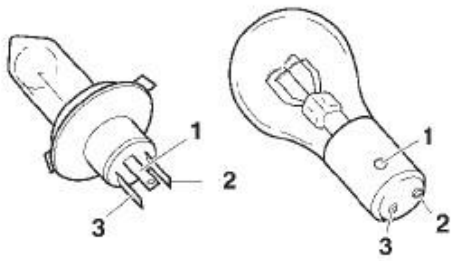

Downloaded from www.Manualslib.com manuals search engine

Checking the status of sockets of bulbs

The following procedure applies to all sockets for light bulbs.

1. Check:
   - bulb socket (for continuity)
     (With multimeter)
     No continuity Replace.

	Multimeter

NOTE:

Check continuity of each socket of the same manner as described in Section the bulb, however, it should be noted the following.

a. Install a good bulb in the socket.
b. Connect the multimeter probes to the respective wires of the socket.
c. Check the continuity of the socket. If any readings indicates no continuity, replace the socket.

CHECKING THE FUSE

CAUTION:

To prevent a short circuit, always place switch to "OFF" when revise or replace a fuse.

1. Remove:
   - Seat and right side cover
     Refer to "GENERAL CHASSIS" on page 4-1.

2. Check:
   - Fuse

a. Connect the multimeter and check the fuse continuity.

NOTE:

Set the multimeter to "Ù × 1".

	Multimeter

b. If the meter shows "", replace the fuse.

3. Replace:
   - Blown fuse

a. Set the main switch to "OFF".
b. Install a new fuse of the correct amperage.
c. Setting the switches to verify if the electrical circuit is operating.
d. If the fuse immediately remelted, check the electrical circuit.

Article	Classification Amount Amperage	
Fuse	15 A	1

WARNING

Never use a fuse with an amperage other than specified. Improvising or using an incorrect amperage fuse may cause serious damage to the electrical system, cause a malfunction in the lighting and ignition systems, and could cause a fire.

4. Install:
   - Seat and right cover
     Refer to "GENERAL CHASSIS" on page 4-1.

CHECKING AND CHARGING

WARNING

Batteries generate explosive hydrogen gas and contain electrolyte which is toxic and acid highly caustic sulfuric acid. Therefore, respecting Always observe the following preventive measures:

- **Wear eye protection when handling or working near batteries.**
- **Charge batteries in a well ventilated area.**
- **Keep batteries away from heat, sparks or flames (eg welding equipment, cigarettes).**
- **Do not smoke while charging or handling batteries.**
- **Keep batteries and electrolyte OUT OF REACH OF CHILDREN.**
- **Avoid body contact with the electrolyte, and which can cause severe burns or injuries permanent eye.**

FIRST AID IF IN BODY:

EXTERNAL

- **Skin - Wash with water.**
- **Eyes - Flush with water for 15 minutes and get immediate medical attention.**

Downloaded from www.Manualslib.com manuals search engine

INTERNAL
• Drink plenty of water or milk followed by milk of magnesia, beaten eggs or vegetable oil. Get medical attention immediately.

1. Remove:
•Seat and right side cover
Refer to "GENERAL CHASSIS" on page 4-1.
2. Disconnect:
•Battery cables
(Since the battery terminals)

CAUTION:

First, disconnect the negative cable Battery "1", then the positive Battery "2".

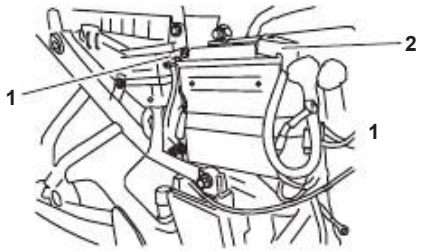

3. Remove:
•Battery
4. Check:
•Battery voltage
•Level of electrolyte in the battery cell
•Charging the battery

a.Conecte a multimeter to the terminals battery.
•Positive probe of the multimeter
Positive battery terminal
•Negative probe of the multimeter
Negative battery terminal

NOTE:

The state of charge of the battery can be checked by measuring the voltage open circuit (ie the voltage when the positive battery terminal is disconnected). No need to charge when the voltage of open circuit is less than 12.8 V.

b.Verificar charging the battery as shown in the graphs and the following example.

Example
Open circuit voltage = 12.0 V
Charging time = 5-10 hours
Charging the battery = 20-30%

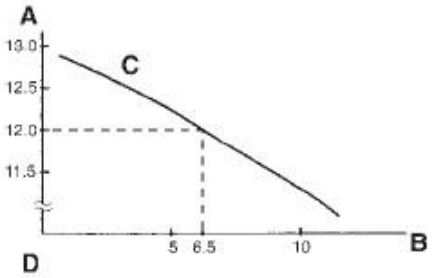

A. Open circuit voltage (V)
B. Charging time (hours)
C. Relationship between the open circuit voltage and the charging time at 20 ° C (68 ° F)
D. These values vary with temperature, state of the battery plates and the level the electrolyte.

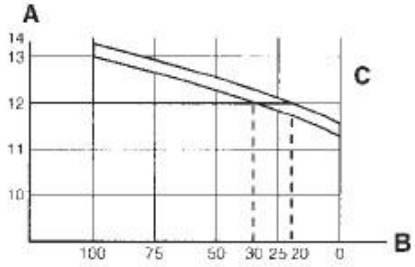

A. Open circuit voltage (V)
B. Loading condition of the battery (%)
C. Temperature 20 ° C (68 ° F)

5. Load:
•Battery
(See illustration of the proper method load)

Downloaded from www.Manualslib.com manuals search engine

WARNING

Do not charge a battery quickly.

CAUTION:

- **Do not use a battery charger charging fast, as it forces a high amperage the battery quickly and can cause overheating and damage to the plates battery.**
- **If it is impossible to regulate the load current in the battery charger, be careful not to overload the battery.**
- **When charging a battery, make sure remove the vehicle. (If the load, mounted in the vehicle, disconnect the negative cable terminal of the battery.)**
- **To reduce the risk of sparks, do not connect the battery charger until the cables battery charger connected to the battery.**
- **Before removing the charger cables batteries, battery terminals, sure to turn off the battery charger.**
- **Make sure the charger cables batteries are properly connected to the terminal battery and are not shorted.**
- **A charger with corroded wires can generate heat in the contact area and a weak caliper can cause arcing.**
- **If the battery becomes hot to the touch, in any time during the charging process, disconnect the battery charger and let the battery to cool before re-**
- **connecting. A warm battery can explode!**

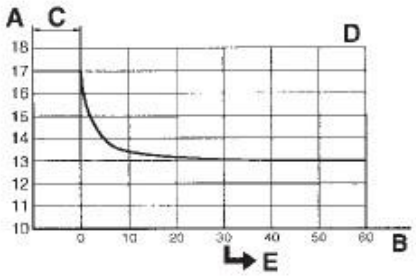

A. Open circuit voltage (V)
B. Time (minutes)
C. Load
D. Temperature 20 ° C (68 ° F)
E. Check the open circuit voltage.

Charging method with a charger current (voltage) variable

a. Measuring open circuit voltage before to loading.

NOTE:

The voltage must be measured after 30 minutes without using the battery.

b. Connect a charger and an ammeter to battery and start charging.

c. Make sure the power is higher than the standard load current written in the battery.

NOTE:

If the load current is less than the charge level written in the battery, the voltage adjustment of the load 20-24 V and track the amperage during 3-5 minutes to check the battery.

- If the load current standard was achieved by the battery is good.
- If the load current standard was not achieved by the battery replace the battery.

d. Adjust the voltage level so that it reaches the normal load.

e. Set the time, according to the time the proper charge voltage for open circuit.

f. If the load requires more than 5 hours, it is advisable controlling the charge current after 5 hours. If there is any change in amperage, re-adjust the voltage until the charge level standard.

g. Measuring the charging voltage in open circuit the battery, after having been out of use over 30 minutes.

12.8 V or more --- Charging complete.
12.7 V or less --- Recharging is required.
Under 12.0 V --- Replace the battery.

Downloaded from www.Manualslib.com manuals search engine

▼▼▼▼▼▼▼▼▼▼▼▼▼▼▼▼▼▼▼▼▼▼▼▼▼▼▼▼▼▼▼▼

Charging method with a charging voltage constant

a. Measuring open circuit voltage before upload.

NOTE:

The voltage must be measured after 30 minutes without using the battery.

b. Connect a charger and an ammeter to battery and start charging.

c. Make sure the power is higher than the standard load current written in the battery.

NOTE:

If the load current is below the level of written on the battery charge, this type of charger battery can not charge the MF battery. It recommends a variable voltage charger.

d. Charge the battery until the charging voltage battery is 15 V.

NOTE:

Adjust the charging time to 20 hours (maximum).

e. Measuring the charging voltage in open circuit battery, after having been without use for more than 30 minutes.

12.8 V or more --- Charging complete. 12.7 V or less --- Recharging is required. Under 12.0 V --- Replace the battery.

▲▲▲▲▲▲▲▲▲▲▲▲▲▲▲▲▲▲▲▲▲▲▲▲▲▲▲▲▲▲▲▲

6. Install:
•Battery
7. Connect:
•Battery cables
(To the terminals of the battery)

CAUTION

First, connect the positive battery "1", then the negative cable from the battery "2".

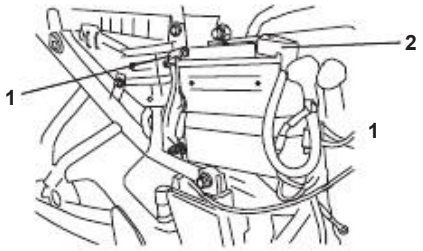

8. Check:
•Battery terminals
Sulfation→Clean with hot water.
Connect loose connection correctly.
9. Lubricate:
•Battery terminals

	Recommended lubricant **Dielectric grease**

10.Instalar:
• Seat and right side cover
Refer to "GENERAL CHASSIS" on page 4-1.

CHECKING THE RELAYS

Check continuity of each switch pocket tester. If the reading of continuity is incorrect, replace the relay.

	Multimeter

1. Disconnect the relay set of wires harness.
2. Connect the multimeter (Ù × 1) and the terminal battery (12 V) to relay terminal as shows. Check the operation of the relay. Replace out of specification.

Start relay

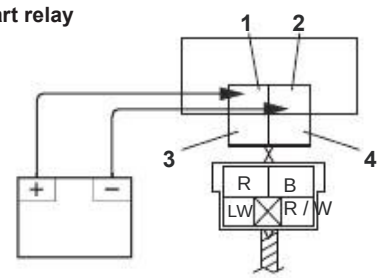

1. Positive battery terminal
2. Negative battery terminal
3. Tester positive probe
4. Tester negative probe

	Result **Continuity** **(Between "3" and "4")**

Downloaded from www.Manualslib.com manuals search engine

Starter cut relay

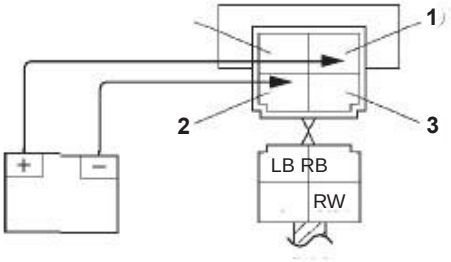

1. Positive battery terminal
2. Negative battery terminal
3. Tester positive probe
4. Tester negative probe

Result
Continuity
(Between "1" and "3")

VERIFICATION OF SIGNAL RELAY GIRO

1. Check:
   - Input voltage relay turn signal
     Off-specification circuit from the switch to the relay coupler turn signal is defective and must be repaired.

Input voltage of the relay
Turn signal 12 V DC

a. Connect the multimeter to the relay terminal turn signal, as shown.

Multimeter

- Tester positive probe
  coffee "1"
- Tester negative probe
  land

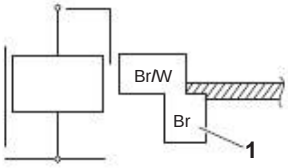

b. Turn the main switch to "ON".
c. Measuring the input voltage signal relay of rotation.

Output voltage relay
Turn signal 12 V DC

2. Check:
   - The output voltage relay turn signal.
     Replace out of specification.

a. Connect the multimeter to the relay terminal turn signal, as shown.

Multimeter

- Tester positive probe
  brown / white "1"
- Tester negative probe
  land

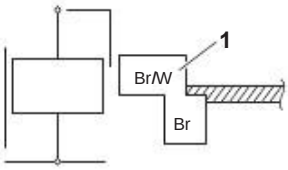

b. Turn the switch to "ON".
c. Measuring the output voltage signal relay of rotation.

Downloaded from www.Manualslib.com manuals search engine

CHECKING THE SPARK PLUG HOOD

1.Check:
- plug cap resistance
  Replace out of specification.

	Plug cap resistance **Ku 5.0 at 20 ° C (68 ° F)**

a. Remove the cap from the spark plug wire plug.
b. Connect the multimeter (Ù × 1k) to cap the spark plug as shown.

	Multimeter

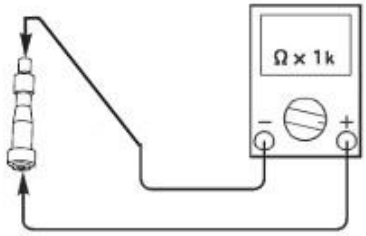

c. Measure the resistance of the spark plug cap.

CHECKING THE IGNITION COIL

1.Check:
- Primary coil resistance
  Replace out of specification.

	Primary coil resistance **Ù 0.32 to 0.48 at 20 ° C (68 ° F)**

a. Disconnect the coil connectors ignition of the coil terminals lit.
b. Connect the multimeter (Ù × 1) to the coil on, as shown.

	Multimeter

- Tester positive probe
  orange "1"
- Tester negative probe
  land "2"

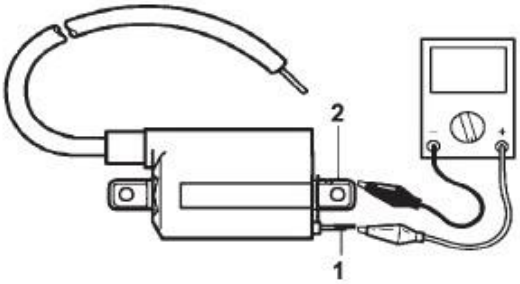

c. Measuring the resistance of the secondary coil.

2.Check:
- Resistance of the secondary coil
  Replace out of specification.

	Secondary coil resistance **Ku 5.68-8.52 at 20 ° C (68 ° F)**

a. Disconnect the spark plug cap from the ignition coil.
b. Connect the multimeter (Ù × 1k) to the coil on, as shown.

	Multimeter

Downloaded from www.Manualslib.com manuals search engine

• Tester positive probe
High voltage cable
• Tester negative probe
land

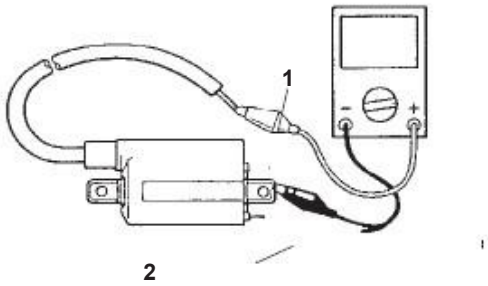

c. Measuring the resistance of the secondary coil.

VERIFICATION OF THE DISTANCE BETWEEN SPARK PLUG ELECTRODE

1. Check:
• Distance between electrodes of the spark plug
Out of specification Make the solution of power system problems, starting with step 5. See "TROUBLESHOOTING" on page 7-3.

Minimum distance between electrodes from 0.8 to 0.9 mm plug

NOTE:

If the distance between electrodes of the spark plug is within specifications, the circuit ignition system is working normally.

a. Disconnect the spark plug cap from spark plug.
b. Connect the dynamic spark tester "1" as shown.

Dynamic spark tester

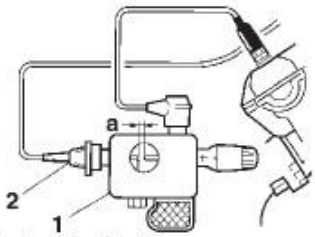

1. Dynamic spark tester
2. Spark plug cap

c. Turn the main switch to "ON" and the engine stop switch to position ! "
d. Measuring the distance from spark ignition "a".
e. Start the engine by pushing the switch Start! "

VERIFICATION OF THE POSITION SENSOR CRANKSHAFT

1 .. Disconnect:
• coupler crankshaft position sensor
(From the wiring harness)
2.Check:
• Reliability of crankshaft position sensor
Off-specification position sensor
Crankshaft / stator assembly.

Position sensor resistance
Ù 192-288 crankshaft at 20 ° C (68 ° F)

a. Connect the multimeter to the sensor coupler crankshaft position, as shown.

Multimeter

• Tester positive probe
blue / yellow "1"
• Tester negative probe
green "2"

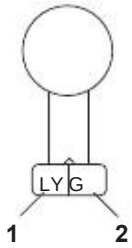

b. Measuring the resistance of position sensor crankshaft.

VERIFICATION OF OPERATION STARTER

1.Check:
• Operation of starter
Do not work troubleshooting electric start, beginning with the Step 4. See "SOLUTION Problems "on page 7-9.

Downloaded from www.Manualslib.com manuals search engine

a. Connect the positive battery terminal "1" and the starter cable "2" with a jumper cable "3".

WARNING

- **The cable used for the bridge should have at least the same capacity of the cable battery, otherwise, the cable bridge will burn.**
- **This check is likely to cause sparks, therefore make sure that there is gas or flammable liquid around.**

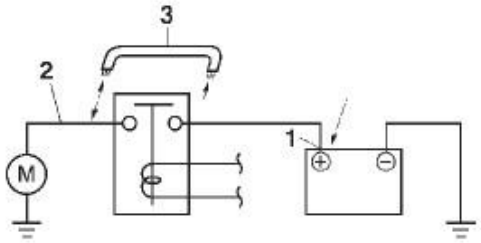

b. Check the operation of motor boot.

CHECKING THE STATOR COIL

1.Desconectar:

CCoupling the stator coil (From the wiring harness)

2.Check:

•Resistance of the stator coil
Out of specification Replace the sensor crankshaft position / stator assembly.

	Resistance of the stator coil **Ù 0464-0696 at 20 ° C (68 ° F)**

a. Connect the multimeter (Ù × 1) in the coupler stator coil, as shown.

	Multimeter

•Tester positive probe
white "1"
•Tester negative probe
White "2"

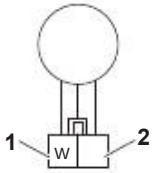

b. Measuring the resistance of the stator coil.

VERIFICATION
REGULATOR / RECTIFIER

1.Check:

•Charging voltage
Out of specification Replace regulator / rectifier.

	Charging voltage **13.7-14.7 V at 5000 r / min**

a. Connect the engine tachometer cable plug.
b. Connect the multimeter to the coupler regulator / rectifier, as shown.

	Multimeter

•Tester positive probe
red "1"
•Tester negative probe
black "2"

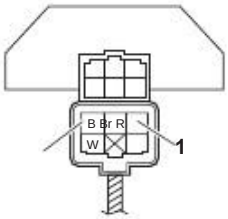

c. Start the engine and let it run in about 5000 r / min.
d. Measure the charging voltage.

Downloaded from www.Manualslib.com manuals search engine

SPEAKER VERIFICATION

1.Check:
- Resistance of the horn
  Replace out of specification

	Coil resistance **Ù 1.95-2.25 at 20 ° C**

a. Disconnect the connectors on the horn of the the speaker terminals.
b. Connect the multimeter (Ù × 1) to terminals of the horn.

	Multimeter

- Tester positive probe terminal of the horn "1"
- Tester negative probe terminal of the horn "2"

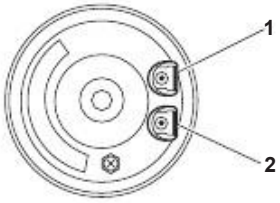

c. Measure the resistance of the horn.
2. Check:
- Sound the horn
  Adjust or replace defective sound.

a. Connect a battery (12 V) to the speaker.
b. Turn the adjusting screw in direction "a" or "B" until the specific sound is obtained.

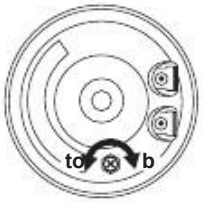

VERIFICATION METER
FUEL

1. Remove:
- Fuel tank

2. Remove:
- Fuel gauge

3. Check:
- Fuel gauge resistance
  Out of specification Replace fuel gauge

	Fuel gauge **Resistance of the meter unit (full)** **Ù -21.5 18.5 at 20 ° C (68 ° F)** **Resistance of the meter unit (empty)** **Ù 137-143 at 20 ° C (68 ° F)**

a. Connect the multimeter (Ù × 100) in the coupler fuel gauge, as shown

	Multimeter

- Tester positive probe orange / white "1"
- Tester negative probe green / black "2"

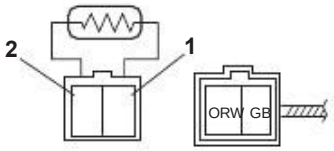

b. Move the fuel gauge float the level of minimum and maximum.
c. Measuring the resistance of the fuel gauge.

Downloaded from www.Manualslib.com manuals search engine

VERIFICATION OF POSITION SENSOR THROTTLE

1. Check:
   - Throttle Position Sensor

a. Connect the digital circuit tester to terminals throttle sensor body, as shown.

- Tester positive probe
  Blue terminal "1
- Tester negative probe
  black / blue terminal "2"

b. Measuring the input voltage sensor throttle position.
Out of specification Replace or repair harness wires.
Connect the multimeter to the terminals of the body throttle sensor, as shown.

- Tester positive probe
  blue "1"
- Tester negative probe
  black / blue terminal "2"

Input voltage sensor throttle position 5V (Azul-negro/azul)

d. Slowly open the throttle,
check that the voltage sensor output throttle position, increase.
The voltage does not change or changes abruptly
Replace the throttle body.
Out of Specification (closed)
Replace the carburetor.

Output voltage of the sensor throttle position (position closed) 0.65 to 0.75 V (Amarillo-negro/azul)

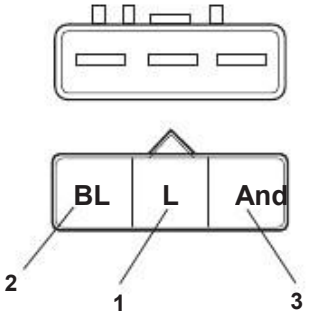

CHECKING THE SPEED SENSOR

1. Check:
   - Output voltage of the speed sensor
     Replace out of specification.

Reading cycle of the output voltage 0 V to 5.0 V to 0 V to 5.0 V

a. Connect the multimeter to the sensor coupler speed (at the end of the wire harness) as shows.

Multimeter

- Tester positive probe
  white "1"
- Tester negative probe
  blue / black "2"

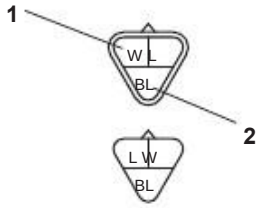

b. Adjust the position of the main switch to "ON".
c. Raise the front wheel and turn slowly.
d. Measure the voltage of white and blue / black.
With each complete rotation of the front wheel, cycle voltage readings should be 0 V to 5.0 V to 0 V to 5.0 V.

Downloaded from www.Manualslib.com manuals search engine

TROUBLESHOOTING

TROUBLESHOOTING 8-1
GENERAL INFORMATION 8-1
POWER FAILURE 8-1
INCORRECT ENGINE IDLE 8-1
PERFORMANCE POOR MEDIUM AND HIGH SPEED 8-2
FAILURE OF BIO MARCHASCAM 8-2
SHIFT PEDAL DOES NOT MOVE 8-2
SKIP GEARS 8-2
CLUTCH FAILURE 8-2
OVERHEATING 8-2
Supercooling 8-3
POOR PERFORMANCE ELFRENADO 8-3
FAILURE OF THE FRONT FORK 8-3
UNSTABLE HANDLING 8-3
FAILURE OF SIGNALLING OR LIGHTING SYSTEM 8-4
WIRING DIAGRAM 8-5

Downloaded from www.Manualslib.com manuals search engine

TROUBLESHOOTING

GENERAL INFORMATION

NOTE:

The following guide for troubleshooting does not cover all possible causes. It should be useful, however, as a basic guide to the troubleshooting. See the procedure this time on manual checks, adjustments and parts replacement.

STARTING FAILURES

Engine

1. Cylinder and cylinder head
 •Loose spark plug
 •Cylinder head or loose
 •Damage to the cylinder head gasket
 •Damaged cylinder gasket
 •Worn or damaged cylinder
 •Bad valve lash adjustment
 •Valve not closed
 •Improper seating of the valve
 •Improper synchronism valve
 •Defective valve spring
 •Stiff valve
2. Piston and piston rings
 •Improperly installed piston rings
 •Damage, wear or fatigue on the piston rings
 •Knotted rings
 •Damaged or seized piston
3. Air filter
 •Improperly installed air filter
 •Air filter element clogged
4. Crankcase and crankshaft
 •Incorrect assembly of the housing
 •Stiff crankshaft

Fuel System

1. Fuel tank
 •Empty fuel tank
 •Fuel filter clogging
 •Deteriorated or contaminated fuel
2. Carburetor
 •Deteriorated or contaminated fuel
 •Clogged fuel pump
 •Carburetor out of adjustment

Electrical System

1. Battery
 •Discharged battery
 •Battery failure
2. Fuse
 •Fuse, damaged or incorrect
 •Fuse improperly installed
3. Plug
 •Incorrect spark plug cap
 •Heat range spark plug incorrect
 •Spark plug faulty
 •Worn or damaged electrode
 •Worn or damaged insulation
 •Faulty spark plug cap
4. Ignition coil
 •Body of the ignition coil with cracks or fractured
 •Primary or secondary coils fractured or
 •short circuit
 Faulty spark plug wire

Ystem 5.S Power
 •Defective CDI
 •Crankshaft position sensor faulty
 •Rotor magnet or pin broken

6. Switches and wiring
 •Switches and wiring
 •Main switch defective
 •Engine stop switch defective
 •Broken or shorted wiring
 Neutral switch defective
 •Starter switch defective
 •Defective clutch switch
 •Grounding the circuit
 •Loose
7. Starting System
 •Starter defective
 •Start relay defective
 •Cut-off relay defective ignition
 •Faulty starter clutch

Improper engine idling

1. Cylinder and cylinder head
 •Bad valve lash adjustment
 •Valve train components damaged
2. Air filter
 •Air filter element clogged

Fuel System

1.Carburador
 •Union carburetor loose or damaged
 •Free game accelerator cable inappropriate
 •Flooded carburetor
 •Air Induction System defective

Downloaded from www.Manualslib.com manuals search engine

Electrical System
1. Battery
•Discharged battery
•Defective battery
2. Plug
•Electrode gap of spark plug incorrect
•Heat range spark plug incorrect
•Spark plug faulty
•Worn or damaged electrode
•Worn or damaged insulation
•Faulty spark plug cap
3. Ignition coil
•Primary or secondary coils fractured or short circuit
•Faulty spark plug wire
•Ignition coil cracked or fractured
4. Ignition system
•Defective CDI
•Crankshaft position sensor faulty
•Rotor magnet or pin broken

POOR PERFORMANCE IN MIDDLE AND HIGH SPEED
Refer to "STARTING FAILURES" on page 8-1.

Engine
1. Air filter
•Air filter element clogged

Fuel System
1. Carburetor
•Defective carburetor

FAILURE TO GEAR

Changing gear is difficult
See "Drag clutch."

SHIFT PEDAL DOES NOT MOVE

Axis changes
•Bent shift shaft

Drum changes and forks
•Foreign body in a drum groove changes
•Shift fork stuck
•Guide bar bent shift fork

Transmission
•Transmission gear stuck
•Foreign objects between the wheels of transmission
•Incorrect assembly of the transmission

SKIP GEARS

Axis changes
•Pedal position error changes
•The top of the lever returns so incorrect

Forks of changes
•Worn shift fork

Shift drum
•Axial incorrect
•Treadwear drum changes

Transmission
•Wear lace Gear

CLUTCH FAILURE

Clutch slips
1. Clutch
•Improper clutch assembly
•Incorrect cable free play
•Clutch spring fatigued or weak
•Wear of the friction discs
•Wear of the clutch plates
2. Engine Oil
•Improper oil level
•Improper oil viscosity (low)
•Oil deterioration

Clutch Drag
1. Clutch
•Uneven tension clutch springs
•Warped pressure plate
•Bent clutch disc
•Friction disc swelling
•Clutch push rod bent
•Fractured disc holder
•Primary gear bushing burned
2. Engine Oil
•Improper oil level
•Improper oil viscosity (High)
•Oil deterioration

OVERHEATING

Ignition system
• Electrode gap of spark plug incorrect
•Heat range spark plug incorrect
•Defective CDI

Downloaded from www.Manualslib.com manuals search engine

Fuel System
- Improper carburetor adjustment
- Setting the wrong fuel level
- Blocked air filter element

Compression System
- Many carbon deposition
- Improperly adjusted valve timing
- Bad valve clearance adjusted

Engine Oil
- Improper oil level
- Oil quality incorrect
- Low oil

Fuel System
1. Throttle body
- Damaged or loose throttle union

2. Air filter
- The air filter element is clogged

Chassis
1. Brake (s)
- Drag Brake

Electrical System
1. Plug
- Electrode gap of spark plug incorrect
- Heat range spark plug incorrect

2. Ignition system
- Defective CDI

Overcooling

Refrigeration system
1. Thermostat
- The thermostat is open

POOR PERFORMANCE BRAKE
1. Disc brake
- Worn brake pads
- Brake disc wear
- Air in hydraulic brake system
- Loss of brake fluid
- Failure in the whole caliper
- Seal failure of the brake caliper
- Coupling screws loose
- Damage the brake hose
- Grease or oil on brake disc
- Grease or oil on brake pads
- Brake fluid level incorrect

FAILURE OF THE FRONT FORK

Oil leak
- Tube bent, damaged or corroded
- Broken or damaged outer tube
- Improperly installed oil seal
- Edges of the damaged oil seal
- Incorrect oil level (high)
- Screw loose cushion rod
- Copper washer damper rod damaged
- O-ring screw cap damaged

Malfunction
- Bent or damaged inner tube
- Bent or damaged outer tube
- Damaged fork spring
- Damper rod bent or damaged
- Incorrect oil viscosity
- Improper oil level

UNSTABLE HANDLING
1. Handlebar
- Folded or incorrectly installed the handlebars

2. Components of the steering column
- Poorly installed upper bracket
- Improperly installed lower bracket (Improperly tightened ring nut)
- Stem bending direction
- Ball bearings or damaged tracks

3. Bar (s) of the front fork
- Uneven oil levels (both bars Front fork)
- Uneven spring tension (both Front fork bars)
- Broken fork spring
- Bent or damaged inner tube
- Outer tube bent or dañad

4. Tilt
- Bearing wear
- Swingarm bent or damaged

Downloaded from www.Manualslib.com manuals search engine

5. Rear Shock
•Faulty rear shock spring
•Oil loss
6. Tire (s)
•Uneven tire pressure (front and rear)
•Incorrect tire pressure
•Uneven wear of the tire
7. Wheel (s)
•Incorrect wheel balance weights
•Deformation of the cast wheel
•Damage to wheel bearings
•Wheel axle loose or bent
•Excessive deformation of the wheels
8.Chasis
•Chassis folded
•Pipe damaged the steering column
•Improperly installed bearing race

FAILURE OF LIGHTING SYSTEM O SIGNALING

The front light is not lit
•Incorrect lamp bulb
•Many electrical accessories
•Hard to charge
•Bad connection
•Grounding the circuit
•Bad contact (switch or the light)
•Lamp bulb cast

Lamp bulb cast
•Incorrect lamp bulb
•Battery failure
•Failure of the regulator / rectifier
•Grounding the circuit
•Main switch defective
•Faulty Light Switch
•Due to the length of the bulb streetlight

Tail / brake light does not light
•Bulb taillight / brake incorrect
•Many electrical accessories
•Bad connection
•Bulb taillight / brake light cast

Bulb taillight / brake light cast
•Bulb taillight / brake incorrect
•Battery failure
•Rear light switch / brake light incorrectly adjusted
•Due to the length of the light bulb Tail / brake light

Light of the turn signal is not lit
•Turn signal switch defective
•Turn signal relay defective
•Light bulb turning molten
•Bad connection
•Damaged or faulty wiring harness
•Grounding the circuit
•Battery failure
•Fuse broken, damaged or incorrect

Light turn signal flashes slowly
•Turn signal relay defective
•Main switch defective
•Turn signal switch defective
•Turn signal bulb incorrect

Signal light remains on rotation
•Turn signal relay defective
•Light bulb turning molten

Light turn signal flashes rapidly
•Turn signal bulb incorrect
•Turn signal relay defective
•Light bulb turning molten

Horn does not sound
•Horn maladjusted
•Damaged or defective horn
•Main switch defective
•Defective horn switch
•Battery failure
•Fuse broken, damaged or incorrect
•Damaged or faulty wiring harness

Downloaded from www.Manualslib.com manuals search engine

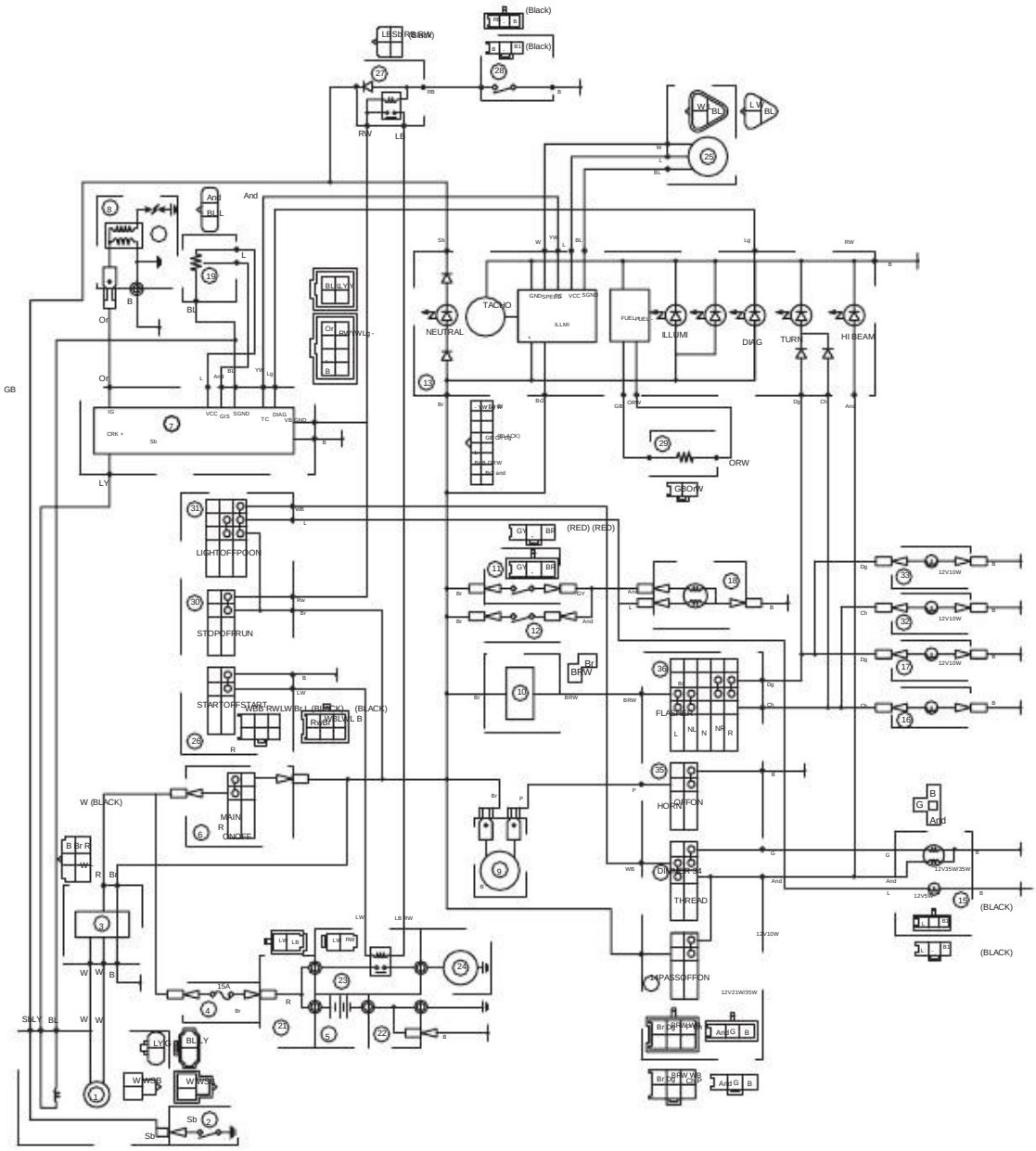

Downloaded from www.Manualslib.com manuals search engine

FZ-16

1. Magneto CA
2. Neutral switch
3. Regulator / Rectifier
4. Main fuse
5. Battery
6. Main switch
7. CDI
8. Ignition coil
9. Horn
10. Relay turn signal
11. Front brake switch
12. Rear brake switch
13. Meter
14. Light Switch step
15. Streetlight
16. Headlight turn indicator (L / H)
17. Headlight turn indicator (R / H)
18. Taillight
19. TPS
21. Cable Positive +
22. Negative cable -
23. Starter relay
24. Starter
25. Speed sensor
26. Start switch
27. Starter cut relay
28. Clutch switch
29. Fuel gauge
30. Engine stop switch
31. Headlight switch
32. Backlight turn indicator (L / H)
33. Backlight turn indicator (R / H)
34. Light switch
35. The horn switch
36. Switch turn signal

COLOR CODE

B Black
Coffee Br
ChChocolate
Dark green Dg
G Green
GyGris
L Blue
LgVerde clear
Or Orange
P Rosa
Red R
Blue sky Sb
W White
And Yellow
B / L Black / Blue
Br / L Brown / Blue
Br / W Brown / White
G / R Green / Red
G / W Green / White
G / Y Green / Yellow
L / B Blue / Black
L / W Blue / White
O / B Orange / Black
P / W Pink / White
R / B Red / Black
R / L Red / Blue
R / W Red / White
W / Y White / Yellow
Y / G Yellow / Green
Y / L Yellow / Blue
Y / R Yellow / Red

Downloaded from www.Manualslib.com manuals search engine