AIR CONDITIONING

2.3L

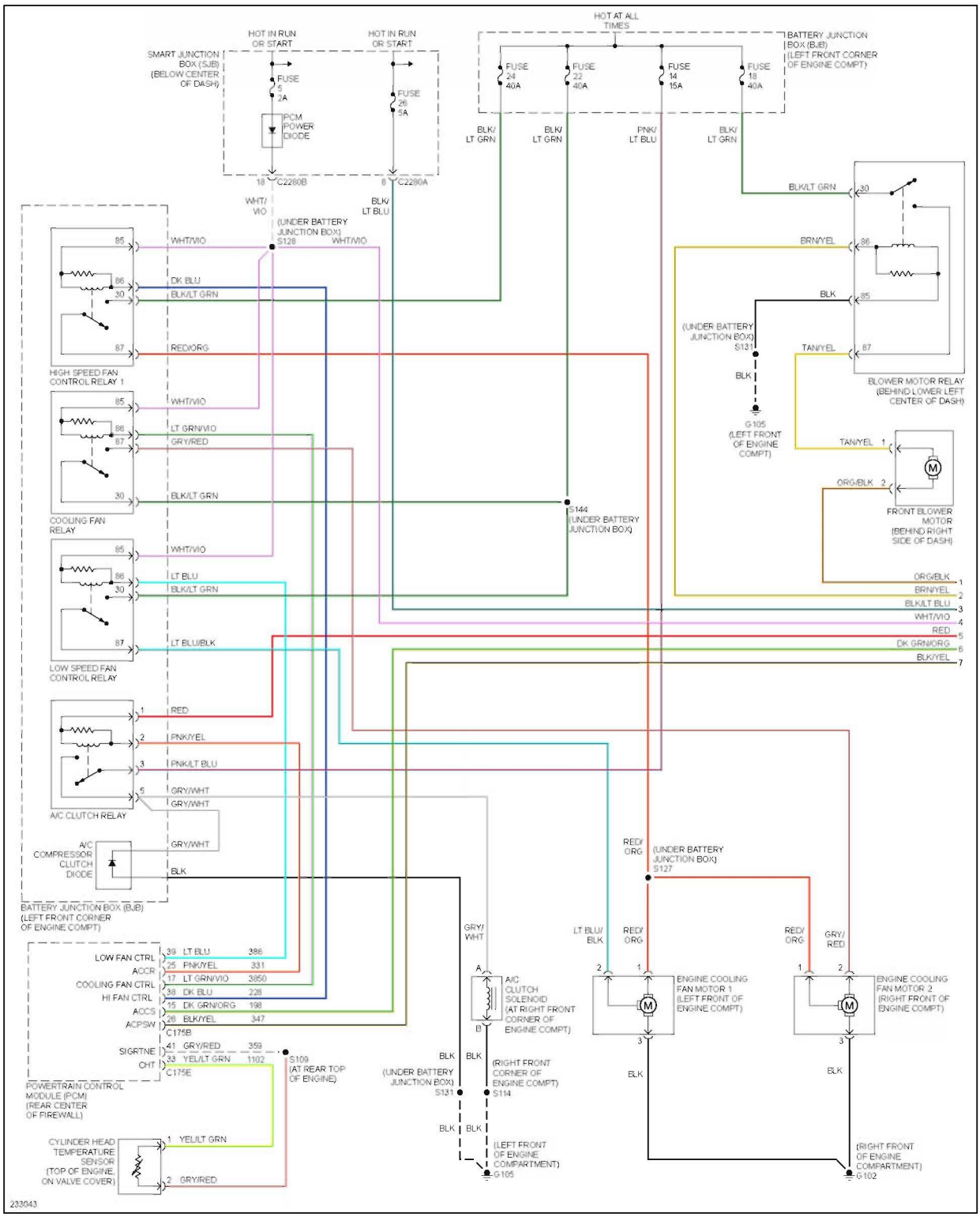

Fig. 1: 2.3L, Manual A/C Circuit, Except Hybrid (1 of 2)

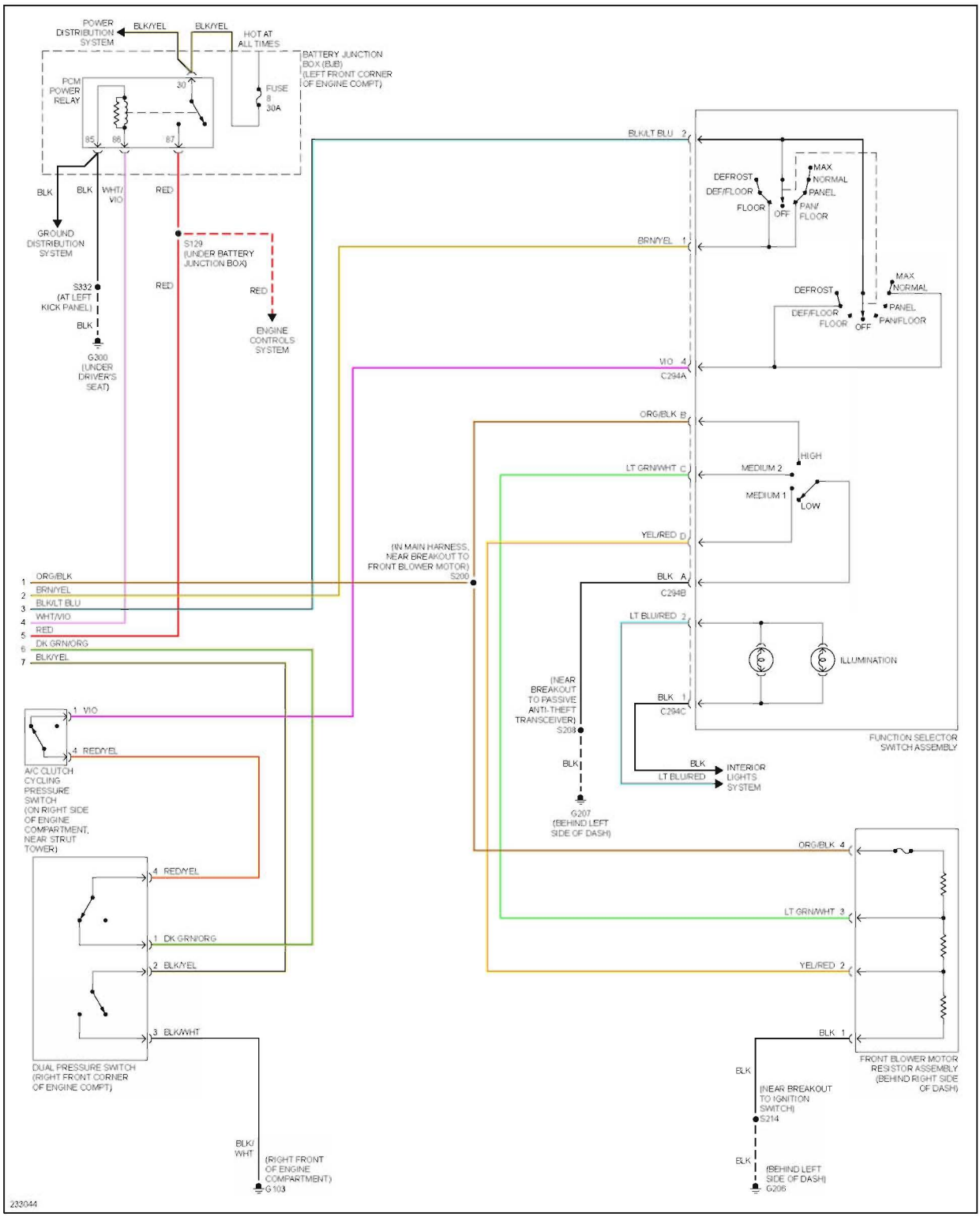

Fig. 2: 2.3L, Manual A/C Circuit, Except Hybrid (2 of 2)

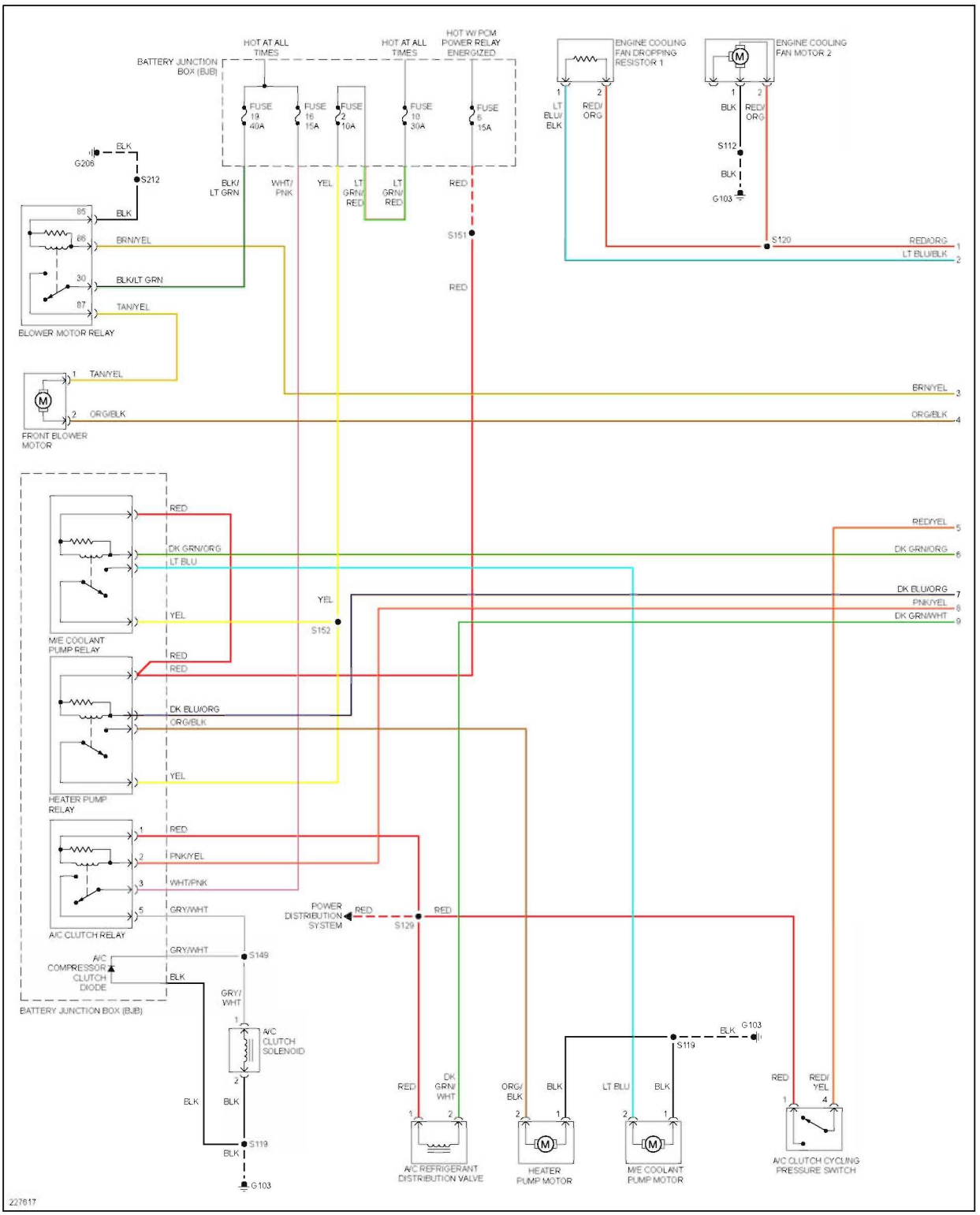

Fig. 3: 2.3L, Manual A/C Circuit, Hybrid (1 of 3)

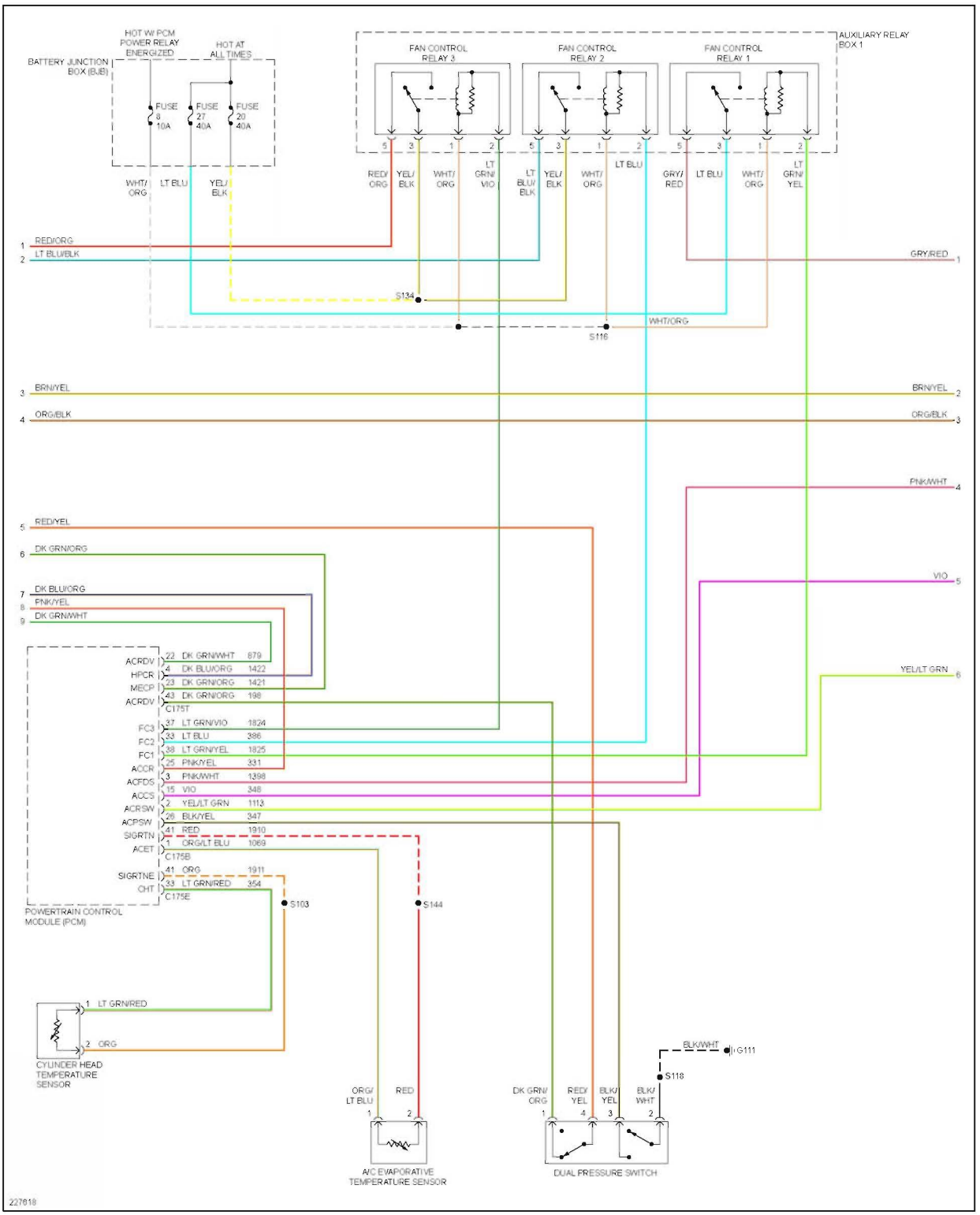

Fig. 4: 2.3L, Manual A/C Circuit, Hybrid (2 of 3)

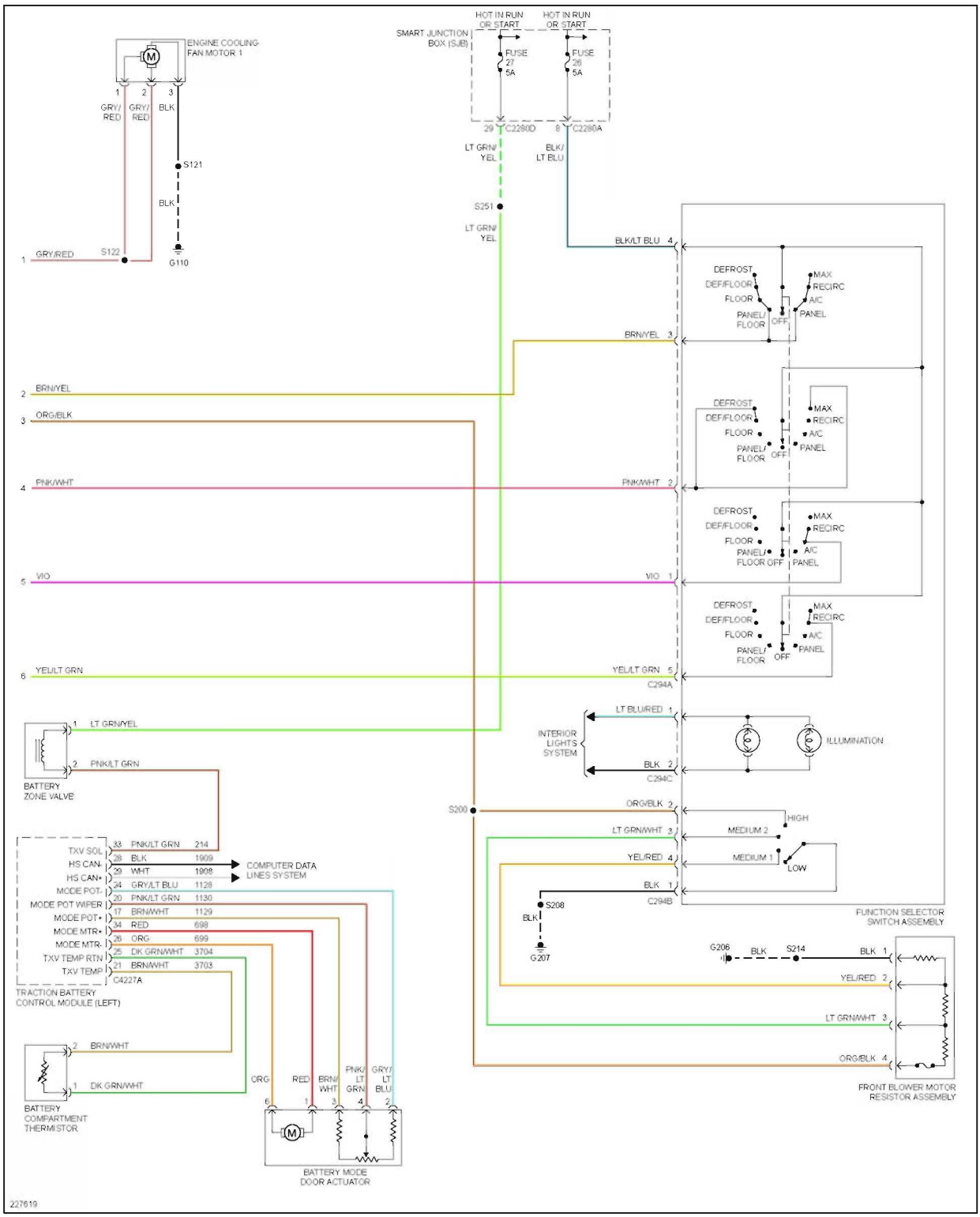

Fig. 5: 2.3L, Manual A/C Circuit, Hybrid (3 of 3)

3.0L

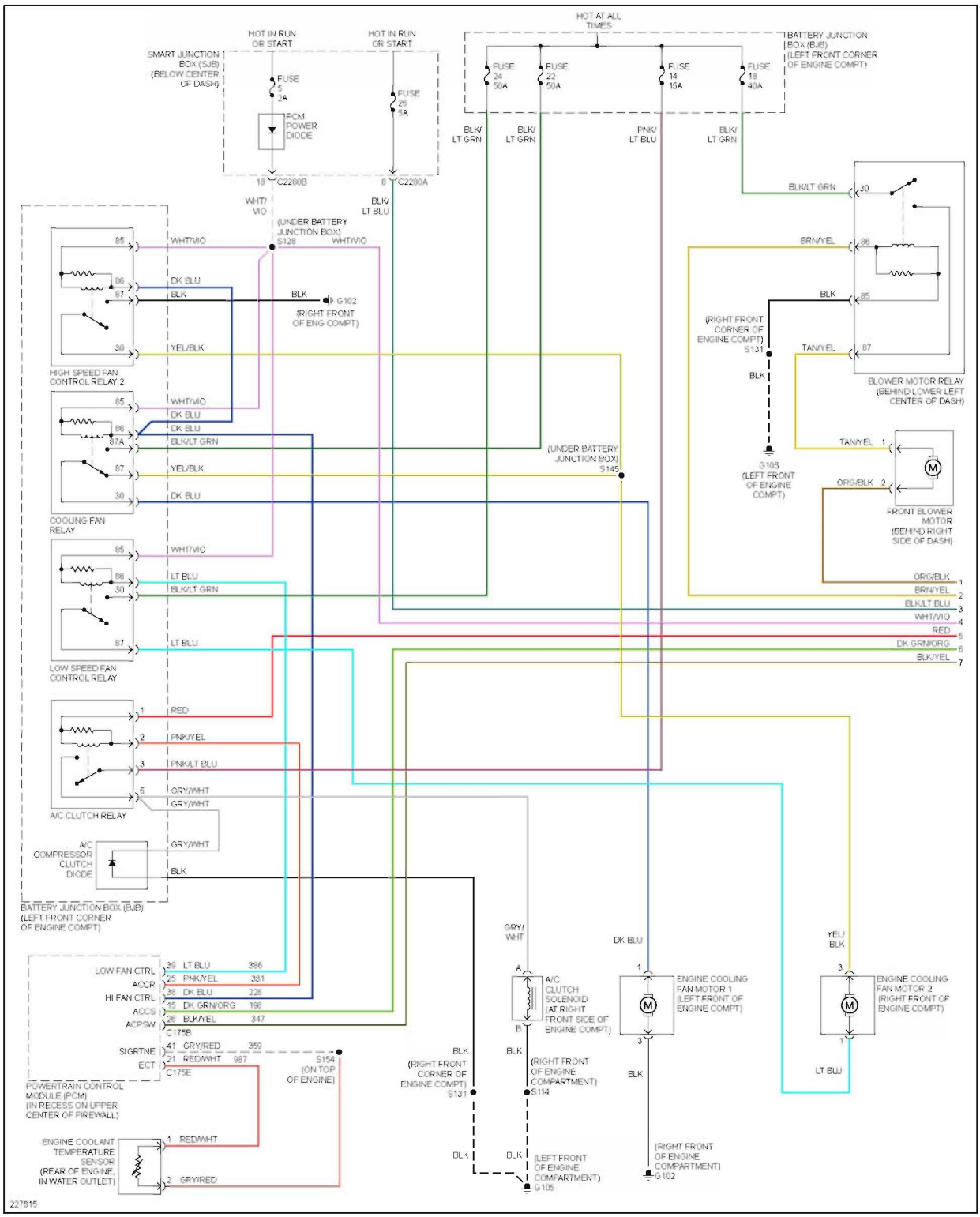

Fig. 6: 3.0L, Manual A/C Circuit, Except Hybrid (1 of 2)

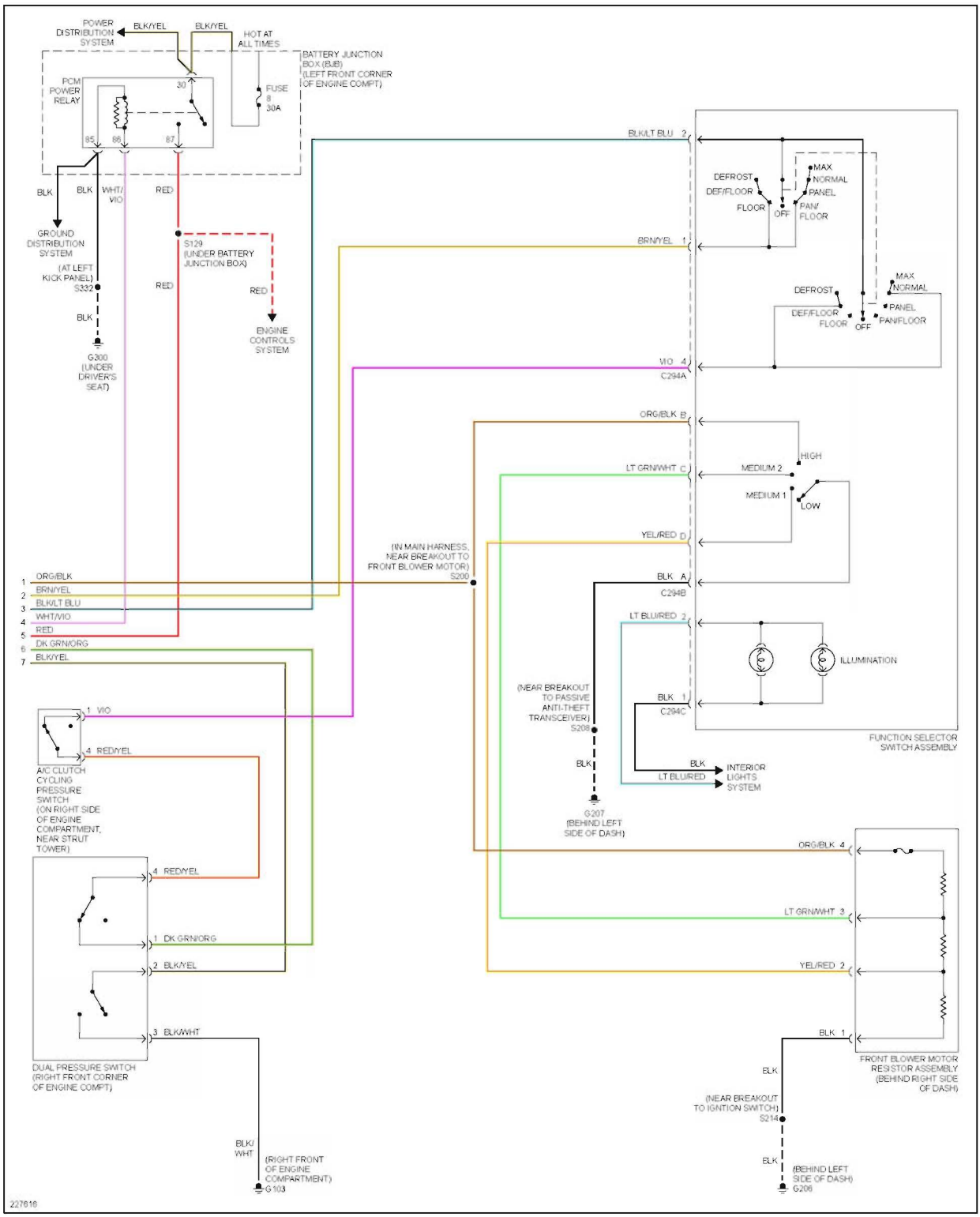

Fig. 7: 3.0L, Manual A/C Circuit, Except Hybrid (2 of 2)

ANTI-LOCK BRAKES

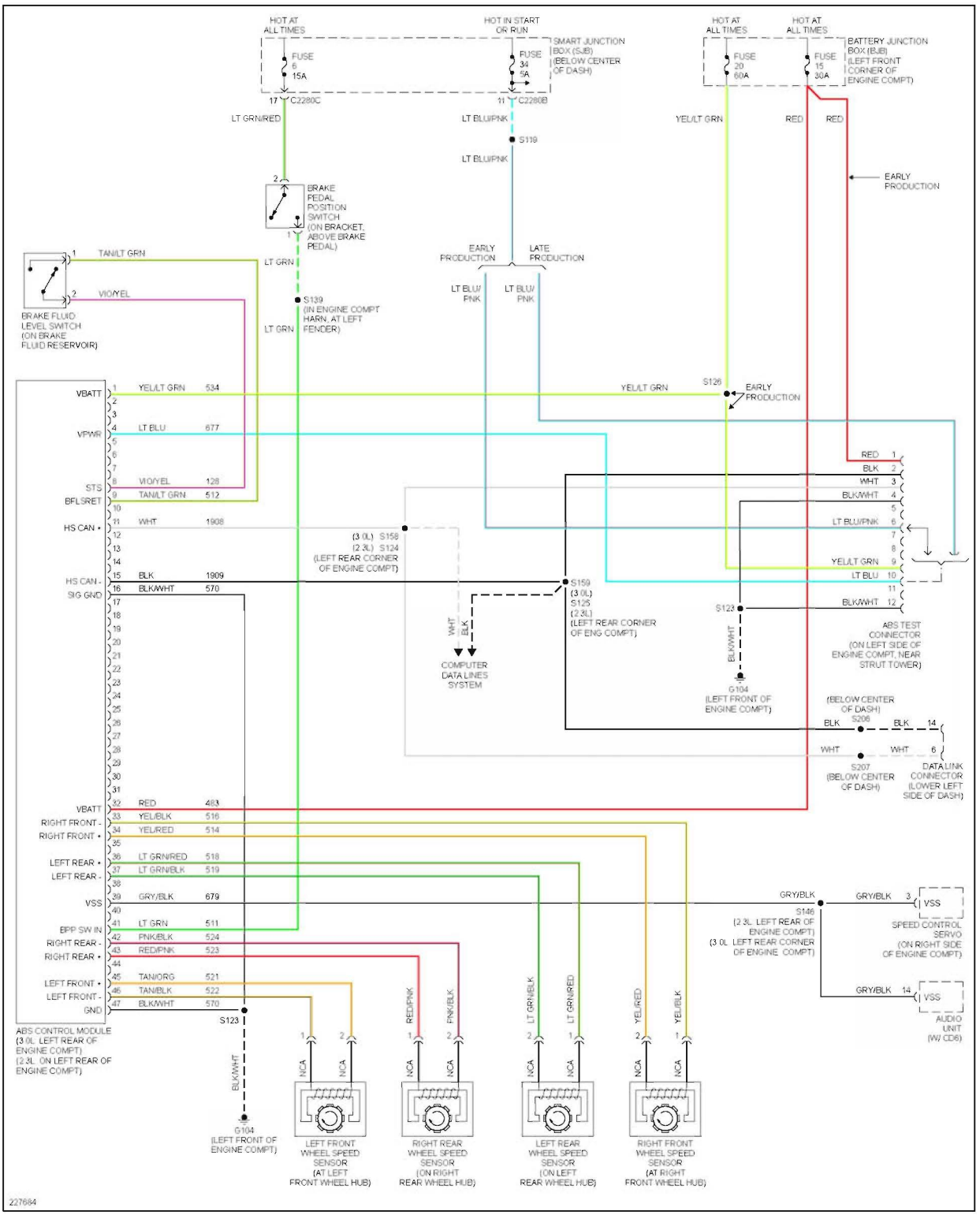

Fig. 8: Anti-lock Brakes Circuit, Except Hybrid

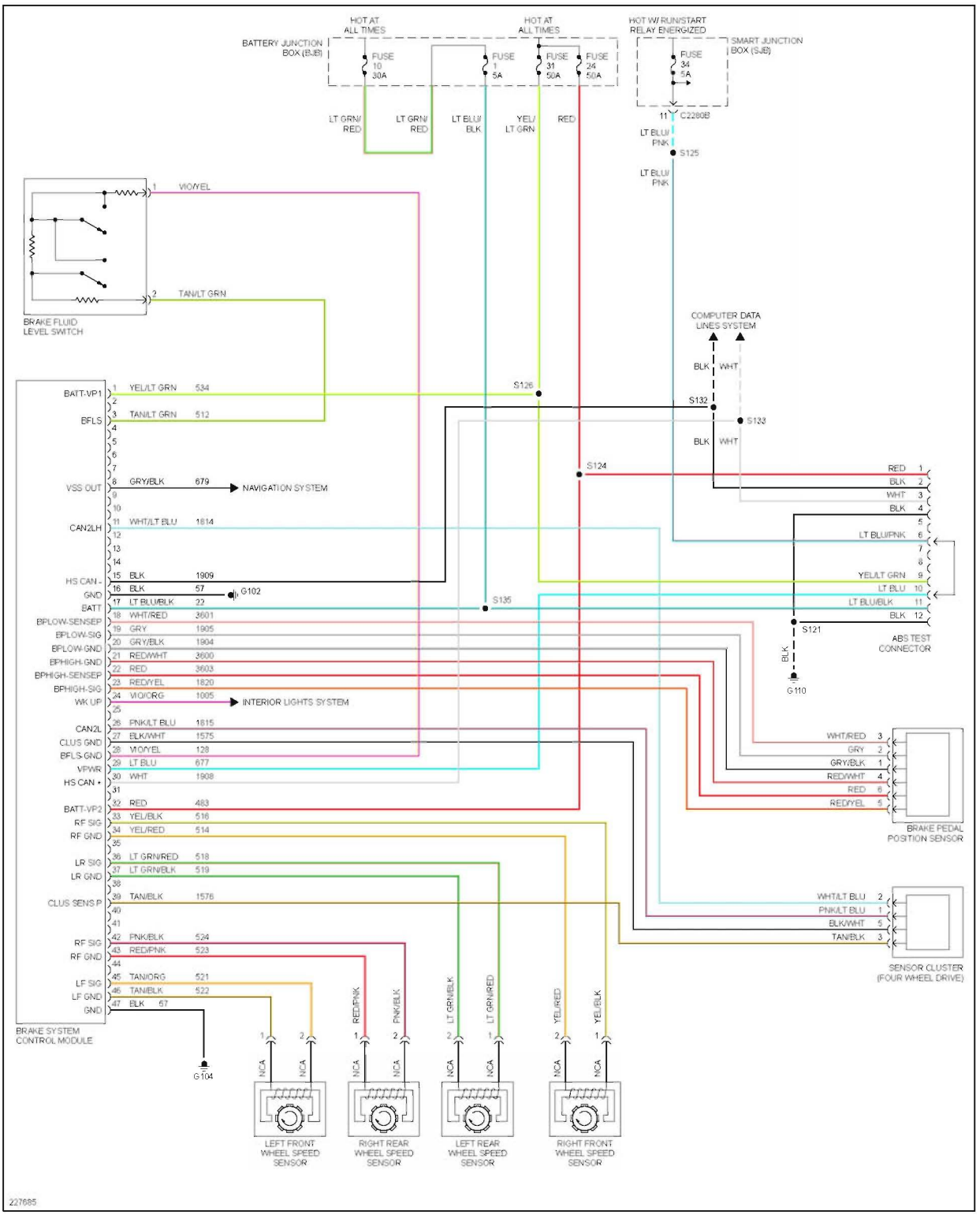

Fig. 9: Anti-lock Brakes Circuit, Hybrid

ANTI-THEFT

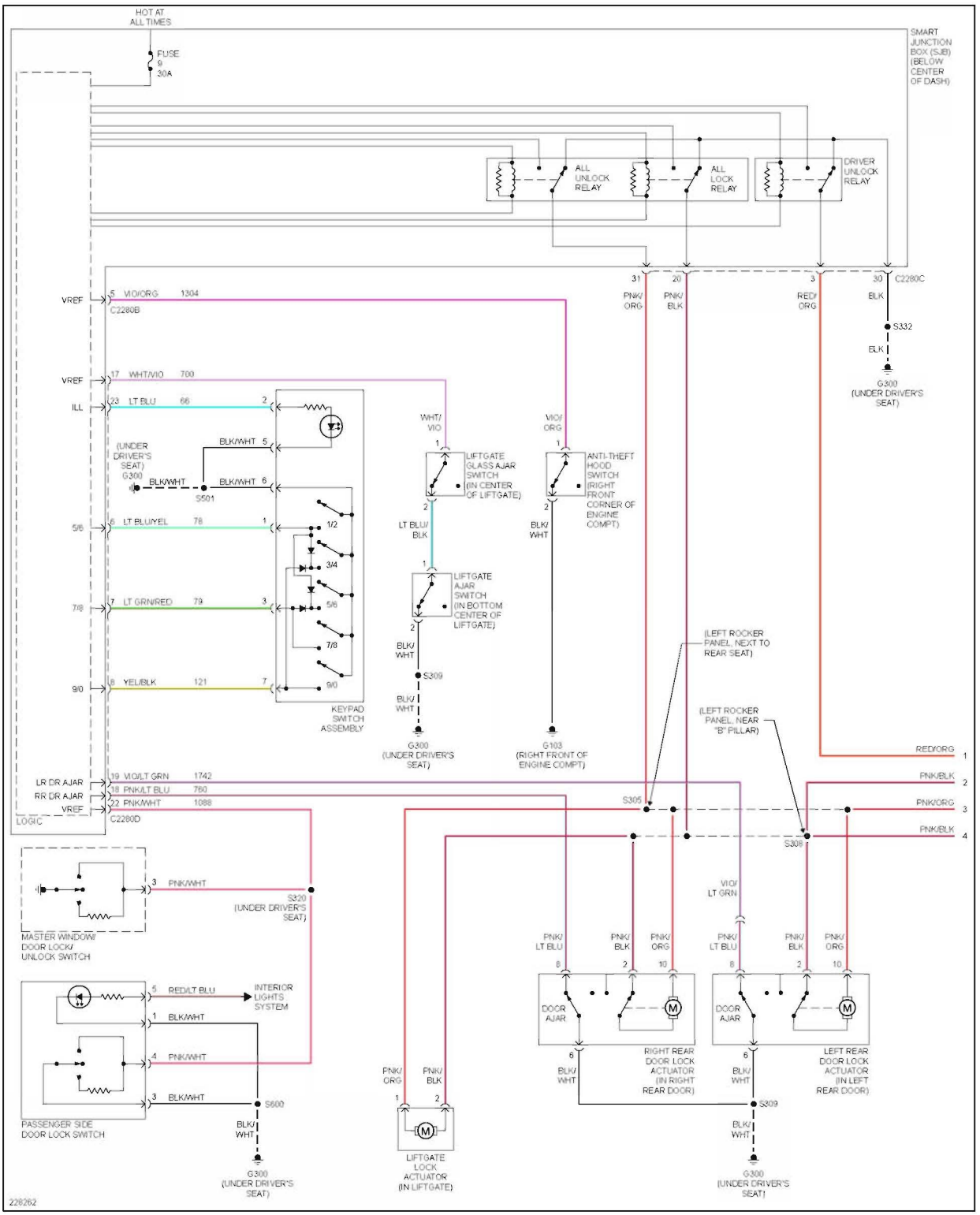

Fig. 10: Forced Entry Circuit, Except Hybrid (1 of 2)

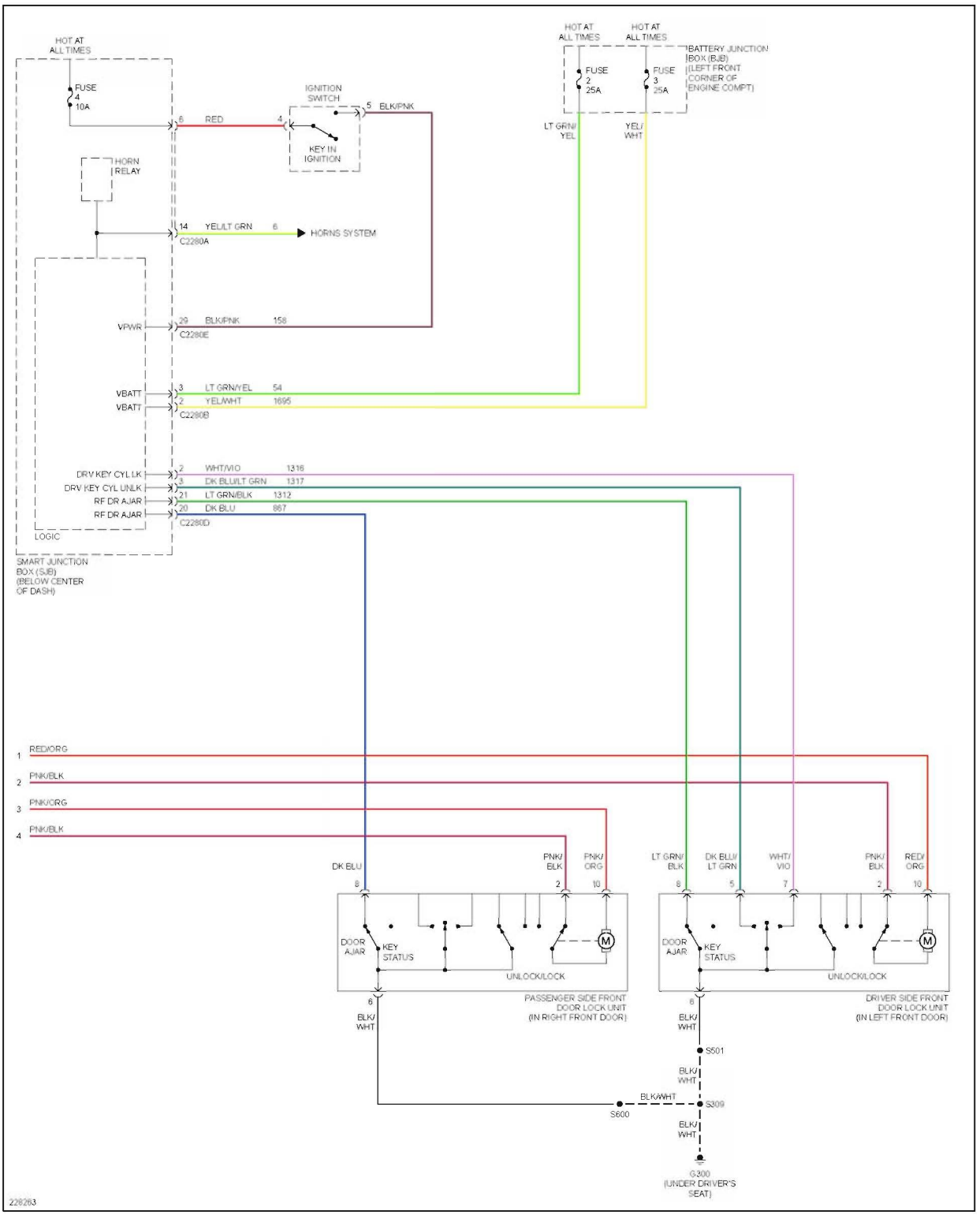

Fig. 11: Forced Entry Circuit, Except Hybrid (2 of 2)

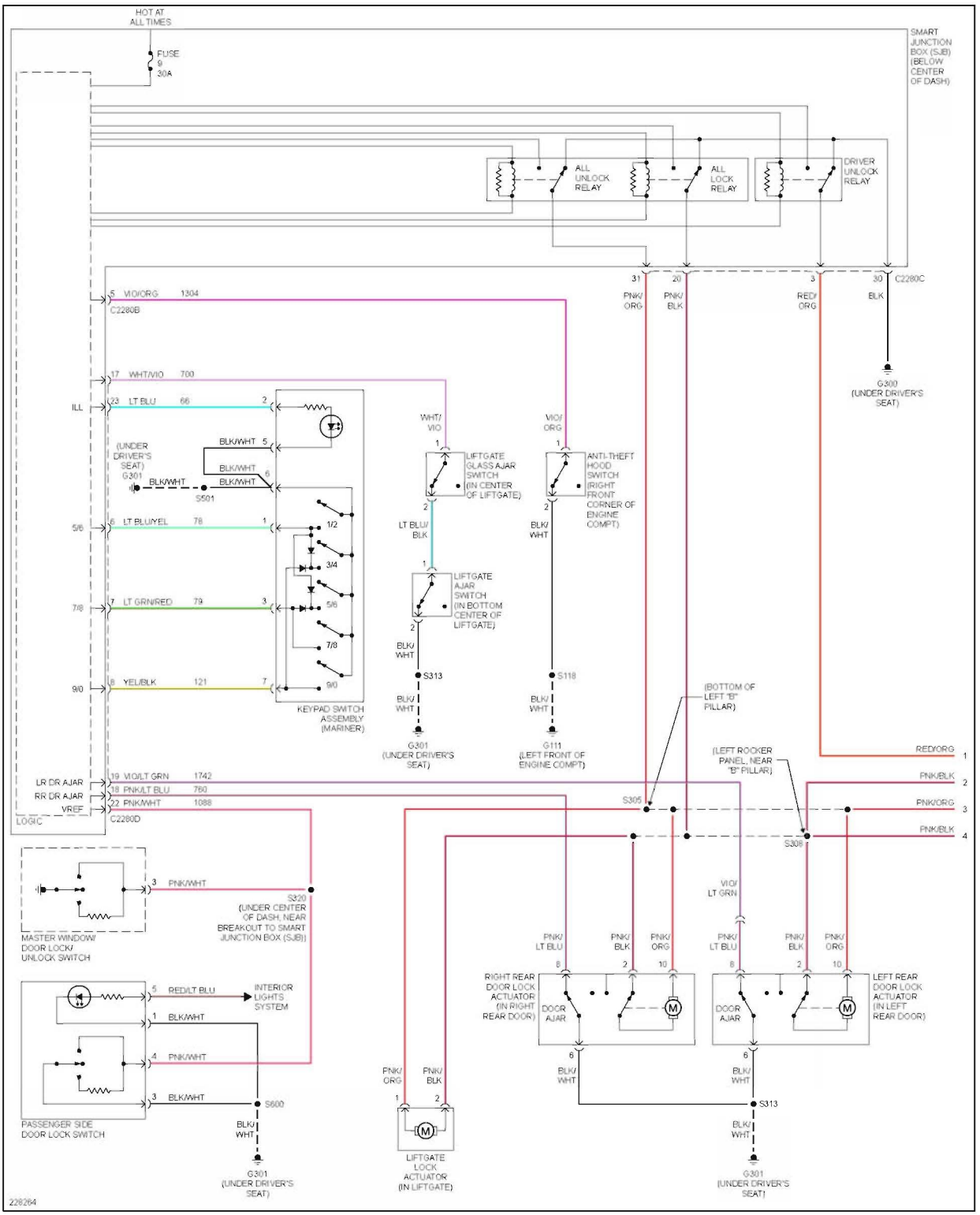

Fig. 12: Forced Entry Circuit, Hybrid (1 of 2)

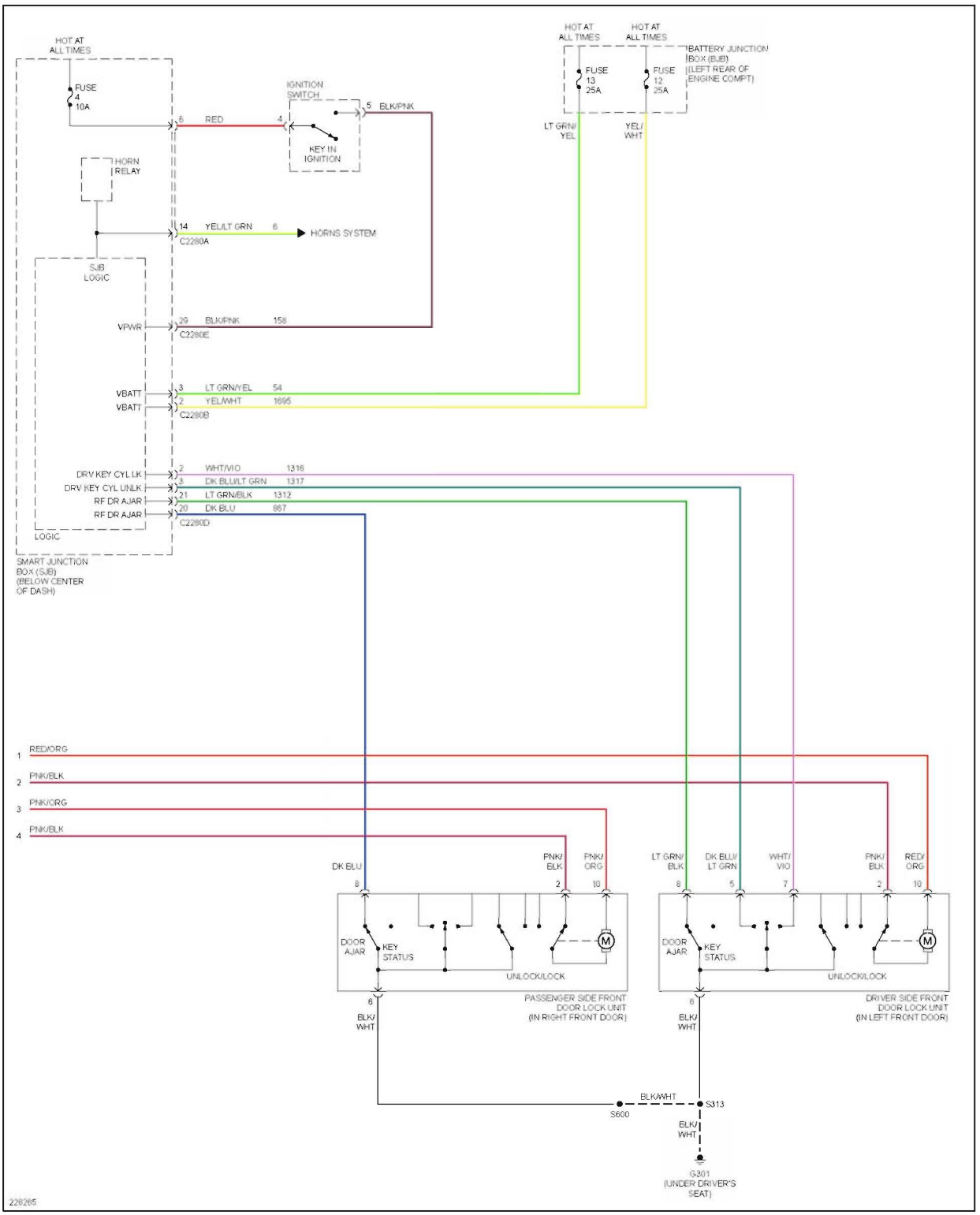

Fig. 13: Forced Entry Circuit, Hybrid (2 of 2)

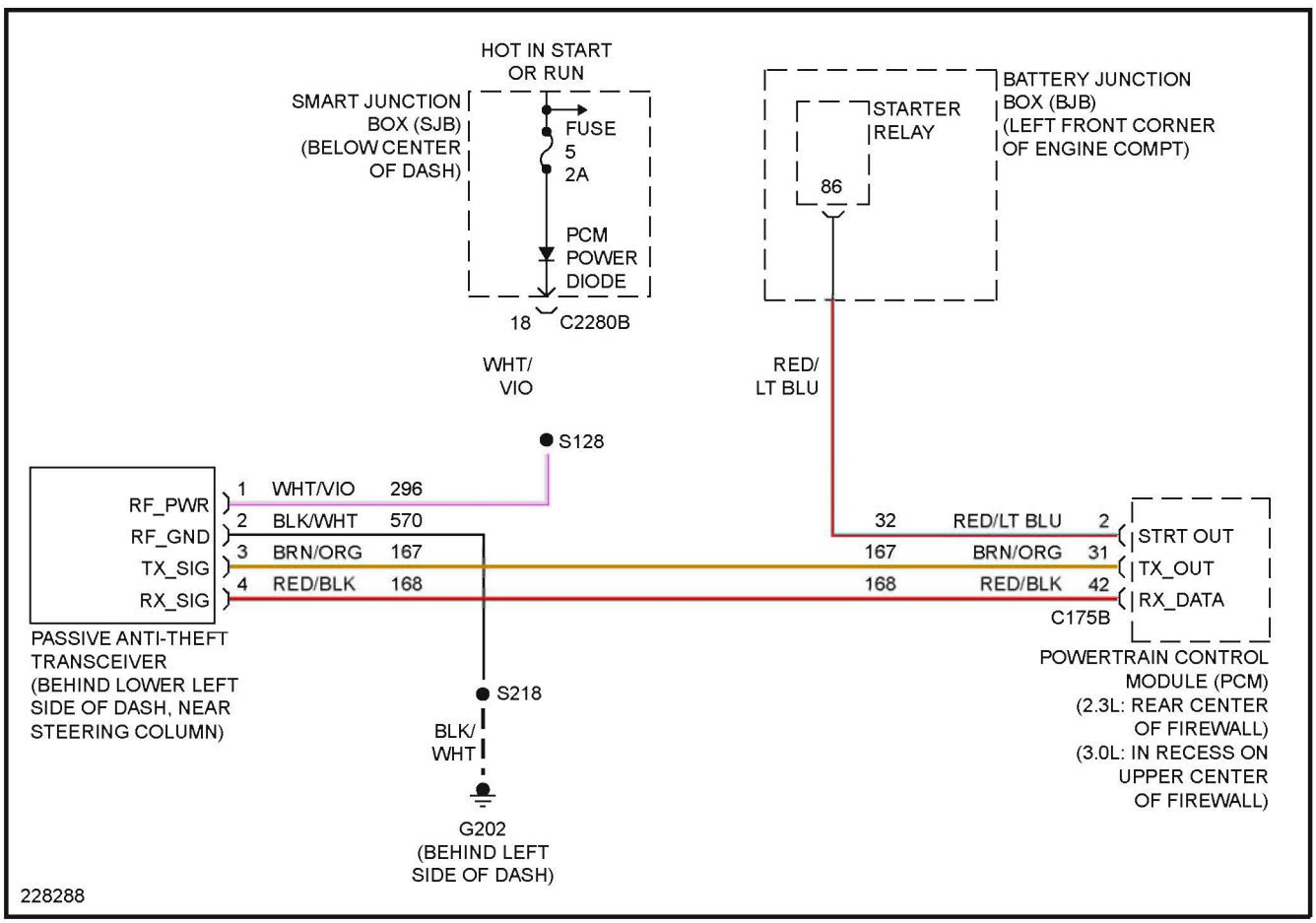

Fig. 14: Passive Anti-theft Circuit, Except Hybrid

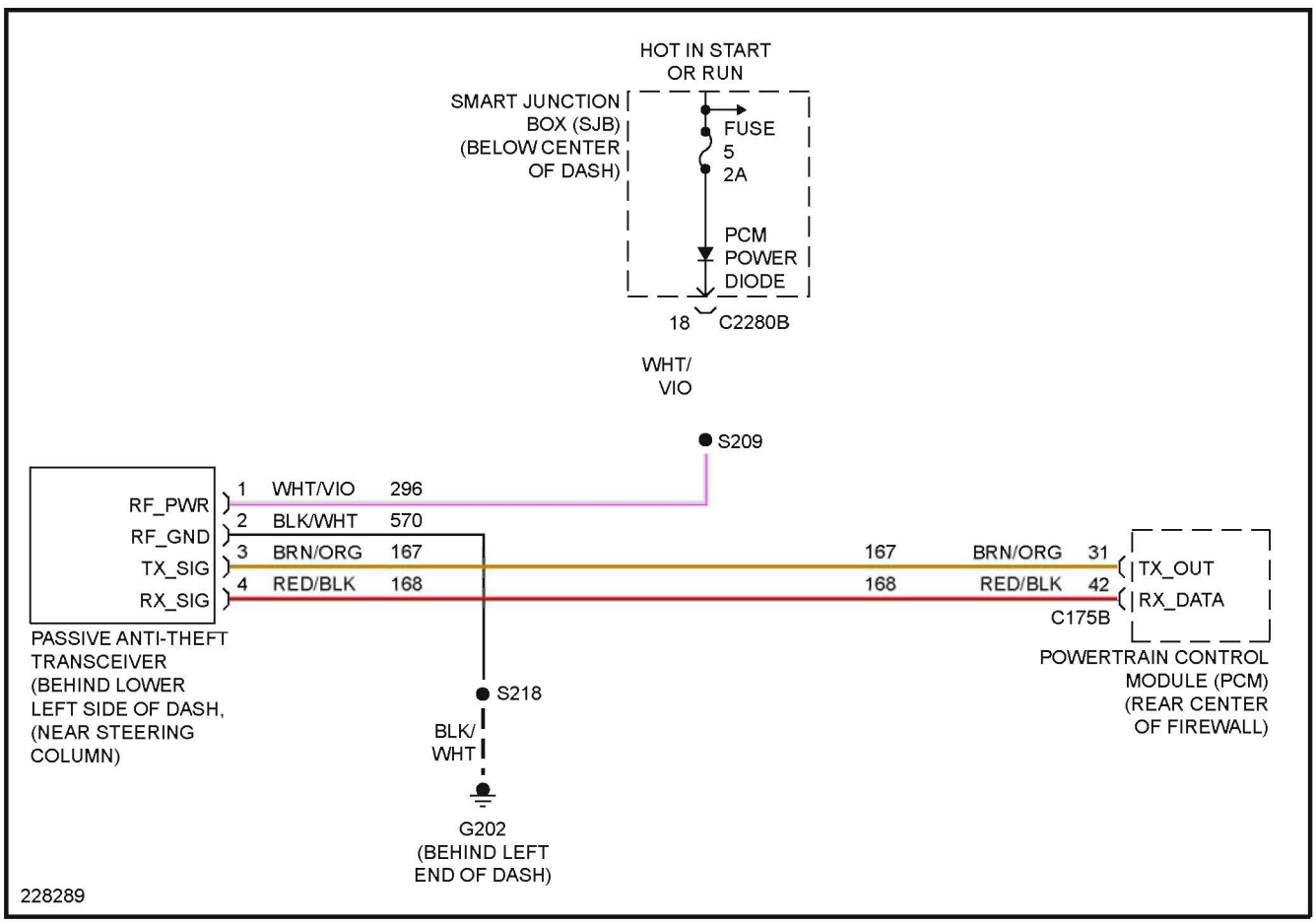

Fig. 15: Passive Anti-theft Circuit, Hybrid

BODY CONTROL MODULES

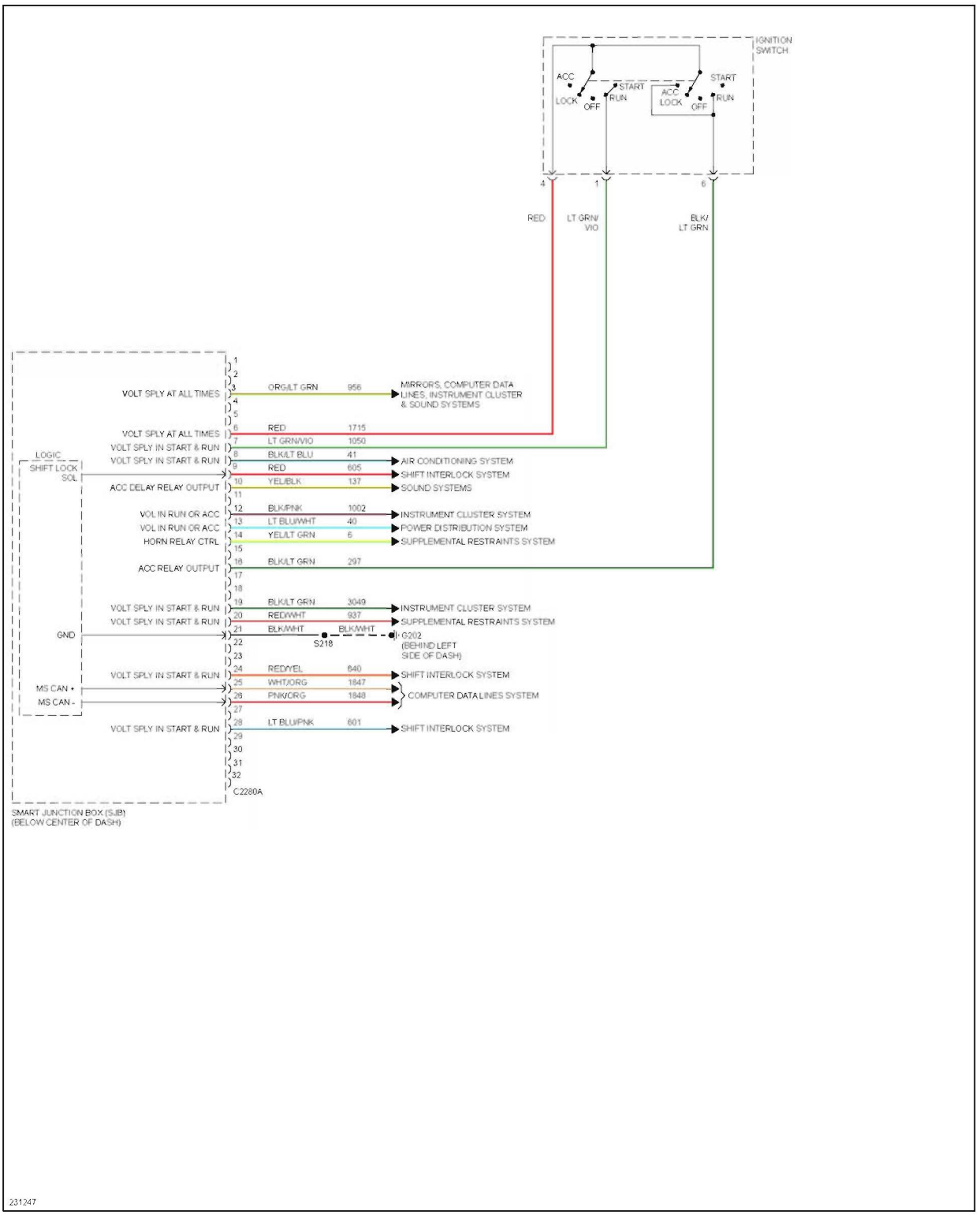

Fig. 16: Body Control Modules Circuit, Except Hybrid (1 of 3)

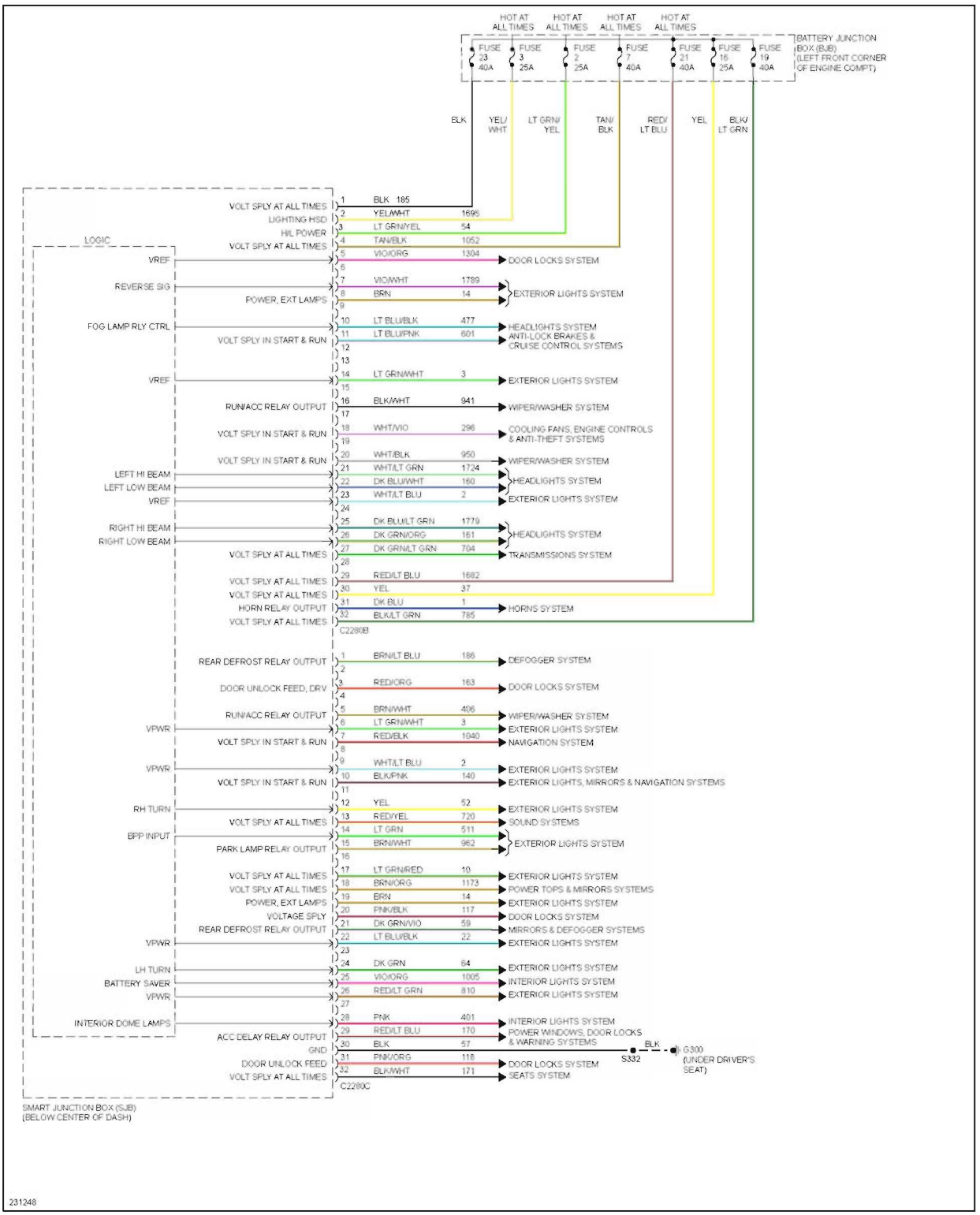

Fig. 17: Body Control Modules Circuit, Except Hybrid (2 of 3)

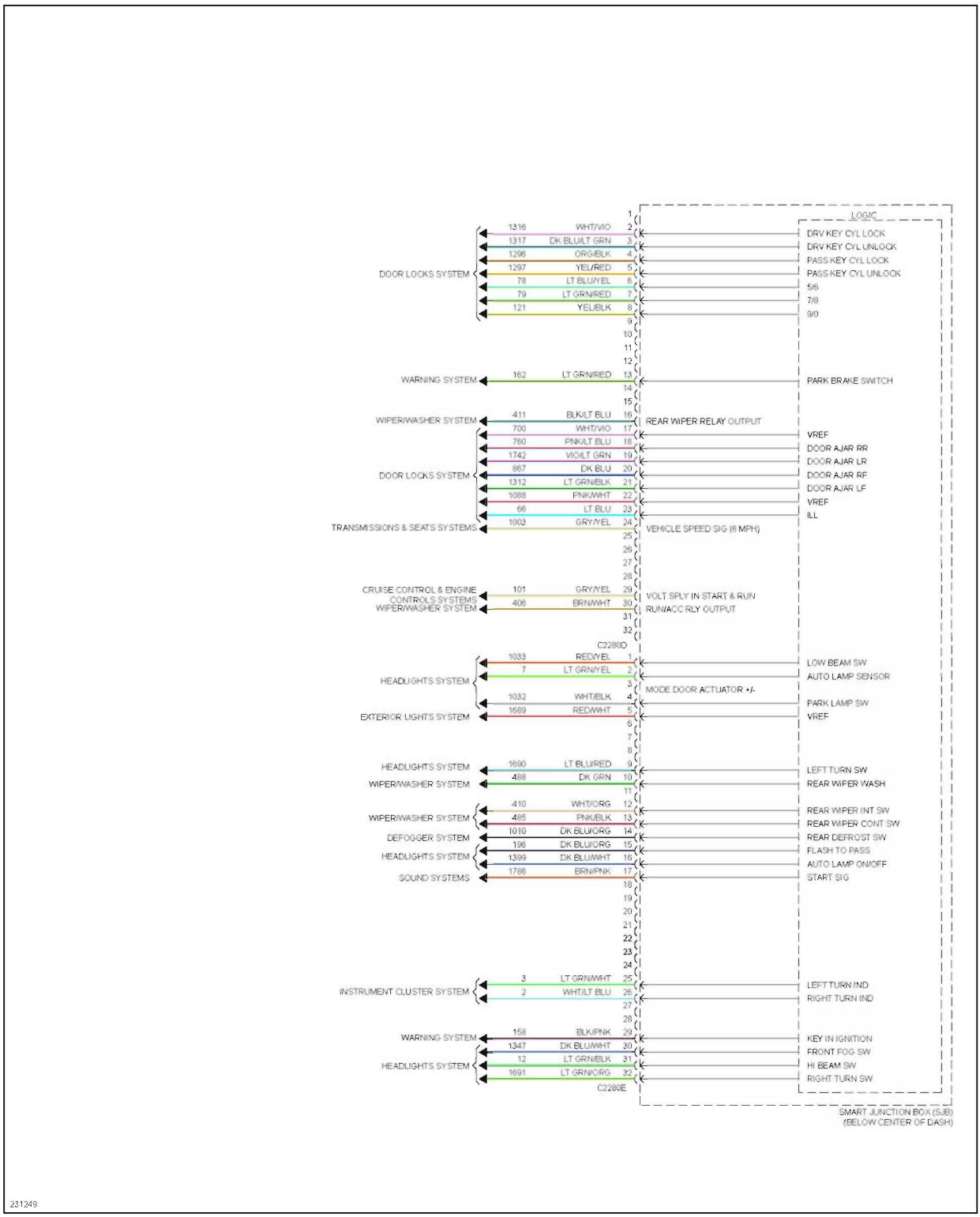

Fig. 18: Body Control Modules Circuit, Except Hybrid (3 of 3)

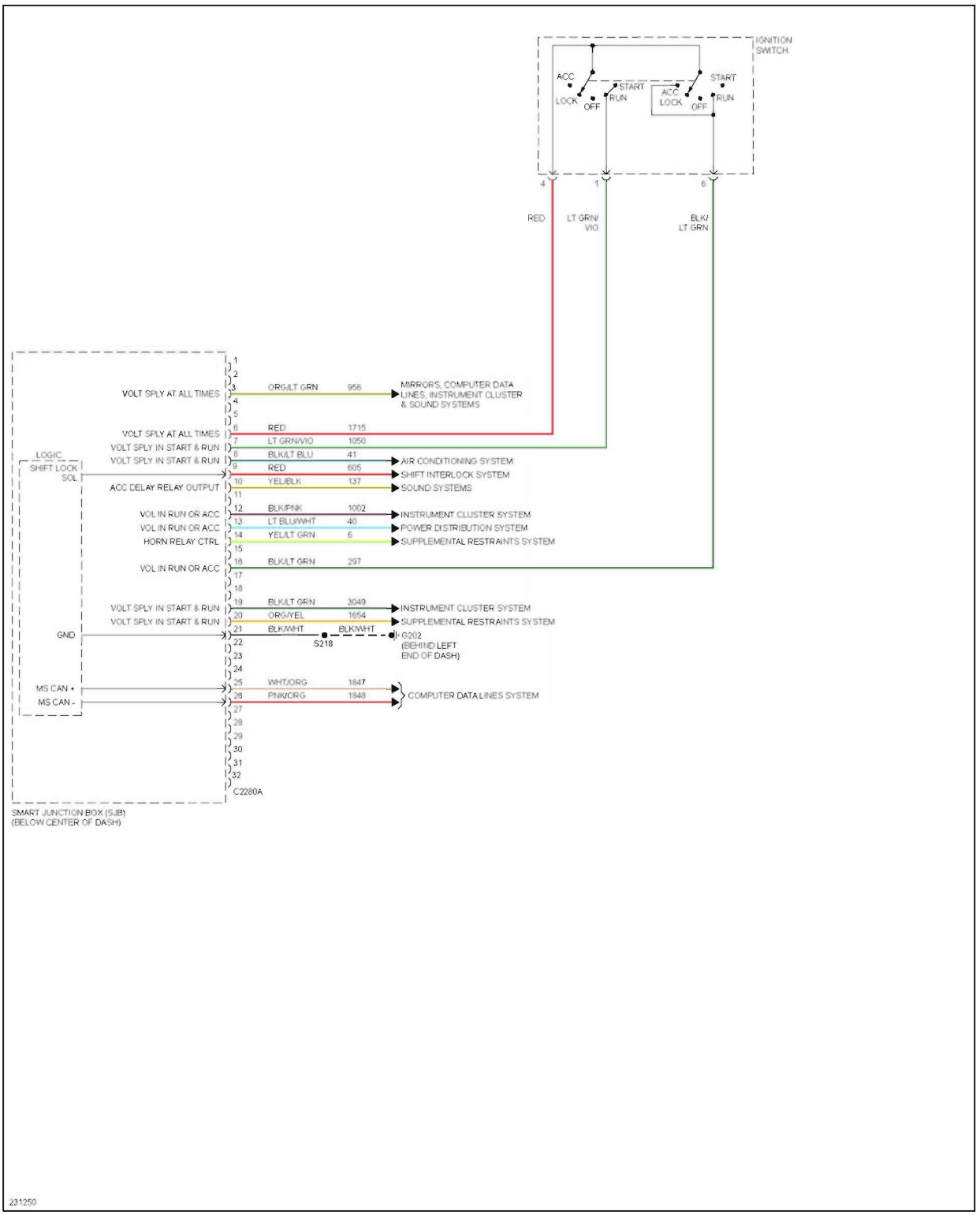

Fig. 19: Body Control Modules Circuit, Hybrid (1 of 3)

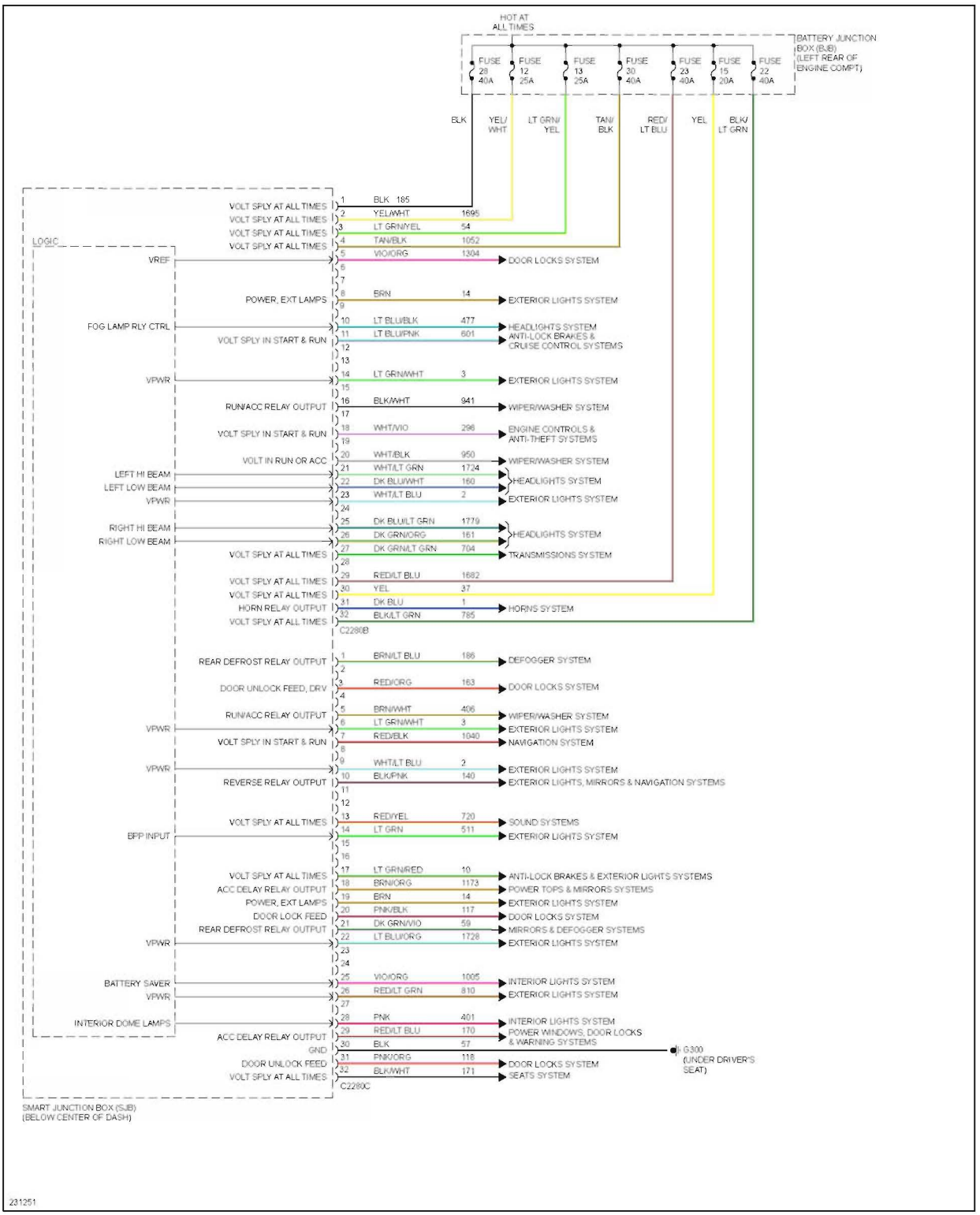

Fig. 20: Body Control Modules Circuit, Hybrid (2 of 3)

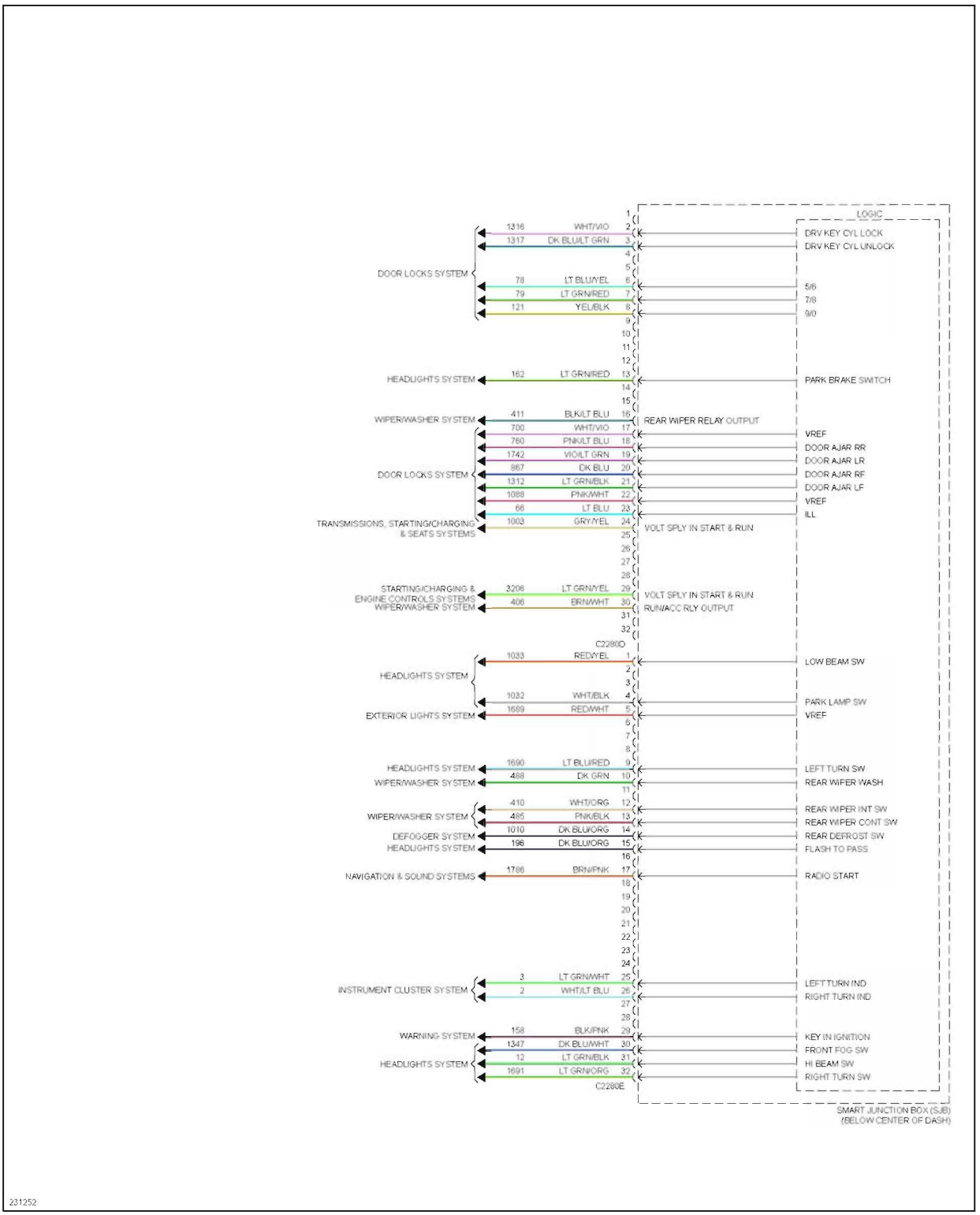

Fig. 21: Body Control Modules Circuit, Hybrid (3 of 3)

COMPUTER DATA LINES

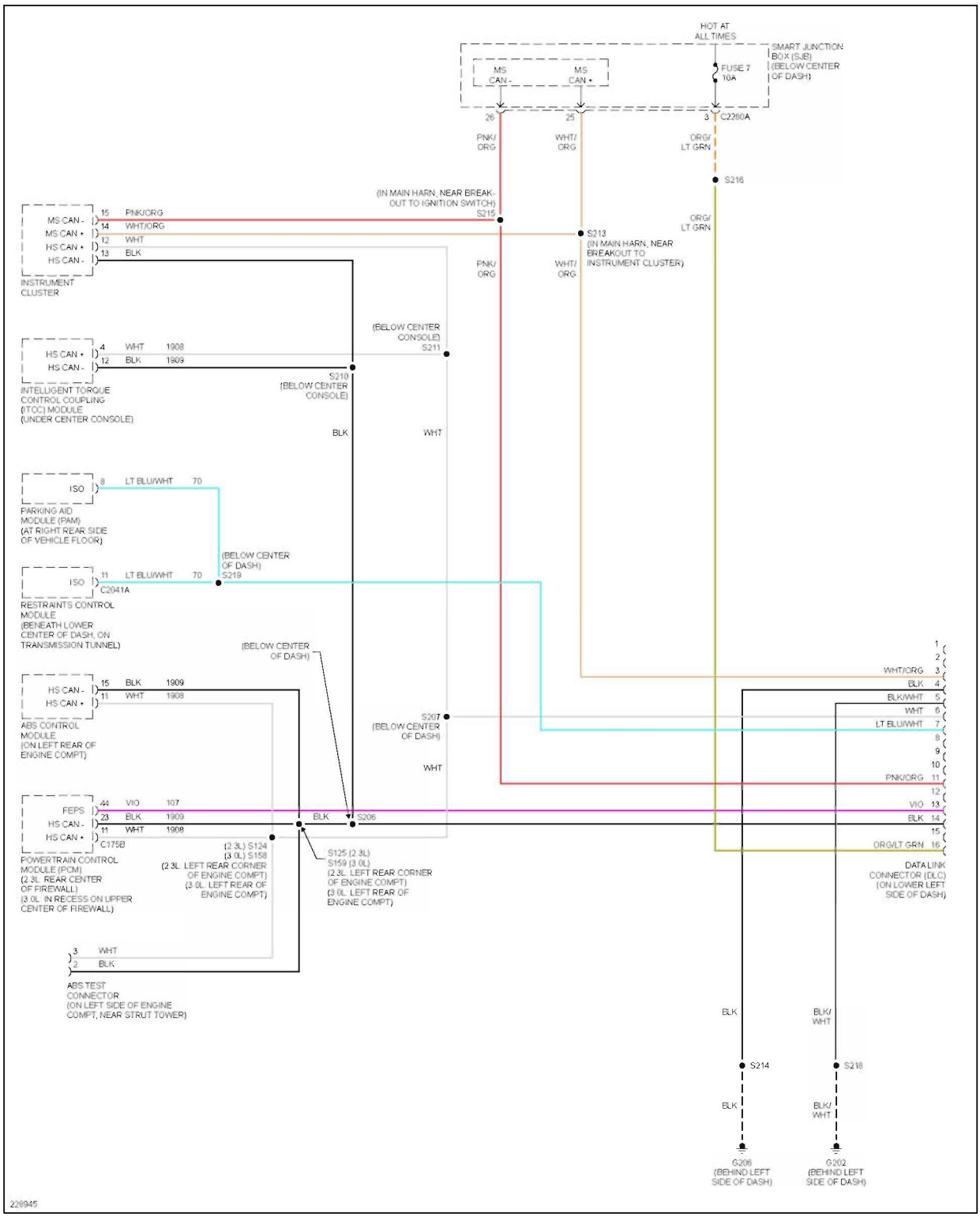

Fig. 22: Computer Data Lines Circuit, Except Hybrid

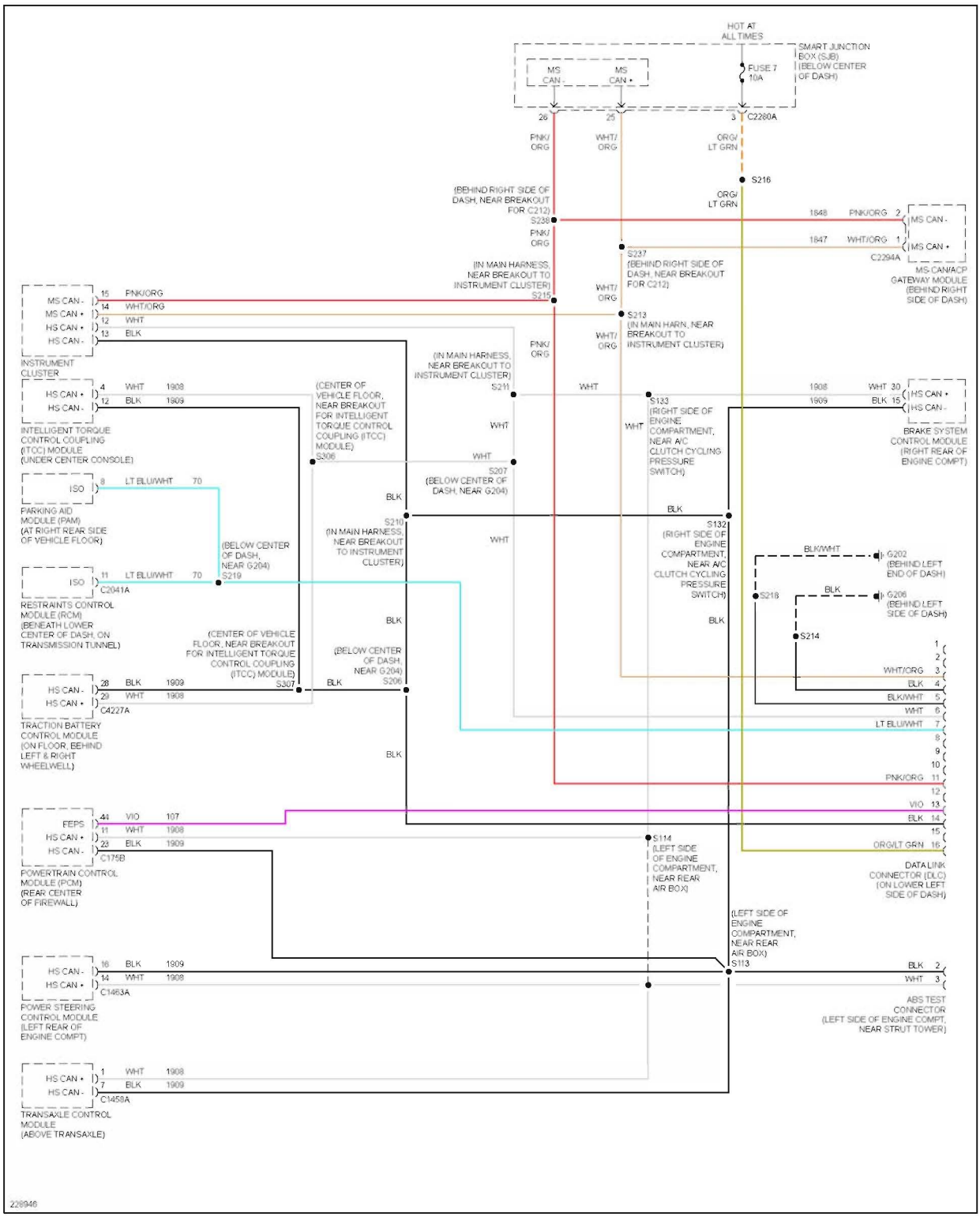

Fig. 23: Computer Data Lines Circuit, Hybrid

COOLING FAN

2.3L

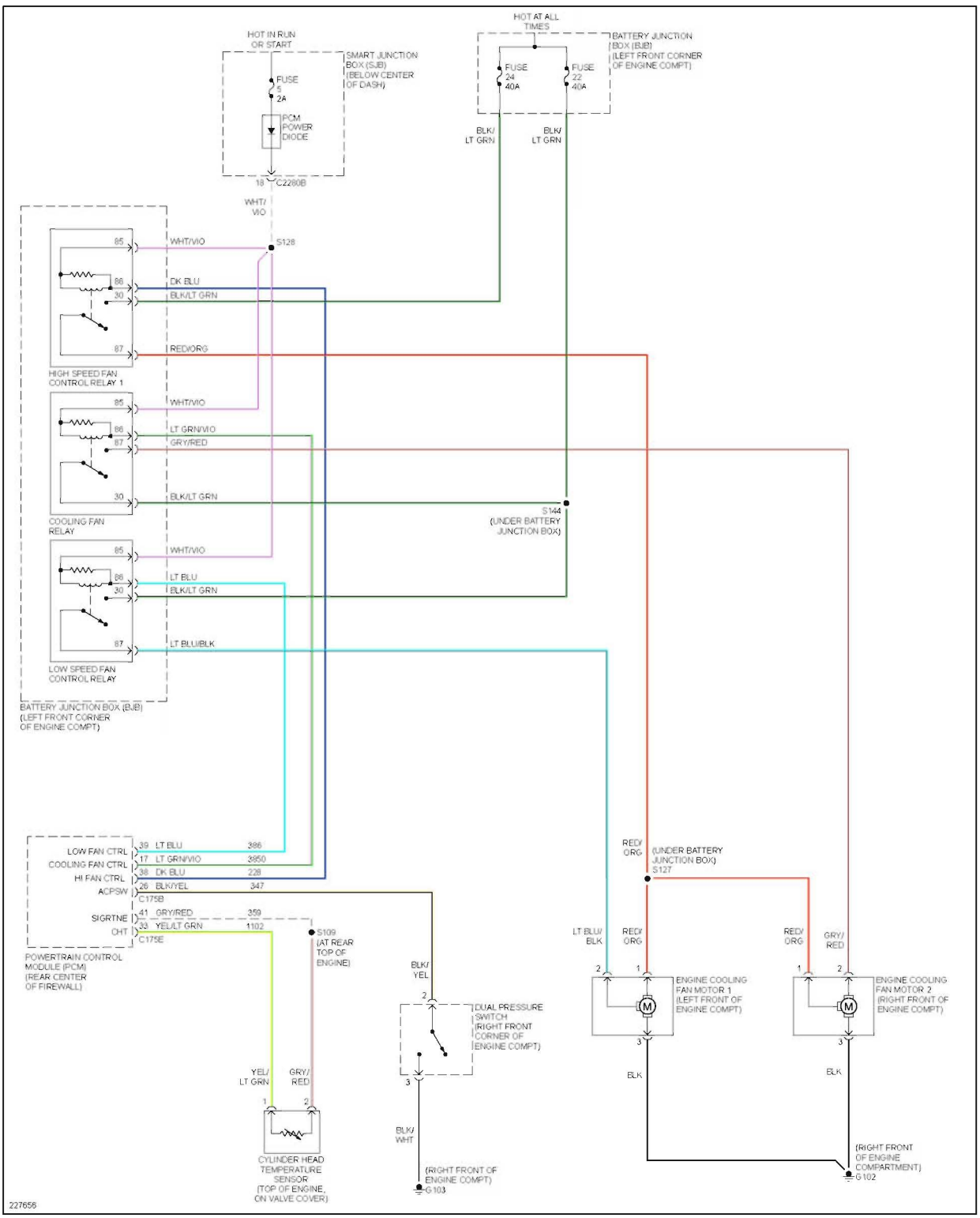

Fig. 24: 2.3L, Cooling Fan Circuit, Except Hybrid

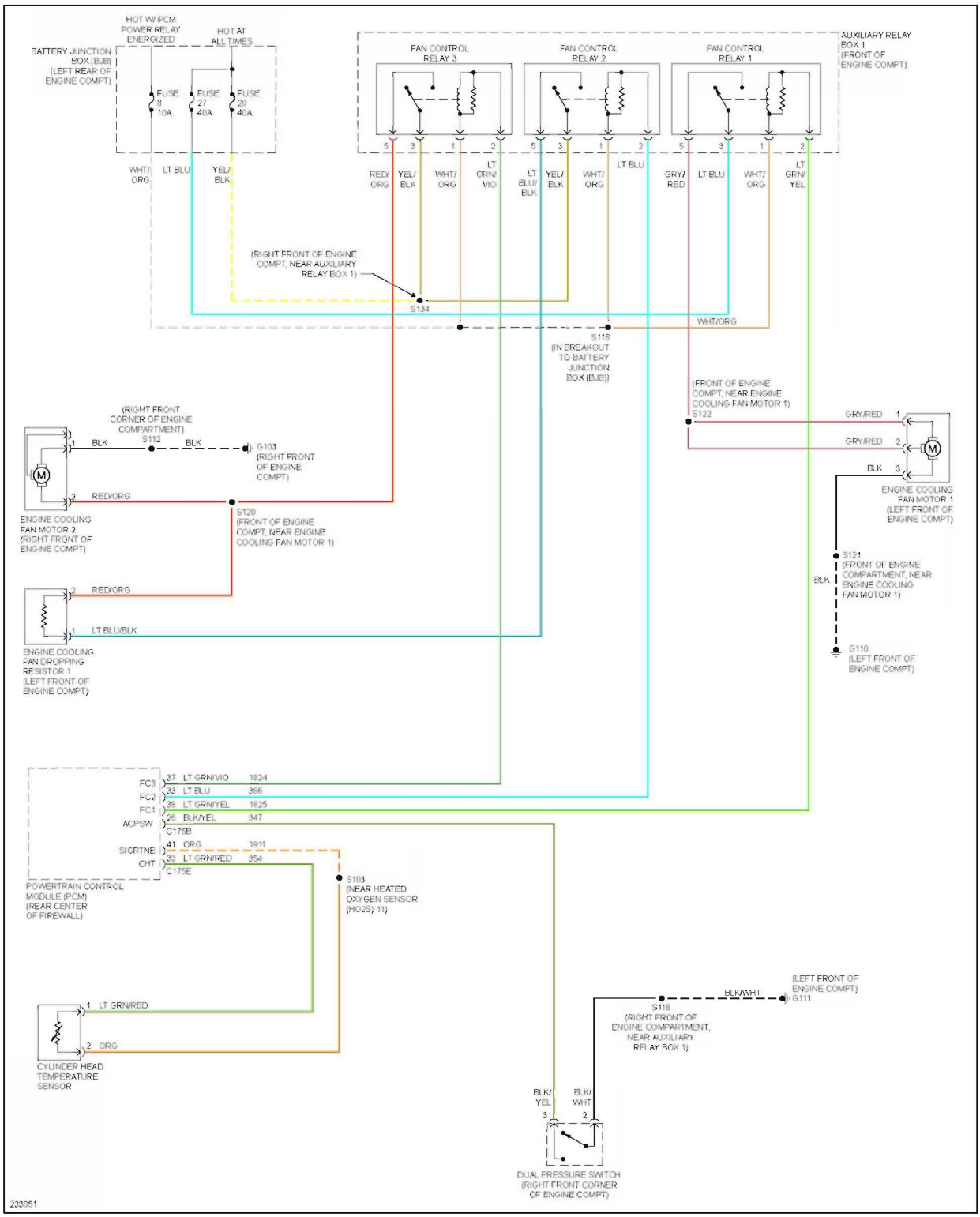

Fig. 25: 2.3L, Cooling Fan Circuit, Hybrid

3.0L

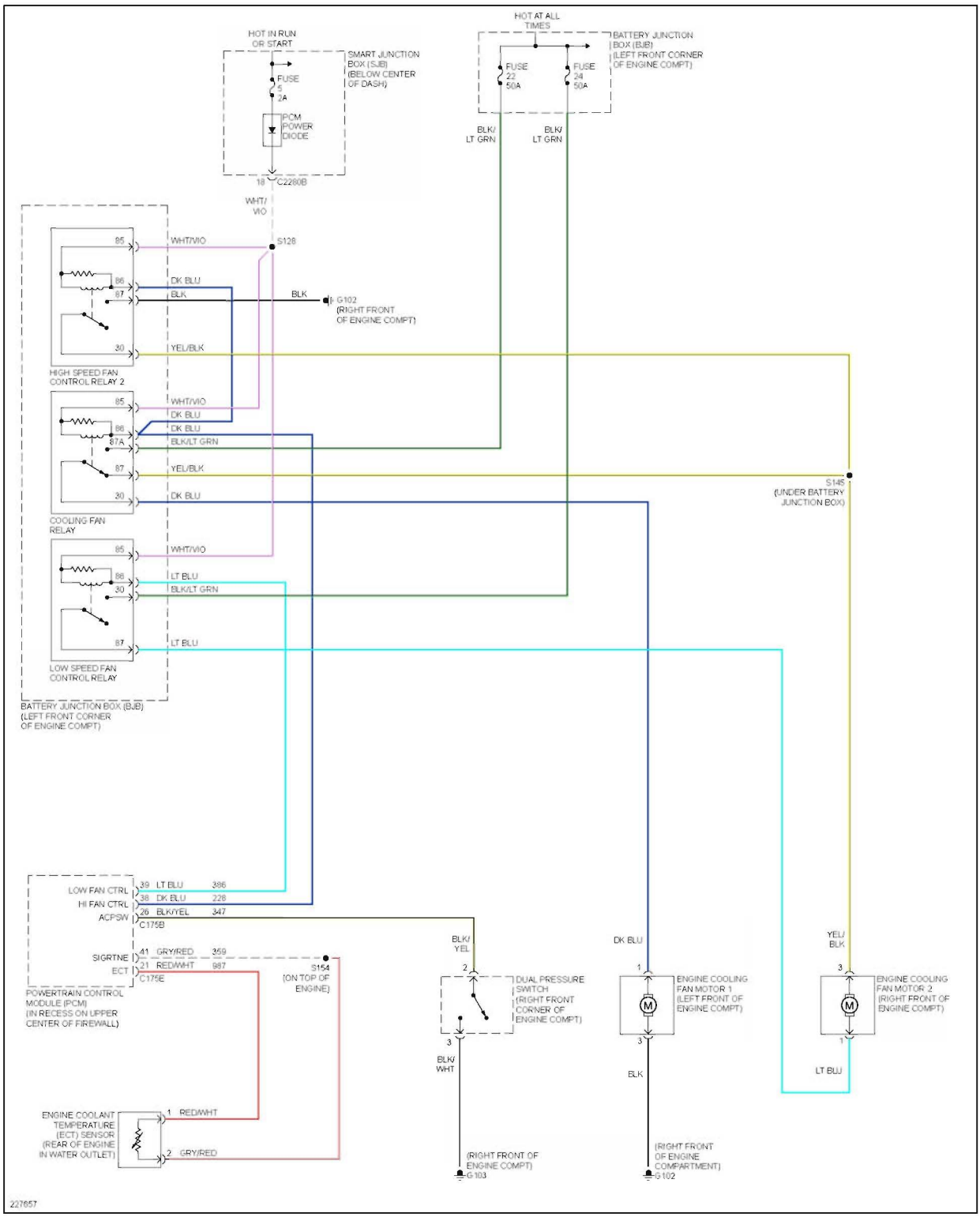

Fig. 26: 3.0L, Cooling Fan Circuit

CRUISE CONTROL

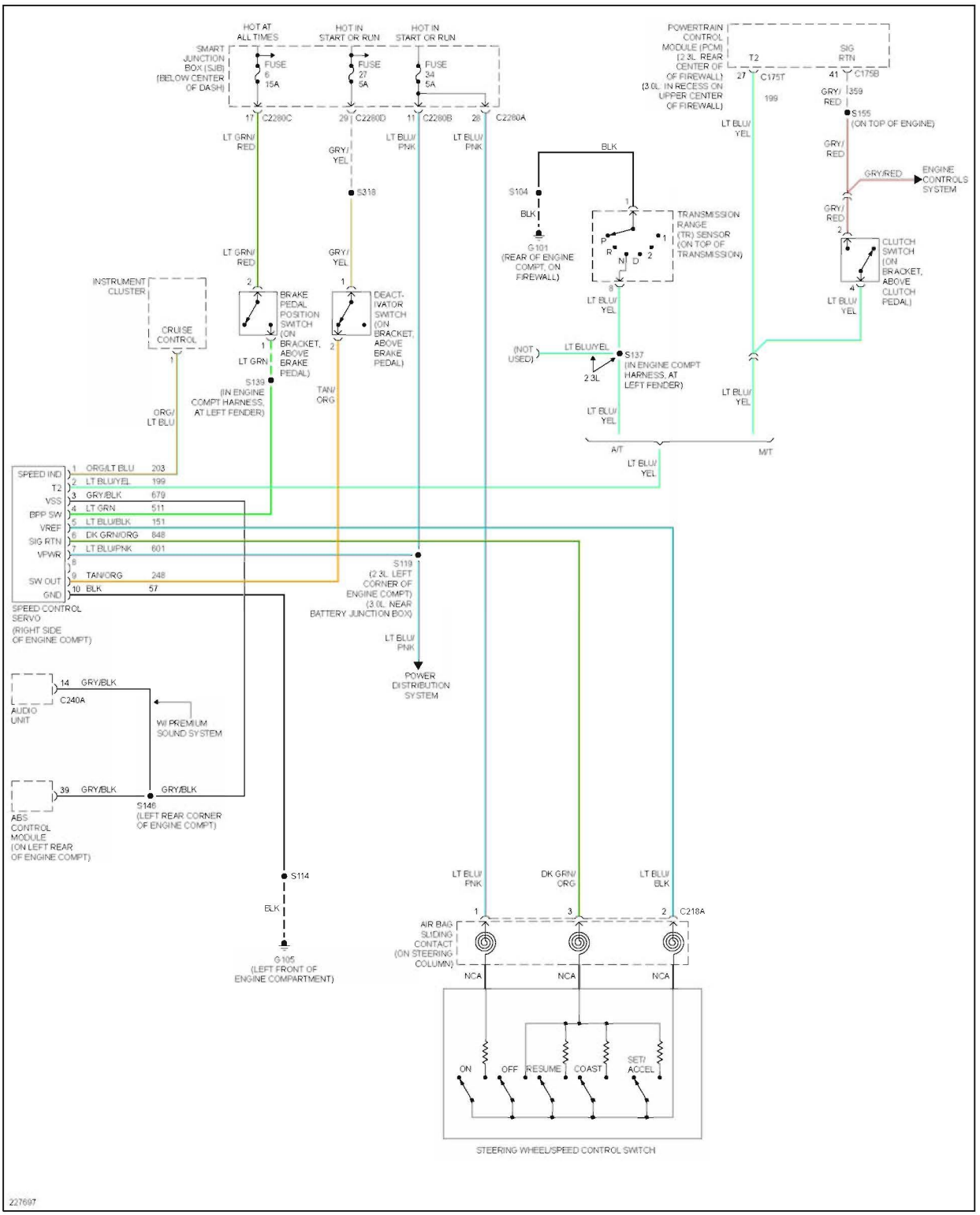

Fig. 27: Cruise Control Circuit, Except Hybrid

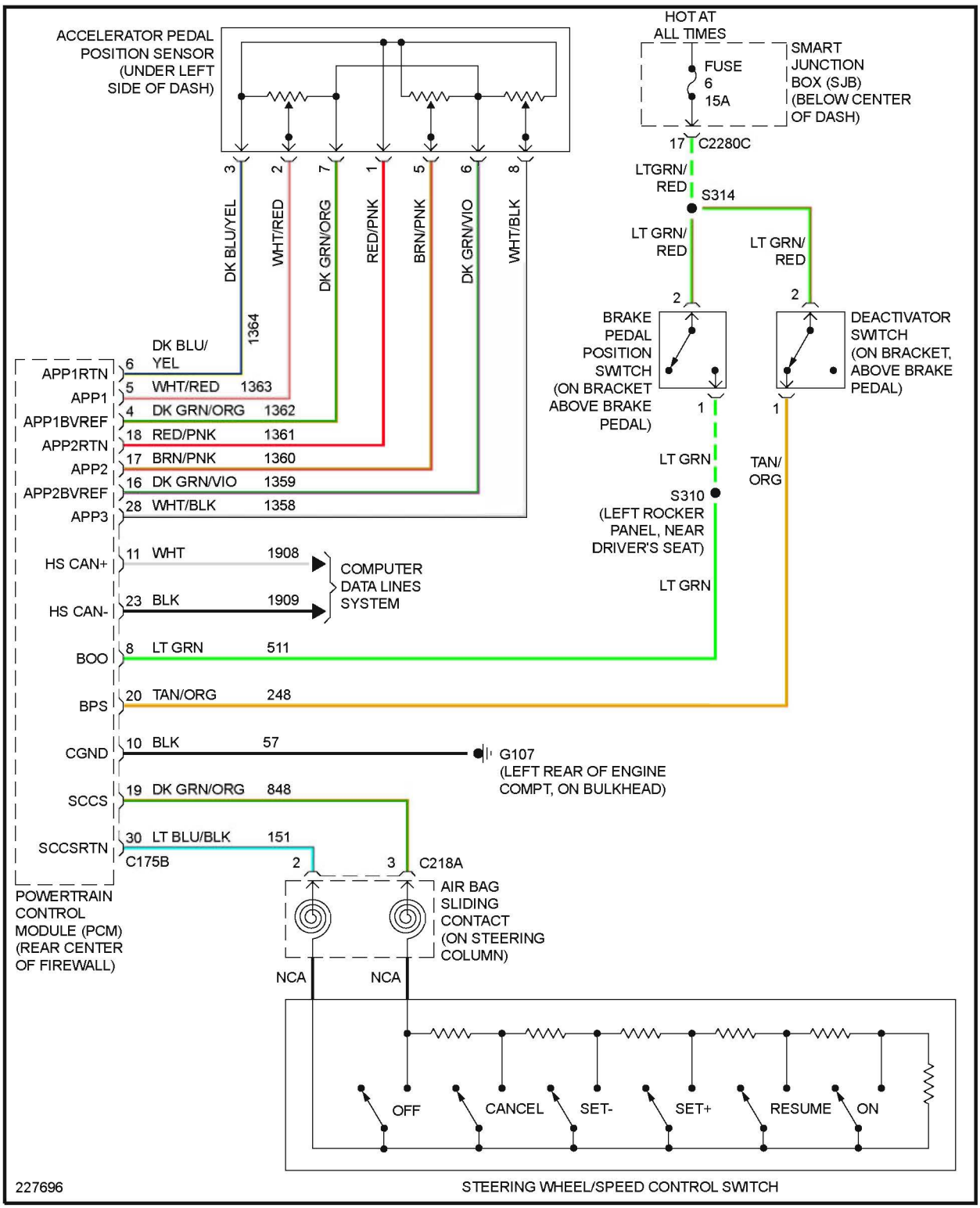

Fig. 28: Cruise Control Circuit, Hybrid

DEFOGGERS

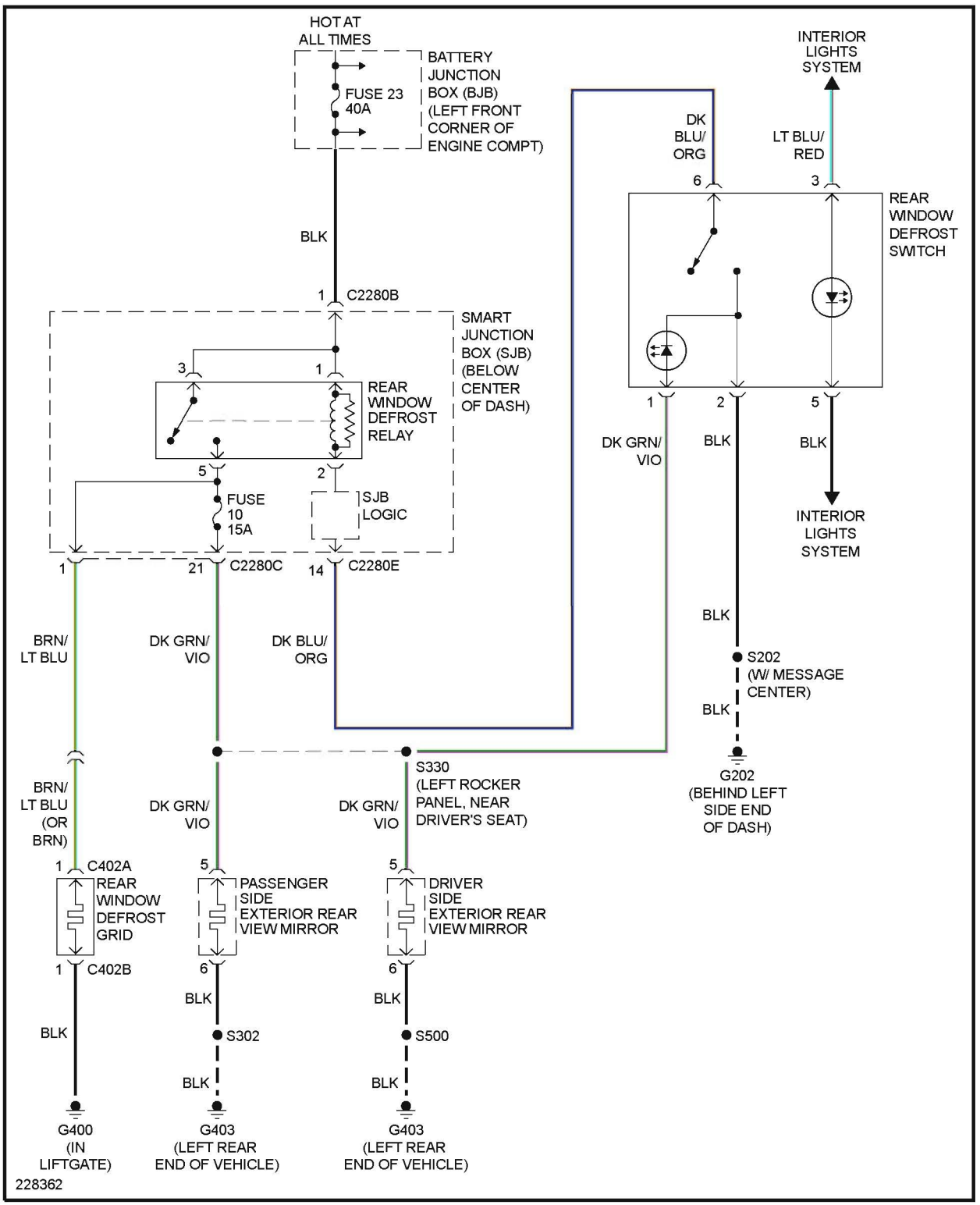

Fig. 29: Defoggers Circuit, Except Hybrid

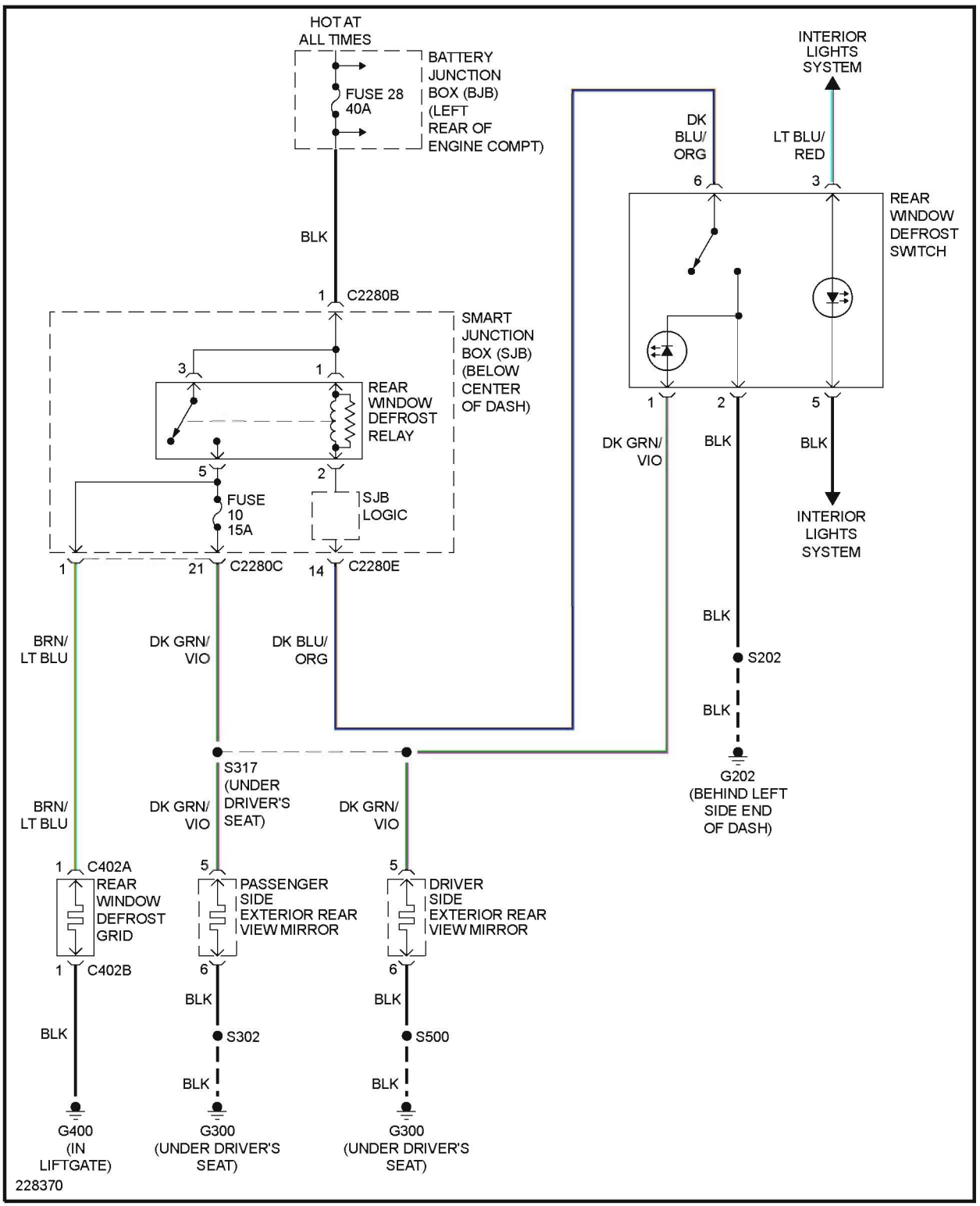

Fig. 30: Defoggers Circuit, Hybrid

ELECTRONIC POWER STEERING

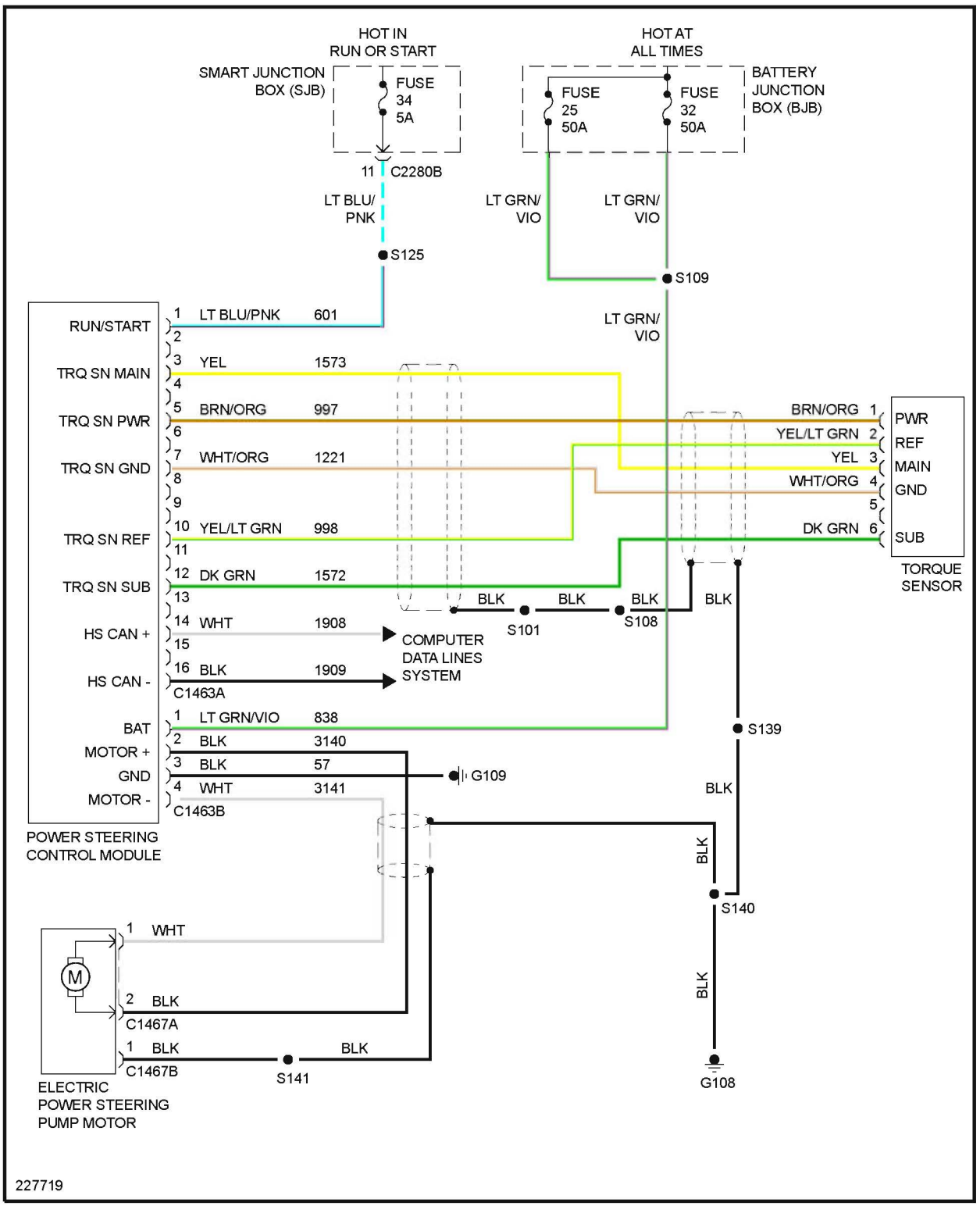

Fig. 31: Electronic Power Steering Circuit, Hybrid

ENGINE PERFORMANCE

2.3L

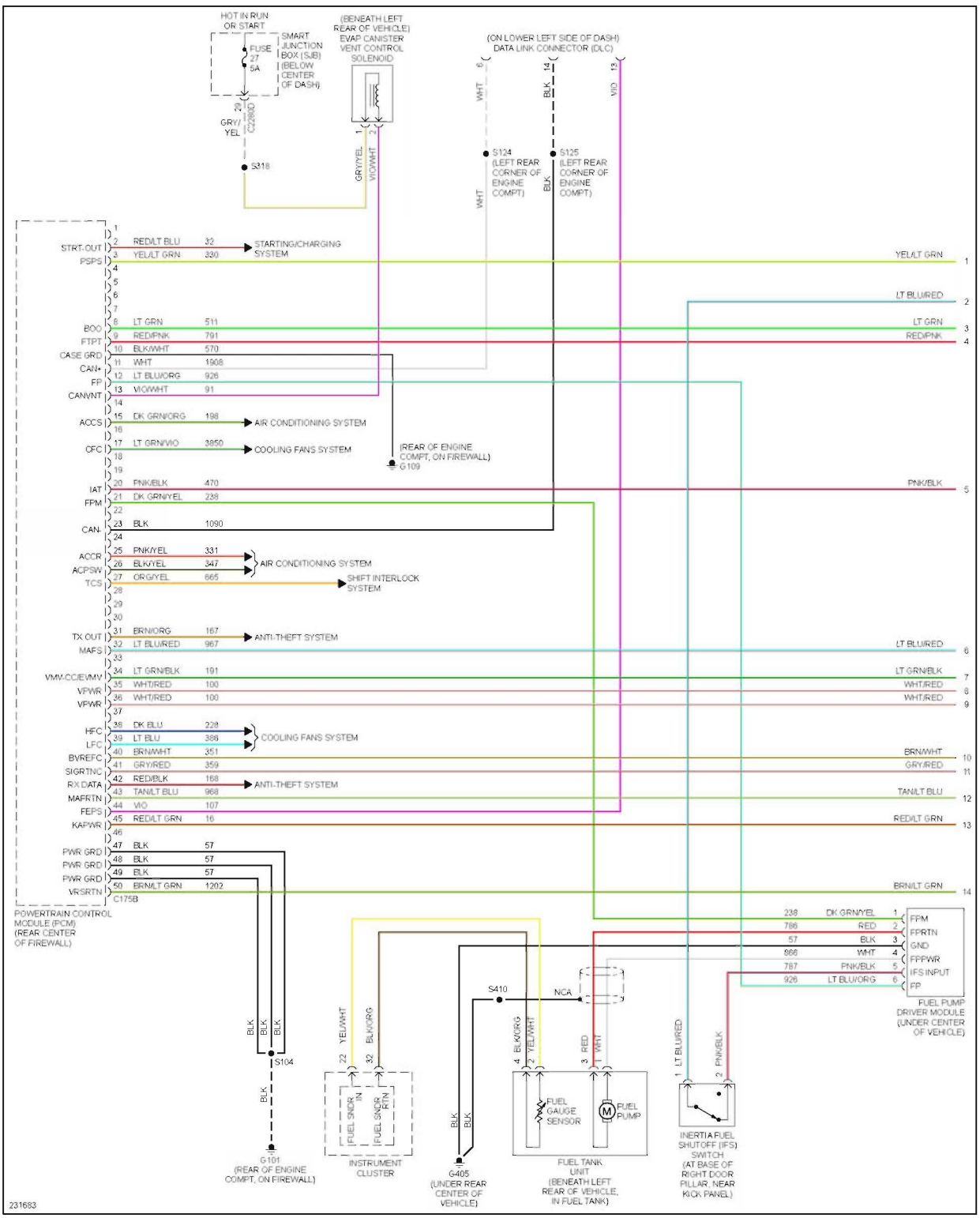

Fig. 32: 2.3L, Engine Performance Circuit, Except Hybrid (1 of 5)

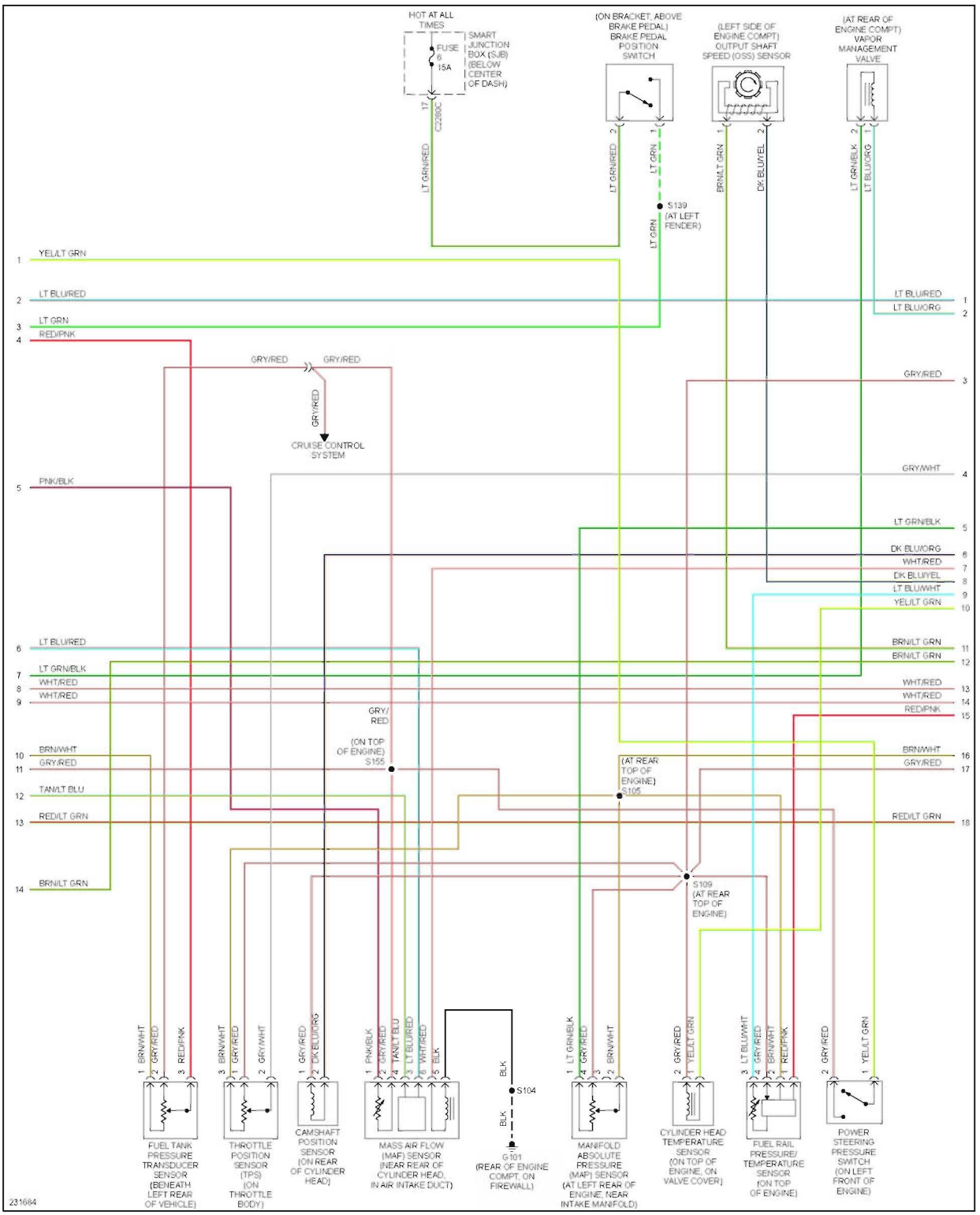

Fig. 33: 2.3L, Engine Performance Circuit, Except Hybrid (2 of 5)

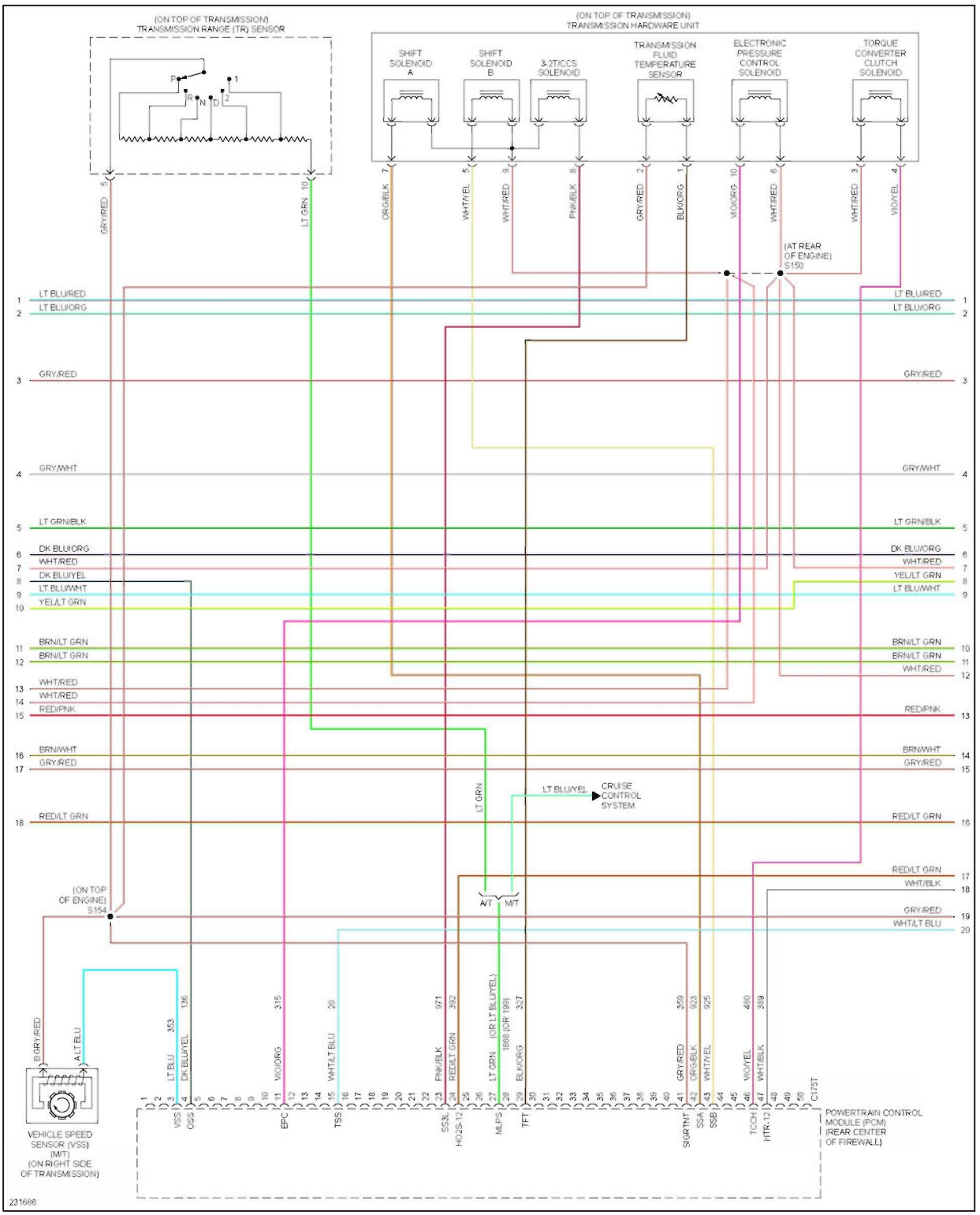

Fig. 34: 2.3L, Engine Performance Circuit, Except Hybrid (3 of 5)

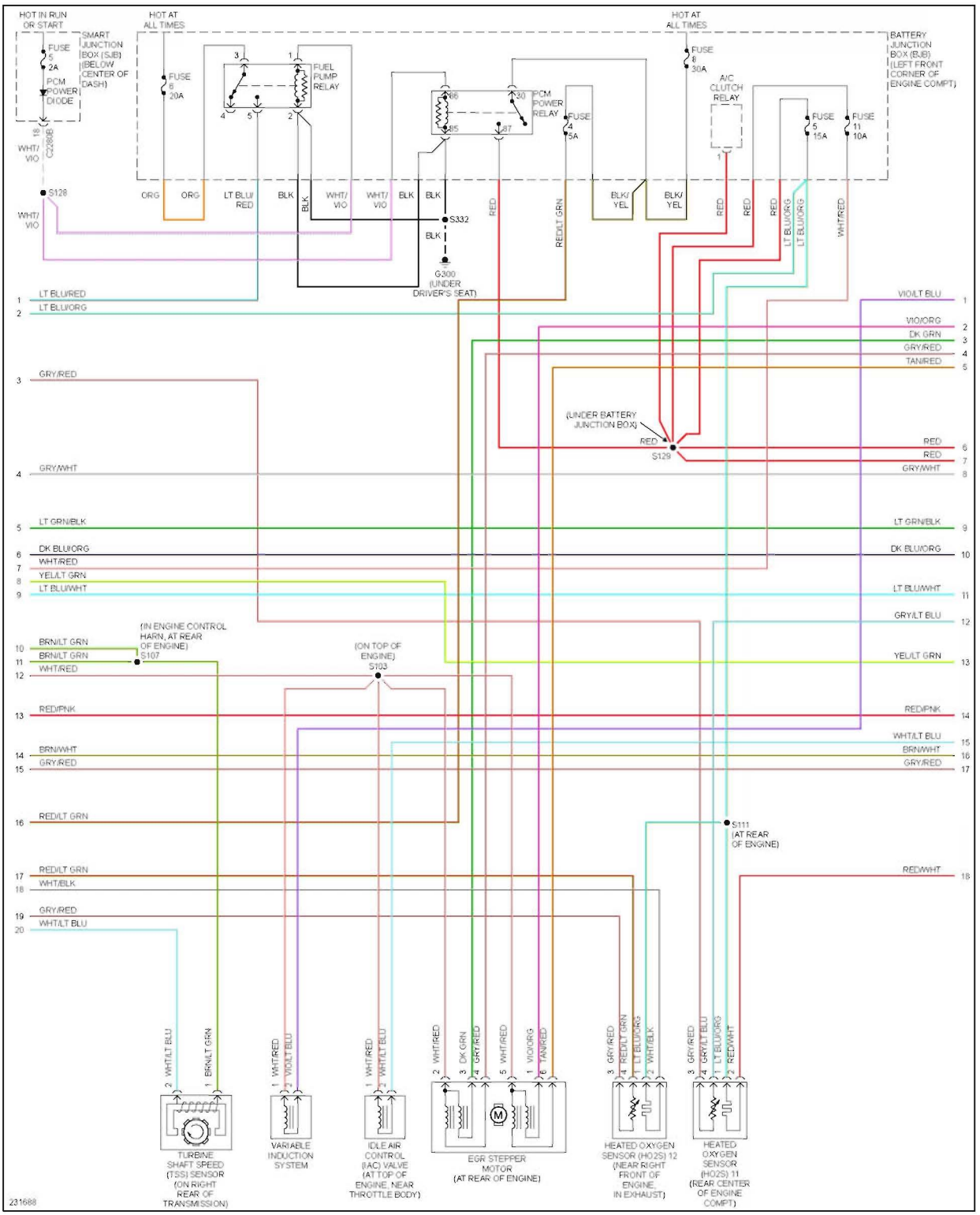

Fig. 35: 2.3L, Engine Performance Circuit, Except Hybrid (4 of 5)

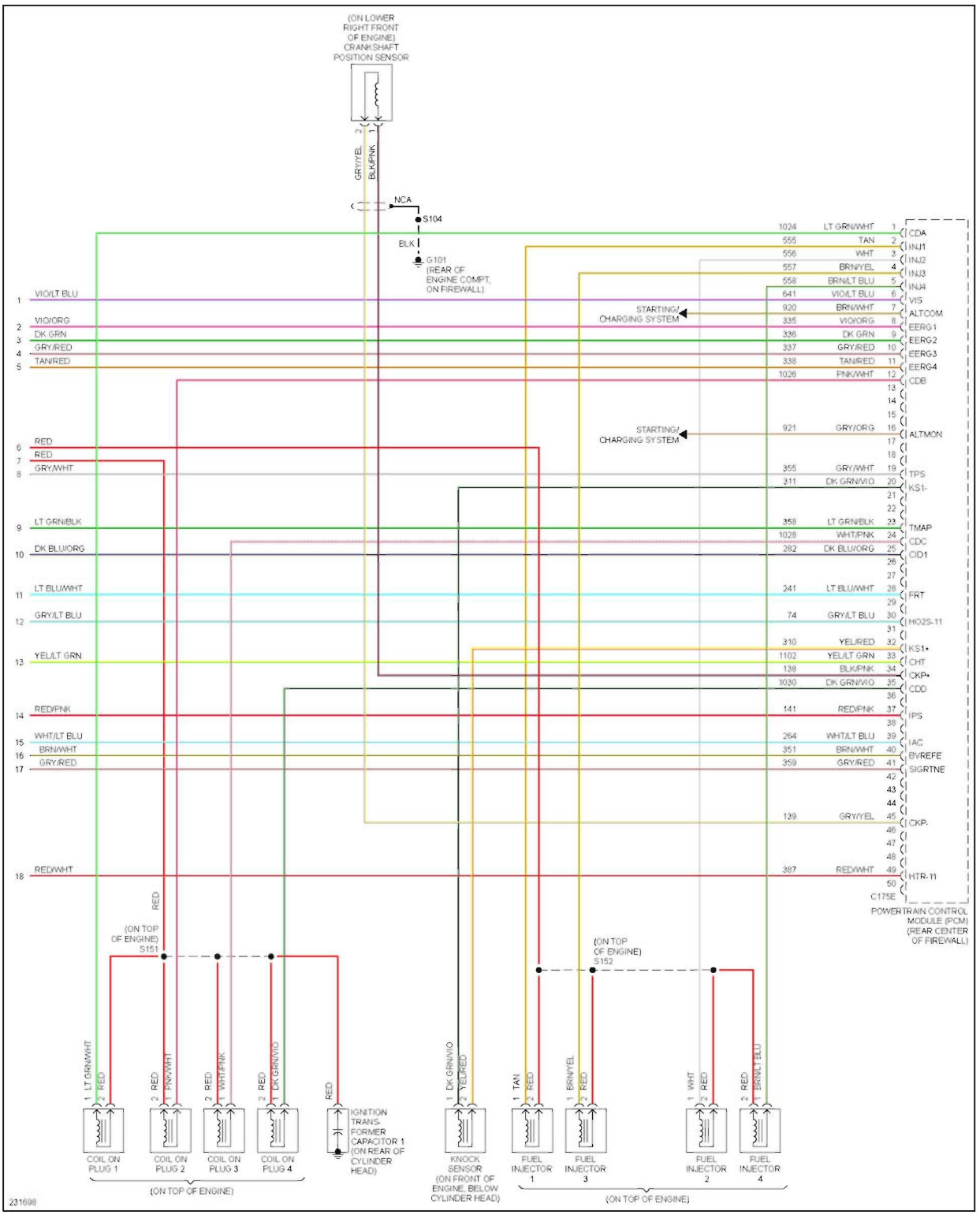

Fig. 36: 2.3L, Engine Performance Circuit, Except Hybrid (5 of 5)

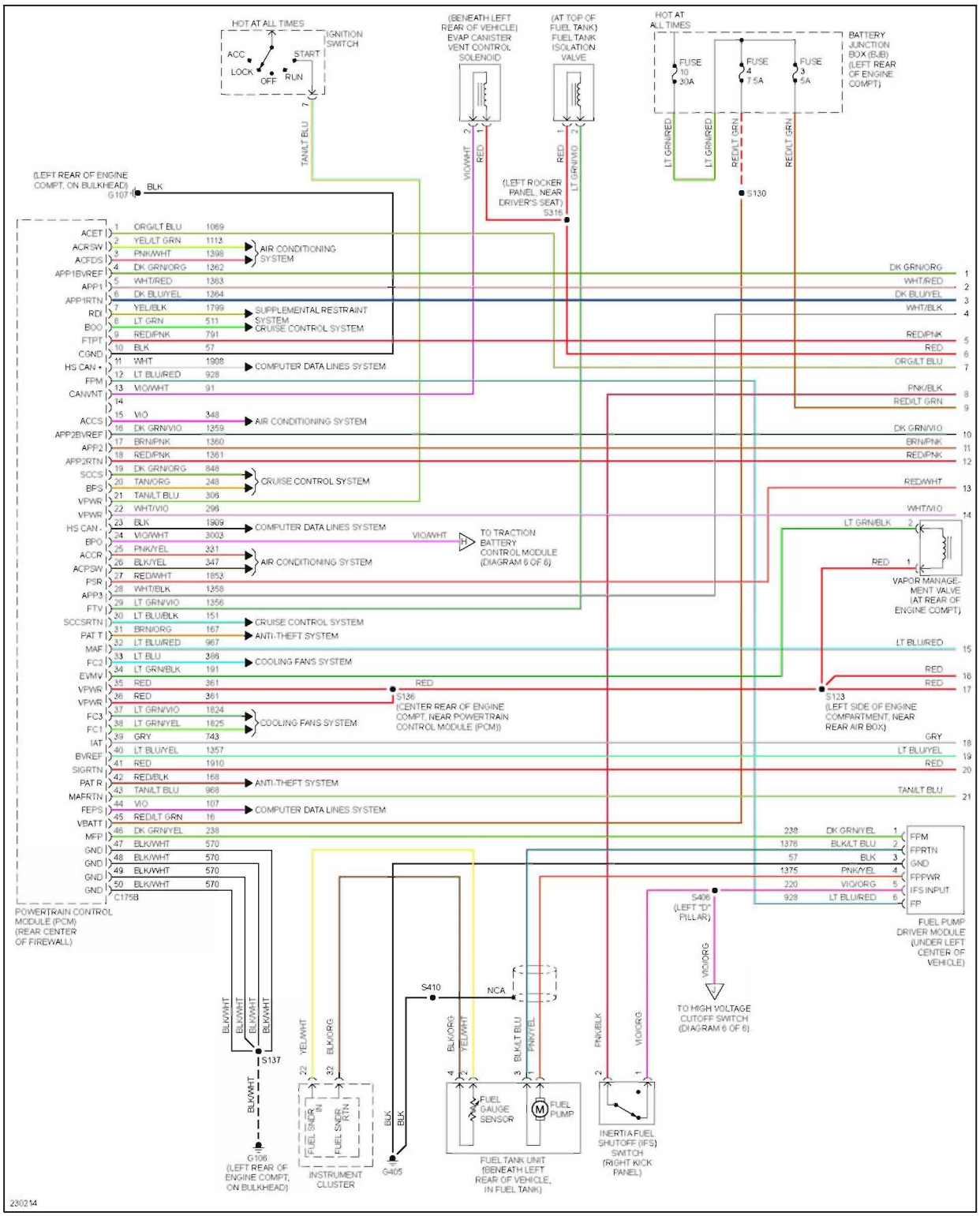

Fig. 37: 2.3L, Engine Performance Circuit, Hybrid (1 of 6)

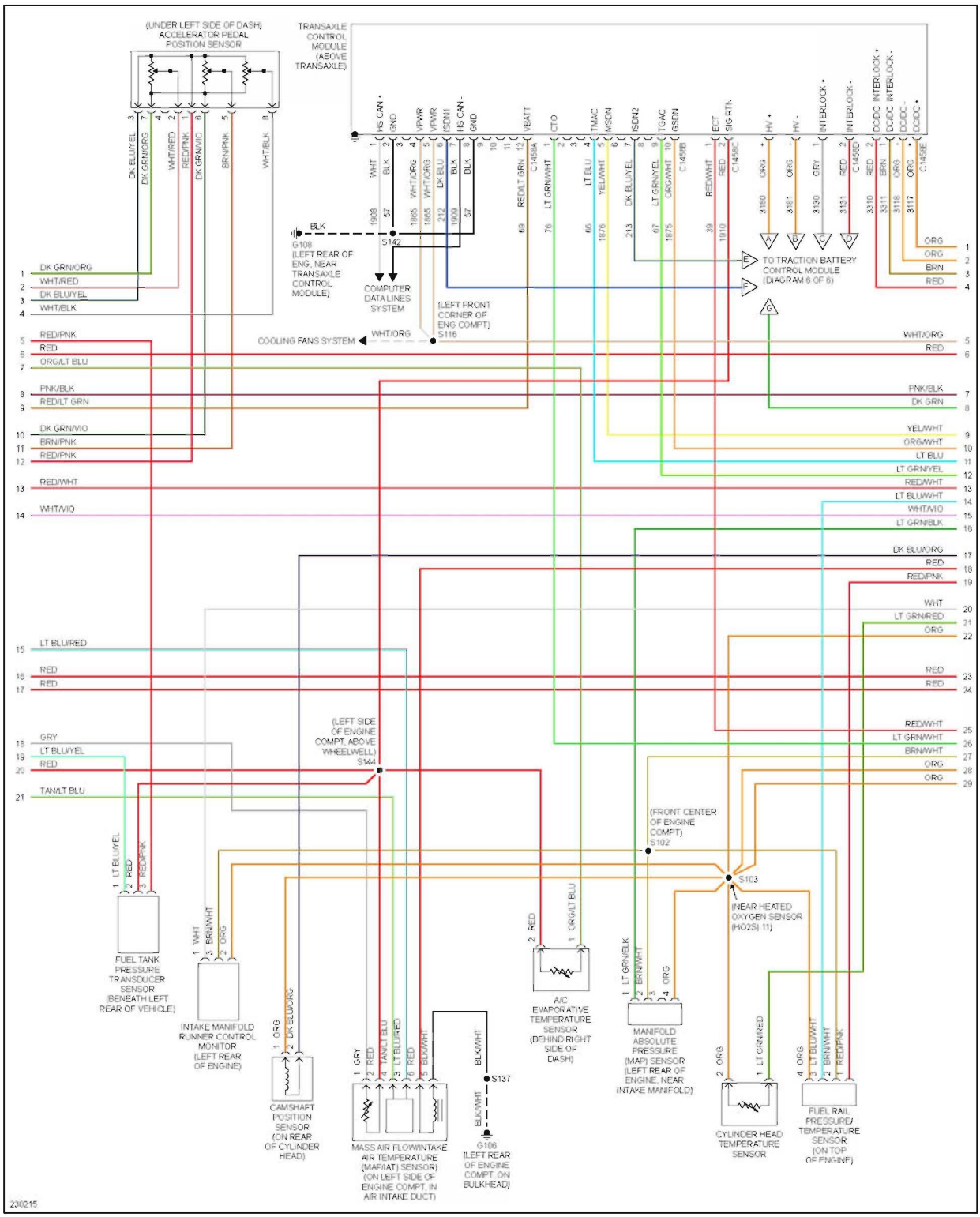

Fig. 38: 2.3L, Engine Performance Circuit, Hybrid (2 of 6)

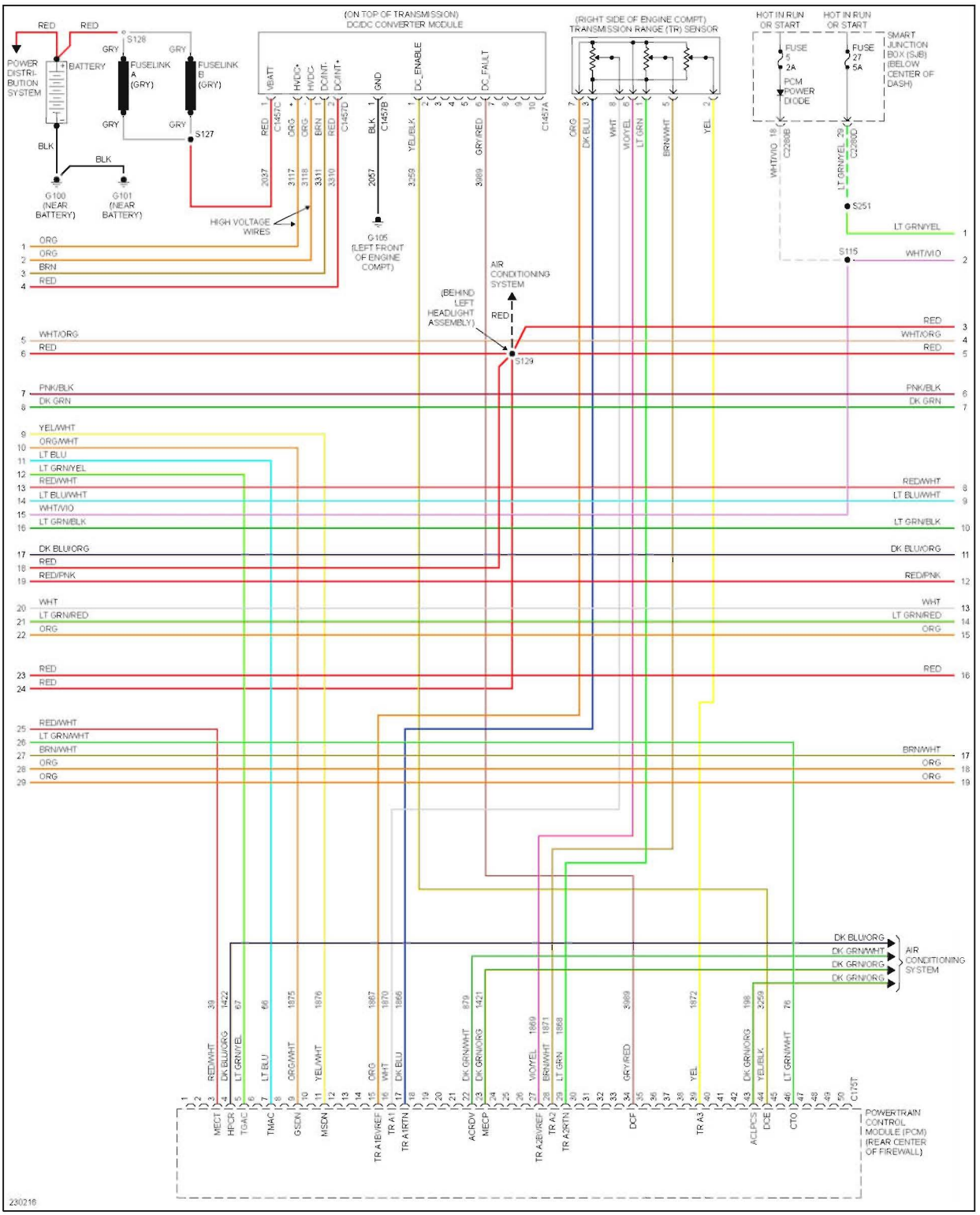

Fig. 39: 2.3L, Engine Performance Circuit, Hybrid (3 of 6)

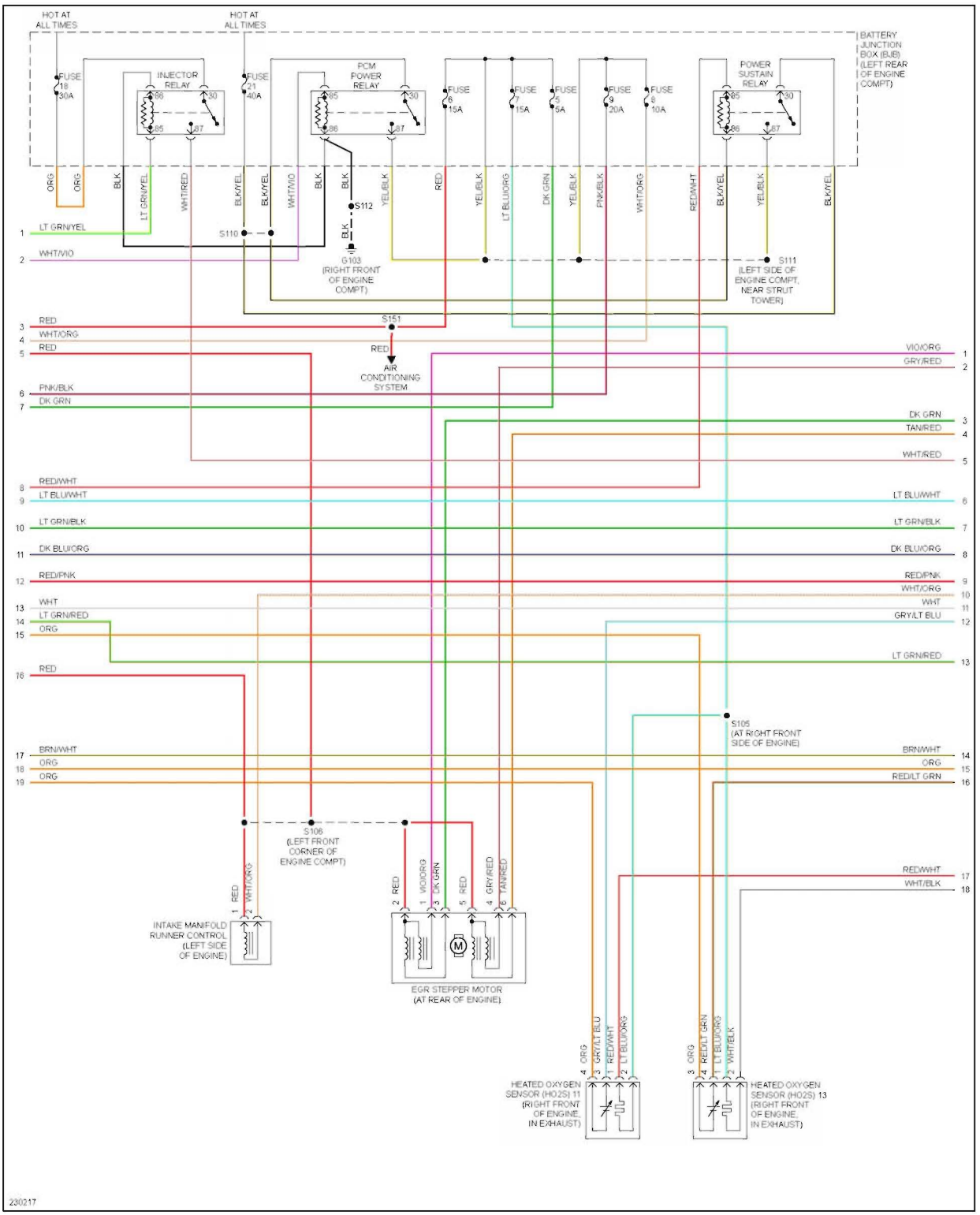

Fig. 40: 2.3L, Engine Performance Circuit, Hybrid (4 of 6)

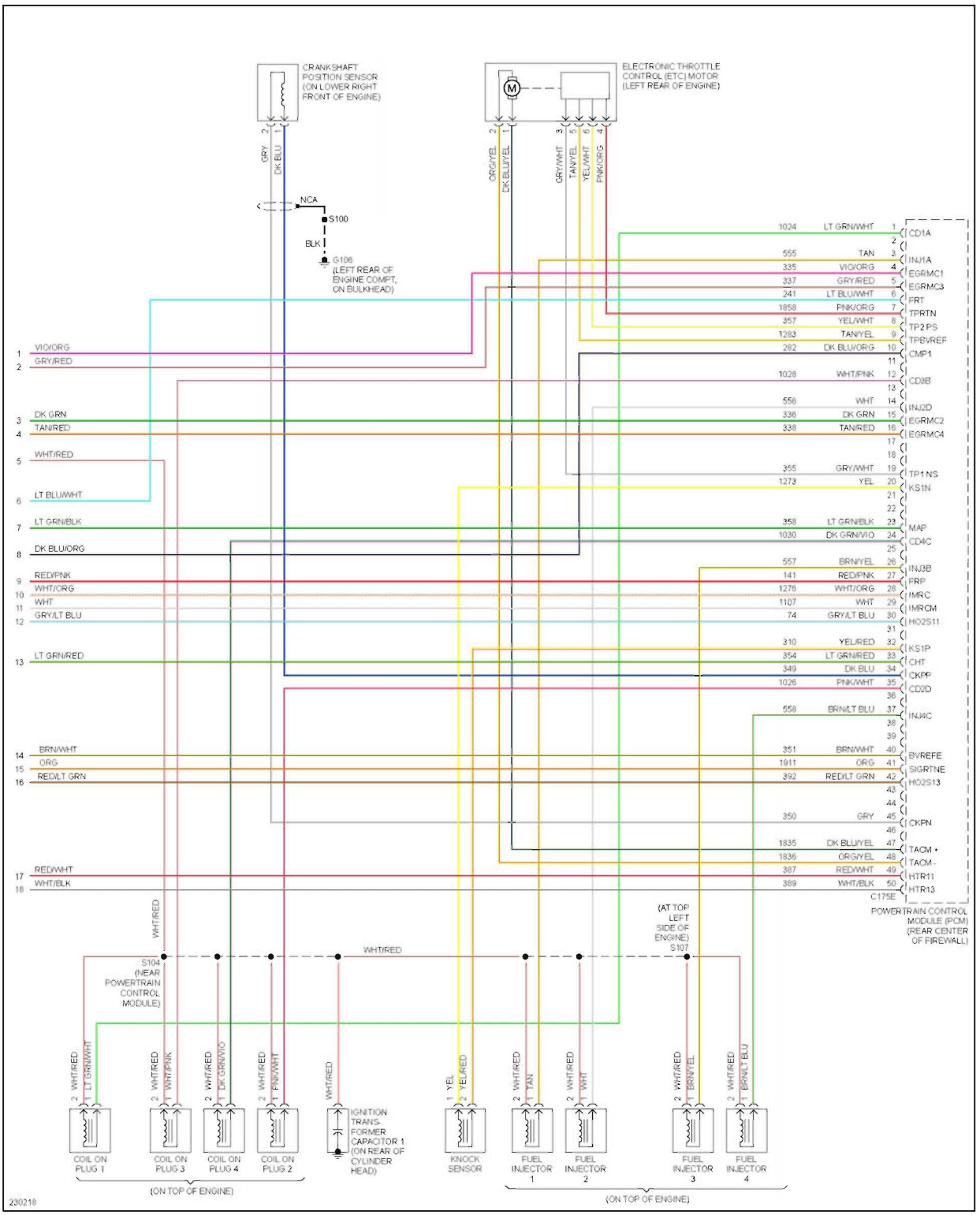

Fig. 41: 2.3L, Engine Performance Circuit, Hybrid (5 of 6)

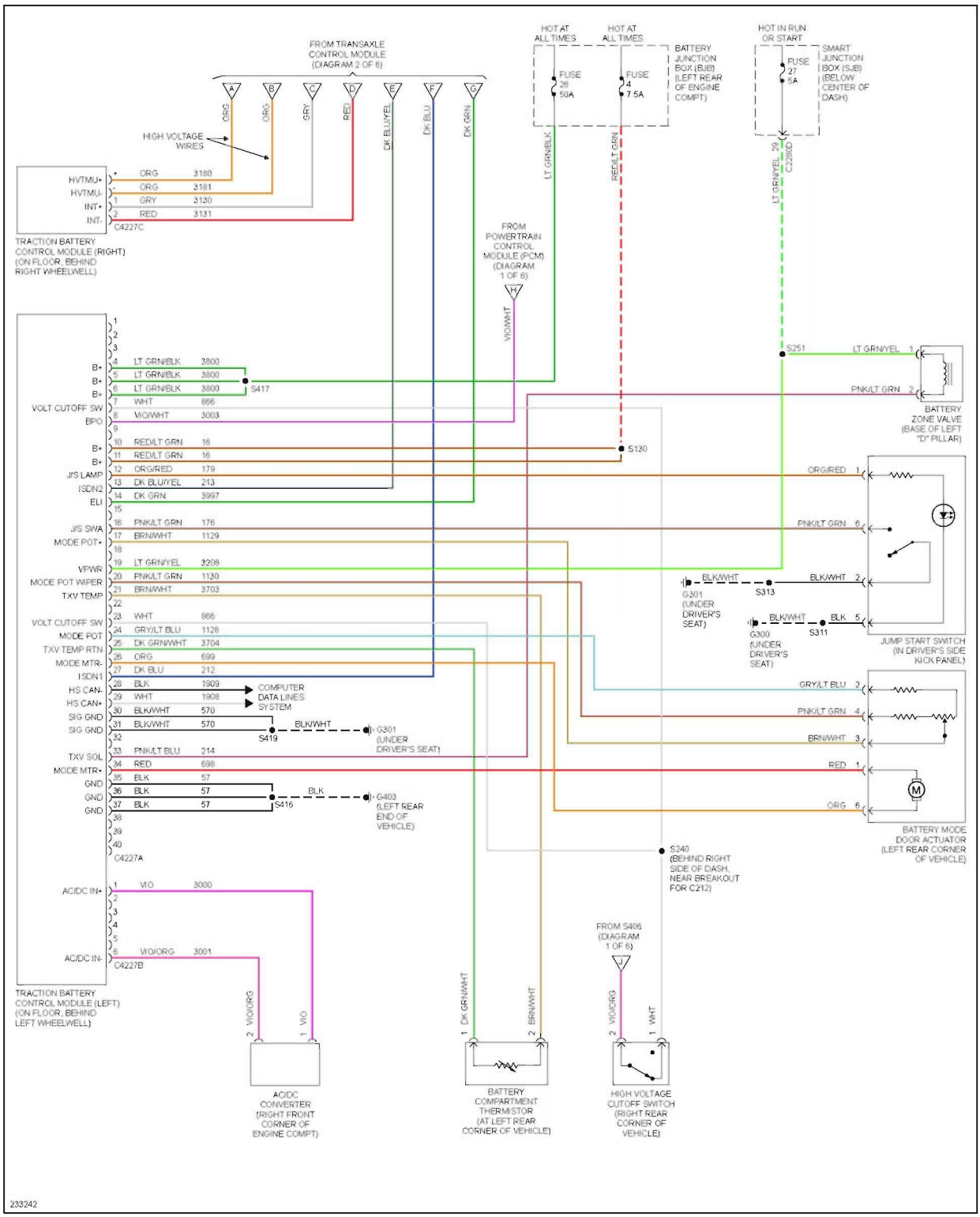

Fig. 42: 2.3L, Engine Performance Circuit, Hybrid (6 of 6)

3.0L

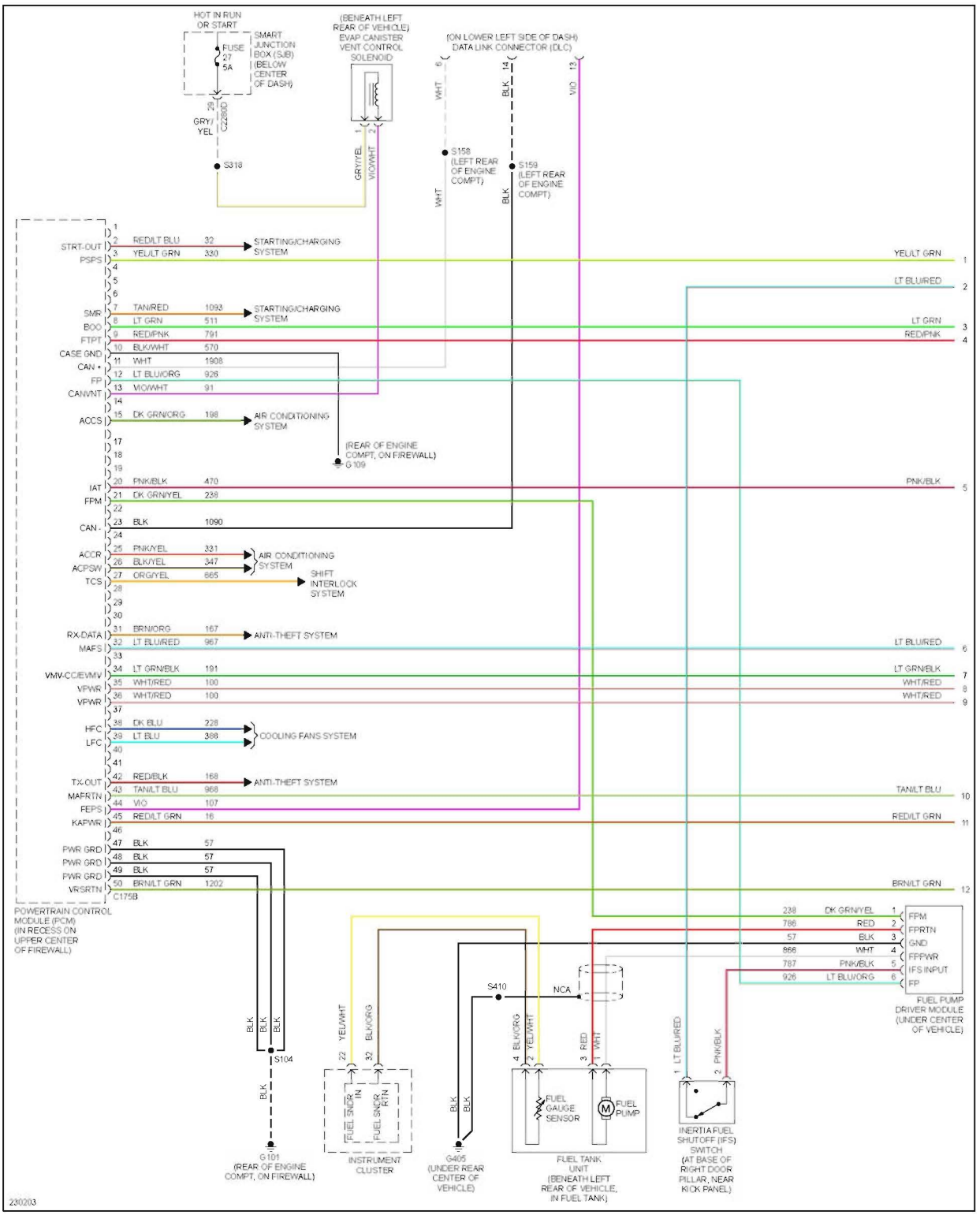

Fig. 43: 3.0L, Engine Performance Circuit (1 of 5)

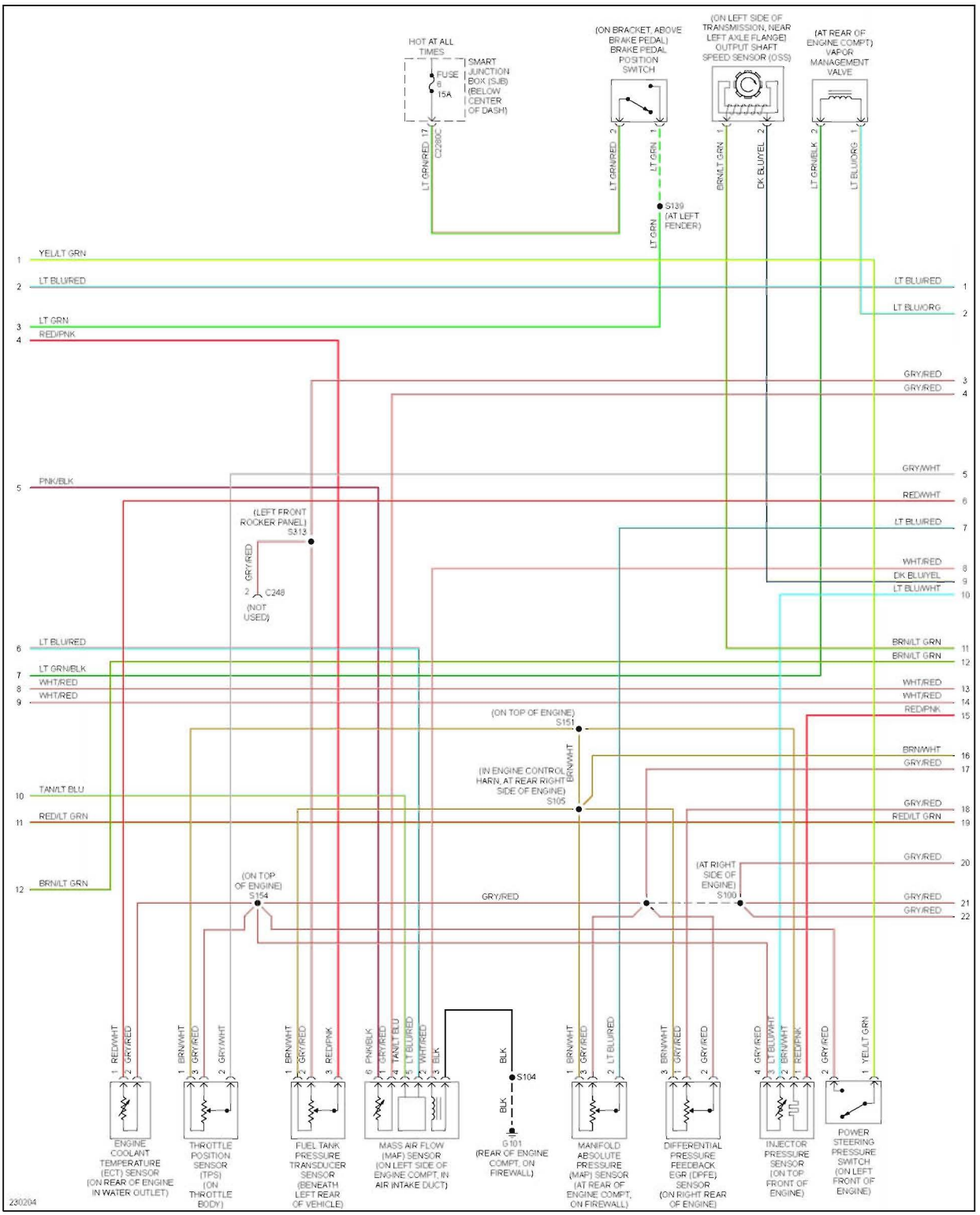

Fig. 44: 3.0L, Engine Performance Circuit (2 of 5)

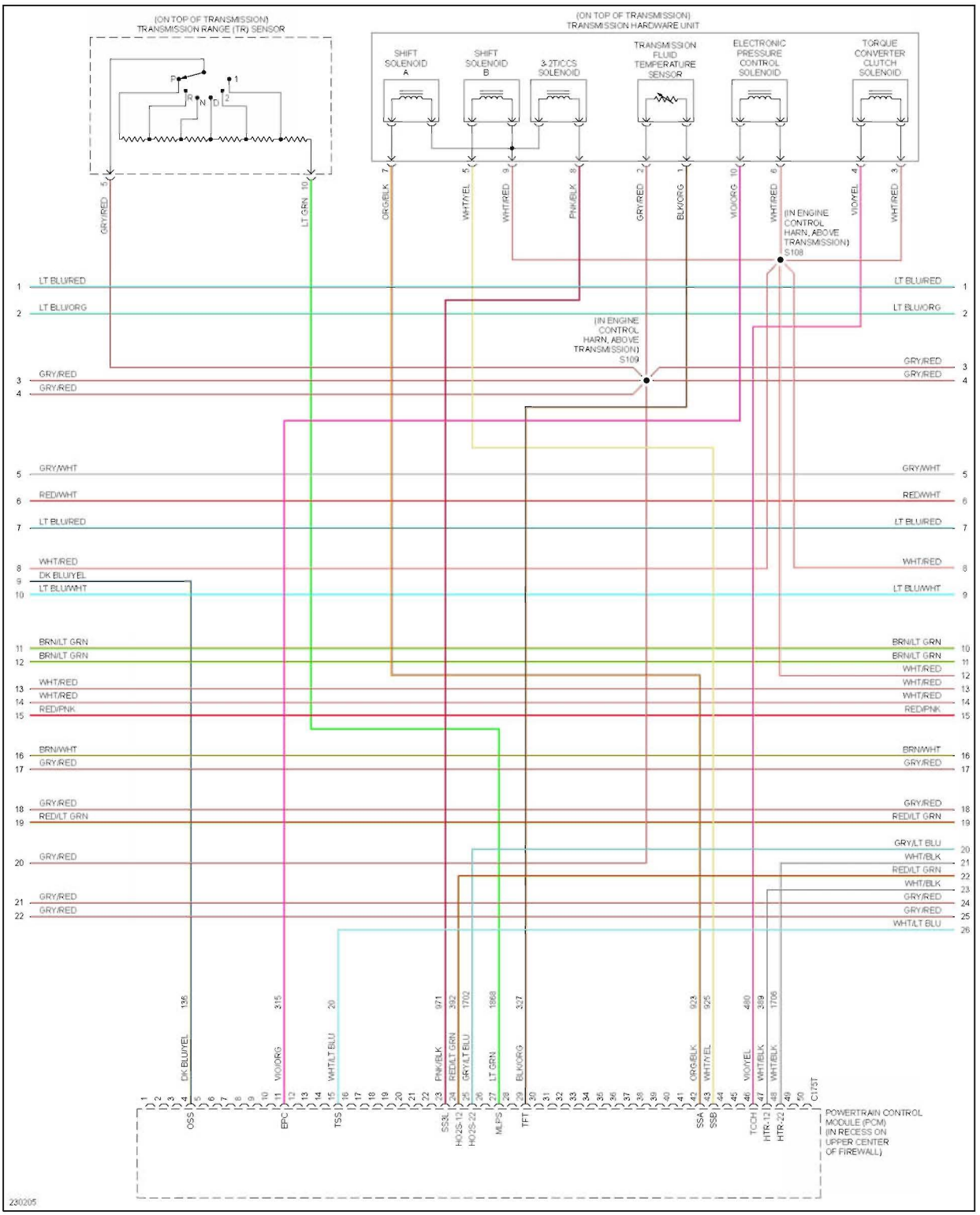

Fig. 45: 3.0L, Engine Performance Circuit (3 of 5)

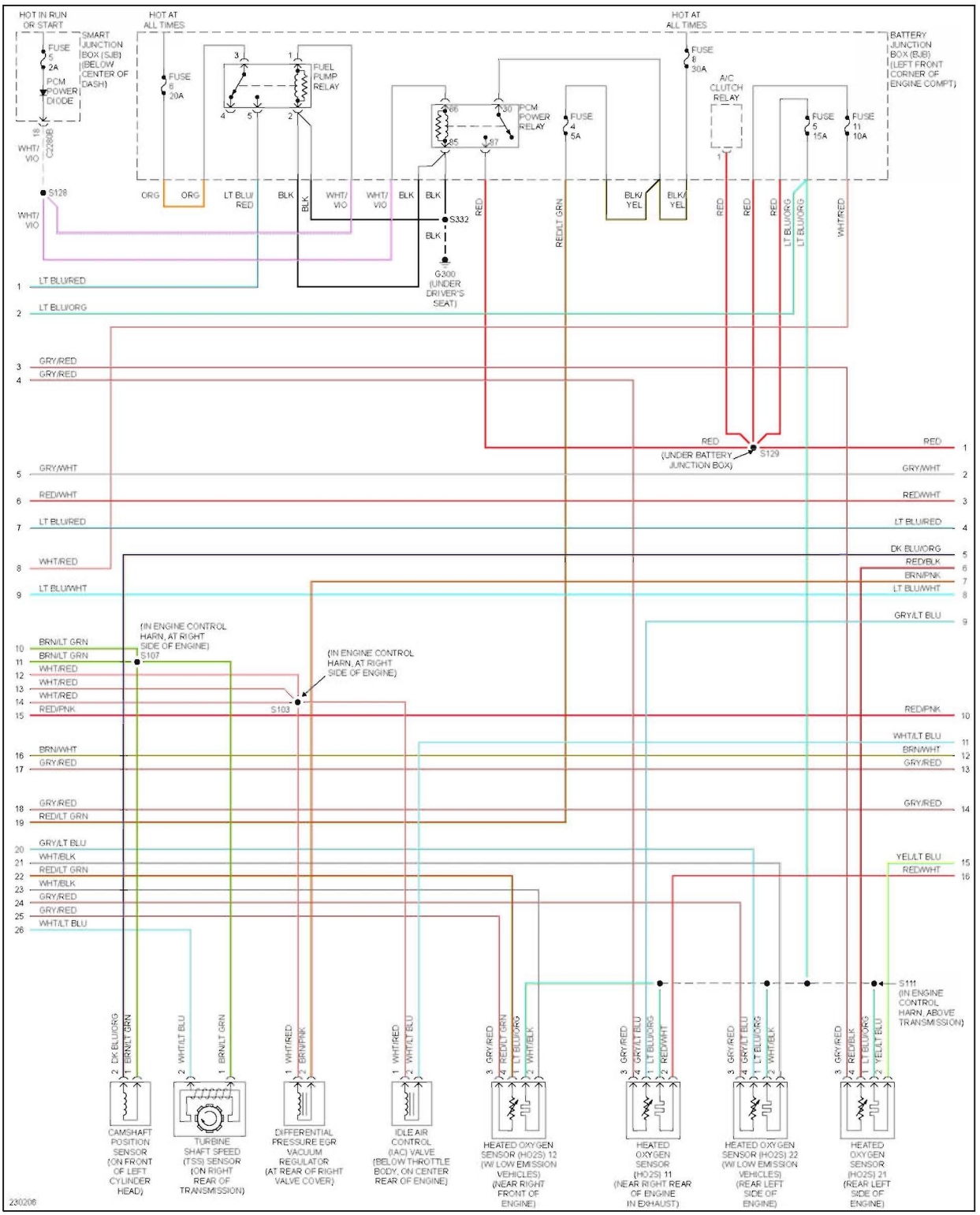

Fig. 46: 3.0L, Engine Performance Circuit (4 of 5)

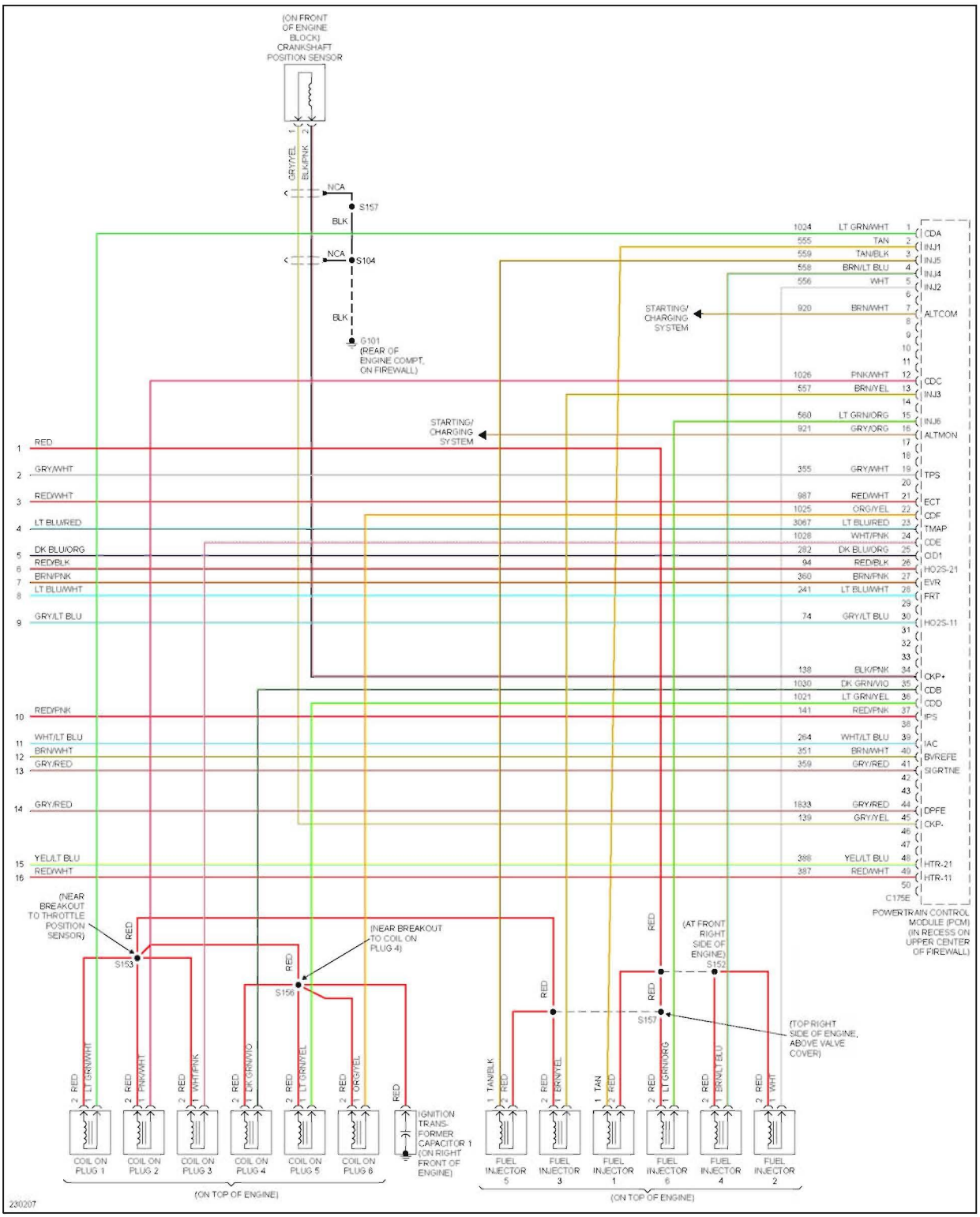

Fig. 47: 3.0L, Engine Performance Circuit (5 of 5)

EXTERIOR LIGHTS

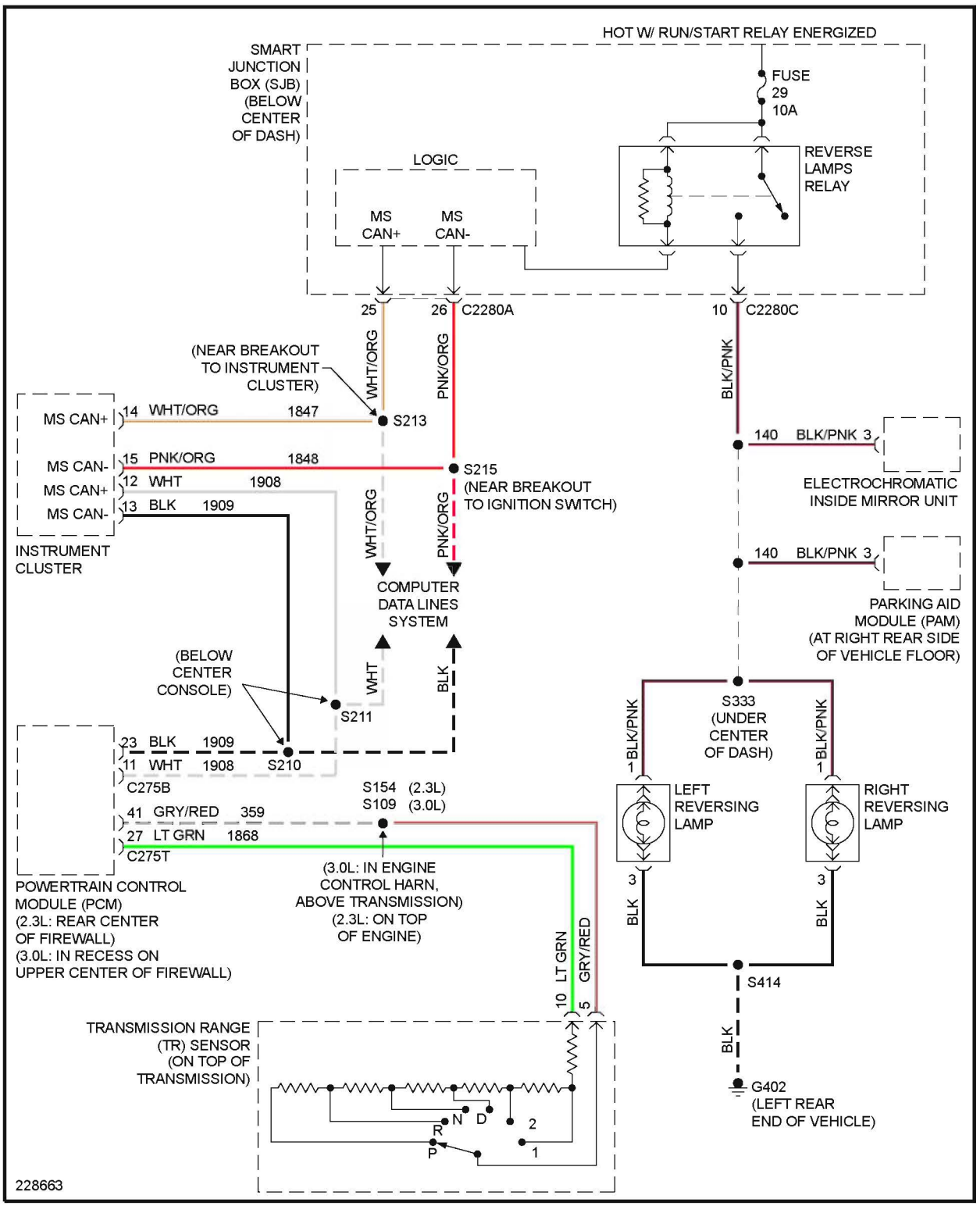

Fig. 48: Back-up Lamps Circuit, A/T Except Hybrid

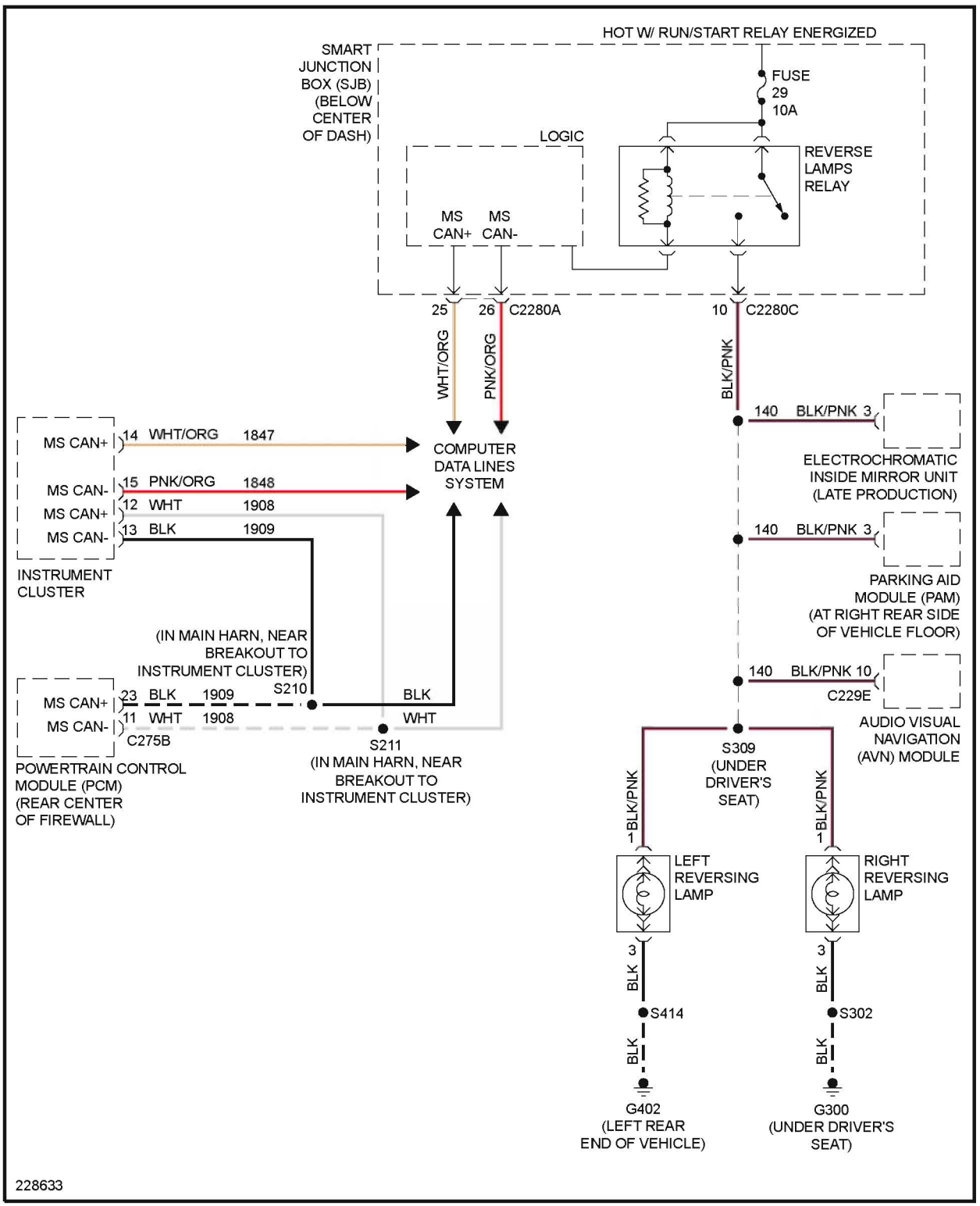

Fig. 49: Back-up Lamps Circuit, Hybrid

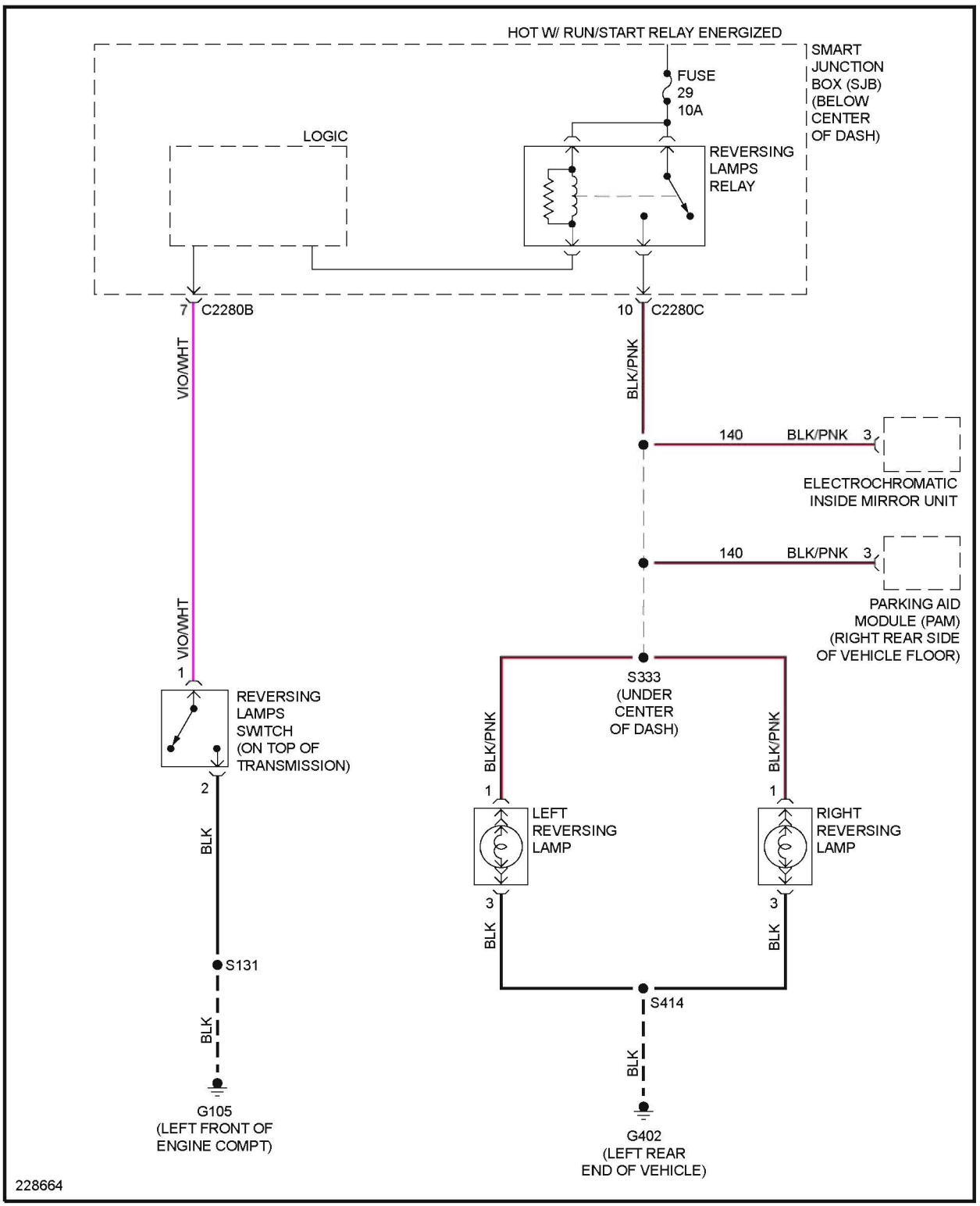

Fig. 50: Back-up Lamps Circuit, M/T Except Hybrid

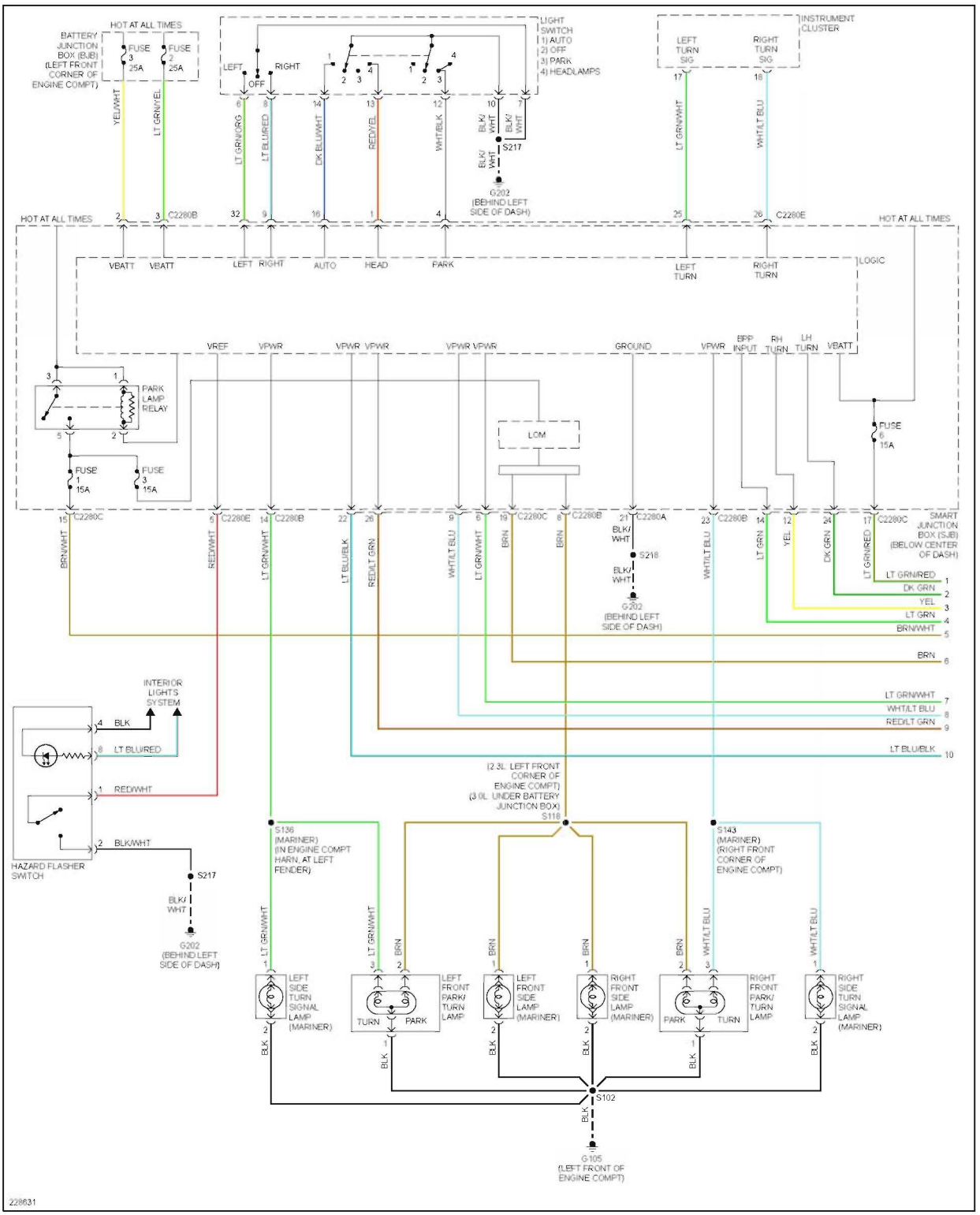

Fig. 51: Exterior Lamps Circuit, Except Hybrid (1 of 2)

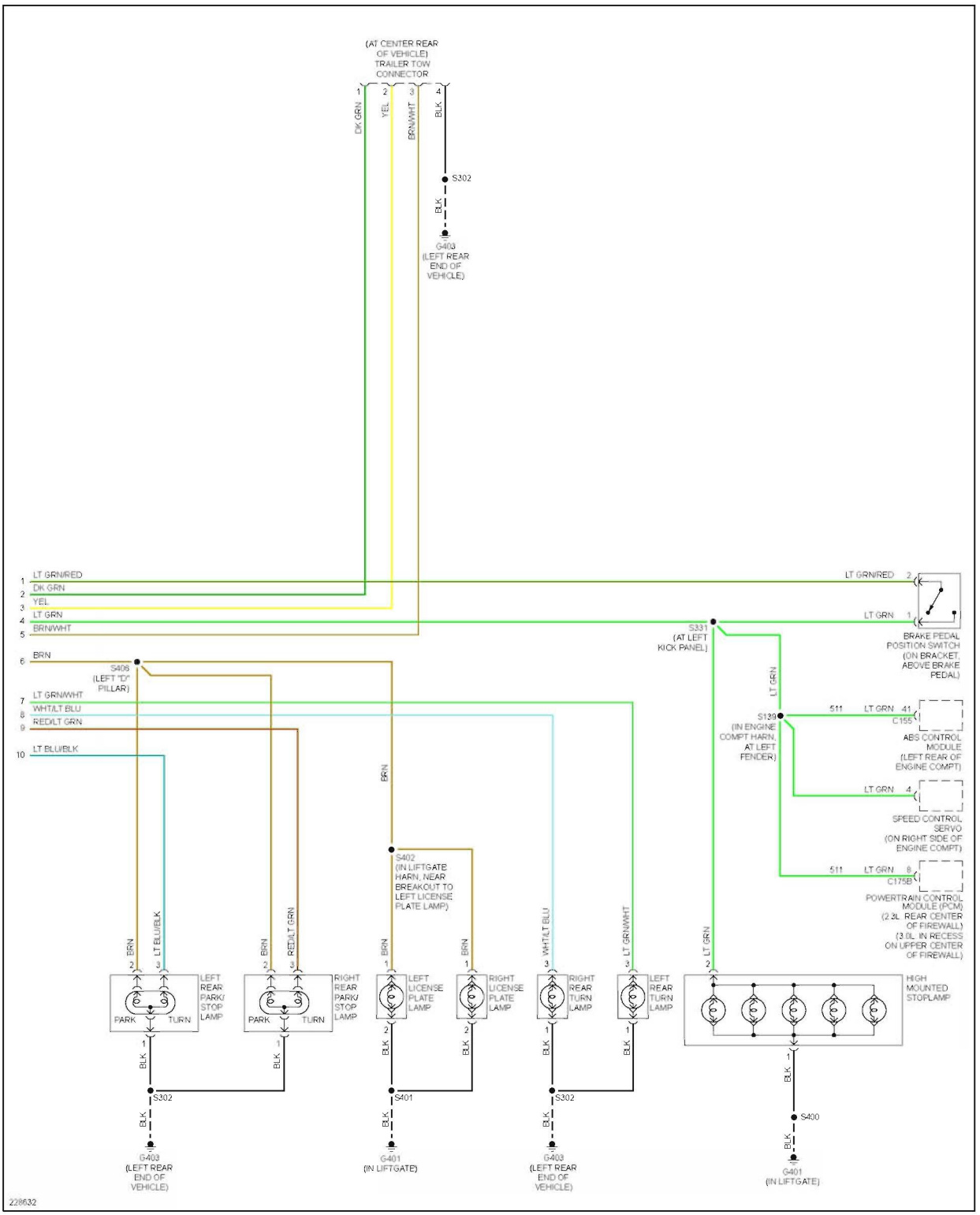

Fig. 52: Exterior Lamps Circuit, Except Hybrid (2 of 2)

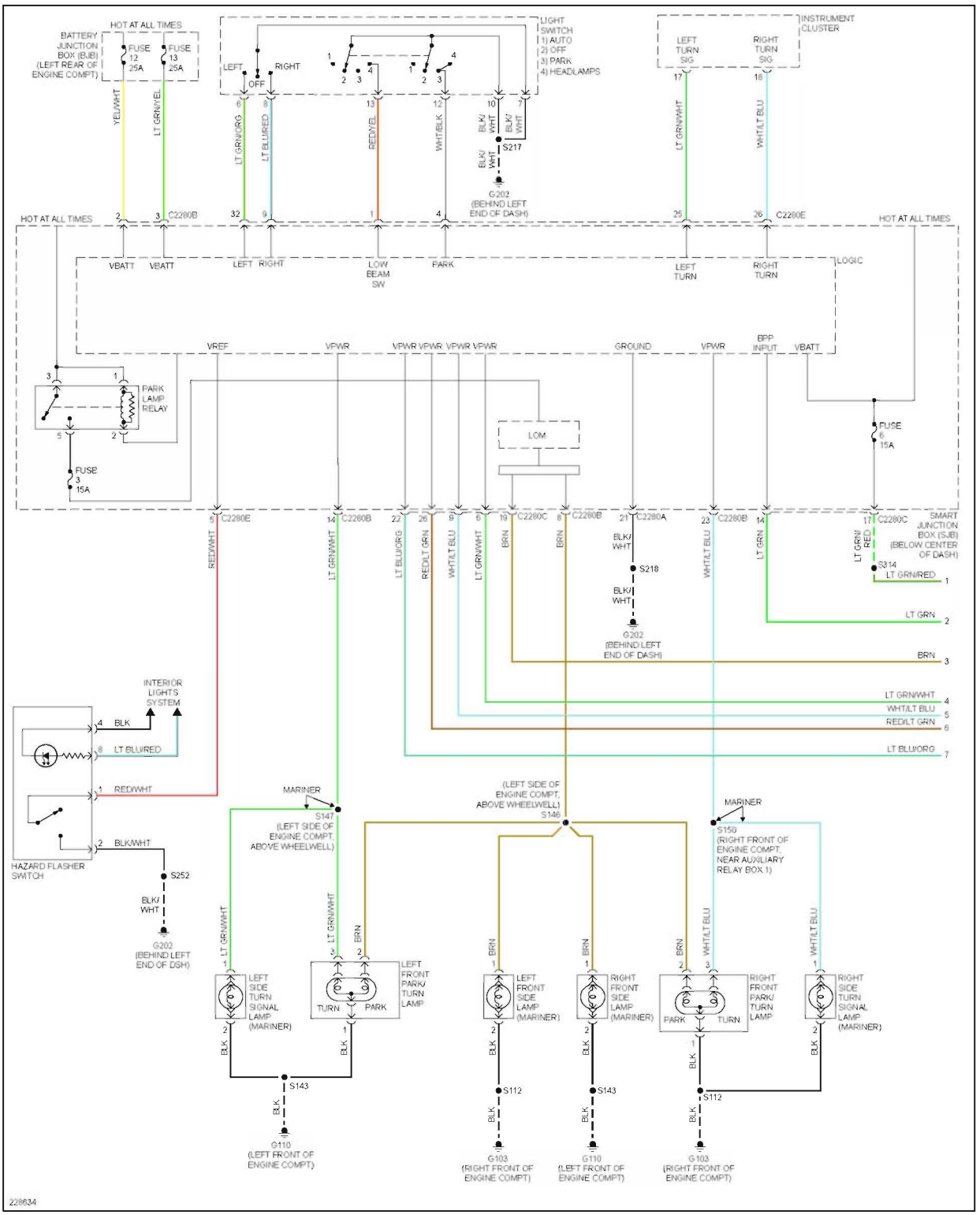

Fig. 53: Exterior Lamps Circuit, Hybrid (1 of 2)

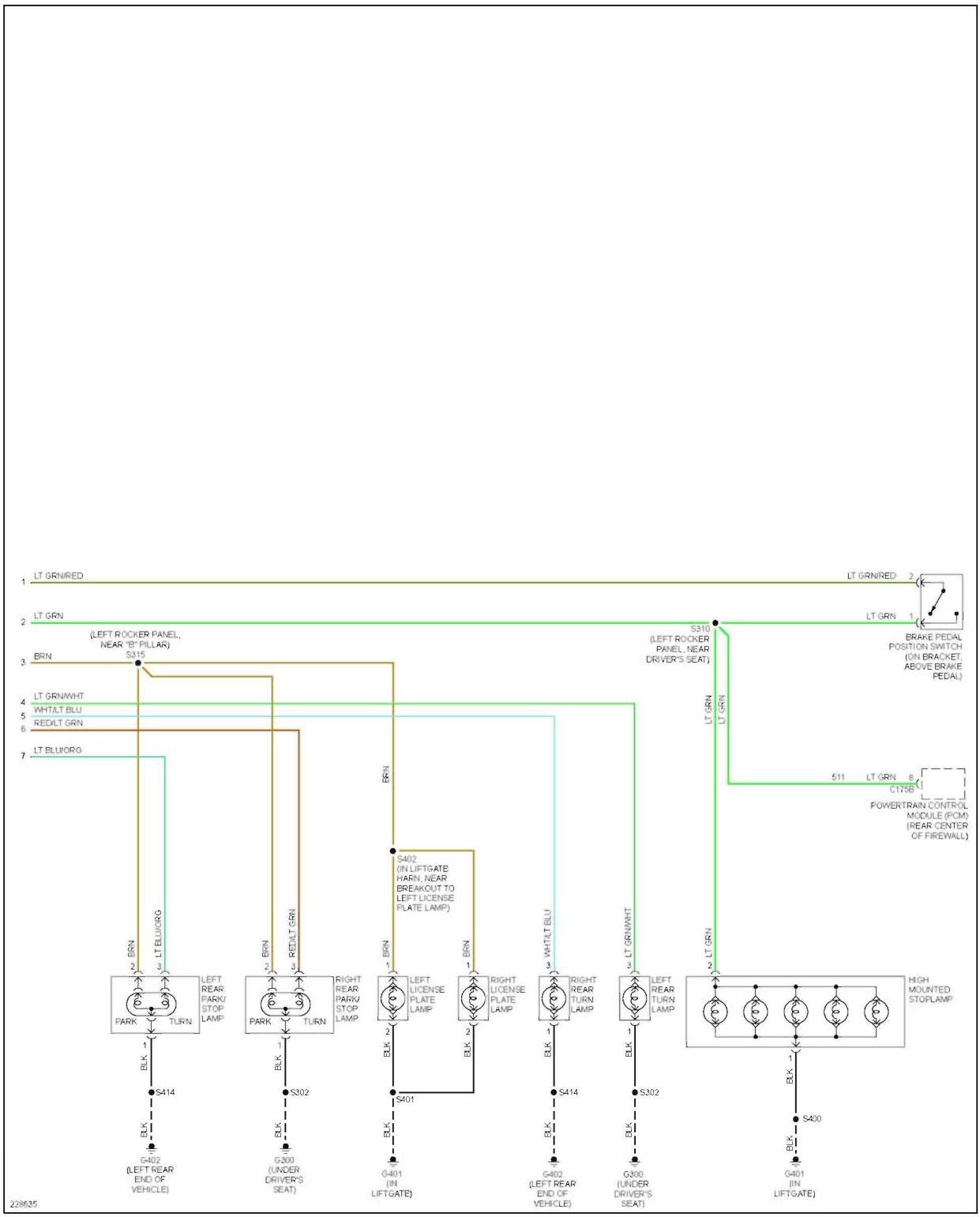

Fig. 54: Exterior Lamps Circuit, Hybrid (2 of 2)

GROUND DISTRIBUTION

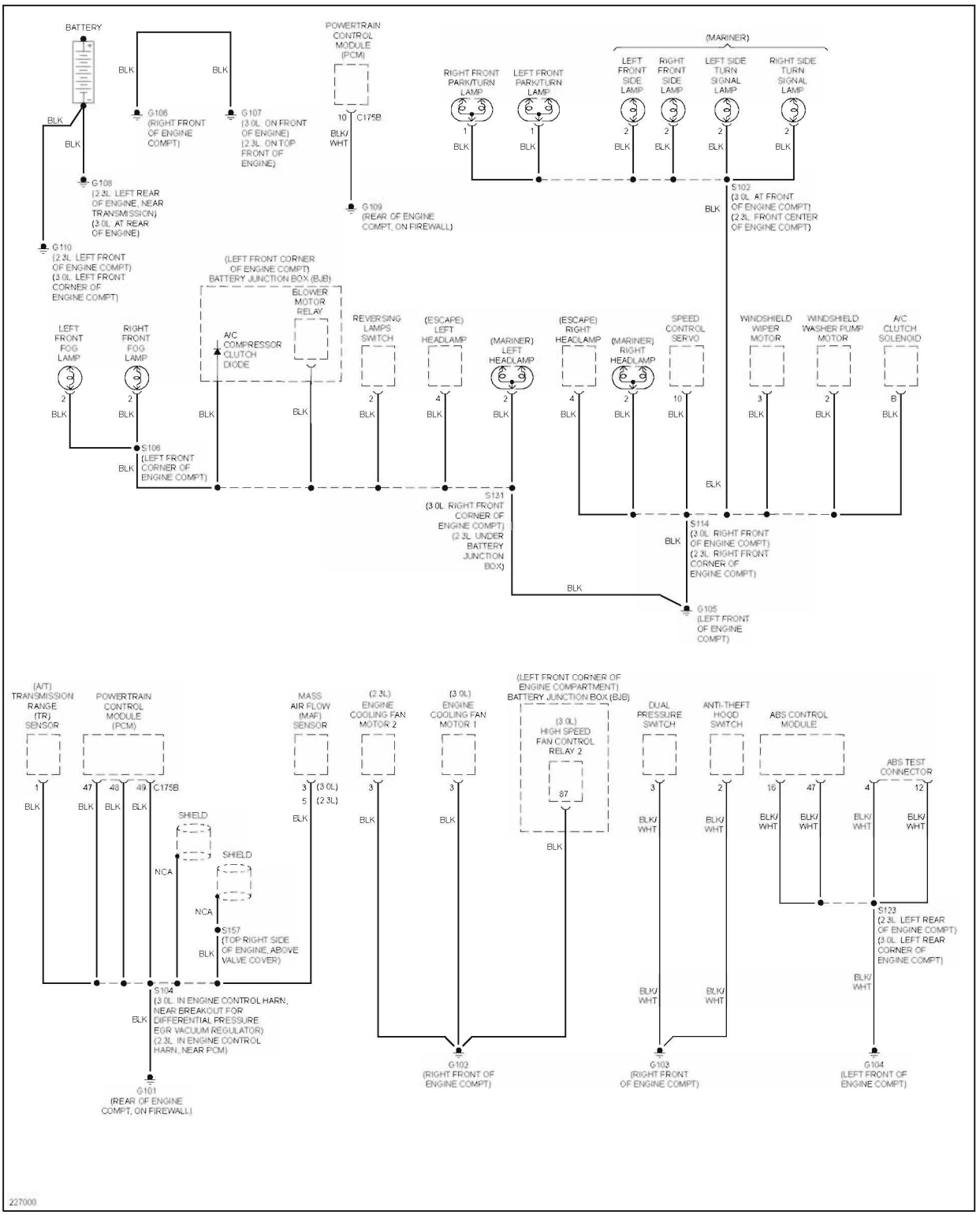

Fig. 55: Ground Distribution Circuit, Except Hybrid (1 of 3)

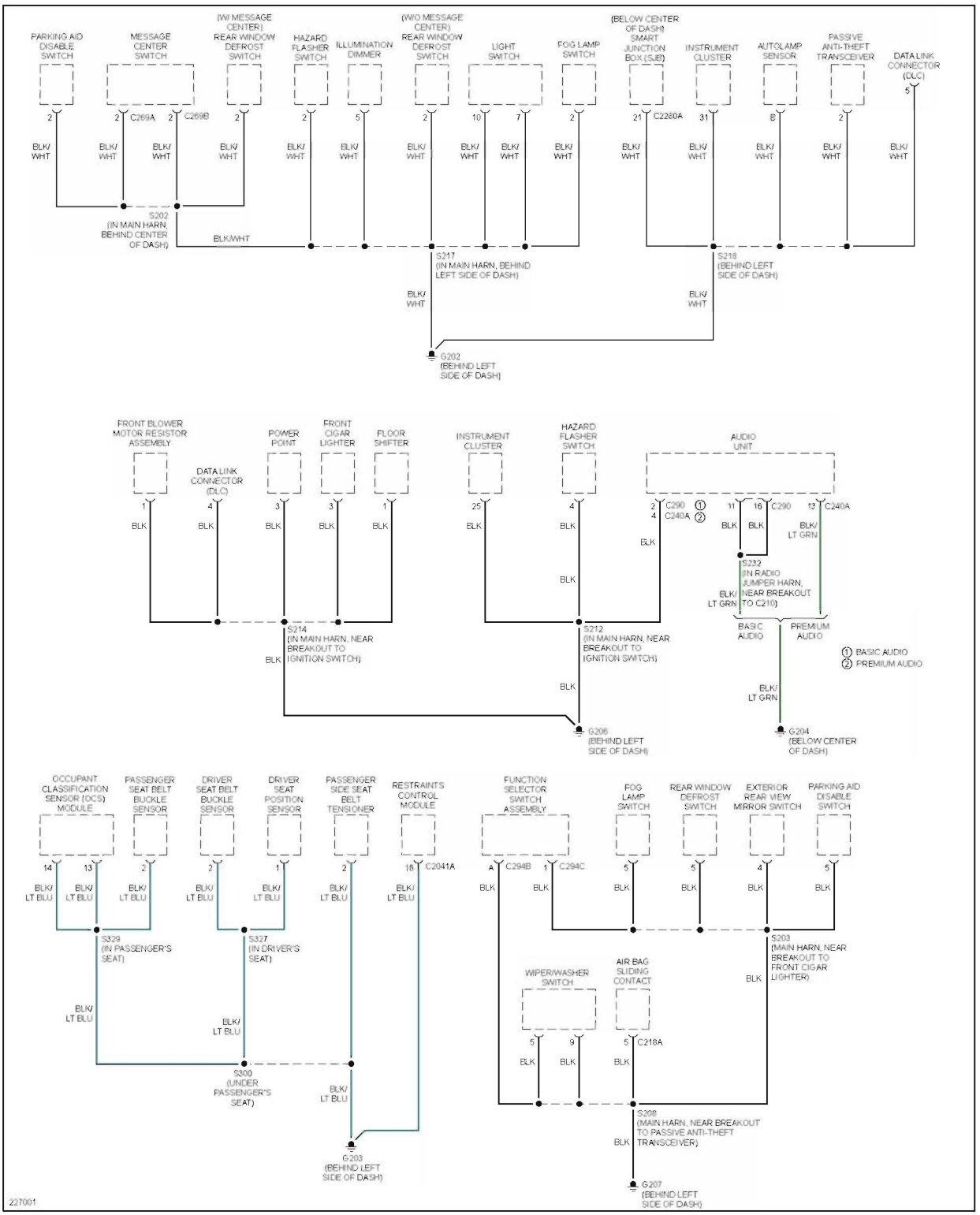

Fig. 56: Ground Distribution Circuit, Except Hybrid (2 of 3)

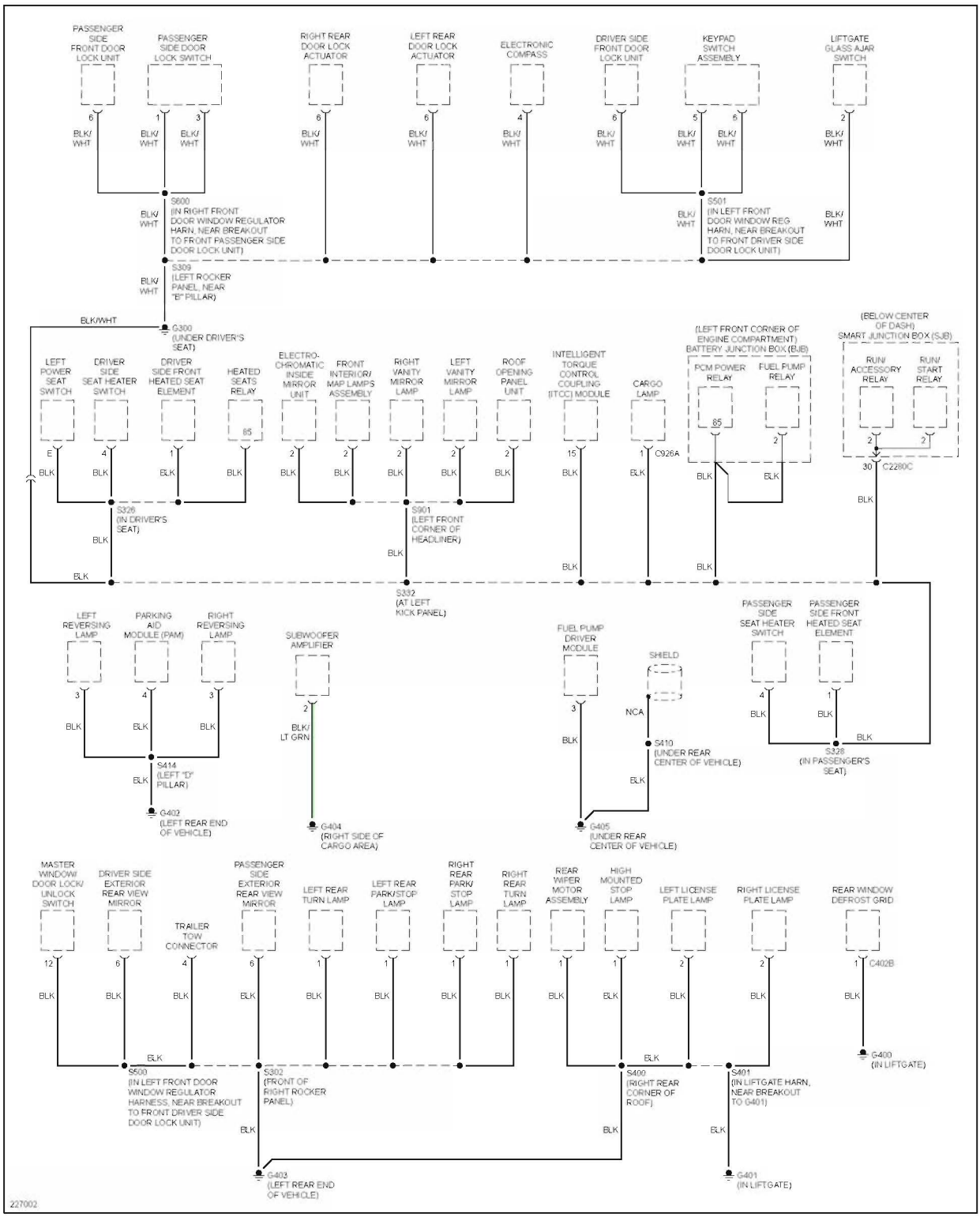

Fig. 57: Ground Distribution Circuit, Except Hybrid (3 of 3)

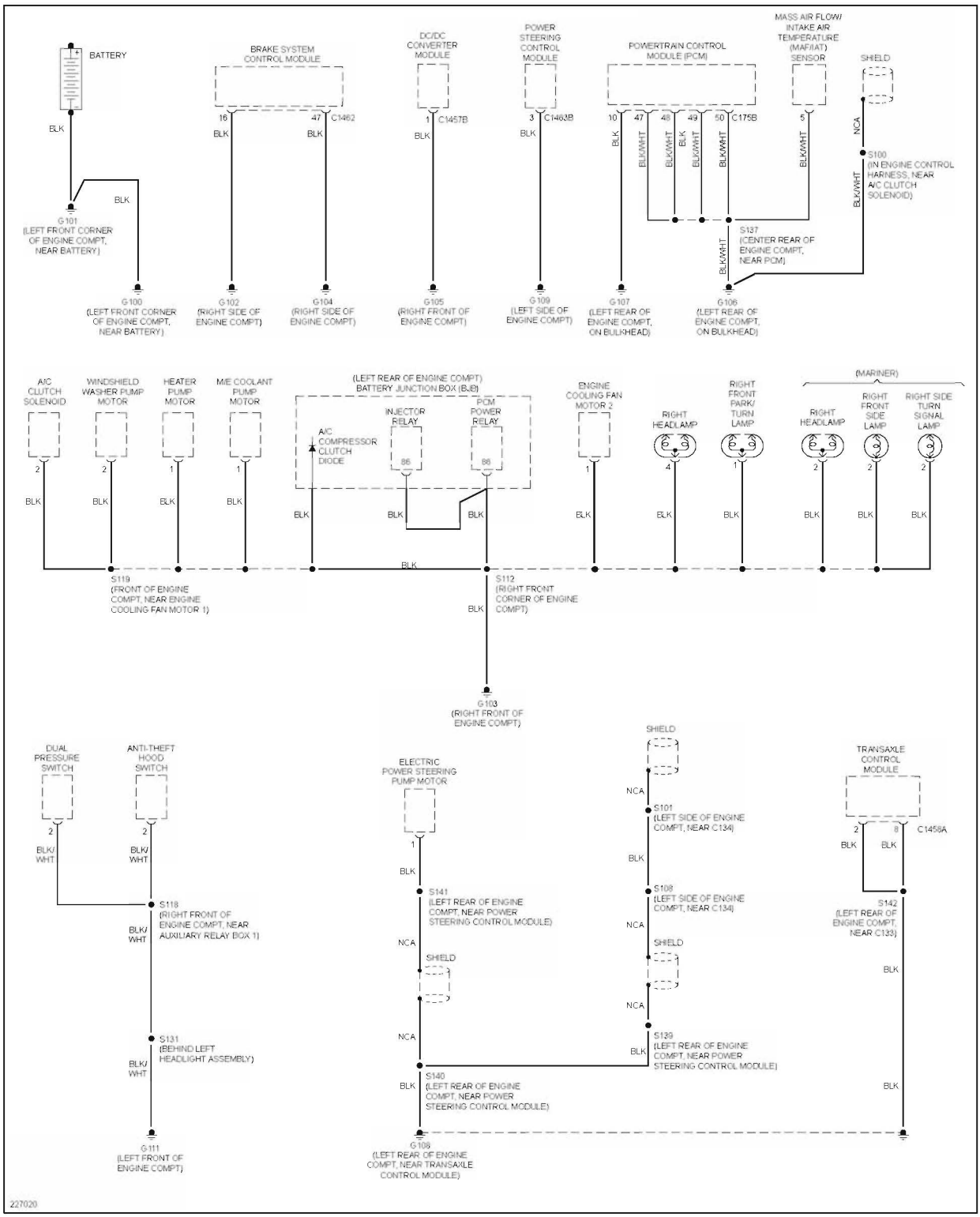

Fig. 58: Ground Distribution Circuit, Hybrid (1 of 4)

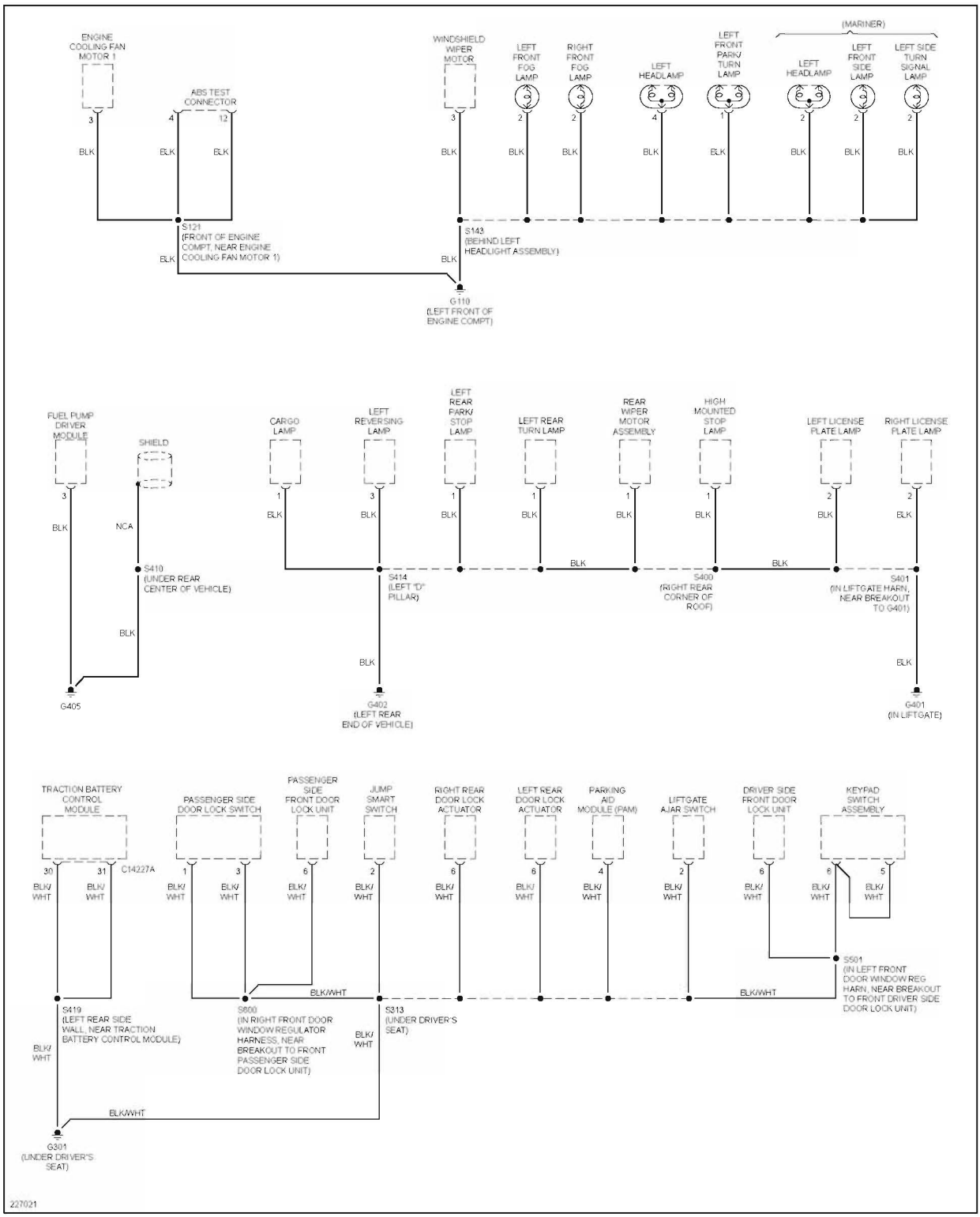

Fig. 59: Ground Distribution Circuit, Hybrid (2 of 4)

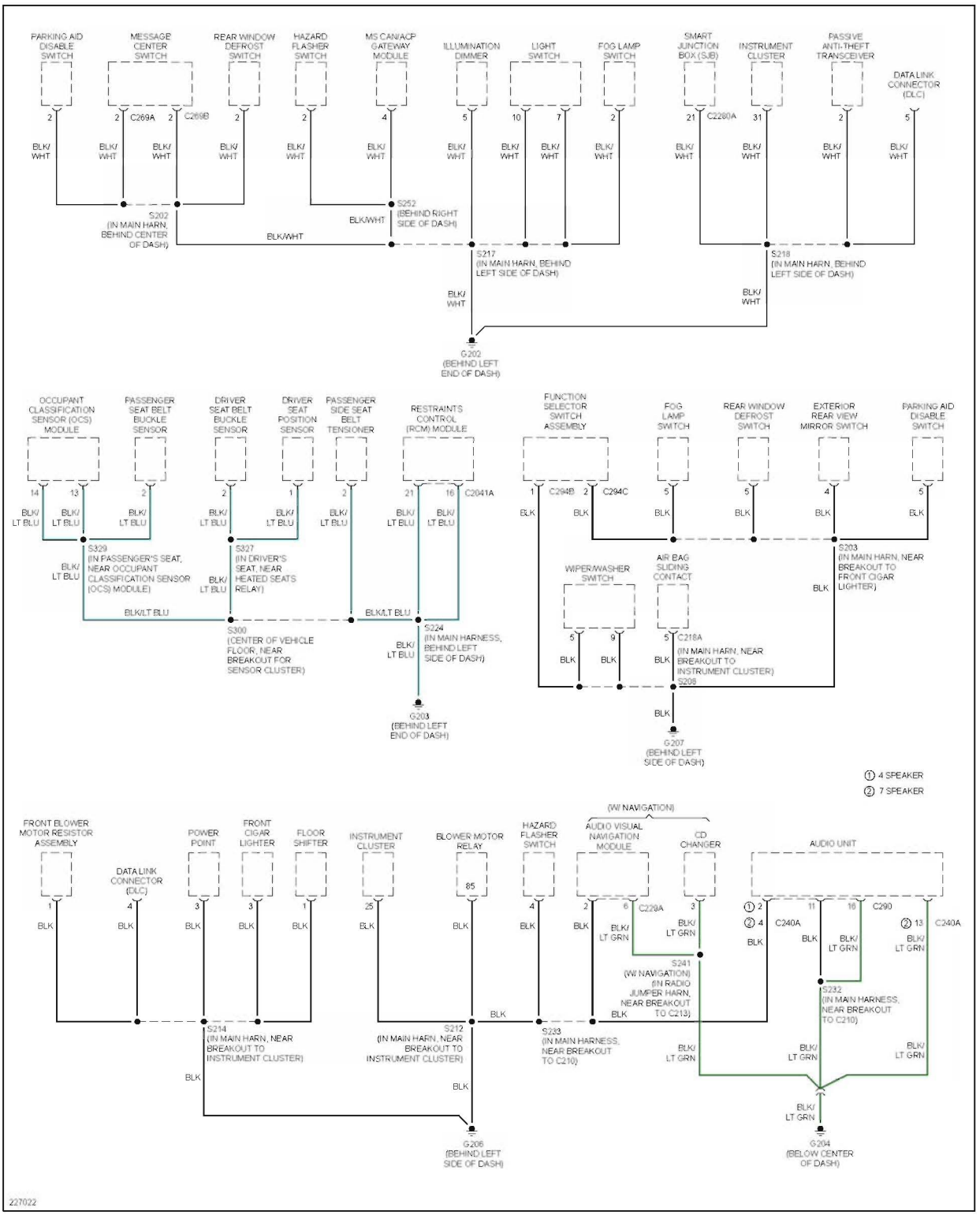

Fig. 60: Ground Distribution Circuit, Hybrid (3 of 4)

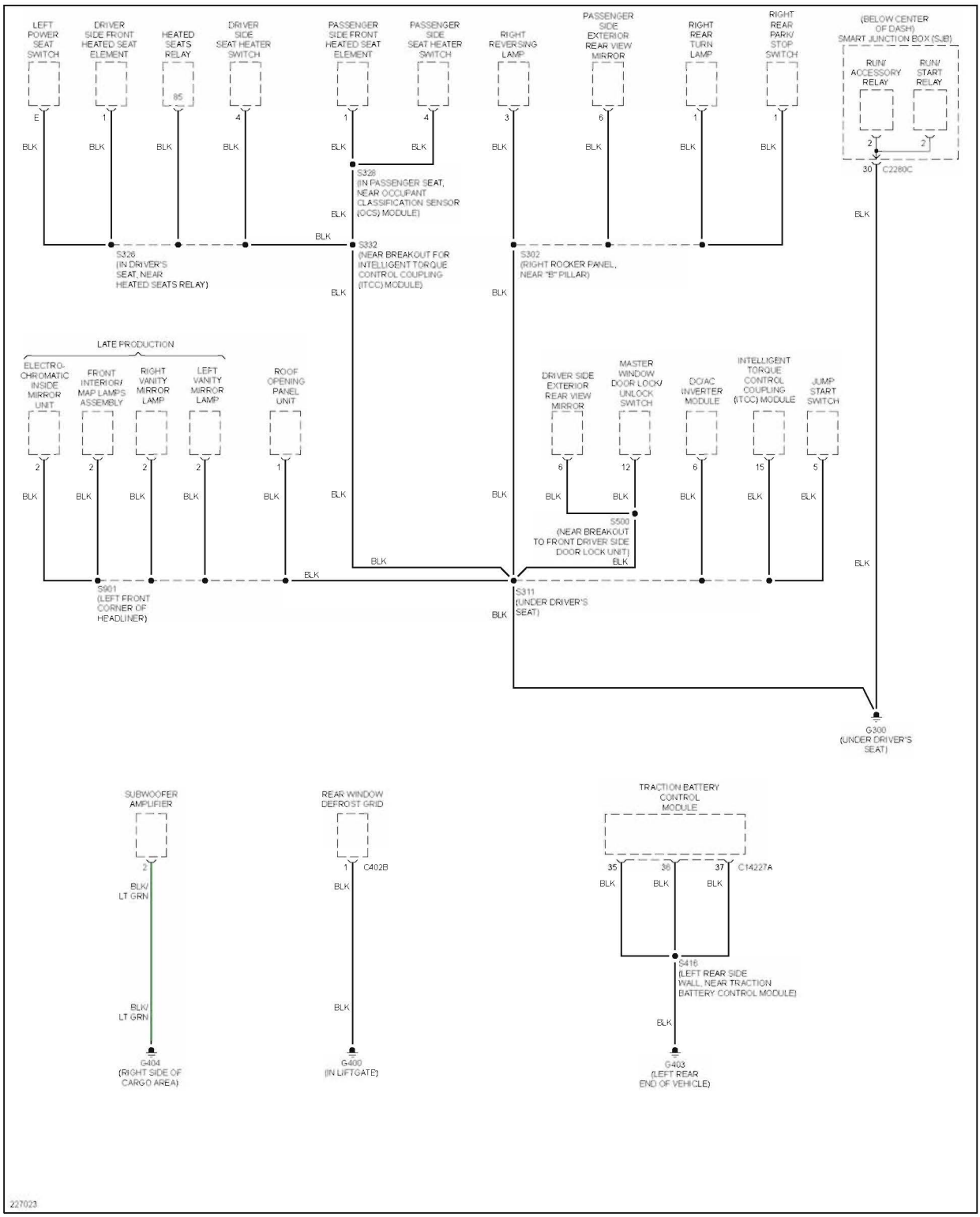

Fig. 61: Ground Distribution Circuit, Hybrid (4 of 4)

HEADLIGHTS

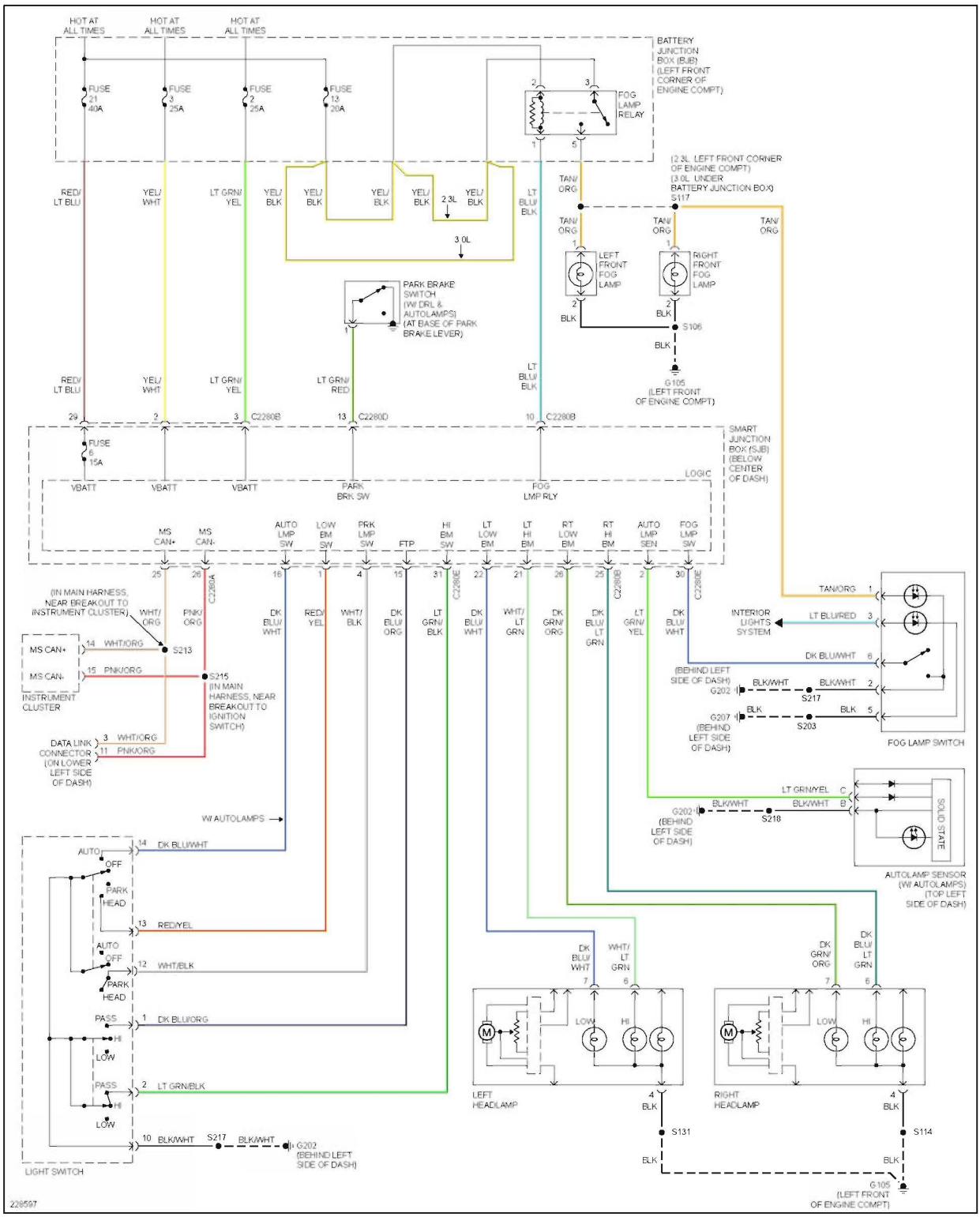

Fig. 62: Headlights Circuit, Except Hybrid

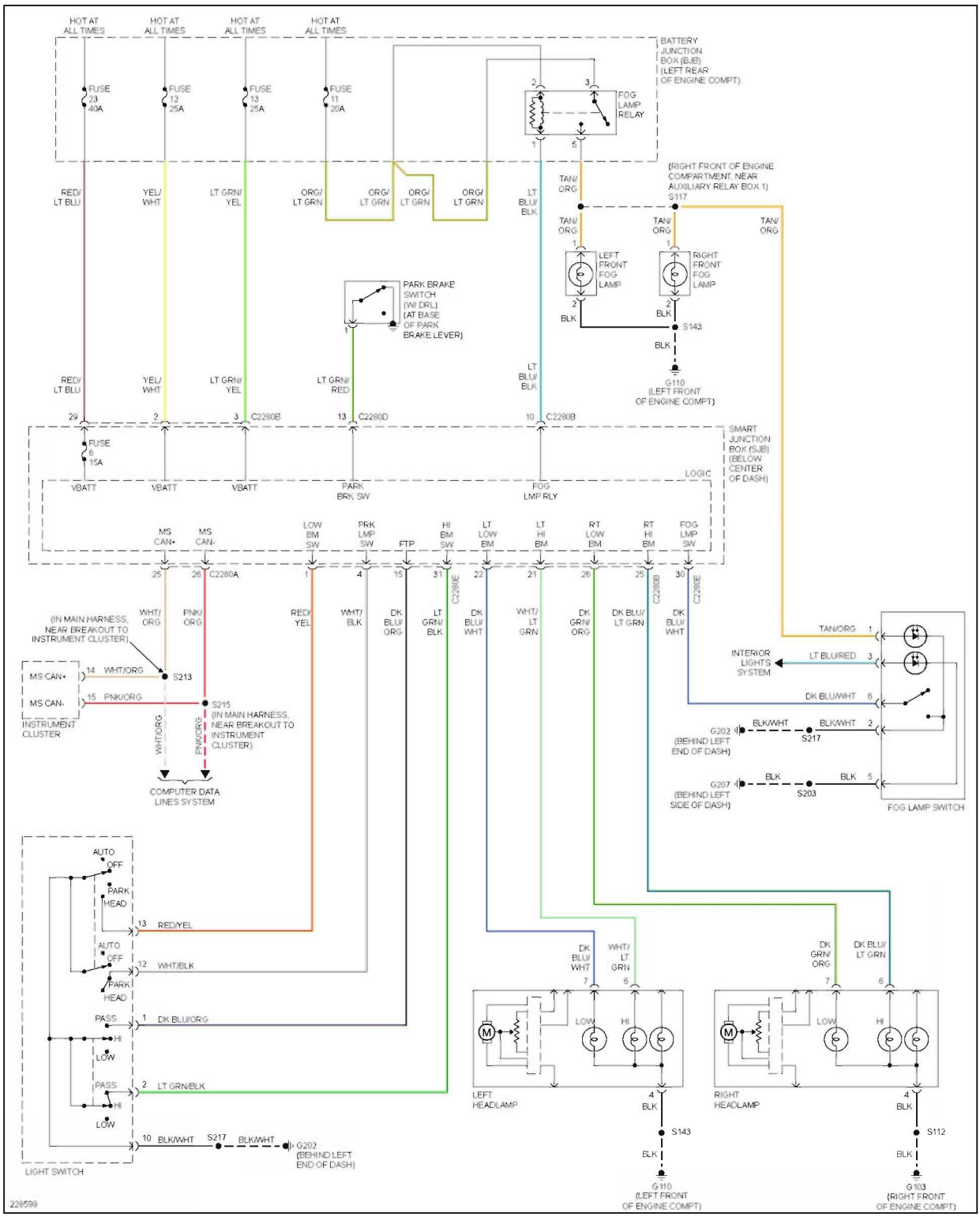

Fig. 63: Headlights Circuit, Hybrid

HORN

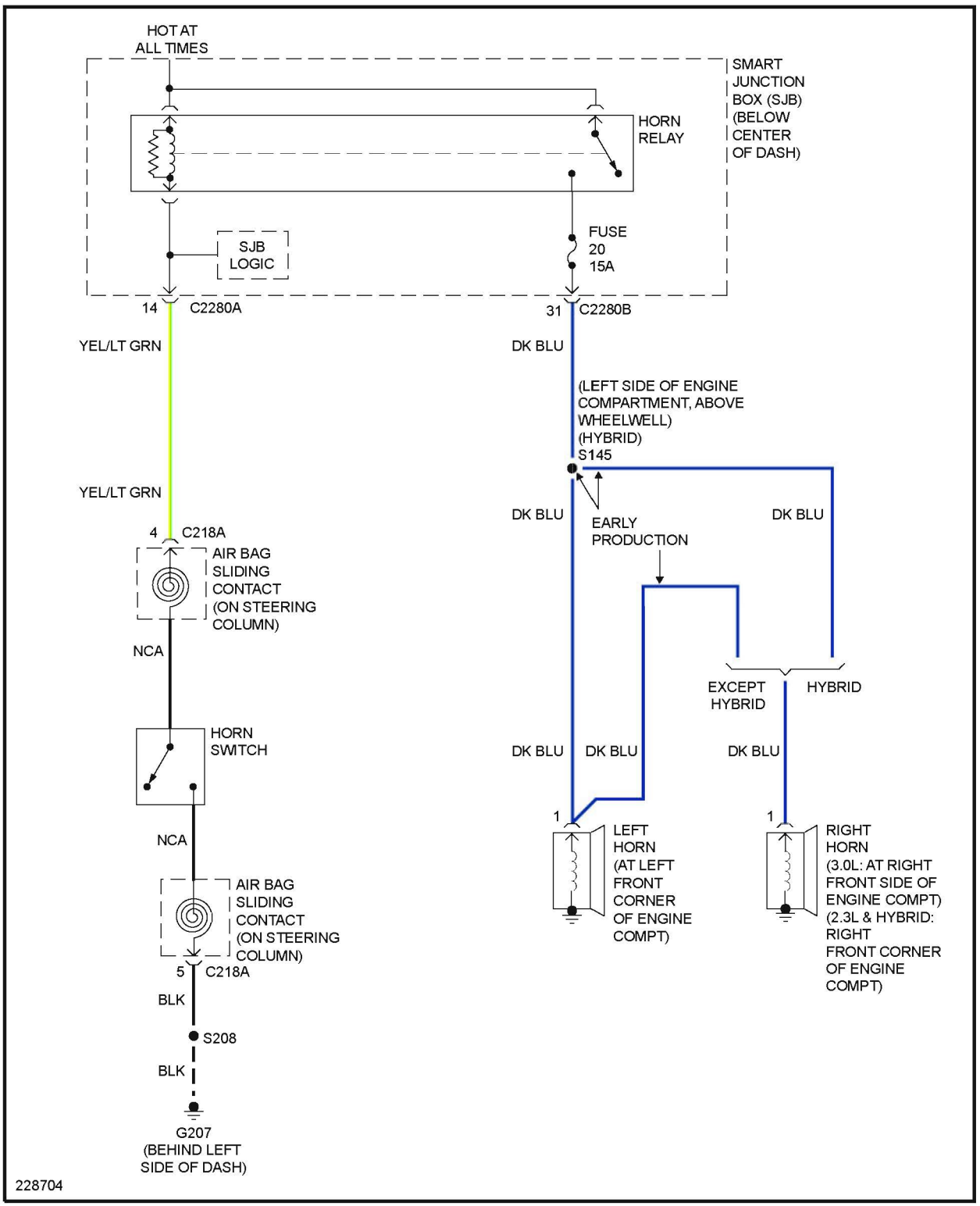

Fig. 64: Horn Circuit

INSTRUMENT CLUSTER

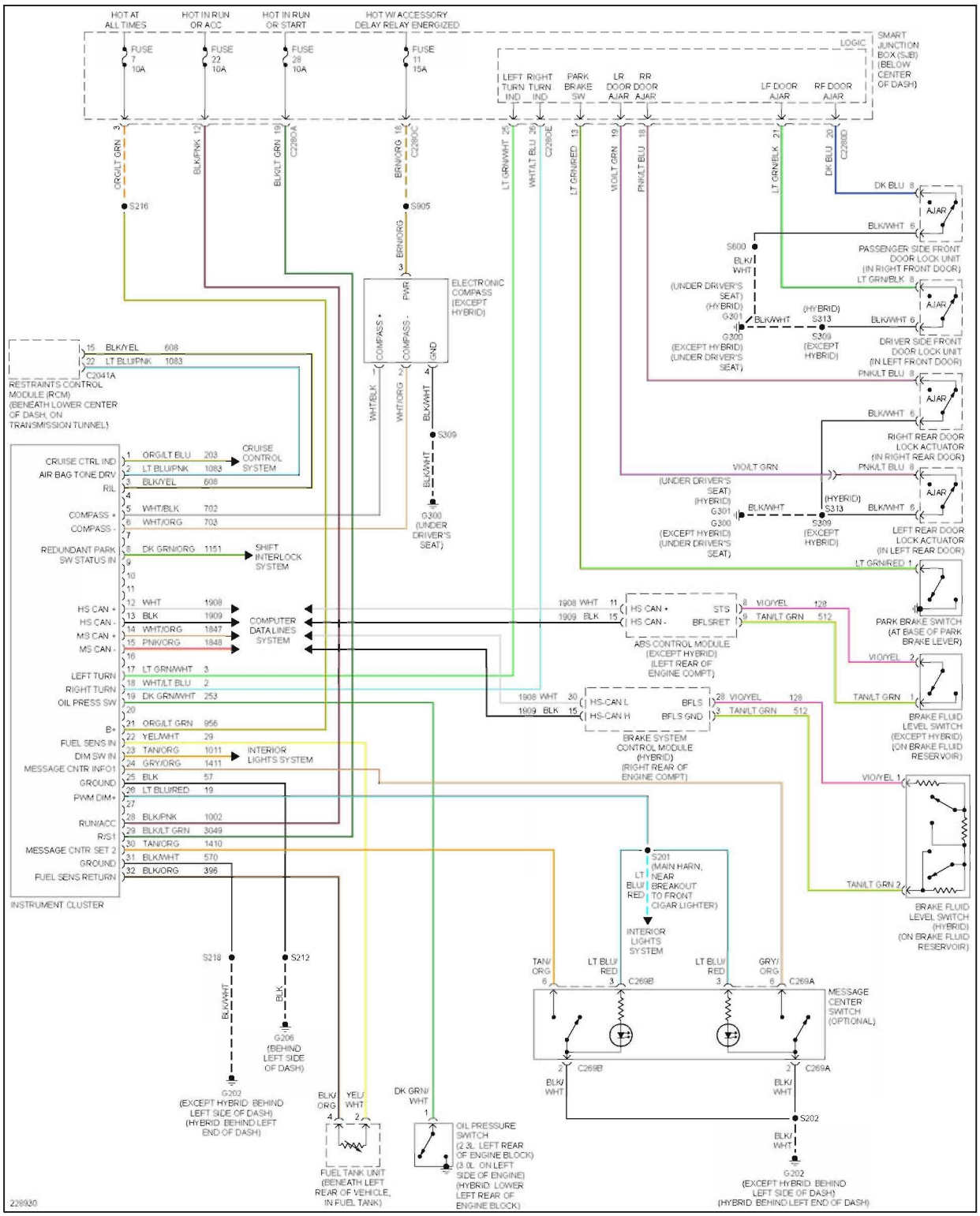

Fig. 65: Instrument Cluster Circuit

INTERIOR LIGHTS

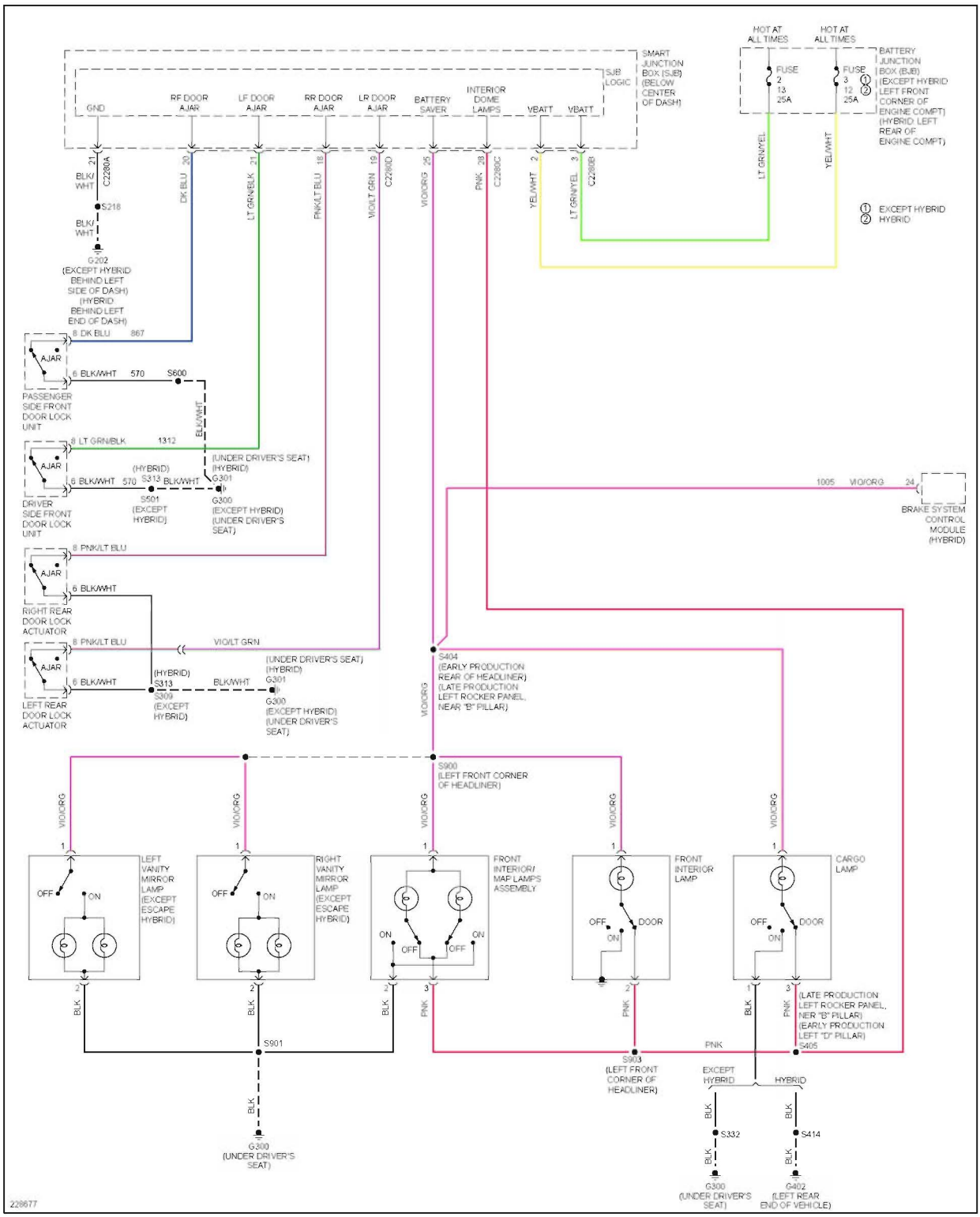

Fig. 66: Courtesy Lamps Circuit, W/ Roof Opening Panel

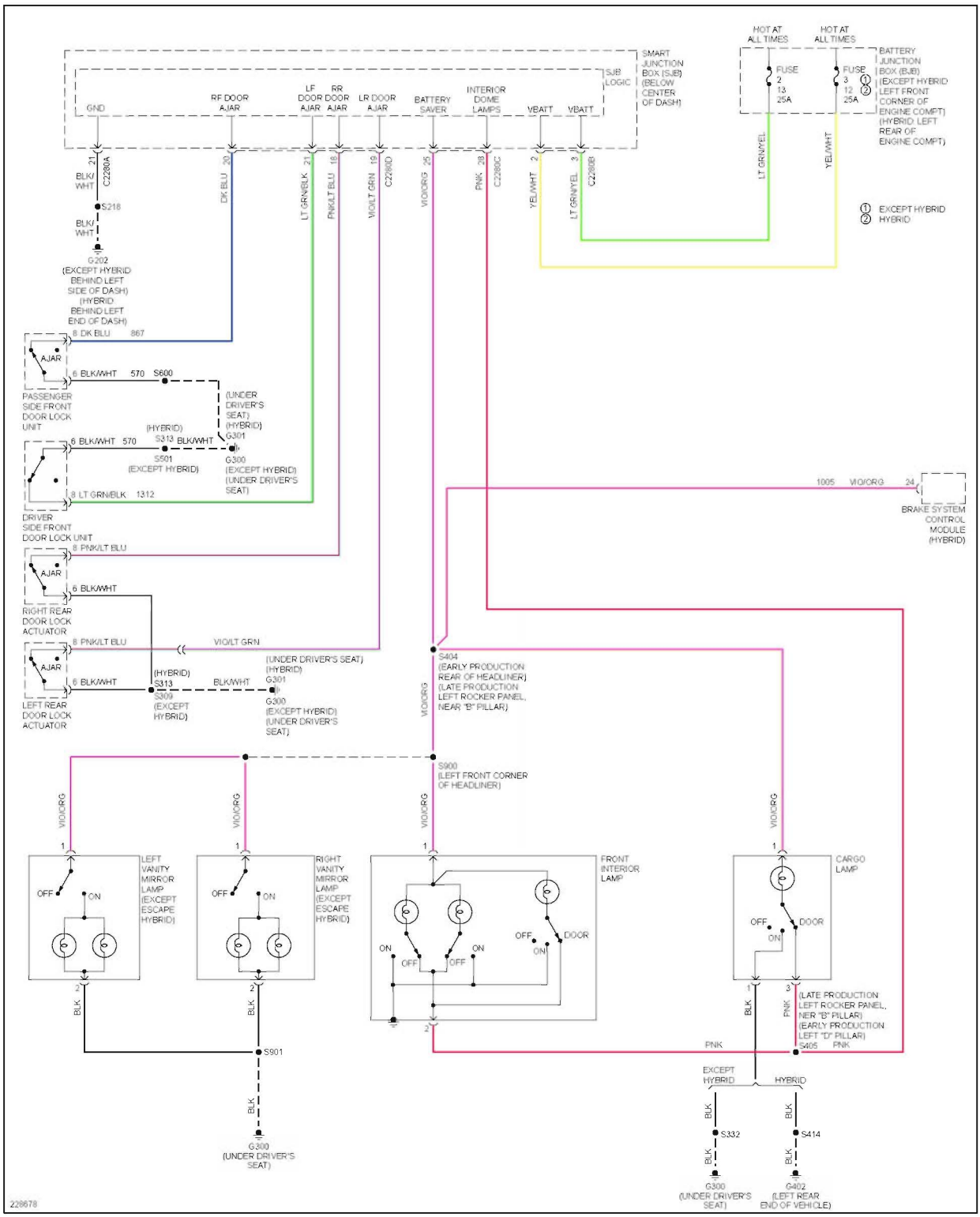

Fig. 67: Courtesy Lamps Circuit, W/O Roof Opening Panel

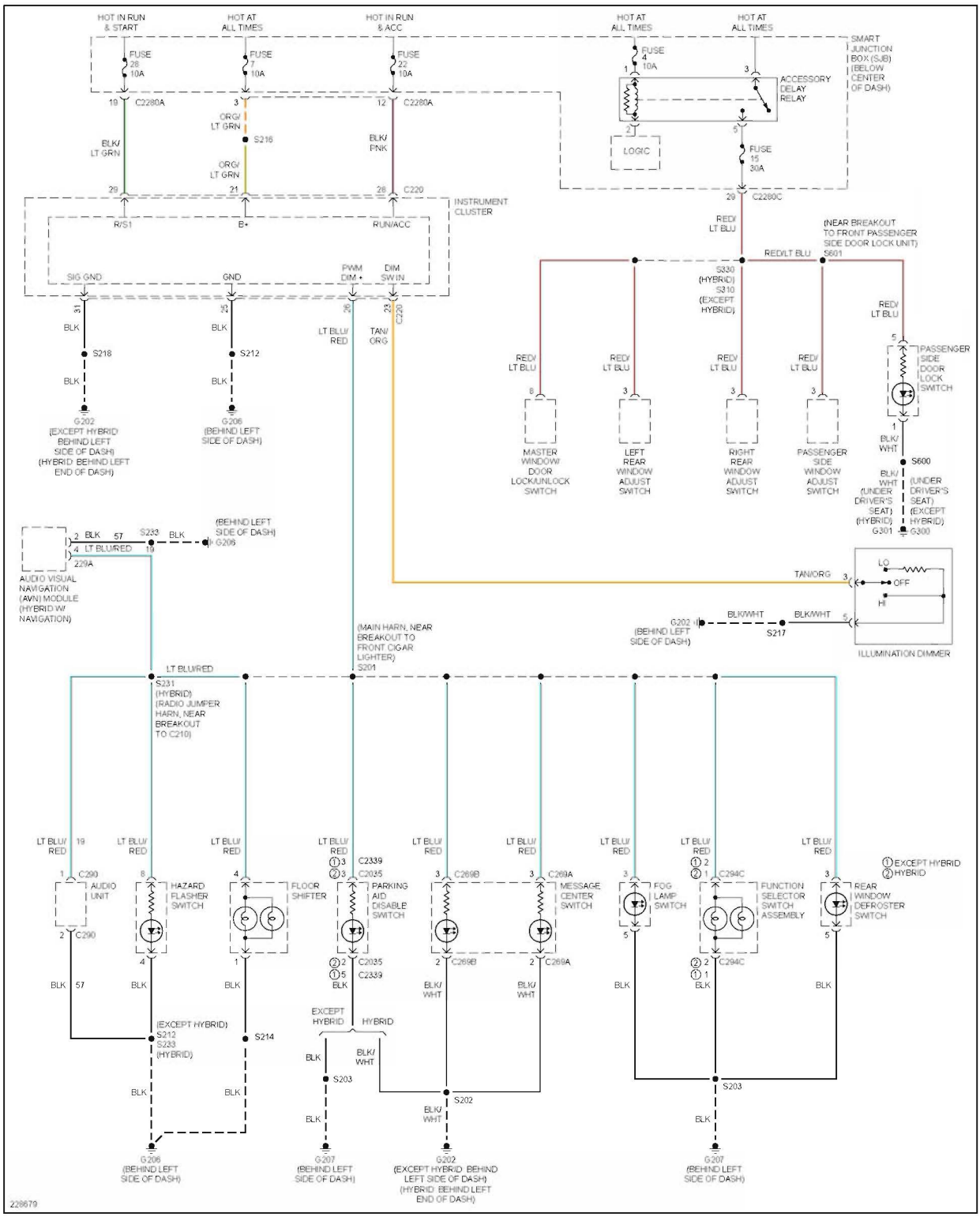

Fig. 68: Instrument Illumination Circuit

NAVIGATION

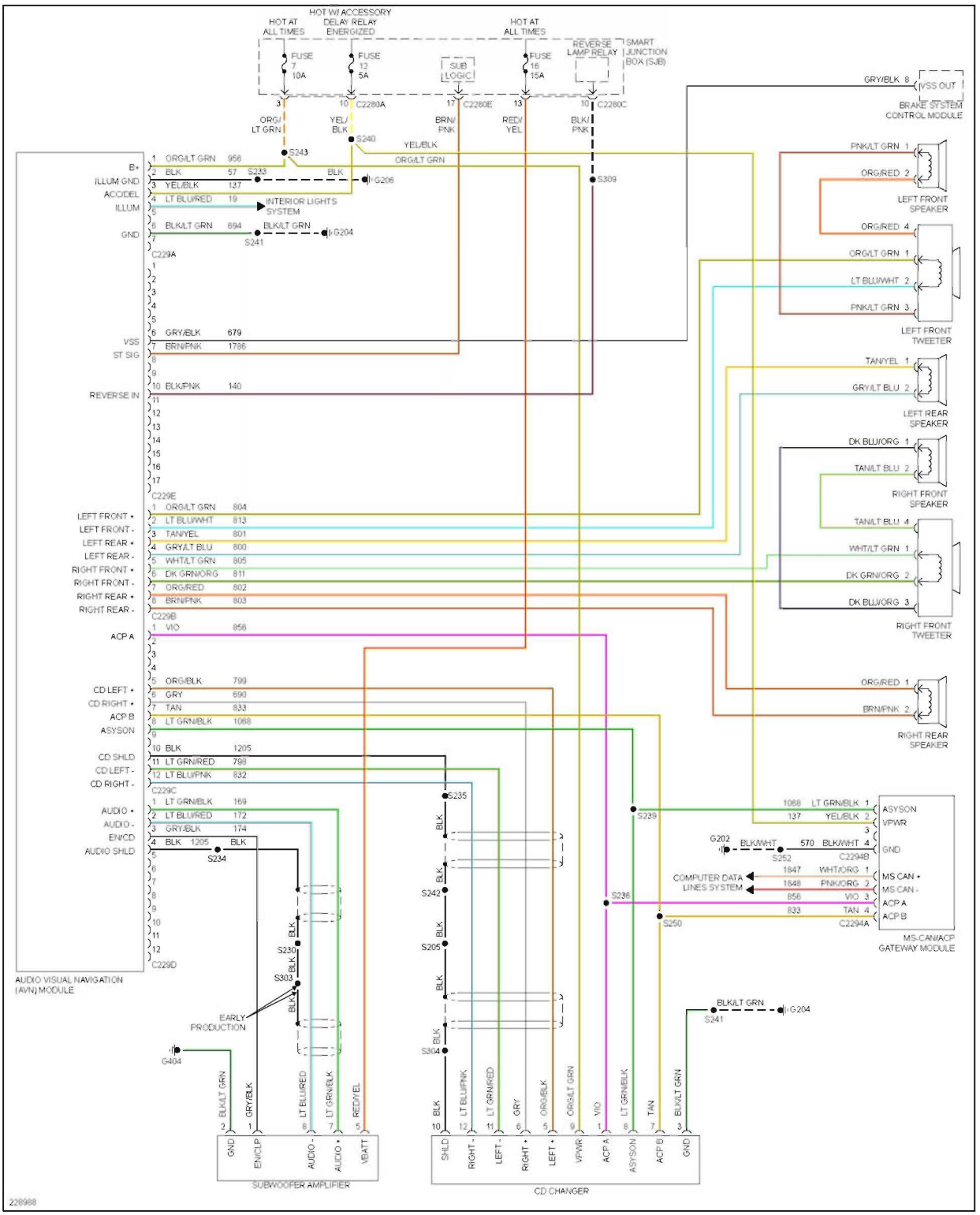

Fig. 69: Navigation Circuit

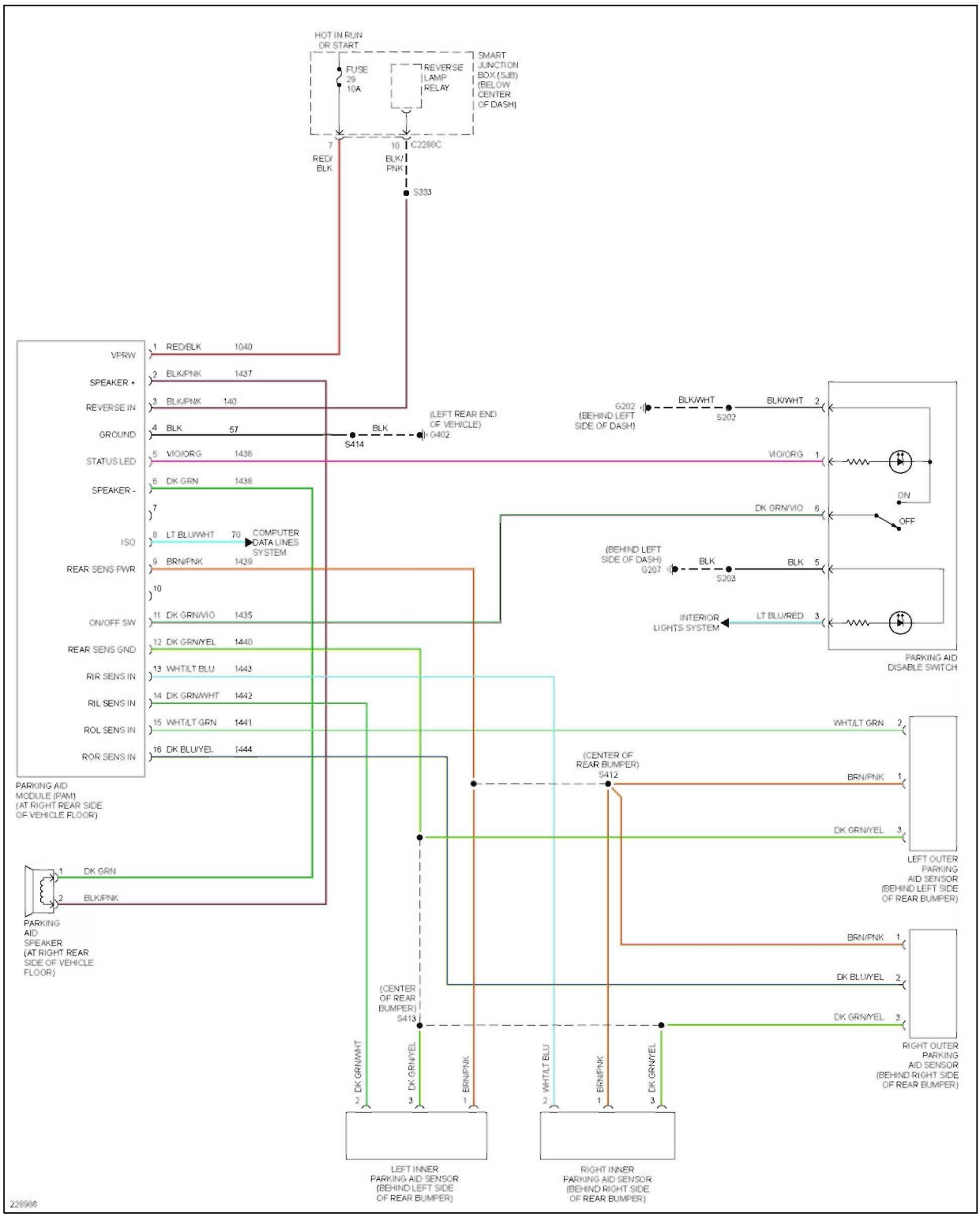

Fig. 70: Parking Assistant Circuit, Except Hybrid

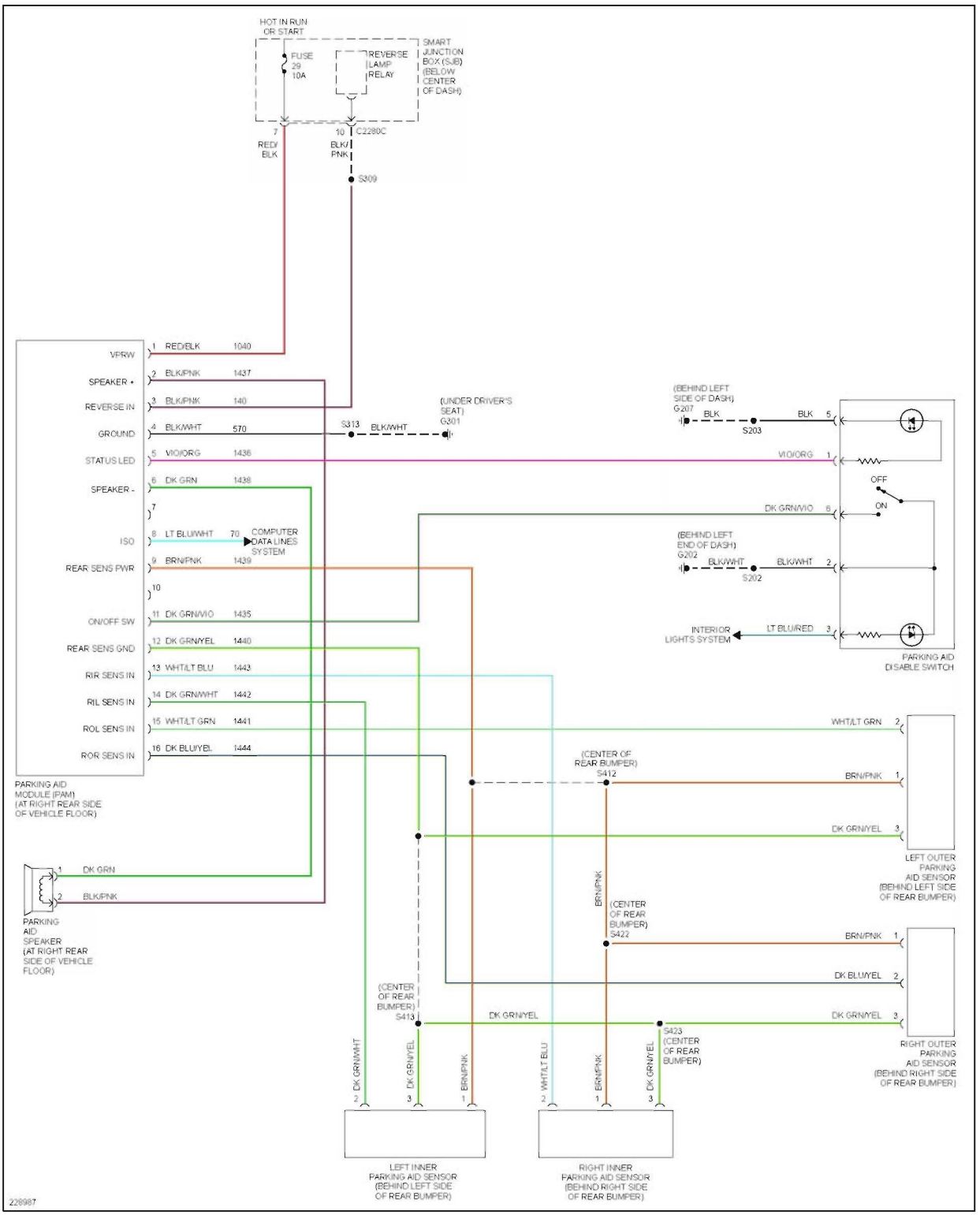

Fig. 71: Parking Assistant Circuit, Hybrid

POWER DISTRIBUTION

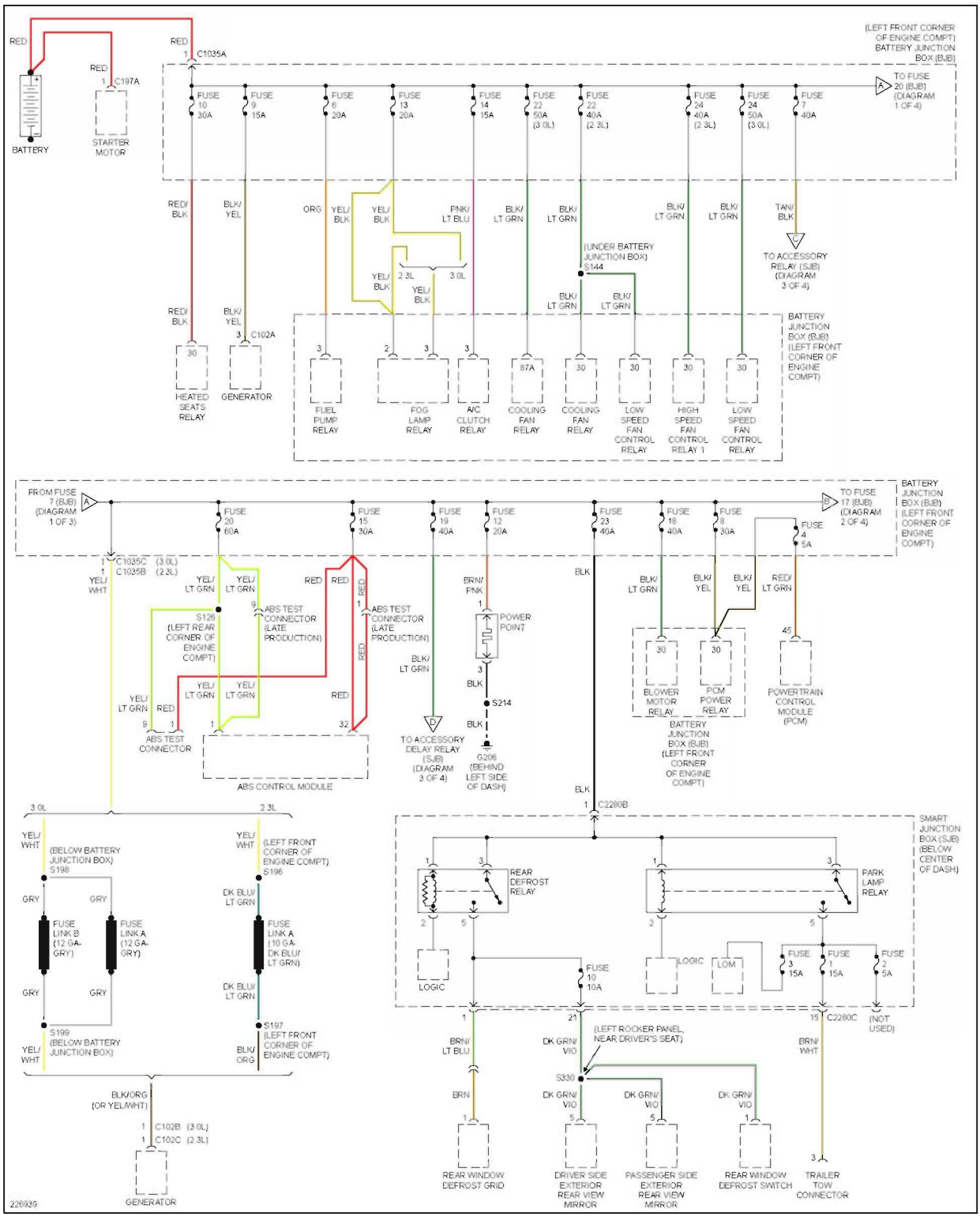

Fig. 72: Power Distribution Circuit, Except Hybrid (1 of 4)

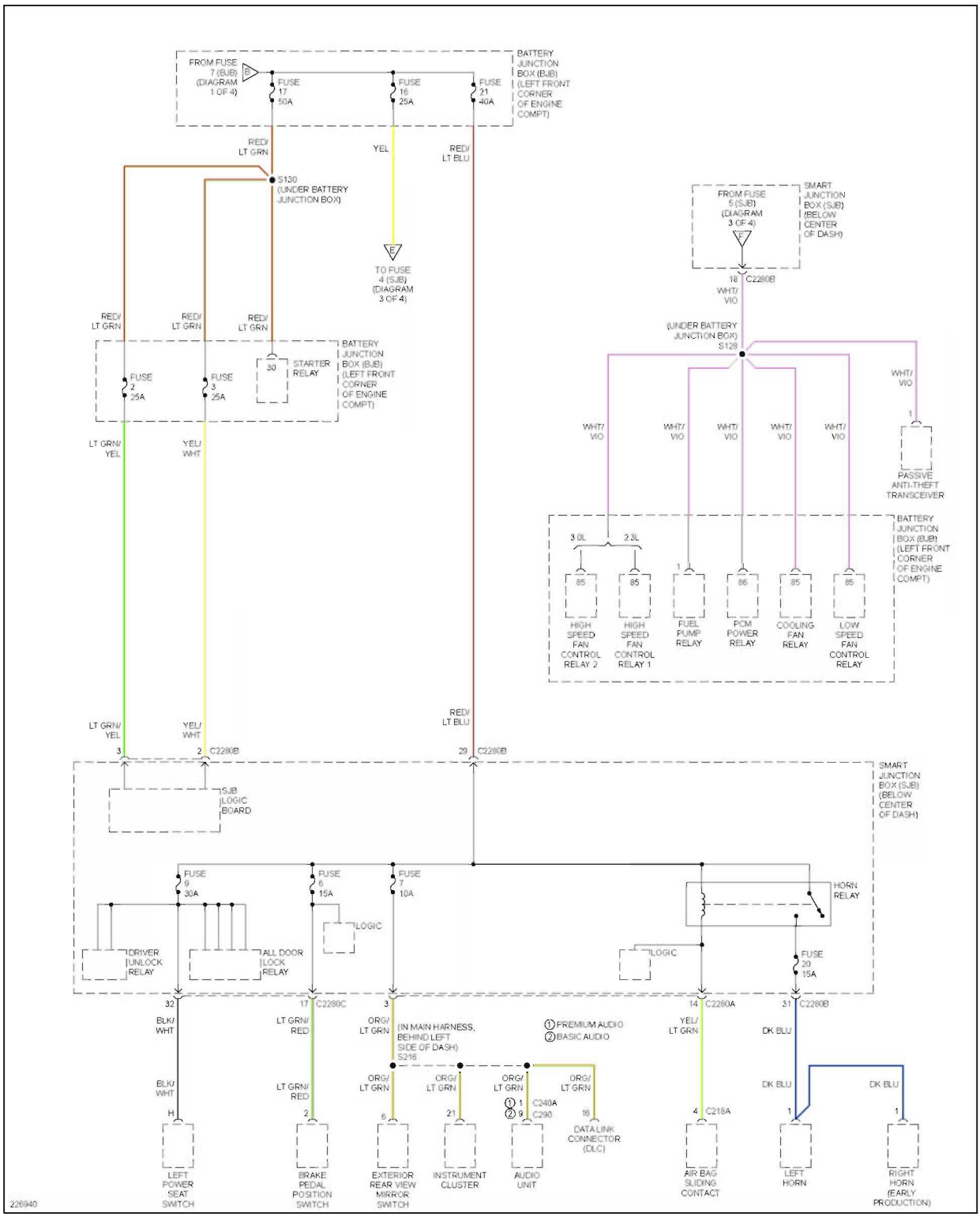

Fig. 73: Power Distribution Circuit, Except Hybrid (2 of 4)

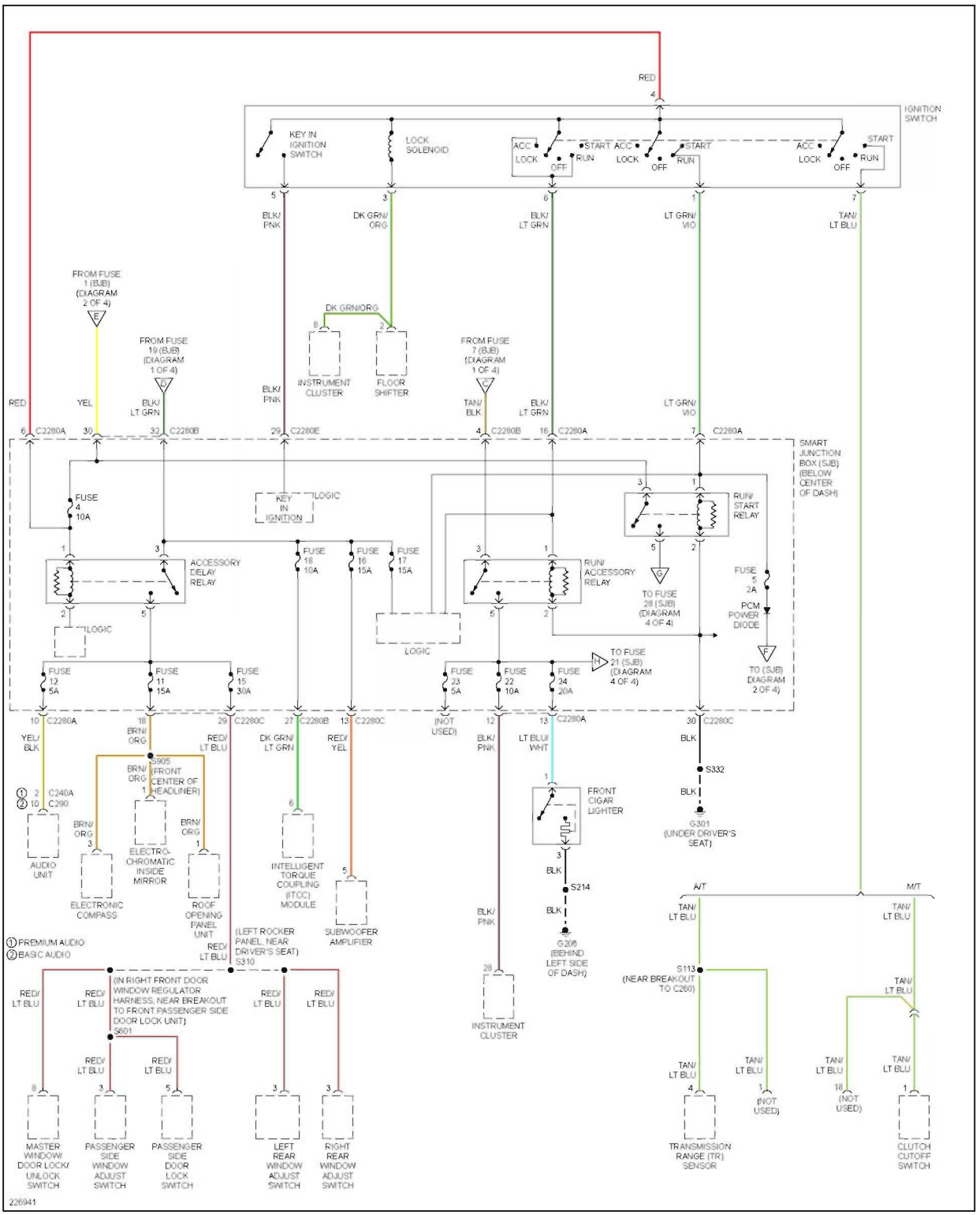

Fig. 74: Power Distribution Circuit, Except Hybrid (3 of 4)

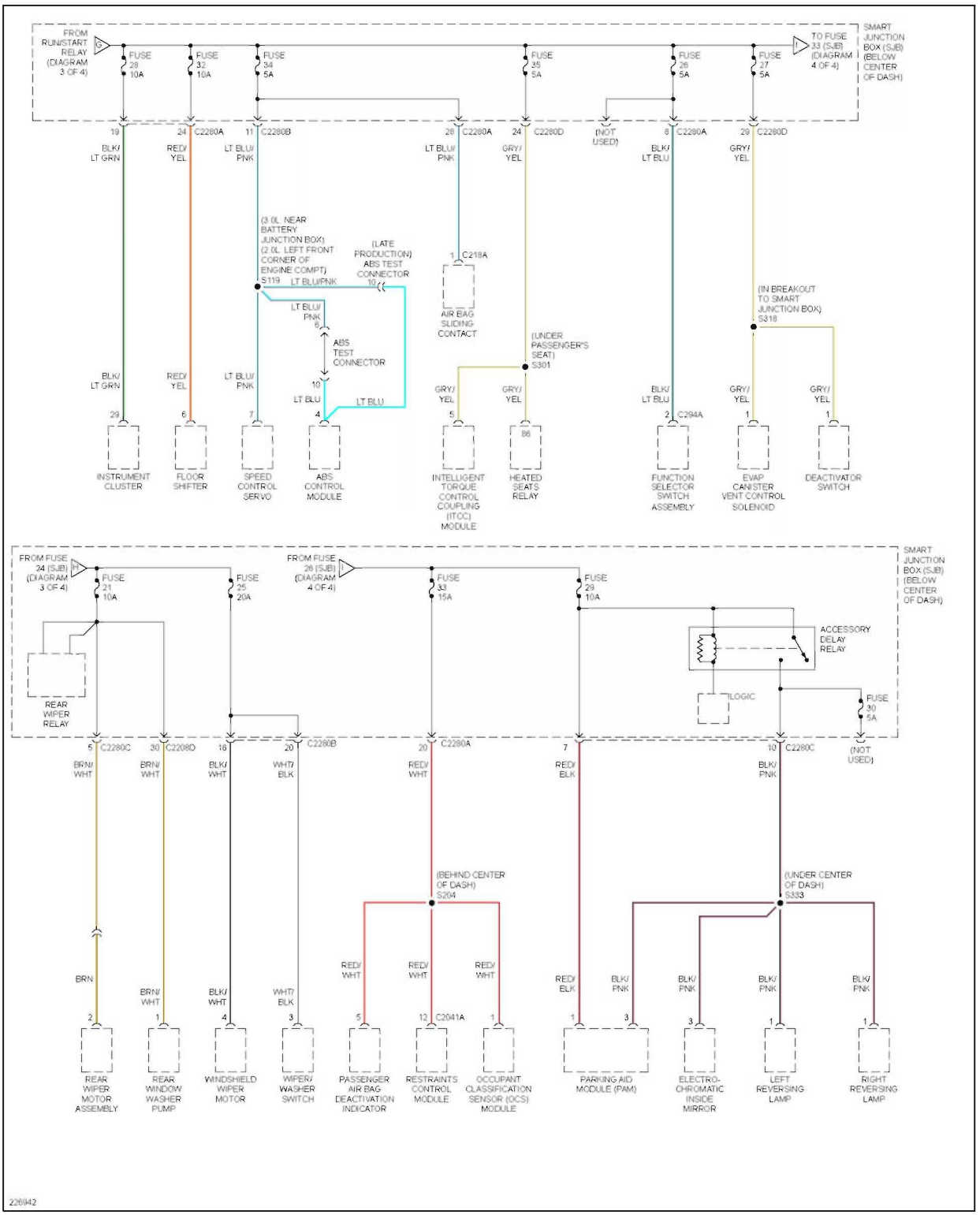

Fig. 75: Power Distribution Circuit, Except Hybrid (4 of 4)

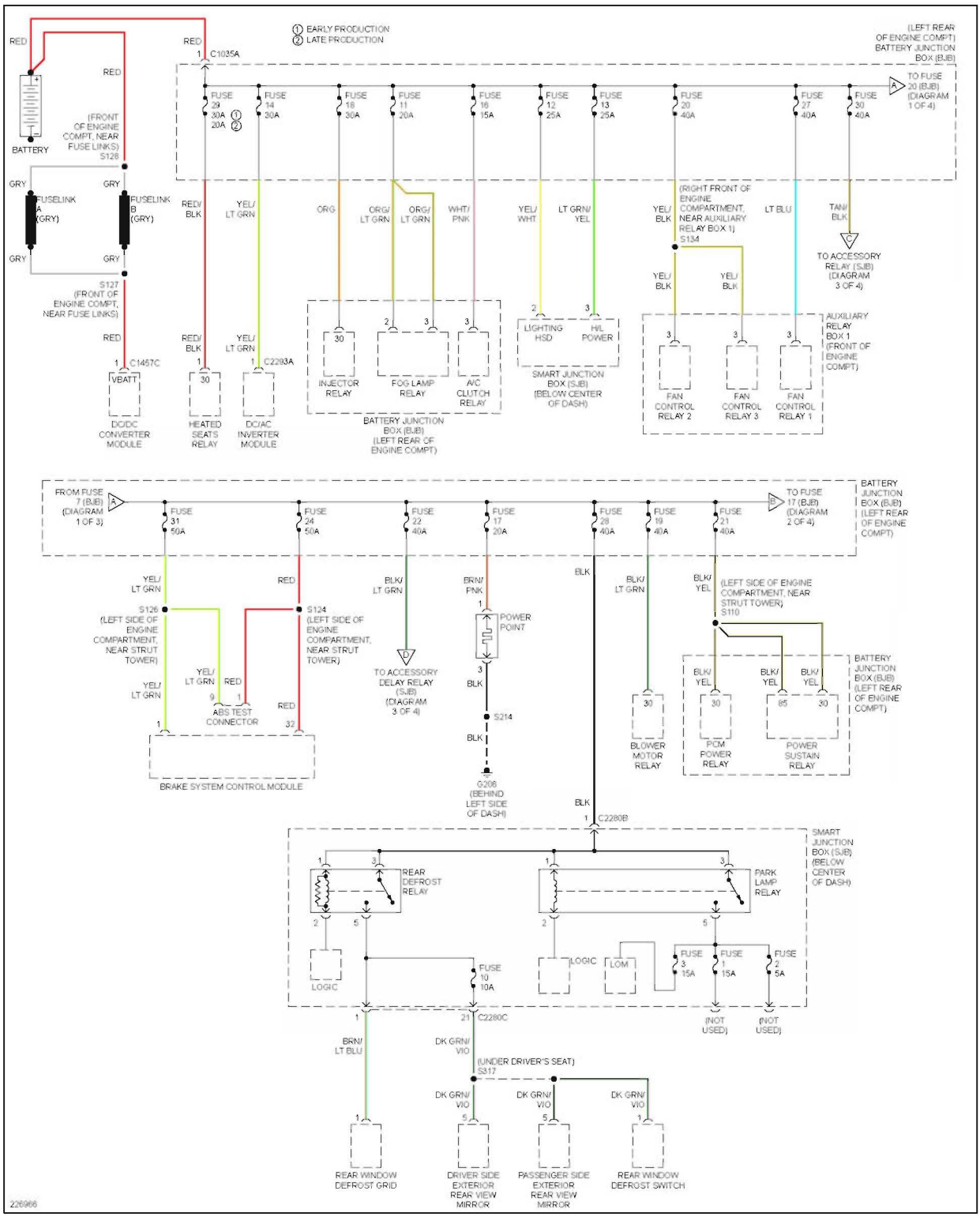

Fig. 76: Power Distribution Circuit, Hybrid (1 of 4)

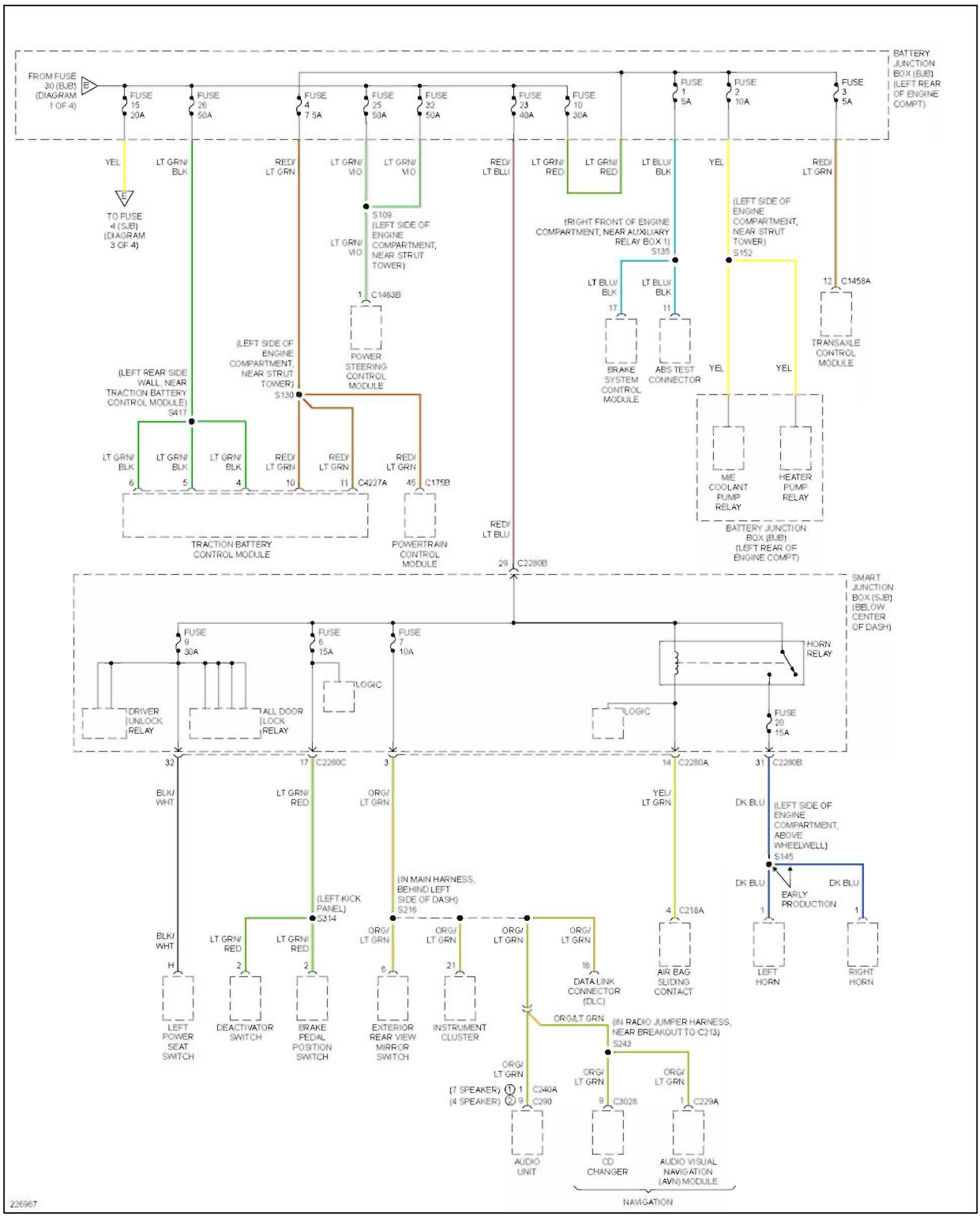

Fig. 77: Power Distribution Circuit, Hybrid (2 of 4)

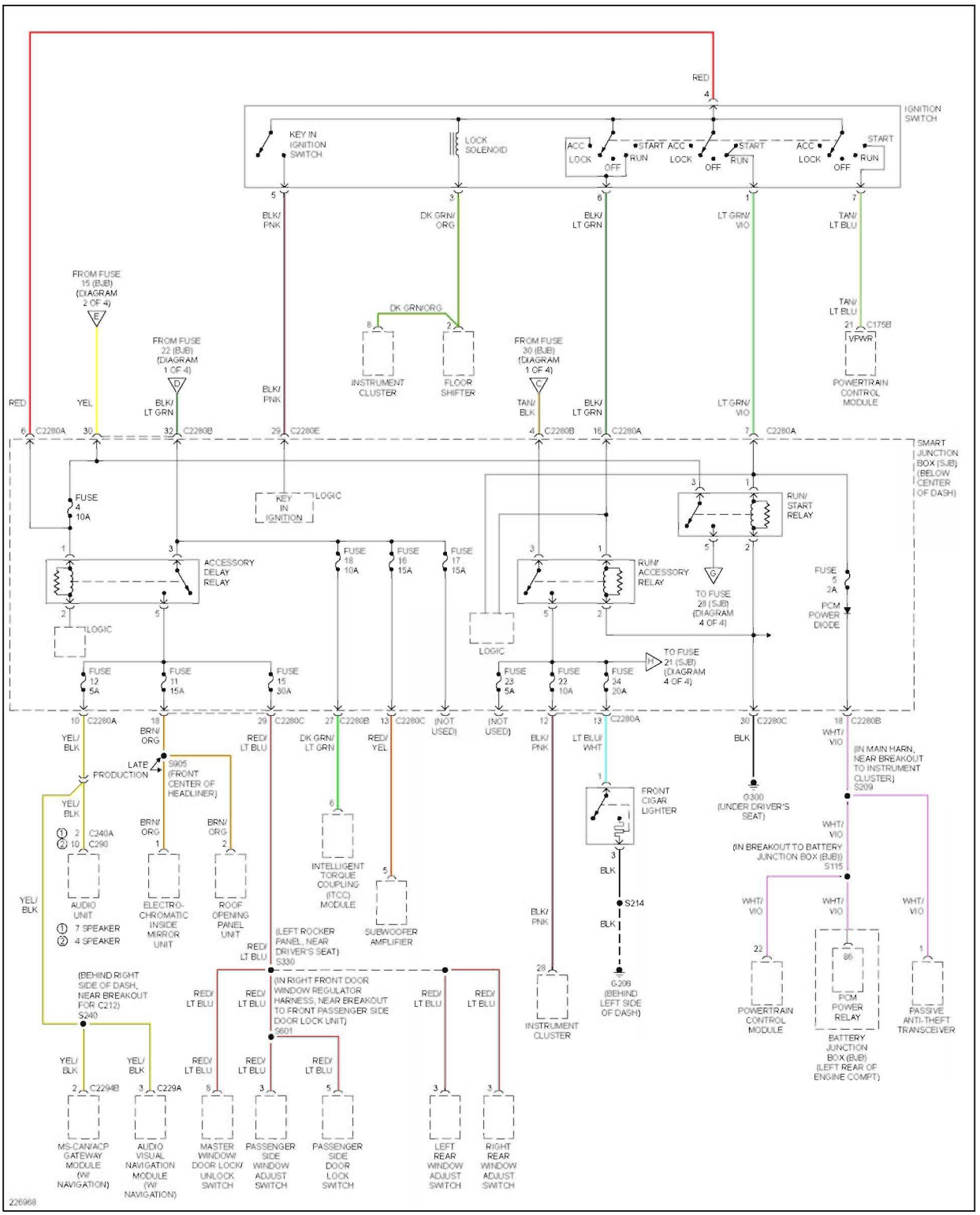

Fig. 78: Power Distribution Circuit, Hybrid (3 of 4)

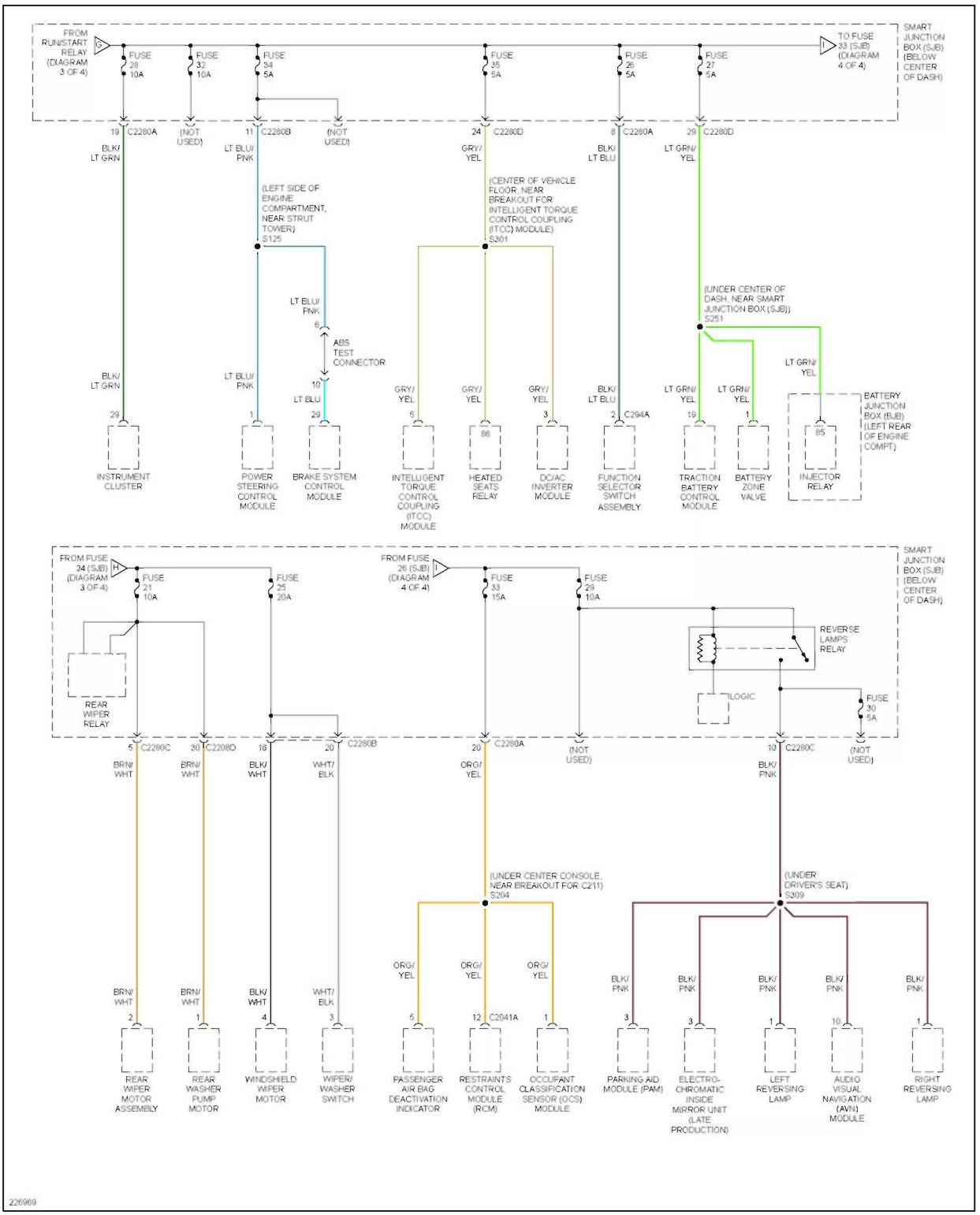

Fig. 79: Power Distribution Circuit, Hybrid (4 of 4)

POWER MIRRORS

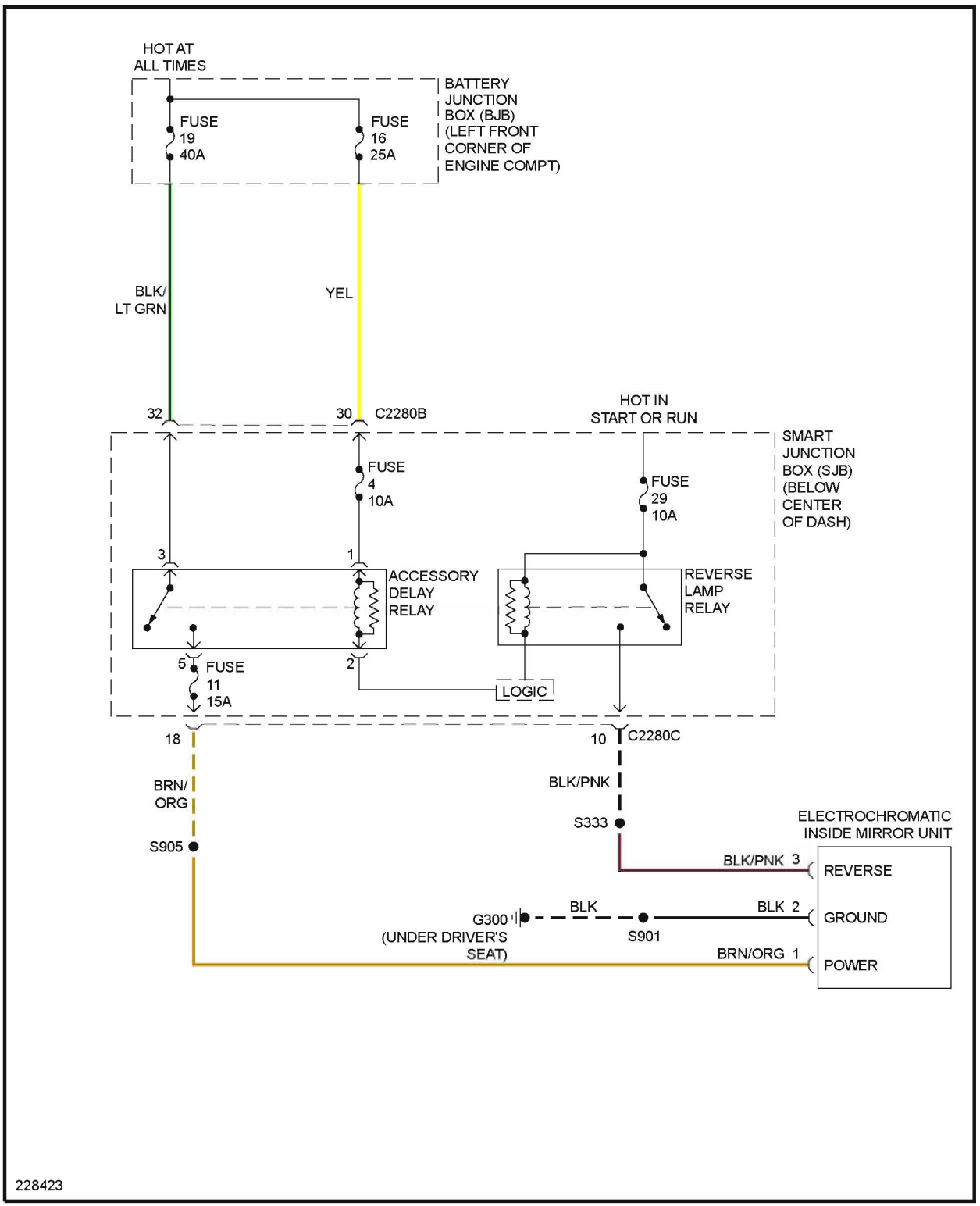

Fig. 80: Electrochromic Mirror Circuit, Except Hybrid

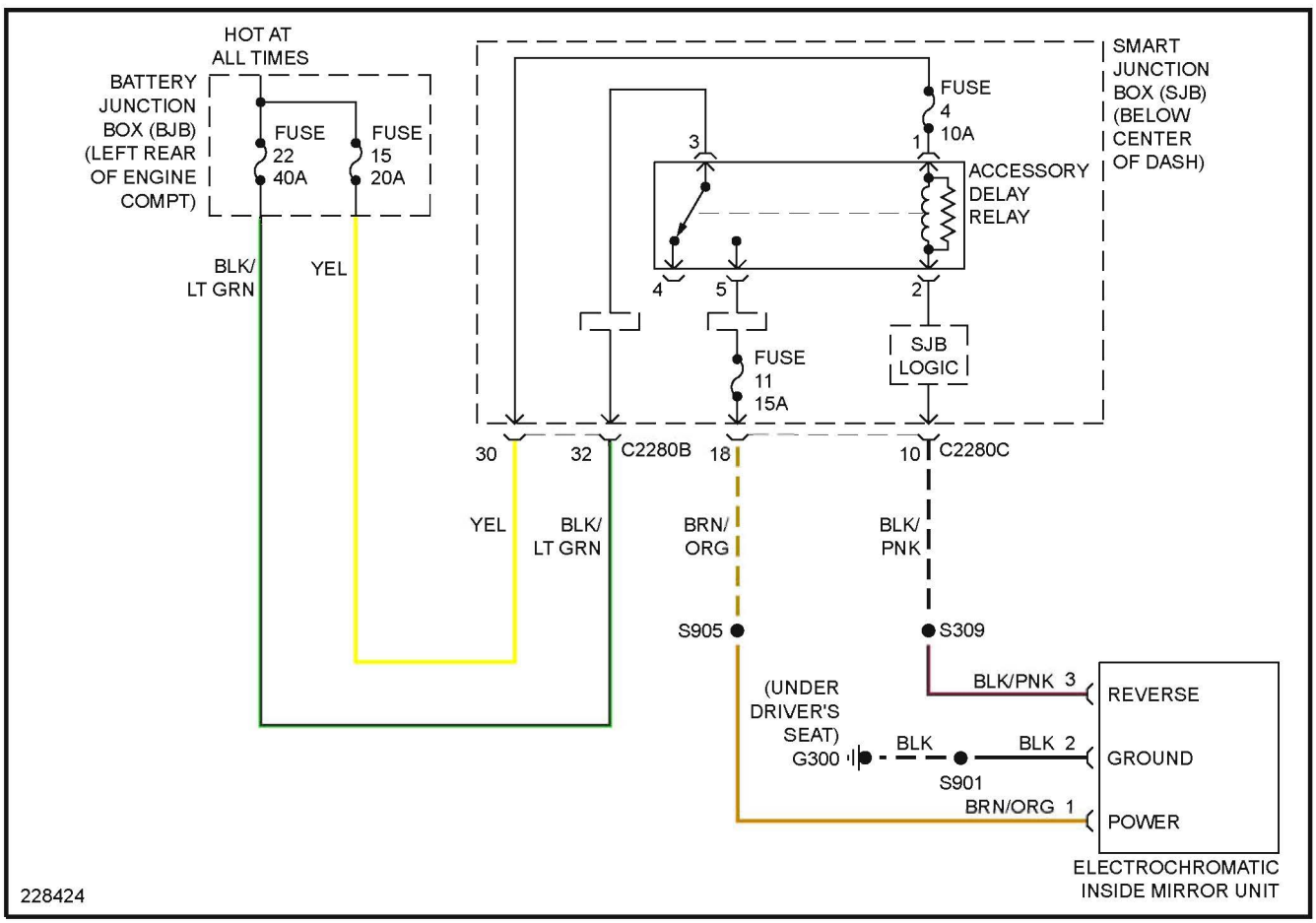

Fig. 81: Electrochromic Mirror Circuit, Hybrid

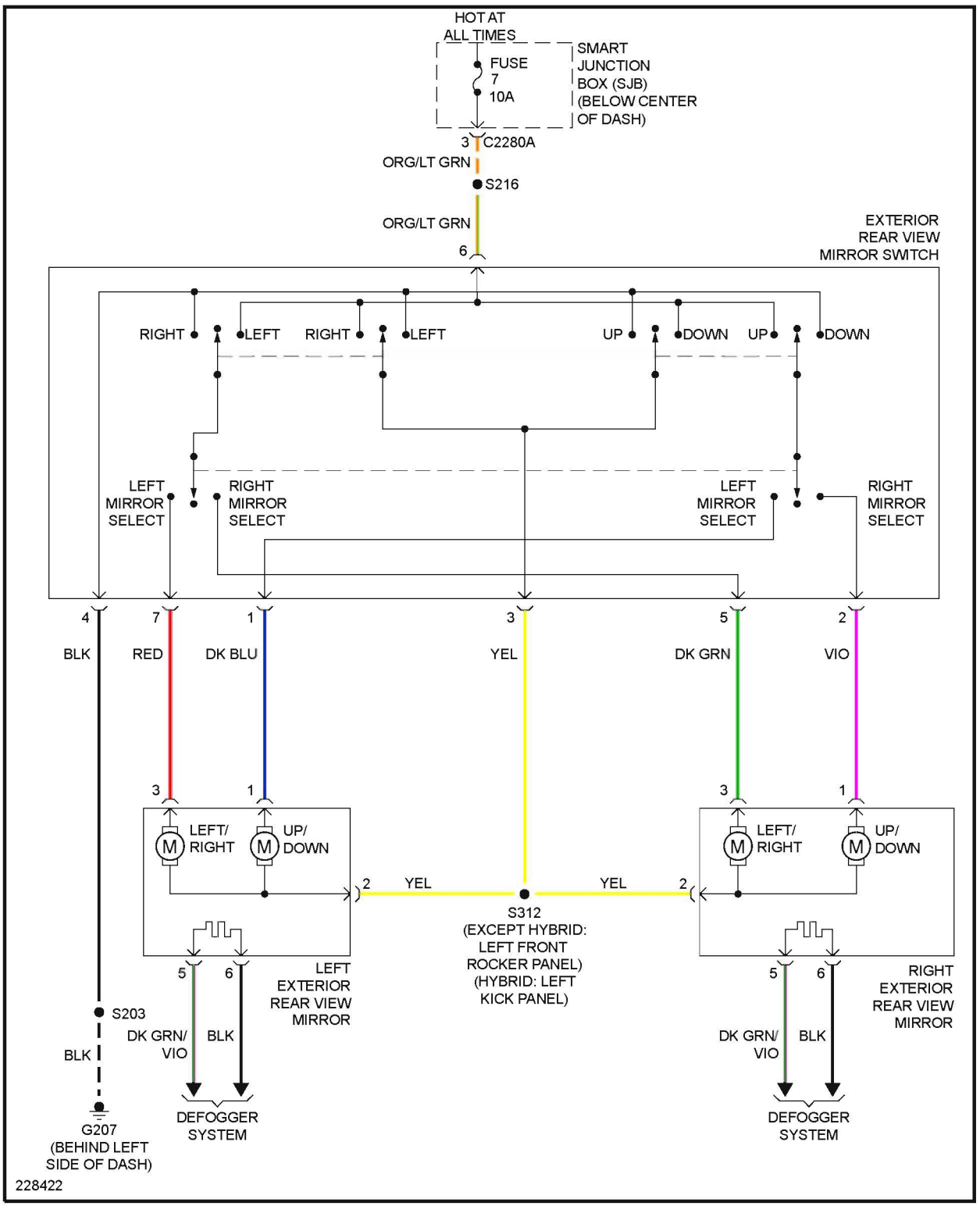

Fig. 82: Power Mirrors Circuit

POWER SEATS

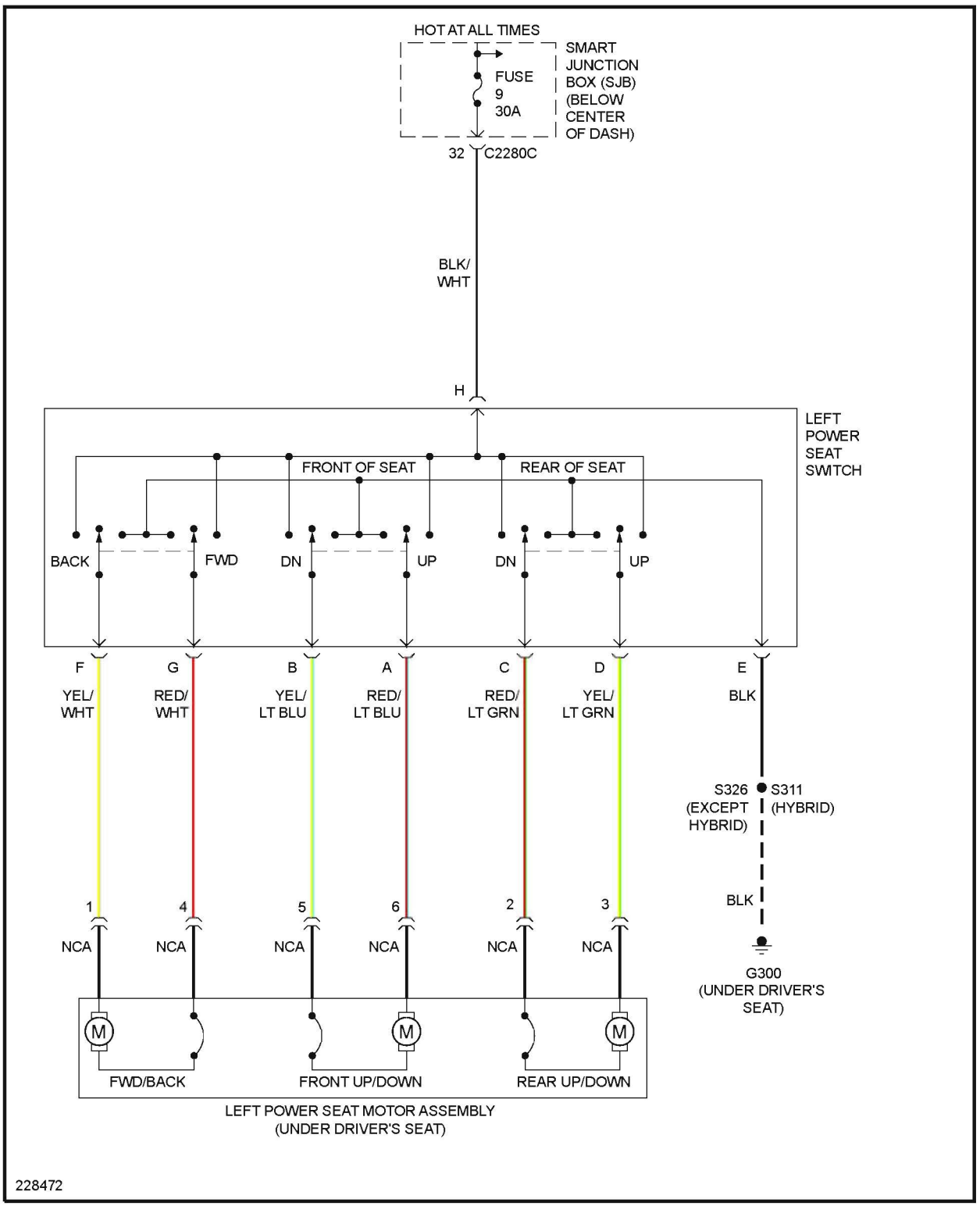

Fig. 83: Driver Power Seat Circuit

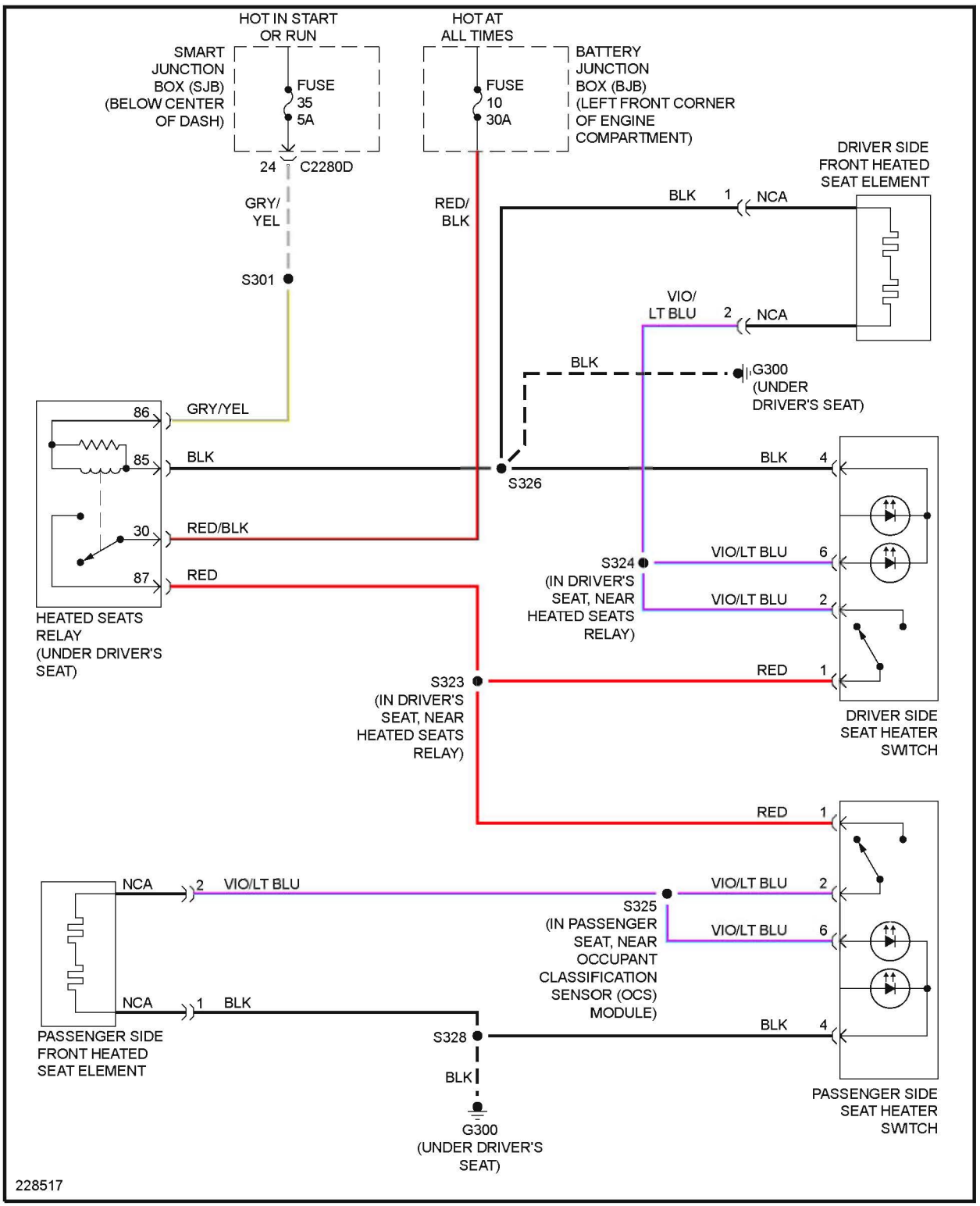

Fig. 84: Heated Seats Circuit, Early Production Except Hybrid

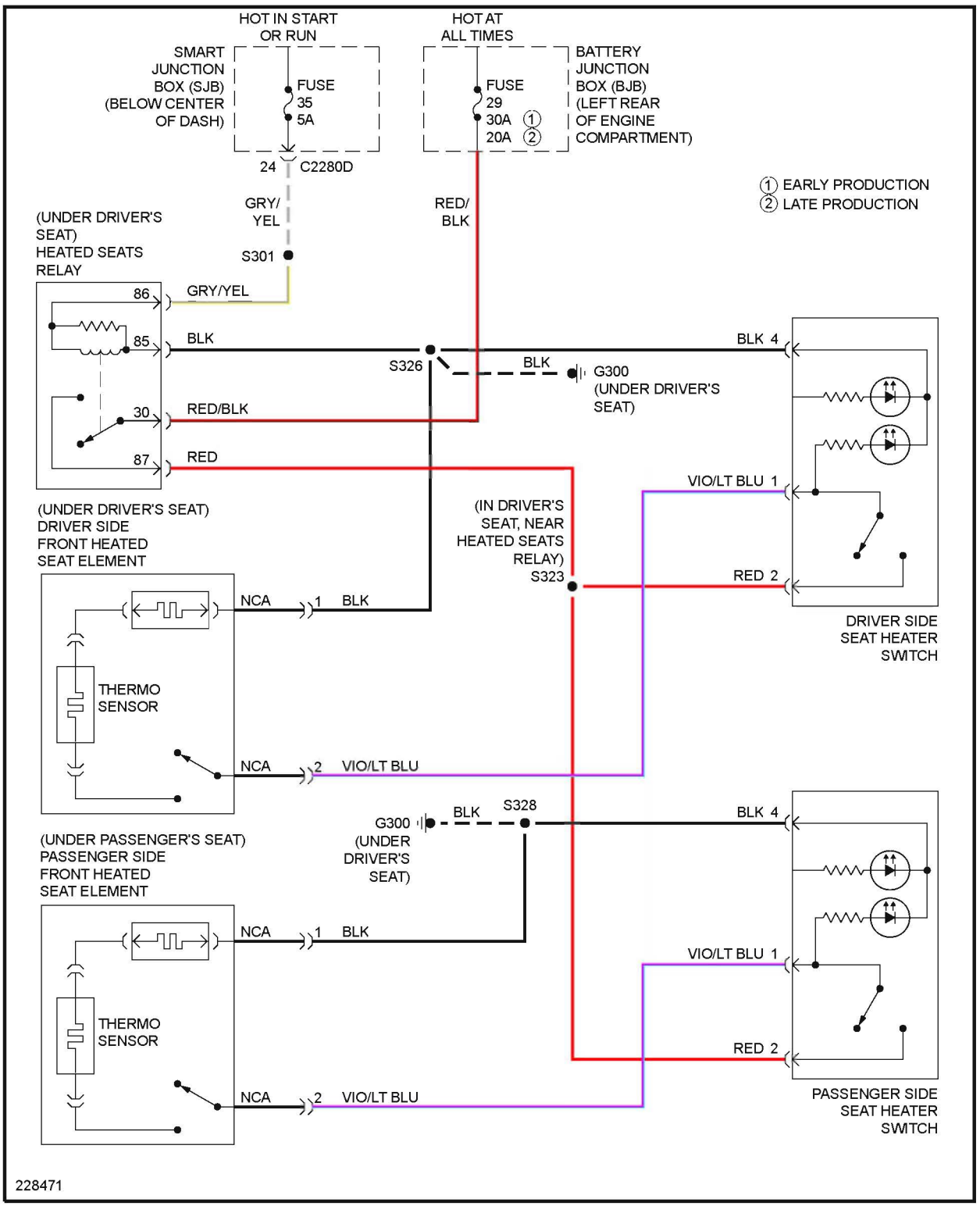

Fig. 85: Heated Seats Circuit, Hybrid

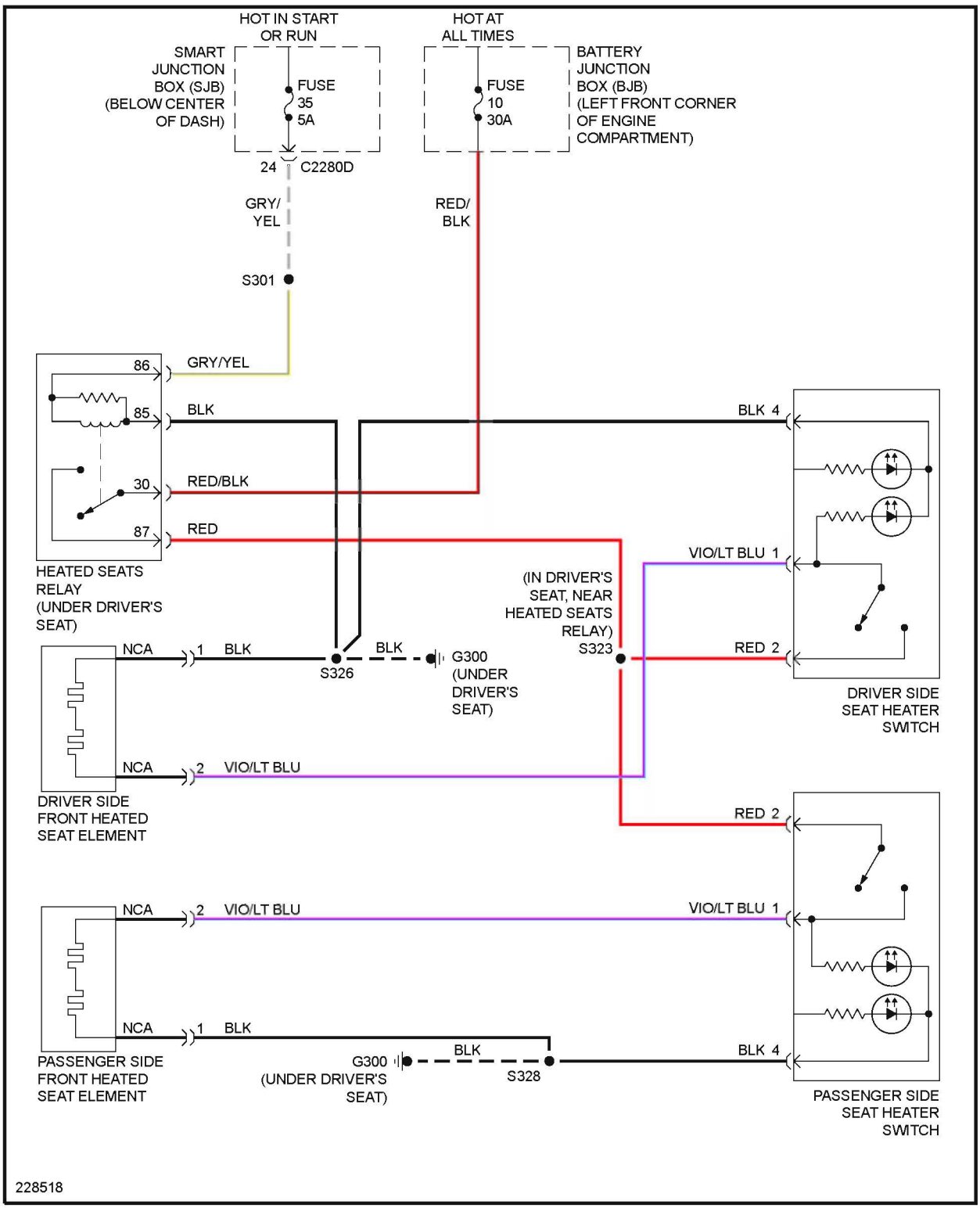

Fig. 86: Heated Seats Circuit, Late Production Except Hybrid

POWER TOP/SUNROOF

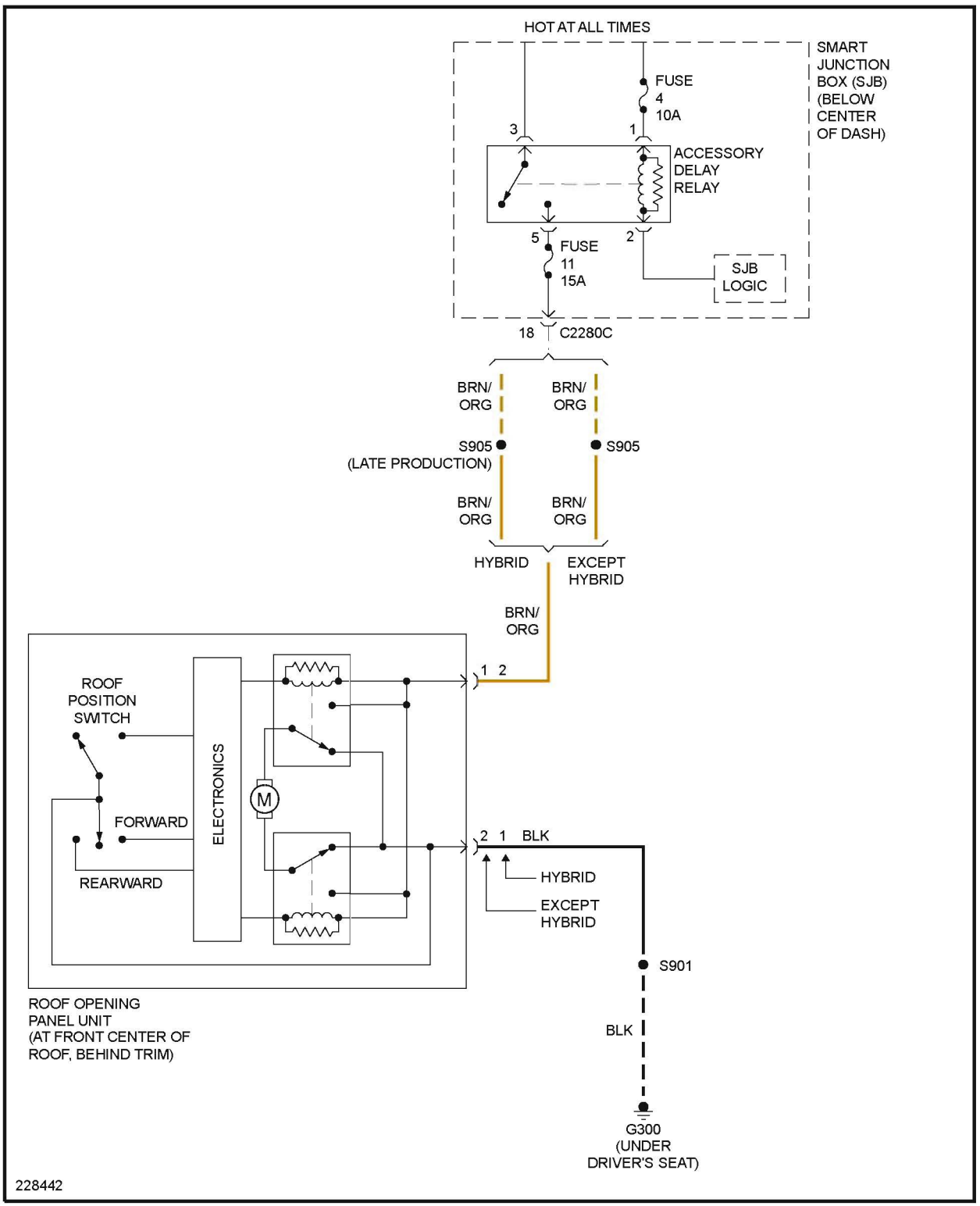

Fig. 87: Power Top/Sunroof Circuit

POWER WINDOWS

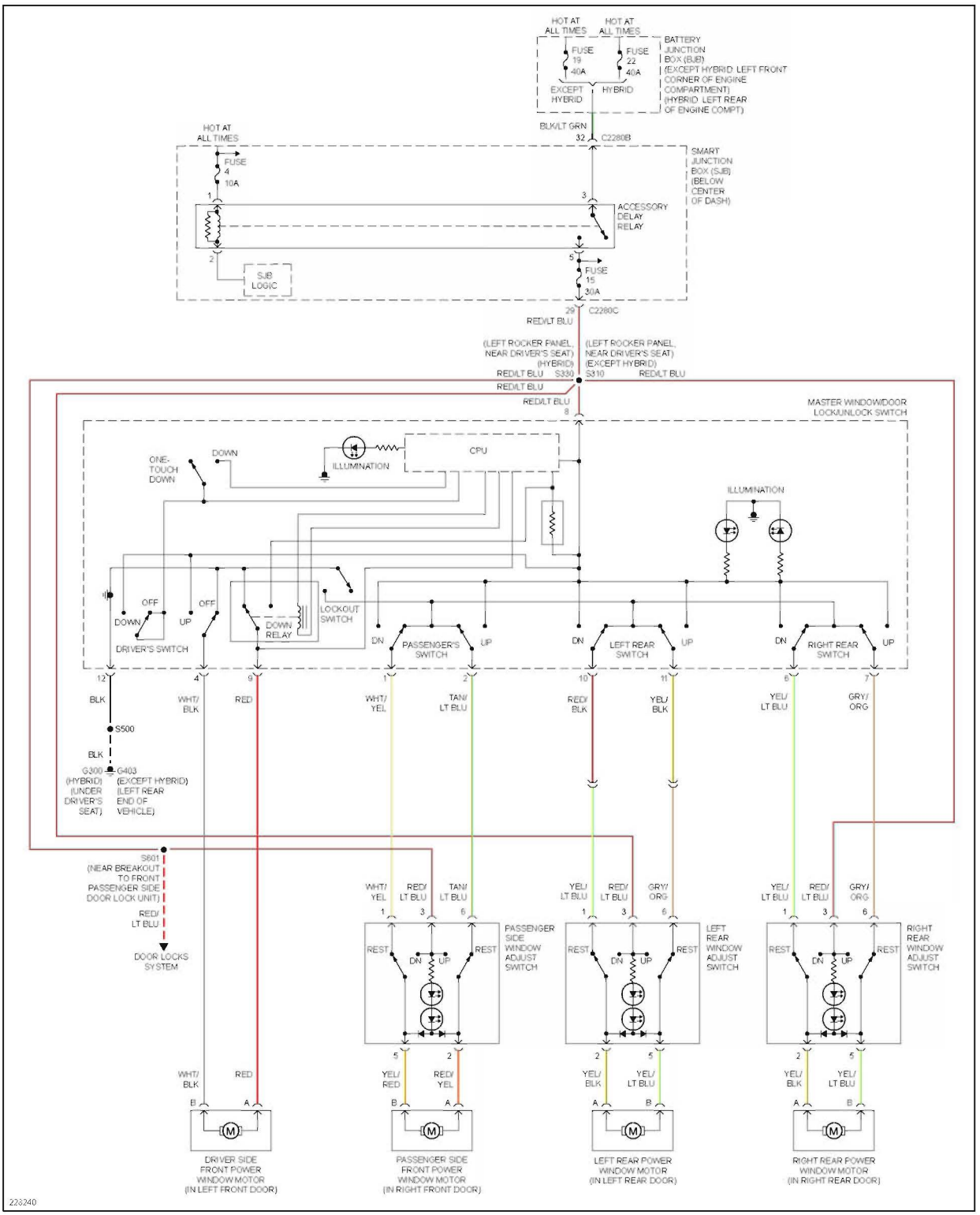

Fig. 88: Power Windows Circuit

RADIO

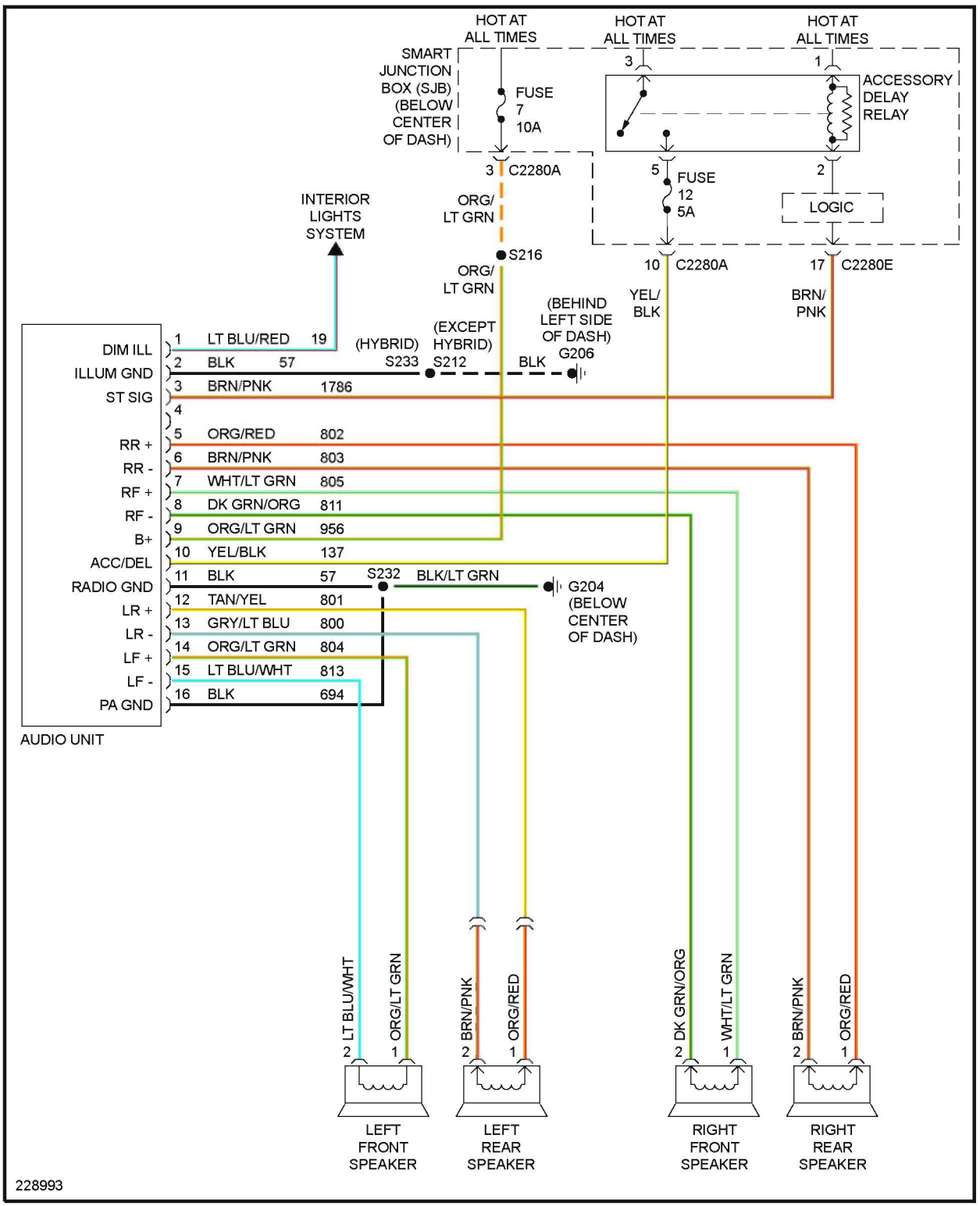

Fig. 89: Base Radio Circuit

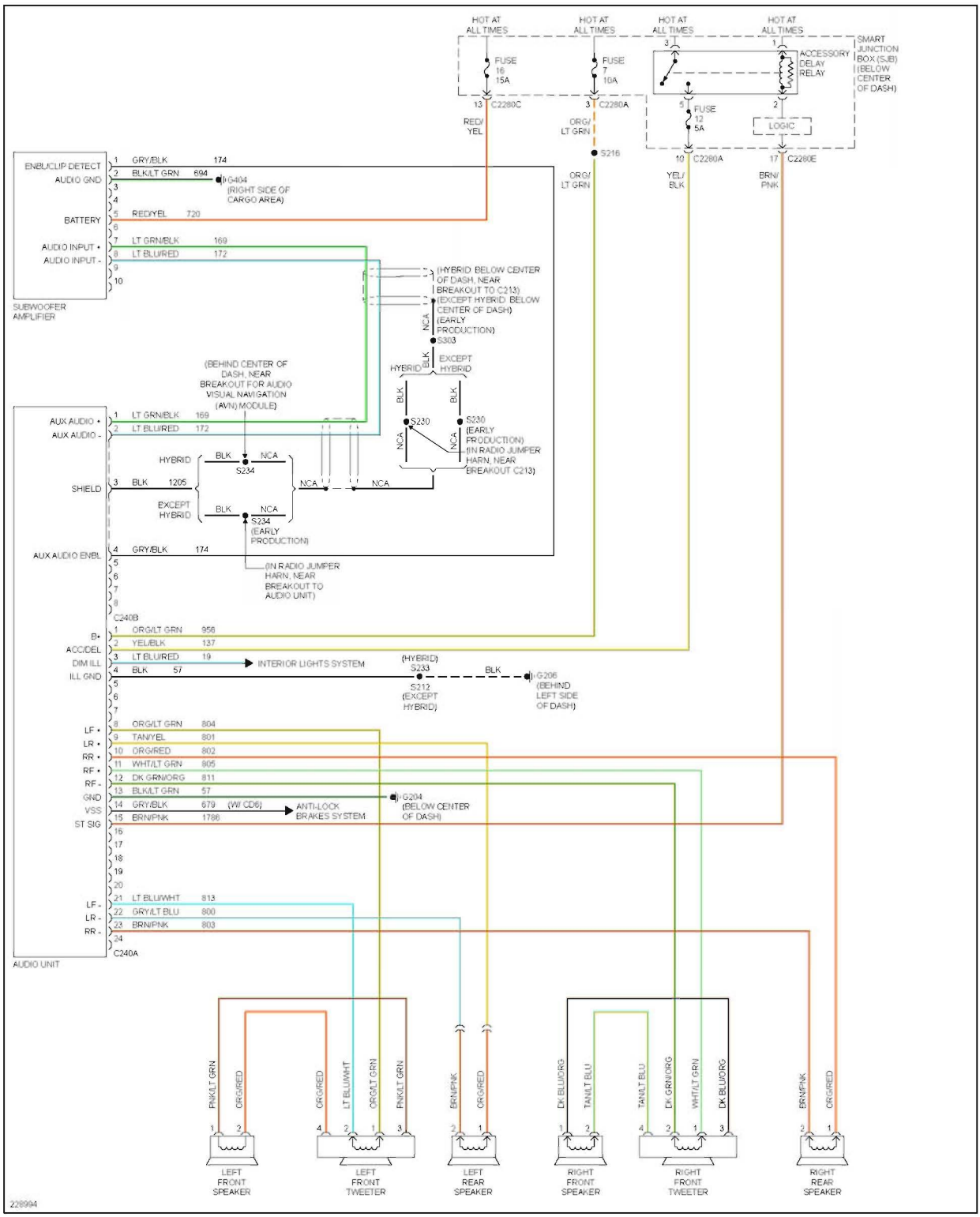

Fig. 90: Premium Radio Circuit

SHIFT INTERLOCK

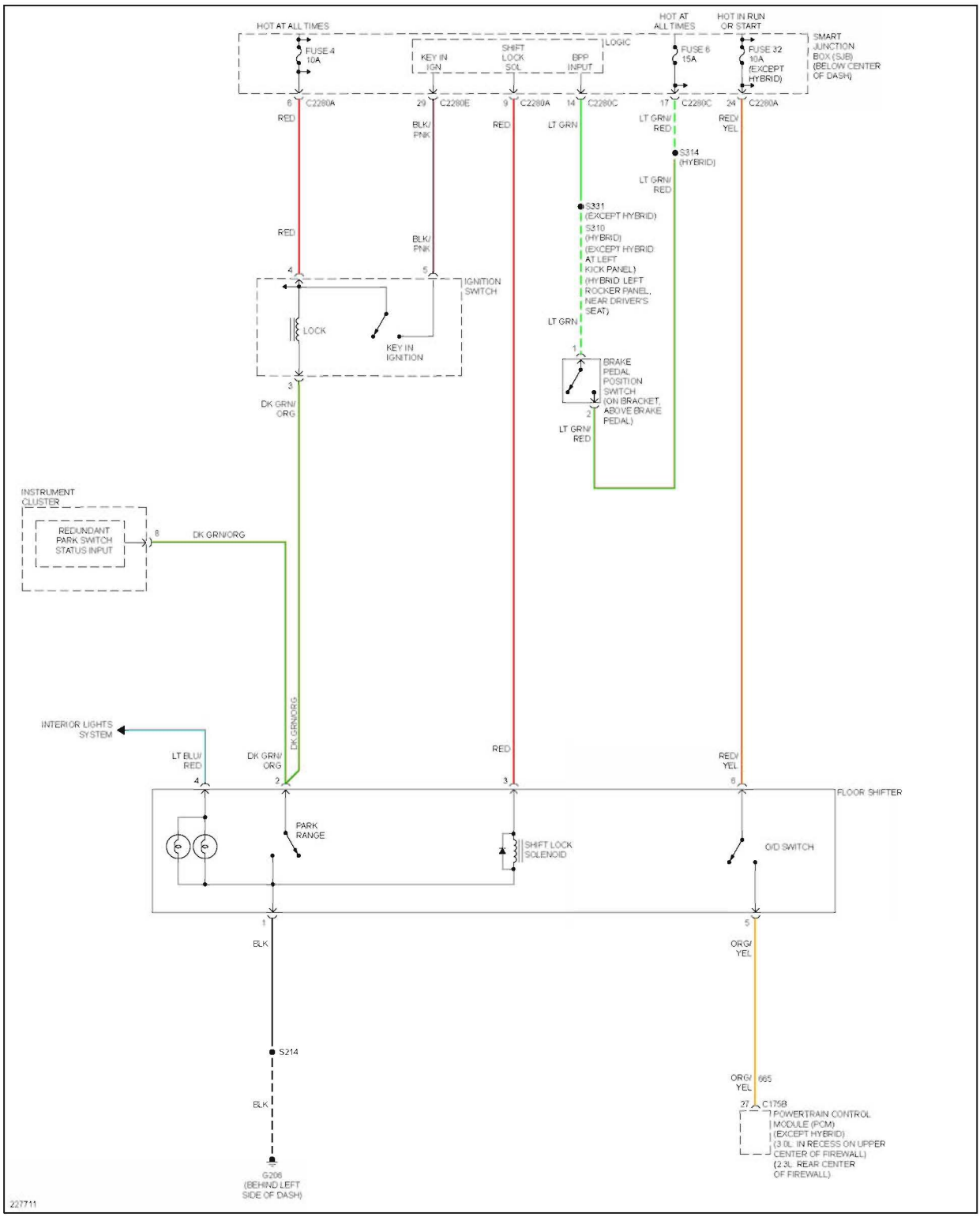

Fig. 91: Shift Interlock Circuit

STARTING/CHARGING

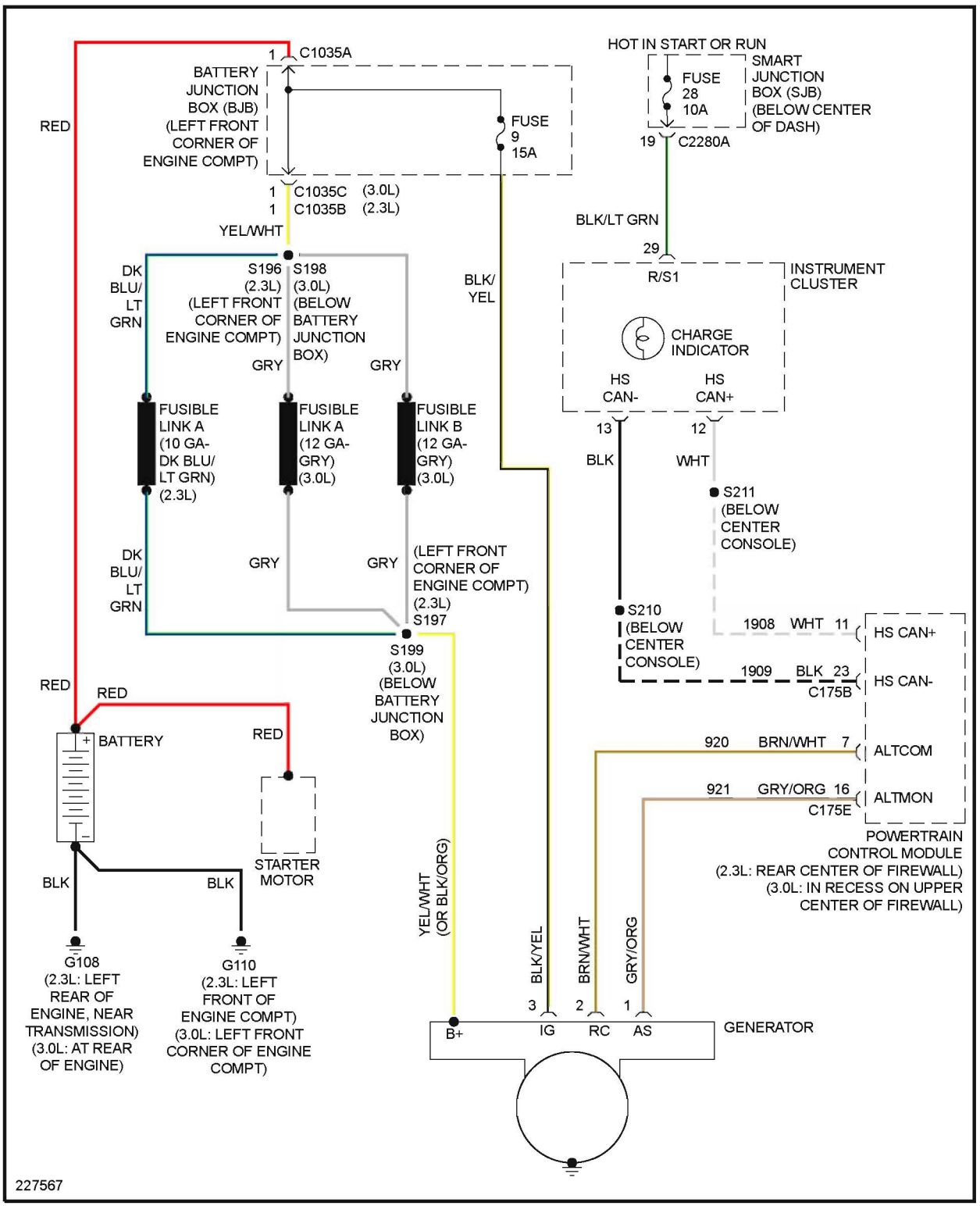

Fig. 92: Charging Circuit, Except Hybrid

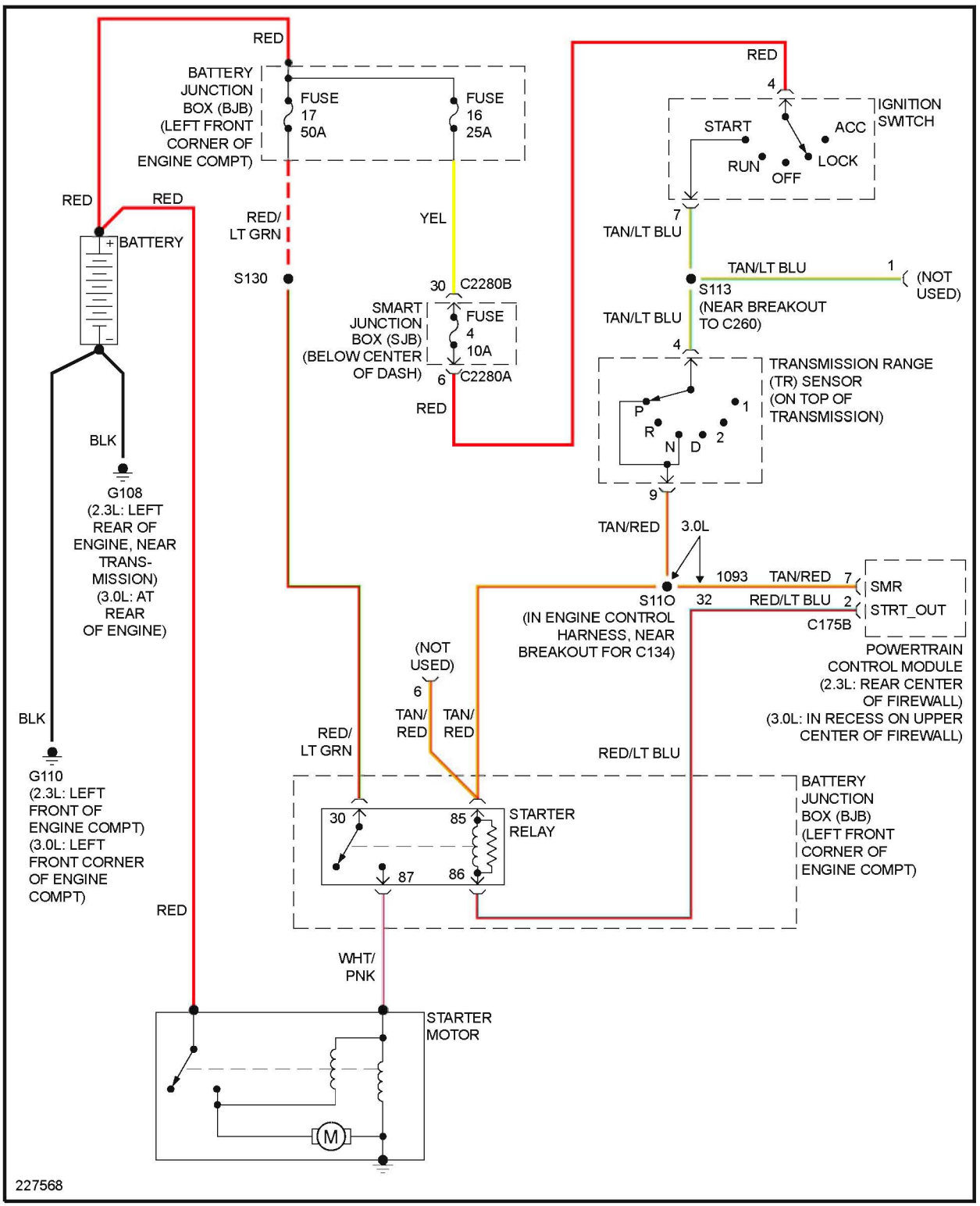

Fig. 93: Starting Circuit, A/T Except Hybrid

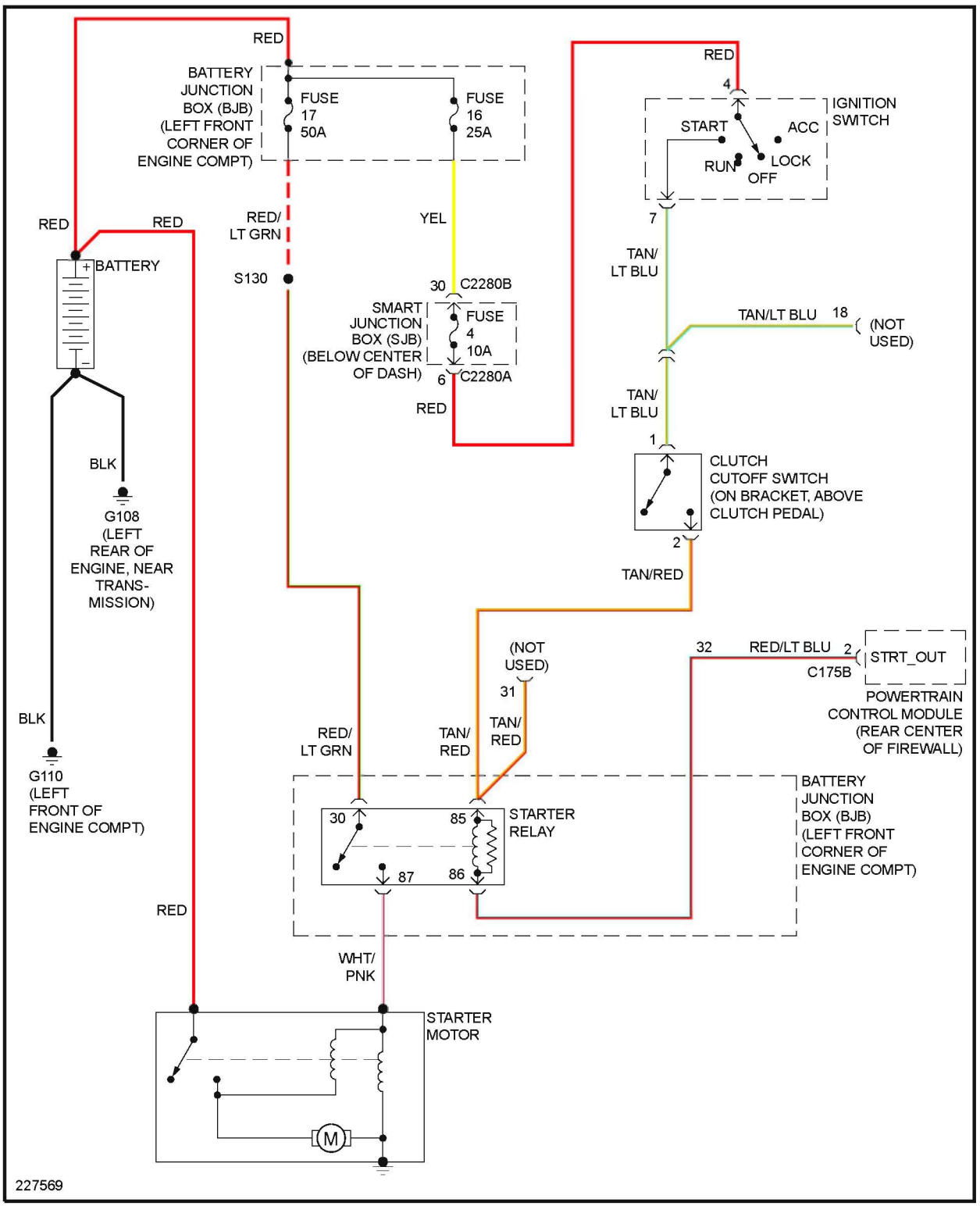

Fig. 94: Starting Circuit, M/T

SUPPLEMENTAL RESTRAINTS

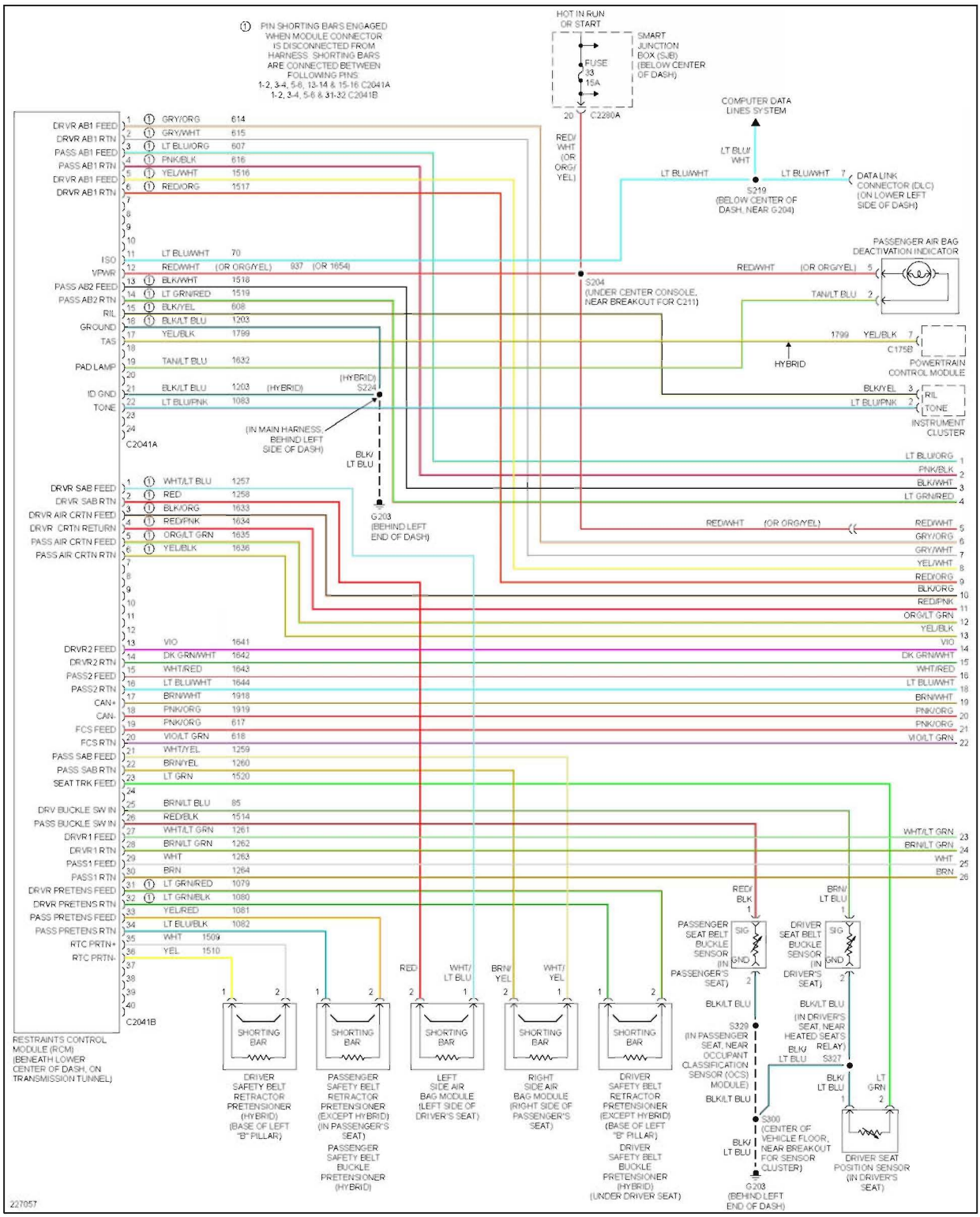

Fig. 95: Supplemental Restraints Circuit (1 of 2)

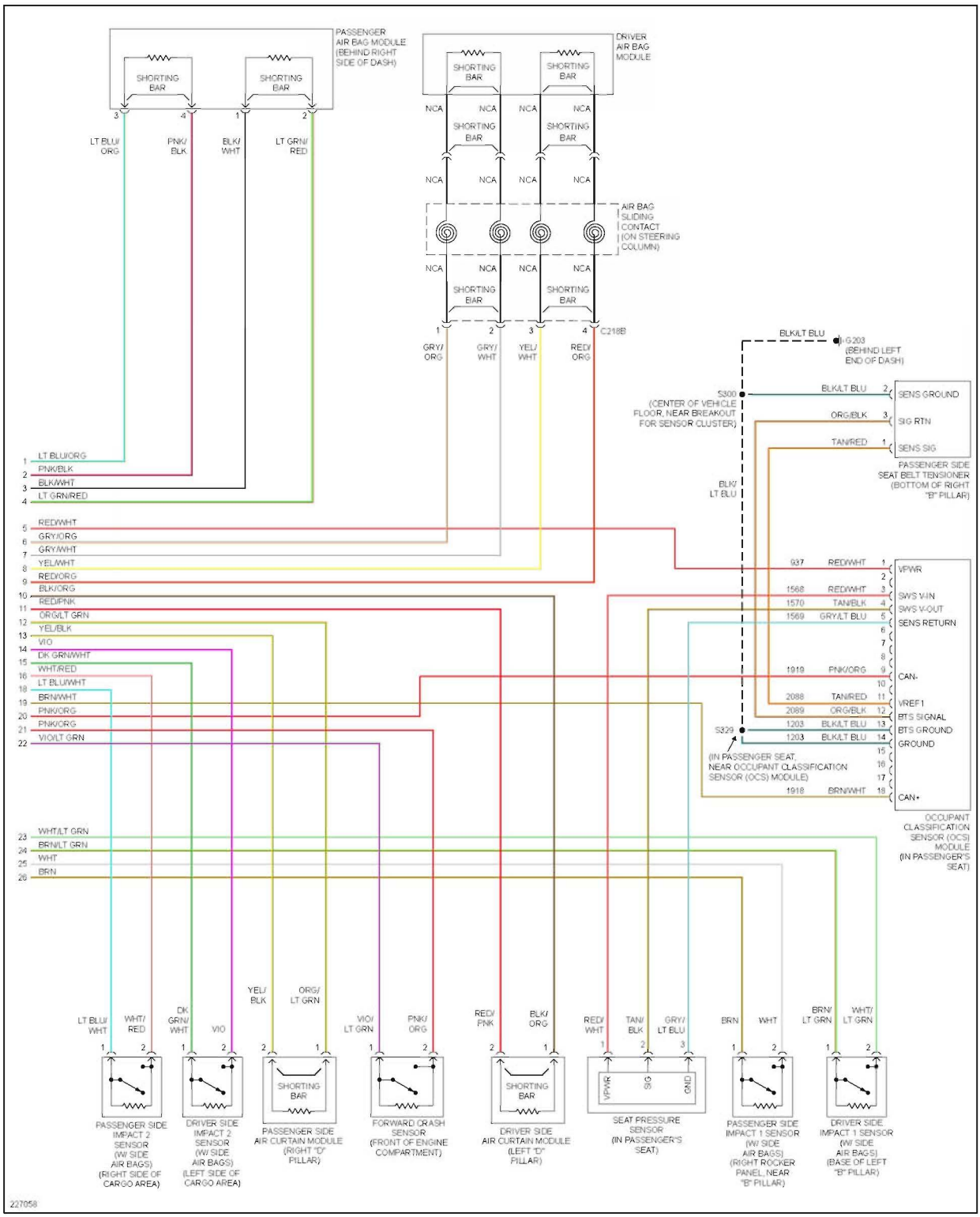

Fig. 96: Supplemental Restraints Circuit (2 of 2)

TRANSMISSION

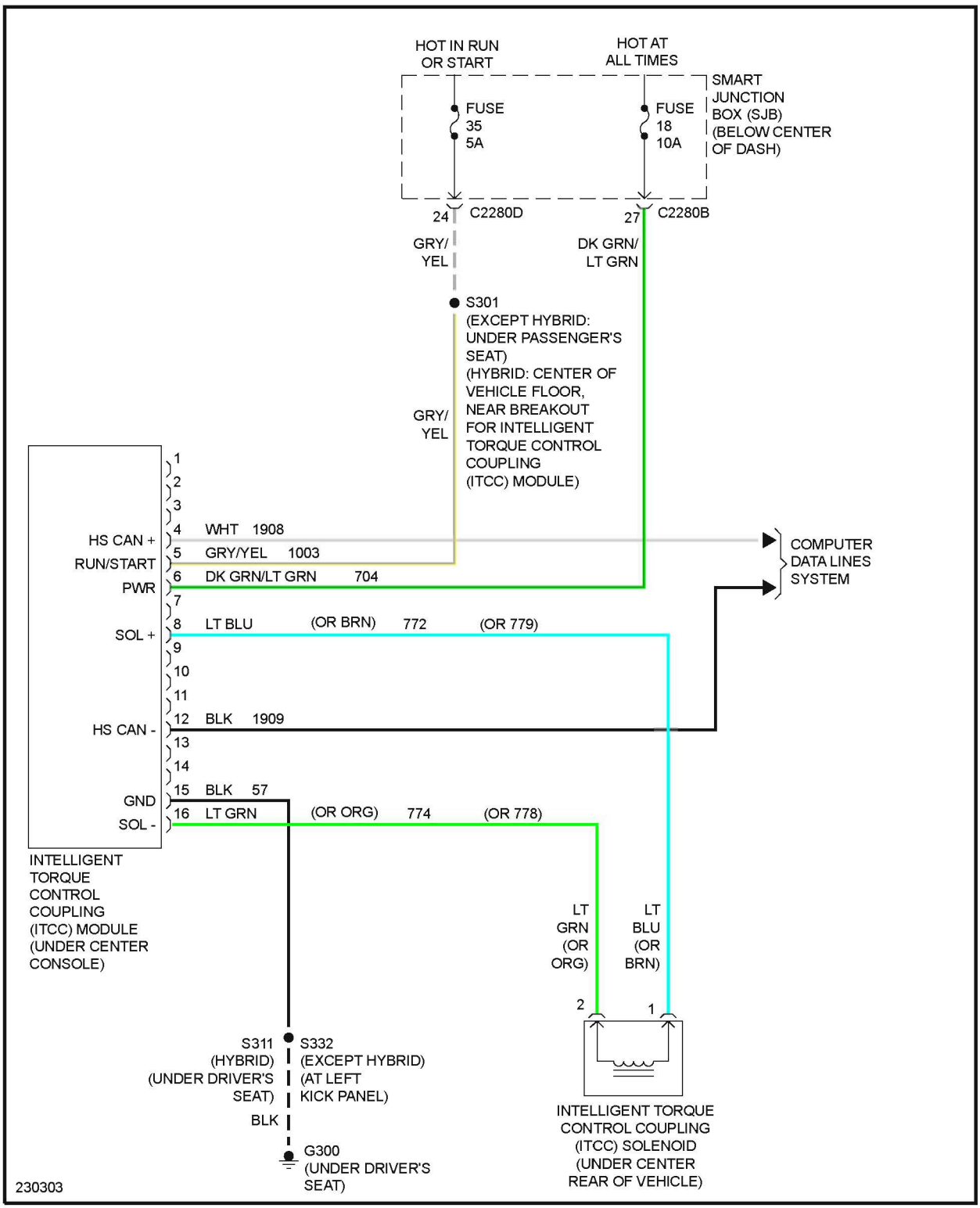

Fig. 97: 4WD Circuit

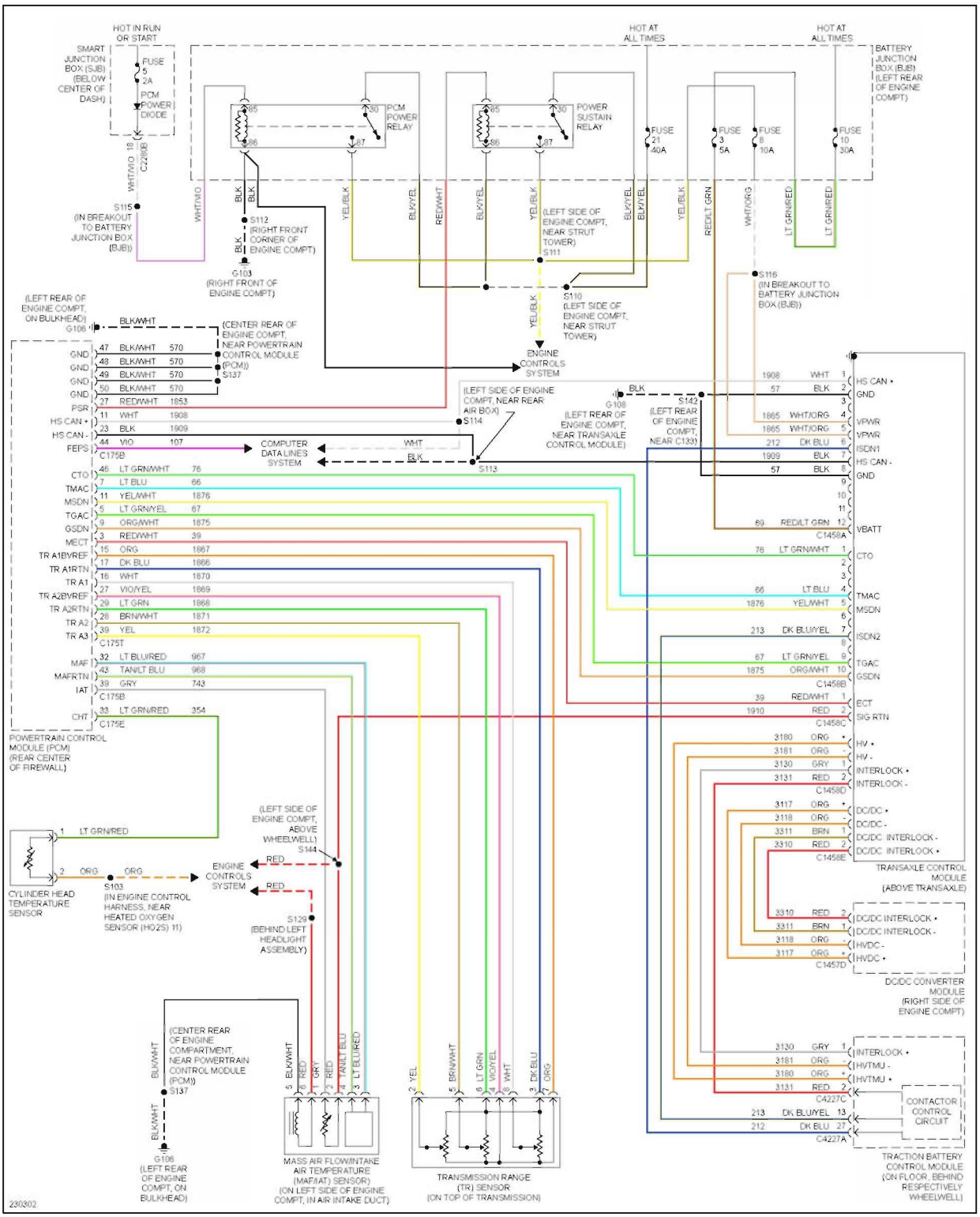

Fig. 98: A/T Circuit, Hybrid

2.3L

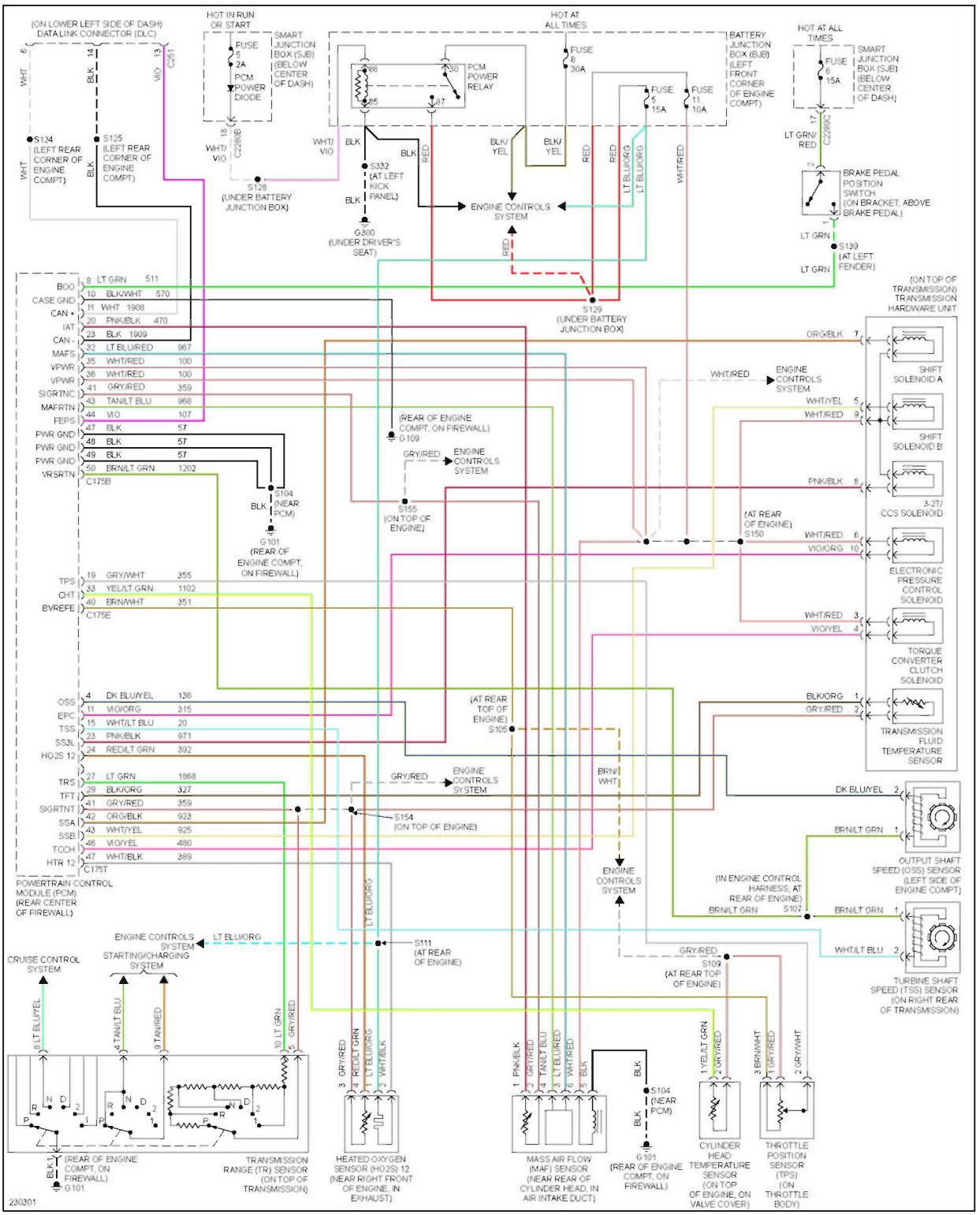

Fig. 99: 2.3L, A/T Circuit, Except Hybrid

3.0L

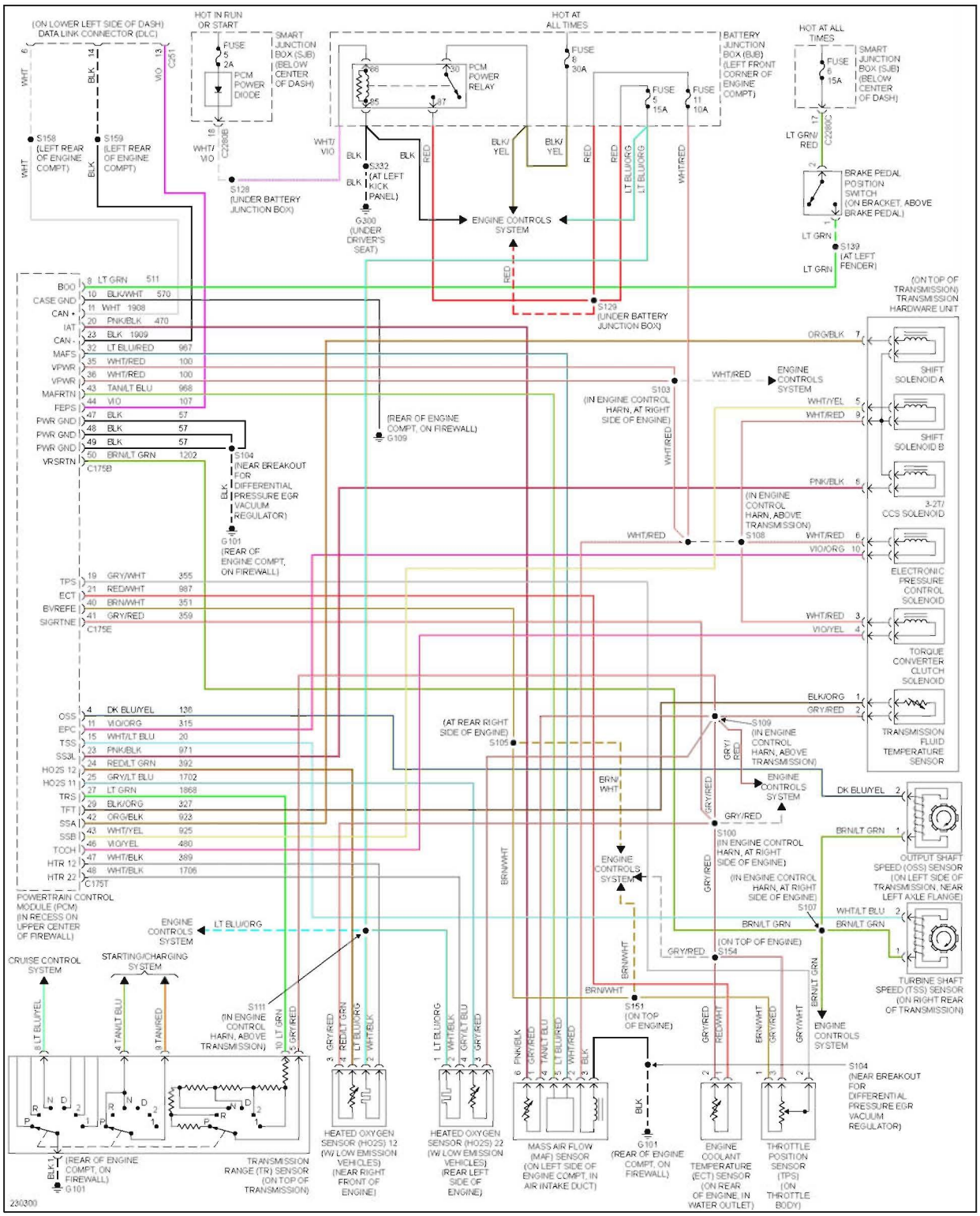

Fig. 100: 3.0L, A/T Circuit, Except Hybrid

WARNING SYSTEMS

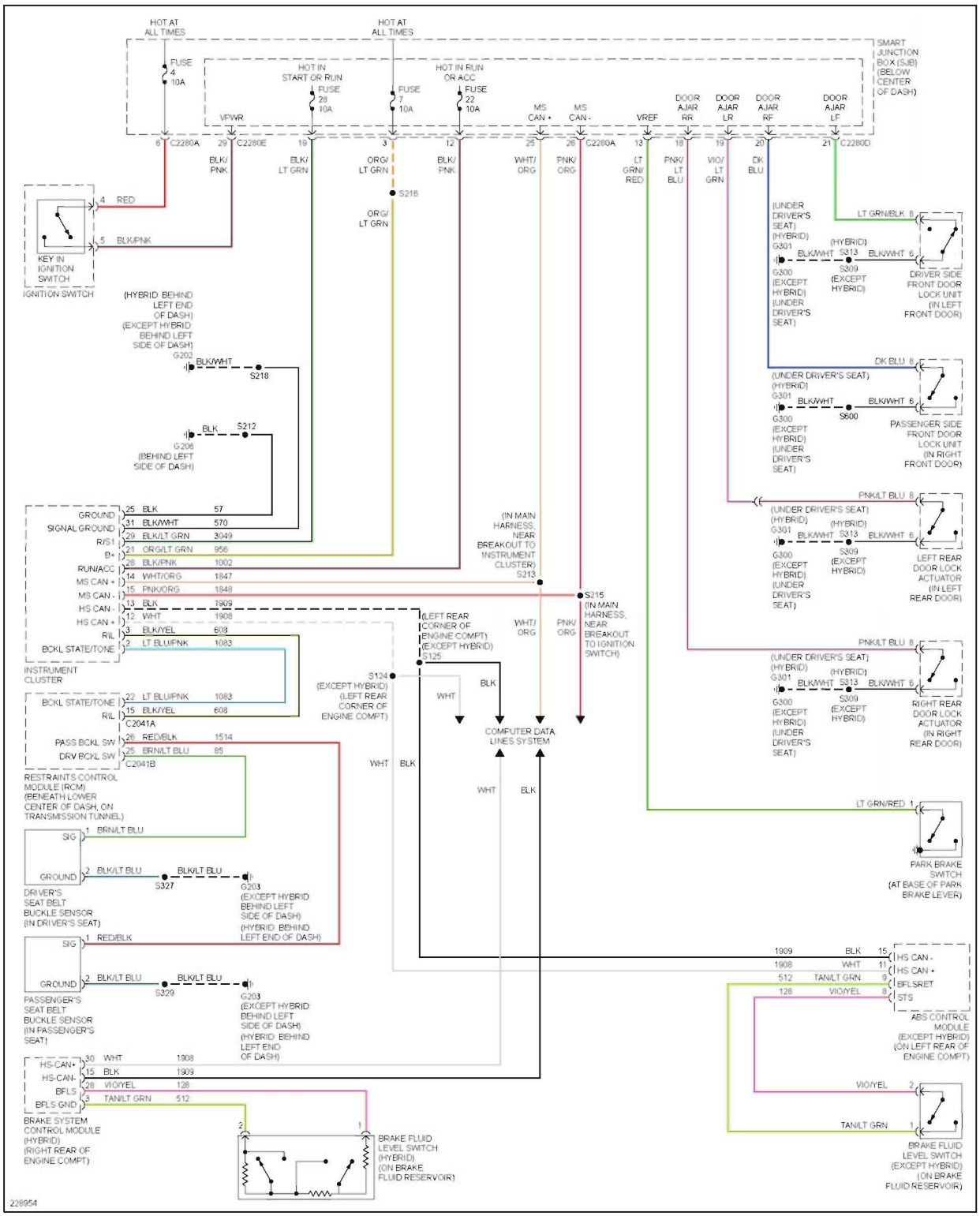

Fig. 101: Warning Systems Circuit

WIPER/WASHER

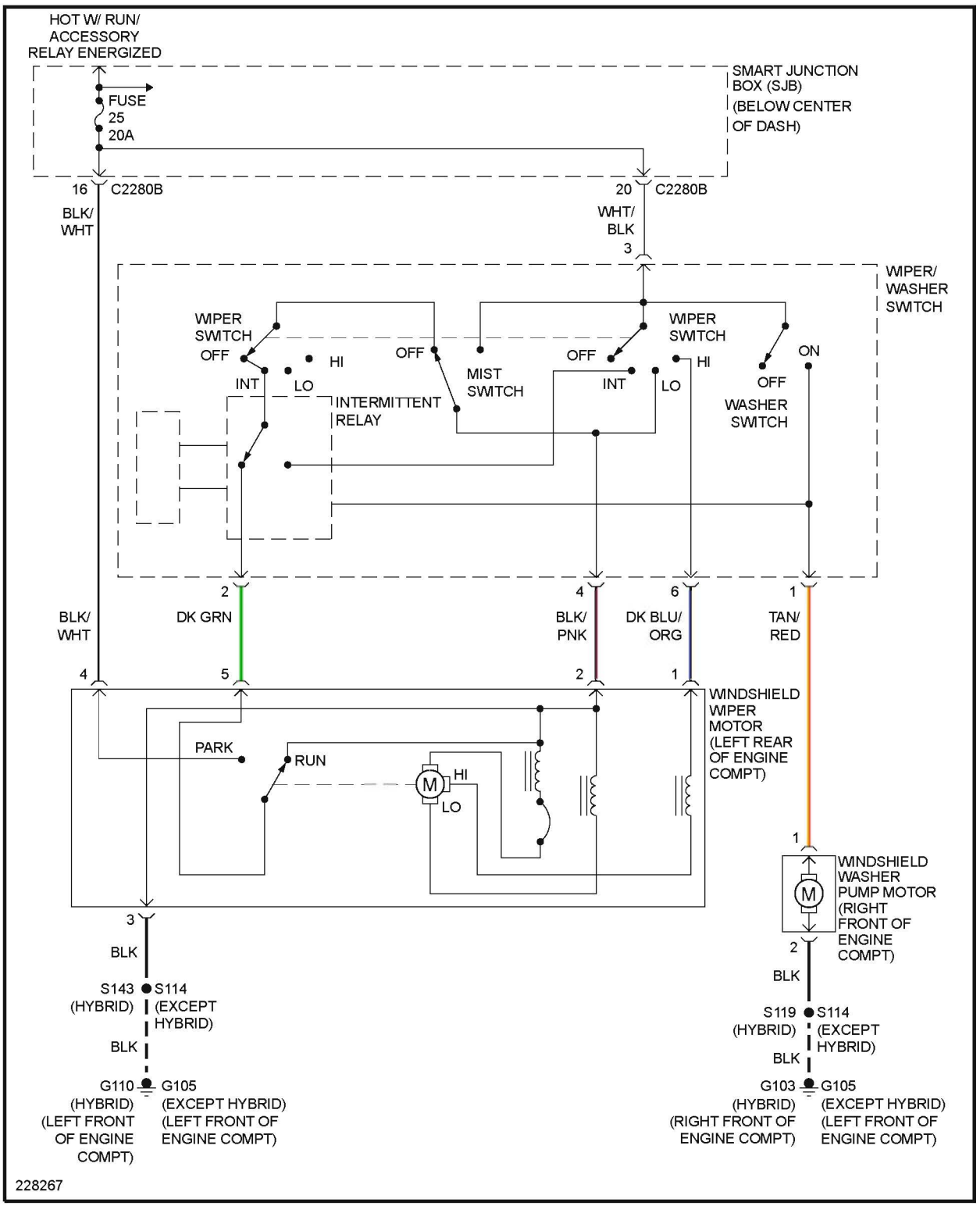

Fig. 102: Front Wiper/Washer Circuit

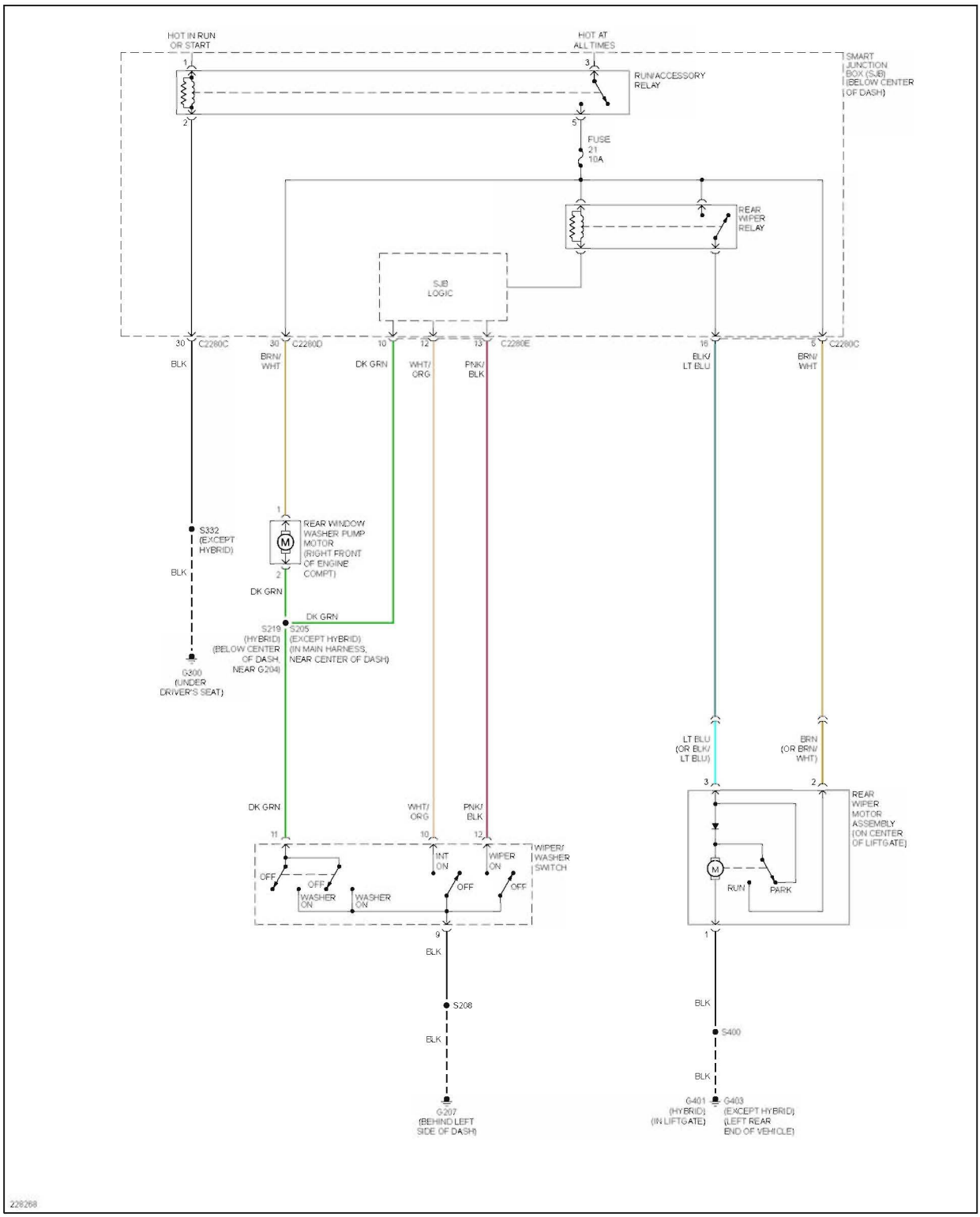

Fig. 103: Rear Wiper/Washer Circuit