YAMAHA

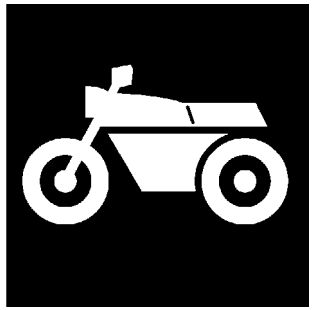

# PARTS CATALOGUE
# CATALOGO DE REPUESTOS

# YZF-R3 (2YP2) ARGENTINA,COLOMBIA,MEXICO

1R2YP-200S1

( )

YAMAHA GENUINE Parts & Accessories

2015/6/18

| NEWS NO. | DATE | COMMENT |
|---|---|---|
| PE0-MC-150032 | May,21,2015 | COR:FIG.14 TRANSSMISION LIST CORRECTION |
| PE0-MC-150043 | Jun.,11,2015 | COR:FIG.34 COWLING 1 LIST CORRECTION |

YZF-R3
PARTS CATALOGUE
©2015 by Yamaha Motor Co., Ltd.
1st edition, March 2015
All rights reserved.
Any reprinting or unauthorized use
without the written permission of
Yamaha Motor Co., Ltd.
is expressly prohibited.
Printed in Japan.

YZF-R3
CATALOGO DE REPUESTOS
©2015 por Yamaha Motor Co., Ltd.
1ª edición, marzo 2015
Todos los derechos reservados.
Toda reproducción o uso no autorizado
sin el consentimiento escrito de
Yamaha Motor Co., Ltd.
quedan expresamente prohibidos
Impreso en Japón.

# FOREWORD

This Parts Catalogue is related to the parts for the model(s) on the cover page. When you are ordering replacement parts, please refer to this Parts Catalogue and quote both part numbers and part names correctly.

1. Modifications or additions which have been made after the issue of the Parts Catalogue will be announced in the Parts News.
   It is advisable that you make the necessary corrections to the Parts Catalogue according to the Parts News.

2. Abbreviations
   The following abbreviations are used in this Parts Catalogue.

   “UR” Use specified parts number.
   “UN” Use as many as needed.
   “AP” Alternate Parts
   “LM” Locally Made (Parts need to be ordered locally)
   “F#” Frame No. (Applicable machine No.)
   “O/S” Over Size

3. The number of components for assembly
   - Parts, which are to be supplied in an assembly, are listed with a dot (.) in front of the part name as shown below.
   - The numeral appearing to the right of each component part indicates the quantity of parts for each assembly unit.

| PART NO. | DESCRIPTION | Q’TY | REMARKS |
|---|---|---|---|
| 2F5–83310–60 | FRONT FLASHER LIGHT ASSY | 2 | |
| 115–83311–60 | .BULB (6V–18W) | 1 | |

4. Applicable colours of graphics are represented in the “REMARKS” as shown below.

| PART NO. | DESCRIPTION | Q’TY | REMARKS |
|---|---|---|---|
| 2N4–24110–00–X5 | FUEL TANK COMP. | 2 | MXR |
| 3J1–24240–10 | .GRAPHIC, FUEL TANK | 1 | FOR MXR |

5. Note that the illustrations for reference in finding parts numbers are not to be used for assembling. When assembling, please use the applicable service manual.

6. The asterisk (*) before a reference number indicates modified items after the first edition.

# PROLOGO

Este catálogo de repuestos corresponde a las piezas para el o los modelos que figuran en la página de portada. Al formular el pedido de repuestos, se ruega citar este catálogo y especificar correctamente el número y el nombre de las piezas.

1. Las modificaciones y agregados que se hayan realizado después de la edición de este Catálogo de Repuestos, serán anunciados en las Informaciones de Recambios.
   Es recomendable que se hagan las correcciones necesarias en el Catálogo de Repuestos de acuerdo con las Informaciones de Recambios.

2. Abreviaciones
   En este. Catálogo de Repuestos se emplean las siguientes abreviaciones.

   "UR" Usar el número de partes especificado
   "UN" Usar la cantidad necesaria
   "AP" Piezas sustitutivas
   "LM" Fabricación local (Hay que pedir los repuestos en las cercanías)
   "F#" Nº de bastidor (Nº aplicable a la máquina)
   "O/S" Sobredimensionado

3. La cantidad de componentes para el montaje
   - Los componentes, suministrados como conjunto, se describen con un punto (.) que precede al nombre del parte como se indica a continuación.
   - La numeración que aparece a la derecha de cada descripción indica la cantidad de partes por cada unidad de conjunto.

| CODIGO Nº | DESCRIPCION | CANT. | OBSERVACIONES |
|---|---|---|---|
| 2F5–83310–60 | ENSAMBLAJE DE LA LUZ | 2 | |
| 115–83311–60 | .BOMBILLA (6V–18W) | 1 | |

4. Los colores de los componentes se indican como sigue en la columna de "OBSERVACIONES".

| CODIGO Nº | DESCRIPCION | CANT. | OBSERVACIONES |
|---|---|---|---|
| 2N4–24110–00–X5 | COMP. DEL TANQUE | 2 | MXR |
| 3J1–24240–10 | .GRAFICO, DEL TANQUE | 1 | PARA MXR |

5. Debe tenerse en cuenta que las ilustraciones sirven como guia para la búsqueda de los números de partes y no deben usarse para el montaje. Durante el montaje, se recomienda usar el manual de taller correspondiente.

6. EL asterisco (*) antes del número de referencia indica los elementos modificados después de la primera edición.

7. Applicable Serial No.

Frame Serial No.

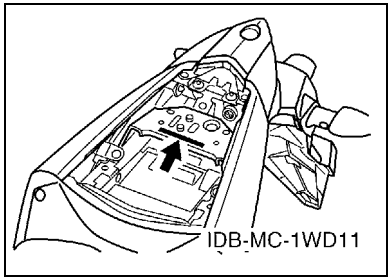


Engine Serial No.

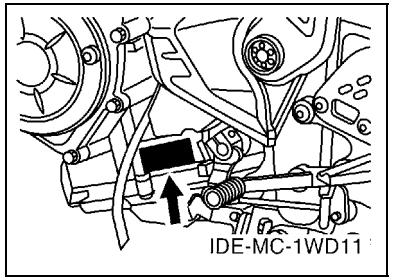


8. Applicable Colour Code (The (*) mark shows Model colour.)

| Abbreviation | Colour Name | Colour Code |
|---|---|---|
| DPBM15 | DEEP PURPLISH BLUE METALLIC 15 | 1329 |
| DPBMC(*) | DEEP PURPLISH BLUE METALLIC C | 0564 |
| LGB | LOW GLOSS BLACK | 0098 |
| MBL2 | MAT BLACK 2 | 0582 |
| MS1 | MAT SILVER 1 | 1160 |
| SMX(*) | BLACK METALLIC X | 0903 |
| VRC1(*) | VIVID RED COCKTAIL 1 | 0121 |
| WM6 | WHITE METALLIC 6 | 1124 |
| | | |
| | | |

9. Applicable Starting Serial No.

Frame Serial No.

| Serial No. | Name Of Q’ty Column | Model Code |
|---|---|---|
| | | |
| | | |
| | | |
| | | |
| | | |

Engine Serial No.

| Serial No. | Name Of Q’ty Column | Model Code |
|---|---|---|
| | | |
| | | |
| | | |
| | | |
| | | |

7. Números de serie

Nº de Serie del bastidor

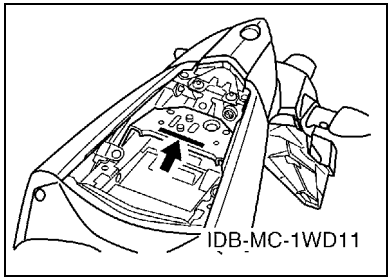


Nº de Serie del motor

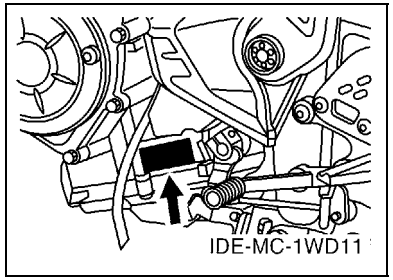


8. Códigos de color aplicables (El símbolo (*) muestra el color de modelo.)

| Abreviatura | Nombre de color | Código de color |
|---|---|---|
| DPBM15 | DEEP PURPLISH BLUE METALLIC 15 | 1329 |
| DPBMC(*) | DEEP PURPLISH BLUE METALLIC C | 0564 |
| LGB | LOW GLOSS BLACK | 0098 |
| MBL2 | MAT BLACK 2 | 0582 |
| MS1 | MAT SILVER 1 | 1160 |
| SMX(*) | BLACK METALLIC X | 0903 |
| VRC1(*) | VIVID RED COCKTAIL 1 | 0121 |
| WM6 | WHITE METALLIC 6 | 1124 |
| | | |
| | | |

9. Nº de serie inicial aplicable

Nº de Serie del bastidor

| Nº de serie | Nombre de la columna de cantidades | Código de Modelo |
|---|---|---|
| | | |
| | | |
| | | |
| | | |
| | | |

Nº de Serie del motor

| Nº de serie | Nombre de la columna de cantidades | Código de Modelo |
|---|---|---|
| | | |
| | | |
| | | |
| | | |
| | | |

# CONTENTS

## ENGINE


CYLINDER HEAD ..... 1
CRANKSHAFT & PISTON ..... 3
VALVE ..... 5
CAMSHAFT & CHAIN ..... 6
WATER PUMP ..... 7
RADIATOR & HOSE ..... 8
OIL PUMP ..... 9
INTAKE ..... 10
EXHAUST ..... 12
CRANKCASE ..... 14
CRANKCASE COVER 1 ..... 15
STARTER CLUTCH ..... 16
CLUTCH ..... 17
TRANSMISSION ..... 18
SHIFT CAM & FORK ..... 20
SHIFT SHAFT ..... 21


## CHASSIS


FRAME ..... 22
FENDER ..... 24
SIDE COVER ..... 26
REAR ARM & SUSPENSION ..... 28
STEERING ..... 29
FRONT FORK ..... 30
FUEL TANK ..... 32
SEAT ..... 35
FRONT WHEEL ..... 36
FRONT BRAKE CALIPER ..... 37
REAR WHEEL ..... 38
REAR BRAKE CALIPER ..... 40
STEERING HANDLE & CABLE ..... 41
FRONT MASTER CYLINDER ..... 42
STAND & FOOTREST ..... 43
REAR MASTER CYLINDER ..... 45
WINDSHIELD ..... 46
COWLING 1 ..... 48
GENERATOR ..... 51
STARTING MOTOR ..... 52
FLASHER LIGHT ..... 53
METER ..... 54
HEADLIGHT ..... 55
TAILLIGHT ..... 56
HANDLE SWITCH & LEVER ..... 57
ELECTRICAL 1 ..... 58
ELECTRICAL 2 ..... 59


## INDEX


NUMERICAL INDEX ..... 61

# CONTENIDO

## MOTOR

CULATA DE CILINDRO ..... 1
CIGUENAL & PISTON ..... 3
VALVULA ..... 5
ARBOL DE LEVAS & CADENA ..... 6
BOMBA DE AGUA ..... 7
RADIADOR & MANGUERA ..... 8
BOMBA DE ACEITE ..... 9
ADMISION ..... 10
DESCARGA ..... 12
CARTER ..... 14
CUBIERTA DE CARTER 1 ..... 15
EMBRAGUE DEL ARRANQUE ..... 16
EMBRAGUE ..... 17
TRANSMISION ..... 18
LEVA DE CAMBIO & HORQUILLA ..... 20
EJE DE CAMBIO & PEDAL ..... 21

## SHASIS

CUADRO ..... 22
GUARDABARRO ..... 24
CUBIERTA LATERAL ..... 26
BRAZO TRASERO & SUSPENSION ..... 28
DIRECCION ..... 29
HORQUILLA DELANTERA ..... 30
DEPOSITO DE COMBUSTIBLE ..... 32
ASIENTO ..... 35
RUEDA DELANTERA ..... 36
CALIBRE FRENO DELANTERA ..... 37
RUEDA TRASERA ..... 38
CALIBRE FRENO TRASERA ..... 40
MANILLAR & CABLE ..... 41
CILINDRO MAESTRO DELANTERO ..... 42
SOPORTE & APOYAPIE ..... 43
CILINDRO MAESTRO TRASERO ..... 45
PARABRISAS ..... 46
BOVEDA 1 ..... 48
GENERADOR ..... 51
MOTOR DE ARRANQUE ..... 52
LUZ DE DESTELLADOR ..... 53
MEDIDOR ..... 54
FARO DELANTERO ..... 55
LUZ DE COLA ..... 56
INTERRUPTOR DE MANILLAR&PALANC ..... 57
EQUIPO ELECTRICO 1 ..... 58
EQUIPO ELECTRICO 2 ..... 59

## INDICE

INDICE NUMERICO ..... 61

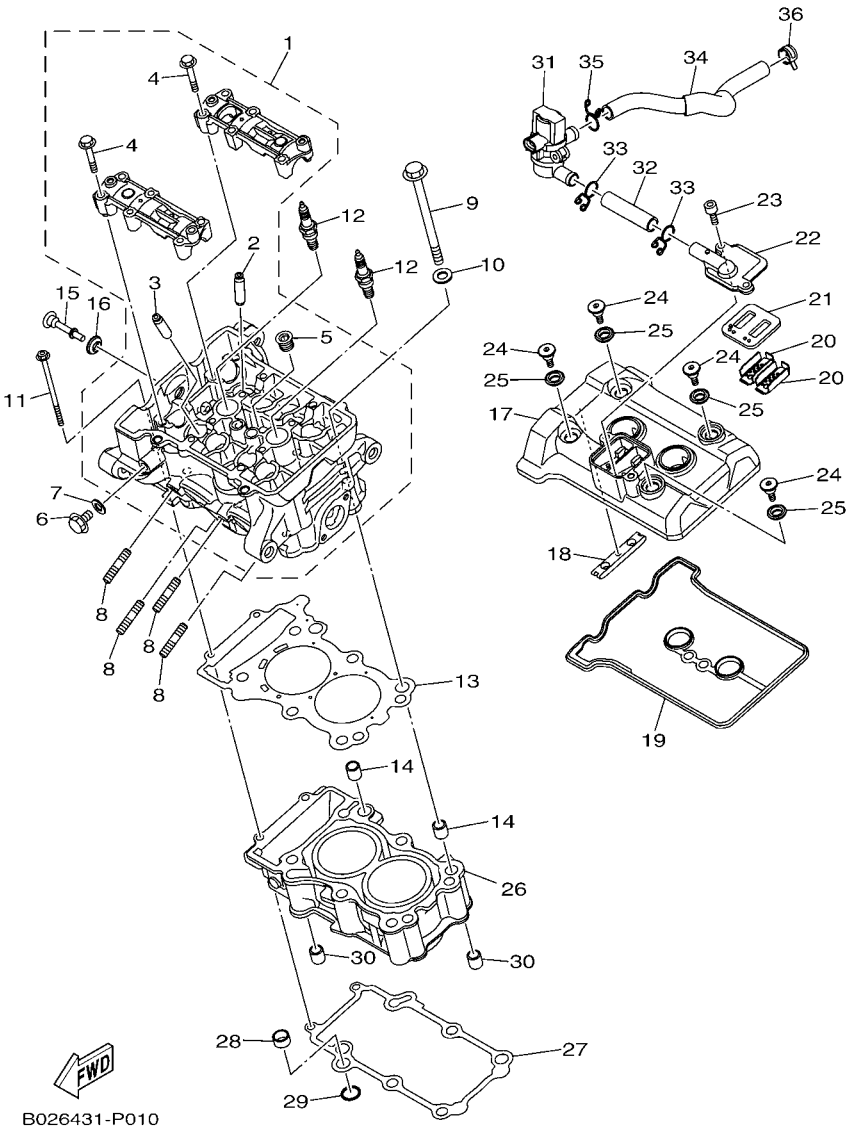


## FIG. 1 CYLINDER HEAD CULATA DE CILINDRO

| REF. NO. | PART NO. CODIGO Nº | DESCRIPTION DESCRIPCION | 2YP2 | | | | | REMARKS OBSERVACIONES |
|---|---|---|---|---|---|---|---|---|
| 1 | 2MS–E1102–00 | CYLINDER HEAD ASSY<br>CULATA DE CILINDRO COMPLETA | 1 | | | | | |
| 2 | 2MS–E1133–10 | .GUIDE, VALVE 1<br>.GUIA DE VALVULA 1 | 4 | | | | | |
| 3 | 1WD–E1133–10 | .GUIDE, VALVE 1<br>.GUIA DE VALVULA 1 | 4 | | | | | |
| 4 | 90105–06027 | .BOLT, FLANGE<br>.TORNILLO | 12 | | | | | |
| 5 | 90340–18002 | .PLUG, STRAIGHT SCREW<br>.TORNILLO, DE DRENAJE | 1 | | | | | |
| 6 | 95022–08012 | BOLT, FLANGE<br>PERNO, DE BRIDA | 1 | | | | | |
| 7 | 90430–08119 | GASKET<br>JUNTA | 1 | | | | | |
| 8 | 95612–08625 | BOLT, STUD<br>PERNO DE PUNTAL | 4 | | | | | |
| 9 | 2MS–11361–00 | BOLT, CYLINDER HOLDING 1<br>PERNO RETEN DE CILINDRO 1 | 6 | | | | | |
| 10 | 90201–10845 | WASHER, PLATE<br>ARANDELA PLANA | 6 | | | | | |
| 11 | 90110–06870 | BOLT, HEXAGON SOCKET HEAD<br>TORNILLO ALLEN | 2 | | | | | |
| 12 | 94700–00872 | PLUG, SPARK (NGK CR8E)<br>BUJIA (NGK CR8E) | 2 | | | | | |
| 13 | 2MS–E1181–00 | GASKET, CYLINDER HEAD 1<br>JUNTA, DE CULATA 1 | 1 | | | | | |
| 14 | 99530–14016 | PIN, DOWEL<br>PASADOR, DE ESPIGA | 2 | | | | | |
| 15 | 90109–06898 | BOLT<br>PERNO | 1 | | | | | |
| 16 | 1WD–E111G–00 | RUBBER, MOUNT 1<br>CASQUILLO DE GOMA | 1 | | | | | |
| 17 | 1WD–E1191–00 | COVER, CYLINDER HEAD 1<br>TAPA CULATA DE CILINDRO 1 | 1 | | | | | |
| 18 | 1WD–E2241–00 | GUIDE, STOPPER 2<br>TOPE DE GUIA 2 | 1 | | | | | |
| 19 | 1WD–E1193–00 | GASKET, HEAD COVER 1<br>EMPAQUE | 1 | | | | | |
| 20 | 5VY–1482K–00 | PLATE<br>PLACA | 2 | | | | | |
| 21 | 1WD–E4890–00 | REED VALVE ASSY<br>VALVULA DE LENGUETA COMPLETA | 1 | | | | | |
| 22 | 1WD–E4899–00 | CAP, CASE<br>TAPA, DE CAJA | 1 | | | | | |
| 23 | 91312–06020 | BOLT<br>TORNILLO | 2 | | | | | |
| 24 | 90109–06899 | BOLT<br>PERNO | 4 | | | | | |
| 25 | 1WD–E111G–00 | RUBBER, MOUNT 1<br>CASQUILLO DE GOMA | 4 | | | | | |
| 26 | 2MS–E1311–00 | CYLINDER 1<br>CILINDRO 1 | 1 | | | | | |
| 27 | 1WD–E1351–00 | GASKET, CYLINDER<br>JUNTA, DE CILINDRO | 1 | | | | | |

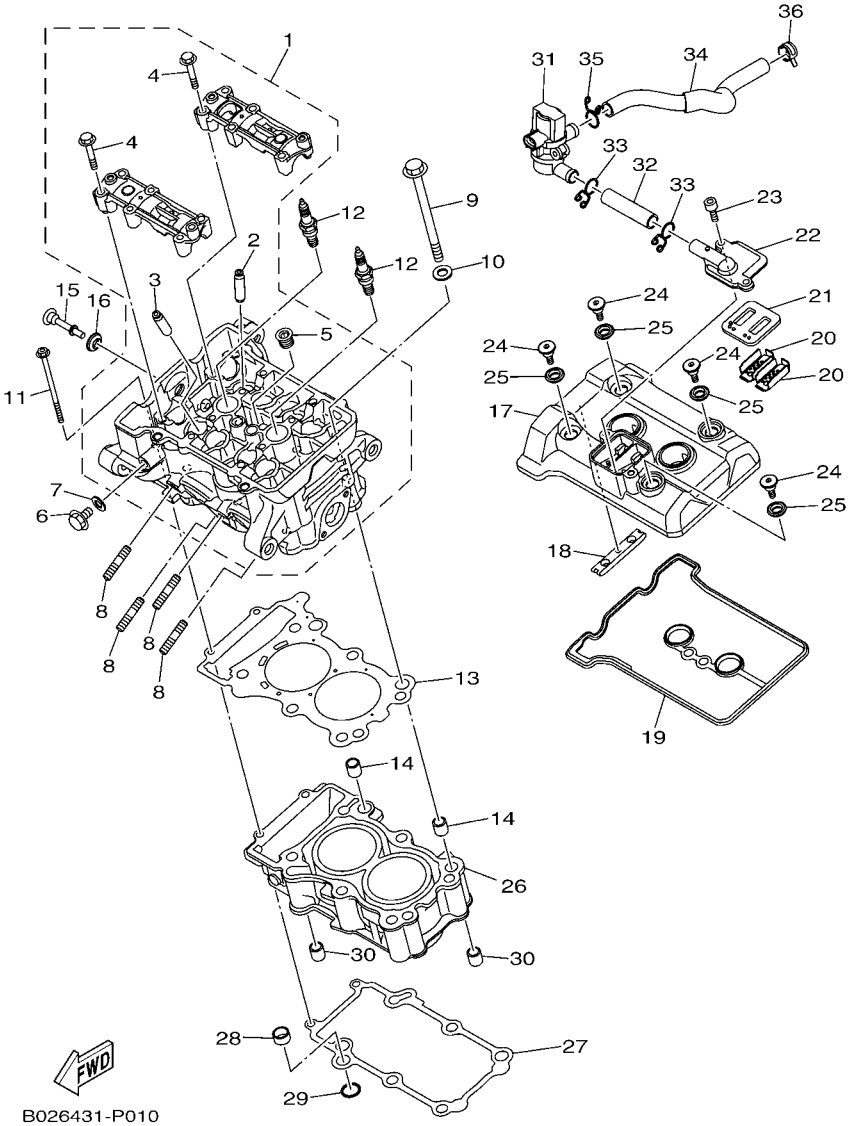


## FIG. 1 CYLINDER HEAD — CULATA DE CILINDRO

| REF. NO. | PART NO. CODIGO Nº | DESCRIPTION DESCRIPCION | 2YP2 | | | | | REMARKS OBSERVACIONES |
|---|---|---|---|---|---|---|---|---|
| 28 | 5NL–12564–00 | PIPE, WATER<br>MANGUERA DE AGUA | 1 | | | | | |
| 29 | 93210–16716 | O-RING<br>ANILLO O | 1 | | | | | |
| 30 | 99530–14016 | PIN, DOWEL<br>PASADOR, DE ESPIGA | 2 | | | | | |
| 31 | 1WD–E4840–00 | AIR CUT VALVE ASSY<br>VALVULA, CORTE DE AIRE | 1 | | | | | |
| 32 | 1WD–E4881–00 | HOSE, BEND 1<br>TUBO 1 | 1 | | | | | |
| 33 | 90467–16801 | CLIP<br>PRESILLA | 2 | | | | | |
| 34 | 1WD–E4882–00 | HOSE, BEND 2<br>TUBO 2 | 1 | | | | | |
| 35 | 90467–16801 | CLIP<br>PRESILLA | 1 | | | | | |
| 36 | 90467–16800 | CLIP<br>PRESILLA | 1 | | | | | |

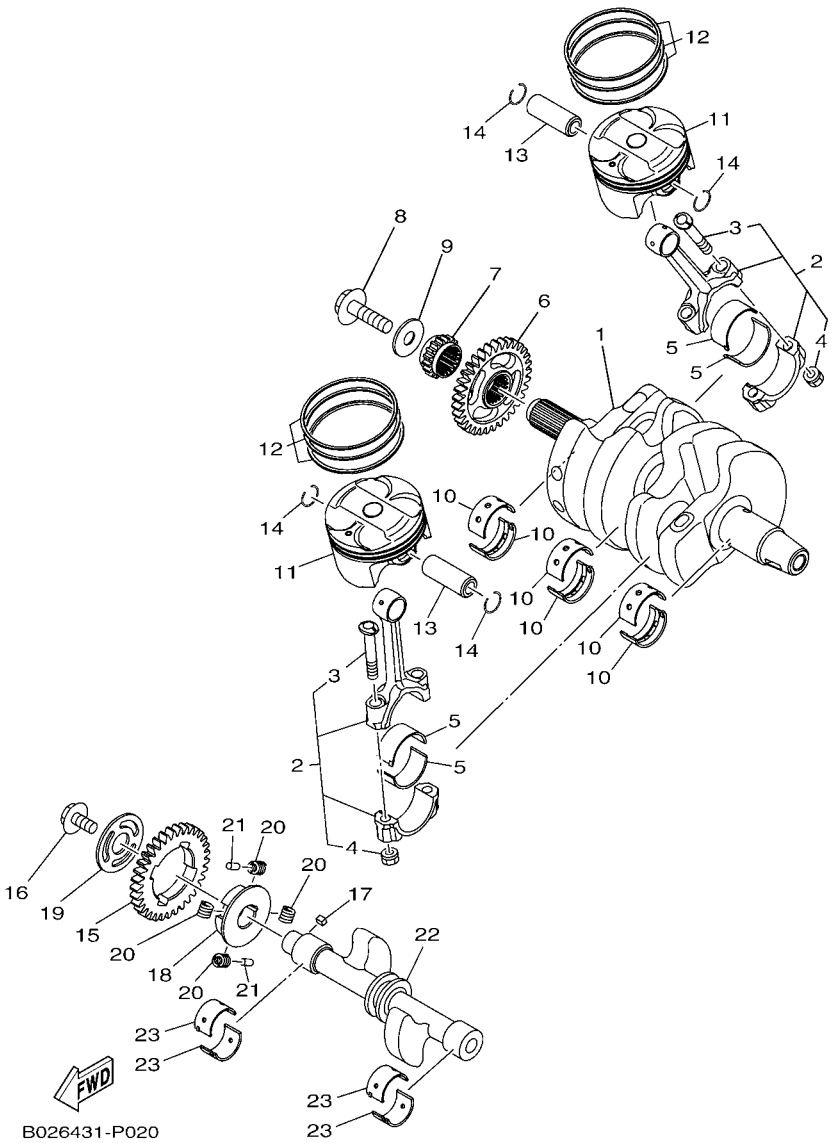


## FIG. 2 CRANKSHAFT & PISTON CIGUENAL & PISTON

| REF. NO. | PART NO. CODIGO Nº | DESCRIPTION DESCRIPCION | 2YP2 | | | | | REMARKS OBSERVACIONES |
|---|---|---|---|---|---|---|---|---|
| 1 | 1WD–11411–00 | CRANKSHAFT<br>CIGUENAL | 1 | | | | | |
| 2 | 1WD–11650–00 | CONNECTING ROD ASSY<br>BIELA COMPLETA | 2 | | | | | |
| 3 | 5SL–11654–00 | .BOLT, CONNECTING ROD<br>.TORNILLO DE BIELA | 2 | | | | | |
| 4 | 90179–07652 | .NUT<br>.TUERCA | 2 | | | | | |
| 5 | 1WD–11656–00 | PLANE BEARING, CONNECTING ROD<br>COJINETE PLANO | 4 | | | | | UR BLUE<br>UR AZUL |
| | 1WD–11656–10 | PLANE BEARING, CONNECTING ROD<br>COJINETE PLANO | 4 | | | | | UR BLACK<br>UR NEGRO |
| | 1WD–11656–20 | PLANE BEARING, CONNECTING ROD<br>COJINETE PLANO | 4 | | | | | UR BROWN<br>UR MARRON |
| | 1WD–11656–30 | PLANE BEARING, CONNECTING ROD<br>COJINETE PLANO | 4 | | | | | UR GREEN<br>UR VERDE |
| 6 | 1WD–E1536–00 | GEAR, DRIVE<br>ENGRANAJE TRACCION | 1 | | | | | |
| 7 | 1WD–E1549–00 | SPROCKET, CAM CHAIN<br>CATALINA CADENA DE LEVA | 1 | | | | | |
| 8 | 90105–10883 | BOLT, FLANGE<br>TORNILLO | 1 | | | | | |
| 9 | 90201–102R1 | WASHER, PLATE<br>ARANDELA PLANA | 1 | | | | | |
| 10 | 1WD–11416–00 | PLANE BEARING, CRANKSHAFT 1<br>COJINETE PLANO 1 | 6 | | | | | UR BLUE<br>UR AZUL |
| | 1WD–11416–10 | PLANE BEARING, CRANKSHAFT 1<br>COJINETE PLANO 1 | 6 | | | | | UR BLACK<br>UR NEGRO |
| | 1WD–11416–20 | PLANE BEARING, CRANKSHAFT 1<br>COJINETE PLANO 1 | 6 | | | | | UR BROWN<br>UR MARRON |
| | 1WD–11416–30 | PLANE BEARING, CRANKSHAFT 1<br>COJINETE PLANO 1 | 6 | | | | | UR GREEN<br>UR VERDE |
| | 1WD–11416–40 | PLANE BEARING, CRANKSHAFT 1<br>COJINETE PLANO 1 | 6 | | | | | UR YELLOW<br>UR AMARILLO |
| 11 | 2MS–E1631–00 | PISTON (STD)<br>PISTON (NORMA) | 2 | | | | | |
| 12 | 2MS–E1603–00 | PISTON RING SET (STD)<br>JUEGO DE ANILLOS (NORMA) | 2 | | | | | |
| 13 | 1WD–E1633–00 | PIN, PISTON<br>PASADOR, PISTON | 2 | | | | | |
| 14 | 93450–16068 | CIRCLIP<br>SEGURO | 4 | | | | | |
| 15 | 1WD–E1531–00 | GEAR, BALANCE WEIGHT<br>ENGRANAJE CONTRAPESO | 1 | | | | | |
| 16 | 90105–088F8 | BOLT, FLANGE<br>TORNILLO | 1 | | | | | |
| 17 | 90282–04036 | KEY, STRAIGHT<br>CHAVETA, RECTA | 1 | | | | | |
| 18 | 1WD–E1496–00 | BOSS, BUFFER<br>COPA TOPE | 1 | | | | | |
| 19 | 90201–16812 | WASHER, PLATE<br>ARANDELA PLANA | 1 | | | | | |
| 20 | 90501–22800 | SPRING, COMPRESSION<br>RESORTE DE COMPRESION | 4 | | | | | |

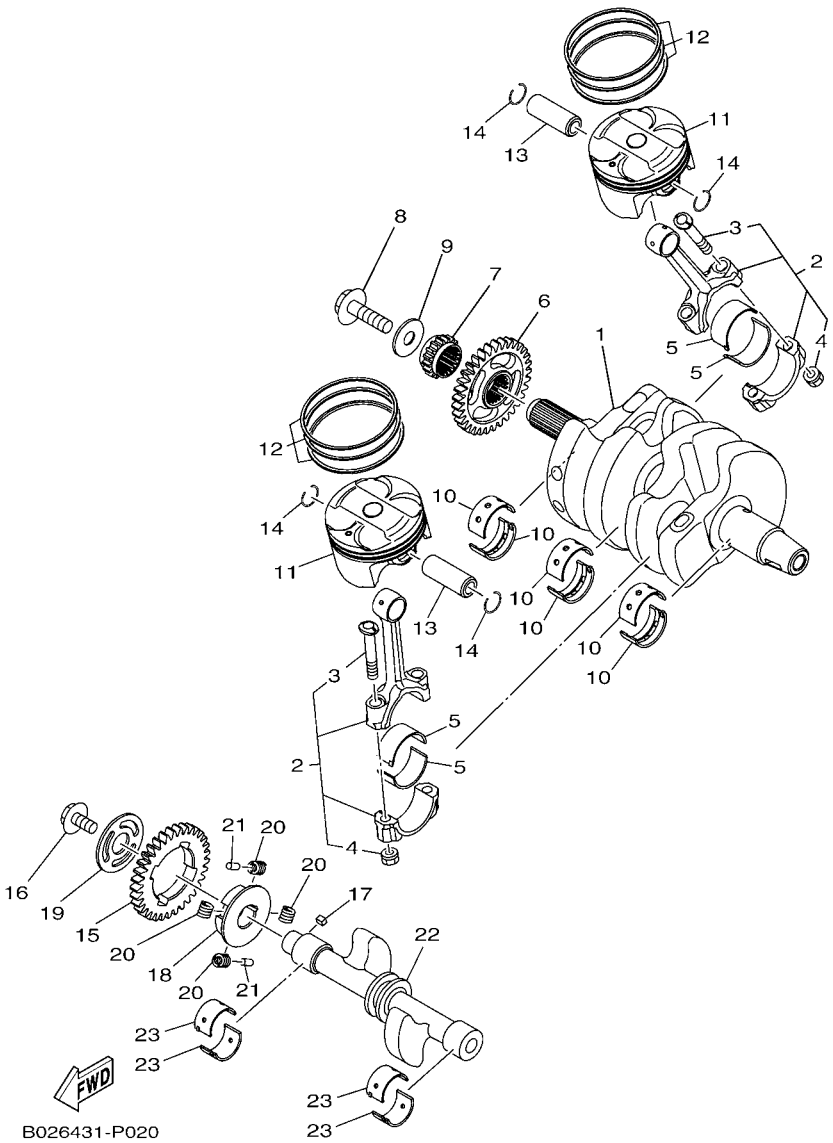


## FIG. 2 CRANKSHAFT & PISTON CIGUENAL & PISTON

| REF. NO. | PART NO. CODIGO Nº | DESCRIPTION DESCRIPCION | 2YP2 | | | | | REMARKS OBSERVACIONES |
|---|---|---|---|---|---|---|---|---|
| 21 | 93605–10090 | PIN, DOWEL<br>PASADOR DE CLAVIJA | 2 | | | | | |
| 22 | 1WD–E1454–00 | WEIGHT 1<br>PESO 1 | 1 | | | | | |
| 23 | 1WD–11413–00 | METAL, BALANCE WEIGHT<br>METAL, CONTRAPESO | 4 | | | | | UR BLUE<br>UR AZUL |
| | 1WD–11413–10 | METAL, BALANCE WEIGHT<br>METAL, CONTRAPESO | 4 | | | | | UR BLACK<br>UR NEGRO |
| | 1WD–11413–20 | METAL, BALANCE WEIGHT<br>METAL, CONTRAPESO | 4 | | | | | UR BROWN<br>UR MARRON |
| | 1WD–11413–30 | METAL, BALANCE WEIGHT<br>METAL, CONTRAPESO | 4 | | | | | UR GREEN<br>UR VERDE |
| | 1WD–11413–40 | METAL, BALANCE WEIGHT<br>METAL, CONTRAPESO | 4 | | | | | UR YELLOW<br>UR AMARILLO |

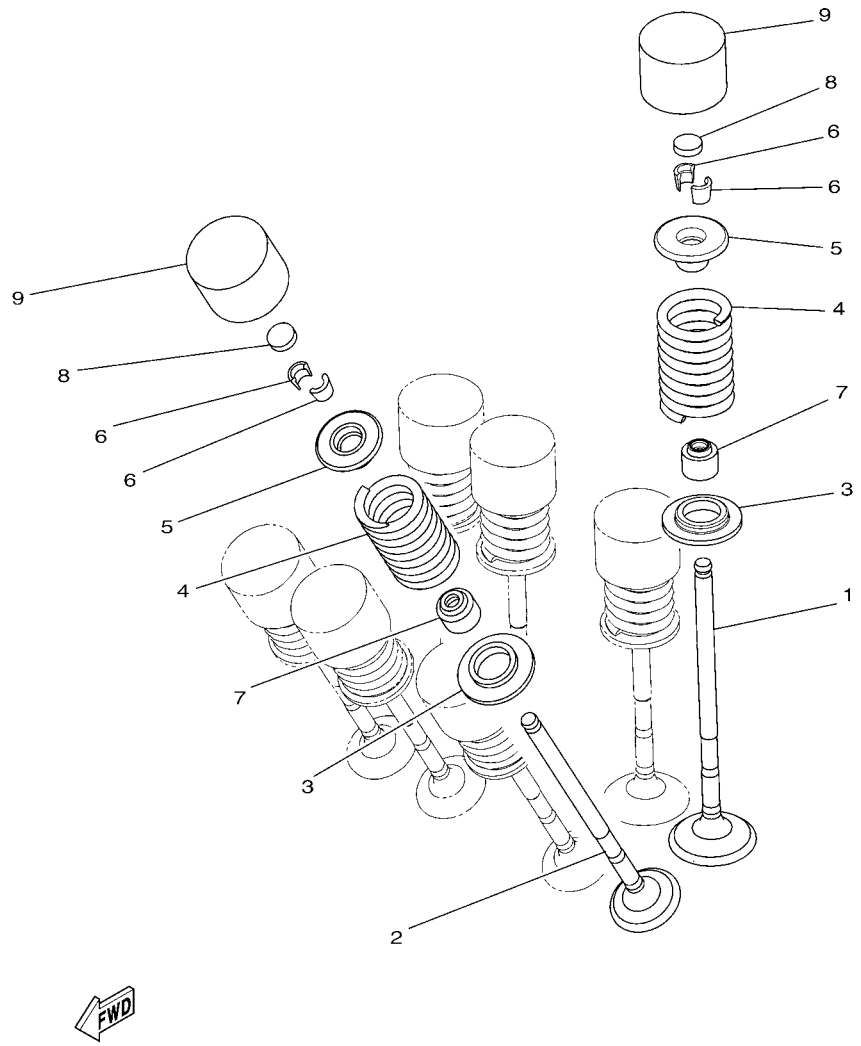


1WD1460-P030

## FIG. 3 VALVE VALVULA

| REF. NO. | PART NO. CODIGO Nº | DESCRIPTION DESCRIPCION | 2YP2 | | | | | REMARKS OBSERVACIONES |
|---|---|---|---|---|---|---|---|---|
| 1 | 2MS–E2111–00 | VALVE, INTAKE<br>VALVULA DE ADMISION | 4 | | | | | |
| 2 | 2MS–E2121–00 | VALVE, EXHAUST<br>VALVULA DE ESCAPE | 4 | | | | | |
| 3 | 2MS–E2126–00 | SEAT, VALVE SPRING 2<br>ASIENTO RESORTE DE VALVULA2 | 8 | | | | | |
| 4 | 2MS–E2113–00 | SPRING, VALVE INNER<br>RESORTE VALVULA INTERNA | 8 | | | | | |
| 5 | 2MS–E2117–00 | RETAINER, VALVE SPRING<br>RETEN RESORTE DE VALVULA | 8 | | | | | |
| 6 | 3S0–E2118–00 | LOCK, VALVE SPRING RETAINER<br>SEGURO DE VALVULA | 16 | | | | | |
| 7 | 1PA–E2119–00 | SEAL, VALVE STEM<br>SELLO DE ACEITE VALVULA | 8 | | | | | |
| 8 | 1HX–12168–F0 | PAD, ADJUSTING 2 (1.50)<br>COJIN, AJUSTADOR 2 (1.50) | 8 | | | | | UR<br>UR |
| | 1HX–12168–H1 | PAD, ADJUSTING 2 (1.55)<br>COJIN, AJUSTADOR 2 (1.55) | 8 | | | | | UR<br>UR |
| | 1HX–12168–K1 | PAD, ADJUSTING 2 (1.60)<br>COJIN, AJUSTADOR 2 (1.60) | 8 | | | | | UR<br>UR |
| | 1HX–12168–M1 | PAD, ADJUSTING 2 (1.65)<br>COJIN, AJUSTADOR 2 (1.65) | 8 | | | | | UR<br>UR |
| | 1HX–12168–R1 | PAD, ADJUSTING 2 (1.70)<br>COJIN, AJUSTADOR 2 (1.70) | 8 | | | | | UR<br>UR |
| | 1HX–12168–U1 | PAD, ADJUSTING 2 (1.75)<br>COJIN, AJUSTADOR 2 (1.75) | 8 | | | | | UR<br>UR |
| | 1HX–12168–W1 | PAD, ADJUSTING 2 (1.80)<br>COJIN, AJUSTADOR 2 (1.80) | 8 | | | | | UR<br>UR |
| | 1HX–12168–Y1 | PAD, ADJUSTING 2 (1.85)<br>COJIN, AJUSTADOR 2 (1.85) | 8 | | | | | UR<br>UR |
| | 1HX–12169–11 | PAD, ADJUSTING 2 (1.90)<br>COJIN, AJUSTADOR 2 (1.90) | 8 | | | | | UR<br>UR |
| | 1HX–12169–31 | PAD, ADJUSTING 2 (1.95)<br>COJIN, AJUSTADOR 2 (1.95) | 8 | | | | | UR<br>UR |
| | 1HX–12169–50 | PAD, ADJUSTING 2 (2.00)<br>COJIN, AJUSTADOR 2 (2.00) | 8 | | | | | UR<br>UR |
| | 1HX–12169–70 | PAD, ADJUSTING 2 (2.05)<br>COJIN, AJUSTADOR 2 (2.05) | 8 | | | | | UR<br>UR |
| | 1HX–12169–90 | PAD, ADJUSTING 2 (2.10)<br>COJIN, AJUSTADOR 2 (2.10) | 8 | | | | | UR<br>UR |
| | 1HX–12169–E0 | PAD, ADJUSTING 2 (2.15)<br>COJIN, AJUSTADOR 2 (2.15) | 8 | | | | | UR<br>UR |
| | 1HX–12169–G0 | PAD, ADJUSTING 2 (2.20)<br>COJIN, AJUSTADOR 2 (2.20) | 8 | | | | | UR<br>UR |
| | 1HX–12169–J0 | PAD, ADJUSTING 2 (2.25)<br>COJIN, AJUSTADOR 2 (2.25) | 8 | | | | | UR<br>UR |
| | 1HX–12169–L0 | PAD, ADJUSTING 2 (2.30)<br>COJIN, AJUSTADOR 2 (2.30) | 8 | | | | | UR<br>UR |
| | 1HX–12169–N0 | PAD, ADJUSTING 2 (2.35)<br>COJIN, AJUSTADOR 2 (2.35) | 8 | | | | | UR<br>UR |
| | 1HX–12169–T0 | PAD, ADJUSTING 2 (2.40)<br>COJIN, AJUSTADOR 2 (2.40) | 8 | | | | | UR<br>UR |
| 9 | 2MS–12153–10 | LIFTER, VALVE<br>LEVANTADOR DE VALVULA | 8 | | | | | UR<br>UR |

## FIG. 4 CAMSHAFT & CHAIN ARBOL DE LEVAS & CADENA

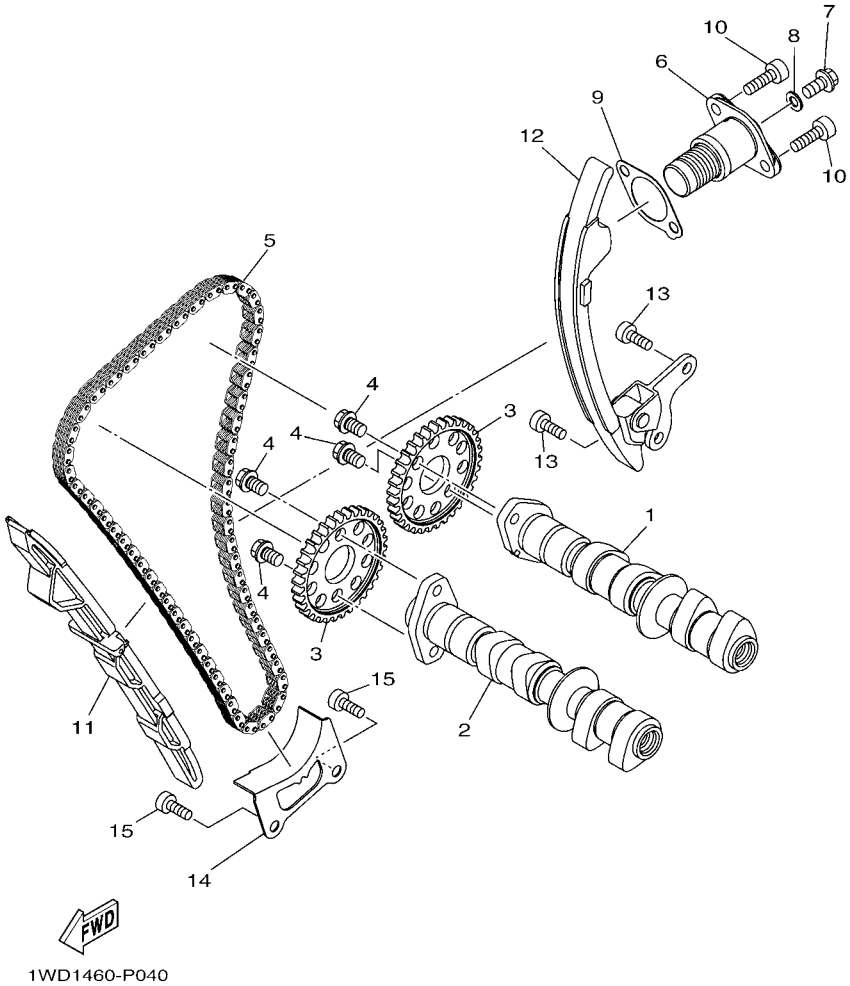


| REF. NO. | PART NO. CODIGO Nº | DESCRIPTION DESCRIPCION | 2YP2 | | | | | REMARKS OBSERVACIONES |
|---|---|---|---|---|---|---|---|---|
| 1 | 2MS–E2170–00 | CAMSHAFT ASSY 1<br>ARBOL DE LEVAS COMPLETO 1 | 1 | | | | | |
| 2 | 2MS–E2180–00 | CAMSHAFT ASSY 2<br>ARBOL DE LEVAS COMPLETO 2 | 1 | | | | | |
| 3 | 1WD–E2176–00 | SPROCKET, CAM CHAIN<br>CATALINA DE CADENA | 2 | | | | | |
| 4 | 90105–07800 | BOLT, FLANGE<br>TORNILLO | 4 | | | | | |
| 5 | 94591–61118 | CHAIN<br>CADENA | 1 | | | | | |
| 6 | 2MS–12210–00 | TENSIONER ASSY, CAM CHAIN<br>TENSOR CADENA DE LEVA | 1 | | | | | |
| 7 | 95022–06008 | BOLT, FLANGE<br>PERNO, DE BRIDA | 1 | | | | | |
| 8 | 90430–06014 | GASKET<br>JUNTA | 1 | | | | | |
| 9 | 1WD–E2213–00 | GASKET, TENSIONER CASE<br>EMPAQUE DE CAJA TENSOR | 1 | | | | | |
| 10 | 91312–06020 | BOLT<br>TORNILLO | 2 | | | | | |
| 11 | 1WD–E2251–00 | DAMPER, CHAIN 1<br>AMORTIGUADOR CADENA 1 | 1 | | | | | |
| 12 | 2MS–E2252–00 | DAMPER, CHAIN 2<br>AMORTIGUADOR CADENA 2 | 1 | | | | | |
| 13 | 90110–06161 | BOLT, HEXAGON SOCKET HEAD<br>TORNILLO ALLEN | 2 | | | | | |
| 14 | 1WD–E2256–00 | COVER, CHAIN<br>CUBIERTA DE CADENA | 1 | | | | | |
| 15 | 90110–06161 | BOLT, HEXAGON SOCKET HEAD<br>TORNILLO ALLEN | 2 | | | | | |

## FIG. 5 WATER PUMP — BOMBA DE AGUA

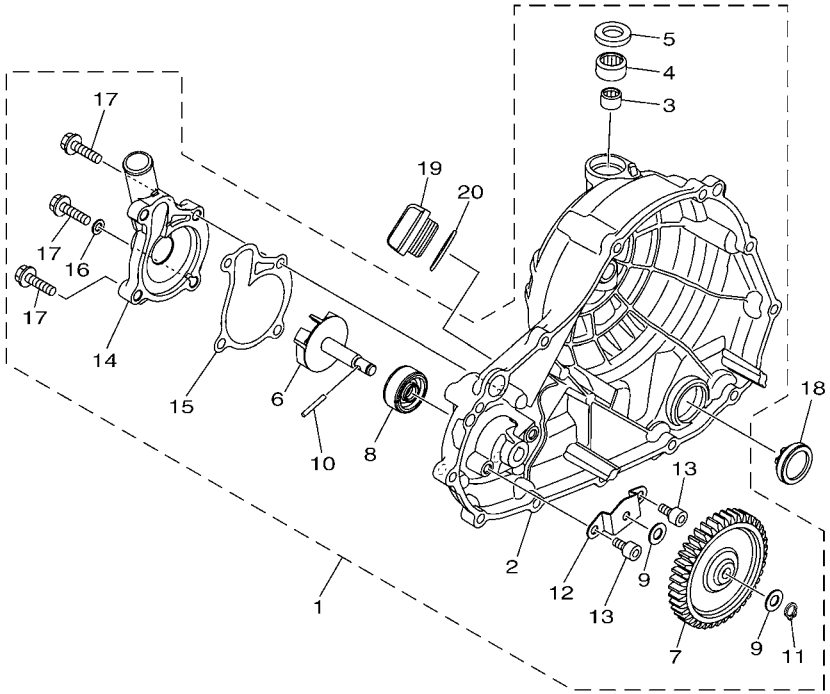

1WD1460-P050

| REF. NO. | PART NO. CODIGO Nº | DESCRIPTION DESCRIPCION | 2YP2 | | | | | REMARKS OBSERVACIONES |
|---|---|---|---|---|---|---|---|---|
| 1 | 1WD–E2420–00 | WATER PUMP ASSY<br>BOMBA DE AGUA COMPLETA | 1 | | | | | |
| 2 | 1WD–E5421–00 | .COVER, CRANKCASE 2<br>.TAPA DE CARTER DERECHA | 1 | | | | | |
| 3 | 93317–11096 | .BEARING<br>.COJINETE | 1 | | | | | |
| 4 | 93315–21570 | .BEARING<br>.COJINETE DE RODILLOS | 1 | | | | | |
| 5 | 93102–15801 | .OIL SEAL<br>.SELLO ACEITE | 1 | | | | | |
| 6 | 1WD–E2450–00 | .IMPELLER SHAFT ASSY<br>.EJE IMPULSOR COMPLETO | 1 | | | | | |
| 7 | 1WD–E2453–00 | .GEAR<br>.ENGRANAJE | 1 | | | | | |
| 8 | 33S–E2223–00 | .SEAL<br>.SELLO | 1 | | | | | |
| 9 | 33S–E2456–00 | .WASHER<br>.ARANDELA | 2 | | | | | |
| 10 | 1WD–E319L–00 | .PIN, STRAIGHT<br>.PASADOR CILINDRICO | 1 | | | | | |
| 11 | 99009–08400 | .CIRCLIP<br>.PRESILLA REDONDA | 1 | | | | | |
| 12 | 1WD–E2681–00 | .PLATE<br>.EMPAQUETADURA | 1 | | | | | |
| 13 | 91312–06010 | .BOLT<br>.TORNILLO | 2 | | | | | |
| 14 | 1WD–E2422–00 | .COVER, HOUSING<br>.CUBIERTA DE CAJA | 1 | | | | | |
| 15 | 1WD–E2428–00 | .GASKET, HOUSING COVER 2<br>.JUNTA, DE CBTA.CAJA 2 | 1 | | | | | |
| 16 | 90430–06014 | .GASKET<br>.JUNTA | 1 | | | | | |
| 17 | 95022–06025 | .BOLT, FLANGE<br>.PERNO, DE BRIDA | 3 | | | | | |
| 18 | 2H7–15361–00 | GAUGE, LEVEL<br>MEDIDOR DE NIVEL | 1 | | | | | |
| 19 | 1WD–E5362–00 | PLUG, OIL LEVEL<br>TAPON DEL NIVEL DE ACEITE | 1 | | | | | |
| 20 | 93210–27807 | O-RING<br>ANILLO O | 1 | | | | | |

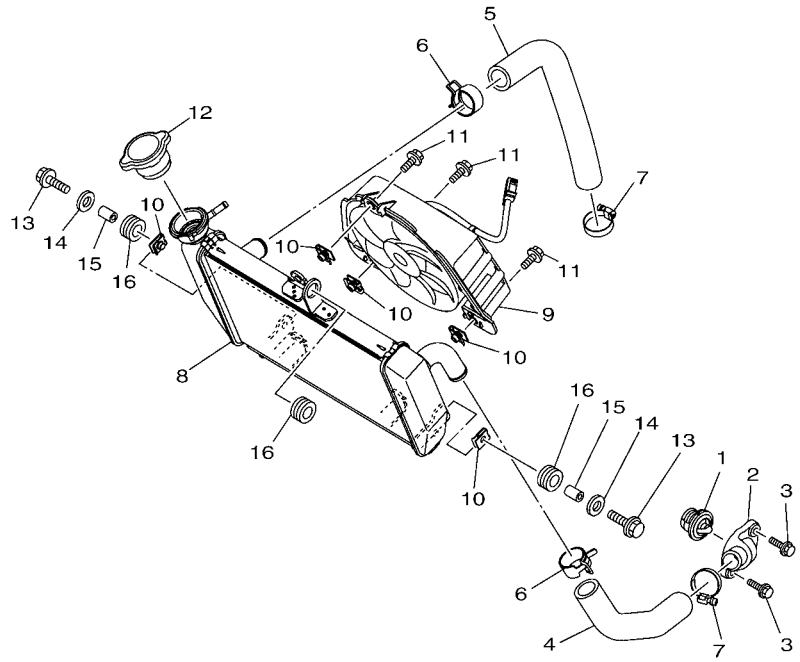

1WD1460-P060

## FIG. 6 RADIATOR & HOSE — RADIADOR & MANGUERA

| REF. NO. | PART NO. CODIGO Nº | DESCRIPTION DESCRIPCION | 2YP2 | | | | | REMARKS OBSERVACIONES |
|---|---|---|---|---|---|---|---|---|
| 1 | 5P0–12411–00 | THERMOSTAT<br>TERMOSTAT | 1 | | | | | |
| 2 | 1WD–E2413–00 | COVER, THERMOSTAT<br>CUBIERTA TERMOSTATO | 1 | | | | | |
| 3 | 95022–06020 | BOLT, FLANGE<br>PERNO, DE BRIDA | 2 | | | | | |
| 4 | 2MS–E2577–00 | HOSE 2<br>MANGUERA 2 | 1 | | | | | |
| 5 | 1WD–E2578–00 | HOSE 3<br>MANGUERA 3 | 1 | | | | | |
| 6 | 90467–250A1 | CLIP<br>PRESILLA | 2 | | | | | |
| 7 | 90450–28001 | HOSE CLAMP ASSY<br>BRIDA, MANGUERA | 2 | | | | | |
| 8 | 1WD–E2461–00 | RADIATOR COMP<br>RADIADOR COMPLETO | 1 | | | | | |
| 9 | 2MS–E2405–00 | BLOWER ASSY<br>COMPRESOR | 1 | | | | | |
| 10 | 1WD–E2671–00 | NUT 1<br>TUERCA 1 | 5 | | | | | |
| 11 | 5YP–E2675–00 | BOLT, BLOWER HOLDING<br>PERNO, SUJECION VENTILADOR | 3 | | | | | |
| 12 | 5ST–E2462–00 | CAP, RADIATOR<br>TAPON, DEL RADIADOR | 1 | | | | | |
| 13 | 95827–06025 | BOLT, FLANGE<br>TORNILLO | 2 | | | | | |
| 14 | 90201–06072 | WASHER, PLATE<br>ARANDELA PLANA | 2 | | | | | |
| 15 | 90387–064W3 | COLLAR<br>ESPACIADOR | 2 | | | | | |
| 16 | 90480–15808 | GROMMET<br>TAPON | 3 | | | | | |

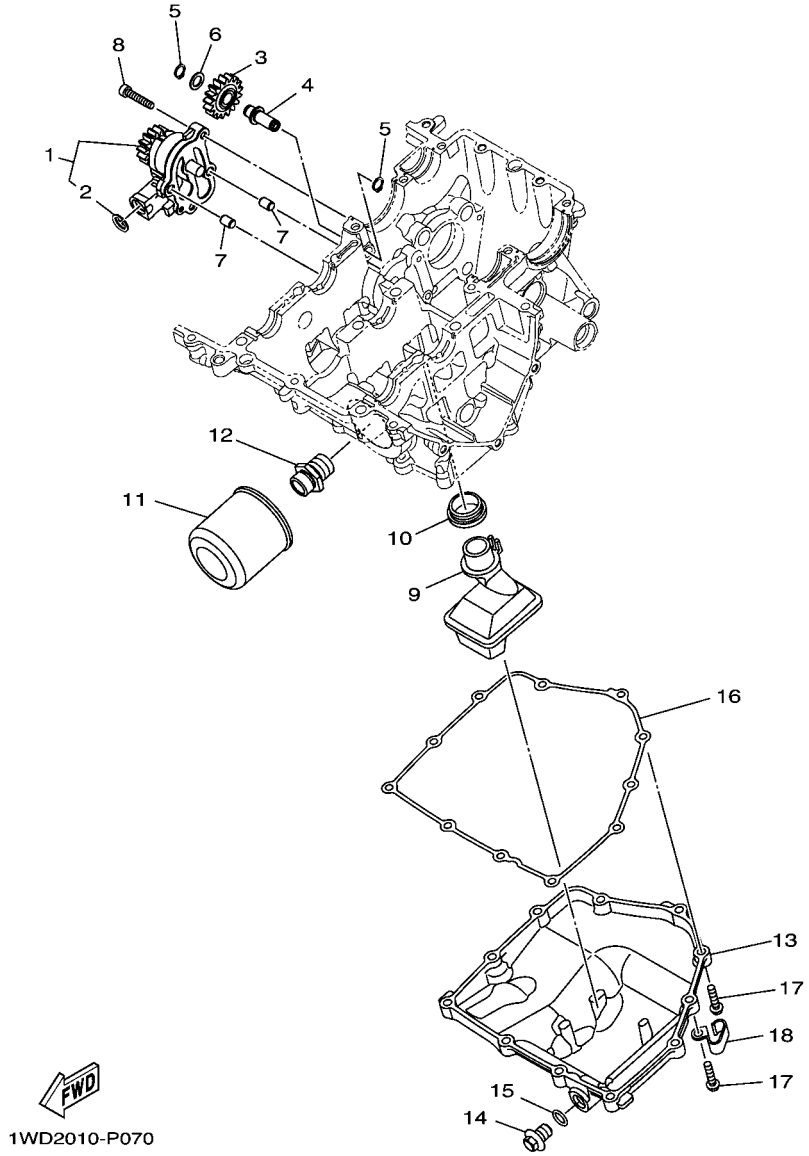


## FIG. 7 OIL PUMP — BOMBA DE ACEITE

| REF. NO. | PART NO. CODIGO Nº | DESCRIPTION DESCRIPCION | 2YP2 | | | | | REMARKS OBSERVACIONES |
|---|---|---|---|---|---|---|---|---|
| 1 | 1WD–E3300–00 | OIL PUMP ASSY<br>BOMBA DE ACEITE COMPLETA | 1 | | | | | |
| 2 | 99009–15500 | .CIRCLIP<br>.PRESILLA REDONDA | 1 | | | | | |
| 3 | 1WD–E3341–00 | GEAR, OIL PUMP IDLE<br>ENGRENAJE NEUTRO DE BOMBA | 1 | | | | | |
| 4 | 1WD–E3342–00 | SHAFT, IDLE GEAR<br>EJE DE ENGRENAJE NEUTRO | 1 | | | | | |
| 5 | 99009–10400 | CIRCLIP<br>PRESILLA REDONDA | 2 | | | | | |
| 6 | 90201–10119 | WASHER, PLATE<br>ARANDELA PLANA | 1 | | | | | |
| 7 | 99530–08012 | PIN, DOWEL<br>PASADOR, DE ESPIGA | 2 | | | | | |
| 8 | 91312–06030 | BOLT<br>TORNILLO | 4 | | | | | |
| 9 | 1WD–E3410–00 | STRAINER HOUSING ASSY<br>CAJA DE FILTRO COMPLETA | 1 | | | | | |
| 10 | 1WD–E3415–00 | SEAL, OIL STRAINER<br>SELLO COLADOR ACEITE | 1 | | | | | |
| 11 | 1WD–E3440–00 | ELEMENT ASSY, OIL CLEANER<br>ELEMENTO FILTRO DE ACEITE | 1 | | | | | |
| 12 | 90401–20008 | BOLT, UNION<br>PERNO DE UNION | 1 | | | | | |
| 13 | 1WD–E3417–00 | COVER, STRAINER<br>TAPA DE FILTRO | 1 | | | | | |
| 14 | 90340–12808 | PLUG, STRAIGHT SCREW<br>TORNILLO, DE DRENAJE | 1 | | | | | |
| 15 | 4YS–E1198–00 | GASKET<br>EMPAQUE | 1 | | | | | |
| 16 | 1WD–E3414–00 | GASKET, STRAINER COVER<br>EMPAQUE DE TAPA FILTRO | 1 | | | | | |
| 17 | 95022–06025 | BOLT, FLANGE<br>PERNO, DE BRIDA | 11 | | | | | |
| 18 | 90462–08810 | CLAMP<br>BRIDA | 1 | | | | | |

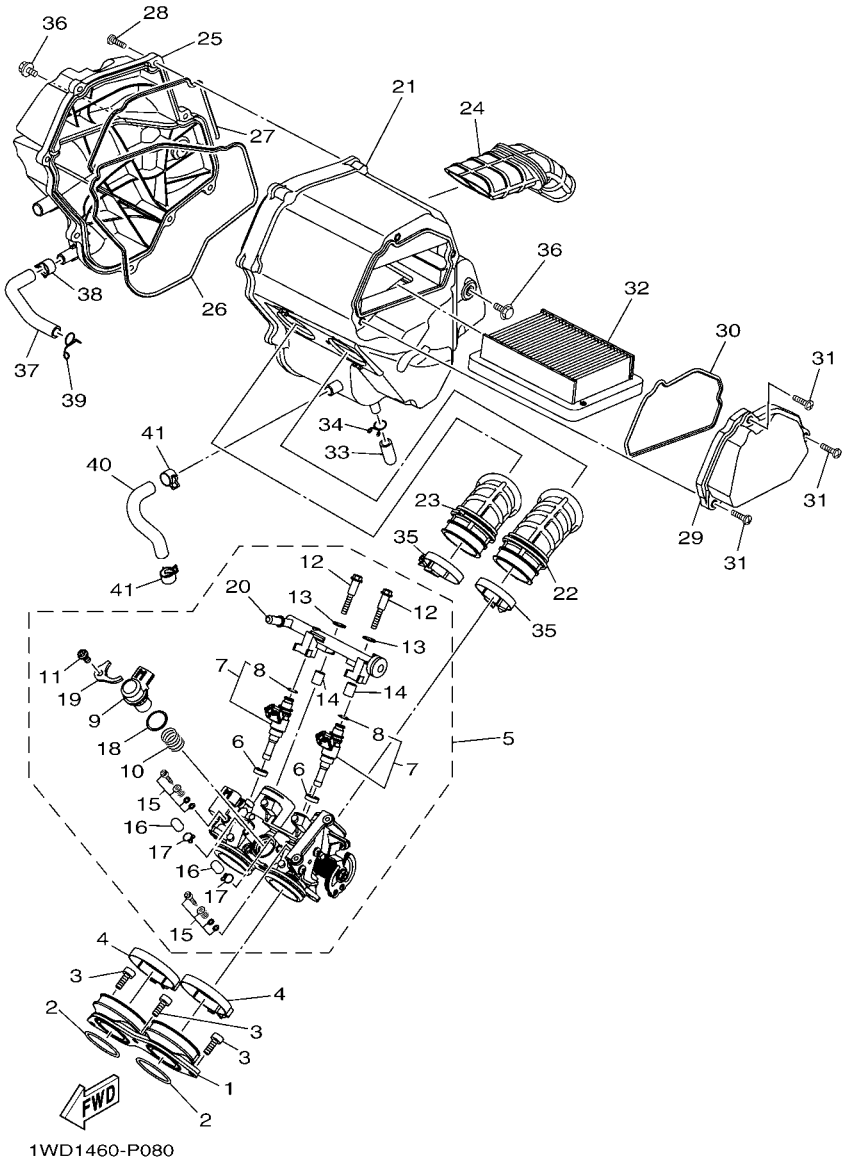


1WD1460-P080

## FIG. 8 INTAKE — ADMISION

| REF. NO. | PART NO. CODIGO Nº | DESCRIPTION DESCRIPCION | 2YP2 | | | | | REMARKS OBSERVACIONES |
|---|---|---|---|---|---|---|---|---|
| 1 | 2MS–E3586–00 | JOINT, CARBURETOR 1<br>TOBERA DE CARBURADOR 1 | 1 | | | | | |
| 2 | 93210–39802 | O-RING<br>ANILLO O | 2 | | | | | |
| 3 | 91312–06016 | BOLT<br>TORNILLO | 3 | | | | | |
| 4 | 90450–55804 | HOSE CLAMP ASSY<br>BRIDA, MANGUERA | 2 | | | | | |
| 5 | 2MS–E3750–10 | THROTTLE BODY ASSY<br>CAJA DE ACELERADOR COMPL. | 1 | | | | | |
| 6 | 1WD–E3556–00 | .GASKET<br>.EMPAQUE | 2 | | | | | |
| 7 | 1WD–E3761–00 | .INJECTOR<br>.INYECTOR | 2 | | | | | |
| 8 | 5PS–14147–00 | ..O-RING<br>..ANILLO O | 1 | | | | | |
| 9 | 1WS–85801–00 | .STEPPING MOTOR<br>.MOTOR | 1 | | | | | |
| 10 | 1WS–14335–00 | .SPRING, PLUNGER<br>.RESORTE DE EMBOLO | 1 | | | | | |
| 11 | 98502–06012 | .SCREW, PAN HEAD<br>.TORNILLO | 1 | | | | | |
| 12 | 1WD–E3573–00 | .BOLT 1<br>.PERNO 1 | 2 | | | | | |
| 13 | 8GL–13571–00 | .WASHER<br>.ARANDELA | 2 | | | | | |
| 14 | 8HG–14534–00 | .COLLAR<br>.COLLAR | 2 | | | | | |
| 15 | 5JW–14104–00 | .AIR SCREW SET<br>.CJTO. TORNNILLO DE AIRE | 2 | | | | | |
| 16 | 895–14169–00 | .CAP<br>.FUNDA | 2 | | | | | |
| 17 | 8A7–14139–00 | .CLIP, PIPE<br>.PRESILLA TUBO | 2 | | | | | |
| 18 | 54P–E416A–00 | .O-RING<br>.ANILLO O | 1 | | | | | |
| 19 | 1WD–E4243–00 | .PLATE<br>.PLACA | 1 | | | | | |
| 20 | 1WD–E3938–00 | .PIPE<br>.TUBO DE ADMISION | 1 | | | | | |
| 21 | 1WD–E4411–00 | CASE, AIR CLEANER 1<br>CAJA FILTRO DEL AIRE 1 | 1 | | | | | |
| 22 | 2MS–E4469–00 | FUNNEL, AIR<br>EMBUDO PARA AIRE | 1 | | | | | |
| 23 | 2MS–E446C–00 | FUNNEL 2<br>EMBUDO 2 | 1 | | | | | |
| 24 | 1WD–E4437–00 | DUCT<br>CONDUCTO | 1 | | | | | |
| 25 | 2MS–E4412–00 | CAP, CLEANER CASE 1<br>TAPA CAJA DEL FILTRO 1 | 1 | | | | | |
| 26 | 1WD–E4452–00 | SEAL<br>SELLO | 1 | | | | | |
| 27 | 1WD–E4457–00 | SEAL<br>SELLO | 1 | | | | | |

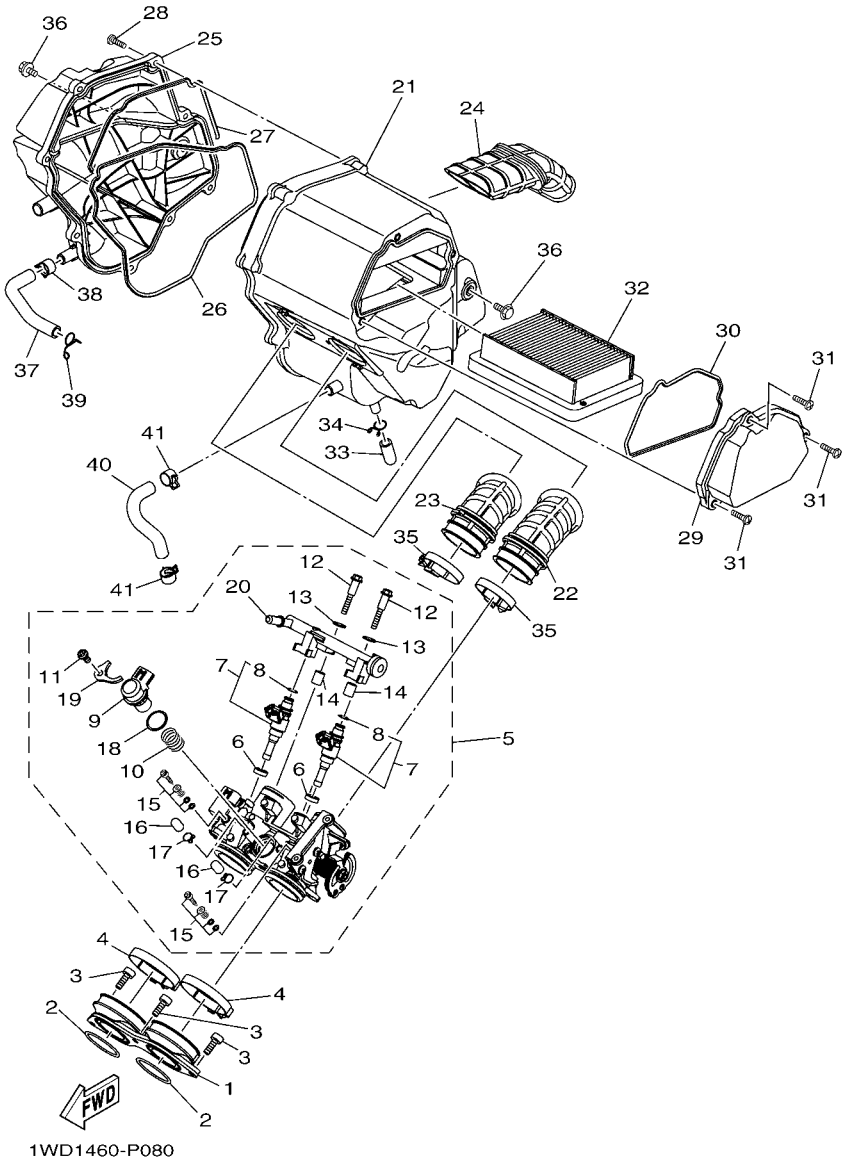


## FIG. 8 INTAKE ADMISION

| REF. NO. | PART NO. CODIGO Nº | DESCRIPTION DESCRIPCION | 2YP2 | | | | | REMARKS OBSERVACIONES |
|---|---|---|---|---|---|---|---|---|
| 28 | 97702–50025 | SCREW, TAPPING<br>TORNILLO ROSCA HEMBRA | 8 | | | | | |
| 29 | 1WD–E4422–00 | CAP, CLEANER CASE 2<br>TAPA CAJA DE FILTRO 2 | 1 | | | | | |
| 30 | 1WD–E4462–00 | SEAL<br>SELLO | 1 | | | | | |
| 31 | 98902–05020 | SCREW, BIND<br>TORNILLO DE LIGAR | 3 | | | | | |
| 32 | 1WD–E4451–00 | ELEMENT, AIR CLEANER<br>ELEMENTO DEL FILTRO DEL AIRE | 1 | | | | | |
| 33 | 52B–E443E–00 | PIPE, DRAIN<br>TUBO, DRENAJE | 1 | | | | | |
| 34 | 90467–110A3 | CLIP<br>PRESILLA | 1 | | | | | |
| 35 | 54P–E3474–00 | BAND<br>BANDA | 2 | | | | | |
| 36 | 95822–06010 | BOLT, FLANGE<br>TORNILLO DE REBORDE | 2 | | | | | |
| 37 | 1WD–E3543–00 | HOSE, AIR<br>TUBO DE AIRE | 1 | | | | | |
| 38 | 90467–13802 | CLIP<br>PRESILLA | 1 | | | | | |
| 39 | 90467–12052 | CLIP<br>PRESILLA | 1 | | | | | |
| 40 | 1WD–E5373–00 | PIPE, BREATHER<br>MANGUELA DE RESPIRADERO | 1 | | | | | |
| 41 | 90467–13802 | CLIP<br>PRESILLA | 2 | | | | | |

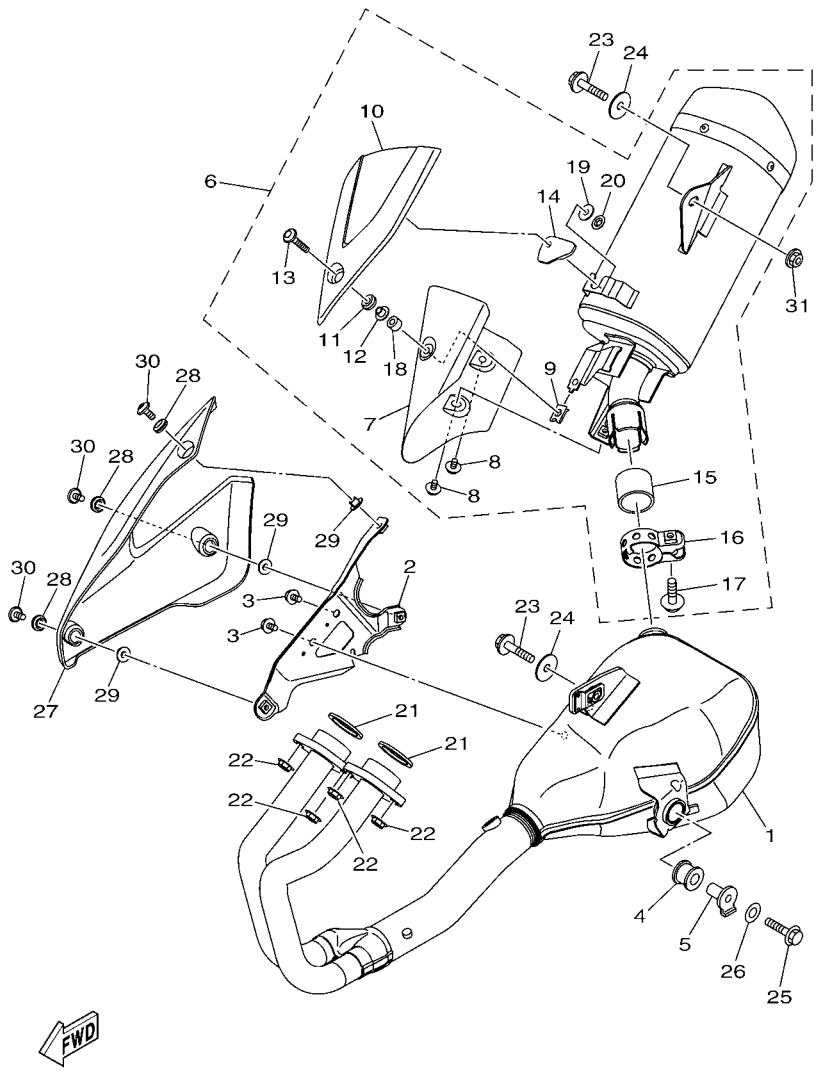


B026431-P090

## FIG. 9 EXHAUST DESCARGA

| REF. NO. | PART NO. CODIGO Nº | DESCRIPTION DESCRIPCION | 2YP2 | | | | | REMARKS OBSERVACIONES |
|---|---|---|---|---|---|---|---|---|
| 1 | 2MS–E4602–00 | EXHAUST PIPE COMP.<br>TUBO DE ESPAPE COMPLETO | 1 | | | | | |
| 2 | 1WD–E473L–00 | BRACKET 3<br>SOPORTE 3 | 1 | | | | | |
| 3 | 95027–06010 | BOLT, FLANGE<br>PERNO, DE BRIDA | 2 | | | | | |
| 4 | 5TP–E4747–00 | DAMPER, MUFFLER<br>AMORTIGUADOR DE SILENCIADOR | 1 | | | | | |
| 5 | 1WD–E4775–00 | NUT<br>TUERCA | 1 | | | | | |
| 6 | 2MS–E4710–00 | MUFFLER ASSY 1<br>TUBO DE ESCAPE COMPLETO 1 | 1 | | | | | |
| 7 | 1WD–E4758–00 | .PROTECTOR, SILENCER<br>.PROTECTOR DE SILENCIADOR | 1 | | | | | |
| 8 | 90111–06802 | .BOLT,HEX. SOCKET BUTTON<br>.TORNILLO | 2 | | | | | |
| 9 | 90183–06818 | .NUT, SPRING<br>.TUERCA DE RESORTE | 1 | | | | | |
| 10 | 1WD–E4728–00 | .PROTECTOR, MUFFLER 2<br>.PROTECTOR DE SILENCIADOR | 1 | | | | | |
| 11 | 90480–12581 | .GROMMET<br>.TAPON | 1 | | | | | |
| 12 | 90387–087L0 | .COLLAR<br>.ESPACIADOR | 1 | | | | | |
| 13 | 90111–06847 | .BOLT,HEX. SOCKET BUTTON<br>.TORNILLO | 1 | | | | | |
| 14 | 1WD–E4763–00 | .SPACER<br>.ESPACIADOR | 1 | | | | | |
| 15 | 54D–E4714–00 | .GASKET, MUFFLER<br>.EMPAQUE DE SILENCIADOR | 1 | | | | | |
| 16 | 1WD–E4715–00 | .BAND, MUFFLER<br>.BANDA DE SILENCIADOR | 1 | | | | | |
| 17 | 95027–08035 | .BOLT, FLANGE<br>.PERNO, DE BRIDA | 1 | | | | | |
| 18 | 90387–068N4 | .COLLAR<br>.ESPACIADOR | 1 | | | | | |
| 19 | 90201–06088 | .WASHER, PLATE<br>.ARANDELA PLANA | 1 | | | | | |
| 20 | 90183–06011 | .NUT, SPRING<br>.TUERCA DE RESORTE | 1 | | | | | |
| 21 | 1WD–E4613–00 | GASKET, EXHAUST PIPE<br>JUNTA, TUBO DE ESCAPE | 2 | | | | | |
| 22 | 95707–08500 | NUT, FLANGE<br>TUERCA DE BRIDA | 4 | | | | | |
| 23 | 90105–088G7 | BOLT, FLANGE<br>TORNILLO | 2 | | | | | |
| 24 | 90201–08612 | WASHER, PLATE<br>ARANDELA PLANA | 2 | | | | | |
| 25 | 95817–08030 | BOLT, FLANGE<br>TORNILLO | 1 | | | | | |
| 26 | 90201–087F0 | WASHER, PLATE<br>ARANDELA PLANA | 1 | | | | | |
| 27 | 1WD–E4628–00 | PROTECTOR, EXHAUST PIPE<br>PROTECTOR DE TUBO DE ESCAPE | 1 | | | | | |

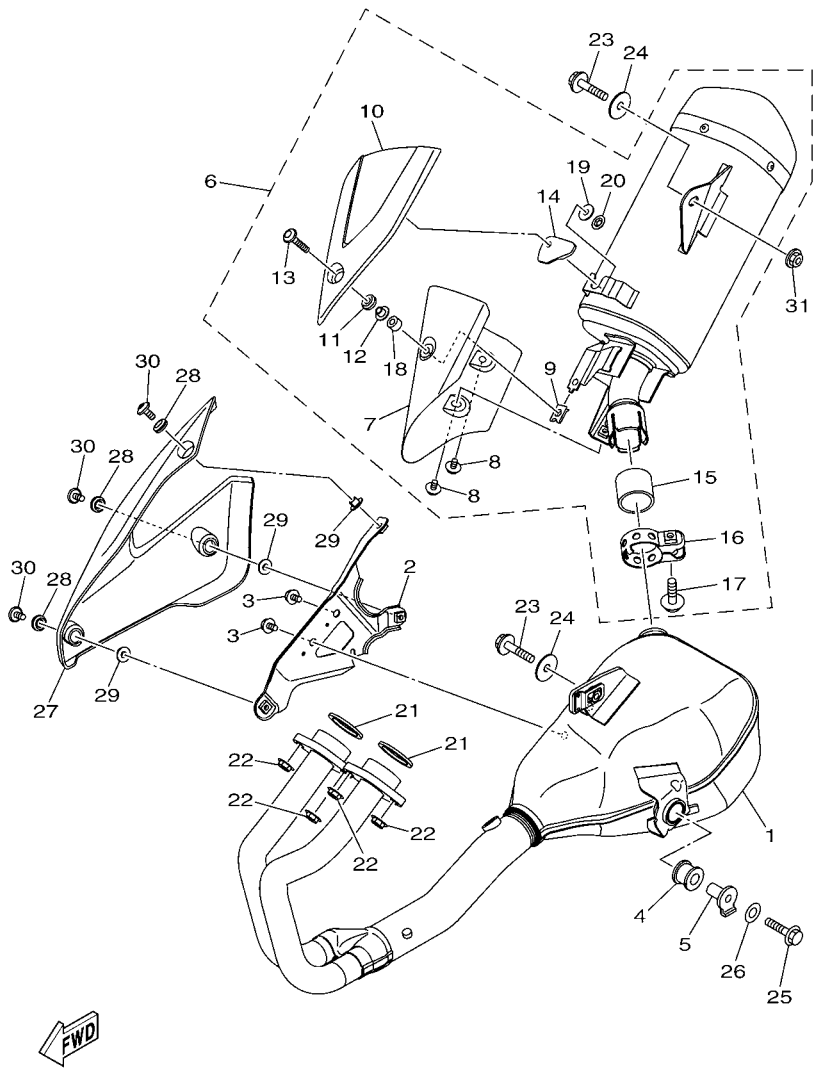


## FIG. 9 EXHAUST DESCARGA

| REF. NO. | PART NO. CODIGO Nº | DESCRIPTION DESCRIPCION | 2YP2 | | | | | REMARKS OBSERVACIONES |
|---|---|---|---|---|---|---|---|---|
| 28 | 90480–12581 | GROMMET<br>TAPON | 3 | | | | | |
| 29 | 90387–087L0 | COLLAR<br>ESPACIADOR | 3 | | | | | |
| 30 | 90111–06152 | BOLT,HEX. SOCKET BUTTON<br>TORNILLO | 3 | | | | | |
| 31 | 95607–08200 | NUT, SELF-LOCKING<br>TUERCA DE AUTO-CIERRE | 1 | | | | | |

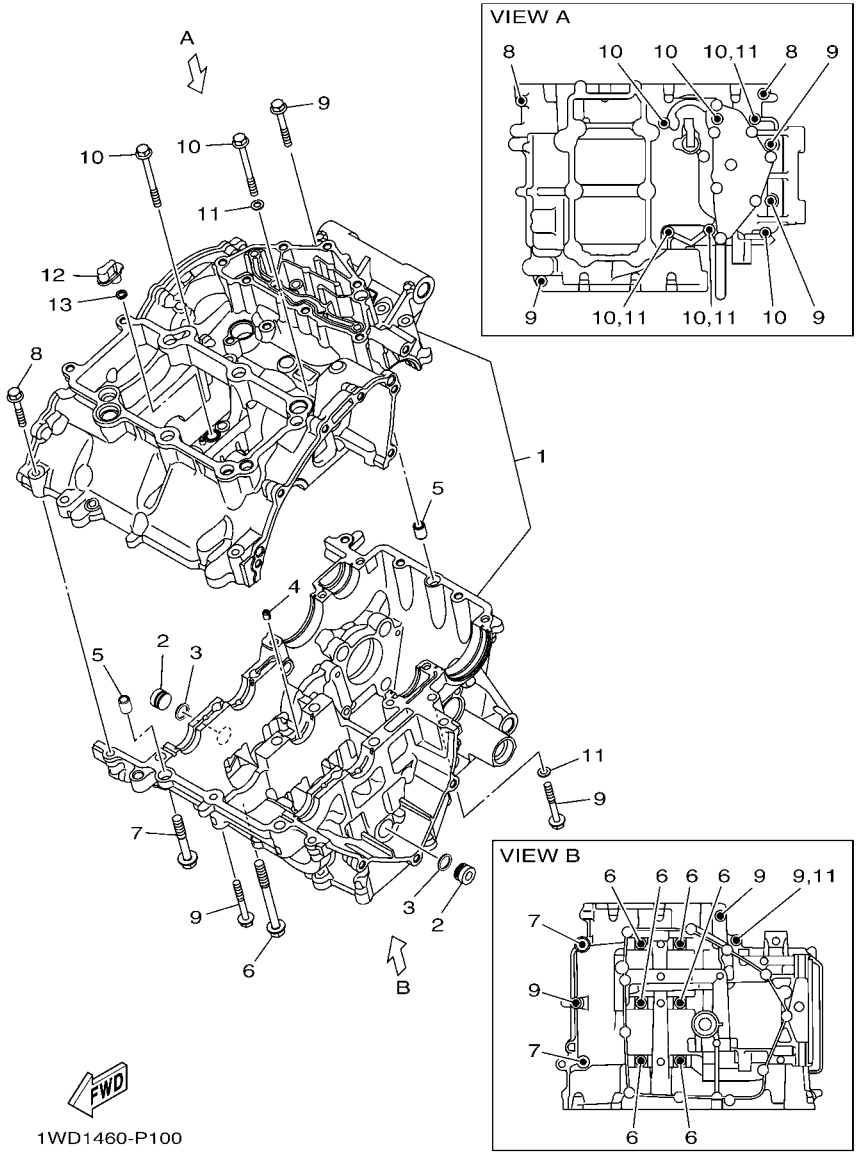


## FIG. 10 CRANKCASE CARTER

| REF. NO. | PART NO. CODIGO Nº | DESCRIPTION DESCRIPCION | 2YP2 | | | | | REMARKS OBSERVACIONES |
|---|---|---|---|---|---|---|---|---|
| 1 | 1WD–E5150–10 | CRANKCASE ASSY<br>CARTER COMPLETO | 1 | | | | | |
| 2 | 90338–16262 | PLUG<br>TAPON | 2 | | | | | |
| 3 | 93210–12803 | O-RING<br>ANILLO O | 2 | | | | | |
| 4 | 1WD–E5148–00 | NOZZLE 2<br>BOQUILLA 2 | 1 | | | | | |
| 5 | 99530–10014 | PIN, DOWEL<br>PASADOR, DE ESPIGA | 2 | | | | | |
| 6 | 90105–088F7 | BOLT, FLANGE<br>TORNILLO | 6 | | | | | |
| 7 | 90105–088G0 | BOLT, FLANGE<br>TORNILLO | 2 | | | | | |
| 8 | 95812–06035 | BOLT, FLANGE<br>TORNILLO DE REBORDE | 2 | | | | | |
| 9 | 95812–06045 | BOLT, FLANGE<br>TORNILLO DE REBORDE | 6 | | | | | |
| 10 | 95812–06065 | BOLT, FLANGE<br>TORNILLO DE REBORDE | 6 | | | | | |
| 11 | 90430–06014 | GASKET<br>JUNTA | 4 | | | | | |
| 12 | 1WD–E5155–00 | NOZZLE 3<br>BOQUILLA 3 | 1 | | | | | |
| 13 | 93210–068F7 | O-RING<br>ANILLO O | 1 | | | | | |

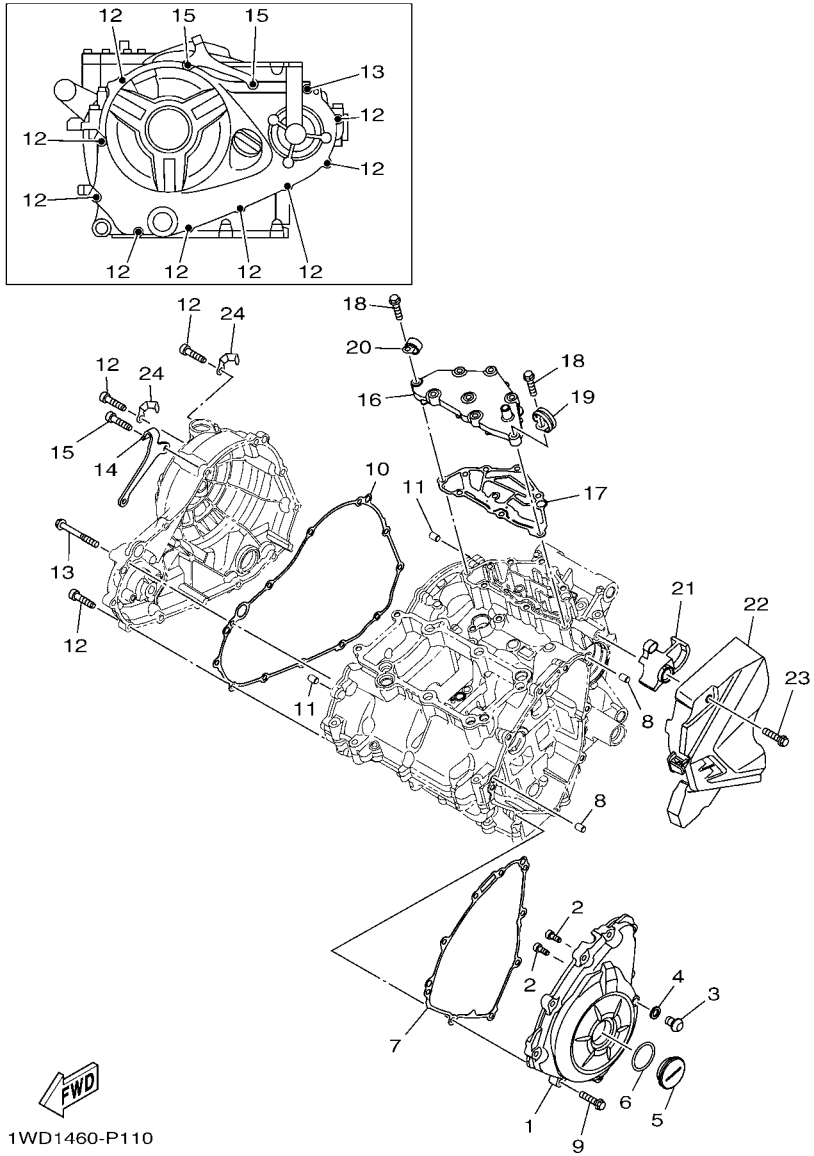


## FIG. 11 CRANKCASE COVER 1 CUBIERTA DE CARTER 1

| REF. NO. | PART NO. CODIGO Nº | DESCRIPTION DESCRIPCION | 2YP2 | | | | | REMARKS OBSERVACIONES |
|---|---|---|---|---|---|---|---|---|
| 1 | 1WD–E5411–00 | COVER, CRANKCASE 1<br>CUBIERTA DE CARTER 1 | 1 | | | | | |
| 2 | 91312–05012 | BOLT<br>TORNILLO | 2 | | | | | |
| 3 | 92014–08012 | BOLT, BUTTON HEAD<br>PERNO | 1 | | | | | |
| 4 | 90430–08143 | GASKET<br>JUNTA | 1 | | | | | |
| 5 | 90340–32819 | PLUG, STRAIGHT SCREW<br>TORNILLO, DE DRENAJE | 1 | | | | | |
| 6 | 93210–32816 | O-RING<br>ANILLO O | 1 | | | | | |
| 7 | 1WD–E5451–00 | GASKET, CRANKCASE COVER 1<br>EMPAQ DE CUBIERTA DE CARTER | 1 | | | | | |
| 8 | 99530–08012 | PIN, DOWEL<br>PASADOR, DE ESPIGA | 2 | | | | | |
| 9 | 95022–06025 | BOLT, FLANGE<br>PERNO, DE BRIDA | 9 | | | | | |
| 10 | 1WD–E5461–00 | GASKET, CRANKCASE COVER 2<br>JUNTA TAPA CARTER DERECHO 2 | 1 | | | | | |
| 11 | 99530–08012 | PIN, DOWEL<br>PASADOR, DE ESPIGA | 2 | | | | | |
| 12 | 95022–06025 | BOLT, FLANGE<br>PERNO, DE BRIDA | 9 | | | | | |
| 13 | 95022–06050 | BOLT, FLANGE<br>PERNO, DE BRIDA | 1 | | | | | |
| 14 | 2MS–E5441–00 | HOLDER, CLUTCH CABLE<br>SOSTEN DE CABLE DE EMBRAGUE | 1 | | | | | |
| 15 | 91312–06025 | BOLT<br>TORNILLO | 2 | | | | | |
| 16 | 1WD–E5413–10 | COVER<br>CUBIERTA | 1 | | | | | |
| 17 | 1WD–E5462–00 | GASKET, CRANKCASE COVER 3<br>EMPAQ CUBIERTA DE CARTER 3 | 1 | | | | | |
| 18 | 95022–06025 | BOLT, FLANGE<br>PERNO, DE BRIDA | 8 | | | | | |
| 19 | 90462–08812 | CLAMP<br>BRIDA | 1 | | | | | |
| 20 | 90462–08806 | CLAMP<br>BRIDA | 1 | | | | | |
| 21 | 1WD–E5377–00 | GUIDE, INLET<br>GUIA DE ENTRADA | 1 | | | | | |
| 22 | 1WD–E5418–00 | COVER, CHAIN CASE<br>CUBIERTA CAJA DE CADENA | 1 | | | | | |
| 23 | 95022–06025 | BOLT, FLANGE<br>PERNO, DE BRIDA | 2 | | | | | |
| 24 | 90462–08225 | CLAMP<br>BRIDA | 2 | | | | | |

## FIG. 12 STARTER CLUTCH EMBRAGUE DEL ARRANQUE

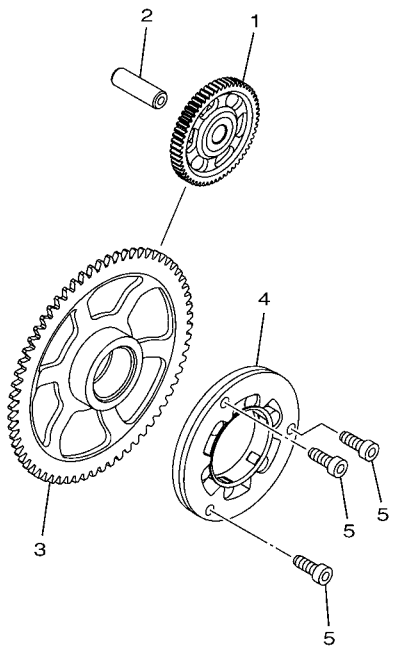

1WD1460-P120

| REF. NO. | PART NO. CODIGO Nº | DESCRIPTION DESCRIPCION | 2YP2 | | | | | REMARKS OBSERVACIONES |
|---|---|---|---|---|---|---|---|---|
| 1 | 1WD–E5514–00 | GEAR 2<br>ENGRANAJE 2 | 1 | | | | | |
| 2 | 44D–E5521–00 | SHAFT 1<br>EJE 1 | 1 | | | | | |
| 3 | 1WD–E5515–00 | GEAR 3<br>ENGRANAJE 3 | 1 | | | | | |
| 4 | 1WD–E5580–00 | STARTER CLUTCH OUTER ASSY<br>ENSAMBLE EXT.EMBRAGUE ARRANQUE | 1 | | | | | |
| 5 | 90110–06161 | BOLT, HEXAGON SOCKET HEAD<br>TORNILLO ALLEN | 3 | | | | | |

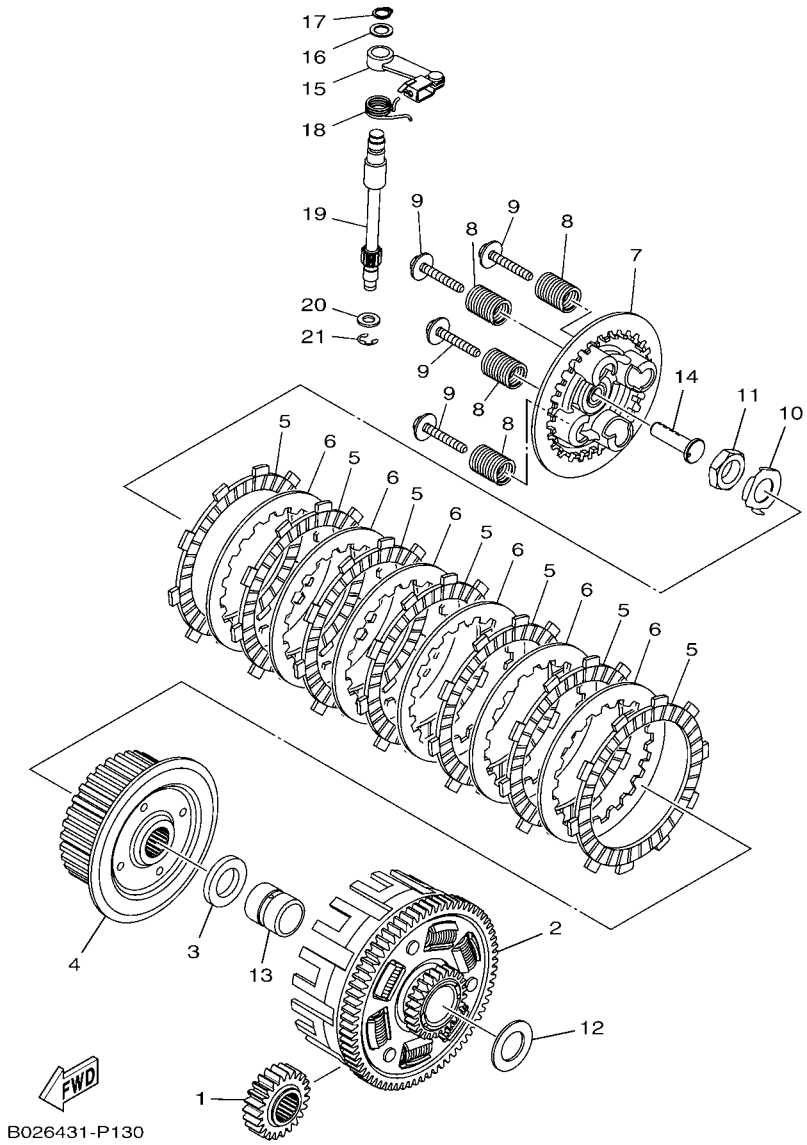


## FIG. 13 CLUTCH EMBRAGUE

| REF. NO. | PART NO. CODIGO Nº | DESCRIPTION DESCRIPCION | 2YP2 | | | | | REMARKS OBSERVACIONES |
|---|---|---|---|---|---|---|---|---|
| 1 | 1WD–E6111–00 | GEAR, PRIMARY DRIVE<br>ENGRANAJE TRACC.PRIMARIA | 1 | | | | | |
| 2 | 2MS–E6150–00 | PRIMARY DRIVEN GEAR COMP.<br>CAMPANA DE EMBRAGUE | 1 | | | | | |
| 3 | 1WD–E6154–00 | PLATE, THRUST 1<br>ARANDELA, DE EMPUJE 1 | 1 | | | | | |
| 4 | 2MS–E6371–00 | BOSS, CLUTCH<br>CUBO, DE EMBRAGUE | 1 | | | | | |
| 5 | 1WD–E6331–00 | PLATE, FRICTION 2<br>DISCO, DE FRICCION 2 | 7 | | | | | |
| 6 | 1WD–E6324–00 | PLATE, CLUTCH 1<br>PLACA DE EMBRAGUE | 6 | | | | | |
| 7 | 2MS–E6350–00 | PRESSURE PLATE ASSY<br>PLACA DE PRESION COMPLETA | 1 | | | | | |
| 8 | 2MS–E6333–10 | SPRING, CLUTCH 1<br>RESORTE DE EMBRAGUE 1 | 4 | | | | | |
| 9 | 1WD–E6337–00 | SCREW, SPRING<br>TORNILLO DE RESORTE | 4 | | | | | |
| 10 | 90215–18800 | WASHER, LOCK<br>ARANDELA DE CIERRE | 1 | | | | | |
| 11 | 90170–18221 | NUT<br>TUERCA | 1 | | | | | |
| 12 | 90201–22013 | WASHER, PLATE<br>ARANDELA PLANA | 1 | | | | | |
| 13 | 1WD–E6181–00 | SPACER 1<br>SEPARADOR | 1 | | | | | |
| 14 | 1WD–E6356–00 | ROD, PUSH 1<br>VARILLA DE EMPUJE 1 | 1 | | | | | |
| 15 | 2MS–E6340–00 | PUSH LEVER ASSY<br>PALANCA DE EMPUJE COMPLETA | 1 | | | | | |
| 16 | 90201–10843 | WASHER, PLATE<br>ARANDELA PLANA | 1 | | | | | |
| 17 | 99009–10400 | CIRCLIP<br>PRESILLA REDONDA | 1 | | | | | |
| 18 | 90508–18136 | SPRING, TORSION<br>RESORTE DE TORSION | 1 | | | | | |
| 19 | 1WD–16382–00 | AXLE, PUSH LEVER<br>EJE DE PALANCA DE EMPUJE | 1 | | | | | |
| 20 | 92902–08600 | WASHER, PLATE<br>ARANDELA | 1 | | | | | |
| 21 | 99002–07600 | CLIP<br>PRESILLA REDONDA | 1 | | | | | |

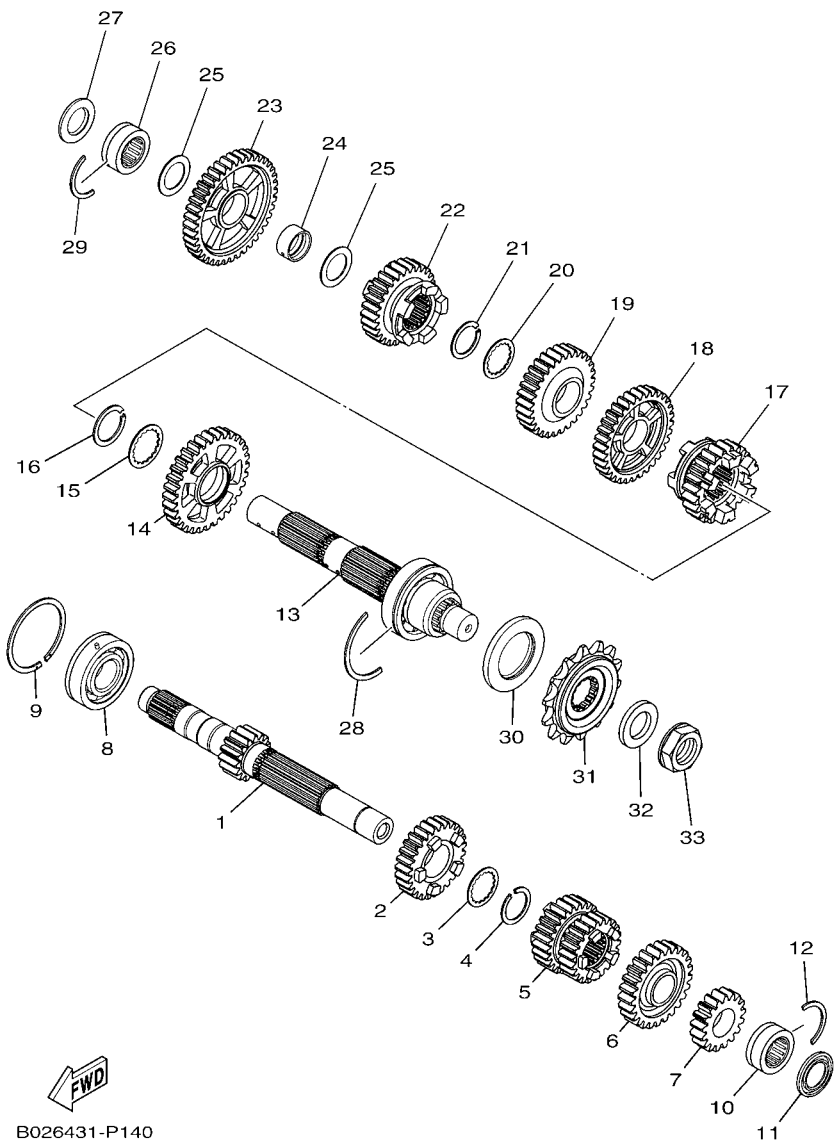


## FIG. 14 TRANSMISSION TRANSMISION

| REF. NO. | PART NO. CODIGO Nº | DESCRIPTION DESCRIPCION | 2YP2 | | | | | REMARKS OBSERVACIONES |
|---|---|---|---|---|---|---|---|---|
| 1 | 2MS–E7411–00 | AXLE, MAIN (14T)<br>EJE PRIMARIO (14T) | 1 | | | | | |
| 2 | 2MS–E7151–00 | GEAR, 5TH PINION (25T)<br>ENGRANAJE PINON DE 5TA (25T) | 1 | | | | | |
| 3 | 90214–22008 | WASHER, CLAW<br>ARANDELA DE POSICION | 1 | | | | | |
| 4 | 93440–24200 | CIRCLIP<br>SEGURO | 1 | | | | | |
| 5 | 2MS–E7131–00 | GEAR, 3RD PINION (23T/23T)<br>ENGRANAJE PINON DE 3RA(23/23T) | 1 | | | | | |
| 6 | 2MS–E7161–00 | GEAR, 6TH PINION (30T)<br>ENGRANAJE PINON 6TA (30T) | 1 | | | | | |
| 7 | 2MS–E7121–00 | GEAR, 2ND PINION (17T)<br>ENGRANAJE PINON DE 2DA (17T) | 1 | | | | | |
| 8 | 93306–255Y9 | BEARING<br>COJINETE | 1 | | | | | |
| 9 | 93440–52009 | CIRCLIP<br>SEGURO | 1 | | | | | |
| 10 | 93311–420Y3 | BEARING<br>COJINETE DE RODILLOS | 1 | | | | | |
| 11 | 93101–20802 | OIL SEAL<br>SELLO ACEITE | 1 | | | | | |
| 12 | 278–17425–00 | CIRCLIP 2<br>PRESILLA REDONDA 2 | 1 | | | | | |
| 13 | 1WD–E7402–00 | DRIVE AXLE ASSY<br>EJE DE TRACCION COMPLETO | 1 | | | | | |
| 14 | 2MS–E7221–00 | GEAR, 2ND WHEEL (31T)<br>ENGRANAJE RUEDA DE 2DA (31T) | 1 | | | | | |
| 15 | 90209–25011 | WASHER<br>ARANDELA DE SEPARACION | 1 | | | | | |
| 16 | 93440–28184 | CIRCLIP<br>SEGURO | 1 | | | | | |
| 17 | 2MS–E7261–00 | GEAR, 6TH WHEEL (24T)<br>ENGRANAJE RUEDA DE 6TA (24T) | 1 | | | | | |
| 18 | 2MS–E7231–00 | GEAR, 3RD WHEEL (31T)<br>ENGRANAJE RUEDA DE 3RA (31T) | 1 | | | | | |
| 19 | 2MS–E7241–00 | GEAR, 4TH WHEEL (25T)<br>ENGRANAJE DE RUEDA 4TA (25T) | 1 | | | | | |
| 20 | 90214–22008 | WASHER, CLAW<br>ARANDELA DE POSICION | 1 | | | | | |
| 21 | 93440–24200 | CIRCLIP<br>SEGURO | 1 | | | | | |
| 22 | 2MS–E7251–00 | GEAR, 5TH WHEEL (23T)<br>ENGRANAJE RUEDA DE 5TA (23T) | 1 | | | | | |
| 23 | 2MS–E7211–00 | GEAR, 1ST WHEEL (35T)<br>ENGRANAJE RUEDA DE 1RA (35T) | 1 | | | | | |
| 24 | 90387–20814 | COLLAR<br>ESPACIADOR | 1 | | | | | |
| 25 | 90201–20276 | WASHER, PLATE (T=1.0)<br>ARANDELA, PLACA (T=1.0) | 2 | | | | | |
| 26 | 93311–420Y3 | BEARING<br>COJINETE DE RODILLOS | 1 | | | | | |
| 27 | 93101–20802 | OIL SEAL<br>SELLO ACEITE | 1 | | | | | |

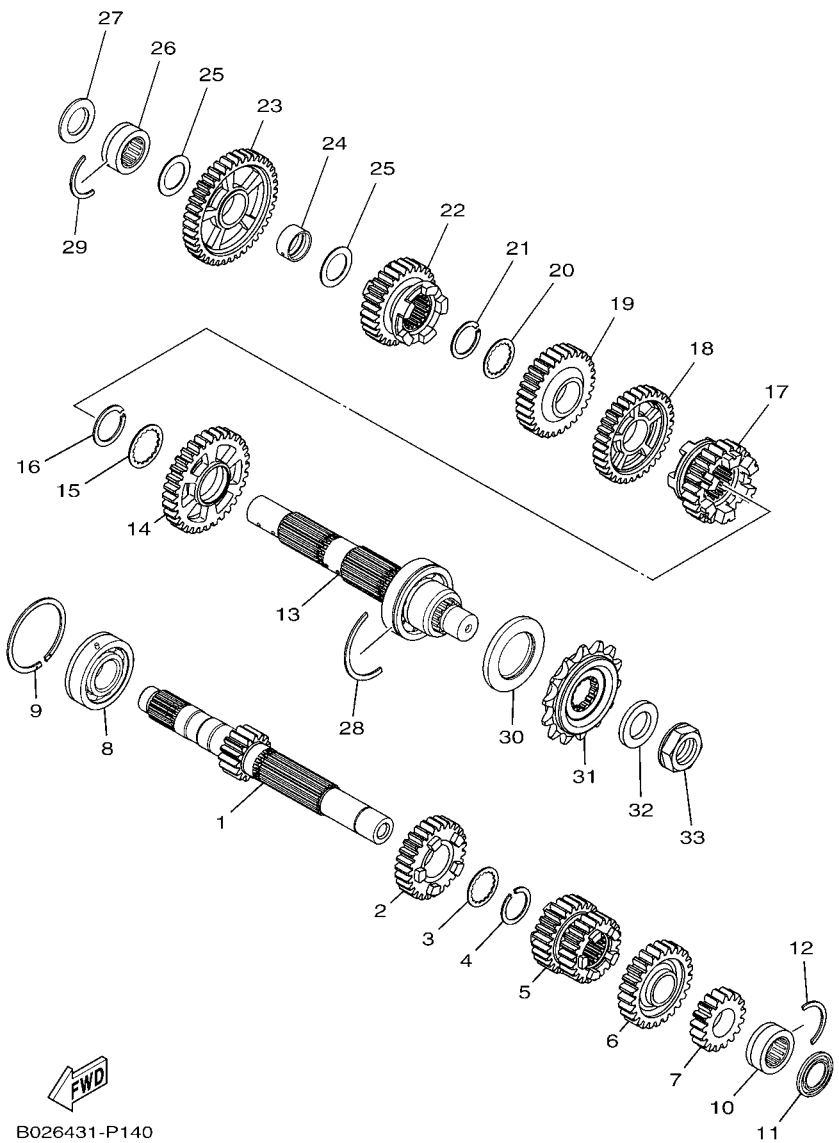


## FIG. 14 TRANSMISSION TRANSMISION

| REF. NO. | PART NO. CODIGO Nº | DESCRIPTION DESCRIPCION | 2YP2 | | | | | REMARKS OBSERVACIONES |
|---|---|---|---|---|---|---|---|---|
| 28 | 1WD–17424–00 | CIRCLIP 1<br>PRESILLA REDONDA 1 | 1 | | | | | |
| 29 | 278–17425–00 | CIRCLIP 2<br>PRESILLA REDONDA 2 | 1 | | | | | |
| 30 | 93102–35803 | OIL SEAL<br>SELLO ACEITE | 1 | | | | | |
| 31 | 1WD–E7460–00 | SPROCKET, DRIVE (14T)<br>CORONA (14T) | 1 | | | | | |
| 32 | 90201–20023 | WASHER, PLATE<br>ARANDELA PLANA | 1 | | | | | |
| 33 | 90179–20013 | NUT<br>TUERCA | 1 | | | | | |

## FIG. 15 SHIFT CAM & FORK — LEVA DE CAMBIO & HORQUILLA

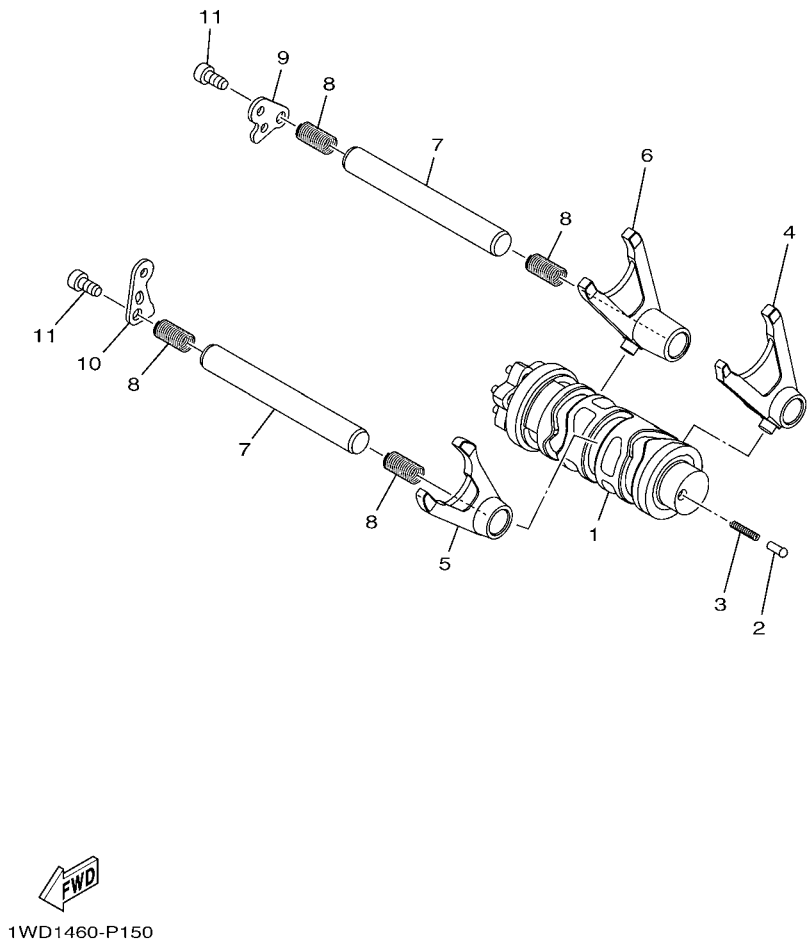


| REF. NO. | PART NO. CODIGO Nº | DESCRIPTION DESCRIPCION | 2YP2 | | | | | REMARKS OBSERVACIONES |
|---|---|---|---|---|---|---|---|---|
| 1 | 1WD–E8540–10 | SHIFT CAM ASSY<br>LEVA DEL CAMBIO COMPLETA | 1 | | | | | |
| 2 | 5TP–E8542–00 | POINT, NEUTRAL<br>PUNTO MUERTO | 1 | | | | | |
| 3 | 90501–06022 | SPRING, COMPRESSION<br>RESORTE DE COMPRESION | 1 | | | | | |
| 4 | 1WD–E8511–00 | FORK, SHIFT 1<br>HORQUILLA DEL CAMBIO 1 | 1 | | | | | |
| 5 | 1WD–E8512–00 | FORK, SHIFT 2<br>HORQUILLA DEL CAMBIO 2 | 1 | | | | | |
| 6 | 1WD–E8513–00 | FORK, SHIFT 3<br>HORQUILLA DEL CAMBIO 3 | 1 | | | | | |
| 7 | 1WD–E8531–00 | BAR, SHIFT FORK GUIDE 1<br>BARRA GUIA HORQ. CAMBIO 1 | 2 | | | | | |
| 8 | 90501–080A2 | SPRING, COMPRESSION<br>RESORTE DE COMPRESION | 4 | | | | | |
| 9 | 1WD–E8536–00 | STOPPER, SHIFT BAR<br>TOPE DE PALANCA SELECTOR | 1 | | | | | |
| 10 | 1WD–E8562–00 | PLATE, STOPPER 2<br>PLACA DE TOPE 2 | 1 | | | | | |
| 11 | 90110–06182 | BOLT, HEXAGON SOCKET HEAD<br>TORNILLO ALLEN | 2 | | | | | |

## FIG. 16 SHIFT SHAFT — EJE DE CAMBIO & PEDAL

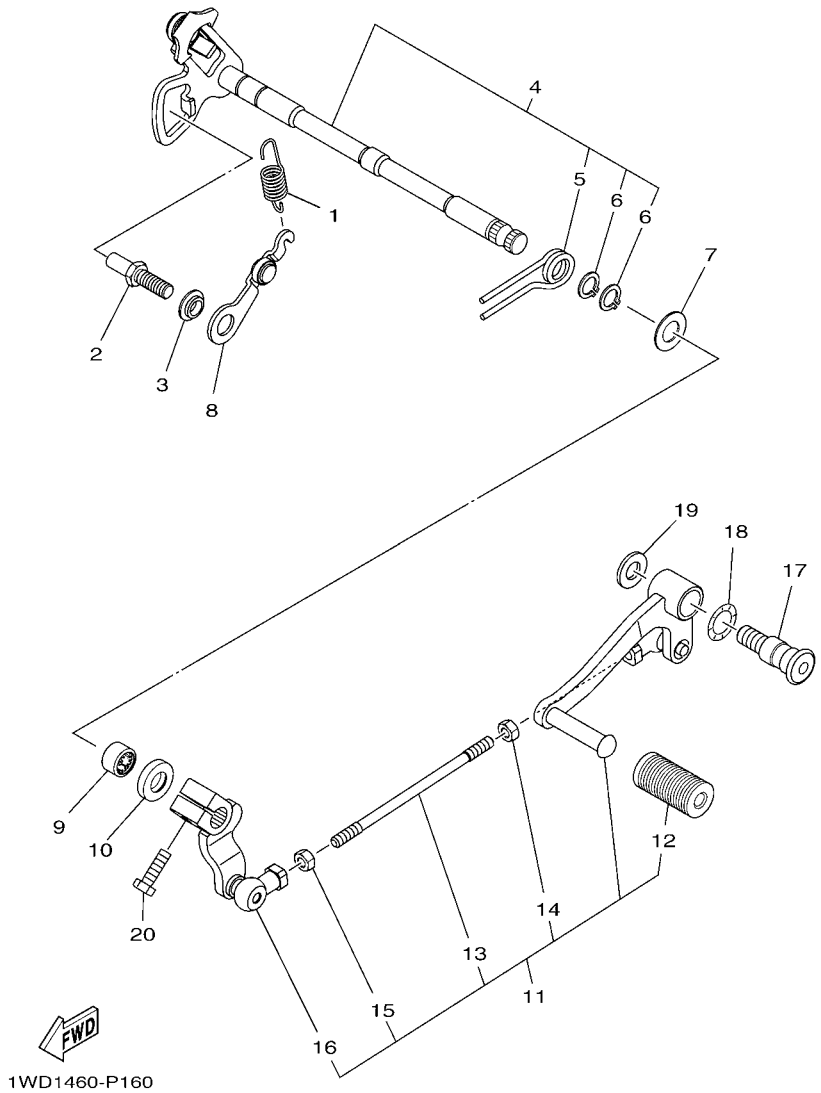


| REF. NO. | PART NO. CODIGO Nº | DESCRIPTION DESCRIPCION | 2YP2 | | | | | REMARKS OBSERVACIONES |
|---|---|---|---|---|---|---|---|---|
| 1 | 1WD–E8337–00 | SPRING<br>RESORTE | 1 | | | | | |
| 2 | 1WD–E8127–00 | STOPPER, SCREW<br>PASADOR DE PALANCA | 1 | | | | | |
| 3 | 1WD–E8175–00 | SPACER<br>ESPACIADOR | 1 | | | | | |
| 4 | 1WD–E8101–00 | SHIFT SHAFT ASSY<br>EJE SELECTOR COMPLETO | 1 | | | | | |
| 5 | 90508–29806 | .SPRING, TORSION<br>.RESORTE DE TORSION | 1 | | | | | |
| 6 | 99009–12400 | .CIRCLIP<br>.PRESILLA REDONDA | 2 | | | | | |
| 7 | 90201–127E1 | WASHER, PLATE<br>ARANDELA PLANA | 1 | | | | | |
| 8 | 1WD–E8140–00 | STOPPER LEVER ASSY<br>PALANCA DE TOPE COMPLETA | 1 | | | | | |
| 9 | 93317–11295 | BEARING<br>COJINETE | 1 | | | | | |
| 10 | 93102–12891 | OIL SEAL<br>SELLO ACEITE | 1 | | | | | |
| 11 | 1WD–E8110–00 | SHIFT PEDAL ASSY<br>PEDAL DE CAMBIO COMPLETO | 1 | | | | | |
| 12 | 1EG–E8113–01 | .COVER, SHIFT PEDAL<br>.FUNDA DEL PEDAL DEL CAMBIO | 1 | | | | | |
| 13 | 1WD–E8115–00 | .ROD, SHIFT<br>.VARILLA DEL CAMBIO | 1 | | | | | |
| 14 | 90170–06023 | .NUT<br>.TUERCA | 1 | | | | | |
| 15 | 95302–06600 | .NUT, HEXAGON<br>.TUERCA | 1 | | | | | |
| 16 | 1WD–E8112–00 | .ARM, SHIFT<br>.BRAZO DEL CAMBIO | 1 | | | | | |
| 17 | 45P–F7261–00 | SHAFT<br>EJE | 1 | | | | | |
| 18 | 90206–14001 | WASHER, WAVE<br>ARANDELA ONDULADA | 1 | | | | | |
| 19 | 90201–10021 | WASHER, PLATE<br>ARANDELA PLANA | 1 | | | | | |
| 20 | 97012–06020 | BOLT<br>PERNO | 1 | | | | | |

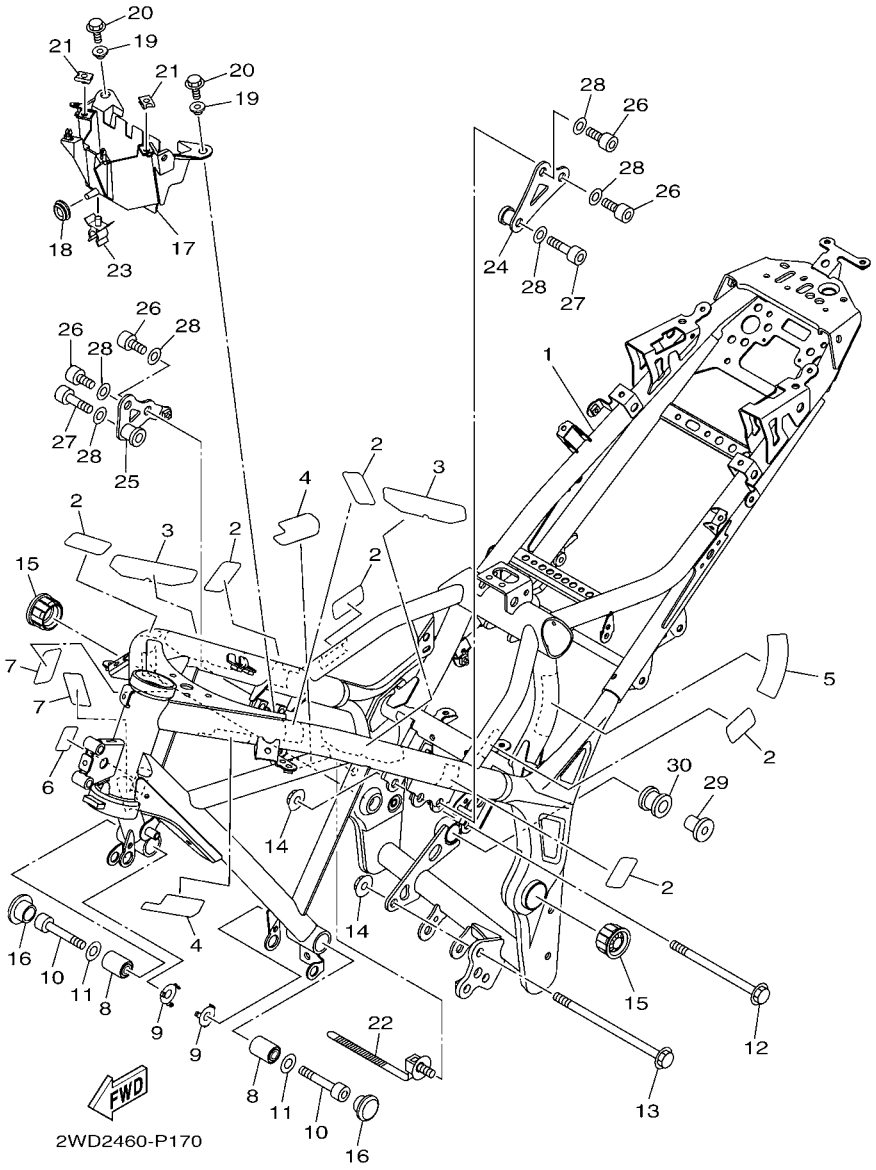


## FIG. 17 FRAME CUADRO

| REF. NO. | PART NO. CODIGO Nº | DESCRIPTION DESCRIPCION | 2YP2 | | | | | REMARKS OBSERVACIONES |
|---|---|---|---|---|---|---|---|---|
| 1 | 1WD–F1110–10 | FRAME COMP.<br>ARMAZON COMPLETO | 1 | | | | | |
| 2 | 1WD–F113B–00 | DAMPER<br>AMORTIGUADOR | 6 | | | | | |
| 3 | 1WD–F112C–00 | DAMPER 2<br>AMORTIGUADOR 2 | 2 | | | | | |
| 4 | 1WD–F117G–00 | PROTECTOR<br>PROTECTOR | 2 | | | | | |
| 5 | 1WD–F1652–00 | PROTECTOR<br>PROTECTOR | 1 | | | | | |
| 6 | 1WD–F193A–00 | PROTECTOR<br>BOBINA CONJUNTO | 1 | | | | | |
| 7 | 5D9–F414G–00 | SEAL<br>SELLO | 2 | | | | | |
| 8 | 1WD–F2123–00 | BUSH 1<br>BUJE 1 | 2 | | | | | |
| 9 | 1WD–F191B–00 | PLATE 1<br>PLACA 1 | 2 | | | | | |
| 10 | 91317–10060 | BOLT<br>PERNO | 2 | | | | | |
| 11 | 92902–10200 | WASHER<br>ARANDELA | 2 | | | | | |
| 12 | 90105–10889 | BOLT, FLANGE<br>TORNILLO | 1 | | | | | |
| 13 | 90105–10891 | BOLT, FLANGE<br>TORNILLO | 1 | | | | | |
| 14 | 90179–10805 | NUT<br>TUERCA | 2 | | | | | |
| 15 | 1WD–F135F–00 | COVER<br>CUBIERTA | 2 | | | | | |
| 16 | 90338–23801 | PLUG<br>TAPON | 2 | | | | | |
| 17 | 1WD–F1171–00 | BOX<br>CAJA | 1 | | | | | |
| 18 | 90480–13398 | GROMMET<br>TAPON | 1 | | | | | |
| 19 | 90387–07819 | COLLAR<br>ESPACIADOR | 2 | | | | | |
| 20 | 95022–06014 | BOLT, FLANGE<br>PERNO, DE BRIDA | 2 | | | | | |
| 21 | 90183–06818 | NUT, SPRING<br>TUERCA DE RESORTE | 2 | | | | | |
| 22 | 90464–30009 | CLAMP<br>BRIDA | 1 | | | | | |
| 23 | 90464–12015 | CLAMP<br>BRIDA | 1 | | | | | |
| 24 | 1WD–F122A–00 | STAY 1<br>APOYO 1 | 1 | | | | | |
| 25 | 1WD–F122B–00 | STAY 2<br>APOYO 2 | 1 | | | | | |
| 26 | 91317–10020 | BOLT<br>PERNO | 4 | | | | | |
| 27 | 91317–10045 | BOLT<br>PERNO | 2 | | | | | |

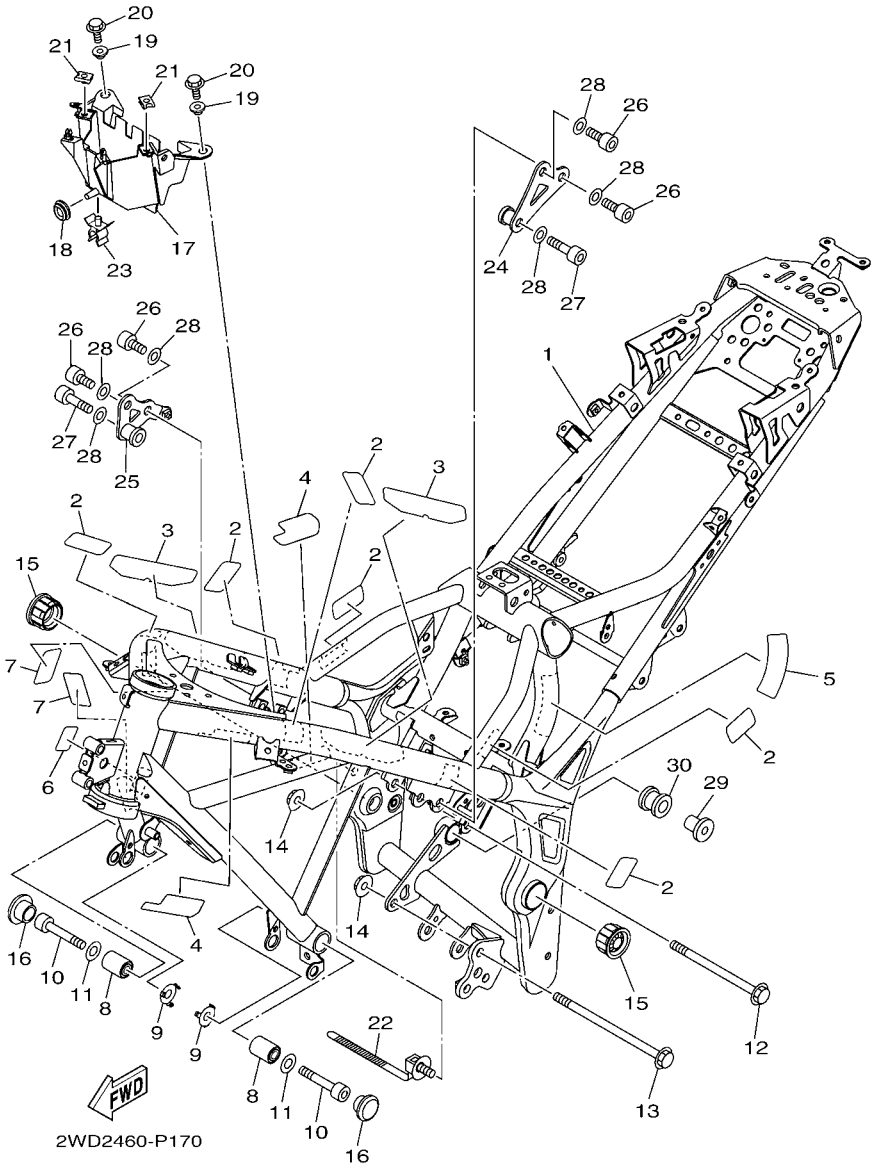


## FIG. 17 FRAME CUADRO

| REF. NO. | PART NO. CODIGO Nº | DESCRIPTION DESCRIPCION | 2YP2 | | | | | REMARKS OBSERVACIONES |
|---|---|---|---|---|---|---|---|---|
| 28 | 92907–10600 | WASHER, PLATE<br>ARANDELA | 6 | | | | | |
| 29 | 90387–08813 | COLLAR<br>ESPACIADOR | 1 | | | | | |
| 30 | 5TP–E4747–00 | DAMPER, MUFFLER<br>AMORTIGUADOR DE SILENCIADOR | 1 | | | | | |

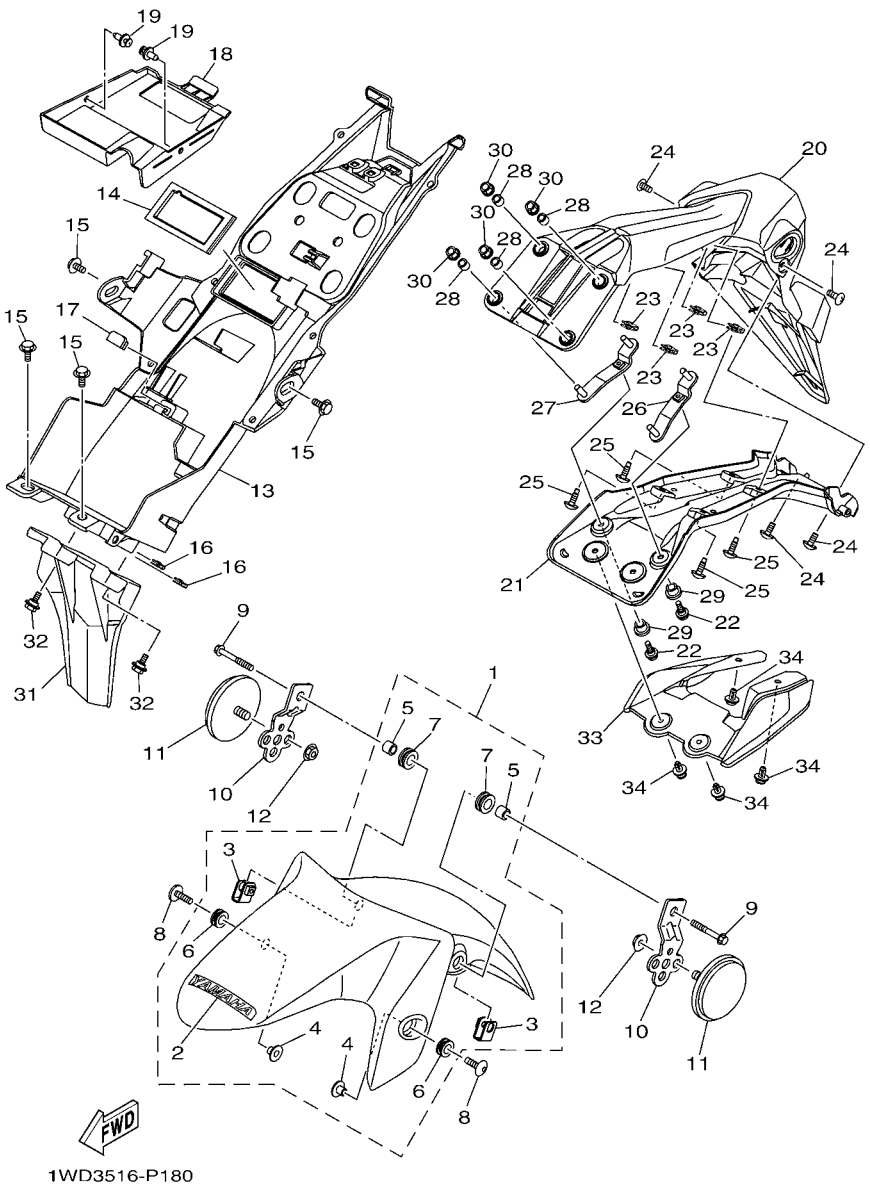


## FIG. 18 FENDER GUARDABARRO

| REF. NO. | PART NO. CODIGO Nº | DESCRIPTION DESCRIPCION | 2YP2 | | | | | REMARKS OBSERVACIONES |
|---|---|---|---|---|---|---|---|---|
| 1 | 1WD–XF151–30–P1 | FENDER, FRONT<br>GUARDABARRO DELANTERO | 1 | | | | | UR FOR DPBMC<br>UR PARA DPBMC |
| | 1WD–XF151–20–P0 | FENDER, FRONT<br>GUARDABARRO DELANTERO | 1 | | | | | UR FOR SMX<br>UR PARA SMX |
| | 1WD–XF151–20–P2 | FENDER, FRONT<br>GUARDABARRO DELANTERO | 1 | | | | | UR FOR VRC1<br>UR PARA VRC1 |
| 2 | 1WD–F153E–00 | .EMBLEM, YAMAHA<br>.EMBLEMA, YAMAHA | 1 | | | | | UR FOR DPBMC<br>UR PARA DPBMC |
| | 1WD–F153E–10 | .EMBLEM, YAMAHA<br>.EMBLEMA, YAMAHA | 1 | | | | | UR FOR SMX<br>UR PARA SMX |
| | 1WD–F153E–20 | .EMBLEM, YAMAHA<br>.EMBLEMA, YAMAHA | 1 | | | | | UR FOR VRC1<br>UR PARA VRC1 |
| 3 | 1WD–F1586–00 | .BRACKET<br>.SOPORTE | 2 | | | | | |
| 4 | 90387–068C5 | .COLLAR<br>.ESPACIADOR | 2 | | | | | |
| 5 | 90387–068L0 | .COLLAR<br>.ESPACIADOR | 2 | | | | | |
| 6 | 90480–12815 | .GROMMET<br>.TAPON | 2 | | | | | |
| 7 | 90480–15809 | .GROMMET<br>.TAPON | 2 | | | | | |
| 8 | 90111–06137 | BOLT,HEX. SOCKET BUTTON<br>TORNILLO | 2 | | | | | |
| 9 | 95027–06045 | BOLT, FLANGE<br>PERNO, DE BRIDA | 2 | | | | | |
| 10 | 1WD–F113J–00 | BRACKET, REFLECTOR 1<br>SOPORTE, REFLECTOR 1 | 2 | | | | | |
| 11 | 4AG–85111–00 | REFLECTOR, FRONT 1<br>REFLECTOR DELANTERA 1 | 2 | | | | | |
| 12 | 95702–06500 | NUT, FLANGE<br>TUERCA DE BRIDA | 2 | | | | | |
| 13 | 1WD–F1611–01 | FENDER, REAR<br>GUARDABARRO TRASERO | 1 | | | | | |
| 14 | 1WD–F1669–00 | SEAL<br>SELLO | 1 | | | | | |
| 15 | 90109–063F1 | BOLT<br>PERNO | 4 | | | | | |
| 16 | 90183–05076 | NUT, SPRING<br>TUERCA DE RESORTE | 2 | | | | | |
| 17 | 1WD–F16A2–00 | SEAL, 2<br>SELLO 2 | 1 | | | | | |
| 18 | 1WD–F163E–00 | COVER, REAR FENDER 2<br>CUBIERTA TRAS GUARDABARRO 2 | 1 | | | | | |
| 19 | 90269–06081 | RIVET<br>REMACHE | 2 | | | | | |
| 20 | 1WD–F1629–01 | GUARD, MUD<br>GUARDABARRO INFERIOR | 1 | | | | | |
| 21 | 1WD–F1617–00 | BRACKET, FENDER<br>SOPORTE DE GUARDABARRO | 1 | | | | | |
| 22 | 90111–05021 | BOLT,HEX. SOCKET BUTTON<br>TORNILLO | 2 | | | | | |
| 23 | 90183–050A7 | NUT, SPRING<br>TUERCA DE RESORTE | 4 | | | | | |

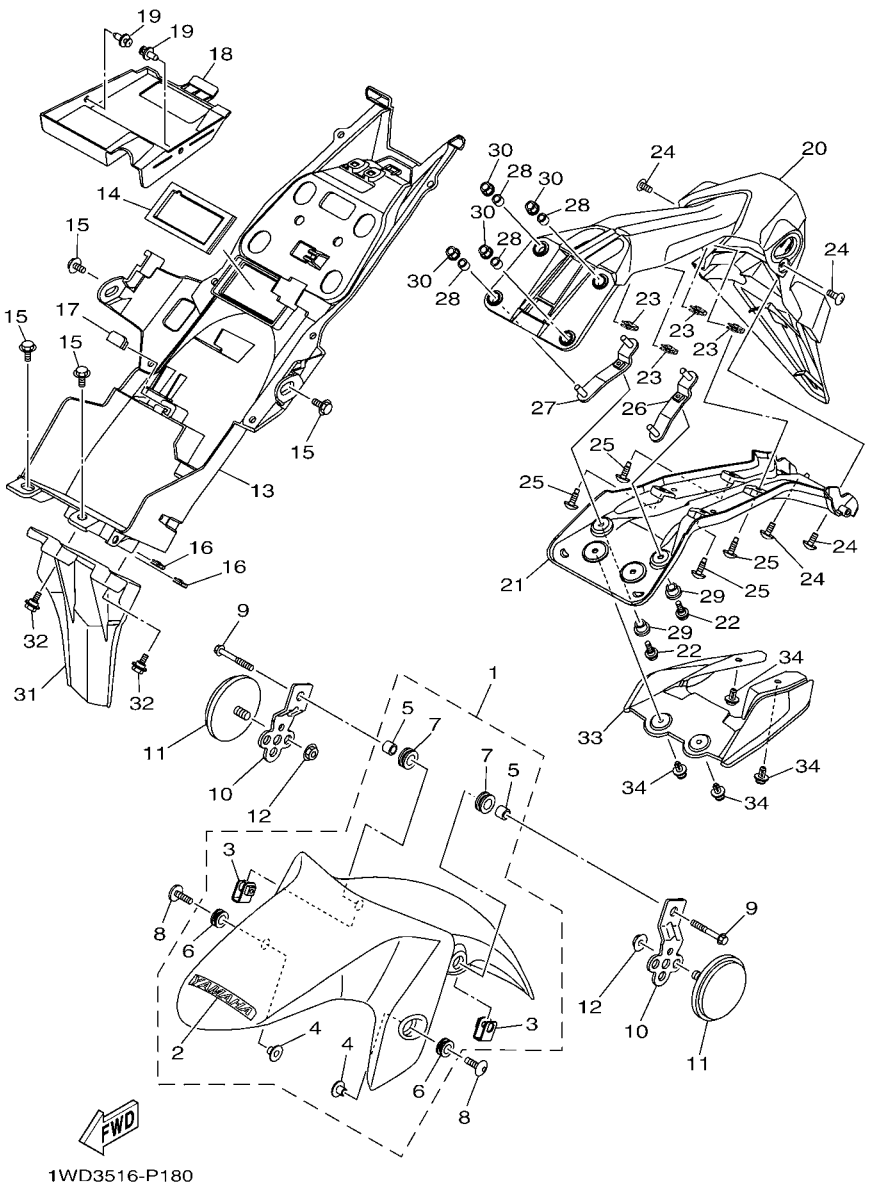


## FIG. 18 FENDER — GUARDABARRO

| REF. NO. | PART NO. CODIGO Nº | DESCRIPTION DESCRIPCION | 2YP2 | | | | | REMARKS OBSERVACIONES |
|---|---|---|---|---|---|---|---|---|
| 24 | 97707–50016 | SCREW, TRUSS HEAD TAPPING<br>TORNILLO | 4 | | | | | |
| 25 | 90111–05018 | BOLT,HEX. SOCKET BUTTON<br>TORNILLO | 4 | | | | | |
| 26 | 1WD–F1688–00 | BRACKET, REAR STAY<br>SOPORTE | 1 | | | | | |
| 27 | 1WD–F1689–00 | BRACKET, REAR STAY 2<br>SOPORTE 2 | 1 | | | | | |
| 28 | 90387–066J9 | COLLAR<br>ESPACIADOR | 4 | | | | | |
| 29 | 90387–068L9 | COLLAR<br>ESPACIADOR | 2 | | | | | |
| 30 | 95602–06200 | NUT, SELF-LOCKING<br>TUERCA DE AUTO-CIERRE | 4 | | | | | |
| 31 | 1WD–F1621–00 | FLAP<br>CHARNELA | 1 | | | | | |
| 32 | 90109–05003 | BOLT<br>PERNO | 2 | | | | | |
| 33 | 1WD–F163A–00 | COVER, REAR FENDER 1<br>CUBIERTA TRAS GUARDABARRO 1 | 1 | | | | | |
| 34 | 90269–06081 | RIVET<br>REMACHE | 4 | | | | | |

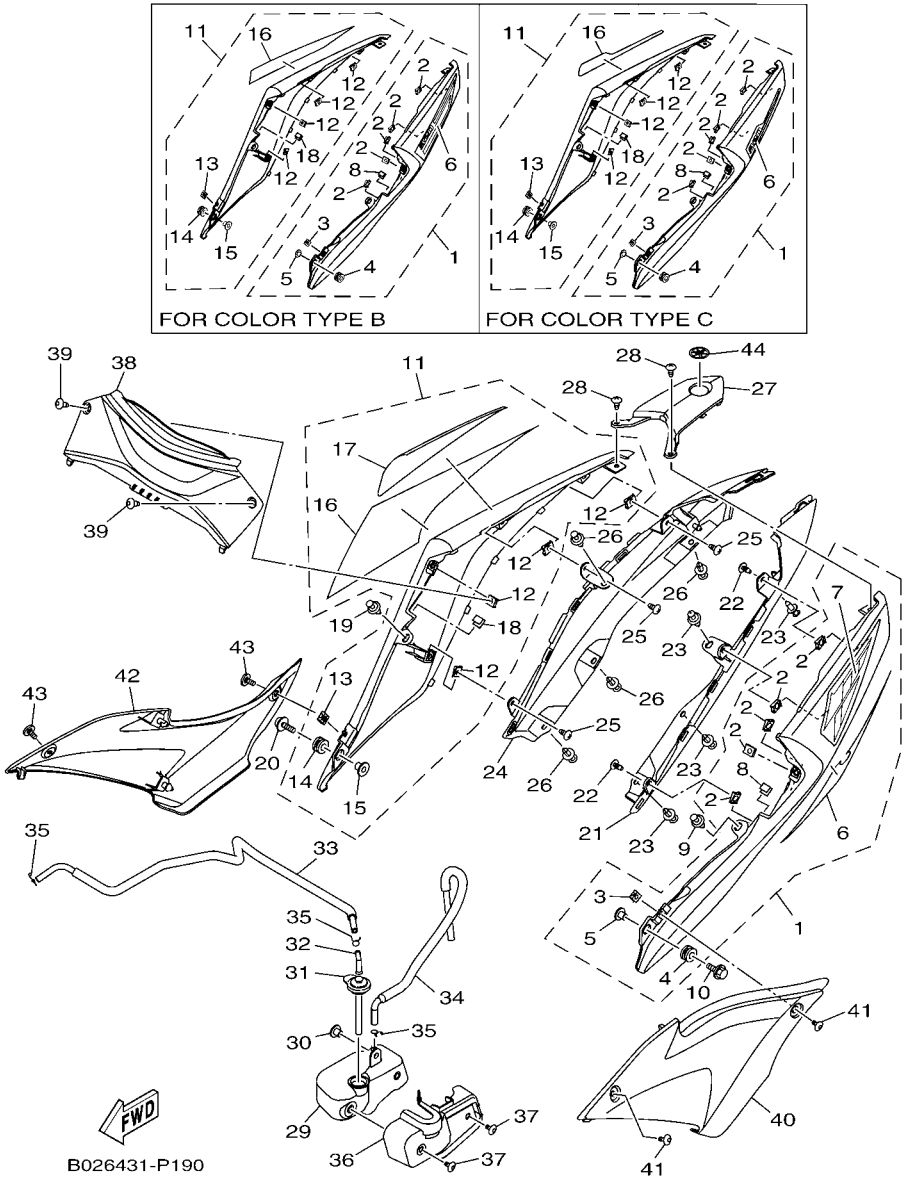


## FIG. 19 SIDE COVER — CUBIERTA LATERAL

| REF. NO. | PART NO. CODIGO Nº | DESCRIPTION DESCRIPCION | 2YP2 | | | | | REMARKS OBSERVACIONES |
|---|---|---|---|---|---|---|---|---|
| 1 | 1WD–XF171–30–P1 | COVER, SIDE 1<br>JUEGO DE GRAFICOS 1 | 1 | | | | | UR FOR DPBMC<br>UR PARA DPBMC |
| | 1WD–XF171–30–P0 | COVER, SIDE 1<br>JUEGO DE GRAFICOS 1 | 1 | | | | | UR FOR SMX<br>UR PARA SMX |
| | 1WD–XF171–30–P2 | COVER, SIDE 1<br>JUEGO DE GRAFICOS 1 | 1 | | | | | UR FOR VRC1<br>UR PARA VRC1 |
| 2 | 90183–05807 | .NUT, SPRING<br>.TUERCA DE RESORTE | 5 | | | | | |
| 3 | 90183–050A7 | .NUT, SPRING<br>.TUERCA DE RESORTE | 1 | | | | | |
| 4 | 90480–12808 | .GROMMET<br>.TAPON | 1 | | | | | |
| 5 | 90387–06899 | .COLLAR<br>.ESPACIADOR | 1 | | | | | |
| 6 | 1WD–F17F1–00 | .GRAPHIC, 1<br>.GRAFICO, 1 | 1 | | | | | UR FOR DPBMC<br>UR PARA DPBMC |
| | 2MS–F17F1–00 | .GRAPHIC, 1<br>.GRAFICO, 1 | 1 | | | | | UR FOR SMX<br>UR PARA SMX |
| | 2MS–F17F1–10 | .GRAPHIC, 1<br>.GRAFICO, 1 | 1 | | | | | UR FOR VRC1<br>UR PARA VRC1 |
| 7 | 1WD–F17F3–00 | .GRAPHIC, 3<br>.GRAFICO, 3 | 1 | | | | | UR FOR DPBMC<br>UR PARA DPBMC |
| 8 | 31B–F8307–00 | .SEAL<br>.SELLO | 1 | | | | | |
| 9 | 90269–06081 | RIVET<br>REMACHE | 1 | | | | | |
| 10 | 90119–06810 | BOLT, WITH WASHER<br>TORNILLO CON ARANDELA | 1 | | | | | |
| 11 | 1WD–XF172–30–P1 | COVER, SIDE 2<br>TAPA LTERAL 2 | 1 | | | | | UR FOR DPBMC<br>UR PARA DPBMC |
| | 1WD–XF172–30–P0 | COVER, SIDE 2<br>TAPA LTERAL 2 | 1 | | | | | UR FOR SMX<br>UR PARA SMX |
| | 1WD–XF172–30–P2 | COVER, SIDE 2<br>TAPA LTERAL 2 | 1 | | | | | UR FOR VRC1<br>UR PARA VRC1 |
| 12 | 90183–05807 | .NUT, SPRING<br>.TUERCA DE RESORTE | 4 | | | | | |
| 13 | 90183–050A7 | .NUT, SPRING<br>.TUERCA DE RESORTE | 1 | | | | | |
| 14 | 90480–12808 | .GROMMET<br>.TAPON | 1 | | | | | |
| 15 | 90387–06899 | .COLLAR<br>.ESPACIADOR | 1 | | | | | |
| 16 | 1WD–F17F2–00 | .GRAPHIC, 2<br>.GRAFICO, 2 | 1 | | | | | UR FOR DPBMC<br>UR PARA DPBMC |
| | 2MS–F17F2–00 | .GRAPHIC, 2<br>.GRAFICO, 2 | 1 | | | | | UR FOR SMX<br>UR PARA SMX |
| | 2MS–F17F2–10 | .GRAPHIC, 2<br>.GRAFICO, 2 | 1 | | | | | UR FOR VRC1<br>UR PARA VRC1 |
| 17 | 1WD–F17F4–00 | .GRAPHIC, 4<br>.GRAFICO, 4 | 1 | | | | | UR FOR DPBMC<br>UR PARA DPBMC |
| 18 | 31B–F8307–00 | .SEAL<br>.SELLO | 1 | | | | | |
| 19 | 90269–06081 | RIVET<br>REMACHE | 1 | | | | | |

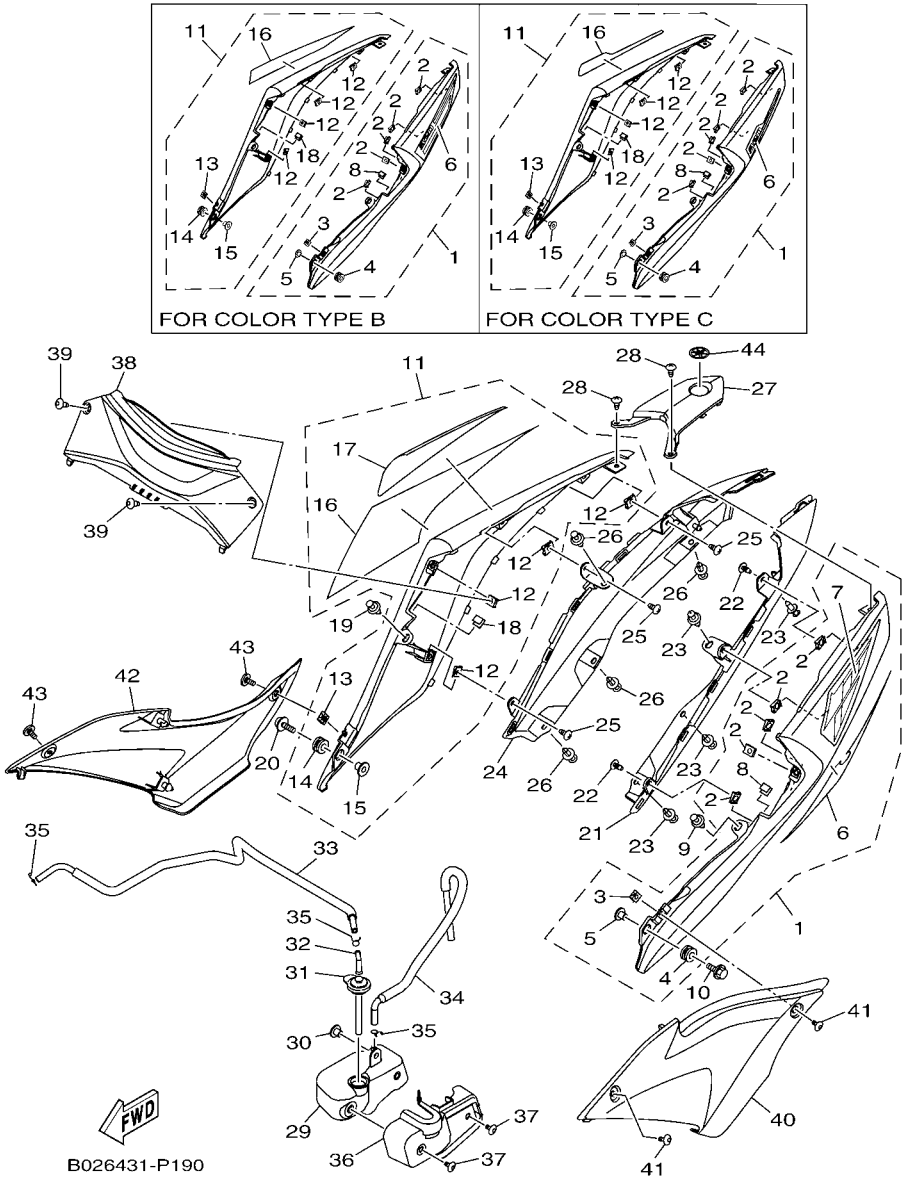


## FIG. 19 SIDE COVER — CUBIERTA LATERAL

| REF. NO. | PART NO. CODIGO Nº | DESCRIPTION DESCRIPCION | 2YP2 | | | | | REMARKS OBSERVACIONES |
|---|---|---|---|---|---|---|---|---|
| 20 | 90119–06810 | BOLT, WITH WASHER<br>TORNILLO CON ARANDELA | 1 | | | | | |
| 21 | 1WD–F171L–00 | MOLE, SIDE COVER 1<br>MUELLE , CUBIERTA LATERAL 1 | 1 | | | | | |
| 22 | 97707–50016 | SCREW, TRUSS HEAD TAPPING<br>TORNILLO | 2 | | | | | |
| 23 | 90269–06081 | RIVET<br>REMACHE | 4 | | | | | |
| 24 | 1WD–F171M–00 | MOLE, SIDE COVER 2<br>MUELLE, CUBIERTA LATERAL 2 | 1 | | | | | |
| 25 | 97707–50016 | SCREW, TRUSS HEAD TAPPING<br>TORNILLO | 3 | | | | | |
| 26 | 90269–06081 | RIVET<br>REMACHE | 4 | | | | | |
| 27 | 1WD–F171N–00 | MOLE, SIDE COVER 3<br>MUELLE, CUBIERTA LATERAL 3 | 1 | | | | | |
| 28 | 97707–50016 | SCREW, TRUSS HEAD TAPPING<br>TORNILLO | 2 | | | | | |
| 29 | 1WD–F1871–00 | TANK, RECOVERY<br>TANQUE DE RECUPERACION | 1 | | | | | |
| 30 | 90387–06857 | COLLAR<br>ESPACIADOR | 1 | | | | | |
| 31 | 1WD–F1875–00 | CAP<br>TAPA | 1 | | | | | |
| 32 | 3C1–F1828–00 | ELBOW<br>CODO | 1 | | | | | |
| 33 | 1WD–F1816–00 | PIPE 1<br>TUBO 1 | 1 | | | | | |
| 34 | 1WD–F1817–00 | PIPE 2<br>TUBO 2 | 1 | | | | | |
| 35 | 90467–08003 | CLIP<br>PRESILLA | 3 | | | | | |
| 36 | 1WD–F172W–00 | COVER<br>CUBIERTA | 1 | | | | | |
| 37 | 90111–05003 | BOLT,HEX. SOCKET BUTTON<br>TORNILLO | 2 | | | | | |
| 38 | 1WD–F1731–00–P1 | COVER, SIDE 3<br>TAPA LATERAL 3 | 1 | | | | | UR FOR DPBMC<br>UR PARA DPBMC |
| | 1WD–F1731–00–P0 | COVER, SIDE 3<br>TAPA LATERAL 3 | 1 | | | | | UR FOR SMX<br>UR PARA SMX |
| | 1WD–F1731–00–P2 | COVER, SIDE 3<br>TAPA LATERAL 3 | 1 | | | | | UR FOR VRC1<br>UR PARA VRC1 |
| 39 | 90160–05810 | SCREW, ROUND TAPPING<br>TORNILLO REDONDO ROSCA HEMBRA | 2 | | | | | |
| 40 | 1WD–F171E–00 | COVER, SIDE 5<br>CUBIERTA LATERAL 5 | 1 | | | | | |
| 41 | 90111–05003 | BOLT,HEX. SOCKET BUTTON<br>TORNILLO | 2 | | | | | |
| 42 | 1WD–F171X–00 | COVER, SIDE 6<br>CUBIERTA LATERAL 6 | 1 | | | | | |
| 43 | 90111–05003 | BOLT,HEX. SOCKET BUTTON<br>TORNILLO | 2 | | | | | |
| 44 | 1PA–F836B–00 | TUNING FORK MARK<br>MARCA | 1 | | | | | |

## FIG. 20 REAR ARM & SUSPENSION BRAZO TRASERO & SUSPENSION

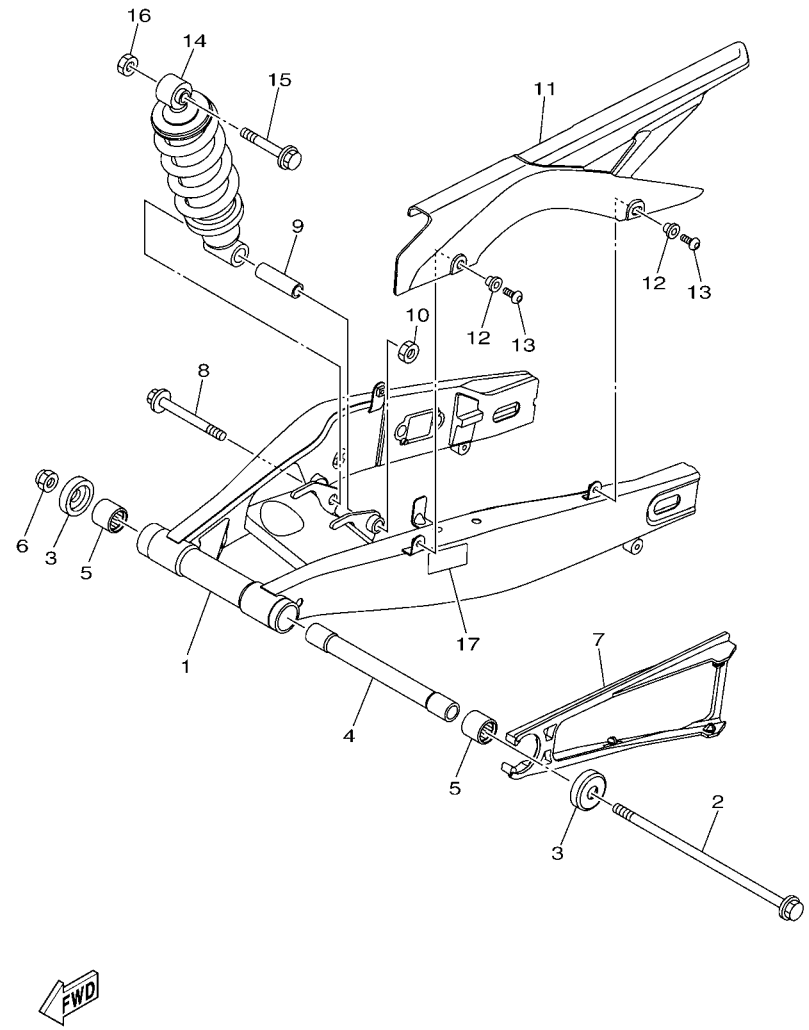


| REF. NO. | PART NO. CODIGO Nº | DESCRIPTION DESCRIPCION | 2YP2 | | | | | REMARKS OBSERVACIONES |
|---|---|---|---|---|---|---|---|---|
| 1 | 1WD–F2110–00 | REAR ARM COMP.<br>BRAZO TRASERO COMPLETO | 1 | | | | | |
| 2 | 1WD–22141–00 | SHAFT, PIVOT<br>EJE DEL BARCULANTE | 1 | | | | | |
| 3 | 1WD–F2129–00 | COVER, THRUST 2<br>TAPA DE EMPUJE 2 | 2 | | | | | |
| 4 | 1WD–F2184–00 | BUSH<br>BUJE | 1 | | | | | |
| 5 | 93320–32403 | BEARING<br>COJINETE | 2 | | | | | |
| 6 | 95602–14200 | NUT, SELF-LOCKING<br>TUERCA DE AUTO-CIERRE | 1 | | | | | |
| 7 | 1WD–F2151–00 | SEAL, GUARD<br>SELLO DE GUARDA | 1 | | | | | |
| 8 | 90105–12309 | BOLT, FLANGE<br>TORNILLO | 1 | | | | | |
| 9 | 1WD–F248B–00 | COLLAR, ROD 1<br>COLLAR,VARILLA 1 | 1 | | | | | |
| 10 | 95602–12100 | NUT, U<br>TUERCA U | 1 | | | | | |
| 11 | 1WD–F2311–00 | CASE, CHAIN<br>CABRECADENA | 1 | | | | | |
| 12 | 90387–06242 | COLLAR<br>ESPACIADOR | 2 | | | | | |
| 13 | 90111–06119 | BOLT,HEX. SOCKET BUTTON<br>TORNILLO | 2 | | | | | |
| 14 | 1WD–F2210–00 | SHOCK ABSORBER ASSY, REAR<br>AMORTIGUADOR TRASERO COMPLETO | 1 | | | | | |
| 15 | 90105–12093 | BOLT, FLANGE<br>TORNILLO | 1 | | | | | |
| 16 | 95602–12100 | NUT, U<br>TUERCA U | 1 | | | | | |
| 17 | 2MS–F1668–00 | LABEL, TIRE<br>ETIQUETA DE FRANJA | 1 | | | | | |

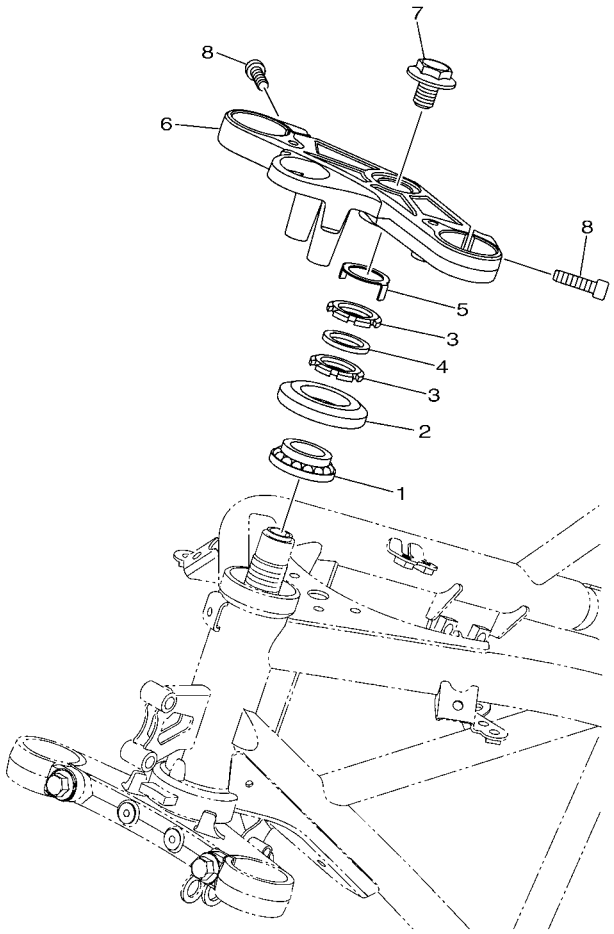

1WD1460-P210

## FIG. 21 STEERING DIRECCION

| REF. NO. | PART NO. CODIGO Nº | DESCRIPTION DESCRIPCION | 2YP2 | | | | | REMARKS OBSERVACIONES |
|---|---|---|---|---|---|---|---|---|
| 1 | 93399–999Y3 | BEARING<br>COJINETE | 1 | | | | | |
| 2 | 5BP–F3416–00 | COVER, BALL RACE 2<br>CUBIERTA DE BASE DE BOLA 2 | 1 | | | | | |
| 3 | 90179–25615 | NUT<br>TUERCA | 2 | | | | | |
| 4 | 90202–26142 | WASHER, PLATE<br>ARANDELA DE PLANA | 1 | | | | | |
| 5 | 5BP–F3418–00 | WASHER, SPECIAL<br>ARANDELA ESPECIAL | 1 | | | | | |
| 6 | 1WD–F3435–00 | CROWN, HANDLE<br>PLATINA SUPERIOR | 1 | | | | | |
| 7 | 90105–14102 | BOLT, FLANGE<br>TORNILLO | 1 | | | | | |
| 8 | 91317–08030 | BOLT<br>PERNO | 2 | | | | | |

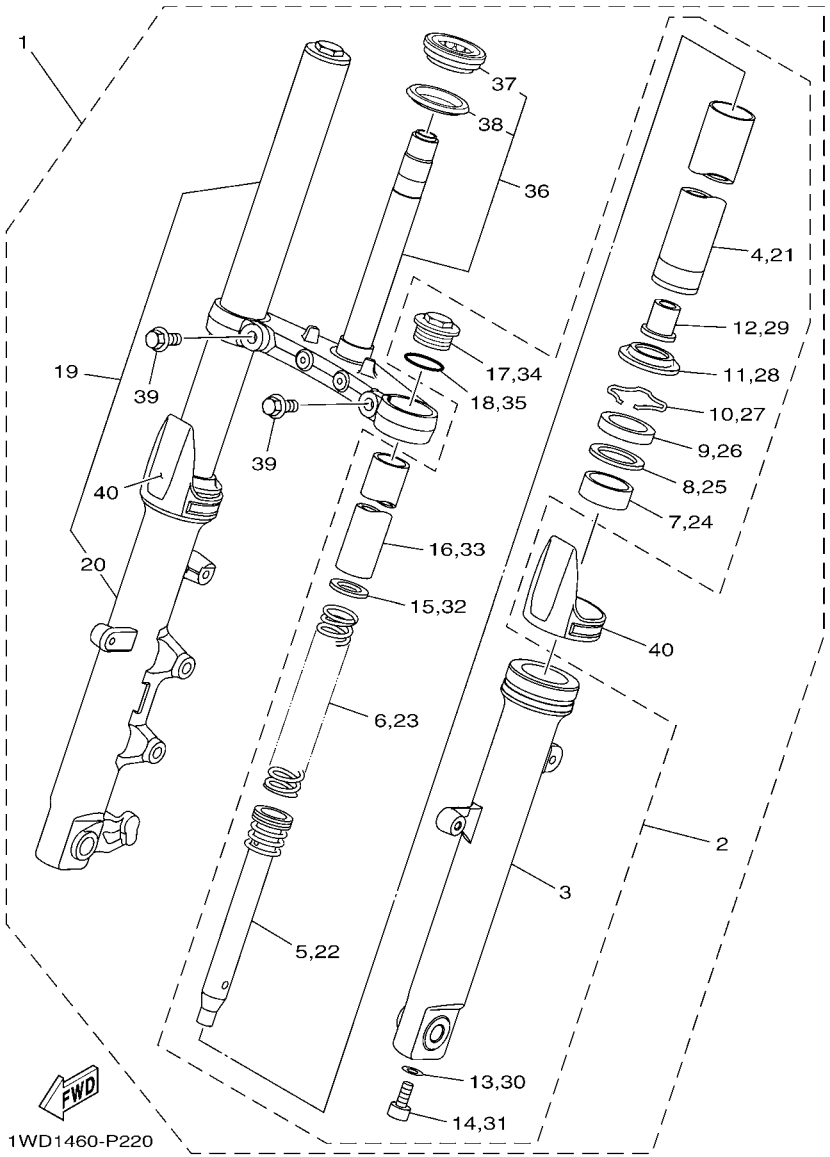


## FIG. 22 FRONT FORK HORQUILLA DELANTERA

| REF. NO. | PART NO. CODIGO Nº | DESCRIPTION DESCRIPCION | 2YP2 | | | | | REMARKS OBSERVACIONES |
|---|---|---|---|---|---|---|---|---|
| 1 | 1WD–F3100–00 | FRONT FORK ASSY<br>HORQUILLA DELANTERA COMPLETA | 1 | | | | | |
| 2 | 1WD–F3102–00 | .FRONT FORK ASSY (L.H)<br>.HORQUILLA DELANTERA COMPL.(MI) | 1 | | | | | |
| 3 | 1WD–F3126–00 | ..TUBE, OUTER (L.H)<br>..TUBO EXTERIOR (IZQUIERDO) | 1 | | | | | |
| 4 | 1WD–F3110–00 | ..INNER TUBE COMP.1<br>..TUBO INTERIOR COMPLETO 1 | 1 | | | | | |
| 5 | 1WD–F3170–00 | ..CYLINDER COMP., FRONT FORK<br>..CILINDRO COMPL DE HORQ DELANT | 1 | | | | | |
| 6 | 1WD–F3141–00 | ..SPRING, FRONT FORK<br>..RESORTE HORQUILLA DELANT. | 1 | | | | | |
| 7 | 45P–F3125–00 | ..METAL, SLIDE 1<br>..METAL CORREDIZO 1 | 1 | | | | | |
| 8 | 45P–F3146–00 | ..WASHER, OIL SEAL<br>..ARANDELA DE SELLO DE ACEITE | 1 | | | | | |
| 9 | 45P–F3145–00 | ..OIL SEAL<br>..RETEN DE ACEITE | 1 | | | | | |
| 10 | 45P–F3156–00 | ..RING, SNAP<br>..ANILLO DE ENGANCHE | 1 | | | | | |
| 11 | 45P–F3144–00 | ..SEAL, DUST<br>..GUARDAPOLVO | 1 | | | | | |
| 12 | 1WD–F3173–00 | ..SPINDLE, TAPER<br>..VASTAGO AHUSADO | 1 | | | | | |
| 13 | 509–F3158–L0 | ..GASKET<br>..EMPAQUE | 1 | | | | | |
| 14 | 31B–F3181–00 | ..BOLT, HEXAGON SOCKET HEAD<br>..TORNILLO CABEZAHEXAGONAL | 1 | | | | | |
| 15 | 45P–F3149–00 | ..WASHER, SPRING UPPER<br>..ARANDELA DE RESORTE SUPERIOR | 1 | | | | | |
| 16 | 1WD–F3118–00 | ..SPACER<br>..SEPARADOR | 1 | | | | | |
| 17 | 45P–F3111–00 | ..BOLT, CAP<br>..PERNO DE TAPA | 1 | | | | | |
| 18 | 45P–F3188–00 | ..O-RING<br>..ANILLO O | 1 | | | | | |
| 19 | 1WD–F3103–00 | .FRONT FORK ASSY (R.H)<br>.HORQUILLA DELANTERA COMPL.(MD) | 1 | | | | | |
| 20 | 1WD–F3136–00 | ..TUBE, OUTER<br>..TUBO EXTERIOR 2 | 1 | | | | | |
| 21 | 1WD–F3110–00 | ..INNER TUBE COMP.1<br>..TUBO INTERIOR COMPLETO 1 | 1 | | | | | |
| 22 | 1WD–F3170–00 | ..CYLINDER COMP., FRONT FORK<br>..CILINDRO COMPL DE HORQ DELANT | 1 | | | | | |
| 23 | 1WD–F3141–00 | ..SPRING, FRONT FORK<br>..RESORTE HORQUILLA DELANT. | 1 | | | | | |
| 24 | 45P–F3125–00 | ..METAL, SLIDE 1<br>..METAL CORREDIZO 1 | 1 | | | | | |
| 25 | 45P–F3146–00 | ..WASHER, OIL SEAL<br>..ARANDELA DE SELLO DE ACEITE | 1 | | | | | |
| 26 | 45P–F3145–00 | ..OIL SEAL<br>..RETEN DE ACEITE | 1 | | | | | |
| 27 | 45P–F3156–00 | ..RING, SNAP<br>..ANILLO DE ENGANCHE | 1 | | | | | |

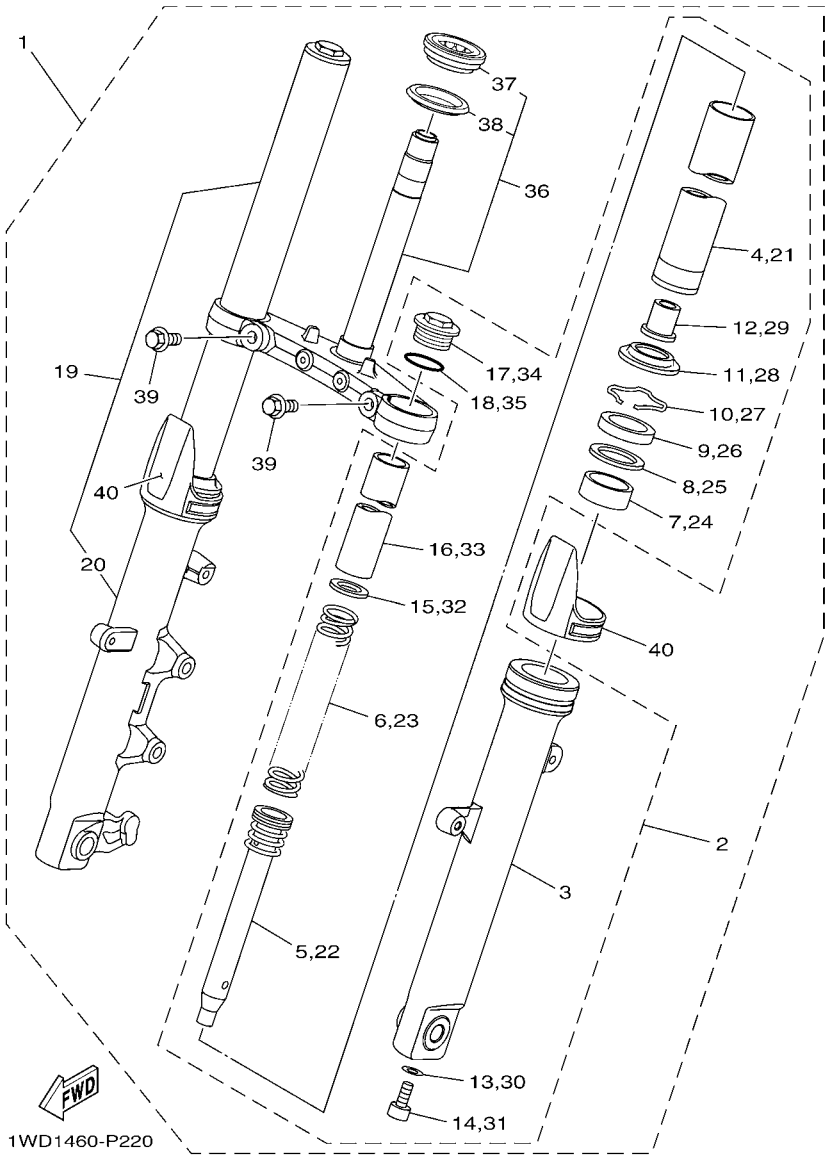


## FIG. 22 FRONT FORK HORQUILLA DELANTERA

| REF. NO. | PART NO. CODIGO Nº | DESCRIPTION DESCRIPCION | 2YP2 | | | | | REMARKS OBSERVACIONES |
|---|---|---|---|---|---|---|---|---|
| 28 | 45P–F3144–00 | ..SEAL, DUST<br>..GUARDAPOLVO | 1 | | | | | |
| 29 | 1WD–F3173–00 | ..SPINDLE, TAPER<br>..VASTAGO AHUSADO | 1 | | | | | |
| 30 | 509–F3158–L0 | ..GASKET<br>..EMPAQUE | 1 | | | | | |
| 31 | 31B–F3181–00 | ..BOLT, HEXAGON SOCKET HEAD<br>..TORNILLO CABEZAHEXAGONAL | 1 | | | | | |
| 32 | 45P–F3149–00 | ..WASHER, SPRING UPPER<br>..ARANDELA DE RESORTE SUPERIOR | 1 | | | | | |
| 33 | 1WD–F3118–00 | ..SPACER<br>..SEPARADOR | 1 | | | | | |
| 34 | 45P–F3111–00 | ..BOLT, CAP<br>..PERNO DE TAPA | 1 | | | | | |
| 35 | 45P–F3188–00 | ..O-RING<br>..ANILLO O | 1 | | | | | |
| 36 | 1WD–F3340–00 | .UNDER BRACKET COMP.<br>.PLATINA INFERIOR COMPLETA | 1 | | | | | |
| 37 | 93399–99932 | ..BEARING<br>..COJINETE | 1 | | | | | |
| 38 | 3FV–23462–00 | ..SEAL, STEERING<br>..SELLO PARA POLVO | 1 | | | | | |
| 39 | 45P–F3346–00 | .BOLT 1<br>.PERNO 1 | 2 | | | | | |
| 40 | 1WS–2331G–00 | .COVER<br>.CUBIERTA | 2 | | | | | |

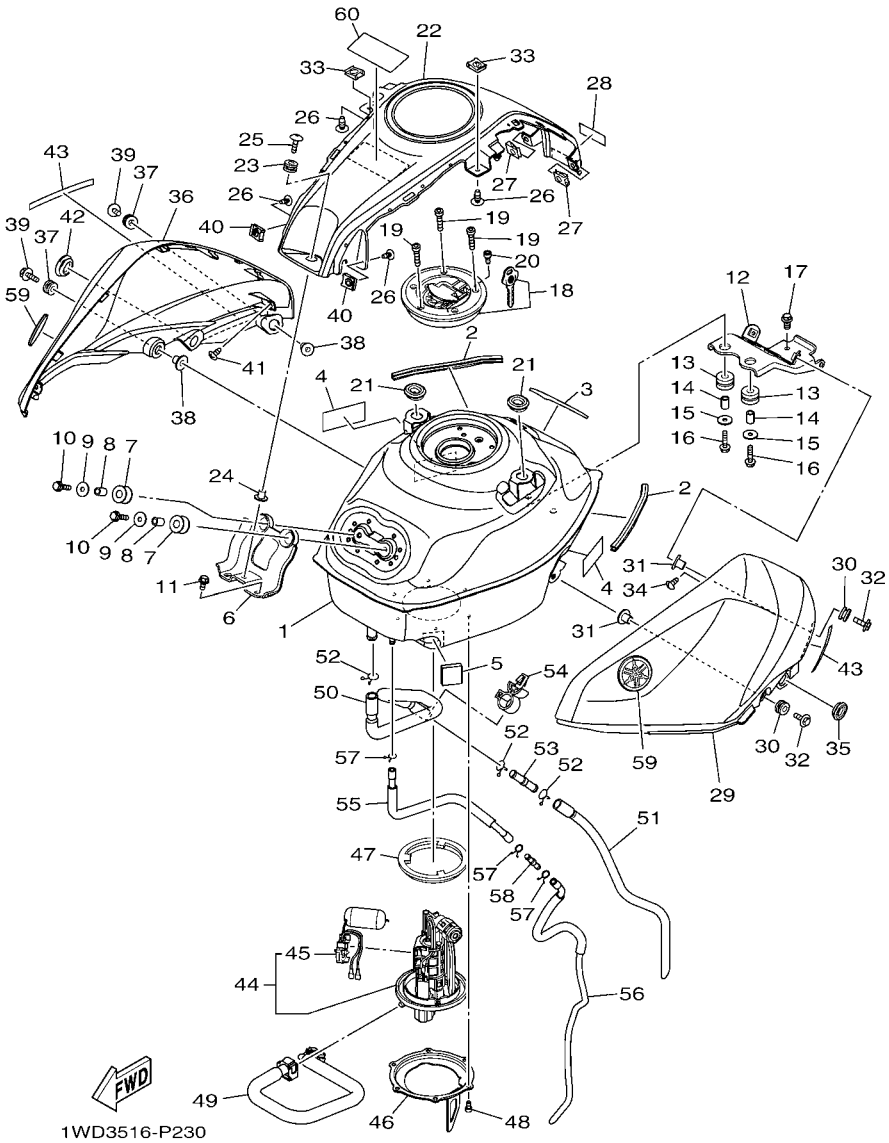


## FIG. 23 FUEL TANK — DEPOSITO DE COMBUSTIBLE

| REF. NO. | PART NO. CODIGO Nº | DESCRIPTION DESCRIPCION | 2YP2 | | | | | REMARKS OBSERVACIONES |
|---|---|---|---|---|---|---|---|---|
| 1 | 1WD–F4110–00 | FUEL TANK COMP.<br>DEPOSITO DE COMBUSTIBLE COMP. | 1 | | | | | |
| 2 | 1WD–F4188–00 | MOLD, FUEL TANK<br>MOLDURA DEPOSITO COMBUST. | 2 | | | | | |
| 3 | 90520–03823 | DAMPER, PLATE<br>EQUILIBRIO, CUBIERTA | 1 | | | | | |
| 4 | 5D9–F414G–00 | SEAL<br>SELLO | 2 | | | | | |
| 5 | 45P–F414H–00 | DAMPER, PLATE 1<br>EQUILIBRIO, CUBIERTA | 1 | | | | | |
| 6 | 1WD–F412Y–00 | BRACKET, TANK FITTING<br>SOPORTE TANK ELEQUIPO | 1 | | | | | |
| 7 | 1WD–F4339–00 | GROMMET<br>ANILLO PROTECTOR | 2 | | | | | |
| 8 | 90387–06299 | COLLAR<br>ESPACIADOR | 2 | | | | | |
| 9 | 90201–06380 | WASHER PLAIN<br>ARANDELA PLANA | 2 | | | | | |
| 10 | 95822–06025 | BOLT, FLANGE<br>TORNILLO DE REBORDE | 2 | | | | | |
| 11 | 95812–06012 | BOLT, FLANGE<br>TORNILLO DE REBORDE | 2 | | | | | |
| 12 | 1WD–F4191–00 | BRACKET, FUEL TANK 1<br>SOPORTE DEPOSITO DE COMBUST.1 | 1 | | | | | |
| 13 | 90480–15807 | GROMMET<br>TAPON | 2 | | | | | |
| 14 | 90387–06299 | COLLAR<br>ESPACIADOR | 2 | | | | | |
| 15 | 90201–06380 | WASHER PLAIN<br>ARANDELA PLANA | 2 | | | | | |
| 16 | 95822–06025 | BOLT, FLANGE<br>TORNILLO DE REBORDE | 2 | | | | | |
| 17 | 95022–08014 | BOLT, FLANGE<br>PERNO, DE BRIDA | 2 | | | | | |
| 18 | 1WD–WF461–00 | CAP ASSY<br>TAPON DEPOSITO COMPLETO | 1 | | | | | |
| 19 | 90110–05806 | BOLT, HEXAGON SOCKET HEAD<br>TORNILLO ALLEN | 3 | | | | | |
| 20 | 91312–05010 | BOLT<br>TORNILLO | 1 | | | | | |
| 21 | 90480–01558 | GROMMET<br>TAPON | 2 | | | | | |
| 22 | 1WD–F41B1–00–P1 | COVER, TANK<br>TAPA DE TANQUE | 1 | | | | | MS1 FOR DPBMC<br>MS1 PARA DPBMC |
| | 1WD–F41B1–00–P0 | COVER, TANK<br>TAPA DE TANQUE | 1 | | | | | MBL2 FOR SMX,VRC1<br>MBL2 PARA DPBMC |
| 23 | 90480–12808 | GROMMET<br>TAPON | 1 | | | | | |
| 24 | 90387–06899 | COLLAR<br>ESPACIADOR | 1 | | | | | |
| 25 | 90111–06117 | BOLT,HEX. SOCKET BUTTON<br>TORNILLO | 1 | | | | | |
| 26 | 97707–50012 | SCREW, TRUSS HEAD TAPPING<br>TORNILLO | 4 | | | | | |

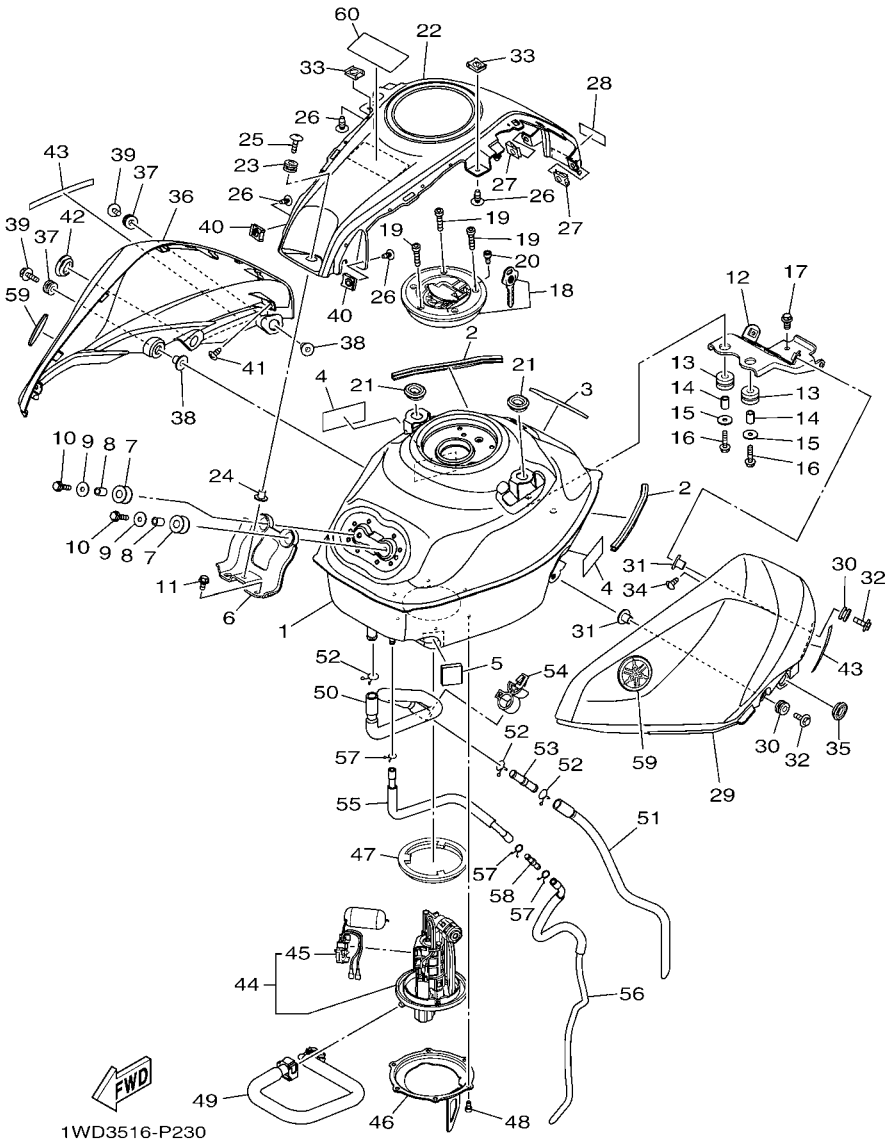


## FIG. 23 FUEL TANK — DEPOSITO DE COMBUSTIBLE

| REF. NO. | PART NO. CODIGO Nº | DESCRIPTION DESCRIPCION | 2YP2 | | | | | REMARKS OBSERVACIONES |
|---|---|---|---|---|---|---|---|---|
| 27 | 90183–05807 | NUT, SPRING<br>TUERCA DE RESORTE | 2 | | | | | |
| 28 | 1WD–F414G–00 | SEAL<br>SELLO | 1 | | | | | |
| 29 | 1WD–F4129–00–P1 | COVER, SIDE 1<br>CUBIERTA LATERAL 1 | 1 | | | | | UR FOR DPBMC<br>UR PARA DPBMC |
| | 1WD–F4129–00–P0 | COVER, SIDE 1<br>CUBIERTA LATERAL 1 | 1 | | | | | UR FOR SMX<br>UR PARA SMX |
| | 1WD–F4129–00–P2 | COVER, SIDE 1<br>CUBIERTA LATERAL 1 | 1 | | | | | UR FOR VRC1<br>UR PARA VRC1 |
| 30 | 90480–12808 | GROMMET<br>TAPON | 2 | | | | | |
| 31 | 90387–06899 | COLLAR<br>ESPACIADOR | 2 | | | | | |
| 32 | 90119–05020 | BOLT, WITH WASHER<br>TORNILLO CON ARANDELA | 2 | | | | | |
| 33 | 90183–05807 | NUT, SPRING<br>TUERCA DE RESORTE | 2 | | | | | |
| 34 | 97707–50012 | SCREW, TRUSS HEAD TAPPING<br>TORNILLO | 1 | | | | | |
| 35 | 90480–01559 | GROMMET<br>TAPON | 1 | | | | | |
| 36 | 1WD–F4139–00–P1 | COVER, SIDE 2<br>CUBIERTA LATERAL 2 | 1 | | | | | UR FOR DPBMC<br>UR PARA DPBMC |
| | 1WD–F4139–00–P0 | COVER, SIDE 2<br>CUBIERTA LATERAL 2 | 1 | | | | | UR FOR SMX<br>UR PARA SMX |
| | 1WD–F4139–00–P2 | COVER, SIDE 2<br>CUBIERTA LATERAL 2 | 1 | | | | | UR FOR VRC1<br>UR PARA VRC1 |
| 37 | 90480–12808 | GROMMET<br>TAPON | 2 | | | | | |
| 38 | 90387–06899 | COLLAR<br>ESPACIADOR | 2 | | | | | |
| 39 | 90119–05020 | BOLT, WITH WASHER<br>TORNILLO CON ARANDELA | 2 | | | | | |
| 40 | 90183–05807 | NUT, SPRING<br>TUERCA DE RESORTE | 2 | | | | | |
| 41 | 97707–50012 | SCREW, TRUSS HEAD TAPPING<br>TORNILLO | 1 | | | | | |
| 42 | 90480–01559 | GROMMET<br>TAPON | 1 | | | | | |
| 43 | 1WD–F414E–00 | SEAL 2<br>SELLO 2 | 2 | | | | | |
| 44 | 1WD–E3907–00 | FUEL PUMP COMP.<br>BOMBA DE COMBUSTIBLE COMPLETA | 1 | | | | | |
| 45 | 1WD–H5752–00 | SENDER UNIT ASSY, FUEL METER<br>UNIDAD TRANSM. MED. COMBUST. | 1 | | | | | |
| 46 | 1WD–F4491–00 | BRACKET, FUEL PUMP<br>SOPORTE BOMBA COMBUSTIBLE | 1 | | | | | |
| 47 | 3C1–F4486–00 | O-RING<br>ANILLO O | 1 | | | | | |
| 48 | 91312–05010 | BOLT<br>TORNILLO | 6 | | | | | |
| 49 | 1WD–E3971–00 | PIPE, FUEL 1<br>ANILLO DE ESPACIADOR | 1 | | | | | |

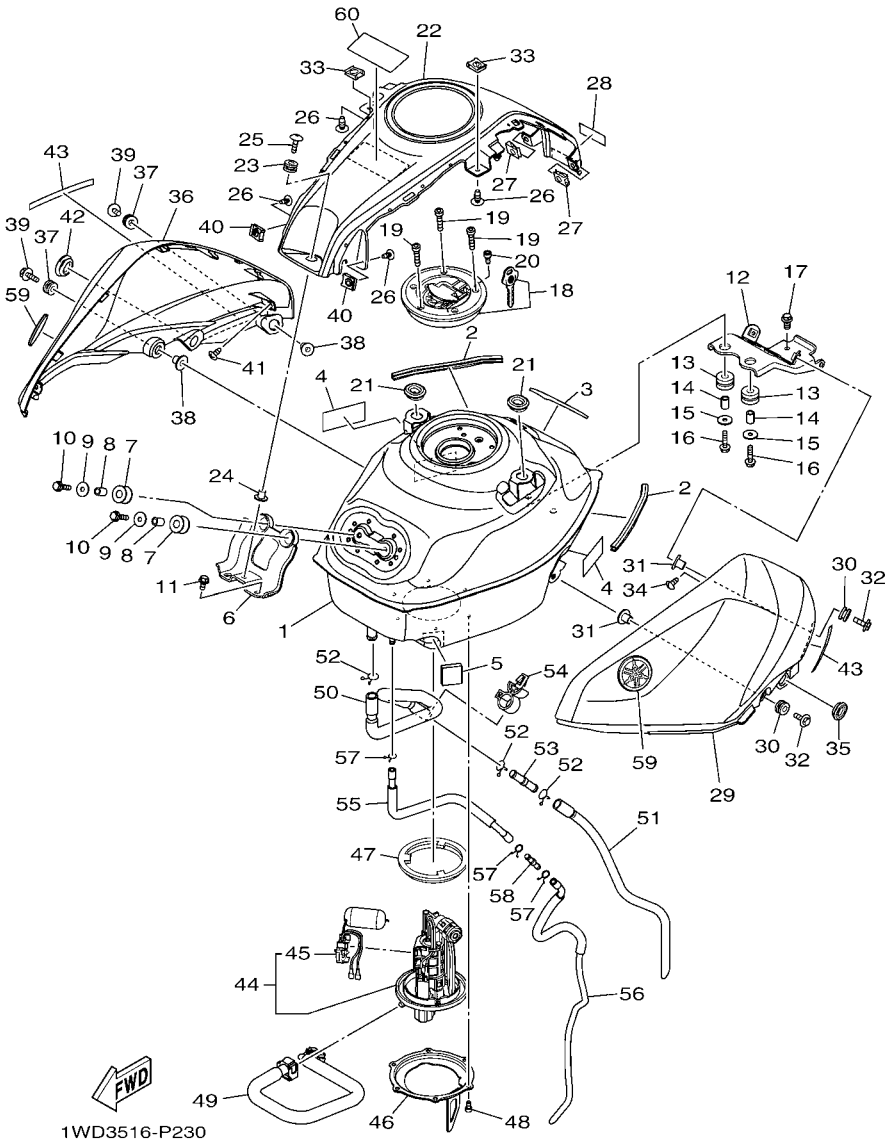


## FIG. 23 FUEL TANK — DEPOSITO DE COMBUSTIBLE

| REF. NO. | PART NO. CODIGO Nº | DESCRIPTION DESCRIPCION | 2YP2 | | | | | REMARKS OBSERVACIONES |
|---|---|---|---|---|---|---|---|---|
| 50 | 1WD–F4312–00 | PIPE 2<br>TUBO 2 | 1 | | | | | |
| 51 | 1WD–F4314–00 | PIPE 4<br>TUBO 4 | 1 | | | | | |
| 52 | 90467–15012 | CLIP<br>PRESILLA | 3 | | | | | |
| 53 | 1WD–F4376–00 | PIPE, JOINT 1<br>TUBO DE UNION 1 | 1 | | | | | |
| 54 | 90464–16012 | CLAMP<br>BRIDA | 1 | | | | | |
| 55 | 1WD–F4313–00 | PIPE 3<br>TUBO 3 | 1 | | | | | |
| 56 | 1WD–F4315–00 | PIPE 5<br>TUBO DE DESAGUE | 1 | | | | | |
| 57 | 90467–09006 | CLIP<br>PRESILLA | 3 | | | | | |
| 58 | 4XY–14568–00 | JOINT<br>UNION | 1 | | | | | |
| 59 | 1WD–F413B–00 | EMBLEM<br>EMBLEMA | 2 | | | | | |
| 60 | 26P–21568–10 | LABEL, WARNING<br>ETIQUETA DE PRECAUCION | 1 | | | | | |

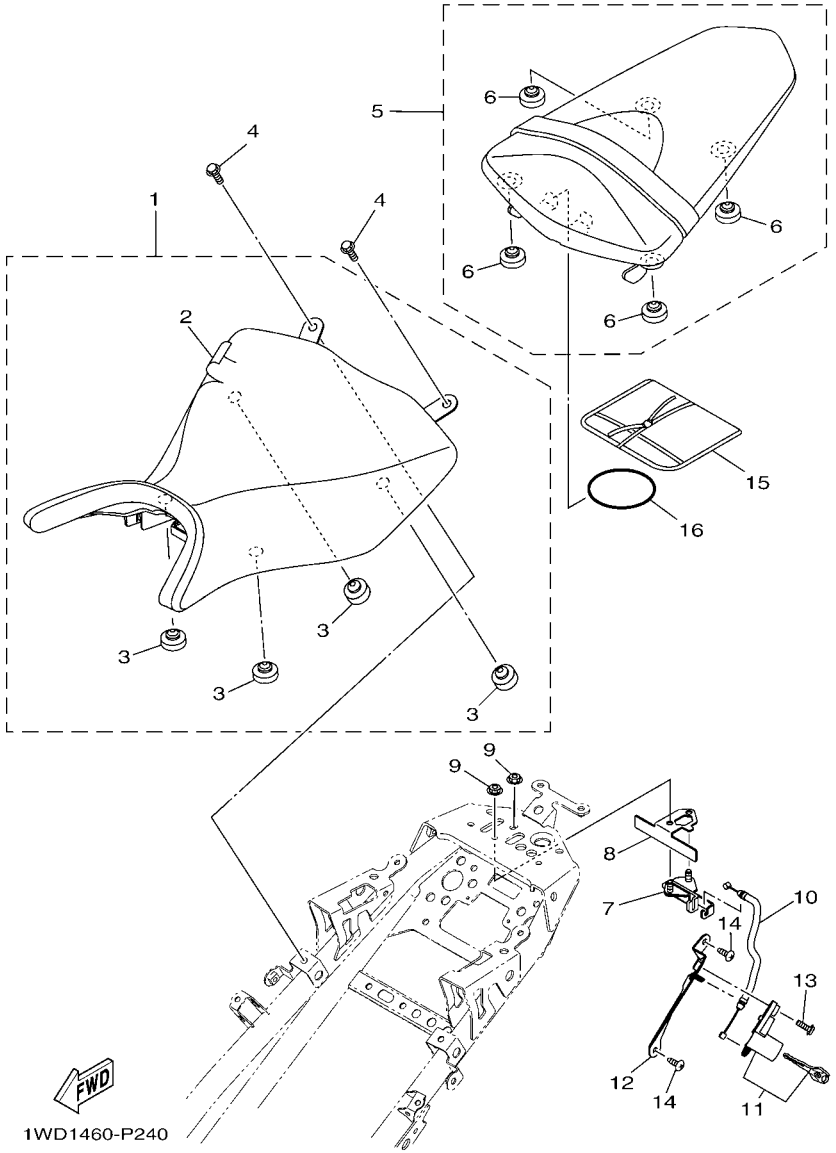


## FIG. 24 SEAT ASIENTO

| REF. NO. | PART NO. CODIGO Nº | DESCRIPTION DESCRIPCION | 2YP2 | | | | | REMARKS OBSERVACIONES |
|---|---|---|---|---|---|---|---|---|
| 1 | 1WD–F4710–00 | SINGLE SEAT ASSY<br>ASIENTO SIMPLE COMPLETO | 1 | | | | | |
| 2 | 1WD–F4711–00 | .COVER, SINGLE SEAT<br>.CUBIERTA DE ASIENTO SIMPLE | 1 | | | | | |
| 3 | 5BP–F4741–00 | .PAD, SEAT<br>.COJIN DE ASIENTO | 4 | | | | | |
| 4 | 95022–06012 | BOLT, FLANGE<br>PERNO, DE BRIDA | 2 | | | | | |
| 5 | 1WD–F4750–00 | TANDEM SEAT ASSY<br>ASIENTO TANDEM COMPLETO | 1 | | | | | |
| 6 | 3C1–F4741–00 | .PAD, SEAT<br>.COJIN DE ASIENTO | 4 | | | | | |
| 7 | 1WD–F4780–00 | SEAT LOCK ASSY<br>CERRADURA SILLIN COMPLETO | 1 | | | | | |
| 8 | 1WD–F4792–00 | PLATE<br>PLACA | 1 | | | | | |
| 9 | 95707–06500 | NUT, FLANGE<br>TUERCA DE BRIDA | 2 | | | | | |
| 10 | 1WD–F478E–00 | CABLE, SEAT LOCK<br>CABLE | 1 | | | | | |
| 11 | 1WD–WF479–00 | ROTOR SUB ASSY WITH KEY<br>CUBIERTA, DE COLA | 1 | | | | | |
| 12 | 1WD–F117K–00 | STAY, LOCK<br>SOPORTE DE CERRADURA | 1 | | | | | |
| 13 | 90159–06054 | SCREW, WITH WASHER<br>TORNILLO CON VALONA | 1 | | | | | |
| 14 | 97702–50016 | SCREW, TAPPING<br>TORNILLO ROSCA HEMBRA | 2 | | | | | |
| 15 | 1WD–F8100–00 | TOOL KIT<br>JUEGO DE HERRAMIENTAS | 1 | | | | | |
| 16 | 5TL–H2131–00 | BAND, BATTERY<br>TIRANTE DE BATERIA | 1 | | | | | |

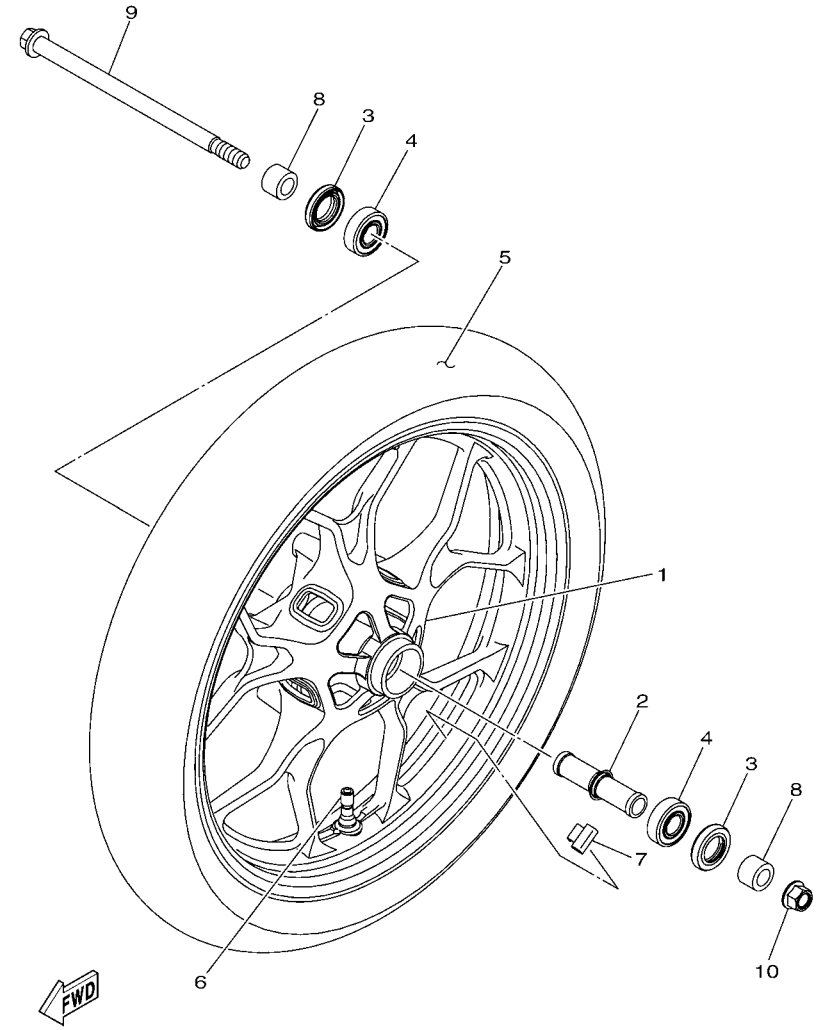


## FIG. 25 FRONT WHEEL RUEDA DELANTERA

| REF. NO. | PART NO. CODIGO Nº | DESCRIPTION DESCRIPCION | 2YP2 | | | | | REMARKS OBSERVACIONES |
|---|---|---|---|---|---|---|---|---|
| 1 | 1WD–F5168–00–P0 | CAST WHEEL, FRONT<br>RUEDA FUNDIDA DELANTERA | 1 | | | | | DPBM15 FOR A<br>DPBM15 PARA A |
| | 1WD–F5168–00–0X | CAST WHEEL, FRONT<br>RUEDA FUNDIDA DELANTERA | 1 | | | | | LGB/DRSC FOR B,C<br>LGB/DRSC PARA B,C |
| 2 | 1WD–F510C–00 | COLLAR ASSY.<br>COLLAR | 1 | | | | | |
| 3 | 93106–26815 | OIL SEAL<br>SELLO ACEITE | 2 | | | | | |
| 4 | 93306–302X4 | BEARING<br>COJINETE | 2 | | | | | |
| 5 | 94111–17803 | TIRE (110/70-17 M/C 54H)<br>NEUMATICO (110/70-17 M/C 54H) | 1 | | | | | MICHELIN<br>MICHELIN |
| 6 | 93900–00828 | VALVE, RIM<br>VALVULA | 1 | | | | | |
| 7 | 5MT–25398–00 | BALANCER, WHEEL (10G)<br>BALANCEADOR DE RUEDA (10G) | 1 | | | | | UN<br>UN |
| | 5MT–25398–10 | BALANCER, WHEEL (20G)<br>BALANCEADOR DE RUEDA (20G) | 1 | | | | | UN<br>UN |
| | 5MT–25398–20 | BALANCER, WHEEL (30G)<br>BALANCEADOR DE RUEDA (30G) | 1 | | | | | UN<br>UN |
| 8 | 1PA–F5386–00 | COLLAR, SPROCKET AXLE<br>COLLAR EJE DE RUEDA DENTADA | 2 | | | | | |
| 9 | 1WD–25181–00 | AXLE, WHEEL<br>EJE DE LA RUEDA | 1 | | | | | |
| 10 | 95602–14200 | NUT, SELF-LOCKING<br>TUERCA DE AUTO-CIERRE | 1 | | | | | |

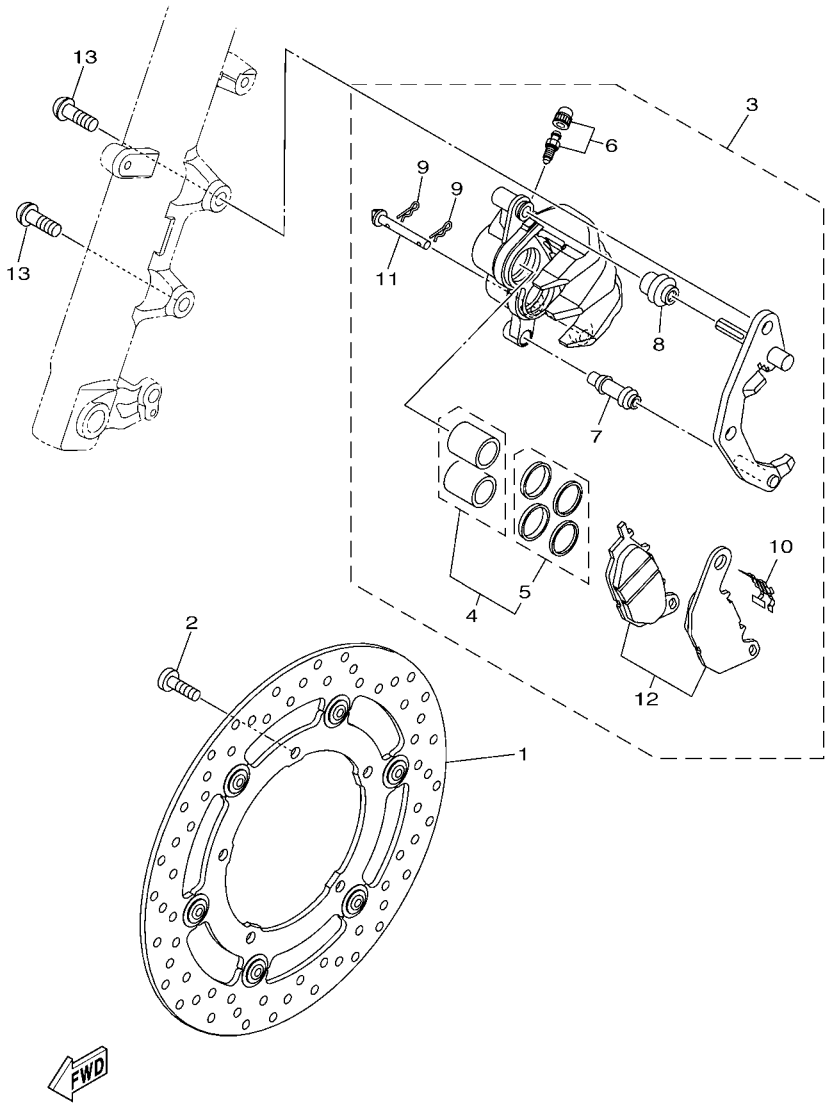


## FIG. 26 FRONT BRAKE CALIPER CALIBRE FRENO DELANTERA

| REF. NO. | PART NO. CODIGO Nº | DESCRIPTION DESCRIPCION | 2YP2 | | | | | REMARKS OBSERVACIONES |
|---|---|---|---|---|---|---|---|---|
| 1 | 1WD–F581U–00 | DISK BRAKE ASSY (RIGHT)<br>DISCO DE FRENO (DERECO) | 1 | | | | | |
| 2 | 90111–08815 | BOLT,HEX. SOCKET BUTTON<br>TORNILLO | 5 | | | | | |
| 3 | 1WD–F580U–01 | CALIPER ASSY (RIGHT)<br>CALIBRE COMPLETO (DERECHO) | 1 | | | | | |
| 4 | 1WD–25802–00 | .PISTON ASSY, CALIPER<br>.PISTON COMPLETO PINZA | 1 | | | | | |
| 5 | 1WD–25803–00 | ..CALIPER SEAL KIT<br>..JUEGO DE RETENES DE PINZA | 1 | | | | | |
| 6 | 4C9–W0048–00 | .BLEED SCREW KIT<br>.CJTO TORNILLO DE PURGA | 1 | | | | | |
| 7 | 5YP–F5937–00 | .BOOT 2<br>.FUNDA | 1 | | | | | |
| 8 | 5YP–F5917–00 | .BOOT, CALIPER<br>.FUNDA DE CALIBRE | 1 | | | | | |
| 9 | 5YP–F5925–01 | .CLIP<br>.PRESILLA | 2 | | | | | |
| 10 | 1WD–F5919–00 | .SUPPORT, PAD<br>.SOPORTE DE PASTILLAS | 1 | | | | | |
| 11 | 5YP–F5924–00 | .PIN, PAD<br>.PASADOR | 1 | | | | | |
| 12 | 1WD–25805–00 | .BRAKE PAD KIT<br>.JUEGO DE COJIN DE FRENO | 1 | | | | | |
| 13 | 90149–10804 | SCREW<br>TORNILLO DE REGLAJE | 2 | | | | | |

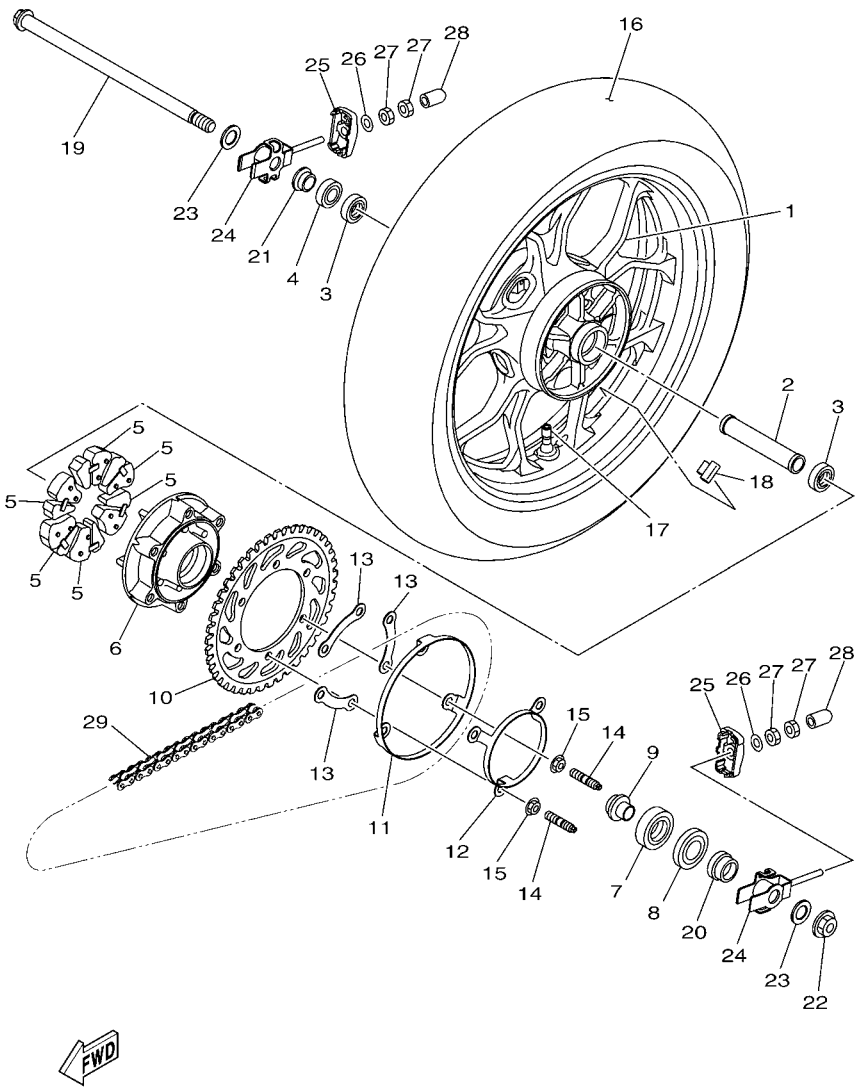


## FIG. 27 REAR WHEEL RUEDA TRASERA

| REF. NO. | PART NO. CODIGO Nº | DESCRIPTION DESCRIPCION | 2YP2 | | | | | REMARKS OBSERVACIONES |
|---|---|---|---|---|---|---|---|---|
| 1 | 1WD–F5338–00–P0 | CAST WHEEL, REAR<br>RUEDA FUNDIDA TRASERA | 1 | | | | | DPBM15 FOR A FOR<br>DPBM15 FOR A PARA |
| | 1WD–F5338–00–0X | CAST WHEEL, REAR<br>RUEDA FUNDIDA TRASERA | 1 | | | | | LGB/DRSC FOR B,C<br>LGB/DRSC FOR B,C |
| 2 | 90387–17810 | COLLAR<br>ESPACIADOR | 1 | | | | | |
| 3 | 93306–20314 | BEARING<br>COJINETE | 2 | | | | | |
| 4 | 93106–23002 | OIL SEAL<br>SELLO ACEITE | 1 | | | | | |
| 5 | 1WD–F5364–00 | DAMPER<br>AMORTIGUADOR | 6 | | | | | |
| 6 | 1WD–F5366–00–P0 | CLUTCH, HUB<br>EMBRAGUE DE MASA | 1 | | | | | FOR DPBMC<br>PARA DPBMC |
| | 1WD–F5366–00–98 | CLUTCH, HUB<br>EMBRAGUE DE MASA | 1 | | | | | LGB FOR SMX,VRC1<br>LGB PARA SMX,VRC1 |
| 7 | 93306–30450 | BEARING<br>COJINETE | 1 | | | | | |
| 8 | 93106–38046 | OIL SEAL<br>SELLO ACEITE | 1 | | | | | |
| 9 | 1WD–F5377–00 | COLLAR, WHEEL<br>COLLAR DE RUEDA | 1 | | | | | |
| 10 | 1WD–F5443–00 | SPROCKET, DRIVEN (43T)<br>CORONA (43T) | 1 | | | | | |
| 11 | 1WD–F537W–00 | BRACKET 1<br>SOPORTE 1 | 1 | | | | | |
| 12 | 1WD–F537X–00 | BRKT 2<br>SOPORTE 2 | 1 | | | | | |
| 13 | 1WD–F539F–00 | PLATE 1<br>PLACA 1 | 3 | | | | | |
| 14 | 90116–10065 | BOLT, STUD<br>ESPARRAGO | 6 | | | | | |
| 15 | 95602–10200 | NUT, U FLANGE<br>TUERCA DE AUTO-CIERRE | 6 | | | | | |
| 16 | 94114–17803 | TIRE (140/70-17 M/C 66H)<br>NEUMATICO (140/70-17 M/C 66H) | 1 | | | | | MICHELIN<br>MICHELIN |
| 17 | 93900–00828 | VALVE, RIM<br>VALVULA | 1 | | | | | |
| 18 | 5MT–25398–00 | BALANCER, WHEEL (10G)<br>BALANCEADOR DE RUEDA (10G) | 1 | | | | | UN<br>UN |
| | 5MT–25398–10 | BALANCER, WHEEL (20G)<br>BALANCEADOR DE RUEDA (20G) | 1 | | | | | UN<br>UN |
| | 5MT–25398–20 | BALANCER, WHEEL (30G)<br>BALANCEADOR DE RUEDA (30G) | 1 | | | | | UN<br>UN |
| 19 | 1WD–25381–00 | AXLE, WHEEL<br>EJE DE RUEDA | 1 | | | | | |
| 20 | 1WD–F5386–00 | COLLAR, SPROCKET AXLE<br>COLLAR EJE DE RUEDA DENTADA | 1 | | | | | |
| 21 | 1WD–F5383–00 | COLLAR, WHEEL<br>COLLAR DE RUEDA | 1 | | | | | |
| 22 | 95602–16200 | NUT, SELF-LOCKING<br>TUERCA DE AUTO-CIERRE | 1 | | | | | |
| 23 | 90201–17809 | WASHER, PLATE<br>ARANDELA PLANA | 2 | | | | | |

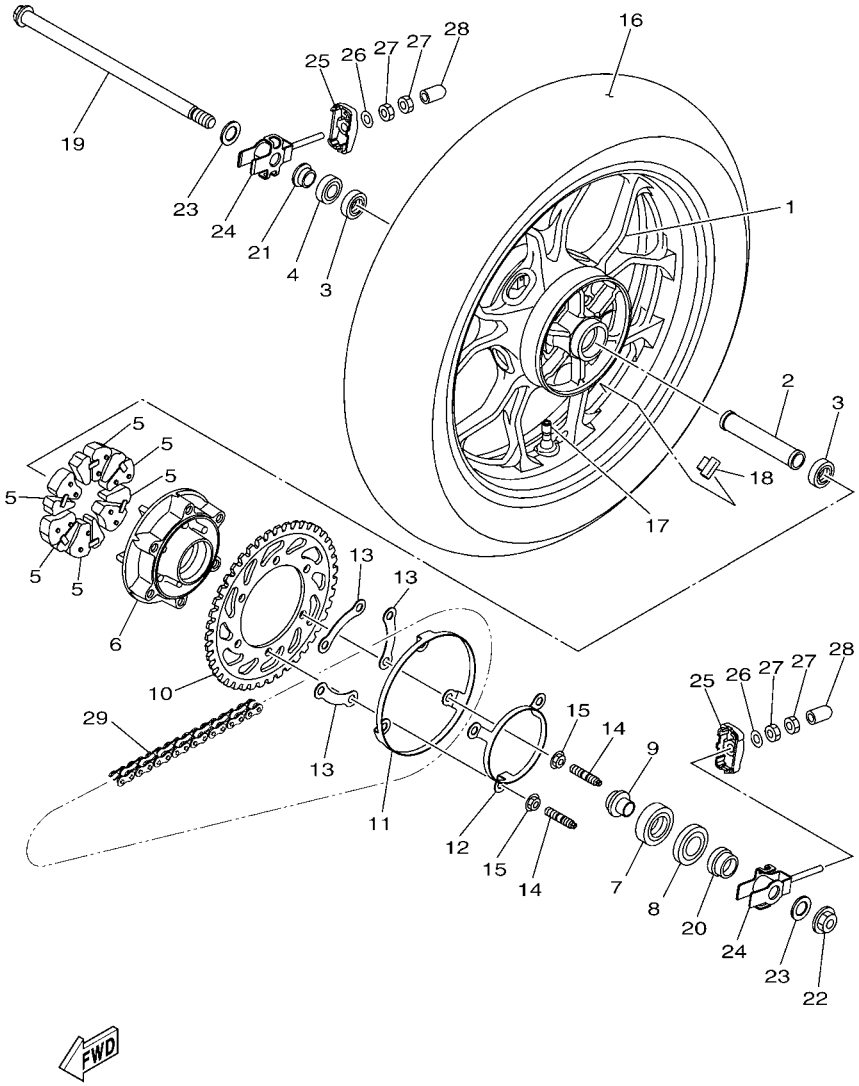


## FIG. 27 REAR WHEEL RUEDA TRASERA

| REF. NO. | PART NO. CODIGO Nº | DESCRIPTION DESCRIPCION | 2YP2 | | | | | REMARKS OBSERVACIONES |
|---|---|---|---|---|---|---|---|---|
| 24 | 1WD–F5388–00 | PULLER, CHAIN 1<br>TIRADOR DE CADENA 1 | 2 | | | | | |
| 25 | 1WD–F2174–00 | END 1<br>EXTREMO 1 | 2 | | | | | |
| 26 | 92902–08600 | WASHER, PLATE<br>ARANDELA | 2 | | | | | |
| 27 | 95302–08600 | NUT, HEXAGON<br>TUERCA | 4 | | | | | |
| 28 | 40D–E443G–00 | PIPE, DRAIN 2<br>TUBO, DRENAJE 2 | 2 | | | | | |
| 29 | 94568–H3112 | CHAIN (DID520VF 112LE)<br>CADENA (DID520VF 112LE) | 1 | | | | | |

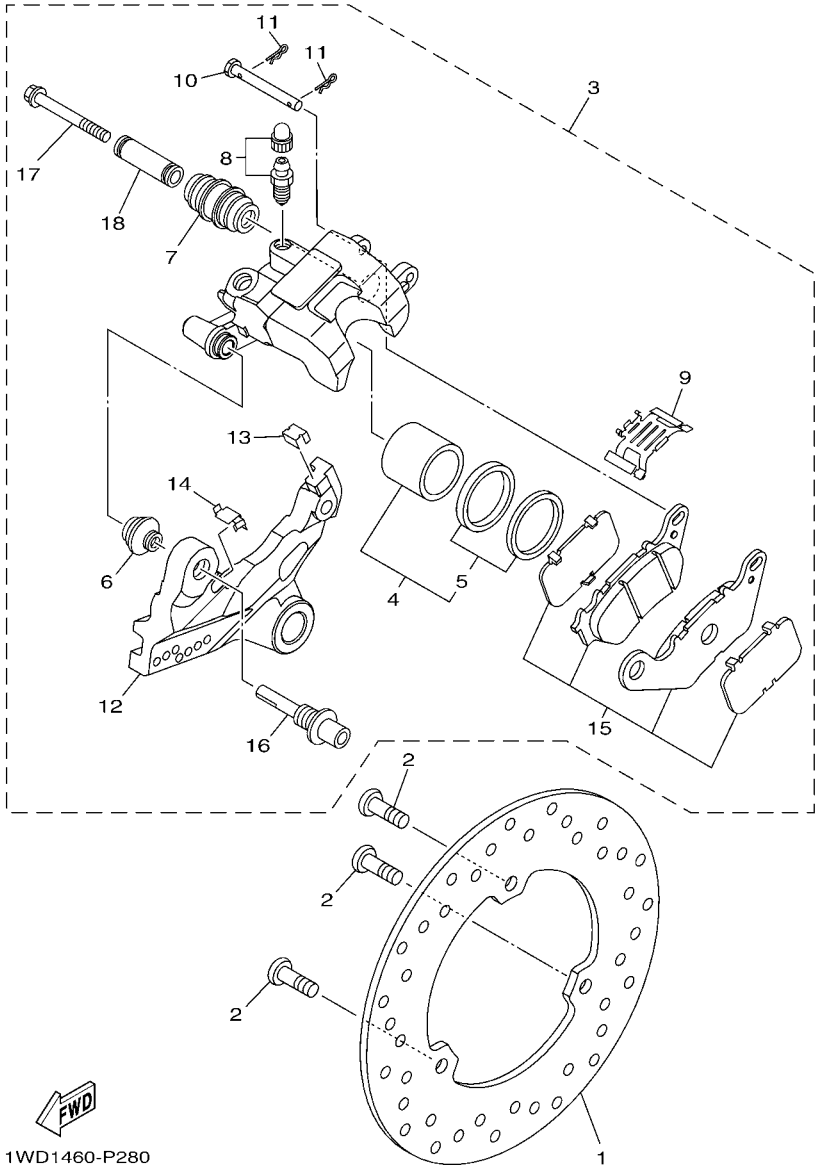


## FIG. 28 REAR BRAKE CALIPER CALIBRE FRENO TRASERA

| REF. NO. | PART NO. CODIGO Nº | DESCRIPTION DESCRIPCION | 2YP2 | | | | | REMARKS OBSERVACIONES |
|---|---|---|---|---|---|---|---|---|
| 1 | 1WD–F582W–00 | DISK, REAR BRAKE 2<br>DISCO DE FRENO TRASEROS 2 | 1 | | | | | |
| 2 | 90111–08815 | BOLT,HEX. SOCKET BUTTON<br>TORNILLO | 3 | | | | | |
| 3 | 1WD–F580W–01 | CALIPER ASSY, REAR 2<br>CALIBRE COMPLETO TRASEROS 2 | 1 | | | | | |
| 4 | 1WD–25802–50 | .PISTON ASSY, CALIPER<br>.PISTON COMPLETO PINZA | 1 | | | | | |
| 5 | 1WD–25803–50 | ..CALIPER SEAL KIT<br>..JUEGO DE RETENES DE PINZA | 1 | | | | | |
| 6 | 5YP–F5917–00 | .BOOT, CALIPER<br>.FUNDA DE CALIBRE | 1 | | | | | |
| 7 | 34X–25937–00 | .BOOT 2<br>.FUNDA | 1 | | | | | |
| 8 | 5YP–W0048–50 | .BLEED SCREW KIT<br>.CJTO TORNILLO DE PURGA | 1 | | | | | |
| 9 | 1WD–F5919–50 | .SUPPORT, PAD<br>.SOPORTE DE PASTILLAS | 1 | | | | | |
| 10 | 1WD–F5924–50 | .PIN, PAD<br>.PASADOR | 1 | | | | | |
| 11 | 5YP–F5925–01 | .CLIP<br>.PRESILLA | 2 | | | | | |
| 12 | 1WD–F5921–50 | .BRACKET, SUPPORT<br>.MENSULA DE SOPORTE | 1 | | | | | |
| 13 | 1WD–F5939–50 | .CLIP, PAD<br>.PRESILLA | 1 | | | | | |
| 14 | 1WD–F5939–60 | .CLIP, PAD<br>.PRESILLA | 1 | | | | | |
| 15 | 1WD–25806–00 | .BRAKE PAD KIT 2<br>.JUEGO DE PASTILLAS DE FRENO 2 | 1 | | | | | |
| 16 | 1WD–F5914–50 | .PIN, SLIDE<br>.PASADOR | 1 | | | | | |
| 17 | 5KN–25926–01 | .BOLT<br>.PERNO | 1 | | | | | |
| 18 | 5TL–F5838–00 | .SLEEVE, CALIPER<br>.CASQUILLO DE CALIBRE | 1 | | | | | |

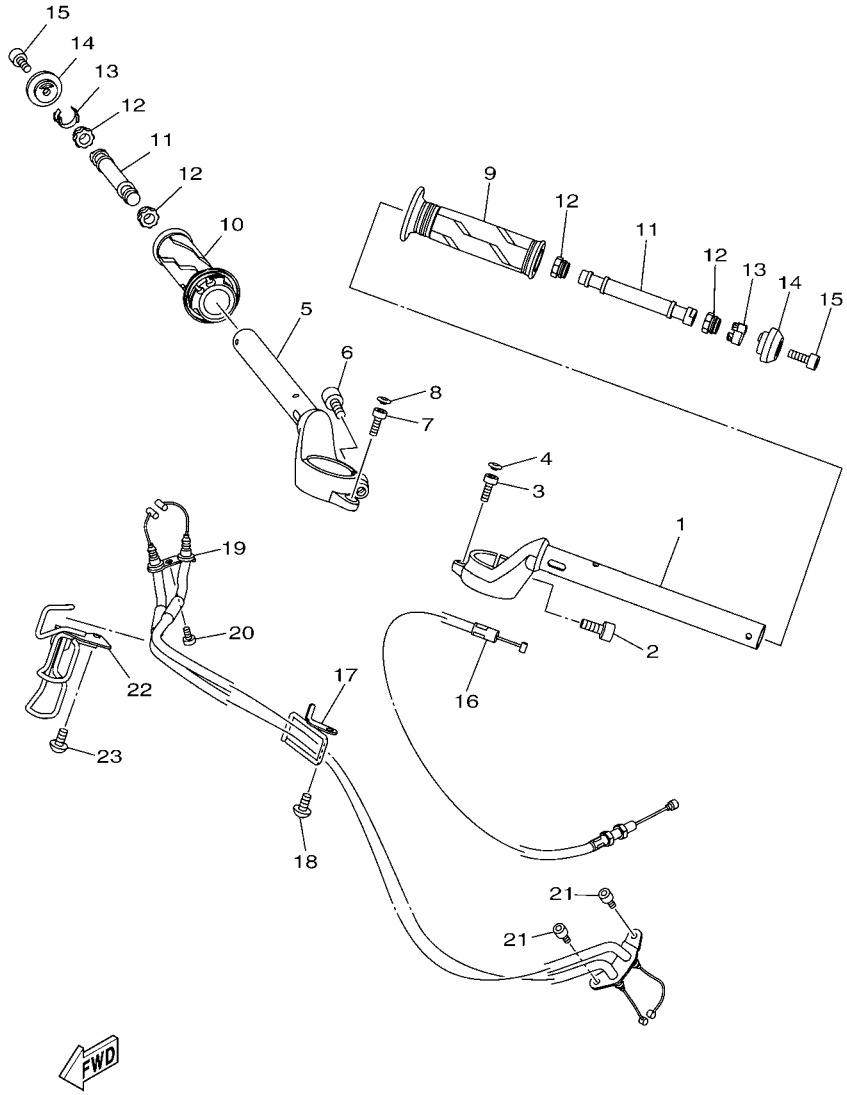


## FIG. 29 STEERING HANDLE & CABLE MANILLAR & CABLE

| REF. NO. | PART NO. CODIGO Nº | DESCRIPTION DESCRIPCION | 2YP2 | | | | | REMARKS OBSERVACIONES |
|---|---|---|---|---|---|---|---|---|
| 1 | 1WD–F6121–01 | HANDLEBAR (LEFT)<br>MANUBRIO (MI) | 1 | | | | | |
| 2 | 91317–08020 | BOLT<br>PERNO | 1 | | | | | |
| 3 | 91317–06016 | BOLT<br>PERNO | 1 | | | | | |
| 4 | 90338–05010 | PLUG<br>TAPON | 1 | | | | | |
| 5 | 1WD–F6122–00 | HANDLEBAR (RIGHT)<br>MANUBRIO (MD) | 1 | | | | | |
| 6 | 91317–08020 | BOLT<br>PERNO | 1 | | | | | |
| 7 | 91317–06016 | BOLT<br>PERNO | 1 | | | | | |
| 8 | 90338–05010 | PLUG<br>TAPON | 1 | | | | | |
| 9 | 2DP–F6241–00 | GRIP<br>EMPUNADURA | 1 | | | | | |
| 10 | 1WD–F6240–00 | GRIP ASSY<br>EMPUNADURA COMPLETA | 1 | | | | | |
| 11 | 2MS–F622H–00 | WEIGHT<br>CONTRAPESO | 2 | | | | | |
| 12 | 1S7–F622F–00 | DAMPER, LOCATING 1<br>AMORTIGUADOR, DE UBICACION 1 | 4 | | | | | |
| 13 | 1S7–F6257–00 | STOPPER<br>TOPE | 2 | | | | | |
| 14 | 1WD–F6246–00 | END, GRIP<br>EXTREMO DE EMPUNADURA | 2 | | | | | |
| 15 | 91317–06020 | BOLT<br>PERNO | 2 | | | | | |
| 16 | 1WD–F6335–00 | CABLE, CLUTCH<br>CABLE DE EMBRAGUE | 1 | | | | | |
| 17 | 1WD–F6131–00 | GUIDE, CABLE 1<br>GUIA DE CABLE 1 | 1 | | | | | |
| 18 | 92012–06012 | BOLT, BUTTON HEAD<br>PERNO | 1 | | | | | |
| 19 | 1WD–F6301–00 | THROTTLE CABLE ASSY<br>CABLE DE ACELERADOR COMPLETO | 1 | | | | | |
| 20 | 98507–05012 | SCREW, PAN HEAD<br>TORNILLO DE CABEZA PLANA | 1 | | | | | |
| 21 | 91312–05010 | BOLT<br>TORNILLO | 2 | | | | | |
| 22 | 1WD–F6132–00 | GUIDE, CABLE 2<br>GUIA DE CABLE 2 | 1 | | | | | |
| 23 | 92012–06012 | BOLT, BUTTON HEAD<br>PERNO | 1 | | | | | |

## FIG. 30 FRONT MASTER CYLINDER CILINDRO MAESTRO DELANTERO

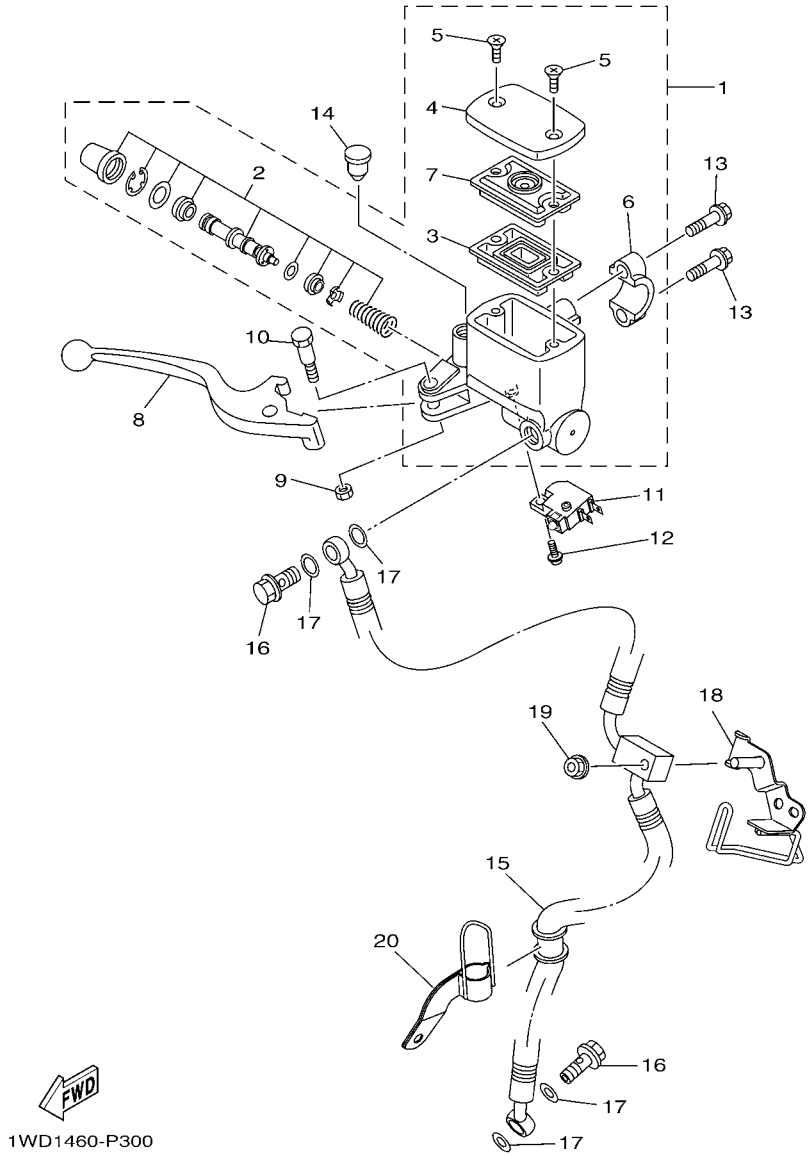


| REF. NO. | PART NO. CODIGO Nº | DESCRIPTION DESCRIPCION | 2YP2 | | | | | REMARKS OBSERVACIONES |
|---|---|---|---|---|---|---|---|---|
| 1 | 1WD–F5870–00 | MASTER CYLINDER SUB ASSY<br>CILINDRO MAESTRO COMPLETO | 1 | | | | | |
| 2 | 1WD–F5807–00 | .CYLINDER KIT, MASTER<br>.JUEGO DE CILINDRO MAESTRO | 1 | | | | | |
| 3 | 5RB–25854–00 | .DIAPHRAGM, RESERVOIR<br>.EMPAQUE,DIAFRAGMA | 1 | | | | | |
| 4 | 1WD–F5852–00 | .CAP, RESERVOIR<br>.TAPA DE TANQUE DE RESERVA | 1 | | | | | |
| 5 | 36Y–2589H–00 | .SCREW<br>.TORNILLO | 2 | | | | | |
| 6 | 3RW–F5867–00 | .BRACKET, MASTER CYLINDER<br>.SOPORTE DE CILINDRO MAESTRO | 1 | | | | | |
| 7 | 3C1–F5855–00 | .BUSH,DIAPHRAGM<br>.BUJE DE DIAFRAGMA | 1 | | | | | |
| 8 | 1WD–H3922–00 | LEVER 2<br>PALANCA 2 | 1 | | | | | |
| 9 | 95602–06100 | NUT, U<br>TUERCA U | 1 | | | | | |
| 10 | 90109–06577 | BOLT<br>PERNO | 1 | | | | | |
| 11 | 1HP–83980–01 | FRONT STOP SWITCH ASSY<br>INTERRUP. DE PARADA DELANTERO | 1 | | | | | |
| 12 | 97602–04212 | SCREW, PAN HEAD WITH WASHER<br>TORNILLO CON RONDONA | 1 | | | | | |
| 13 | 95027–06025 | BOLT, FLANGE<br>PERNO, DE BRIDA | 2 | | | | | |
| 14 | 90338–09012 | PLUG<br>TAPON | 1 | | | | | |
| 15 | 1WD–F5872–00 | HOSE, BRAKE 1<br>MANGUERA DE FRENO 1 | 1 | | | | | |
| 16 | 90401–10812 | BOLT, UNION<br>PERNO DE UNION | 2 | | | | | |
| 17 | 90201–10118 | WASHER, PLATE<br>ARANDELA PLANA | 4 | | | | | |
| 18 | 1WD–F5875–00 | HOLDER, BRAKE HOSE 1<br>SOPORTE DE MANGUERA FRENO 1 | 1 | | | | | |
| 19 | 95702–06500 | NUT, FLANGE<br>TUERCA DE BRIDA | 1 | | | | | |
| 20 | 1WD–F5876–00 | HOLDER, BRAKE HOSE 2<br>SOPORTE DE MANGUERA FRENO 2 | 1 | | | | | |

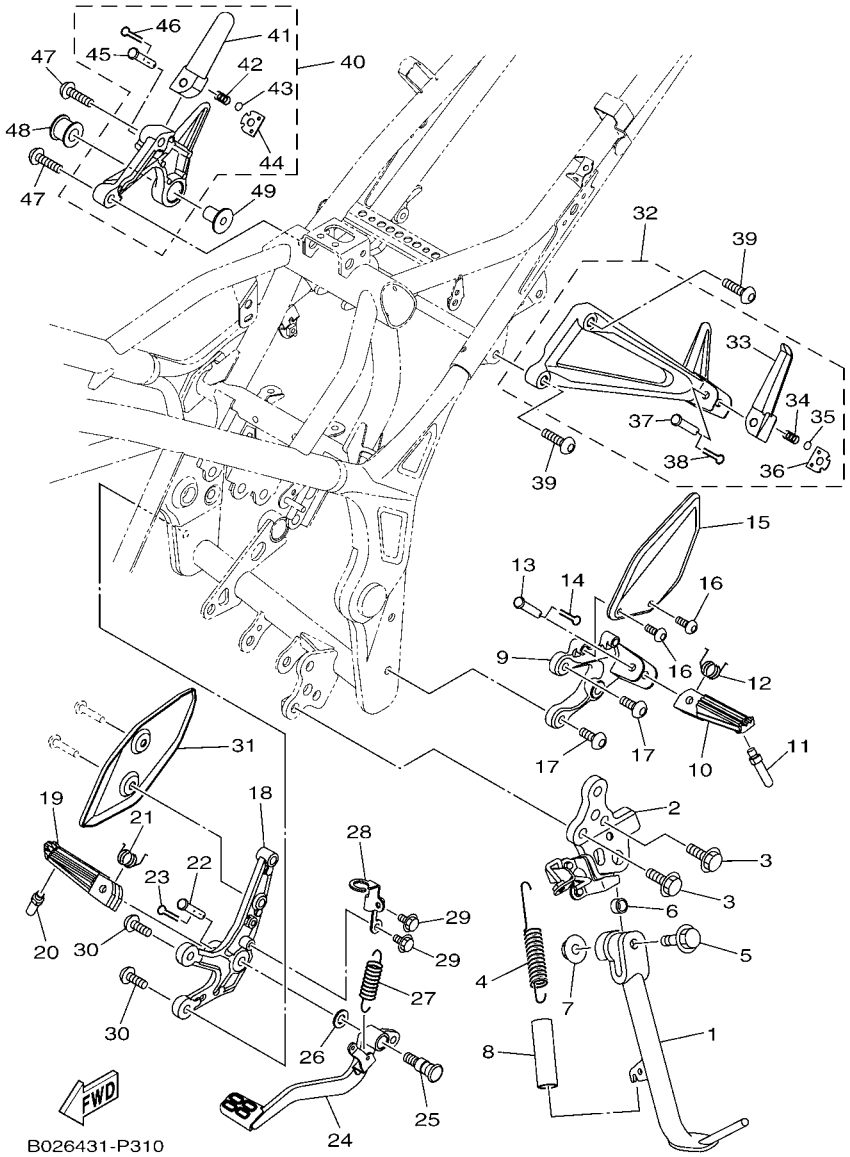


## FIG. 31 STAND & FOOTREST SOPORTE & APOYAPIE

| REF. NO. | PART NO. CODIGO Nº | DESCRIPTION DESCRIPCION | 2YP2 | | | | | REMARKS OBSERVACIONES |
|---|---|---|---|---|---|---|---|---|
| 1 | 1WD–F7311–00 | STAND, SIDE<br>PUNTAL LATERAL | 1 | | | | | |
| 2 | 1WD–F7321–10 | BRACKET, SIDE STAND<br>SOPORTE DE PUNTAL LATERAL | 1 | | | | | |
| 3 | 95817–10025 | BOLT, FLANGE<br>TORNILLO | 2 | | | | | |
| 4 | 90506–23812 | SPRING, TENSION<br>RESORTE DE TENSION | 1 | | | | | |
| 5 | 90105–106A7 | BOLT, FLANGE<br>TORNILLO | 1 | | | | | |
| 6 | 90387–10010 | COLLAR<br>ESPACIADOR | 1 | | | | | |
| 7 | 95602–10200 | NUT, U FLANGE<br>TUERCA DE AUTO-CIERRE | 1 | | | | | |
| 8 | 90445–217G3 | HOSE (L70)<br>TUBO (L70) | 1 | | | | | |
| 9 | 1WD–F7442–00 | BRACKET 2<br>SOPORTE 2 | 1 | | | | | |
| 10 | 1WD–F7451–00 | FOOTREST<br>APOYAPIE | 1 | | | | | |
| 11 | 1WD–F7435–00 | BOLT<br>PERNO | 1 | | | | | |
| 12 | 90508–183B9 | SPRING, TORSION<br>RESORTE DE TORSION | 1 | | | | | |
| 13 | 90240–08145 | PIN, CLEVIS<br>PASADOR CON HOYO | 1 | | | | | |
| 14 | 91401–25015 | PIN, COTTER<br>CHAVETA | 1 | | | | | |
| 15 | 2MS–F7445–00 | PLATE 1<br>PLACE 1 | 1 | | | | | |
| 16 | 90111–06013 | BOLT,HEX. SOCKET BUTTON<br>TORNILLO | 2 | | | | | |
| 17 | 90109–085G6 | BOLT<br>PERNO | 2 | | | | | |
| 18 | 1WD–F7443–00 | BRACKET 3<br>SOPORTE 3 | 1 | | | | | |
| 19 | 1WD–F7461–00 | FOOTREST<br>APOYAPIE | 1 | | | | | |
| 20 | 1WD–F7435–00 | BOLT<br>PERNO | 1 | | | | | |
| 21 | 90508–183B9 | SPRING, TORSION<br>RESORTE DE TORSION | 1 | | | | | |
| 22 | 90240–08145 | PIN, CLEVIS<br>PASADOR CON HOYO | 1 | | | | | |
| 23 | 91401–25015 | PIN, COTTER<br>CHAVETA | 1 | | | | | |
| 24 | 1WD–F7211–00 | PEDAL, BRAKE<br>PEDAL DE FRENO | 1 | | | | | |
| 25 | 4BP–27261–00 | SHAFT<br>EJE | 1 | | | | | |
| 26 | 90201–10021 | WASHER, PLATE<br>ARANDELA PLANA | 1 | | | | | |
| 27 | 90506–26807 | SPRING, TENSION<br>RESORTE DE TENSION | 1 | | | | | |

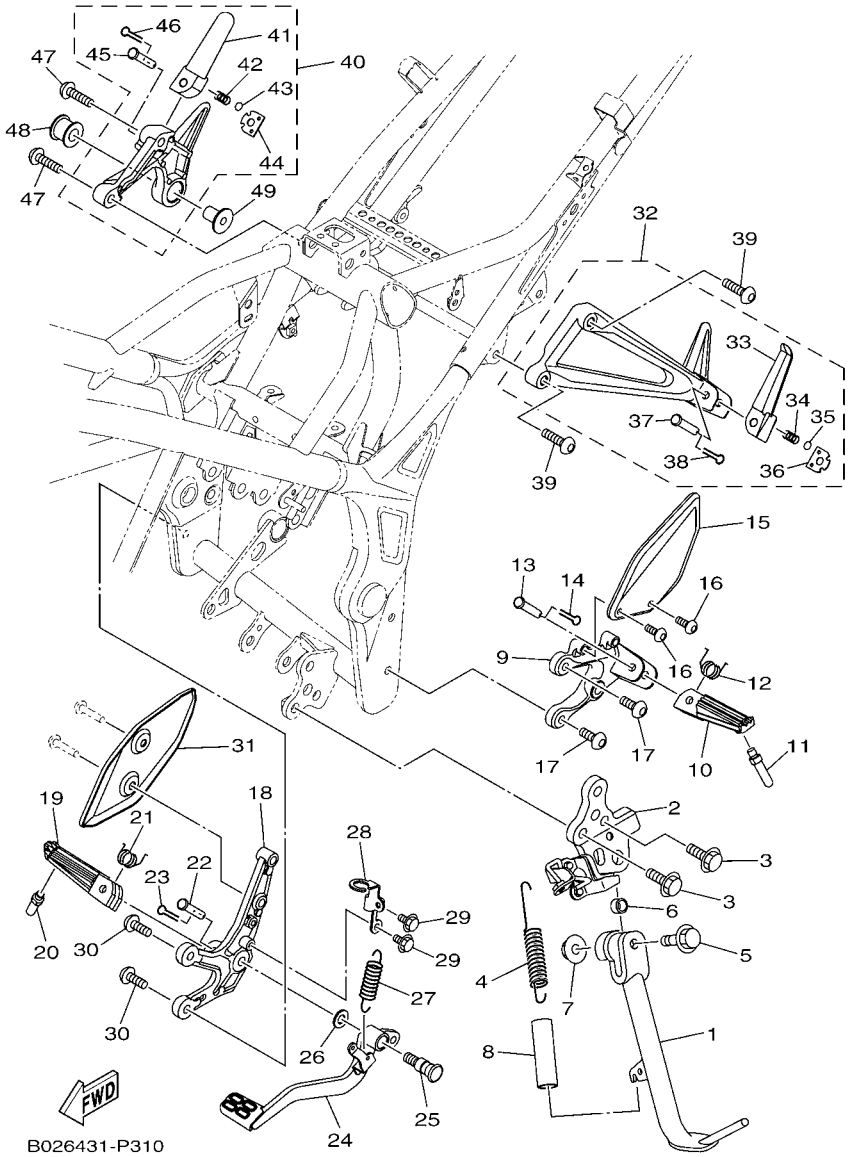


## FIG. 31 STAND & FOOTREST — SOPORTE & APOYAPIE

| REF. NO. | PART NO. CODIGO Nº | DESCRIPTION DESCRIPCION | 2YP2 | | | | | REMARKS OBSERVACIONES |
|---|---|---|---|---|---|---|---|---|
| 28 | 1WD–F144G–00 | STAY, STOP SWITCH<br>SOPORTE DE INTERRUPTOR | 1 | | | | | |
| 29 | 95802–06010 | BOLT, FLANGE<br>TORNILLO DE REBORDE | 2 | | | | | |
| 30 | 90109–085G6 | BOLT<br>PERNO | 2 | | | | | |
| 31 | 2MS–F7446–00 | PLATE 2<br>PLACE 2 | 1 | | | | | |
| 32 | 1WD–F7430–00 | REAR FOOTREST ASSY 1<br>APOYAPIE POSTERIOR COMPLETO 1 | 1 | | | | | |
| 33 | 1WD–F7431–00 | .FOOTREST, REAR 1<br>.APOYAPIE POSTERIOR 1 | 1 | | | | | |
| 34 | 90501–12743 | .SPRING, COMPRESSION<br>.RESORTE DE COMPRESION | 1 | | | | | |
| 35 | 93501–04830 | .BALL<br>.BOLA | 1 | | | | | |
| 36 | 1WD–F7437–00 | .WASHER, SPECIAL<br>.ARANDELA ESPECIAL | 1 | | | | | |
| 37 | 90240–08145 | .PIN, CLEVIS<br>.PASADOR CON HOYO | 1 | | | | | |
| 38 | 91401–25015 | .PIN, COTTER<br>.CHAVETA | 1 | | | | | |
| 39 | 90110–08071 | BOLT, HEXAGON SOCKET HEAD<br>TORNILLO ALLEN | 2 | | | | | |
| 40 | 1WD–F7440–00 | REAR FOOTREST ASSY 2<br>APOYAPIE POSTERIOR COMPLETO 2 | 1 | | | | | |
| 41 | 1WD–F7441–00 | .FOOTREST, REAR 2<br>.APOYAPIE POSTERIOR 2 | 1 | | | | | |
| 42 | 90501–12743 | .SPRING, COMPRESSION<br>.RESORTE DE COMPRESION | 1 | | | | | |
| 43 | 93501–04830 | .BALL<br>.BOLA | 2 | | | | | |
| 44 | 1WD–F7437–00 | .WASHER, SPECIAL<br>.ARANDELA ESPECIAL | 1 | | | | | |
| 45 | 90240–08145 | .PIN, CLEVIS<br>.PASADOR CON HOYO | 1 | | | | | |
| 46 | 91401–25015 | .PIN, COTTER<br>.CHAVETA | 1 | | | | | |
| 47 | 90110–08071 | BOLT, HEXAGON SOCKET HEAD<br>TORNILLO ALLEN | 2 | | | | | |
| 48 | 5TP–E4747–00 | DAMPER, MUFFLER<br>AMORTIGUADOR DE SILENCIADOR | 1 | | | | | |
| 49 | 90387–08813 | COLLAR<br>ESPACIADOR | 1 | | | | | |

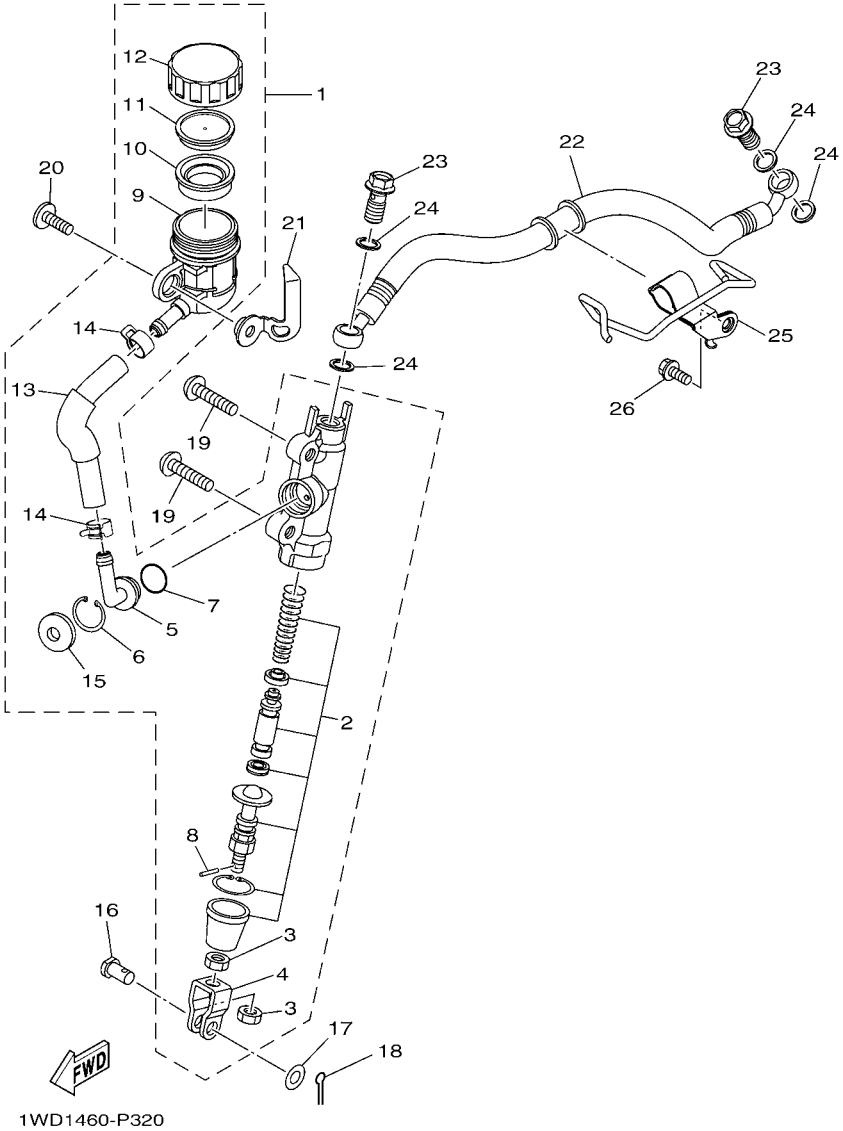


## FIG. 32 REAR MASTER CYLINDER CILINDRO MAESTRO TRASERO

| REF. NO. | PART NO. CODIGO Nº | DESCRIPTION DESCRIPCION | 2YP2 | | | | | REMARKS OBSERVACIONES |
|---|---|---|---|---|---|---|---|---|
| 1 | 1WD–F580E–00 | REAR MASTER CYLINDER ASSY<br>CYLINDRO MAESTRO TRASERO COMP | 1 | | | | | |
| 2 | 1WD–F5808–00 | .CYLINDER KIT, MASTER<br>.JUEGO DE CILINDRO MAESTRO | 1 | | | | | |
| 3 | 4SS–27218–00 | .NUT<br>.TUERCA | 2 | | | | | |
| 4 | 50C–F7222–00 | .JOINT<br>.UNION | 1 | | | | | |
| 5 | 50C–F582A–50 | .JOINT<br>.CONECTOR | 1 | | | | | |
| 6 | 50C–F5866–00 | .CIRCLIP<br>.PRESILLA REDONDA | 1 | | | | | |
| 7 | 93210–15620 | .O-RING<br>.ANILLO O | 1 | | | | | |
| 8 | 3KW–27234–00 | .PIN, BRAKE ROD<br>.PASADOR DE VARILLA DE FRENO | 1 | | | | | |
| 9 | 50C–F5894–10 | .TANK, RESERVOIR<br>.TANQUE DE RESERVA | 1 | | | | | |
| 10 | 2VN–F5854–00 | .DIAPHRAGM, RESERVOIR<br>.EMPAQUE,DIAFRAGMA | 1 | | | | | |
| 11 | 50C–F5855–00 | .BUSH,DIAPHRAGM<br>.BUJE DE DIAFRAGMA | 1 | | | | | |
| 12 | 1WD–F5852–50 | .CAP, RESERVOIR<br>.TAPA DE TANQUE DE RESERVA | 1 | | | | | |
| 13 | 1WD–F5895–50 | .HOSE, RESERVOIR<br>.MANGUERA DE TANQUE DE RESERVA | 1 | | | | | |
| 14 | 90467–12085 | .CLIP<br>.PRESILLA | 2 | | | | | |
| 15 | 50C–F589A–00 | .COVER, DUST<br>.CUBIERTA PARA POLVO | 1 | | | | | |
| 16 | 90240–08124 | PIN, CLEVIS<br>PASADOR CON HOYO | 1 | | | | | |
| 17 | 90201–08083 | WASHER, PLATE<br>ARANDELA PLANA | 1 | | | | | |
| 18 | 91401–20012 | PIN, COTTER<br>CHAVETA | 1 | | | | | |
| 19 | 92012–08030 | BOLT, BUTTON HEAD<br>PERNO | 2 | | | | | |
| 20 | 90111–06121 | BOLT,HEX. SOCKET BUTTON<br>TORNILLO | 1 | | | | | |
| 21 | 1WD–F582E–00 | HOLDER, RESERVE TANK<br>SOSTEN, TANQUE DE RESERVA | 1 | | | | | |
| 22 | 1WD–F5873–00 | HOSE, BRAKE 2<br>MANGUERA DE FRENO 2 | 1 | | | | | |
| 23 | 90401–10812 | BOLT, UNION<br>PERNO DE UNION | 2 | | | | | |
| 24 | 90201–10118 | WASHER, PLATE<br>ARANDELA PLANA | 4 | | | | | |
| 25 | 1WD–F5887–00 | HOLDER, BRAKE HOSE<br>SOPORTE DE MANGUERA FRENO | 1 | | | | | |
| 26 | 95827–06014 | BOLT, FLANGE<br>TORNILLO | 1 | | | | | |

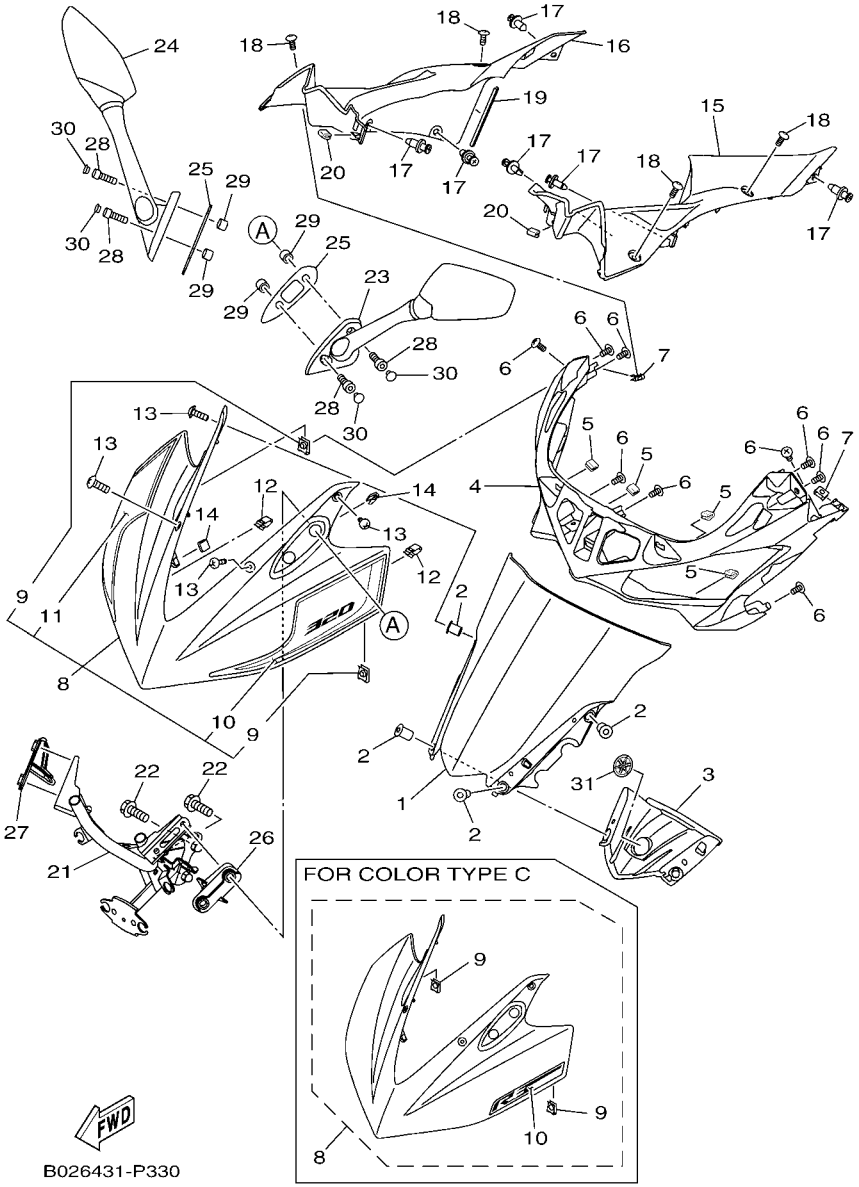


## FIG. 33 WINDSHIELD PARABRISAS

| REF. NO. | PART NO. CODIGO Nº | DESCRIPTION DESCRIPCION | 2YP2 | | | | | REMARKS OBSERVACIONES |
|---|---|---|---|---|---|---|---|---|
| 1 | 1WD–F8381–00 | WINDSHIELD<br>PARABRISA | 1 | | | | | |
| 2 | 90179–05849 | NUT<br>TUERCA | 4 | | | | | |
| 3 | 1WD–H3559–00 | COVER, METER<br>CUBIERTA DE MEDIDOR | 1 | | | | | |
| 4 | 1WD–F835G–00 | BODY, FRONT UPPER 1<br>CARROCERIA, DELANT. SUP. 1 | 1 | | | | | |
| 5 | 1WD–F8376–00 | TRIM<br>ADORNO | 4 | | | | | |
| 6 | 97702–50016 | SCREW, TAPPING<br>TORNILLO ROSCA HEMBRA | 9 | | | | | |
| 7 | 90183–050A7 | NUT, SPRING<br>TUERCA DE RESORTE | 2 | | | | | |
| 8 | 1WD–XF83F–40–P1 | BODY COWLING SUB ASSY<br>CUERPO, DE COBERTURE | 1 | | | | | UR FOR DPBMC<br>UR PARA DPBMC |
| | 1WD–XF83F–10–P0 | BODY COWLING SUB ASSY<br>CUERPO, DE COBERTURE | 1 | | | | | UR FOR SMX<br>UR PARA SMX |
| | 1WD–XF83F–20–P2 | BODY COWLING SUB ASSY<br>CUERPO, DE COBERTURE | 1 | | | | | UR FOR VRC1<br>UR PARA VRC1 |
| 9 | 90183–05807 | .NUT, SPRING<br>.TUERCA DE RESORTE | 2 | | | | | |
| 10 | 2MS–F8391–00 | .GRAPHIC 1<br>.CALCOMANIA 1 | 1 | | | | | UR FOR DPBMC<br>UR PARA DPBMC |
| | 2MS–F8391–10 | .GRAPHIC 1<br>.CALCOMANIA 1 | 1 | | | | | UR FOR VRC1<br>UR PARA VRC1 |
| 11 | 1WD–F8392–00 | .GRAPHIC 2<br>.CALCOMANIA 2 | 1 | | | | | FOR DPBMC<br>PARA DPBMC |
| 12 | 44D–F8379–00 | HOOK<br>GANCHO | 2 | | | | | |
| 13 | 90150–05023 | SCREW, ROUND HEAD<br>TORNILLO CABEZA REDONDA | 4 | | | | | |
| 14 | 1WD–F8376–00 | TRIM<br>ADORNO | 2 | | | | | |
| 15 | 1WD–F836N–00 | PANEL, INNER 4<br>PANEL 4 | 1 | | | | | |
| 16 | 1WD–F836R–00 | PANEL, INNER 5<br>PANEL 5 | 1 | | | | | |
| 17 | 90269–06081 | RIVET<br>REMACHE | 6 | | | | | |
| 18 | 90111–05003 | BOLT,HEX. SOCKET BUTTON<br>TORNILLO | 4 | | | | | |
| 19 | 1WD–F1278–00 | MOLD<br>MOLDURA | 1 | | | | | |
| 20 | 1WD–F8376–00 | TRIM<br>ADORNO | 2 | | | | | |
| 21 | 1WD–F8356–00 | STAY 1<br>SOPORTE 1 | 1 | | | | | |
| 22 | 95812–08035 | BOLT, FLANGE<br>TORNILLO DE REBORDE | 2 | | | | | |
| 23 | 1WD–F6280–10 | REAR VIEW MIRROR ASSY (LEFT)<br>ESPEJO COMPLETO (IZQUIERDO) | 1 | | | | | |
| 24 | 1WD–F6290–10 | REAR VIEW MIRROR ASSY (RIGHT)<br>ESPEJO COMPLETO (DERECHO) | 1 | | | | | |

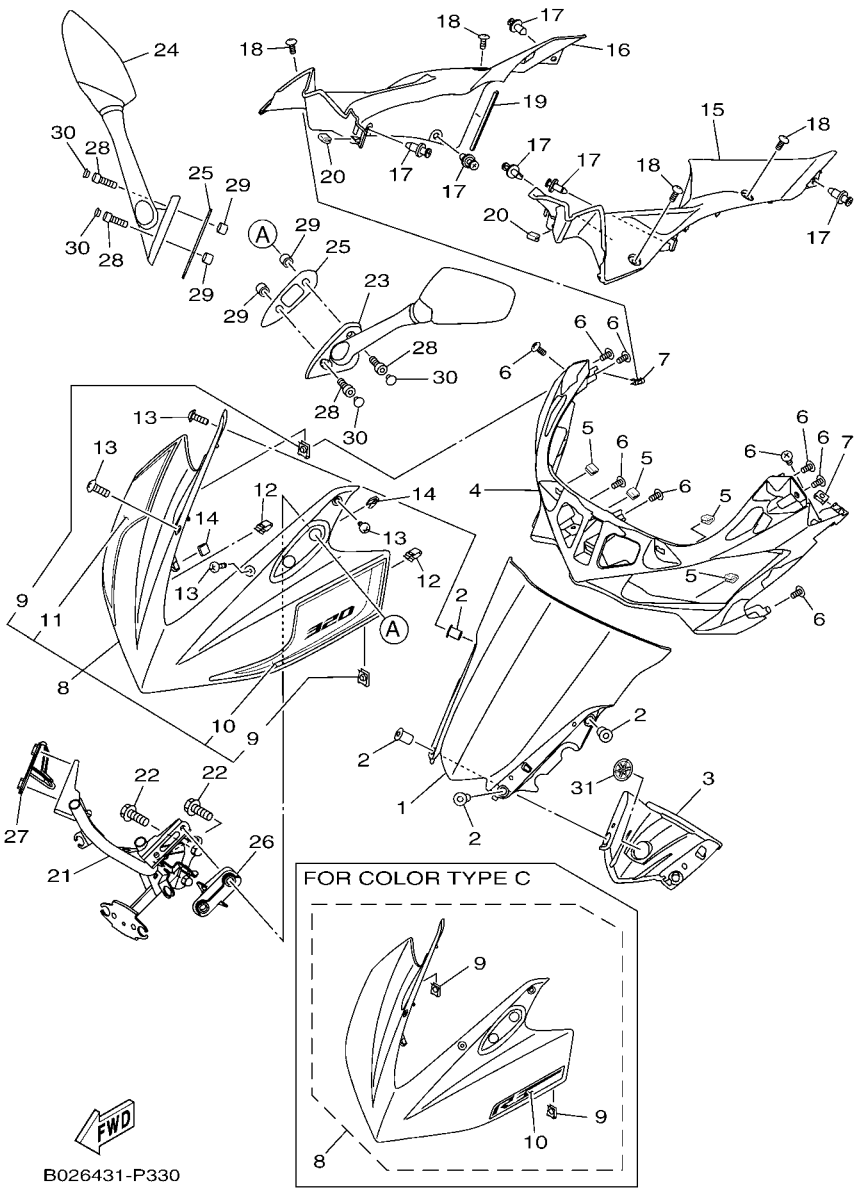


## FIG. 33 WINDSHIELD PARABRISAS

| REF. NO. | PART NO. CODIGO Nº | DESCRIPTION DESCRIPCION | 2YP2 | | | | | REMARKS OBSERVACIONES |
|---|---|---|---|---|---|---|---|---|
| 25 | 1WD–F8483–00 | PLATE, RUBBER 1<br>PLACA 1 | 2 | | | | | |
| 26 | 1WD–F8484–00 | PLATE, RUBBER 2<br>PLACA 2 | 1 | | | | | |
| 27 | 1WD–F8485–00 | PLATE, RUBBER 3<br>PLACA 3 | 1 | | | | | |
| 28 | 91317–06025 | BOLT<br>PERNO | 4 | | | | | |
| 29 | 90387–068C2 | COLLAR<br>ESPACIADOR | 4 | | | | | |
| 30 | 90338–05010 | PLUG<br>TAPON | 4 | | | | | |
| 31 | 1PA–F836B–00 | TUNING FORK MARK<br>MARCA | 1 | | | | | |

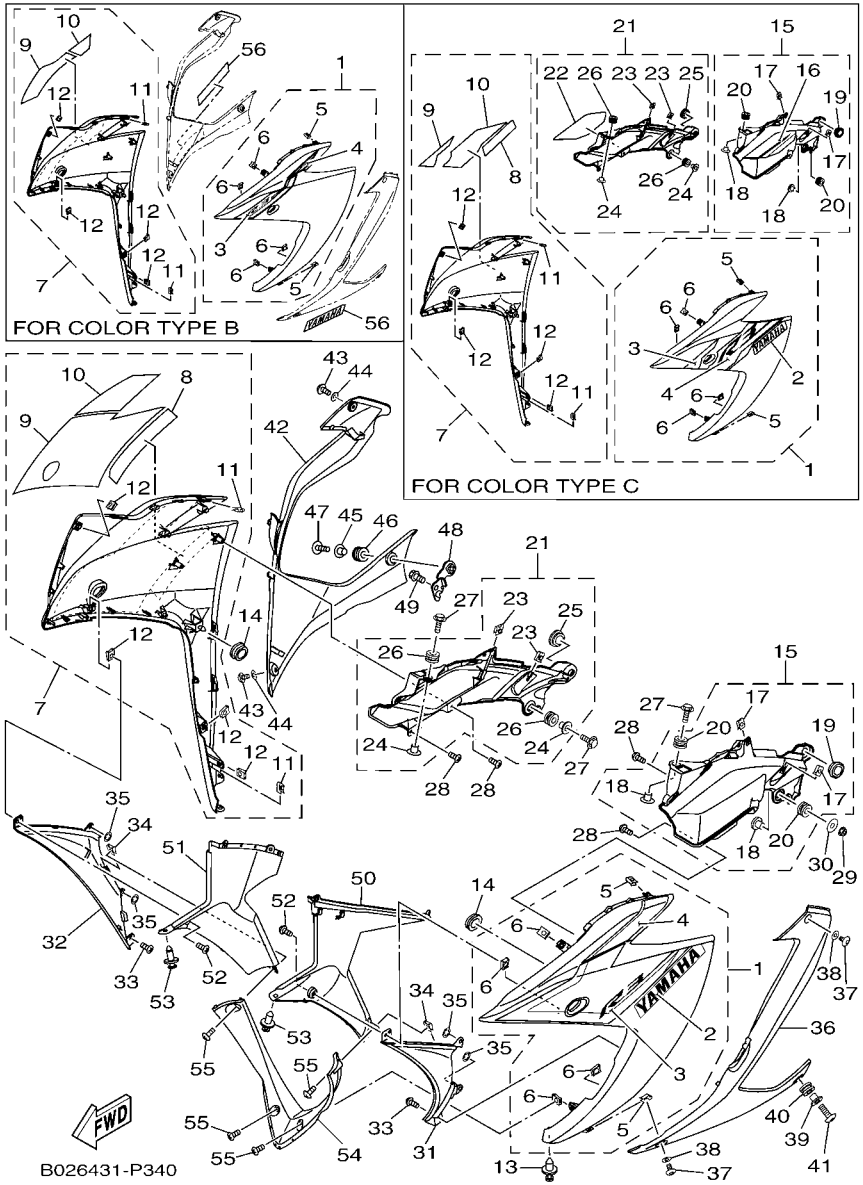


## FIG. 34 COWLING 1 BOVEDA 1

| REF. NO. | PART NO. CODIGO Nº | DESCRIPTION DESCRIPCION | 2YP2 | | | | | REMARKS OBSERVACIONES |
|---|---|---|---|---|---|---|---|---|
| 1 | 1WD–XF83L–30–P1 | BODY, FR. UNDER 1 SUB ASSY<br>CARROCERIA, DELANT. SUP. 1 | 1 | | | | | UR MS1 FOR DPBMC<br>UR MS1 PARA DPBMC |
| | 1WD–XF83L–40–P0 | BODY, FR. UNDER 1 SUB ASSY<br>CARROCERIA, DELANT. SUP. 1 | 1 | | | | | UR FOR SMX<br>UR PARA SMX |
| | 1WD–XF83L–60–P2 | BODY, FR. UNDER 1 SUB ASSY<br>CARROCERIA, DELANT. SUP. 1 | 1 | | | | | UR WM6 FOR VRC1<br>UR WM6 PARA VRC1 |
| 2 | 1WD–F8328–00 | .EMBLEM<br>.EMBLEMA | 2 | | | | | UR FOR DPBMC<br>UR PARA DPBMC |
| | 1WD–F8328–10 | .EMBLEM<br>.EMBLEMA | 2 | | | | | UR FOR VRC1<br>UR PARA VRC1 |
| 3 | 2MS–F8393–00 | .GRAPHIC 3<br>.CALCOMANIA 3 | 1 | | | | | UR FOR DPBMC<br>UR PARA DPBMC |
| | 2MS–F8393–10 | .GRAPHIC 3<br>.CALCOMANIA 3 | 1 | | | | | UR FOR SMX<br>UR PARA SMX |
| | 1WD–F8393–20 | .GRAPHIC 3<br>.CALCOMANIA 3 | 1 | | | | | UR FOR VRC1<br>UR PARA VRC1 |
| 4 | 1WD–F8398–00 | .GRAPHIC 5<br>.GRAFICO 5 | 1 | | | | | UR FOR DPBMC<br>UR PARA DPBMC |
| | 1WD–F8398–10 | .GRAPHIC 5<br>.GRAFICO 5 | 1 | | | | | UR FOR SMX<br>UR PARA SMX |
| | 2MS–F8398–00 | .GRAPHIC 5<br>.GRAFICO 5 | 1 | | | | | UR FOR VRC1<br>UR PARA VRC1 |
| 5 | 90183–05807 | .NUT, SPRING<br>.TUERCA DE RESORTE | 4 | | | | | |
| 6 | 90183–050A7 | .NUT, SPRING<br>.TUERCA DE RESORTE | 2 | | | | | |
| 7 | 1WD–XF83M–30–P1 | BODY, FR. UNDER 2 SUB ASSY<br>CARROCERIA, DELANT. SUP. 2 | 1 | | | | | UR MS1 FOR DPBMC<br>UR MS1 PARA DPBMC |
| | 1WD–XF83M–40–P0 | BODY, FR. UNDER 2 SUB ASSY<br>CARROCERIA, DELANT. SUP. 2 | 1 | | | | | UR FOR SMX<br>UR PARA SMX |
| | 1WD–XF83M–60–P2 | BODY, FR. UNDER 2 SUB ASSY<br>CARROCERIA, DELANT. SUP. 2 | 1 | | | | | UR WM6 FOR VRC1<br>UR WM6 PARA VRC1 |
| 8 | 1WD–F8328–00 | .EMBLEM<br>.EMBLEMA | 1 | | | | | UR FOR DPBMC<br>UR PARA DPBMC |
| | 1WD–F8328–10 | .EMBLEM<br>.EMBLEMA | 1 | | | | | UR FOR VRC1<br>UR PARA VRC1 |
| 9 | 2MS–F8394–00 | .GRAPHIC 4<br>.CALCOMANIA 4 | 1 | | | | | UR FOR DPBMC<br>UR PARA DPBMC |
| | 2MS–F8394–10 | .GRAPHIC 4<br>.CALCOMANIA 4 | 1 | | | | | UR FOR SMX<br>UR PARA SMX |
| | 1WD–F8394–20 | .GRAPHIC 4<br>.CALCOMANIA 4 | 1 | | | | | UR FOR VRC1<br>UR PARA VRC1 |
| 10 | 1WD–F8399–00 | .GRAPHIC 6<br>.CALCOMANIA 6 | 1 | | | | | UR FOR DPBMC<br>UR PARA DPBMC |
| | 1WD–F8399–10 | .GRAPHIC 6<br>.CALCOMANIA 6 | 1 | | | | | UR FOR SMX<br>UR PARA SMX |
| | 2MS–F8399–00 | .GRAPHIC 6<br>.CALCOMANIA 6 | 1 | | | | | UR FOR VRC1<br>UR PARA VRC1 |
| 11 | 90183–050A7 | .NUT, SPRING<br>.TUERCA DE RESORTE | 2 | | | | | |
| 12 | 90183–05807 | .NUT, SPRING<br>.TUERCA DE RESORTE | 4 | | | | | |
| 13 | 90269–06081 | RIVET<br>REMACHE | 1 | | | | | |

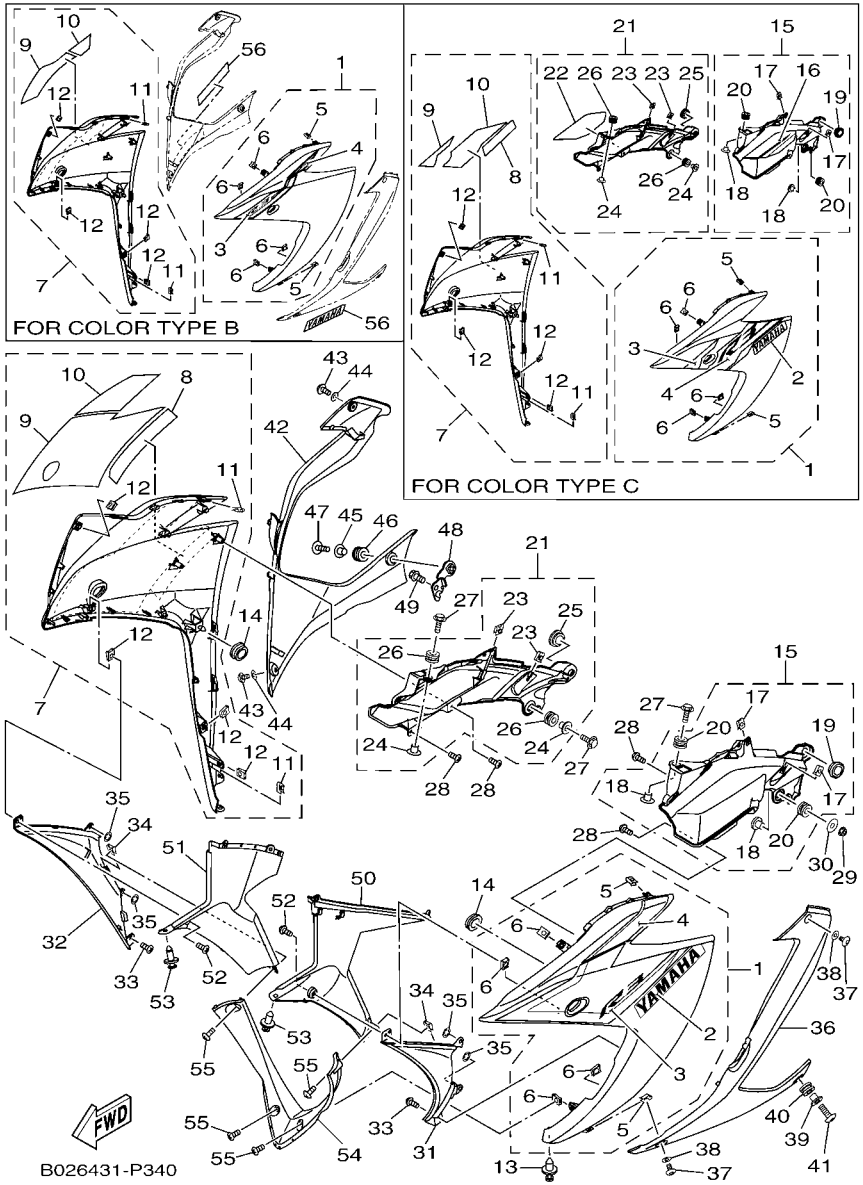


## FIG. 34 COWLING 1 BOVEDA 1

| REF. NO. | PART NO. CODIGO Nº | DESCRIPTION DESCRIPCION | 2YP2 | | | | | REMARKS OBSERVACIONES |
|---|---|---|---|---|---|---|---|---|
| 14 | 90480–01558 | GROMMET<br>TAPON | 2 | | | | | |
| 15 | 1WD–XF11W–10–P0 | COVER 7<br>CUBIERTA 7 | 1 | | | | | MBL2(DPBMC,SMX)<br>MBL2(DPBMC,SMX) |
| | 1WD–XF11W–50–P0 | COVER 7<br>CUBIERTA 7 | 1 | | | | | MBL2(VRC1)<br>MBL2(VRC1) |
| 16 | 2MS–F83GA–00 | .GRAPHIC, 7<br>.CALCOMANIA 7 | 1 | | | | | FOR DPBMC<br>PARA DPBMC |
| 17 | 90183–050A7 | .NUT, SPRING<br>.TUERCA DE RESORTE | 2 | | | | | |
| 18 | 90387–06899 | .COLLAR<br>.ESPACIADOR | 2 | | | | | |
| 19 | 90480–01558 | .GROMMET<br>.TAPON | 1 | | | | | |
| 20 | 90480–12808 | .GROMMET<br>.TAPON | 2 | | | | | |
| 21 | 1WD–XF11X–10–P0 | COVER 8<br>CUBIERTA 8 | 1 | | | | | MBL2(DPBMC,SMX)<br>MBL2(DPBMC,SMX) |
| | 1WD–XF11X–60–P0 | COVER 8<br>CUBIERTA 8 | 1 | | | | | MBL2(VRC1)<br>MBL2(VRC1) |
| 22 | 2MS–F83GB–00 | .GRAPHIC, 8<br>.CALCOMANIA 8 | 1 | | | | | FOR DPBMC<br>PARA DPBMC |
| 23 | 90183–050A7 | .NUT, SPRING<br>.TUERCA DE RESORTE | 2 | | | | | |
| 24 | 90387–06899 | .COLLAR<br>.ESPACIADOR | 2 | | | | | |
| 25 | 90480–01558 | .GROMMET<br>.TAPON | 1 | | | | | |
| 26 | 90480–12808 | .GROMMET<br>.TAPON | 2 | | | | | |
| 27 | 90119–06810 | BOLT, WITH WASHER<br>TORNILLO CON ARANDELA | 3 | | | | | |
| 28 | 97707–50016 | SCREW, TRUSS HEAD TAPPING<br>TORNILLO | 4 | | | | | |
| 29 | 95702–06500 | NUT, FLANGE<br>TUERCA DE BRIDA | 1 | | | | | |
| 30 | 90201–06380 | WASHER PLAIN<br>ARANDELA PLANA | 1 | | | | | |
| 31 | 1WD–F835U–00–P0 | PANEL 1<br>PANEL 1 | 1 | | | | | MBL2<br>MBL2 |
| 32 | 1WD–F835V–00–P0 | PANEL 2<br>PANEL 2 | 1 | | | | | MBL2<br>MBL2 |
| 33 | 97707–50016 | SCREW, TRUSS HEAD TAPPING<br>TORNILLO | 2 | | | | | |
| 34 | 90183–05807 | NUT, SPRING<br>TUERCA DE RESORTE | 2 | | | | | |
| 35 | 90183–06815 | NUT, SPRING<br>TUERCA DE RESORTE | 4 | | | | | |
| 36 | 1WD–F8385–00–P0 | COVER, UNDER<br>CUBIERTA INFERIOR | 1 | | | | | MBL2<br>MBL2 |
| 37 | 90111–05003 | BOLT,HEX. SOCKET BUTTON<br>TORNILLO | 2 | | | | | |
| 38 | 90202–05180 | WASHER, PLATE<br>ARANDELA DE PLANA | 2 | | | | | |

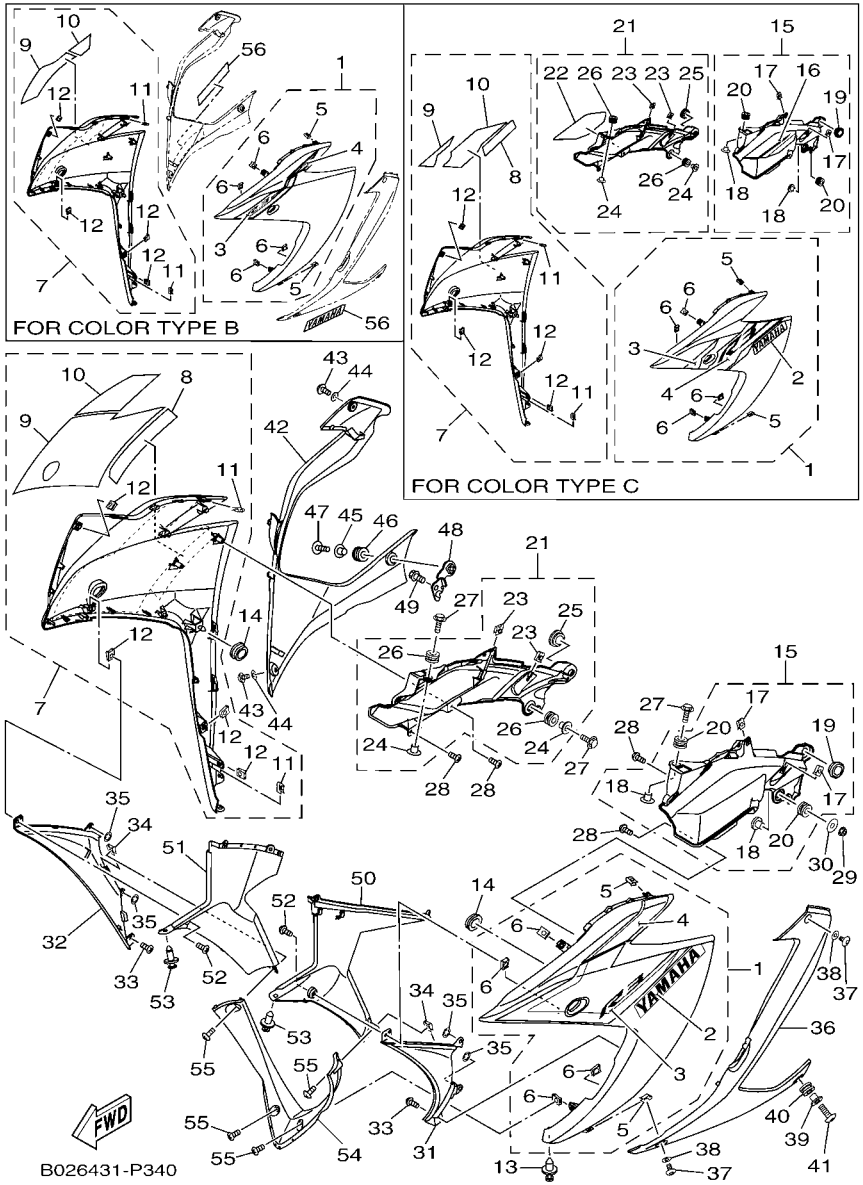


## FIG. 34 COWLING 1 — BOVEDA 1

| REF. NO. | PART NO. CODIGO Nº | DESCRIPTION DESCRIPCION | 2YP2 | | | | | REMARKS OBSERVACIONES |
|---|---|---|---|---|---|---|---|---|
| 39 | 90387–06899 | COLLAR<br>ESPACIADOR | 1 | | | | | |
| 40 | 90480–12808 | GROMMET<br>TAPON | 1 | | | | | |
| 41 | 90111–06117 | BOLT,HEX. SOCKET BUTTON<br>TORNILLO | 1 | | | | | |
| 42 | 1WD–F8395–00–P0 | COVER, UNDER 2<br>CUBIERTA INFERIOR | 1 | | | | | MBL2<br>MBL2 |
| 43 | 90111–05003 | BOLT,HEX. SOCKET BUTTON<br>TORNILLO | 2 | | | | | |
| 44 | 90202–05180 | WASHER, PLATE<br>ARANDELA DE PLANA | 2 | | | | | |
| 45 | 90387–06899 | COLLAR<br>ESPACIADOR | 1 | | | | | |
| 46 | 90480–12808 | GROMMET<br>TAPON | 1 | | | | | |
| 47 | 90111–06117 | BOLT,HEX. SOCKET BUTTON<br>TORNILLO | 1 | | | | | |
| 48 | 1WD–F833E–00 | BRACKET 8<br>SOPORTE 8 | 1 | | | | | |
| 49 | 95022–06012 | BOLT, FLANGE<br>PERNO, DE BRIDA | 1 | | | | | |
| 50 | 1WD–F836K–00 | PANEL, INNER 1<br>PANEL 1 | 1 | | | | | |
| 51 | 1WD–F836L–00 | PANEL, INNER 2<br>PANEL 2 | 1 | | | | | |
| 52 | 97707–50016 | SCREW, TRUSS HEAD TAPPING<br>TORNILLO | 2 | | | | | |
| 53 | 90269–06081 | RIVET<br>REMACHE | 2 | | | | | |
| 54 | 1WD–F836M–00 | PANEL, INNER 3<br>PANEL 3 | 1 | | | | | |
| 55 | 97707–50016 | SCREW, TRUSS HEAD TAPPING<br>TORNILLO | 4 | | | | | |
| 56 | 1WD–F8328–20 | EMBLEM<br>EMBLEMA | 2 | | | | | FOR SMX<br>PARA SMX |

## FIG. 35 GENERATOR GENERADOR

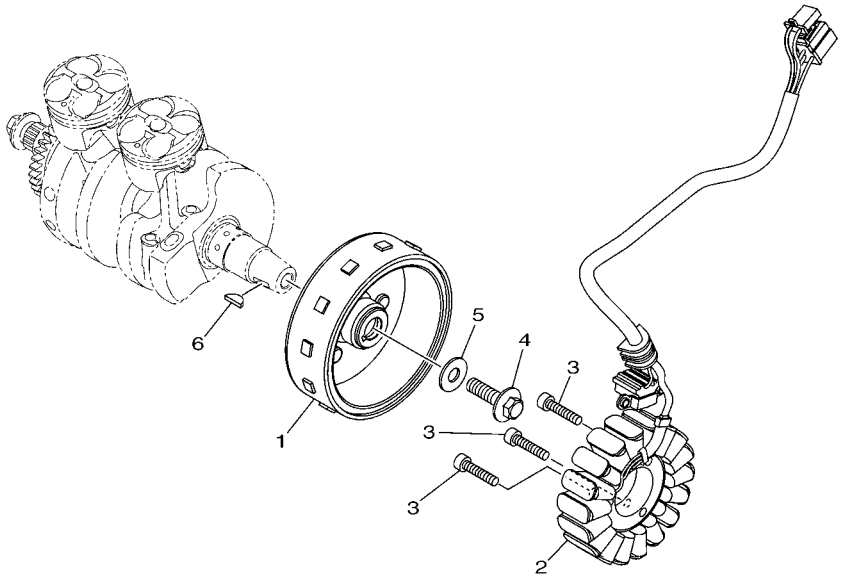

1WD1460-P350

| REF. NO. | PART NO. CODIGO Nº | DESCRIPTION DESCRIPCION | 2YP2 | | | | | REMARKS OBSERVACIONES |
|---|---|---|---|---|---|---|---|---|
| 1 | 1WD–H1450–00 | ROTOR ASSY<br>ROTOR COMPLETO | 1 | | | | | |
| 2 | 1WD–H1410–00 | STATOR ASSY<br>ESTATOR COMPLETO | 1 | | | | | |
| 3 | 91312–06030 | BOLT<br>TORNILLO | 3 | | | | | |
| 4 | 90105–10883 | BOLT, FLANGE<br>TORNILLO | 1 | | | | | |
| 5 | 90201–102R1 | WASHER, PLATE<br>ARANDELA PLANA | 1 | | | | | |
| 6 | 90280–05013 | KEY, WOODRUFF<br>CUNA WOODRUFF | 1 | | | | | |

## FIG. 36 STARTING MOTOR MOTOR DE ARRANQUE

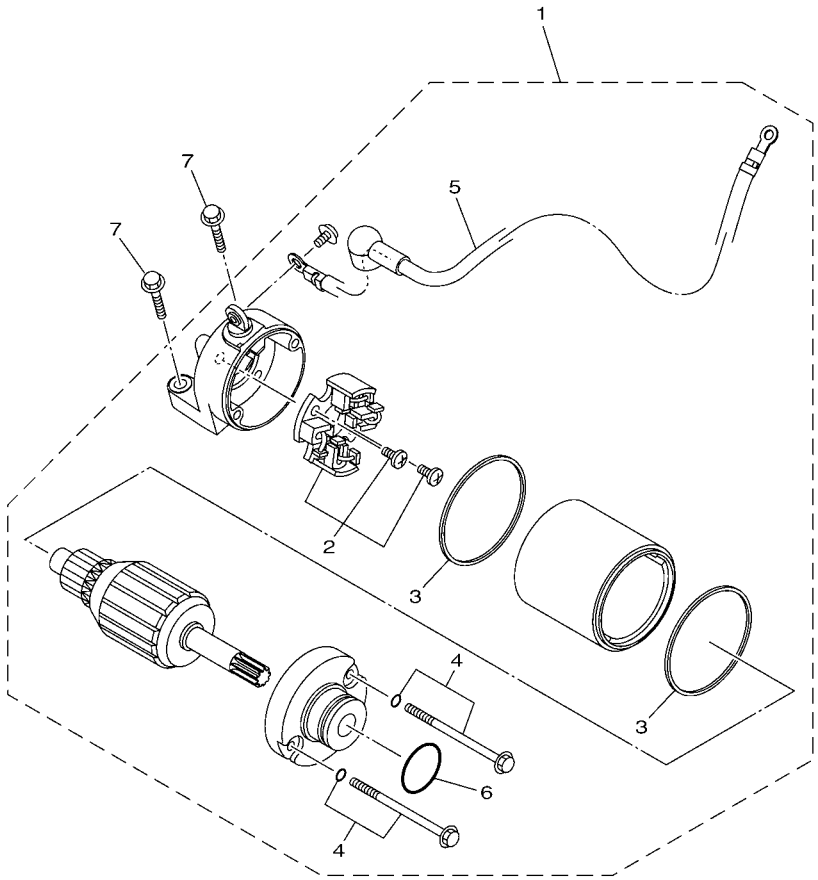


1WD1460-P360

| REF. NO. | PART NO. CODIGO Nº | DESCRIPTION DESCRIPCION | 2YP2 | | | | | REMARKS OBSERVACIONES |
|---|---|---|---|---|---|---|---|---|
| 1 | 1WD–H1800–00 | STARTING MOTOR ASSY<br>MOTOR DE ARRANQUE COMPLETO | 1 | | | | | |
| 2 | 1WD–H1801–00 | .BRUSH SET<br>.JUEGO DE ESCOBILLA | 1 | | | | | |
| 3 | 1WD–H1861–00 | .GASKET<br>.EMPAQUETADURA | 2 | | | | | |
| 4 | 1WD–H1828–00 | .SCREW 2<br>.TORNILLO DE EMPUJE 2 | 2 | | | | | |
| 5 | 1WD–H183G–00 | .CORD COMP.<br>.CABLE DEL MOTOR COMPL. | 1 | | | | | |
| 6 | 4FP–H182L–00 | .O-RING 1<br>.ANILLO EN O | 1 | | | | | |
| 7 | 95022–06025 | BOLT, FLANGE<br>PERNO, DE BRIDA | 2 | | | | | |

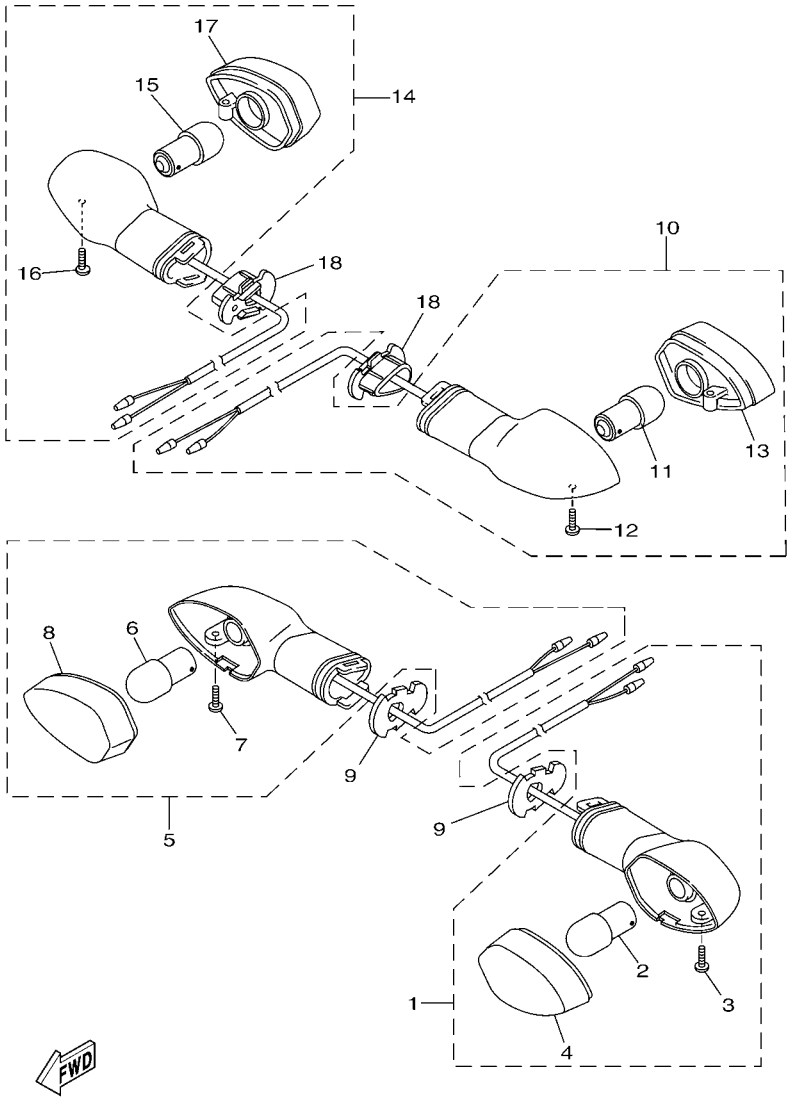


## FIG. 37 FLASHER LIGHT LUZ DE DESTELLADOR

| REF. NO. | PART NO. CODIGO Nº | DESCRIPTION DESCRIPCION | 2YP2 | | | | | REMARKS OBSERVACIONES |
|---|---|---|---|---|---|---|---|---|
| 1 | 1WD–H3310–10 | FRONT FLASHER LIGHT ASSY 1<br>DESTELLADOR DE LUZ DELANT. | 1 | | | | | |
| 2 | 1KB–83311–00 | .BULB, FLASHER (12V-10W)<br>.BOMBILLA (12V-10W) | 1 | | | | | |
| 3 | 3D9–H3333–10 | .SCREW, LENS FITTING<br>.TORNILLO ACCESORIO DE LENTE | 1 | | | | | |
| 4 | 1KB–8333A–00 | .LENS COMP 1<br>.LENTES COMPLETO 1 | 1 | | | | | |
| 5 | 1WD–H3320–10 | FRONT FLASHER LIGHT ASSY 2<br>DESTELLADOR DE LUZ DELANT. | 1 | | | | | |
| 6 | 1KB–83311–00 | .BULB, FLASHER (12V-10W)<br>.BOMBILLA (12V-10W) | 1 | | | | | |
| 7 | 3D9–H3333–10 | .SCREW, LENS FITTING<br>.TORNILLO ACCESORIO DE LENTE | 1 | | | | | |
| 8 | 1KB–8334A–00 | .LENS COMP 2<br>.LENTES COMPLETO 2 | 1 | | | | | |
| 9 | 3D7–83318–10 | STAY, FLASHER 1<br>SOPORTE DE DESTELLADOR 1 | 2 | | | | | |
| 10 | 1WD–H3330–10 | REAR FLASHER LIGHT ASSY 1<br>DESTELLADOR DE LUZ TRAS.COMPL. | 1 | | | | | |
| 11 | 1KB–83311–00 | .BULB, FLASHER (12V-10W)<br>.BOMBILLA (12V-10W) | 1 | | | | | |
| 12 | 3D9–H3333–10 | .SCREW, LENS FITTING<br>.TORNILLO ACCESORIO DE LENTE | 1 | | | | | |
| 13 | 1KB–8334A–00 | .LENS COMP 2<br>.LENTES COMPLETO 2 | 1 | | | | | |
| 14 | 1WD–H3340–10 | REAR FLASHER LIGHT ASSY 2<br>DESTELLADOR DE LUZ TRAS.COMPL. | 1 | | | | | |
| 15 | 1KB–83311–00 | .BULB, FLASHER (12V-10W)<br>.BOMBILLA (12V-10W) | 1 | | | | | |
| 16 | 3D9–H3333–10 | .SCREW, LENS FITTING<br>.TORNILLO ACCESORIO DE LENTE | 1 | | | | | |
| 17 | 1KB–8333A–00 | .LENS COMP 1<br>.LENTES COMPLETO 1 | 1 | | | | | |
| 18 | 1WD–H3318–00 | STAY, FLASHER 1<br>SOPORTE DE DESTELLADOR 1 | 2 | | | | | |

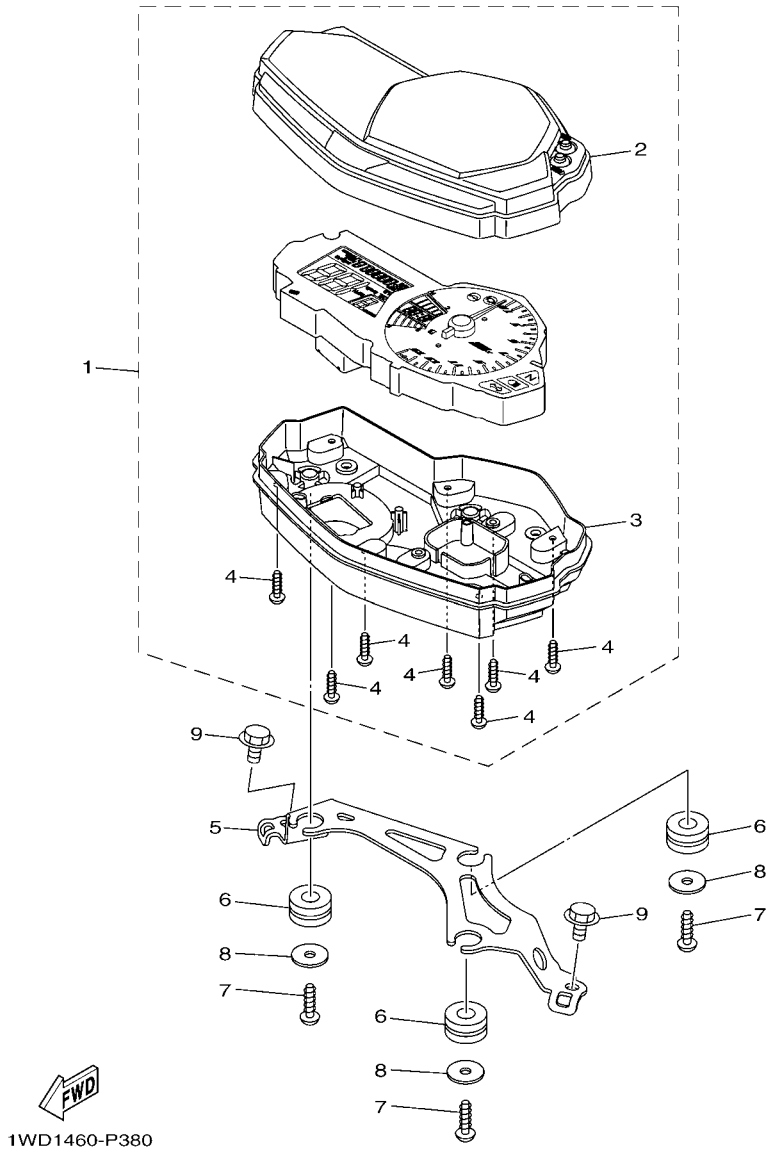


## FIG. 38 METER MEDIDOR

| REF. NO. | PART NO. CODIGO Nº | DESCRIPTION DESCRIPCION | 2YP2 | | | | | REMARKS OBSERVACIONES |
|---|---|---|---|---|---|---|---|---|
| 1 | 2MS–H3500–10 | METER ASSY<br>METRO COMPLETO | 1 | | | | | |
| 2 | 1WD–H3571–00 | .CASE, SPEEDOMETER UPPER<br>.CAJA DE VELOCIMETRO SUPERIOR | 1 | | | | | |
| 3 | 1WD–H3572–00 | .CASE, SPEEDOMETER LOWER<br>.CAJA DE VELOCIMETRO INFERIOR | 1 | | | | | |
| 4 | 97702–30016 | .SCREW, TAPPING<br>.TORNILLO ROSCA HEMBRA | 7 | | | | | |
| 5 | 1WD–H3519–00 | BRACKET, METER<br>SOPORTE DE MEDIDOR | 1 | | | | | |
| 6 | 90480–14004 | GROMMET<br>TAPON | 3 | | | | | |
| 7 | 97702–50016 | SCREW, TAPPING<br>TORNILLO ROSCA HEMBRA | 3 | | | | | |
| 8 | 90201–05827 | WASHER, PLATE<br>ARANDELA PLANA | 3 | | | | | |
| 9 | 95022–06010 | BOLT, FLANGE<br>PERNO, DE BRIDA | 2 | | | | | |

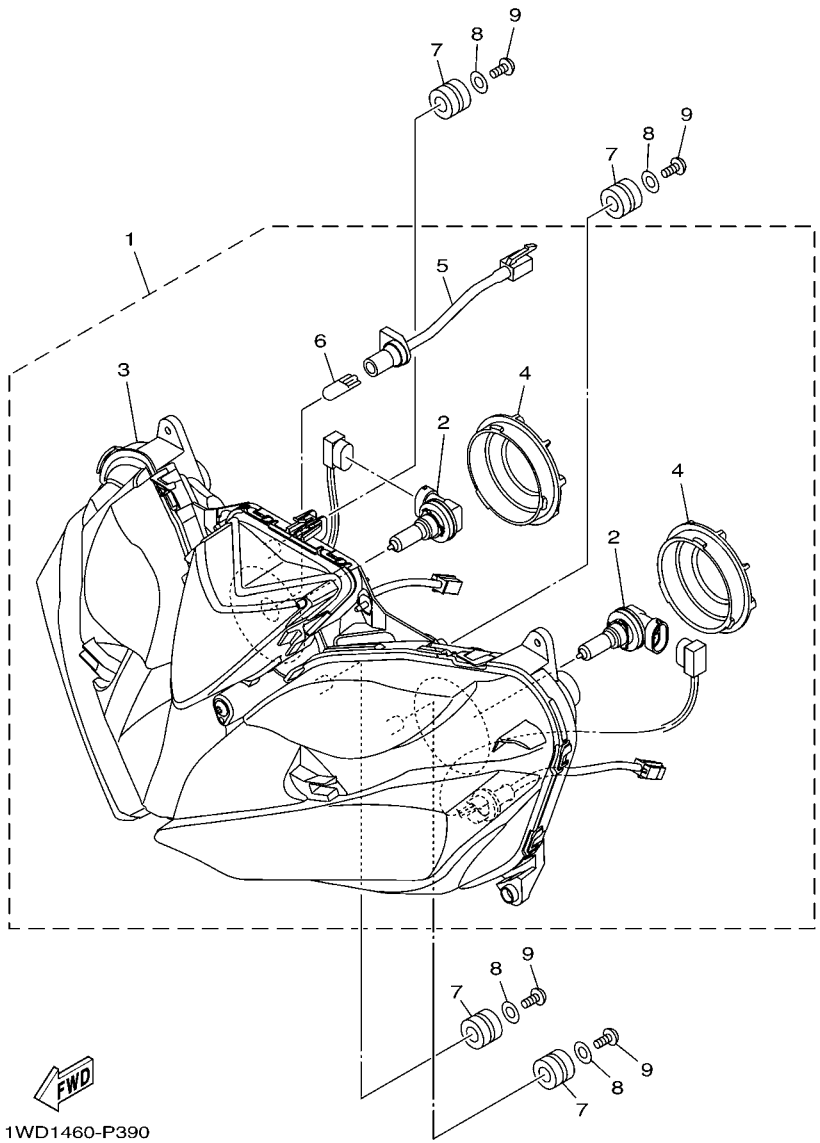


## FIG. 39 HEADLIGHT FARO DELANTERO

| REF. NO. | PART NO. CODIGO Nº | DESCRIPTION DESCRIPCION | 2YP2 | | | | | REMARKS OBSERVACIONES |
|---|---|---|---|---|---|---|---|---|
| 1 | 1WD–H4300–00 | HEADLIGHT ASSY<br>FARO DELANTERO COMPLETO | 1 | | | | | |
| 2 | 1WD–H4314–00 | .BULB (12V-55W)<br>.AMPOLLETA (12V-55W) | 2 | | | | | |
| 3 | 1WD–H4303–00 | .HEADLIGHT UNIT ASSY<br>.UNIDAD DE FARO DELANTERO COMPL | 1 | | | | | |
| 4 | 1WD–H4397–00 | .COVER, SOCKET<br>.CUBIERTA DE ENCASTRE | 2 | | | | | |
| 5 | 1WD–H4340–00 | .SOCKET CORD ASSY 1<br>.ENCASTRE DE CABLE COMPLETO | 1 | | | | | |
| 6 | 1WD–H4347–00 | .BULB (12V-5W)<br>.AMPOLLETA (12V-5W) | 1 | | | | | |
| 7 | 90480–14004 | GROMMET<br>TAPON | 4 | | | | | |
| 8 | 90201–05036 | WASHER, PLATE<br>ARANDELA PLANA | 4 | | | | | |
| 9 | 97707–50016 | SCREW, TRUSS HEAD TAPPING<br>TORNILLO | 4 | | | | | |

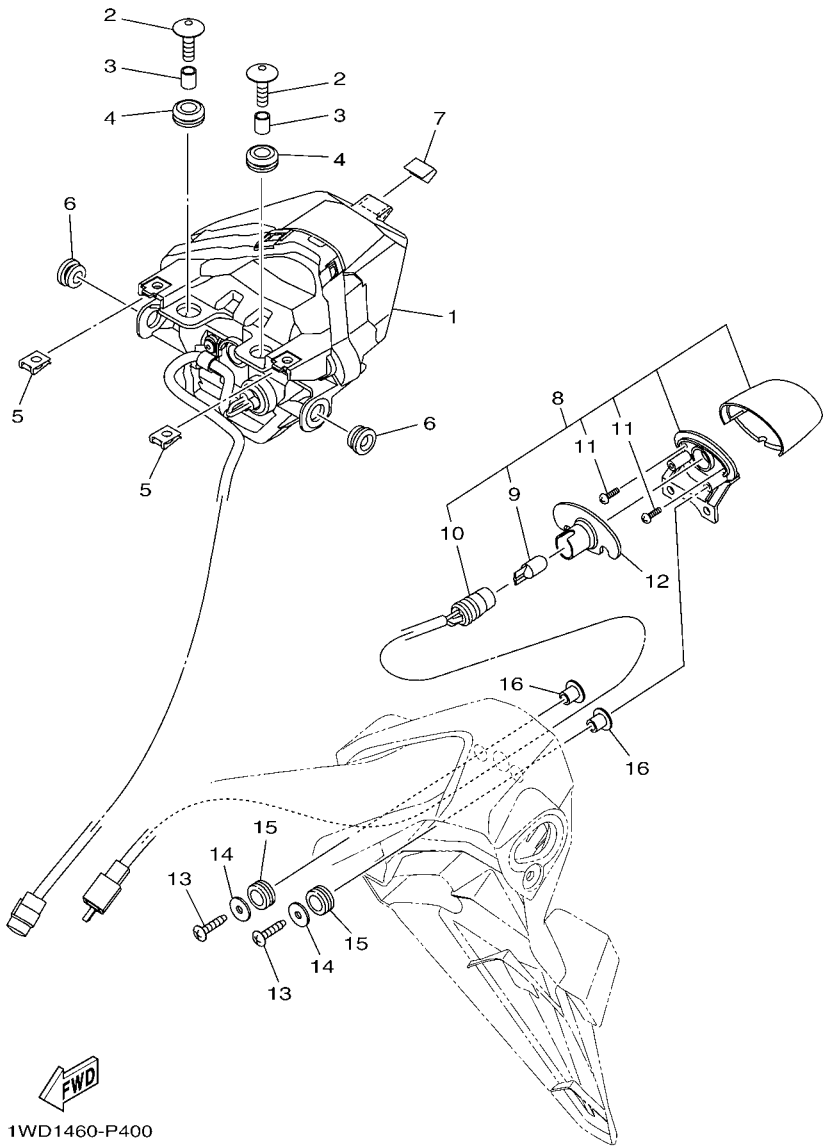


## FIG. 40 TAILLIGHT — LUZ DE COLA

| REF. NO. | PART NO. CODIGO Nº | DESCRIPTION DESCRIPCION | 2YP2 | | | | | REMARKS OBSERVACIONES |
|---|---|---|---|---|---|---|---|---|
| 1 | 1WD–H4710–01 | TAILLIGHT UNIT ASSY<br>UNIDAD FARO TRASERO COMPL. | 1 | | | | | |
| 2 | 90111–06117 | BOLT,HEX. SOCKET BUTTON<br>TORNILLO | 2 | | | | | |
| 3 | 90387–067V1 | COLLAR<br>ESPACIADOR | 2 | | | | | |
| 4 | 90480–13001 | GROMMET<br>TAPON | 2 | | | | | |
| 5 | 90183–05807 | NUT, SPRING<br>TUERCA DE RESORTE | 2 | | | | | |
| 6 | 90480–10003 | GROMMET<br>TAPON | 2 | | | | | |
| 7 | 1WD–F1732–00 | SEAL 1<br>SELLO 1 | 1 | | | | | |
| 8 | 1WD–H4740–00 | LICENCE LIGHT ASSY<br>LUZ DE LICENCIA COMPLETA | 1 | | | | | |
| 9 | 1WD–H4744–00 | .BULB (12V-5W)<br>.BOMBILLA (12V-5W) | 1 | | | | | |
| 10 | 1WD–H4547–00 | .CORD, LICENCE LIGHT<br>.CABLE DE LUZ DE LICENCIA | 1 | | | | | |
| 11 | 1WD–H4726–00 | .SCREW<br>.TORNILLO | 2 | | | | | |
| 12 | 1WD–H4753–00 | DAMPER<br>AMORTIGUADOR | 1 | | | | | |
| 13 | 97707–40020 | SCREW, TAPPING<br>TORNILLO ROSCA HEMBRA | 2 | | | | | |
| 14 | 90201–04804 | WASHER, PLATE<br>ARANDELA PLANA | 2 | | | | | |
| 15 | 90480–11009 | GROMMET<br>TAPON | 2 | | | | | |
| 16 | 90387–05042 | COLLAR<br>ESPACIADOR | 2 | | | | | |

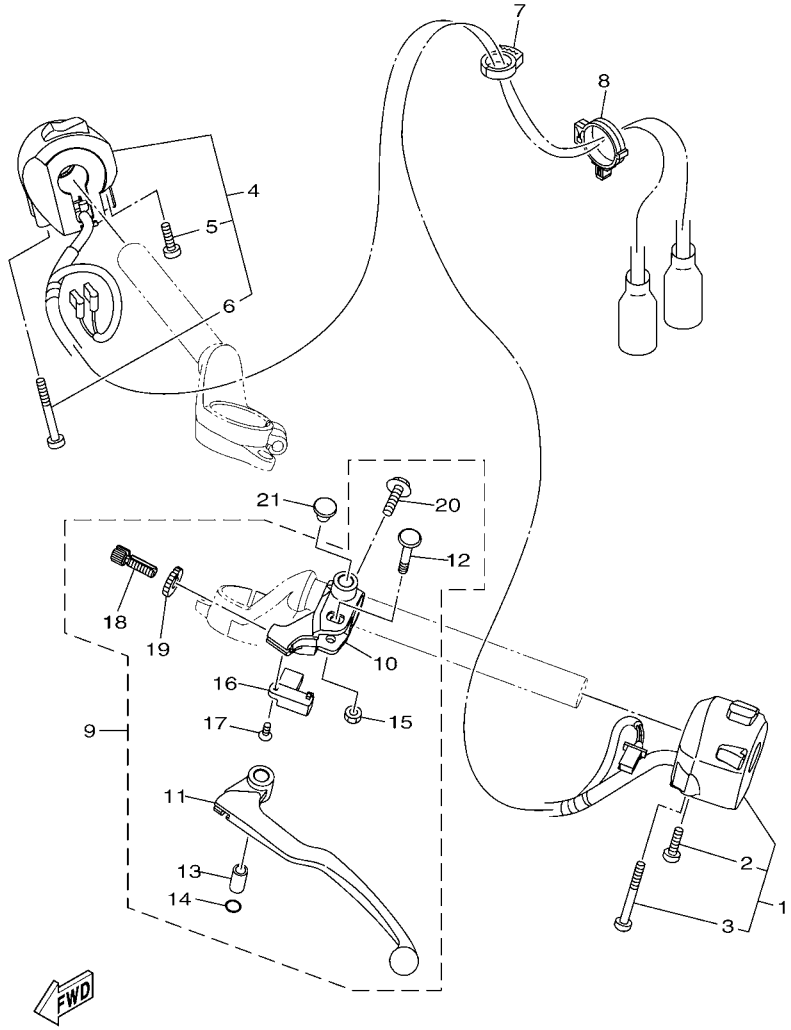


1WD1460-P410

## FIG. 41 HANDLE SWITCH & LEVER INTERRUPTOR DE MANILLAR&PALANC

| REF. NO. | PART NO. CODIGO Nº | DESCRIPTION DESCRIPCION | 2YP2 | | | | | REMARKS OBSERVACIONES |
|---|---|---|---|---|---|---|---|---|
| 1 | 1WD–H3972–00 | SWITCH, HANDLE 4<br>INTERRUPTOR DE MANIJA 4 | 1 | | | | | |
| 2 | 1WD–H2133–00 | .SCREW, FITTING<br>.TORNILLO ACCESORIO | 1 | | | | | |
| 3 | 1WD–H395W–00 | .SCREW, SWITCH FITTING<br>.TORNILLO, FIJACION | 1 | | | | | |
| 4 | 1WD–H3975–00 | SWITCH, HANDLE 2<br>INTERRUPTOR DE MANIJA 2 | 1 | | | | | |
| 5 | 45P–H2133–00 | .SCREW, FITTING<br>.TORNILLO ACCESORIO | 1 | | | | | |
| 6 | 45P–H395W–00 | .SCREW, SWITCH FITTING<br>.TORNILLO, FIJACION | 1 | | | | | |
| 7 | 90464–16003 | CLAMP<br>BRIDA | 1 | | | | | |
| 8 | 90464–30001 | CLAMP<br>BRIDA | 1 | | | | | |
| 9 | 1WD–H2910–00 | LEVER HOLDER ASSY (LEFT)<br>SOPORTE DE LEVA COMPLT 1 | 1 | | | | | |
| 10 | 1WD–H2911–00 | .HOLDER, LEVER 1<br>.SOPORTE DE LEVA 1 | 1 | | | | | |
| 11 | 1WD–H3912–00 | .LEVER 1<br>.PALANCA 1 | 1 | | | | | |
| 12 | 31A–83945–00 | .BOLT, LEVER<br>.PERNO DE PALANCA | 1 | | | | | |
| 13 | 31A–83913–00 | .COLLAR, LEVER 1<br>.COLLAR DE PALANCA 1 | 1 | | | | | |
| 14 | 93210–108H5 | .O-RING<br>.ANILLO O | 1 | | | | | |
| 15 | 95602–06100 | .NUT, U<br>.TUERCA U | 1 | | | | | |
| 16 | 5BP–H2917–00 | .SWITCH<br>.INTERRUPTOR | 1 | | | | | |
| 17 | 90151–03005 | .SCREW, COUNTERSUNK<br>.TORNILLO EMBUTIDO | 1 | | | | | |
| 18 | 90123–08083 | .BOLT<br>.PERNO | 1 | | | | | |
| 19 | 90179–08316 | .NUT<br>.TUERCA | 1 | | | | | |
| 20 | 97507–06525 | .BOLT, WITH WASHER<br>.PERNO CON ARANDELA | 1 | | | | | |
| 21 | 90338–09012 | PLUG<br>TAPON | 1 | | | | | |

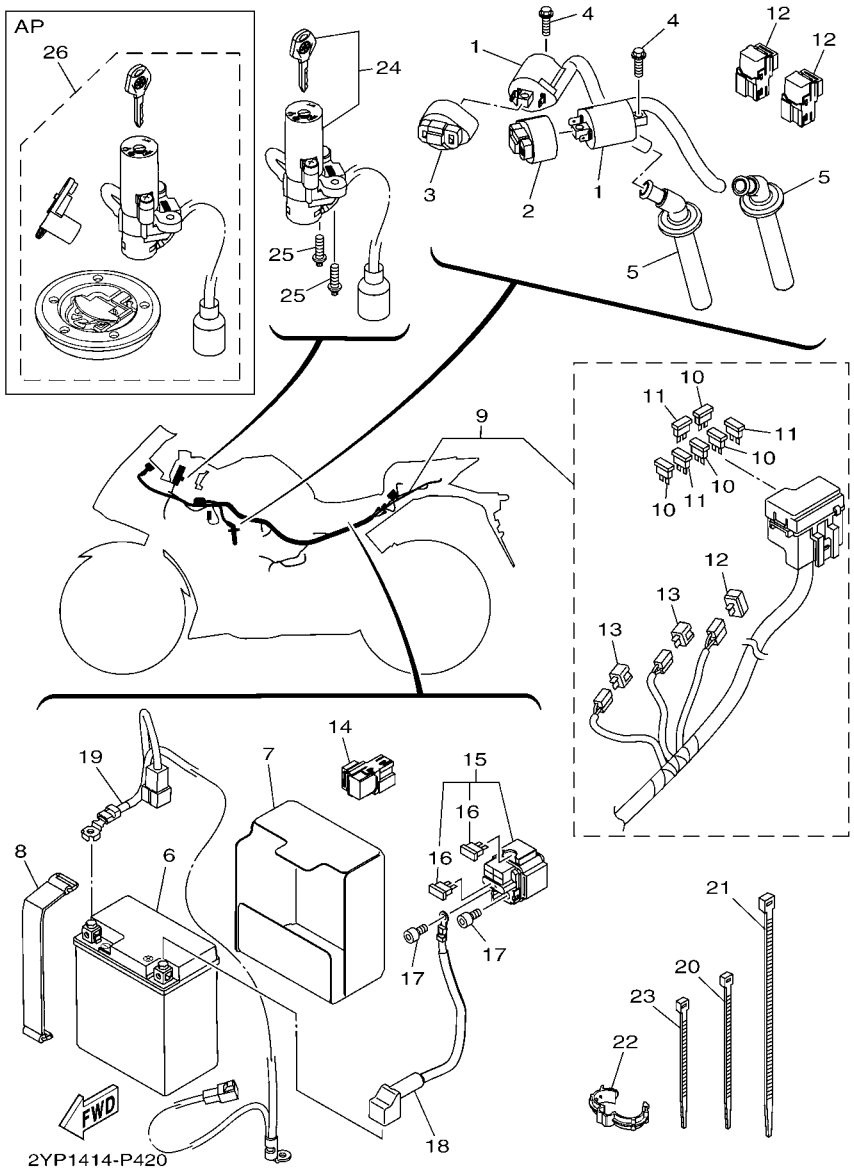


## FIG. 42 ELECTRICAL 1 — EQUIPO ELECTRICO 1

| REF. NO. | PART NO. CODIGO Nº | DESCRIPTION DESCRIPCION | 2YP2 | | | | | REMARKS OBSERVACIONES |
|---|---|---|---|---|---|---|---|---|
| 1 | 1WD–H2310–00 | IGNITION COIL ASSY<br>BOBINA DE ENCENDIDO COMPLETA | 2 | | | | | |
| 2 | 1WD–H2314–00 | COVER, IGNITION COIL<br>CUBIERTA BOBINA ENCENDIDO | 1 | | | | | |
| 3 | 1WD–H2314–10 | COVER, IGNITION COIL<br>CUBIERTA BOBINA ENCENDIDO | 1 | | | | | |
| 4 | 95022–06020 | BOLT, FLANGE<br>PERNO, DE BRIDA | 2 | | | | | |
| 5 | 1WD–H2370–00 | PLUG CAP ASSY<br>TAPON DE BUJIA COMPLT | 2 | | | | | |
| 6 | 1WD–H2100–00 | BATTERY ASSY (GS GTZ8V)<br>BATERIA COMPLETA (GS GTZ8V) | 1 | | | | | |
| 7 | 1WD–H2121–00 | PAD, BATTERY<br>BASE DE BATERIA | 1 | | | | | |
| 8 | 1WD–H2131–00 | BAND, BATTERY<br>TIRANTE DE BATERIA | 1 | | | | | |
| 9 | 1WD–H2590–00 | WIRE HARNESS ASSY<br>CONJUNTO DE CABLES | 1 | | | | | |
| 10 | 1WD–H2151–20 | .FUSE (7.5A BL)<br>.FUSIBLE (7.5A BL) | 4 | | | | | |
| 11 | 1WD–H2151–10 | .FUSE (15A-BL)<br>.FUSIBLE (15A-BL) | 3 | | | | | |
| 12 | 4WA–81980–00 | .DIODE ASSY<br>.CONJUNTO DIODO | 1 | | | | | |
| 13 | 3WP–81980–00 | .DIODE ASSY<br>.CONJUNTO DIODO | 2 | | | | | |
| 14 | 1WD–H1950–00 | RELAY ASSY<br>RELE COMPLETO | 3 | | | | | |
| 15 | 1WD–H1940–00 | STARTER RELAY ASSY<br>CONJUNTO ARRANCADOR RELEVO | 1 | | | | | |
| 16 | 1WD–H2151–00 | .FUSE (30A-BL)<br>.FUSIBLE (30A-BL) | 2 | | | | | |
| 17 | 91312–05008 | BOLT<br>TORNILLO | 2 | | | | | |
| 18 | 1WD–H2115–00 | WIRE, PLUS LEAD<br>CABLE CONDUCTOR POSITIVO | 1 | | | | | |
| 19 | 1WD–H2116–00 | WIRE, MINUS LEAD<br>CABLE CONDUCTOR NEGATIVO | 1 | | | | | |
| 20 | 90464–36800 | CLAMP<br>BRIDA | 2 | | | | | |
| 21 | 90464–70800 | CLAMP<br>BRIDA | 8 | | | | | |
| 22 | 90464–14803 | CLAMP<br>BRIDA | 1 | | | | | |
| 23 | 90464–22800 | CLAMP<br>BRIDA | 1 | | | | | |
| 24 | 1WD–XH250–01 | MAIN SW. STRG. LOCK SUB ASSY<br>LLAVE DE IGNICION COMPLT | 1 | | | | | |
| 25 | 90109–060G4 | BOLT<br>PERNO | 2 | | | | | |
| 26 | 1WD–XH250–00 | MAIN SW. STRG. LOCK SUB ASSY<br>LLAVE DE IGNICION COMPLT | 1 | | | | | AP<br>AP |
| 27 | 1WD–F179E–00 | BAND<br>BANDA | 1 | | | | | |

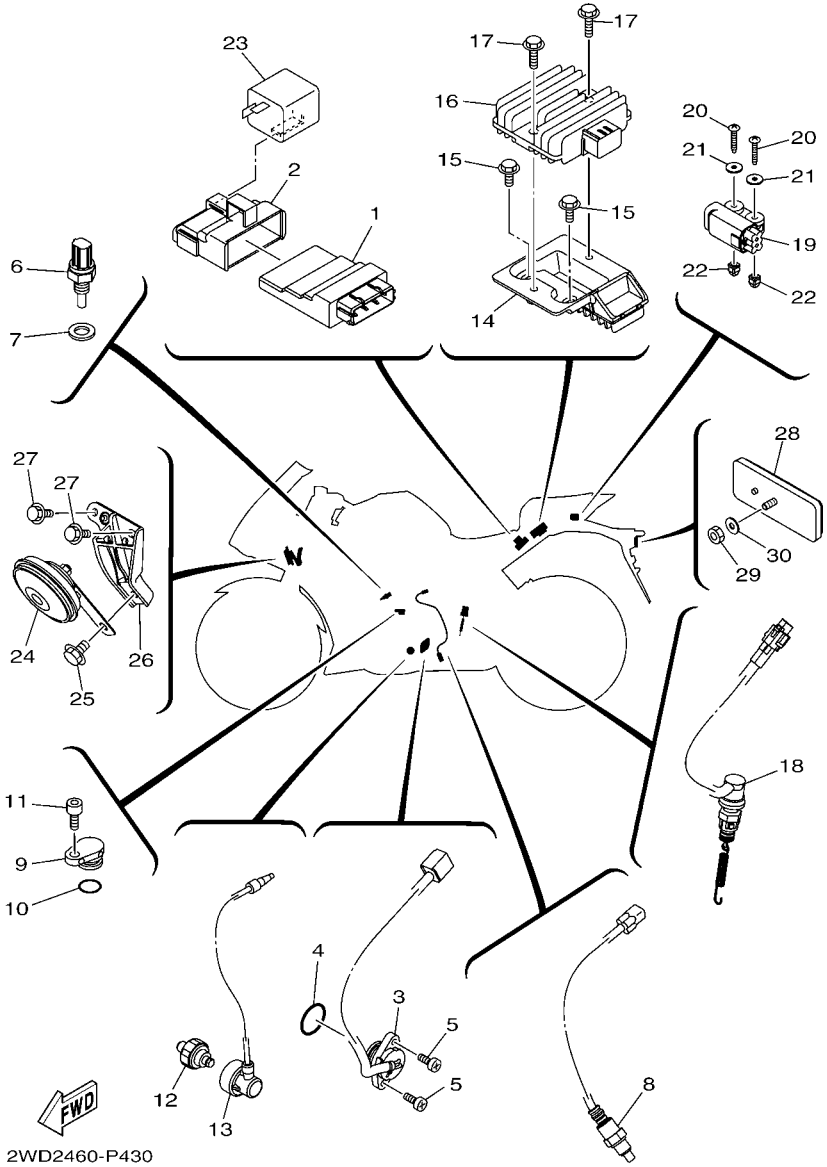


## FIG. 43 ELECTRICAL 2 — EQUIPO ELECTRICO 2

| REF. NO. | PART NO. CODIGO Nº | DESCRIPTION DESCRIPCION | 2YP2 | | | | | REMARKS OBSERVACIONES |
|---|---|---|---|---|---|---|---|---|
| 1 | 2MS–H591A–01 | ENGINE CONTROL UNIT ASSY<br>UNIDAD CONTROL | 1 | | | | | |
| 2 | 1WD–H5546–00 | BAND<br>BANDA | 1 | | | | | |
| 3 | 1WD–H2540–00 | NEUTRAL SWITCH ASSY<br>INTERRUPTOR NEUTRAL COMPL | 1 | | | | | |
| 4 | 93210–21801 | O-RING<br>ANILLO O | 1 | | | | | |
| 5 | 98502–05016 | SCREW, PAN HEAD<br>TORNILLO | 2 | | | | | |
| 6 | 54P–H3591–00 | THERMO UNIT<br>UNIDAD TERMOSTATO | 1 | | | | | |
| 7 | 90430–10804 | GASKET<br>JUNTA | 1 | | | | | |
| 8 | 1WD–H592A–00 | SENSOR, OXYGEN<br>SENSOR | 1 | | | | | |
| 9 | 1WD–H3755–00 | SENSOR, SPEED<br>SENSOR DE VELOCIDAD | 1 | | | | | |
| 10 | 2MS–E5317–00 | SPACER, ENGINE MOUNT<br>SEPARADPR, MONTANTE DE MOTOR | 1 | | | | | |
| 11 | 91312–06016 | BOLT<br>TORNILLO | 1 | | | | | |
| 12 | 1WS–82504–00 | OIL PRESSURE SWITCH ASSY<br>INTERRUPTOR PRESION DE ACEITE | 1 | | | | | |
| 13 | 1WD–H1315–00 | LEAD WIRE ASSY<br>CABLE CONDUCTOR COMPLETO | 1 | | | | | |
| 14 | 1WD–H1961–00 | COVER<br>CUBIERTA | 1 | | | | | |
| 15 | 95802–06016 | BOLT, FLANGE<br>TORNILLO DE REBORDE | 2 | | | | | |
| 16 | 1WD–H1960–00 | RECTIFIER & REGULATOR ASSY<br>RECTIFICADOR Y REGULADOR | 1 | | | | | |
| 17 | 95802–06025 | BOLT, FLANGE<br>TORNILLO DE REBORDE | 2 | | | | | |
| 18 | 1WD–H2530–00 | STOP SWITCH ASSY<br>INTERRUPTOR DE PARADA COMPLETO | 1 | | | | | |
| 19 | 1WD–H2576–00 | SENSOR, LEAN ANGLE<br>SENSOR ANGULO DE INCLINATION | 1 | | | | | |
| 20 | 90160–04009 | SCREW, ROUND TAPPING<br>TORNILLO REDONDO ROSCA HEMBRA | 2 | | | | | |
| 21 | 90201–04028 | WASHER, PLATE<br>ARANDELA PLANA | 2 | | | | | |
| 22 | 4B4–84334–00 | NUT, ADJUSTING<br>TUERCA DE AJUSTE | 2 | | | | | |
| 23 | 1WD–H3351–00 | RELAY, FLASHER<br>RELE | 1 | | | | | |
| 24 | 1WD–H3371–00 | HORN<br>BOCINA | 1 | | | | | |
| 25 | 95802–08012 | BOLT, FLANGE<br>TORNILLO DE REBORDE | 1 | | | | | |
| 26 | 1WD–H3378–00 | STAY, HORN<br>SOPORTE DE BOCINA | 1 | | | | | |
| 27 | 95807–06016 | BOLT, FLANGE<br>TORNILLO | 2 | | | | | |

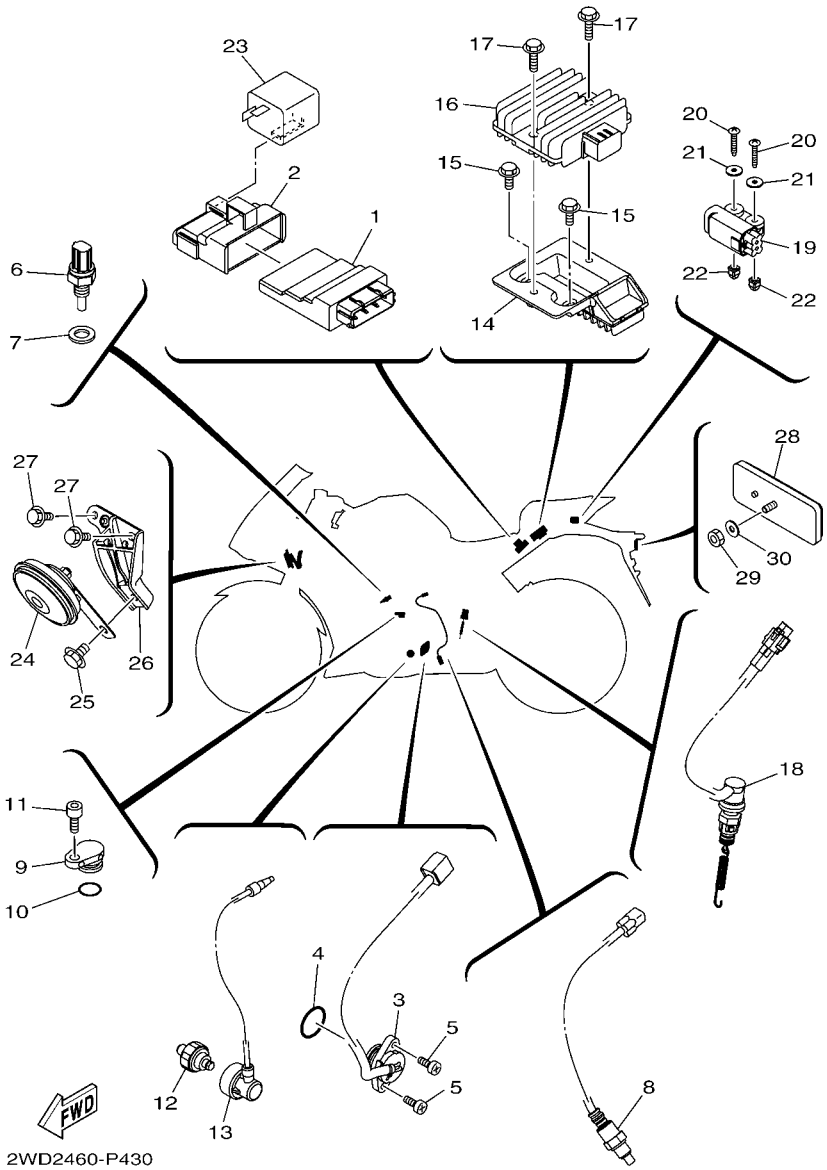


## FIG. 43 ELECTRICAL 2 EQUIPO ELECTRICO 2

| REF. NO. | PART NO. CODIGO Nº | DESCRIPTION DESCRIPCION | 2YP2 | | | | | REMARKS OBSERVACIONES |
|---|---|---|---|---|---|---|---|---|
| 28 | 3C1–H5130–00 | REAR REFLECTOR ASSY<br>REFLECTOR TRASERO COMPLETO | 1 | | | | | |
| 29 | 95602–05100 | NUT, U<br>TUERCA U | 1 | | | | | |
| 30 | 90201–05043 | WASHER, PLATE<br>ARANDELA PLANA | 1 | | | | | |

NUMERICAL INDEX
INDICE NUMERICO


| PART NO. CODIGO Nº | REF. NO. |
|---|---|
| 2MS–11361–00 | 1 – 9 |
| 1WD–11411–00 | 2 – 1 |
| 1WD–11413–00 | 2 – 23 |
| 1WD–11413–10 | 2 – 23 |
| 1WD–11413–20 | 2 – 23 |
| 1WD–11413–30 | 2 – 23 |
| 1WD–11413–40 | 2 – 23 |
| 1WD–11416–00 | 2 – 10 |
| 1WD–11416–10 | 2 – 10 |
| 1WD–11416–20 | 2 – 10 |
| 1WD–11416–30 | 2 – 10 |
| 1WD–11416–40 | 2 – 10 |
| 1WD–11650–00 | 2 – 2 |
| 5SL–11654–00 | 2 – 3 |
| 1WD–11656–00 | 2 – 5 |
| 1WD–11656–10 | 2 – 5 |
| 1WD–11656–20 | 2 – 5 |
| 1WD–11656–30 | 2 – 5 |
| 2MS–12153–10 | 3 – 9 |
| 1HX–12168–F0 | 3 – 8 |
| 1HX–12168–H1 | 3 – 8 |
| 1HX–12168–K1 | 3 – 8 |
| 1HX–12168–M1 | 3 – 8 |
| 1HX–12168–R1 | 3 – 8 |
| 1HX–12168–U1 | 3 – 8 |
| 1HX–12168–W1 | 3 – 8 |
| 1HX–12168–Y1 | 3 – 8 |
| 1HX–12169–11 | 3 – 8 |
| 1HX–12169–31 | 3 – 8 |
| 1HX–12169–50 | 3 – 8 |
| 1HX–12169–70 | 3 – 8 |
| 1HX–12169–90 | 3 – 8 |
| 1HX–12169–E0 | 3 – 8 |
| 1HX–12169–G0 | 3 – 8 |
| 1HX–12169–J0 | 3 – 8 |
| 1HX–12169–L0 | 3 – 8 |
| 1HX–12169–N0 | 3 – 8 |
| 1HX–12169–T0 | 3 – 8 |
| 2MS–12210–00 | 4 – 6 |
| 5P0–12411–00 | 6 – 1 |
| 5NL–12564–00 | 1 – 28 |
| 8GL–13571–00 | 8 – 13 |
| 5JW–14104–00 | 8 – 15 |
| 8A7–14139–00 | 8 – 17 |
| 5PS–14147–00 | 8 – 8 |
| 895–14169–00 | 8 – 16 |
| 1WS–14335–00 | 8 – 10 |
| 8HG–14534–00 | 8 – 14 |

| PART NO. CODIGO Nº | REF. NO. |
|---|---|
| 4XY–14568–00 | 23 – 58 |
| 5VY–1482K–00 | 1 – 20 |
| 2H7–15361–00 | 5 – 18 |
| 1WD–16382–00 | 13 – 19 |
| 1WD–17424–00 | 14 – 28 |
| 278–17425–00 | 14 – 12 |
| | 14 – 29 |
| 26P–21568–10 | 23 – 60 |
| 1WD–22141–00 | 20 – 2 |
| 1WS–2331G–00 | 22 – 40 |
| 3FV–23462–00 | 22 – 38 |
| 1WD–25181–00 | 25 – 9 |
| 1WD–25381–00 | 27 – 19 |
| 5MT–25398–00 | 25 – 7 |
| | 27 – 18 |
| 5MT–25398–10 | 25 – 7 |
| | 27 – 18 |
| 5MT–25398–20 | 25 – 7 |
| | 27 – 18 |
| 1WD–25802–00 | 26 – 4 |
| 1WD–25802–50 | 28 – 4 |
| 1WD–25803–00 | 26 – 5 |
| 1WD–25803–50 | 28 – 5 |
| 1WD–25805–00 | 26 – 12 |
| 1WD–25806–00 | 28 – 15 |
| 5RB–25854–00 | 30 – 3 |
| 36Y–2589H–00 | 30 – 5 |
| 5KN–25926–01 | 28 – 17 |
| 34X–25937–00 | 28 – 7 |
| 4SS–27218–00 | 32 – 3 |
| 3KW–27234–00 | 32 – 8 |
| 4BP–27261–00 | 31 – 25 |
| 3WP–81980–00 | 42 – 13 |
| 4WA–81980–00 | 42 – 12 |
| 1WS–82504–00 | 43 – 12 |
| 1KB–83311–00 | 37 – 2 |
| | 37 – 6 |
| | 37 – 11 |
| | 37 – 15 |
| 3D7–83318–10 | 37 – 9 |
| 1KB–8333A–00 | 37 – 4 |
| | 37 – 17 |
| 1KB–8334A–00 | 37 – 8 |
| | 37 – 13 |
| 31A–83913–00 | 41 – 13 |
| 31A–83945–00 | 41 – 12 |
| 1HP–83980–01 | 30 – 11 |
| 4B4–84334–00 | 43 – 22 |

| PART NO. CODIGO Nº | REF. NO. |
|---|---|
| 4AG–85111–00 | 18 – 11 |
| 1WS–85801–00 | 8 – 9 |
| 2MS–E1102–00 | 1 – 1 |
| 1WD–E111G–00 | 1 – 16 |
| | 1 – 25 |
| 1WD–E1133–10 | 1 – 3 |
| 2MS–E1133–10 | 1 – 2 |
| 2MS–E1181–00 | 1 – 13 |
| 1WD–E1191–00 | 1 – 17 |
| 1WD–E1193–00 | 1 – 19 |
| 4YS–E1198–00 | 7 – 15 |
| 2MS–E1311–00 | 1 – 26 |
| 1WD–E1351–00 | 1 – 27 |
| 1WD–E1454–00 | 2 – 22 |
| 1WD–E1496–00 | 2 – 18 |
| 1WD–E1531–00 | 2 – 15 |
| 1WD–E1536–00 | 2 – 6 |
| 1WD–E1549–00 | 2 – 7 |
| 2MS–E1603–00 | 2 – 12 |
| 2MS–E1631–00 | 2 – 11 |
| 1WD–E1633–00 | 2 – 13 |
| 2MS–E2111–00 | 3 – 1 |
| 2MS–E2113–00 | 3 – 4 |
| 2MS–E2117–00 | 3 – 5 |
| 3S0–E2118–00 | 3 – 6 |
| 1PA–E2119–00 | 3 – 7 |
| 2MS–E2121–00 | 3 – 2 |
| 2MS–E2126–00 | 3 – 3 |
| 2MS–E2170–00 | 4 – 1 |
| 1WD–E2176–00 | 4 – 3 |
| 2MS–E2180–00 | 4 – 2 |
| 1WD–E2213–00 | 4 – 9 |
| 33S–E2223–00 | 5 – 8 |
| 1WD–E2241–00 | 1 – 18 |
| 1WD–E2251–00 | 4 – 11 |
| 2MS–E2252–00 | 4 – 12 |
| 1WD–E2256–00 | 4 – 14 |
| 2MS–E2405–00 | 6 – 9 |
| 1WD–E2413–00 | 6 – 2 |
| 1WD–E2420–00 | 5 – 1 |
| 1WD–E2422–00 | 5 – 14 |
| 1WD–E2428–00 | 5 – 15 |
| 1WD–E2450–00 | 5 – 6 |
| 1WD–E2453–00 | 5 – 7 |
| 33S–E2456–00 | 5 – 9 |
| 1WD–E2461–00 | 6 – 8 |
| 5ST–E2462–00 | 6 – 12 |
| 2MS–E2577–00 | 6 – 4 |

| PART NO. CODIGO Nº | REF. NO. |
|---|---|
| 1WD–E2578–00 | 6 – 5 |
| 1WD–E2671–00 | 6 – 10 |
| 5YP–E2675–00 | 6 – 11 |
| 1WD–E2681–00 | 5 – 12 |
| 1WD–E319L–00 | 5 – 10 |
| 1WD–E3300–00 | 7 – 1 |
| 1WD–E3341–00 | 7 – 3 |
| 1WD–E3342–00 | 7 – 4 |
| 1WD–E3410–00 | 7 – 9 |
| 1WD–E3414–00 | 7 – 16 |
| 1WD–E3415–00 | 7 – 10 |
| 1WD–E3417–00 | 7 – 13 |
| 1WD–E3440–00 | 7 – 11 |
| 54P–E3474–00 | 8 – 35 |
| 1WD–E3543–00 | 8 – 37 |
| 1WD–E3556–00 | 8 – 6 |
| 1WD–E3573–00 | 8 – 12 |
| 2MS–E3586–00 | 8 – 1 |
| 2MS–E3750–10 | 8 – 5 |
| 1WD–E3761–00 | 8 – 7 |
| 1WD–E3907–00 | 23 – 44 |
| 1WD–E3938–00 | 8 – 20 |
| 1WD–E3971–00 | 23 – 49 |
| 54P–E416A–00 | 8 – 18 |
| 1WD–E4243–00 | 8 – 19 |
| 1WD–E4411–00 | 8 – 21 |
| 2MS–E4412–00 | 8 – 25 |
| 1WD–E4422–00 | 8 – 29 |
| 1WD–E4437–00 | 8 – 24 |
| 52B–E443E–00 | 8 – 33 |
| 40D–E443G–00 | 27 – 28 |
| 1WD–E4451–00 | 8 – 32 |
| 1WD–E4452–00 | 8 – 26 |
| 1WD–E4457–00 | 8 – 27 |
| 1WD–E4462–00 | 8 – 30 |
| 2MS–E4469–00 | 8 – 22 |
| 2MS–E446C–00 | 8 – 23 |
| 2MS–E4602–00 | 9 – 1 |
| 1WD–E4613–00 | 9 – 21 |
| 1WD–E4628–00 | 9 – 27 |
| 2MS–E4710–00 | 9 – 6 |
| 54D–E4714–00 | 9 – 15 |
| 1WD–E4715–00 | 9 – 16 |
| 1WD–E4728–00 | 9 – 10 |
| 1WD–E473L–00 | 9 – 2 |
| 5TP–E4747–00 | 9 – 4 |
| | 17 – 30 |
| | 31 – 48 |

| PART NO. CODIGO Nº | REF. NO. |
|---|---|
| 1WD–E4758–00 | 9 – 7 |
| 1WD–E4763–00 | 9 – 14 |
| 1WD–E4775–00 | 9 – 5 |
| 1WD–E4840–00 | 1 – 31 |
| 1WD–E4881–00 | 1 – 32 |
| 1WD–E4882–00 | 1 – 34 |
| 1WD–E4890–00 | 1 – 21 |
| 1WD–E4899–00 | 1 – 22 |
| 1WD–E5148–00 | 10 – 4 |
| 1WD–E5150–10 | 10 – 1 |
| 1WD–E5155–00 | 10 – 12 |
| 2MS–E5317–00 | 43 – 10 |
| 1WD–E5362–00 | 5 – 19 |
| 1WD–E5373–00 | 8 – 40 |
| 1WD–E5377–00 | 11 – 21 |
| 1WD–E5411–00 | 11 – 1 |
| 1WD–E5413–10 | 11 – 16 |
| 1WD–E5418–00 | 11 – 22 |
| 1WD–E5421–00 | 5 – 2 |
| 2MS–E5441–00 | 11 – 14 |
| 1WD–E5451–00 | 11 – 7 |
| 1WD–E5461–00 | 11 – 10 |
| 1WD–E5462–00 | 11 – 17 |
| 1WD–E5514–00 | 12 – 1 |
| 1WD–E5515–00 | 12 – 3 |
| 44D–E5521–00 | 12 – 2 |
| 1WD–E5580–00 | 12 – 4 |
| 1WD–E6111–00 | 13 – 1 |
| 2MS–E6150–00 | 13 – 2 |
| 1WD–E6154–00 | 13 – 3 |
| 1WD–E6181–00 | 13 – 13 |
| 1WD–E6324–00 | 13 – 6 |
| 1WD–E6331–00 | 13 – 5 |
| 2MS–E6333–10 | 13 – 8 |
| 1WD–E6337–00 | 13 – 9 |
| 2MS–E6340–00 | 13 – 15 |
| 2MS–E6350–00 | 13 – 7 |
| 1WD–E6356–00 | 13 – 14 |
| 2MS–E6371–00 | 13 – 4 |
| 2MS–E7121–00 | 14 – 7 |
| 2MS–E7131–00 | 14 – 5 |
| 2MS–E7151–00 | 14 – 2 |
| 2MS–E7161–00 | 14 – 6 |
| 2MS–E7211–00 | 14 – 23 |
| 2MS–E7221–00 | 14 – 14 |
| 2MS–E7231–00 | 14 – 18 |
| 2MS–E7241–00 | 14 – 19 |
| 2MS–E7251–00 | 14 – 22 |

| PART NO. CODIGO Nº | REF. NO. |
|---|---|
| 2MS–E7261–00 | 14 – 17 |
| 1WD–E7402–00 | 14 – 13 |
| 2MS–E7411–00 | 14 – 1 |
| 1WD–E7460–00 | 14 – 31 |
| 1WD–E8101–00 | 16 – 4 |
| 1WD–E8110–00 | 16 – 11 |
| 1WD–E8112–00 | 16 – 16 |
| 1EG–E8113–01 | 16 – 12 |
| 1WD–E8115–00 | 16 – 13 |
| 1WD–E8127–00 | 16 – 2 |
| 1WD–E8140–00 | 16 – 8 |
| 1WD–E8175–00 | 16 – 3 |
| 1WD–E8337–00 | 16 – 1 |
| 1WD–E8511–00 | 15 – 4 |
| 1WD–E8512–00 | 15 – 5 |
| 1WD–E8513–00 | 15 – 6 |
| 1WD–E8531–00 | 15 – 7 |
| 1WD–E8536–00 | 15 – 9 |
| 1WD–E8540–10 | 15 – 1 |
| 5TP–E8542–00 | 15 – 2 |
| 1WD–E8562–00 | 15 – 10 |
| 1WD–F1110–10 | 17 – 1 |
| 1WD–F112C–00 | 17 – 3 |
| 1WD–F113B–00 | 17 – 2 |
| 1WD–F113J–00 | 18 – 10 |
| 1WD–F1171–00 | 17 – 17 |
| 1WD–F117G–00 | 17 – 4 |
| 1WD–F117K–00 | 24 – 12 |
| 1WD–F122A–00 | 17 – 24 |
| 1WD–F122B–00 | 17 – 25 |
| 1WD–F1278–00 | 33 – 19 |
| 1WD–F135F–00 | 17 – 15 |
| 1WD–F144G–00 | 31 – 28 |
| 1WD–F153E–00 | 18 – 2 |
| 1WD–F153E–10 | 18 – 2 |
| 1WD–F153E–20 | 18 – 2 |
| 1WD–F1586–00 | 18 – 3 |
| 1WD–F1611–01 | 18 – 13 |
| 1WD–F1617–00 | 18 – 21 |
| 1WD–F1621–00 | 18 – 31 |
| 1WD–F1629–01 | 18 – 20 |
| 1WD–F163A–00 | 18 – 33 |
| 1WD–F163E–00 | 18 – 18 |
| 1WD–F1652–00 | 17 – 5 |
| 2MS–F1668–00 | 20 – 17 |
| 1WD–F1669–00 | 18 – 14 |
| 1WD–F1688–00 | 18 – 26 |
| 1WD–F1689–00 | 18 – 27 |

NUMERICAL INDEX
INDICE NUMERICO


| PART NO. CODIGO Nº | REF. NO. |
|---|---|
| 1WD–F16A2–00 | 18 – 17 |
| 1WD–F171E–00 | 19 – 40 |
| 1WD–F171L–00 | 19 – 21 |
| 1WD–F171M–00 | 19 – 24 |
| 1WD–F171N–00 | 19 – 27 |
| 1WD–F171X–00 | 19 – 42 |
| 1WD–F172W–00 | 19 – 36 |
| 1WD–F1731–00–P0 | 19 – 38 |
| 1WD–F1731–00–P1 | 19 – 38 |
| 1WD–F1731–00–P2 | 19 – 38 |
| 1WD–F1732–00 | 40 – 7 |
| 1WD–F179E–00 | 42 – 27 |
| 1WD–F17F1–00 | 19 – 6 |
| 2MS–F17F1–00 | 19 – 6 |
| 2MS–F17F1–10 | 19 – 6 |
| 1WD–F17F2–00 | 19 – 16 |
| 2MS–F17F2–00 | 19 – 16 |
| 2MS–F17F2–10 | 19 – 16 |
| 1WD–F17F3–00 | 19 – 7 |
| 1WD–F17F4–00 | 19 – 17 |
| 1WD–F1816–00 | 19 – 33 |
| 1WD–F1817–00 | 19 – 34 |
| 3C1–F1828–00 | 19 – 32 |
| 1WD–F1871–00 | 19 – 29 |
| 1WD–F1875–00 | 19 – 31 |
| 1WD–F191B–00 | 17 – 9 |
| 1WD–F193A–00 | 17 – 6 |
| 1WD–F2110–00 | 20 – 1 |
| 1WD–F2123–00 | 17 – 8 |
| 1WD–F2129–00 | 20 – 3 |
| 1WD–F2151–00 | 20 – 7 |
| 1WD–F2174–00 | 27 – 25 |
| 1WD–F2184–00 | 20 – 4 |
| 1WD–F2210–00 | 20 – 14 |
| 1WD–F2311–00 | 20 – 11 |
| 1WD–F248B–00 | 20 – 9 |
| 1WD–F3100–00 | 22 – 1 |
| 1WD–F3102–00 | 22 – 2 |
| 1WD–F3103–00 | 22 – 19 |
| 1WD–F3110–00 | 22 – 4 |
| | 22 – 21 |
| 45P–F3111–00 | 22 – 17 |
| | 22 – 34 |
| 1WD–F3118–00 | 22 – 16 |
| | 22 – 33 |
| 45P–F3125–00 | 22 – 7 |
| | 22 – 24 |
| 1WD–F3126–00 | 22 – 3 |

| PART NO. CODIGO Nº | REF. NO. |
|---|---|
| 1WD–F3136–00 | 22 – 20 |
| 1WD–F3141–00 | 22 – 6 |
| | 22 – 23 |
| 45P–F3144–00 | 22 – 11 |
| | 22 – 28 |
| 45P–F3145–00 | 22 – 9 |
| | 22 – 26 |
| 45P–F3146–00 | 22 – 8 |
| | 22 – 25 |
| 45P–F3149–00 | 22 – 15 |
| | 22 – 32 |
| 45P–F3156–00 | 22 – 10 |
| | 22 – 27 |
| 509–F3158–L0 | 22 – 13 |
| | 22 – 30 |
| 1WD–F3170–00 | 22 – 5 |
| | 22 – 22 |
| 1WD–F3173–00 | 22 – 12 |
| | 22 – 29 |
| 31B–F3181–00 | 22 – 14 |
| | 22 – 31 |
| 45P–F3188–00 | 22 – 18 |
| | 22 – 35 |
| 1WD–F3340–00 | 22 – 36 |
| 45P–F3346–00 | 22 – 39 |
| 5BP–F3416–00 | 21 – 2 |
| 5BP–F3418–00 | 21 – 5 |
| 1WD–F3435–00 | 21 – 6 |
| 1WD–F4110–00 | 23 – 1 |
| 1WD–F4129–00–P0 | 23 – 29 |
| 1WD–F4129–00–P1 | 23 – 29 |
| 1WD–F4129–00–P2 | 23 – 29 |
| 1WD–F412Y–00 | 23 – 6 |
| 1WD–F4139–00–P0 | 23 – 36 |
| 1WD–F4139–00–P1 | 23 – 36 |
| 1WD–F4139–00–P2 | 23 – 36 |
| 1WD–F413B–00 | 23 – 59 |
| 1WD–F414E–00 | 23 – 43 |
| 1WD–F414G–00 | 23 – 28 |
| 5D9–F414G–00 | 17 – 7 |
| | 23 – 4 |
| 45P–F414H–00 | 23 – 5 |
| 1WD–F4188–00 | 23 – 2 |
| 1WD–F4191–00 | 23 – 12 |
| 1WD–F41B1–00–P0 | 23 – 22 |
| 1WD–F41B1–00–P1 | 23 – 22 |
| 1WD–F4312–00 | 23 – 50 |
| 1WD–F4313–00 | 23 – 55 |

| PART NO. CODIGO Nº | REF. NO. |
|---|---|
| 1WD–F4314–00 | 23 – 51 |
| 1WD–F4315–00 | 23 – 56 |
| 1WD–F4339–00 | 23 – 7 |
| 1WD–F4376–00 | 23 – 53 |
| 3C1–F4486–00 | 23 – 47 |
| 1WD–F4491–00 | 23 – 46 |
| 1WD–F4710–00 | 24 – 1 |
| 1WD–F4711–00 | 24 – 2 |
| 3C1–F4741–00 | 24 – 6 |
| 5BP–F4741–00 | 24 – 3 |
| 1WD–F4750–00 | 24 – 5 |
| 1WD–F4780–00 | 24 – 7 |
| 1WD–F478E–00 | 24 – 10 |
| 1WD–F4792–00 | 24 – 8 |
| 1WD–F510C–00 | 25 – 2 |
| 1WD–F5168–00–0X | 25 – 1 |
| 1WD–F5168–00–P0 | 25 – 1 |
| 1WD–F5338–00–0X | 27 – 1 |
| 1WD–F5338–00–P0 | 27 – 1 |
| 1WD–F5364–00 | 27 – 5 |
| 1WD–F5366–00–98 | 27 – 6 |
| 1WD–F5366–00–P0 | 27 – 6 |
| 1WD–F5377–00 | 27 – 9 |
| 1WD–F537W–00 | 27 – 11 |
| 1WD–F537X–00 | 27 – 12 |
| 1WD–F5383–00 | 27 – 21 |
| 1PA–F5386–00 | 25 – 8 |
| 1WD–F5386–00 | 27 – 20 |
| 1WD–F5388–00 | 27 – 24 |
| 1WD–F539F–00 | 27 – 13 |
| 1WD–F5443–00 | 27 – 10 |
| 1WD–F5807–00 | 30 – 2 |
| 1WD–F5808–00 | 32 – 2 |
| 1WD–F580E–00 | 32 – 1 |
| 1WD–F580U–01 | 26 – 3 |
| 1WD–F580W–01 | 28 – 3 |
| 1WD–F581U–00 | 26 – 1 |
| 50C–F582A–50 | 32 – 5 |
| 1WD–F582E–00 | 32 – 21 |
| 1WD–F582W–00 | 28 – 1 |
| 5TL–F5838–00 | 28 – 18 |
| 1WD–F5852–00 | 30 – 4 |
| 1WD–F5852–50 | 32 – 12 |
| 2VN–F5854–00 | 32 – 10 |
| 3C1–F5855–00 | 30 – 7 |
| 50C–F5855–00 | 32 – 11 |
| 50C–F5866–00 | 32 – 6 |
| 3RW–F5867–00 | 30 – 6 |

| PART NO. CODIGO Nº | REF. NO. |
|---|---|
| 1WD–F5870–00 | 30 – 1 |
| 1WD–F5872–00 | 30 – 15 |
| 1WD–F5873–00 | 32 – 22 |
| 1WD–F5875–00 | 30 – 18 |
| 1WD–F5876–00 | 30 – 20 |
| 1WD–F5887–00 | 32 – 25 |
| 50C–F5894–10 | 32 – 9 |
| 1WD–F5895–50 | 32 – 13 |
| 50C–F589A–00 | 32 – 15 |
| 1WD–F5914–50 | 28 – 16 |
| 5YP–F5917–00 | 26 – 8 |
| | 28 – 6 |
| 1WD–F5919–00 | 26 – 10 |
| 1WD–F5919–50 | 28 – 9 |
| 1WD–F5921–50 | 28 – 12 |
| 5YP–F5924–00 | 26 – 11 |
| 1WD–F5924–50 | 28 – 10 |
| 5YP–F5925–01 | 26 – 9 |
| | 28 – 11 |
| 5YP–F5937–00 | 26 – 7 |
| 1WD–F5939–50 | 28 – 13 |
| 1WD–F5939–60 | 28 – 14 |
| 1WD–F6121–01 | 29 – 1 |
| 1WD–F6122–00 | 29 – 5 |
| 1WD–F6131–00 | 29 – 17 |
| 1WD–F6132–00 | 29 – 22 |
| 1S7–F622F–00 | 29 – 12 |
| 2MS–F622H–00 | 29 – 11 |
| 1WD–F6240–00 | 29 – 10 |
| 2DP–F6241–00 | 29 – 9 |
| 1WD–F6246–00 | 29 – 14 |
| 1S7–F6257–00 | 29 – 13 |
| 1WD–F6280–10 | 33 – 23 |
| 1WD–F6290–10 | 33 – 24 |
| 1WD–F6301–00 | 29 – 19 |
| 1WD–F6335–00 | 29 – 16 |
| 1WD–F7211–00 | 31 – 24 |
| 50C–F7222–00 | 32 – 4 |
| 45P–F7261–00 | 16 – 17 |
| 1WD–F7311–00 | 31 – 1 |
| 1WD–F7321–10 | 31 – 2 |
| 1WD–F7430–00 | 31 – 32 |
| 1WD–F7431–00 | 31 – 33 |
| 1WD–F7435–00 | 31 – 11 |
| | 31 – 20 |
| 1WD–F7437–00 | 31 – 36 |
| | 31 – 44 |
| 1WD–F7440–00 | 31 – 40 |

| PART NO. CODIGO Nº | REF. NO. |
|---|---|
| 1WD–F7441–00 | 31 – 41 |
| 1WD–F7442–00 | 31 – 9 |
| 1WD–F7443–00 | 31 – 18 |
| 2MS–F7445–00 | 31 – 15 |
| 2MS–F7446–00 | 31 – 31 |
| 1WD–F7451–00 | 31 – 10 |
| 1WD–F7461–00 | 31 – 19 |
| 1WD–F8100–00 | 24 – 15 |
| 31B–F8307–00 | 19 – 8 |
| | 19 – 18 |
| 1WD–F8328–00 | 34 – 2 |
| | 34 – 8 |
| 1WD–F8328–10 | 34 – 2 |
| | 34 – 8 |
| 1WD–F8328–20 | 34 – 56 |
| 1WD–F833E–00 | 34 – 48 |
| 1WD–F8356–00 | 33 – 21 |
| 1WD–F835G–00 | 33 – 4 |
| 1WD–F835U–00–P0 | 34 – 31 |
| 1WD–F835V–00–P0 | 34 – 32 |
| 1PA–F836B–00 | 19 – 44 |
| | 33 – 31 |
| 1WD–F836K–00 | 34 – 50 |
| 1WD–F836L–00 | 34 – 51 |
| 1WD–F836M–00 | 34 – 54 |
| 1WD–F836N–00 | 33 – 15 |
| 1WD–F836R–00 | 33 – 16 |
| 1WD–F8376–00 | 33 – 5 |
| | 33 – 14 |
| | 33 – 20 |
| 44D–F8379–00 | 33 – 12 |
| 1WD–F8381–00 | 33 – 1 |
| 1WD–F8385–00–P0 | 34 – 36 |
| 2MS–F8391–00 | 33 – 10 |
| 2MS–F8391–10 | 33 – 10 |
| 1WD–F8392–00 | 33 – 11 |
| 2MS–F8393–00 | 34 – 3 |
| 2MS–F8393–10 | 34 – 3 |
| 1WD–F8393–20 | 34 – 3 |
| 2MS–F8394–00 | 34 – 9 |
| 2MS–F8394–10 | 34 – 9 |
| 1WD–F8394–20 | 34 – 9 |
| 1WD–F8395–00–P0 | 34 – 42 |
| 1WD–F8398–00 | 34 – 4 |
| 2MS–F8398–00 | 34 – 4 |
| 1WD–F8398–10 | 34 – 4 |
| 1WD–F8399–00 | 34 – 10 |
| 2MS–F8399–00 | 34 – 10 |

| PART NO. CODIGO Nº | REF. NO. |
|---|---|
| 1WD–F8399–10 | 34 – 10 |
| 2MS–F83GA–00 | 34 – 16 |
| 2MS–F83GB–00 | 34 – 22 |
| 1WD–F8483–00 | 33 – 25 |
| 1WD–F8484–00 | 33 – 26 |
| 1WD–F8485–00 | 33 – 27 |
| 1WD–H1315–00 | 43 – 13 |
| 1WD–H1410–00 | 35 – 2 |
| 1WD–H1450–00 | 35 – 1 |
| 1WD–H1800–00 | 36 – 1 |
| 1WD–H1801–00 | 36 – 2 |
| 1WD–H1828–00 | 36 – 4 |
| 4FP–H182L–00 | 36 – 6 |
| 1WD–H183G–00 | 36 – 5 |
| 1WD–H1861–00 | 36 – 3 |
| 1WD–H1940–00 | 42 – 15 |
| 1WD–H1950–00 | 42 – 14 |
| 1WD–H1960–00 | 43 – 16 |
| 1WD–H1961–00 | 43 – 14 |
| 1WD–H2100–00 | 42 – 6 |
| 1WD–H2115–00 | 42 – 18 |
| 1WD–H2116–00 | 42 – 19 |
| 1WD–H2121–00 | 42 – 7 |
| 1WD–H2131–00 | 42 – 8 |
| 5TL–H2131–00 | 24 – 16 |
| 1WD–H2133–00 | 41 – 2 |
| 45P–H2133–00 | 41 – 5 |
| 1WD–H2151–00 | 42 – 16 |
| 1WD–H2151–10 | 42 – 11 |
| 1WD–H2151–20 | 42 – 10 |
| 1WD–H2310–00 | 42 – 1 |
| 1WD–H2314–00 | 42 – 2 |
| 1WD–H2314–10 | 42 – 3 |
| 1WD–H2370–00 | 42 – 5 |
| 1WD–H2530–00 | 43 – 18 |
| 1WD–H2540–00 | 43 – 3 |
| 1WD–H2576–00 | 43 – 19 |
| 1WD–H2590–00 | 42 – 9 |
| 1WD–H2910–00 | 41 – 9 |
| 1WD–H2911–00 | 41 – 10 |
| 5BP–H2917–00 | 41 – 16 |
| 1WD–H3310–10 | 37 – 1 |
| 1WD–H3318–00 | 37 – 18 |
| 1WD–H3320–10 | 37 – 5 |
| 1WD–H3330–10 | 37 – 10 |
| 3D9–H3333–10 | 37 – 3 |
| | 37 – 7 |
| | 37 – 12 |

NUMERICAL INDEX
INDICE NUMERICO


| PART NO. CODIGO Nº | REF. NO. |
|---|---|
| 3D9–H3333–10 | 37 – 16 |
| 1WD–H3340–10 | 37 – 14 |
| 1WD–H3351–00 | 43 – 23 |
| 1WD–H3371–00 | 43 – 24 |
| 1WD–H3378–00 | 43 – 26 |
| 2MS–H3500–10 | 38 – 1 |
| 1WD–H3519–00 | 38 – 5 |
| 1WD–H3559–00 | 33 – 3 |
| 1WD–H3571–00 | 38 – 2 |
| 1WD–H3572–00 | 38 – 3 |
| 54P–H3591–00 | 43 – 6 |
| 1WD–H3755–00 | 43 – 9 |
| 1WD–H3912–00 | 41 – 11 |
| 1WD–H3922–00 | 30 – 8 |
| 1WD–H395W–00 | 41 – 3 |
| 45P–H395W–00 | 41 – 6 |
| 1WD–H3972–00 | 41 – 1 |
| 1WD–H3975–00 | 41 – 4 |
| 1WD–H4300–00 | 39 – 1 |
| 1WD–H4303–00 | 39 – 3 |
| 1WD–H4314–00 | 39 – 2 |
| 1WD–H4340–00 | 39 – 5 |
| 1WD–H4347–00 | 39 – 6 |
| 1WD–H4397–00 | 39 – 4 |
| 1WD–H4547–00 | 40 – 10 |
| 1WD–H4710–01 | 40 – 1 |
| 1WD–H4726–00 | 40 – 11 |
| 1WD–H4740–00 | 40 – 8 |
| 1WD–H4744–00 | 40 – 9 |
| 1WD–H4753–00 | 40 – 12 |
| 3C1–H5130–00 | 43 – 28 |
| 1WD–H5546–00 | 43 – 2 |
| 1WD–H5752–00 | 23 – 45 |
| 2MS–H591A–01 | 43 – 1 |
| 1WD–H592A–00 | 43 – 8 |
| 4C9–W0048–00 | 26 – 6 |
| 5YP–W0048–50 | 28 – 8 |
| 1WD–WF461–00 | 23 – 18 |
| 1WD–WF479–00 | 24 – 11 |
| 1WD–XF11W–10–P0 | 34 – 15 |
| 1WD–XF11W–50–P0 | 34 – 15 |
| 1WD–XF11X–10–P0 | 34 – 21 |
| 1WD–XF11X–60–P0 | 34 – 21 |
| 1WD–XF151–20–P0 | 18 – 1 |
| 1WD–XF151–20–P2 | 18 – 1 |
| 1WD–XF151–30–P1 | 18 – 1 |
| 1WD–XF171–30–P0 | 19 – 1 |
| 1WD–XF171–30–P1 | 19 – 1 |

| PART NO. CODIGO Nº | REF. NO. |
|---|---|
| 1WD–XF171–30–P2 | 19 – 1 |
| 1WD–XF172–30–P0 | 19 – 11 |
| 1WD–XF172–30–P1 | 19 – 11 |
| 1WD–XF172–30–P2 | 19 – 11 |
| 1WD–XF83F–10–P0 | 33 – 8 |
| 1WD–XF83F–20–P2 | 33 – 8 |
| 1WD–XF83F–40–P1 | 33 – 8 |
| 1WD–XF83L–40–P0 | 34 – 1 |
| 1WD–XF83L–50–P1 | 34 – 1 |
| 1WD–XF83L–60–P2 | 34 – 1 |
| 1WD–XF83M–40–P0 | 34 – 7 |
| 1WD–XF83M–50–P1 | 34 – 7 |
| 1WD–XF83M–60–P2 | 34 – 7 |
| 1WD–XH250–00 | 42 – 26 |
| 1WD–XH250–01 | 42 – 24 |
| 90105–06027 | 1 – 4 |
| 90105–07800 | 4 – 4 |
| 90105–088F7 | 10 – 6 |
| 90105–088F8 | 2 – 16 |
| 90105–088G0 | 10 – 7 |
| 90105–088G7 | 9 – 23 |
| 90105–106A7 | 31 – 5 |
| 90105–10883 | 2 – 8 |
| | 35 – 4 |
| 90105–10889 | 17 – 12 |
| 90105–10891 | 17 – 13 |
| 90105–12093 | 20 – 15 |
| 90105–12309 | 20 – 8 |
| 90105–14102 | 21 – 7 |
| 90109–05003 | 18 – 32 |
| 90109–060G4 | 42 – 25 |
| 90109–063F1 | 18 – 15 |
| 90109–06577 | 30 – 10 |
| 90109–06898 | 1 – 15 |
| 90109–06899 | 1 – 24 |
| 90109–085G6 | 31 – 17 |
| | 31 – 30 |
| 90110–05806 | 23 – 19 |
| 90110–06161 | 4 – 13 |
| | 4 – 15 |
| | 12 – 5 |
| 90110–06182 | 15 – 11 |
| 90110–06870 | 1 – 11 |
| 90110–08071 | 31 – 39 |
| | 31 – 47 |
| 90111–05003 | 19 – 37 |
| | 19 – 41 |
| | 19 – 43 |

| PART NO. CODIGO Nº | REF. NO. |
|---|---|
| 90111–05003 | 33 – 18 |
| | 34 – 37 |
| | 34 – 43 |
| 90111–05018 | 18 – 25 |
| 90111–05021 | 18 – 22 |
| 90111–06013 | 31 – 16 |
| 90111–06117 | 23 – 25 |
| | 34 – 41 |
| | 34 – 47 |
| | 40 – 2 |
| 90111–06119 | 20 – 13 |
| 90111–06121 | 32 – 20 |
| 90111–06137 | 18 – 8 |
| 90111–06152 | 9 – 30 |
| 90111–06802 | 9 – 8 |
| 90111–06847 | 9 – 13 |
| 90111–08815 | 26 – 2 |
| | 28 – 2 |
| 90116–10065 | 27 – 14 |
| 90119–05020 | 23 – 32 |
| | 23 – 39 |
| 90119–06810 | 19 – 10 |
| | 19 – 20 |
| | 34 – 27 |
| 90123–08083 | 41 – 18 |
| 90149–10804 | 26 – 13 |
| 90150–05023 | 33 – 13 |
| 90151–03005 | 41 – 17 |
| 90159–06054 | 24 – 13 |
| 90160–04009 | 43 – 20 |
| 90160–05810 | 19 – 39 |
| 90170–06023 | 16 – 14 |
| 90170–18221 | 13 – 11 |
| 90179–05849 | 33 – 2 |
| 90179–07652 | 2 – 4 |
| 90179–08316 | 41 – 19 |
| 90179–10805 | 17 – 14 |
| 90179–20013 | 14 – 33 |
| 90179–25615 | 21 – 3 |
| 90183–05076 | 18 – 16 |
| 90183–050A7 | 18 – 23 |
| | 19 – 3 |
| | 19 – 13 |
| | 33 – 7 |
| | 34 – 6 |
| | 34 – 11 |
| | 34 – 17 |
| | 34 – 23 |

| PART NO. CODIGO Nº | REF. NO. |
|---|---|
| 90183–05807 | 19 – 2 |
| | 19 – 12 |
| | 23 – 27 |
| | 23 – 33 |
| | 23 – 40 |
| | 33 – 9 |
| | 34 – 5 |
| | 34 – 12 |
| | 34 – 34 |
| | 40 – 5 |
| 90183–06011 | 9 – 20 |
| 90183–06815 | 34 – 35 |
| 90183–06818 | 9 – 9 |
| | 17 – 21 |
| 90201–04028 | 43 – 21 |
| 90201–04804 | 40 – 14 |
| 90201–05036 | 39 – 8 |
| 90201–05043 | 43 – 30 |
| 90201–05827 | 38 – 8 |
| 90201–06072 | 6 – 14 |
| 90201–06088 | 9 – 19 |
| 90201–06380 | 23 – 9 |
| | 23 – 15 |
| | 34 – 30 |
| 90201–08083 | 32 – 17 |
| 90201–08612 | 9 – 24 |
| 90201–087F0 | 9 – 26 |
| 90201–10021 | 16 – 19 |
| | 31 – 26 |
| 90201–10118 | 30 – 17 |
| | 32 – 24 |
| 90201–10119 | 7 – 6 |
| 90201–102R1 | 2 – 9 |
| | 35 – 5 |
| 90201–10843 | 13 – 16 |
| 90201–10845 | 1 – 10 |
| 90201–127E1 | 16 – 7 |
| 90201–16812 | 2 – 19 |
| 90201–17809 | 27 – 23 |
| 90201–20023 | 14 – 32 |
| 90201–20276 | 14 – 25 |
| 90201–22013 | 13 – 12 |
| 90202–05180 | 34 – 38 |
| | 34 – 44 |
| 90202–26142 | 21 – 4 |
| 90206–14001 | 16 – 18 |
| 90209–25011 | 14 – 15 |
| 90214–22008 | 14 – 3 |

| PART NO. CODIGO Nº | REF. NO. |
|---|---|
| 90214–22008 | 14 – 20 |
| 90215–18800 | 13 – 10 |
| 90240–08124 | 32 – 16 |
| 90240–08145 | 31 – 13 |
| | 31 – 22 |
| | 31 – 37 |
| | 31 – 45 |
| 90269–06081 | 18 – 19 |
| | 18 – 34 |
| | 19 – 9 |
| | 19 – 19 |
| | 19 – 23 |
| | 19 – 26 |
| | 33 – 17 |
| | 34 – 13 |
| | 34 – 53 |
| 90280–05013 | 35 – 6 |
| 90282–04036 | 2 – 17 |
| 90338–05010 | 29 – 4 |
| | 29 – 8 |
| | 33 – 30 |
| 90338–09012 | 30 – 14 |
| | 41 – 21 |
| 90338–16262 | 10 – 2 |
| 90338–23801 | 17 – 16 |
| 90340–12808 | 7 – 14 |
| 90340–18002 | 1 – 5 |
| 90340–32819 | 11 – 5 |
| 90387–05042 | 40 – 16 |
| 90387–06242 | 20 – 12 |
| 90387–06299 | 23 – 8 |
| | 23 – 14 |
| 90387–064W3 | 6 – 15 |
| 90387–066J9 | 18 – 28 |
| 90387–067V1 | 40 – 3 |
| 90387–06857 | 19 – 30 |
| 90387–06899 | 19 – 5 |
| | 19 – 15 |
| | 23 – 24 |
| | 23 – 31 |
| | 23 – 38 |
| | 34 – 18 |
| | 34 – 24 |
| | 34 – 39 |
| | 34 – 45 |
| 90387–068C2 | 33 – 29 |
| 90387–068C5 | 18 – 4 |
| 90387–068L0 | 18 – 5 |

| PART NO. CODIGO Nº | REF. NO. |
|---|---|
| 90387–068L9 | 18 – 29 |
| 90387–068N4 | 9 – 18 |
| 90387–07819 | 17 – 19 |
| 90387–087L0 | 9 – 12 |
| | 9 – 29 |
| 90387–08813 | 17 – 29 |
| | 31 – 49 |
| 90387–10010 | 31 – 6 |
| 90387–17810 | 27 – 2 |
| 90387–20814 | 14 – 24 |
| 90401–10812 | 30 – 16 |
| | 32 – 23 |
| 90401–20008 | 7 – 12 |
| 90430–06014 | 4 – 8 |
| | 5 – 16 |
| | 10 – 11 |
| 90430–08119 | 1 – 7 |
| 90430–08143 | 11 – 4 |
| 90430–10804 | 43 – 7 |
| 90445–217G3 | 31 – 8 |
| 90450–28001 | 6 – 7 |
| 90450–55804 | 8 – 4 |
| 90462–08225 | 11 – 24 |
| 90462–08806 | 11 – 20 |
| 90462–08810 | 7 – 18 |
| 90462–08812 | 11 – 19 |
| 90464–12015 | 17 – 23 |
| 90464–14803 | 42 – 22 |
| 90464–16003 | 41 – 7 |
| 90464–16012 | 23 – 54 |
| 90464–22800 | 42 – 23 |
| 90464–30001 | 41 – 8 |
| 90464–30009 | 17 – 22 |
| 90464–36800 | 42 – 20 |
| 90464–70800 | 42 – 21 |
| 90467–08003 | 19 – 35 |
| 90467–09006 | 23 – 57 |
| 90467–110A3 | 8 – 34 |
| 90467–12052 | 8 – 39 |
| 90467–12085 | 32 – 14 |
| 90467–13802 | 8 – 38 |
| | 8 – 41 |
| 90467–15012 | 23 – 52 |
| 90467–16800 | 1 – 36 |
| 90467–16801 | 1 – 33 |
| | 1 – 35 |
| 90467–250A1 | 6 – 6 |
| 90480–01558 | 23 – 21 |

NUMERICAL INDEX
INDICE NUMERICO


| PART NO. CODIGO Nº | REF. NO. |
|---|---|
| 90480–01558 | 34 – 14 |
| | 34 – 19 |
| | 34 – 25 |
| 90480–01559 | 23 – 35 |
| | 23 – 42 |
| 90480–10003 | 40 – 6 |
| 90480–11009 | 40 – 15 |
| 90480–12581 | 9 – 11 |
| | 9 – 28 |
| 90480–12808 | 19 – 4 |
| | 19 – 14 |
| | 23 – 23 |
| | 23 – 30 |
| | 23 – 37 |
| | 34 – 20 |
| | 34 – 26 |
| | 34 – 40 |
| | 34 – 46 |
| 90480–12815 | 18 – 6 |
| 90480–13001 | 40 – 4 |
| 90480–13398 | 17 – 18 |
| 90480–14004 | 38 – 6 |
| | 39 – 7 |
| 90480–15807 | 23 – 13 |
| 90480–15808 | 6 – 16 |
| 90480–15809 | 18 – 7 |
| 90501–06022 | 15 – 3 |
| 90501–080A2 | 15 – 8 |
| 90501–12743 | 31 – 34 |
| | 31 – 42 |
| 90501–22800 | 2 – 20 |
| 90506–23812 | 31 – 4 |
| 90506–26807 | 31 – 27 |
| 90508–18136 | 13 – 18 |
| 90508–183B9 | 31 – 12 |
| | 31 – 21 |
| 90508–29806 | 16 – 5 |
| 90520–03823 | 23 – 3 |
| 91312–05008 | 42 – 17 |
| 91312–05010 | 23 – 20 |
| | 23 – 48 |
| | 29 – 21 |
| 91312–05012 | 11 – 2 |
| 91312–06010 | 5 – 13 |
| 91312–06016 | 8 – 3 |
| | 43 – 11 |
| 91312–06020 | 1 – 23 |
| | 4 – 10 |

| PART NO. CODIGO Nº | REF. NO. |
|---|---|
| 91312–06025 | 11 – 15 |
| 91312–06030 | 7 – 8 |
| | 35 – 3 |
| 91317–06016 | 29 – 3 |
| | 29 – 7 |
| 91317–06020 | 29 – 15 |
| 91317–06025 | 33 – 28 |
| 91317–08020 | 29 – 2 |
| | 29 – 6 |
| 91317–08030 | 21 – 8 |
| 91317–10020 | 17 – 26 |
| 91317–10045 | 17 – 27 |
| 91317–10060 | 17 – 10 |
| 91401–20012 | 32 – 18 |
| 91401–25015 | 31 – 14 |
| | 31 – 23 |
| | 31 – 38 |
| | 31 – 46 |
| 92012–06012 | 29 – 18 |
| | 29 – 23 |
| 92012–08030 | 32 – 19 |
| 92014–08012 | 11 – 3 |
| 92902–08600 | 13 – 20 |
| | 27 – 26 |
| 92902–10200 | 17 – 11 |
| 92907–10600 | 17 – 28 |
| 93101–20802 | 14 – 11 |
| | 14 – 27 |
| 93102–12891 | 16 – 10 |
| 93102–15801 | 5 – 5 |
| 93102–35803 | 14 – 30 |
| 93106–23002 | 27 – 4 |
| 93106–26815 | 25 – 3 |
| 93106–38046 | 27 – 8 |
| 93210–068F7 | 10 – 13 |
| 93210–108H5 | 41 – 14 |
| 93210–12803 | 10 – 3 |
| 93210–15620 | 32 – 7 |
| 93210–16716 | 1 – 29 |
| 93210–21801 | 43 – 4 |
| 93210–27807 | 5 – 20 |
| 93210–32816 | 11 – 6 |
| 93210–39802 | 8 – 2 |
| 93306–20314 | 27 – 3 |
| 93306–255Y9 | 14 – 8 |
| 93306–302X4 | 25 – 4 |
| 93306–30450 | 27 – 7 |
| 93311–420Y3 | 14 – 10 |

| PART NO. CODIGO Nº | REF. NO. |
|---|---|
| 93311–420Y3 | 14 – 26 |
| 93315–21570 | 5 – 4 |
| 93317–11096 | 5 – 3 |
| 93317–11295 | 16 – 9 |
| 93320–32403 | 20 – 5 |
| 93399–99932 | 22 – 37 |
| 93399–999Y3 | 21 – 1 |
| 93440–24200 | 14 – 4 |
| | 14 – 21 |
| 93440–28184 | 14 – 16 |
| 93440–52009 | 14 – 9 |
| 93450–16068 | 2 – 14 |
| 93501–04830 | 31 – 35 |
| | 31 – 43 |
| 93605–10090 | 2 – 21 |
| 93900–00828 | 25 – 6 |
| | 27 – 17 |
| 94111–17803 | 25 – 5 |
| 94114–17803 | 27 – 16 |
| 94568–H3112 | 27 – 29 |
| 94591–61118 | 4 – 5 |
| 94700–00872 | 1 – 12 |
| 95022–06008 | 4 – 7 |
| 95022–06010 | 38 – 9 |
| 95022–06012 | 24 – 4 |
| | 34 – 49 |
| 95022–06014 | 17 – 20 |
| 95022–06020 | 6 – 3 |
| | 42 – 4 |
| 95022–06025 | 5 – 17 |
| | 7 – 17 |
| | 11 – 9 |
| | 11 – 12 |
| | 11 – 18 |
| | 11 – 23 |
| | 36 – 7 |
| 95022–06050 | 11 – 13 |
| 95022–08012 | 1 – 6 |
| 95022–08014 | 23 – 17 |
| 95027–06010 | 9 – 3 |
| 95027–06025 | 30 – 13 |
| 95027–06045 | 18 – 9 |
| 95027–08035 | 9 – 17 |
| 95302–06600 | 16 – 15 |
| 95302–08600 | 27 – 27 |
| 95602–05100 | 43 – 29 |
| 95602–06100 | 30 – 9 |
| | 41 – 15 |

| PART NO. CODIGO Nº | REF. NO. |
|---|---|
| 95602–06200 | 18 – 30 |
| 95602–10200 | 27 – 15 |
| | 31 – 7 |
| 95602–12100 | 20 – 10 |
| | 20 – 16 |
| 95602–14200 | 20 – 6 |
| | 25 – 10 |
| 95602–16200 | 27 – 22 |
| 95607–08200 | 9 – 31 |
| 95612–08625 | 1 – 8 |
| 95702–06500 | 18 – 12 |
| | 30 – 19 |
| | 34 – 29 |
| 95707–06500 | 24 – 9 |
| 95707–08500 | 9 – 22 |
| 95802–06010 | 31 – 29 |
| 95802–06016 | 43 – 15 |
| 95802–06025 | 43 – 17 |
| 95802–08012 | 43 – 25 |
| 95807–06016 | 43 – 27 |
| 95812–06012 | 23 – 11 |
| 95812–06035 | 10 – 8 |
| 95812–06045 | 10 – 9 |
| 95812–06065 | 10 – 10 |
| 95812–08035 | 33 – 22 |
| 95817–08030 | 9 – 25 |
| 95817–10025 | 31 – 3 |
| 95822–06010 | 8 – 36 |
| 95822–06025 | 23 – 10 |
| | 23 – 16 |
| 95827–06014 | 32 – 26 |
| 95827–06025 | 6 – 13 |
| 97012–06020 | 16 – 20 |
| 97507–06525 | 41 – 20 |
| 97602–04212 | 30 – 12 |
| 97702–30016 | 38 – 4 |
| 97702–50016 | 24 – 14 |
| | 33 – 6 |
| | 38 – 7 |
| 97702–50025 | 8 – 28 |
| 97707–40020 | 40 – 13 |
| 97707–50012 | 23 – 26 |
| | 23 – 34 |
| | 23 – 41 |
| 97707–50016 | 18 – 24 |
| | 19 – 22 |
| | 19 – 25 |
| | 19 – 28 |

| PART NO. CODIGO Nº | REF. NO. |
|---|---|
| 97707–50016 | 34 – 28 |
| | 34 – 33 |
| | 34 – 52 |
| | 34 – 55 |
| | 39 – 9 |
| 98502–05016 | 43 – 5 |
| 98502–06012 | 8 – 11 |
| 98507–05012 | 29 – 20 |
| 98902–05020 | 8 – 31 |
| 99002–07600 | 13 – 21 |
| 99009–08400 | 5 – 11 |
| 99009–10400 | 7 – 5 |
| | 13 – 17 |
| 99009–12400 | 16 – 6 |
| 99009–15500 | 7 – 2 |
| 99530–08012 | 7 – 7 |
| | 11 – 8 |
| | 11 – 11 |
| 99530–10014 | 10 – 5 |
| 99530–14016 | 1 – 14 |
| | 1 – 30 |

| PART NO. CODIGO Nº | REF. NO. |
|---|---|