MITSUBISHI MOTORS

# Workshop Manual

6G72 2.972cc V6
6G73 3.496cc V6
4D56 2.477cc Turbo Diesel
4M41 3.400cc Turbo Diesel

# PAJERO

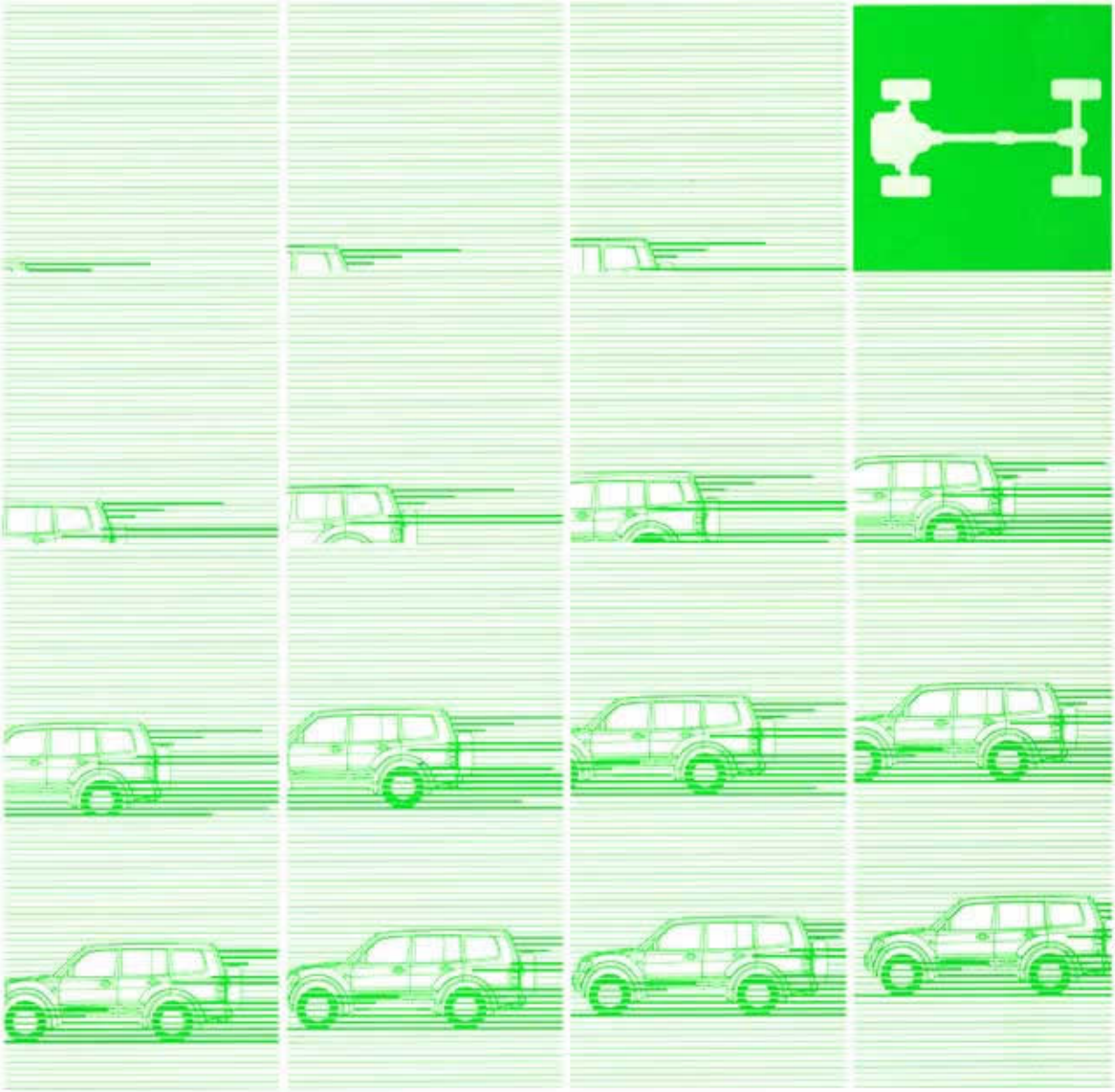

# PAJERO

# WORKSHOP MANUAL

## FOREWORD

This Workshop Manual contains procedures for service mechanics, including removal, disassembly, inspection, adjustment, reassembly and installation. Use the following manuals in combination with this manual as required.

| | |
|---|---|
| TECHNICAL INFORMATION MANUAL | PYJE0001 |
| WORKSHOP MANUAL | |
| ENGINE GROUP | PWEE____ (Looseleaf edition) |
| CHASSIS GROUP | PWJE0001 |
| ELECTRICAL WIRING | PHJE0001 |
| BODY REPAIR MANUAL | PBJE0001 |
| PARTS CATALOGUE | B603H601A□ |

All information, illustrations and product descriptions contained in this manual are current as at the time of publication. We, however, reserve the right to make changes at any time without prior notice or obligation.


General ..... 00
Engine ..... 11
Engine Lubrication ..... 12
Fuel ..... 13
Engine Cooling ..... 14
Intake and Exhaust ..... 15
Engine Electrical ..... 16
Engine and Emission Control .... 17
Clutch ..... 21
Manual Transmission ..... 22
Automatic Transmission ..... 23
Propeller Shaft ..... 25
Front Axle ..... 26
Rear Axle ..... 27
Wheel and Tyre ..... 31
Power Plant Mount ..... 32
Front Suspension ..... 33
Rear Suspension ..... 34
Service Brakes ..... 35
Parking Brakes ..... 36
Steering ..... 37
Body ..... 42
Exterior ..... 51
Interior and Supplemental Restraint System (SRS) ..... 52
Chassis Electrical ..... 54
Heater, Air Conditioner and Ventilation ..... 55



MITSUBISHI MOTORS CORPORATION



"GDI" is a trade mark of Mitsubishi Motors Corporation.

© Mitsubishi Motors Corporation February 2000

**WARNING!**

**(1) Improper service or maintenance of any component of the SRS and any SRS-related component, can lead to personal injury or death to service personnel (from inadvertent firing of the air bag or to the driver and passenger (from rendering the SRS inoperative).**

**(2) SRS components should not be subjected to heat, so remove the SRS-ECU, air bag module (driver's side and front passenger's side), clock spring, side impact sensor and front seat assembly (side air bag module) before drying or baking the vehicle after painting.**
**SRS-ECU, air bag module, clock spring and side impact sensor: 93°C or more**

**(3) Service or maintenance of any SRS component and SRS-related component must be performed only at an authorized MITSUBISHI dealer.**

**(4) MITSUBISHI dealer personnel must thoroughly review this manual, and especially its GROUP 52B - Supplemental Restraint System (SRS), before beginning any service or maintenance of any component of the SRS and any SRS-related component.**

NOTE
Section titles with asterisks (*) in the table of contents in each group indicate operations requiring warnings.

# ENGINE

## CONTENTS

ENGINE <6G7> . . . . . 11A

ENGINE <4D5> . . . . . 11B

ENGINE <4M4> . . . . . 11C

# FUEL

## CONTENTS

GASOLINE DIRECT INJECTION (GDI) . . . . . 13A

DIESEL FUEL <4D5> . . . . . 13B

DIESEL FUEL <4M4> . . . . . 13C

FUEL SUPPLY . . . . . 13D

# SERVICE BRAKES

## CONTENTS

BASIC BRAKE SYSTEM ..... 35A

ANTI-SKID BRAKING SYSTEM (ABS) <4WD> ..... 35B

# INTERIOR AND SUPPLEMENTAL RESTRAINT SYSTEM (SRS)

## CONTENTS

INTERIOR ..... 52A

SUPPLEMENTAL RESTRAINT SYSTEM (SRS) ..... 52B

# CHASSIS ELECTRICAL

## CONTENTS

CHASSIS ELECTRICAL . . . . . 54A

SMART WIRING SYSTEM (SWS) . . . . . 54B

Purchased from www.WorkshopManuals.co.uk

# HEATER, AIR CONDITIONER AND VENTILATION

CONTENTS

MANUAL A/C ..... 55A

AUTOMATIC A/C ..... 55B

Purchased from www.WorkshopManuals.co.uk

# GENERAL

**Click on the applicable bookmark to selected the required model year.**

Purchased from www.WorkshopManuals.co.uk

www.WorkshopManuals.co.uk


# GENERAL

## CONTENTS

**HOW TO USE THIS MANUAL . . . . . 2**
- Scope of Maintenance, Repair and Servicing Explanations . . . . . 2
- Definition of Terms . . . . . 2
- Indication of Tightening Torque . . . . . 2
- Model Indications . . . . . 3
- Explanation of Manual Contents . . . . . 4

**HOW TO USE TROUBLESHOOTING/INSPECTION SERVICE POINTS . . . . . 6**
- Troubleshooting Contents . . . . . 6
- Diagnosis Function . . . . . 7
- How to Use the Inspection Procedures . . . . . 10
- Connector Measurement Service Points . . . . . 11
- Connector Inspection . . . . . 12
- Inspection Service Points for a Blown Fuse . . . 13
- Points to Note for Intermittent Malfunctions . . . . 13

**TREATMENT BEFORE/AFTER THE FORDING A STREAM . . . . . 14**
- Inspection and Service before Fording a Stream . . . . . 14
- Inspection and Service after Fording a Stream . . . . . 15

**VEHICLE IDENTIFICATION . . . . . 16**
- Vehicle Information Code Plate . . . . . 16
- Models . . . . . 16
- Model Code . . . . . 18
- Chassis Number . . . . . 19
- Engine Model Number . . . . . 20
- Theft Protection <For R.H.D.> . . . . . 21

**MAJOR SPECIFICATIONS . . . . . 23**

**PRECAUTIONS BEFORE SERVICE . . . . . 29**

**SUPPLEMENTAL RESTRAINT SYSTEM (SRS) . . . . . 33**

**SUPPORT LOCATIONS FOR LIFTING AND JACKING . . . . . 37**
- Support Positions for a Garage Jack . . . . . 37
- Support Positions for axle stands and a Single-Post Lift or Double-Post Lift . . . . . 38

**STANDARD PARTS-TIGHTENING-TORQUE TABLE . . . . . 39**

Purchased from www.WorkshopManuals.co.uk

# HOW TO USE THIS MANUAL

## SCOPE OF MAINTENANCE, REPAIR AND SERVICING EXPLANATIONS

This manual provides explanations, etc. concerning procedures for the inspection, maintenance, repair and servicing of the subject model. Note, however, that for engine and transmission-related component parts, this manual covers only on-vehicle inspections, adjustments, and the removal and installation procedures for major components.
For detailed information concerning the inspection, checking, adjustment, disassembly and reassembly of the engine, transmission and major components after they have been removed from the vehicle, please refer to separate manuals covering the engine and the transmission.

**ON-VEHICLE SERVICE**

"On-vehicle Service" is procedures for performing inspections and adjustments of particularly important locations with regard to the construction and for maintenance and servicing, but other inspection (for looseness, play, cracking, damage, etc.) must also be performed.

**INSPECTION**

Under this title are presented inspection and checking procedures to be performed by using special tools and measuring instruments and by feeling, but, for actual maintenance and servicing procedures, visual inspections should always be performed as well.

## DEFINITION OF TERMS

**STANDARD VALUE**

Indicates the value used as the standard for judging the quality of a part or assembly on inspection or the value to which the part or assembly is corrected and adjusted. It is given by tolerance.

**LIMIT**

Shows the standard for judging the quality of a part or assembly on inspection and means the maximum or minimum value within which the part or assembly must be kept functionally or in strength. It is a value established outside the range of standard value.

**REFERENCE VALUE**

Indicates the adjustment value prior to starting the work (presented in order to facilitate assembly and adjustment procedures, and so they can be completed in a shorter time).

**CAUTION**

Indicates the presentation of information particularly vital to the worker during the performance of maintenance and servicing procedures in order to avoid the possibility of injury to the worker, or damage to component parts, or a reduction of component or vehicle function or performance, etc.

## INDICATION OF TIGHTENING TORQUE

Tightening torques (units: N·m) are set to take into account the central value and the allowable tolerance. The central value is the target value, and the allowable tolerance provides the checking range for tightening torques. If bolts and nuts are not provided with tightening torques, refer to P.00-39.

www.WorkshopManuals.co.uk

## MODEL INDICATIONS

The following abbreviations are used in this manual for classification of model types.

GDI: Indicates the gasoline direct injection.
DOHC: Indicates an engine with the double overhead camshaft, or models equipped with such an engine.
M/T: Indicates the manual transmission, or models equipped with the manual transmission.
A/T: Indicates the automatic transmission, or models equipped with the automatic transmission.
A/C: Indicates the air conditioner.

Purchased from www.WorkshopManuals.co.uk

www.WorkshopManuals.co.uk

## EXPLANATION OF MANUAL CONTENTS

Indicates procedures to be performed before the work in that section is started, and procedures to be performed after the work in that section is finished.

**Component Diagram**
A diagram of the component parts is provided near the front of each section in order to give a reader a better understanding of the installed condition of component parts.

Indicates (by symbols) where lubrication is necessary.

**Maintenance and Servicing Procedures**
The numbers provided within the diagram indicate the sequence for maintenance and servicing procedures.

- Removal steps:
  The part designation number corresponds to the number in the illustration to indicate removal steps.
- Disassembly steps:
  The part designation number corresponds to the number in the illustration to indicate disassembly steps.
- Installation steps:
  Specified in case installation is impossible in reverse order of removal steps. Omitted if installation is possible in reverse order of removal steps.
- Reassembly steps:
  Specified in case reassembly is impossible in reverse order of disassembly steps. Omitted if reassemby is possible in reverse order of disassembly steps.

**Classifications of Major Maintenance/Service Points**

When there are major points relative to maintenance and servicing procedures (such as essential maintenance and service points, maintenance and service standard values, information regarding the use of special tools, etc.), these are arranged together as major maintenance and service points and explained in detail.

◀A▶ : Indicates that there are essential points for removal or disassembly.
▶A◀ : Indicates that there are essential points for installation or reassembly.

**Symbols for Lubrication, Sealants and Adhesives**

Information concerning the locations for lubrication and for application of sealants and adhesives is provided, by using symbols, in the diagram of component parts or on the page following the component parts page, and explained.

: Grease
(multipurpose grease unless there is a brand or type specified)

: Sealant or adhesive

: Brake fluid or automatic transmission fluid

: Engine oil, gear oil or air conditioner compressor oil

: Adhesive tape or butyl rubber tape

Purchased from www.WorkshopManuals.co.uk

www.WorkshopManuals.co.uk

Indicates the group title.

Indicates the section title.

Indicates the group number.

Indicates the page number.

STEERING – Power Steering Oil Pump 37A-29

## POWER STEERING GEAR BOX

120000039

### REMOVAL AND INSTALLATION

Pre-removal Operation
(1) Power Steering Fluid Draining (Refer to P. 37A-10.)
(2) Air Cleaner Assembly Removal
(3) Under Cover Removal (Refer to GROUP 42 – Under Cover.)

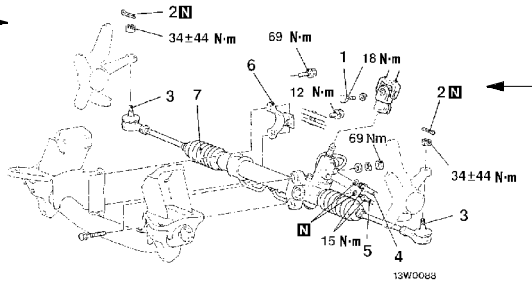


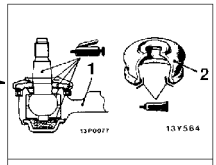


Sealant: 3M ATD Part No. 8661 or equivalent

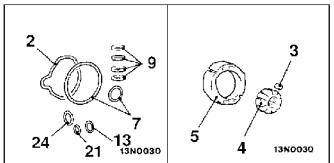


Oil pump seal kit | Oil pump cartridge kit

Removal steps
1. Lower shaft assembly and gear box connecting bolt
2. Split pin
3. Connection for tie-rod end and knuckle
4. Connection for return tube
5. Connection for pressure tube
6. Clamp
7. Gear box assembly

◀A▶ ◀B▶

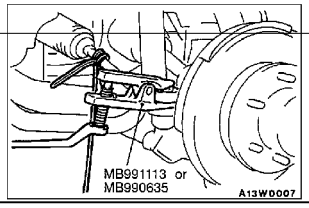


### REMOVAL SERVICE POINTS

◀A▶ TIE-ROD END DISCONNECTION

Caution
1. Using the special tool, loosen the tie rod end mounting nut. Only loosen the nut; do not remove it from the ball joint.
2. Support the special tool with a cord, etc. to prevent it from coming off.

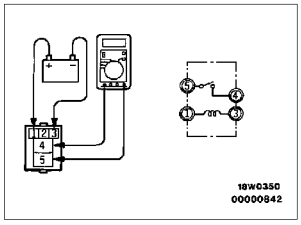


### HEADLAMP RELAY CONTINUITY INSPECTION

| Battery voltage | Terminal No. | | | |
|---|---|---|---|---|
| | 1 | 3 | 4 | 5 |
| Power is not supplied | ○ | ○ | | |
| Power is supplied | ⊕ | ⊖ | ○ | ○ |

35A-26 BASIC BRAKE SYSTEM – Master Cylinder and Brake Booster

Lubrication and sealing points

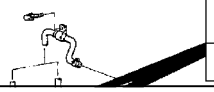

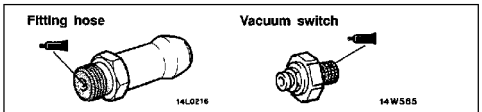


Sealant: 3M ATD Part No. 8663 or equivalent

00002471

N denotes non-reusable part.

Denotes tightening torque. For bolts and nuts which do not have a tightening torque listed, refer to the "Standard Parts-tightening-torque Table".

Repair kit or set parts are shown. (Only very frequently used parts are shown.)

Operating procedures, cautions, etc. on removal, installation, disassembly and reassembly are described.

○——○ indicates that there is a continuity between the terminals.
⊕——⊖ indicates terminals to which battery voltage is applied.

The title of the page (following the page on which the diagram of component parts is presented) indicating the locations of lubrication and sealing procedures.

Purchased from www.WorkshopManuals.co.uk

www.WorkshopManuals.co.uk

# HOW TO USE TROUBLESHOOTING/INSPECTION SERVICE POINTS

Troubleshooting of electronic control systems for which the MUT-II can be used follows the basic outline described below. Furthermore, even in systems for which the MUT-II cannot be used, part of these systems still follow this outline.

## TROUBLESHOOTING CONTENTS

### 1. STANDARD FLOW OF DIAGNOSIS TROUBLESHOOTING

The troubleshooting sections follow the basic diagnosis flow which is given below. If the diagnosis flow is different from that given below, or if additional explanation is required, the details of such differences or additions will also be listed.

**Diagnosis method**

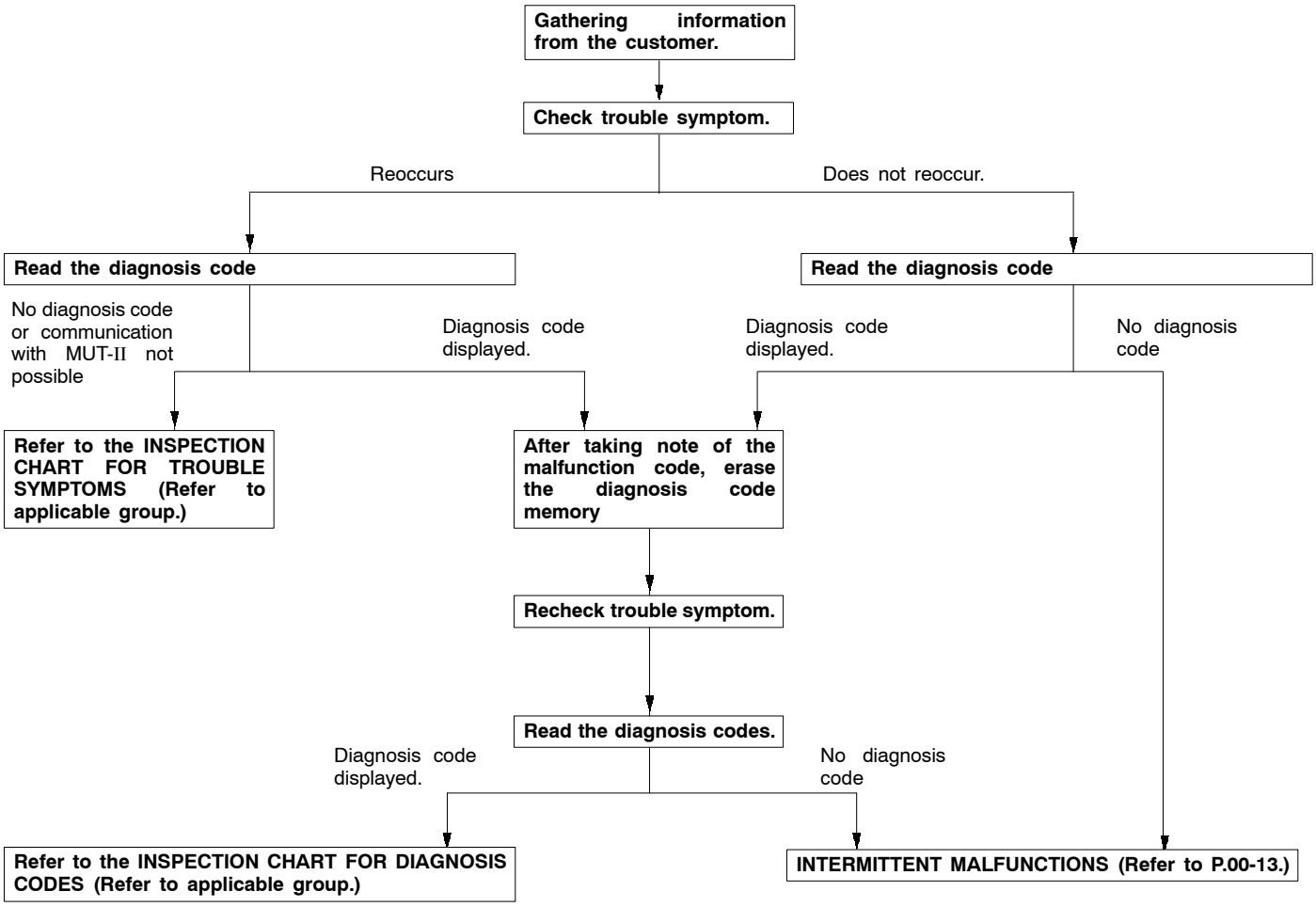


### 2. SYSTEM OPERATION AND SYMPTOM VERIFICATION TESTS

If verification of the trouble symptoms is difficult, procedures for checking operation and verifying trouble symptoms are shown.

### 3. DIAGNOSIS FUNCTION

Details which are different from those in the “Diagnosis Function” section on the next page are listed.

Purchased from www.WorkshopManuals.co.uk

www.WorkshopManuals.co.uk

**4. INSPECTION CHART FOR DIAGNOSIS CODES**

**5. INSPECTION PROCEDURE FOR DIAGNOSIS CODES**

Indicates the inspection procedures corresponding to each diagnosis code. (Refer to P.00-10 for how to use the inspection procedures.)

**6. INSPECTION CHART FOR TROUBLE SYMPTOMS**

If there are trouble symptoms even though the results of inspection using the MUT-II show that all diagnosis codes are normal, inspection procedures for each trouble symptom will be found by means of this chart.

**7. INSPECTION PROCEDURE FOR TROUBLE SYMPTOM**

Indicates the inspection procedures corresponding to each trouble symptoms classified in the Inspection Chart for Trouble Symptoms. (Refer to P.00-10 for how to use the inspection procedures.)

**8. SERVICE DATA REFERENCE TABLE**

Inspection items and normal judgement values have been provided in this chart as reference information.

**9. CHECK AT ECU TERMINALS**

Terminal numbers for the ECU connectors, inspection items and standard values have been provided in this chart as reference information.

**10. INSPECTION PROCEDURES USING AN OSCILLOSCOPE**

When there are inspection procedures using an oscilloscope, these are listed here.

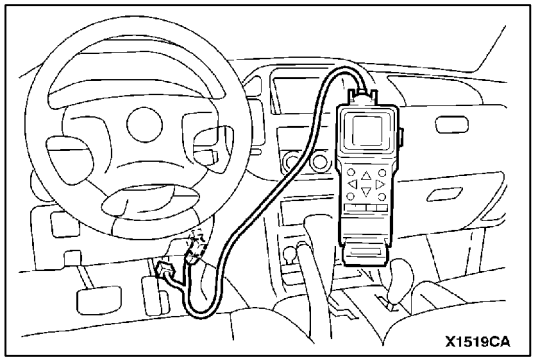


## DIAGNOSIS FUNCTION

### METHOD OF READING DIAGNOSIS CODES WHEN USING THE MUT-II

Connect the MUT-II to the diagnosis connector and take a reading of the diagnosis codes.

**Caution**
**Turn the ignition switch to "LOCK(OFF)" position before connecting or disconnecting the MUT-II.**

Purchased from www.WorkshopManuals.co.uk

www.WorkshopManuals.co.uk

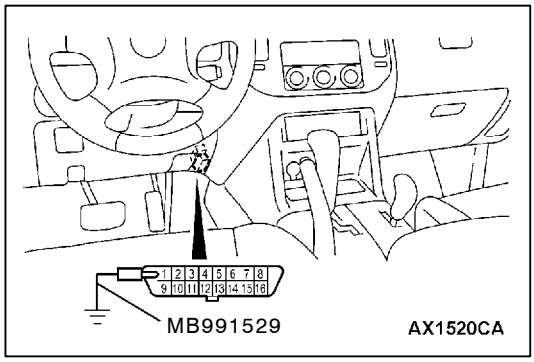


### WHEN USING THE WARNING LAMP

1. Use the special tool to earth No.1 terminal (diagnosis control terminal) of the diagnosis connector.
2. Turn on the ignition switch.
3. Read out a diagnosis code by observing how the warning lamp flashes.

**Applicable systems**

| System name | Warning lamp name |
|---|---|
| A/T | Neutral position indicator lamp |
| ABS | ABS warning lamp |
| SS4 II | 4WD warning lamp |
| Hydraulic Brake Booster(HBB) | Brake warning lamp |

**Indication of diagnosis code by warning lamp**

| When the diagnosis code No.24 is output | When no diagnosis code is output* |
|---|---|
| 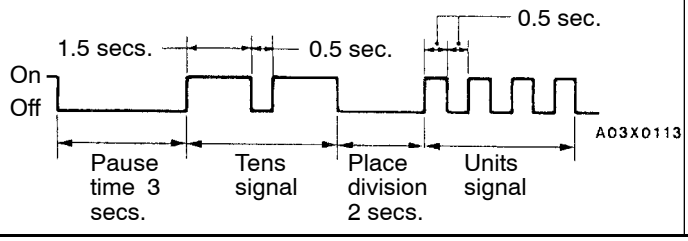 | 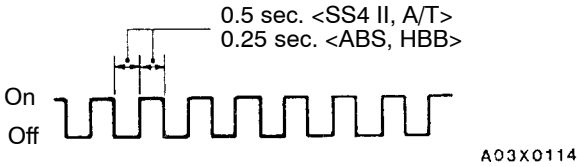 |





NOTE
*: Even if the ABS system is normal, removing the valve relay causes the diagnosis code No.52 to be output.

### METHOD OF ERASING DIAGNOSIS CODES

### WHEN USING THE MUT-II

Connect the MUT-II to the diagnosis connector and erase the diagnosis code.

**Caution**
**Turn the ignition switch to "LOCK (OFF)" position before connecting or disconnecting the MUT-II.**

### WHEN NOT USING THE MUT-II

1. Turn the ignition switch to "LOCK(OFF)" position.
2. After disconnecting the battery cable from the battery (-) terminal for 10 seconds or more, reconnect the cable.
3. After the engine has warmed up, run it at idle for about 15 minutes.

Purchased from www.WorkshopManuals.co.uk

www.WorkshopManuals.co.uk

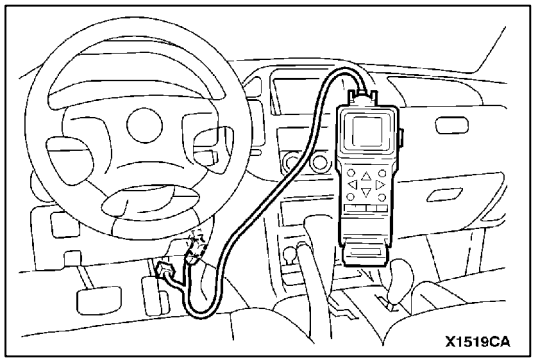


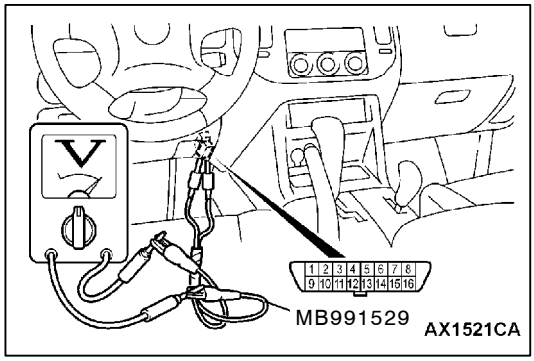


**INPUT SIGNAL CHECK <SWS>**

**WHEN USING THE MUT-II**

(1) Connect the MUT-II to the diagnosis connector and erase the diagnosis code.

**Caution**
**Turn the ignition switch to "LOCK (OFF)" position before connecting or disconnecting the MUT-II.**

(2) If the MUT-II buzzer sounds once when each switch is operated (ON/OFF), the input signal for that switch circuit system is normal.

**WHEN USING A VOLTMETER**

(1) Use the special tool to connect the ETACS terminal (terminal 9) and the earth terminals (terminals 4 and 5) of the diagnosis connector to the voltage meter.
(2) If the needle of the voltage meter flickers once when each switch is operated (ON/OFF), the input signal for that switch circuit system is normal.

Purchased from www.WorkshopManuals.co.uk

www.WorkshopManuals.co.uk

## HOW TO USE THE INSPECTION PROCEDURES

The causes of a high frequency of problems occurring in electronic circuitry are generally the connectors, components, the ECU and the harnesses between connectors, in that order. These inspection procedures follow this order, and they first try to discover a problem with a connector or a defective component.

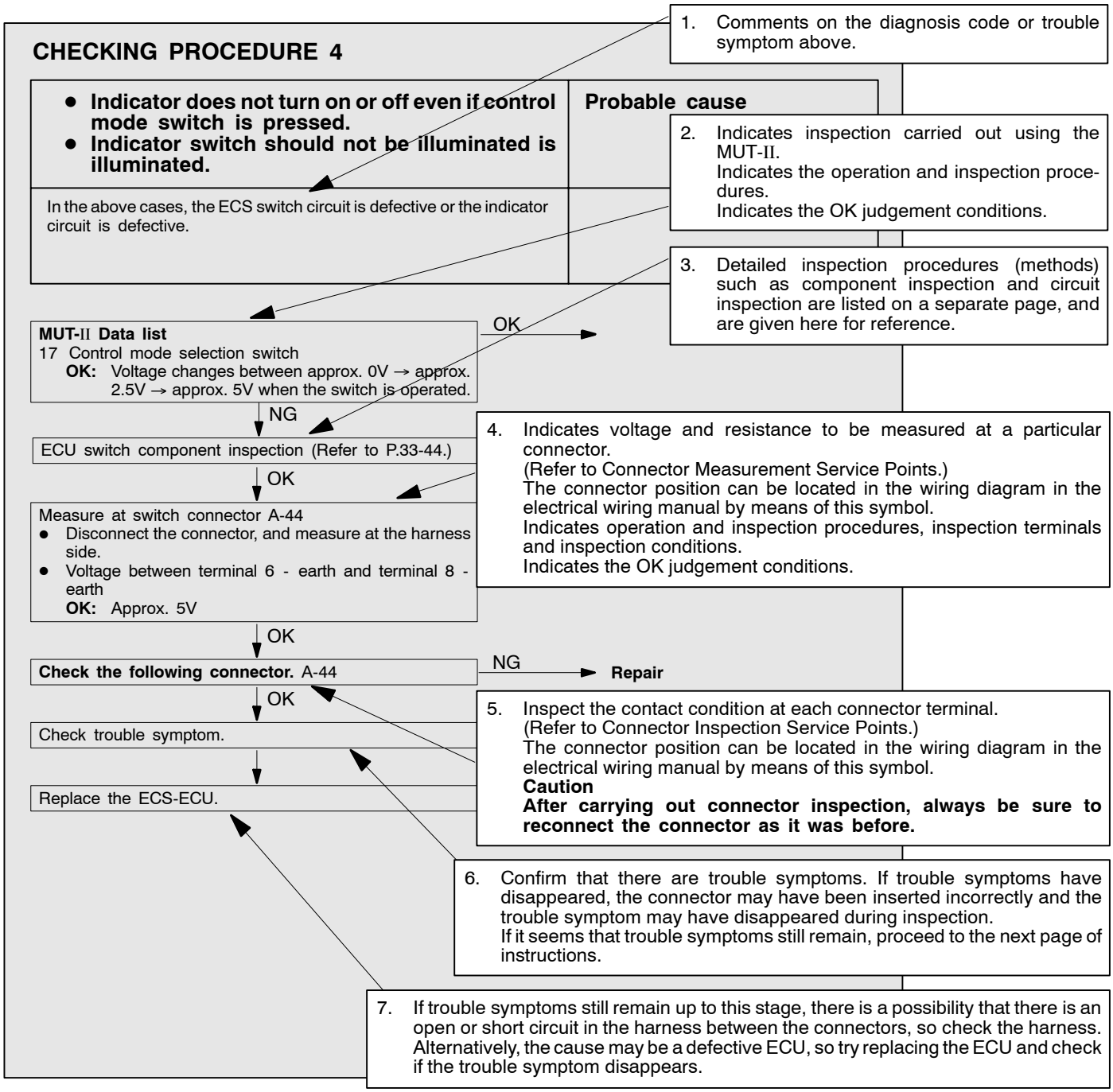


### HARNESS INSPECTION

Check for an open or short circuit in the harness between the terminals which were defective according to the connector measurements. Carry out this inspection while referring to the electrical wiring manual. Here, “Check harness between power supply and terminal xx” also includes checking for blown fuses. For inspection service points when there is a blown fuse, refer to “Inspection Service Points for a Blown Fuse.”

### MEASURES TO TAKE AFTER REPLACING THE ECU

If the trouble symptoms have not disappeared even after replacing the ECU, repeat the inspection procedure from the beginning.

Purchased from www.WorkshopManuals.co.uk

www.WorkshopManuals.co.uk

## CONNECTOR MEASUREMENT SERVICE POINTS

Turn the ignition switch to OFF when connecting disconnecting the connectors, and turn the ignition switch to ON when measuring if there are no instructions to be contrary.

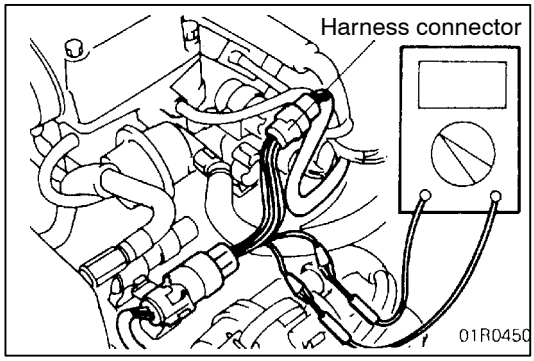


### IF INSPECTING WITH THE CONNECTOR CONNECTED (WITH CIRCUIT IN A CONDITION OF CONTINUITY)

**Waterproof Connectors**

Be sure to use the special tool (harness connector). Never insert a test bar from the harness side, because to do so will reduce the waterproof performance and result in corrosion.

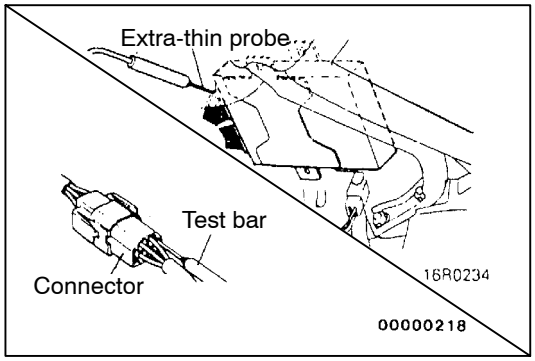


**Ordinary (non-waterproof) Connectors**

Check by inserting the test bar from the harness side. Note that if the connector (control unit, etc.) is too small to permit insertion of the test bar, it should not be forced; use a special tool (the extra-thin probe in the harness set for checking for this purpose.

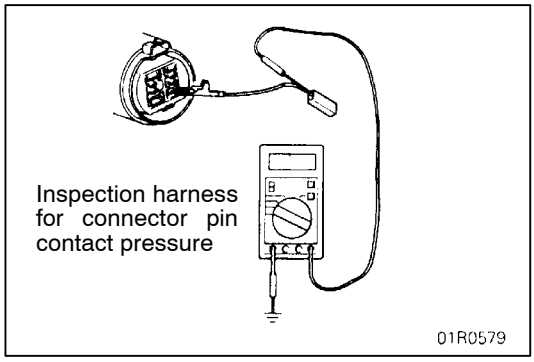


### IF INSPECTING WITH THE CONNECTOR DISCONNECTED

**<When Inspecting a Female Pin>**

Use the special tool (inspection harness for connector pin contact pressure in the harness set for inspection).
The inspection harness for connector pin contact pressure should be used. the test bar should never be forcibly inserted, as it may cause a defective contact.

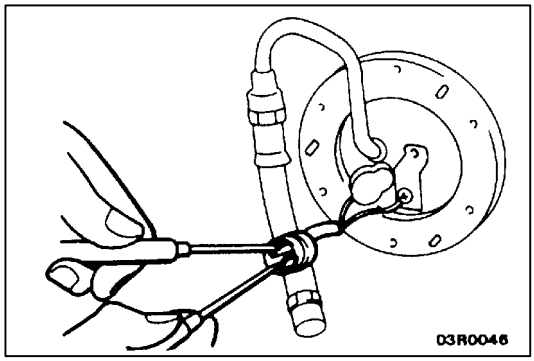


**<When Inspecting a Male Pin>**

Touch the pin directly with the test bar.

**Caution**

**At this time, be careful not to short the connector pins with the test bars. To do so may damage the circuits inside the ECU.**

Purchased from www.WorkshopManuals.co.uk

www.WorkshopManuals.co.uk

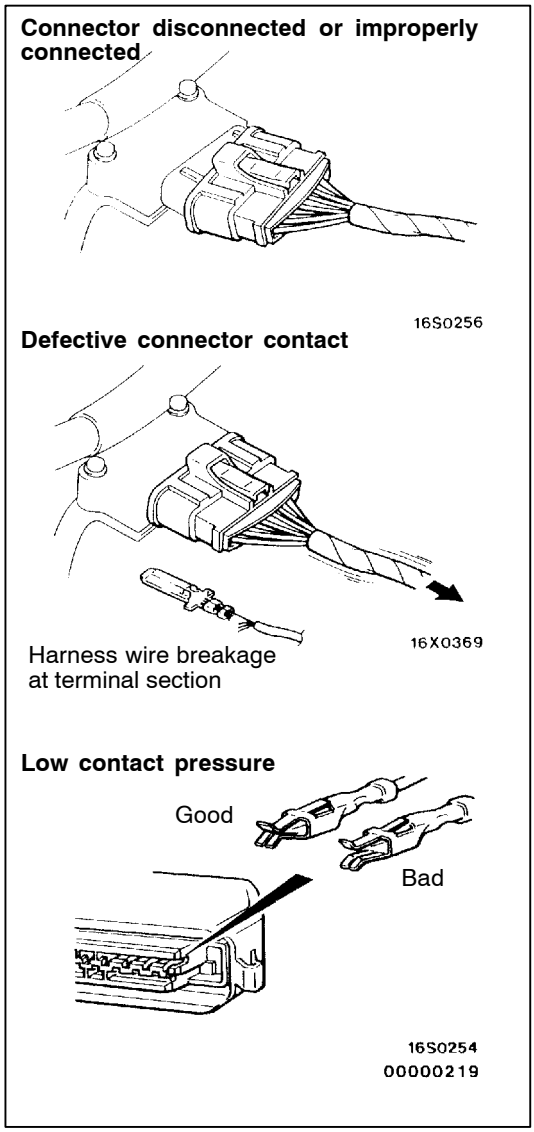


## CONNECTOR INSPECTION

### VISUAL INSPECTION

- Connector is disconnected or improperly connected
- Connector pins are pulled out
- Due to harness tension at terminal section
- Low contact pressure between male and female terminals
- Low connection pressure due to rusted terminals or foreign matter lodged in terminals

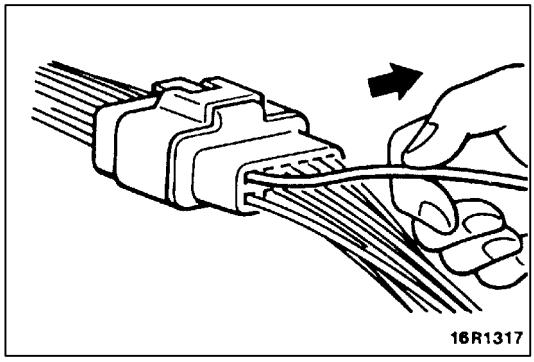


### CONNECTOR PIN INSPECTION

If the connector pin stopper is damaged, the terminal connections (male and female pins) will not be perfect even if the connector body is connected, and the pins may pull out of the reverse side of the connector. Therefore, gently pull the harnesses one by one to make sure that no pins pull out of the connector.

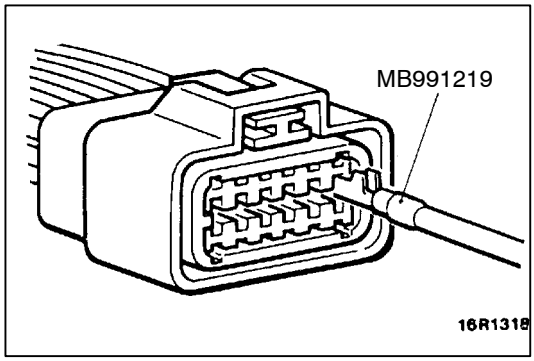


### CONNECTOR ENGAGEMENT INSPECTION

Use the special tool (connector pin connection pressure inspection harness of the inspection harness set) to inspect the engagement of the male pins and females pins. (Pin drawing force : 1 N or more)

Purchased from www.WorkshopManuals.co.uk

www.WorkshopManuals.co.uk

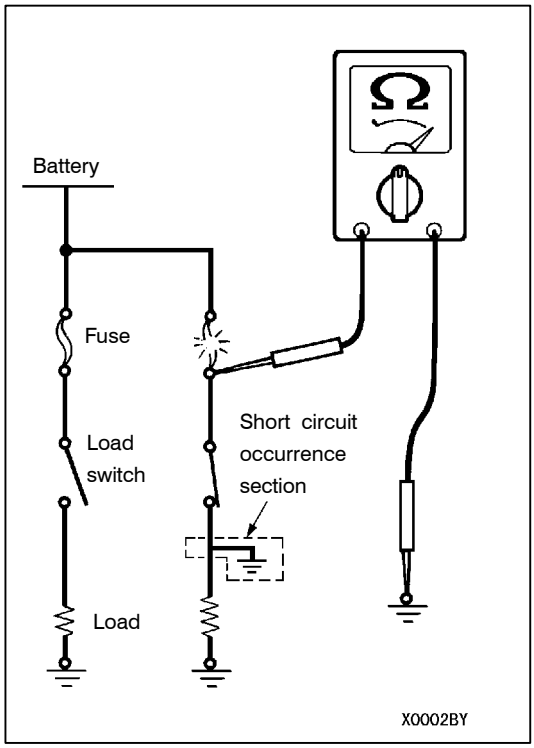


## INSPECTION SERVICE POINTS FOR A BLOWN FUSE

Remove the blown fuse and measure the resistance between the load side of the blown fuse and the earth. Set the switches of all circuits which are connected to this fuse to a condition of continuity. If the resistance is almost 0 Ω at this time, there is a short somewhere between these switches and the load. If the resistance is not 0 Ω, there is no short at the present time, but a momentary short has probably caused the fuse to blow.

The main causes of a short circuit are the following.

- Harness being clamped by the vehicle body
- Damage to the outer casing of the harness due to wear or heat
- Water getting into the connector or circuitry
- Human error (mistakenly shorting a circuit, etc.)

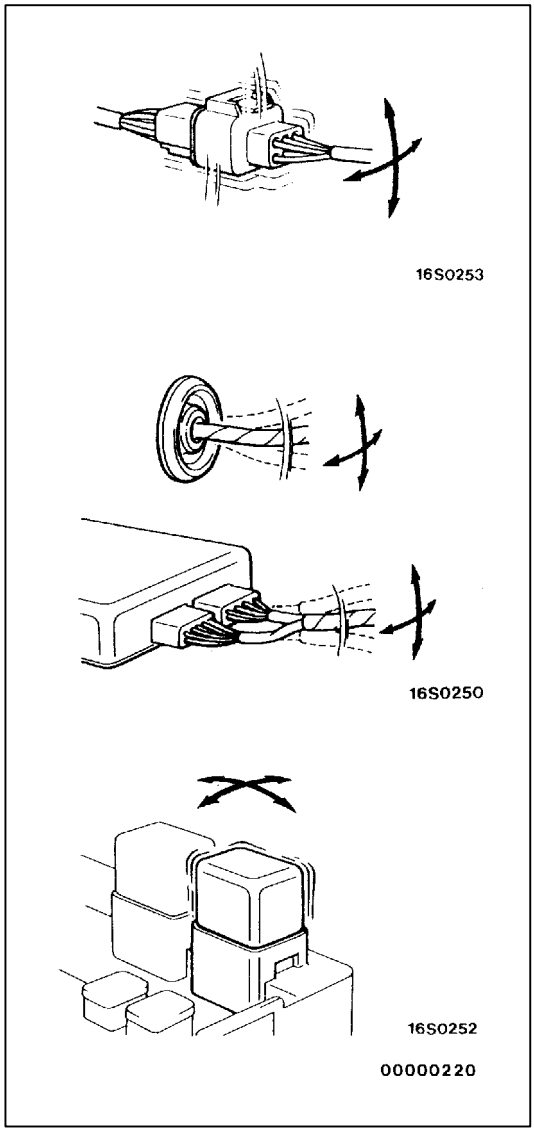


## POINTS TO NOTE FOR INTERMITTENT MALFUNCTIONS

Intermittent malfunctions often occur under certain conditions, and if these conditions can be ascertained, determining the cause becomes simple. In order to ascertain the conditions under which an intermittent malfunction occurs, first ask the customer for details about the driving conditions, weather conditions, frequency of occurrence and trouble symptoms, and then try to recreate the trouble symptoms. Next, ascertain whether the reason why the trouble symptom occurred under these conditions is due to vibration, temperature or some other factor. If vibration is thought to be the cause, carry out the following checks with the connectors and components to confirm whether the trouble symptom occurs.
The objects to be checked are connectors and components which are indicated by inspection procedures or given as probable causes (which generates diagnosis codes or trouble symptoms.)

- Gently shake the connector up, down and to the left and right.
- Gently shake the wiring harness up, down and to the left and right.
- Gently rock each sensor and relay, etc. by hand.
- Gently shake the wiring harness at suspensions and other moving parts.

NOTE
If determining the cause is difficult, the flight recorder function of the MUT-II can also be used.

Purchased from www.WorkshopManuals.co.uk

www.WorkshopManuals.co.uk

# TREATMENT BEFORE/AFTER FORDING A STREAM

## INSPECTION AND SERVICE BEFORE FORDING A STREAM

- Vehicles which are driven through water, or which may possibly be driven through water, should be subjected to the following inspections and maintenance procedures in advance.
- Inspect the dust boot and breather hose for cracks or damage, and replace them if cracks or damage are found.

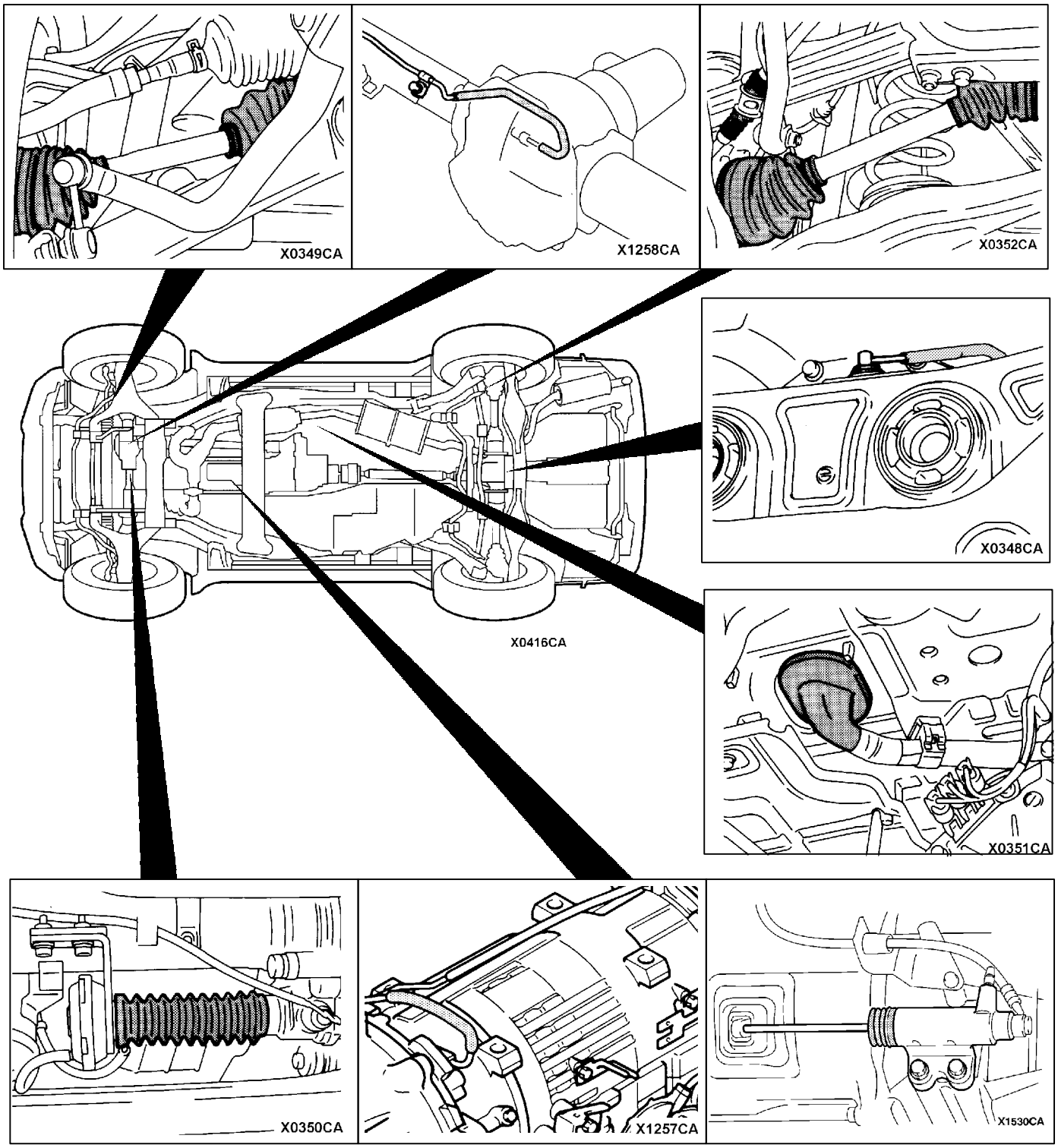


Purchased from www.WorkshopManuals.co.uk

www.WorkshopManuals.co.uk

## INSPECTION AND SERVICE AFTER FORDING A STREAM

After fording a stream, check the following points. If abnormal condition is evident, clean, replace or lubricate.

- Check for water, mud, sand, etc. in the rear brake drum, clutch housing, starter motor, brake pipe and fuel pipe.
- Check for water in the fluid or oil inside the front differential, rear differential, transmission and transfer.
- Check all boots and breather hoses for cracks and damage.

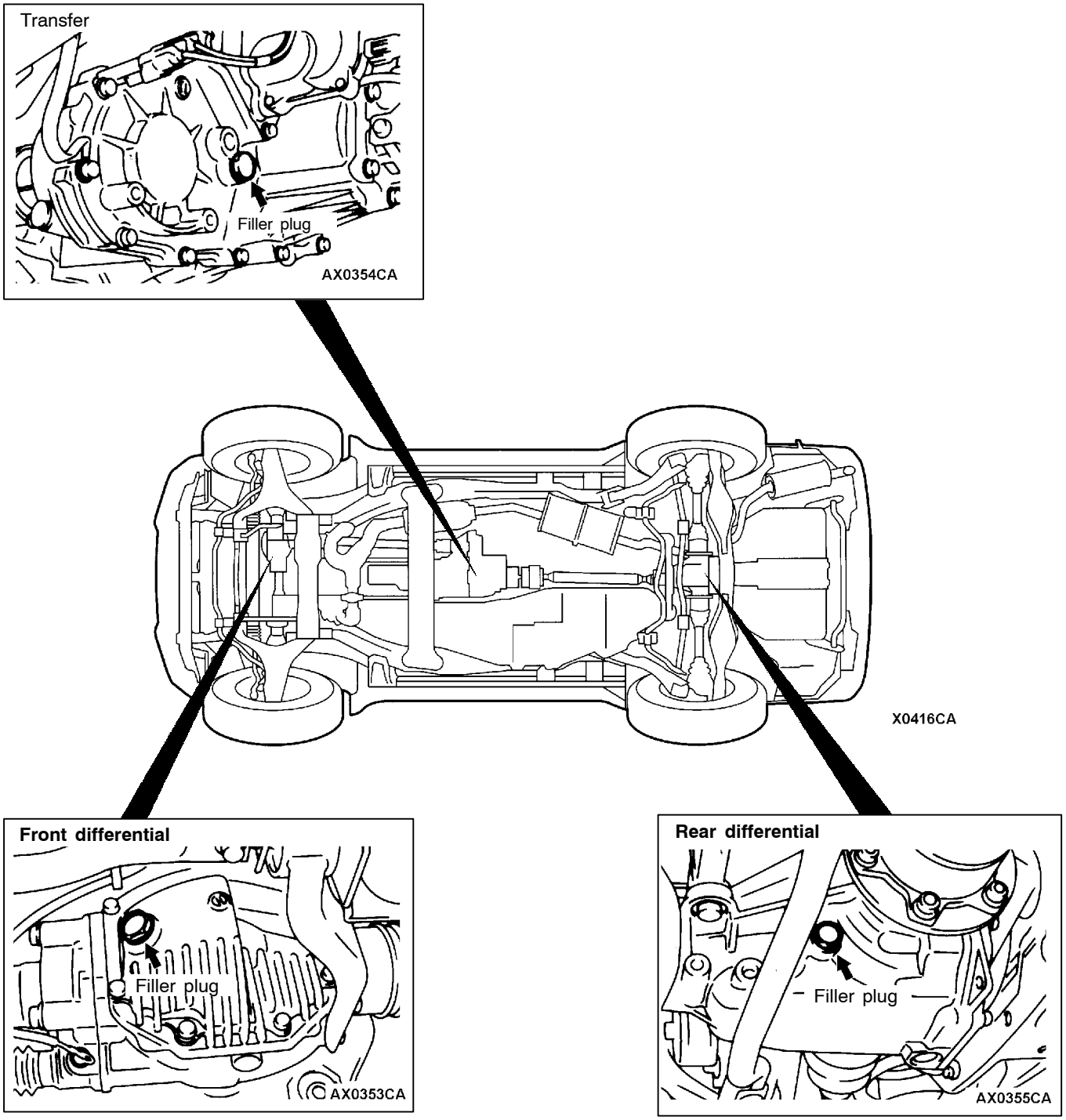


Purchased from www.WorkshopManuals.co.uk

www.WorkshopManuals.co.uk

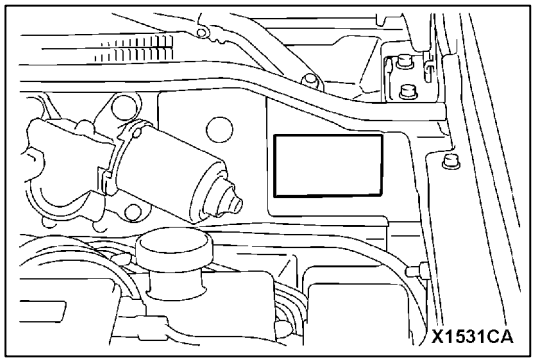


# VEHICLE IDENTIFICATION

## VEHICLE INFORMATION CODE PLATE

### LOCATION

Vehicle information code plate is riveted on the toeboard inside the engine compartment.

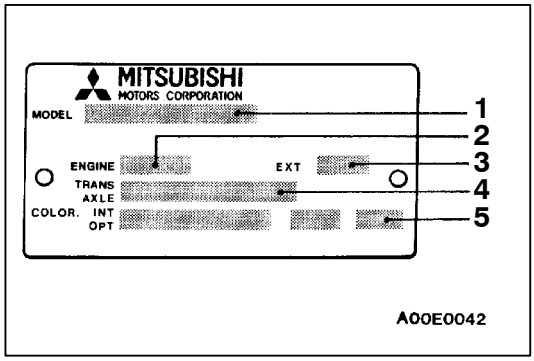


### CODE PLATE DESCRIPTION

The plate shows model code, engine model, transmission model, and body colour code.

| No. | Item | Contents | |
|---|---|---|---|
| 1 | MODEL | V65W MYHCL6 | V65W: Vehicle model |
| | | | MYHCL6: Model series |
| 2 | ENGINE | 6G74GDI | Engine model |
| 3 | EXT | S74B | Exterior code |
| 4 | TRANS AXLE | V5A51 | Transmission code |
| 5 | COLOR INT OPT | S74 15Q Z06 | S74: Body colour code |
| | | | 15Q: Interior code |
| | | | Z06: Equipment code |

For monotone colour vehicles, the body colour code shall be indicated. For two-tone or three-way two-tone colour vehicles, each colour code only shall be indicated in series.

## MODELS

### <Short wheelbase>

| Model code | | Engine model | Transmission model | Fuel supply system |
|---|---|---|---|---|
| V64W | MNDFL6 | 4D56 Intercooler Turbo (2,477 mL) | V5MT1 <5M/T> | Inyection |
| | MNHFL6 | | V5M31 <5M/T> | |
| | MNHFR6 | | | |
| | MNXFL6 | | | |
| | MNXFR6 | | | |

Purchased from www.WorkshopManuals.co.uk

www.WorkshopManuals.co.uk

| Model code | | Engine model | Transmission model | Fuel supply system |
|---|---|---|---|---|
| V68W | MNDFL6 | 4M41-DOHC Intercooler Turbo (3,200 mL) | V5M31 <5M/T> | Electronically-controlled high pressure fuel distribution |
| | MNHFL6 | | | |
| | MYHFL6 | | V5A51 <5A/T> | |
| | MNXFL6 | | V5M31 <5M/T> | |
| | MNXFR6 | | | |
| | MYXFL6 | | V5A51 <5A/T> | |
| | MYXFR6 | | | |
| V65W | MNHCL6 | 6G74GDI (3,496 mL) | V5M31 <5M/T> | GDI |
| | MNHCR6 | | | |
| | MYHCL6 | | V5A51 <5A/T> | |
| | MYHCR6 | | | |
| | MNXCL6 | | V5M31 <5M/T> | |
| | MNXCR6 | | | |
| | MYXCL6 | | V5A51 <5A/T> | |
| | MYXCR6 | | | |

## <Long wheelbase>

| Model code | | Engine model | Transmission model | Fuel supply system |
|---|---|---|---|---|
| V74W | LNDFL6 | 4D56 Intercooler Turbo (2,477 mL) | V5MT1 <5M/T> | Inyection |
| | LNHFL6 | | V5M31 <5M/T> | |
| | LNXFL6 | | | |
| V78W | LNDFL6 | 4M41-DOHC Intercooler Turbo (3,200 mL) | V5M31 <5M/T> | Electronically-controlled high pressure fuel distribution |
| | LNHFL6 | | | |
| | LNHFR6 | | | |
| | LYHFL6 | | V5A51 <5A/T> | |
| | LYHFR6 | | | |
| | LNXFL6 | | V5M31 <5M/T> | |
| | LNXFR6 | | | |
| | LYXFL6 | | V5A51 <5A/T> | |
| | LYXFR6 | | | |

Purchased from www.WorkshopManuals.co.uk

www.WorkshopManuals.co.uk

| Model code | | Engine model | Transmission model | Fuel supply system |
|---|---|---|---|---|
| V75W | LNHCL6 | 6G74GDI (3,496 mL) | V5M31 <5M/T> | GDI |
| | LNHCR6 | | | |
| | LYHCL6 | | V5A51 <5A/T> | |
| | LYHCR6 | | | |
| | LNXCL6 | | V5M31 <5M/T> | |
| | LNXCR6 | | | |
| | LYXCL6 | | V5A51 <5A/T> | |
| | LYXCR6 | | | |

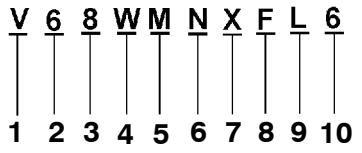

X1271CA

## MODEL CODE

| No. | Items | Contents |
|---|---|---|
| 1 | Development | V: MITSUBISHI PAJERO |
| 2 | wheelbase | 6: Short wheelbase<br>7: Long wheelbase |
| 3 | Engine type | 4: 2,477 mL diesel engine<br>5: 3,496 mL petrol engine<br>8: 3,200 mL diesel engine |
| 4 | Sort | W: Wagon |
| 5 | Body style | M: 3-door<br>L: 5-door |
| 6 | Transmission type | N: 5-speed manual transmission<br>Y: 5-speed automatic transmission |
| 7 | Trim level | D: GL<br>H: GLX<br>X: GLS |
| 8 | Specification engine feature | C: GDI<br>F: Intercooler Turbocharger |
| 9 | Steering wheel location | L: Left hand<br>R: Right hand |
| 10 | Destination | 6: For Europe |

Purchased from www.WorkshopManuals.co.uk

www.WorkshopManuals.co.uk

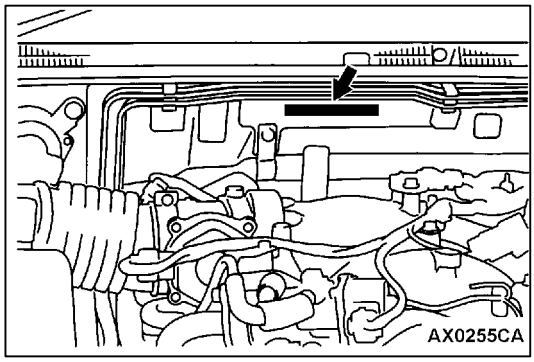


## CHASSIS NUMBER

The chassis number is stamped on the toeboard inside the engine compartment.

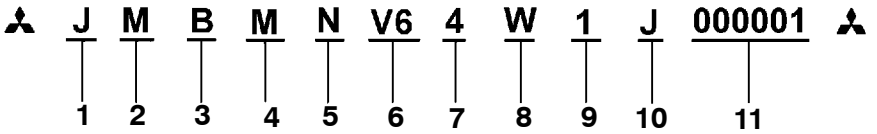


X1428CA

| No. | Items | | Contents |
|---|---|---|---|
| 1 | Fixed figure | J | Asia |
| 2 | Distribution channel | M | Japan channel |
| 3 | Destination | A | For Europe, right hand drive |
| | | B | For Europe, left hand drive |
| 4 | Body style | M | 3-door |
| | | L | 5-door |
| 5 | Transmission type | N | 5-speed manual transmission |
| | | Y | 5-speed automatic transmission |
| 6 | Development order | V6 | MITSUBISHI PAJERO short wheelbase |
| | | V7 | MITSUBISHI PAJERO long wheelbase |
| 7 | Engine | 4 | 4D56: 2,477 mL diesel engine |
| | | 5 | 6G74: 3,496 mL petrol engine |
| | | 8 | 4M41: 3,200 mL diesel engine |
| 8 | Sort | W | Station wagon |
| 9 | Model year | 1 | 2001 |
| 10 | Plant | J | Nagoya-3 |
| 11 | Serial number | - | - |

Purchased from www.WorkshopManuals.co.uk

www.WorkshopManuals.co.uk

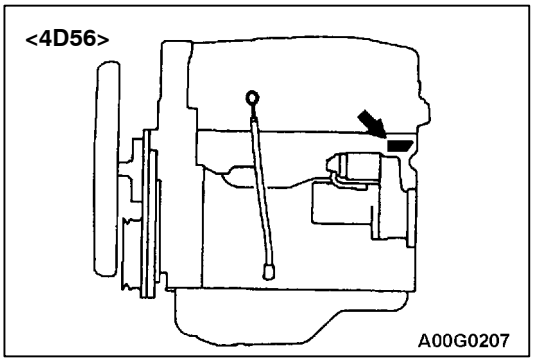


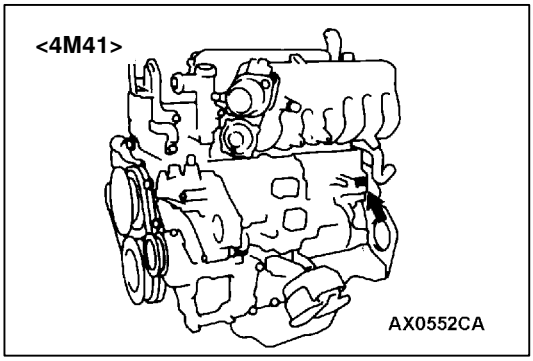


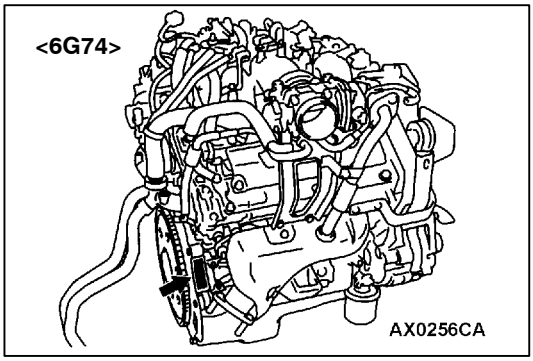


## ENGINE MODEL NUMBER

1. The engine model number is stamped at the cylinder block as shown in the following.

| Engine model | Engine displacement mL |
|---|---|
| 4D56 | 2,477 |
| 4M41 | 3,200 |
| 6G74 | 3,496 |

2. The engine serial number is stamped near the engine model number.

| | |
|---|---|
| Engine serial number | AA0201 to YY9999 |

Purchased from www.WorkshopManuals.co.uk

www.WorkshopManuals.co.uk

**THEFT PROTECTION LABEL**

FOR MAIN OUTER PANELS

[FOR ORIGINAL PARTS]

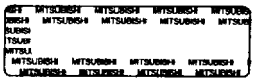

[FOR REPLACEMENT PARTS]

X1629CA

## THEFT PROTECTION<R.H.D.>

In order to protect against theft, a Vehicle Identification Number (VIN) is attached as a plate or label to the following major parts of the main outer panels:

Fender, Doors, Back door, Quarter panel, Hood, Bumpers

In addition, a theft-protection label is attached to replacement parts for the body outer panel main components.

**Cautions regarding panel repairs:**

1. **When repainting original parts, do so after first masking the theft-protection label, and, after painting, be sure to peel off the masking tape.**
2. **The theft-protection label for replacement parts is covered by masking tape, so such parts can be painted as is. The masking tape should be removed after painting is finished.**
3. **The theft-protection label should not be removed from original parts or replacement parts.**

## LOCATIONS

**TARGET AREA (A: FOR ORIGINAL EQUIPMENT PARTS, B: FOR REPLACEMENT PARTS)**

Fender

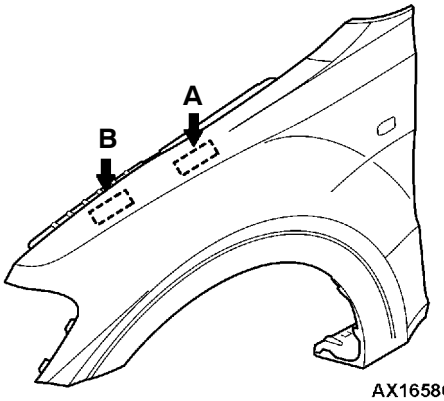


AX1658CA

The illustration indicates left outer side. Right side is symmetrically opposite.

Quarter panel

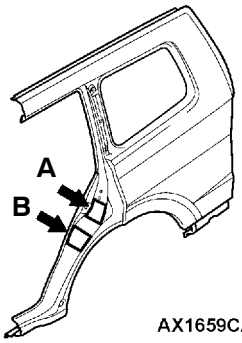


AX1659CA

The illustration indicates left outer side. Right side is symmetrically opposite.

Front door

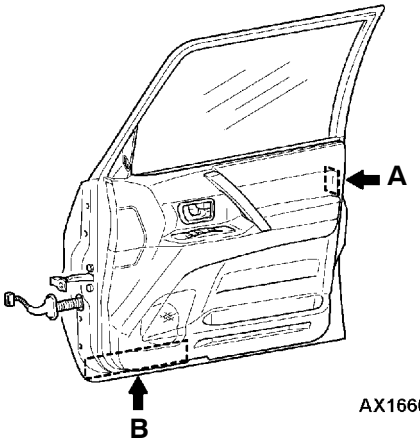


AX1660CA

The illustration indicates right outer side.
Left side is symmetrically opposite.

Rear door

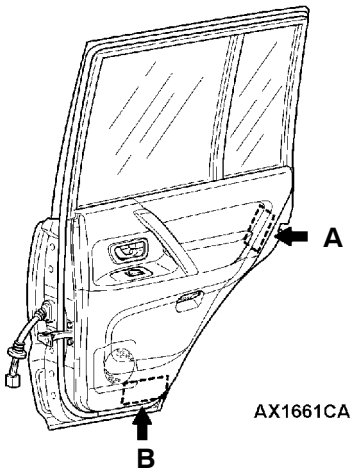


AX1661CA

The illustration indicates right outer side.
Left side is symmetrically opposite.

Purchased from www.WorkshopManuals.co.uk

www.WorkshopManuals.co.uk

| TARGET AREA (A: FOR ORIGINAL EQUIPMENT PARTS, B: FOR REPLACEMENT PARTS) | |
|---|---|
| Hood<br> 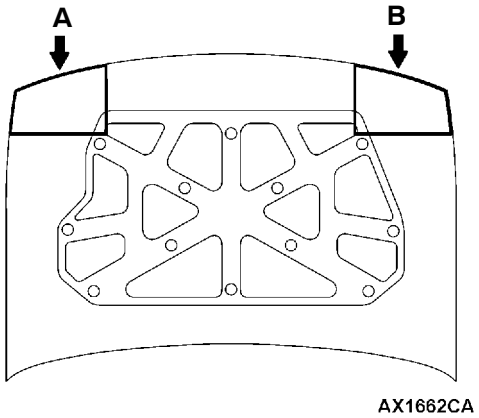 <br> | Back door<br> 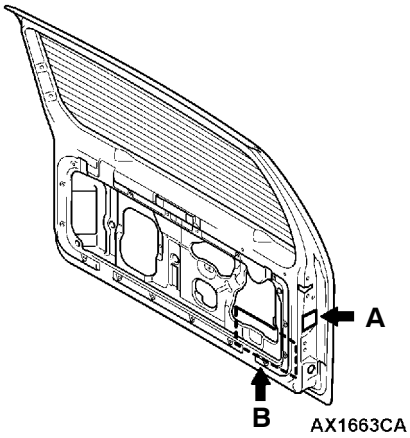 <br> |
| Front bumper<br> 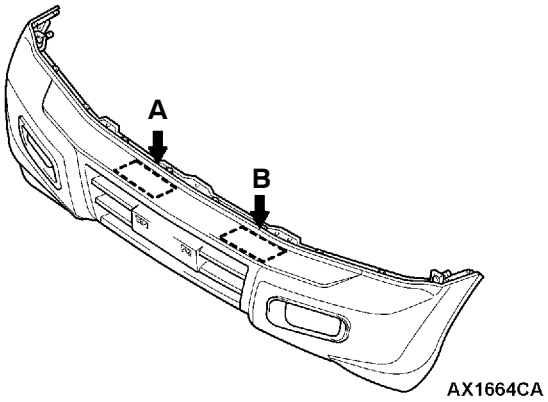 <br> | Rear bumper<br> 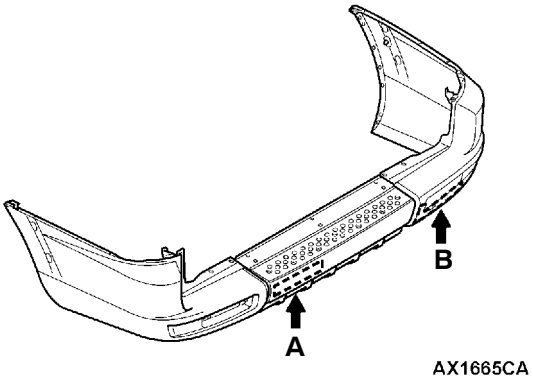 <br> |

Purchased from www.WorkshopManuals.co.uk

www.WorkshopManuals.co.uk

# MAJOR SPECIFICATIONS

## <Short wheelbase>

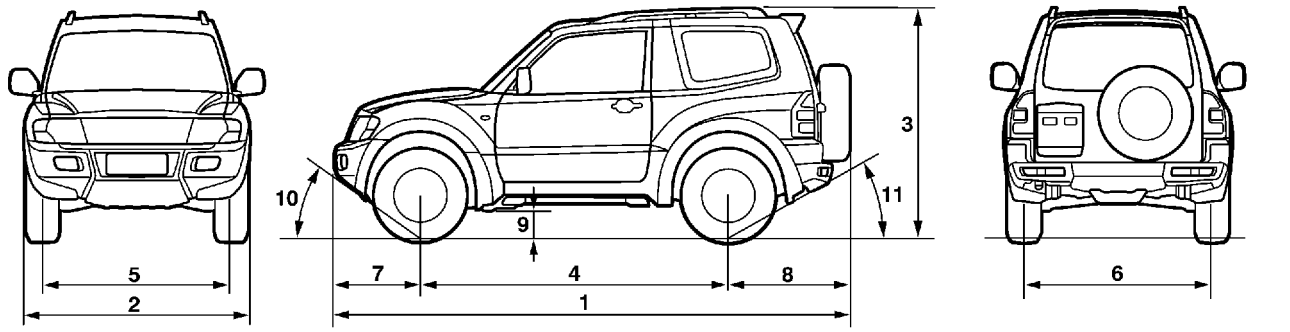


X1508CA

| Items | | | V64W | | | V68W | |
|---|---|---|---|---|---|---|---|
| | | | MNDFL6 | MNHFL6, MNHFR6 | MNXFL6, MNXFR6 | MNDFL6 | MNHFL6 |
| Vehicle dimensions mm | Overall length | 1 | 4,260 | | 4,280 | 4,260 | |
| | Overall width | 2 | 1,845 | | 1,875 | 1,845 | |
| | Overall height (unladen) | 3 | 1,845,1,875*1 | | | | |
| | Wheelbase | 4 | 2,545 | | | | |
| | Track-front | 5 | 1,560 | | | | |
| | Track-rear | 6 | 1,560 | | | | |
| | Overhang-front | 7 | 710 | | | | |
| | Overhang-rear | 8 | 1,005*2, 1,025*3 | | | | |
| | Ground clearance (unladen) | 9 | 235 | | | 225 | |
| | Angle of approach degrees | 10 | 42* | | | | |
| | Angle of departure degrees | 11 | 33.5* | | | | |
| Vehicle weight kg | Kerb weight | | 1,865 | 1,900 | 1,920 | 1,975 | 1,980 |
| | Max. gross vehicle weight | | 2,510 | | | | |
| | Max. axle weight rating-front | | 1,070 | 1,090 | 1,100 | 1,165 | |
| | Max. axle weight rating-rear | | 1,440 | 1,420 | 1,410 | 1,345 | |
| Seating capacity | | | 5 | | | | |
| Engine | Model No. | | 4D56 Intercooler Turbo | | | 4M41-DOHC Intercooler Turbo | |
| | Total displacement mL | | 2,477 | | | 3,200 | |
| Transmis-sion | Model No. | | V5MT1 | V5M31 | | | |
| | Type | | 5-speed manual | | | | |
| Fuel system | Fuel supply system | | Inyection | | | Electronically-controlled high pressure fuel distribution | |

NOTE:
*1: Vehicles with roof rails
*2: Vehicles with 235/80R16 Tyre
*3: Vehicles with 265/70R16 Tyre

Purchased from www.WorkshopManuals.co.uk

www.WorkshopManuals.co.uk

| Items | | | V68W | | | V65W | |
|---|---|---|---|---|---|---|---|
| | | | MYHFL6 | MNXFL6, MNXFR6 | MYXFL6, MYXFR6 | MNHCL6, MNHCR6 | MYHCL6, MYHCR6 |
| Vehicle dimensions mm | Overall length | 1 | 4,260 | 4,280 | | | |
| | Overall width | 2 | 1,845 | 1,875 | | 1,845 | |
| | Overall height (unladen) | 3 | 1,845,1,875*1 | | | | |
| | Wheelbase | 4 | 2,545 | | | | |
| | Track-front | 5 | 1,560 | | | | |
| | Track-rear | 6 | 1,560 | | | | |
| | Overhang-front | 7 | 710 | | | | |
| | Overhang-rear | 8 | 1,005*2, 1,025*3 | | | | |
| | Ground clearance (unladen) | 9 | 225 | | | 235 | |
| | Angle of approach degrees | 10 | 42* | | | | |
| | Angle of departure degrees | 11 | 33.5* | | | | |
| Vehicle weight kg | Kerb weight | | 1,980 | 2,000 | | 1,915 | |
| | Max. gross vehicle weight | | 2,510 | | | | |
| | Max. axle weight rating-front | | 1,165 | 1,170 | | 1.075 | |
| | Max. axle weight rating-rear | | 1,345 | 1,340 | | 1,435 | |
| Seating capacity | | | 5 | | | | |
| Engine | Model No. | | 4M41-DOHC Intercooler Turbo | | | 6G74GDI | |
| | Total displacement mL | | 3,200 | | | 3,496 | |
| Transmis-sion | Model No. | | V5A51 | V5M31 | V5A51 | V5M31 | V5A51 |
| | Type | | 5-speed automatic | 5-speed manual | 5-speed automa-tic | 5-speed manual | 5-speed automatic |
| Fuel system | Fuel supply system | | Electronically-controlled high pressure fuel distribution | | | GDI | |

NOTE:
*1: Vehicles with roof rails
*2: Vehicles with 235/80R16 Tyre
*3: Vehicles with 265/70R16 Tyre

Purchased from www.WorkshopManuals.co.uk

www.WorkshopManuals.co.uk

| Items | | | V65W | |
|---|---|---|---|---|
| | | | MNXCL6, MNXCR6 | MYXCL6, MYXCR6 |
| Vehicle dimensions mm | Overall length | 1 | 4,280 | |
| | Overall width | 2 | 1,875 | |
| | Overall height (unladen) | 3 | 1,845,1,875*1 | |
| | Wheelbase | 4 | 2,545 | |
| | Track-front | 5 | 1,560 | |
| | Track-rear | 6 | 1,560 | |
| | Overhang-front | 7 | 710 | |
| | Overhang-rear | 8 | 1,005*2, 1,025*3 | |
| | Ground clearance (unladen) | 9 | 235 | |
| | Angle of approach degrees | 10 | 42* | |
| | Angle of departure degrees | 11 | 33.5* | |
| Vehicle weight kg | Kerb weight | | 1,935 | |
| | Max. gross vehicle weight | | 2,510 | |
| | Max. axle weight rating-front | | 1,080 | |
| | Max. axle weight rating-rear | | 1,430 | |
| Seating capacity | | | 5 | |
| Engine | Model No. | | 6G74GDI | |
| | Total displacement mL | | 3,496 | |
| Transmis-sion | Model No. | | V5M31 | V5A51 |
| | Type | | 5-speed manual | 5-speed automatic |
| Fuel system | Fuel supply system | | GDI | |

NOTE:
*1: Vehicles with roof rails
*2: Vehicles with 235/80R16 Tyre
*3: Vehicles with 265/70R16 Tyre

Purchased from www.WorkshopManuals.co.uk

www.WorkshopManuals.co.uk

## <Long wheelbase>

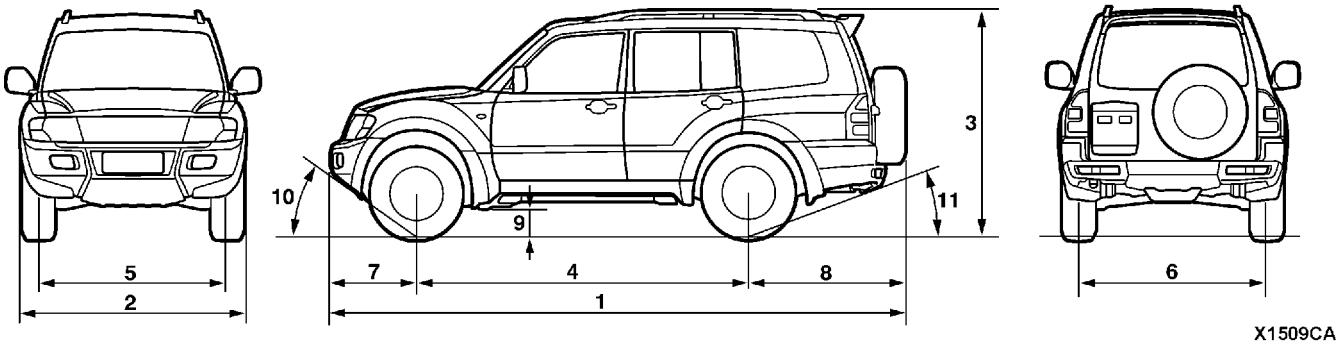


| Items | | | V74W | | | V78WL | |
|---|---|---|---|---|---|---|---|
| | | | LNDFL6 | LNHFL6 | LNXFL6 | LNDFL6 | LNHFL6, LNHFR6 |
| Vehicle dimensions mm | Overall length | 1 | 4,775 | | 4,795 | 4,775 | |
| | Overall width | 2 | 1,845 | | 1,875 | 1,845 | |
| | Overall height (unladen) | 3 | 1,855,1,885*1 | | | | |
| | Wheelbase | 4 | 2,780 | | | | |
| | Track-front | 5 | 1,560 | | | | |
| | Track-rear | 6 | 1,560 | | | | |
| | Overhang-front | 7 | 710 | | | | |
| | Overhang-rear | 8 | 1,285*2, 1,305*3 | | | | |
| | Ground clearance (unladen) | 9 | 235 | | | 225 | |
| | Angle of approach degrees | 10 | 42* | | | | |
| | Angle of departure degrees | 11 | 24* | | | | |
| Vehicle weight kg | Kerb weight | | 2,015 | 2,055 | 2,090 | 2,120 | 2,125 |
| | Max. gross vehicle weight | | 2,760 | | | | |
| | Max. axle weight rating-front | | 1,110 | 1,110 | 1,125 | 1,160 | |
| | Max. axle weight rating-rear | | 1,650 | 1,650 | 1,635 | 1,600 | |
| Seating capacity | | | 7 | | | | |
| Engine | Model No. | | 4D56 Intercooler Turbo | | | 4M41-DOHC Intercooler Turbo | |
| | Total displacement mL | | 2,477 | | | 3,200 | |
| Transmis-sion | Model No. | | V5MT1 | V5M31 | | | |
| | Type | | 5-speed manual | | | | |
| Fuel system | Fuel supply system | | Inyection | | | Electronically-controlled high pressure fuel distribution | |

NOTE:
*1: Vehicles with roof rails
*2: Vehicles with 235/80R16 Tyre
*3: Vehicles with 265/70R16 Tyre

Purchased from www.WorkshopManuals.co.uk

www.WorkshopManuals.co.uk

| Items | | | V78W | | | V75W | |
|---|---|---|---|---|---|---|---|
| | | | LYHFL6, LYHFR6 | LNXFL6, LNXFR6 | LYXFL6, LYXFR6 | LNHCL6, LNHCR6 | LYHCL6, LYHCR6 |
| Vehicle dimensions mm | Overall length | 1 | 4,775 | 4,795 | | | |
| | Overall width | 2 | 1,845 | 1,875 | | 1,845 | |
| | Overall height (unladen) | 3 | 1,855,1,885*1 | | | | |
| | Wheelbase | 4 | 2,780 | | | | |
| | Track-front | 5 | 1,560 | | | | |
| | Track-rear | 6 | 1,560 | | | | |
| | Overhang-front | 7 | 710 | | | | |
| | Overhang-rear | 8 | 1,285*2, 1,305*3 | | | | |
| | Ground clearance (unladen) | 9 | 225 | | | 235 | |
| | Angle of approach degrees | 10 | 42* | | | | |
| | Angle of departure degrees | 11 | 24* | | | | |
| Vehicle weight kg | Kerb weight | | 2,125 | 2,155 | | 2,060 | |
| | Max. gross vehicle weight | | 2,760 | | 2,800 | 2,760 | |
| | Max. axle weight rating-front | | 1,160 | | | 1,110 | |
| | Max. axle weight rating-rear | | 1,600 | | | 1,650 | |
| Seating capacity | | | 7 | | | | |
| Engine | Model No. | | 4M41-DOHC Intercooler Turbo | | | 6G74GDI | |
| | Total displacement mL | | 3,200 | | | 3,496 | |
| Transmis-sion | Model No. | | V5A51 | V5M31 | V5A51 | V5M31 | V5A51 |
| | Type | | 5-speed automatic | 5-speed manual | 5-speed auto-matic | 5-speed manual | 5-speed automatic |
| Fuel system | Fuel supply system | | Electronically-controlled high pressure fuel distribution | | | GDI | |

NOTE:
*1: Vehicles with roof rails
*2: Vehicles with 235/80R16 Tyre
*3: Vehicles with 265/70R16 Tyre

Purchased from www.WorkshopManuals.co.uk

www.WorkshopManuals.co.uk

| Items | | | V75W | |
|---|---|---|---|---|
| | | | LNXCL6, LNXCR6 | LYXCL6, LYXCR6 |
| Vehicle dimensions mm | Overall length | 1 | 4,795 | |
| | Overall width | 2 | 1,875 | |
| | Overall height (unladen) | 3 | 1,855,1,885*1 | |
| | Wheelbase | 4 | 2,780 | |
| | Track-front | 5 | 1,560 | |
| | Track-rear | 6 | 1,560 | |
| | Overhang-front | 7 | 710 | |
| | Overhang-rear | 8 | 1,285*2, 1,305*3 | |
| | Ground clearance (unladen) | 9 | 235 | |
| | Angle of approach degree | 10 | 42* | |
| | Angle of departure degree) | 11 | 24* | |
| Vehicle weight kg | Kerb weight | | 2,095 | |
| | Max. gross vehicle weight | | 2,760 | |
| | Max. axle weight rating-front | | 1,110 | |
| | Max. axle weight rating-rear | | 1,650 | |
| Seating capacity | | | 7 | |
| Engine | Model No. | | 6G74GDI | |
| | Total displacement mL | | 3,496 | |
| Transmis-sion | Model No. | | V5M31 | V5A51 |
| | Type | | 5-speed manual | 5-speed automatic |
| Fuel system | Fuel supply system | | GDI | |

NOTE:
*1: Vehicles with roof rails
*2: Vehicles with 235/80R16 Tyre
*3: Vehicles with 265/70R16 Tyre

Purchased from www.WorkshopManuals.co.uk

www.WorkshopManuals.co.uk

# PRECAUTIONS BEFORE SERVICE

## SUPPLEMENTAL RESTRAINT SYSTEM (SRS)

1. Items to follow when servicing SRS
   (1) Be sure to read GROUP 52B - Supplemental Restraint System (SRS).
   For safe operations, please follow the directions and heed all warnings.
   (2) Wait at least 60 seconds after disconnecting the battery cable before doing any further work. The SRS system is designed to retain enough voltage to deploy the air bag even after the battery has been disconnected. Serious injury may result from unintended air bag deployment if work is done on the SRS system immediately after the battery cable is disconnected.
   (3) Warning labels must be heeded when servicing or handling SRS components. Warning labels are located in the following locations.
   - Hood
   - Sun visor
   - Glove box
   - SRS-ECU
   - Steering wheel
   - Steering gearbox
   - Air bag module (driver's side and front passenger's side)
   - Front impact sensor
   - Clock spring
   - Side air bag module
   - Side impact sensor

   (4) Always use the designated special tools and test equipment.
   (5) Store components removed from the SRS in a clean and dry place.
   The air bag module should be stored on a flat surface and placed so that the pad surface is facing upward.
   Do not place anything on top of it.
   (6) Never attempt to disassemble or repair the SRS components (SRS-ECU, air bag module, clock spring).
   (7) Whenever you finish servicing the SRS, check the SRS warning lamp operation to make sure that the system functions properly.
   (8) Be sure to deploy the air bag before disposing of the air bag module or disposing of a vehicle equipped with an air bag. (Refer to GROUP 52B - Air Bag Module Disposal Procedures.)
2. Observe the following when carrying out operations on places where SRS components are installed, including operations not directly related to the SRS air bag.
   (1) When removing or installing parts do not allow any impact or shock to the SRS components.
   (2) SRS components should not be subjected to heat, so remove the SRS components before drying or baking the vehicle after painting.
   - SRS-ECU, air bag module, clock spring, front and side impact sensors: 93°C or more

   After re-installing them, check the SRS warning lamp operation to make sure that the system functions properly.

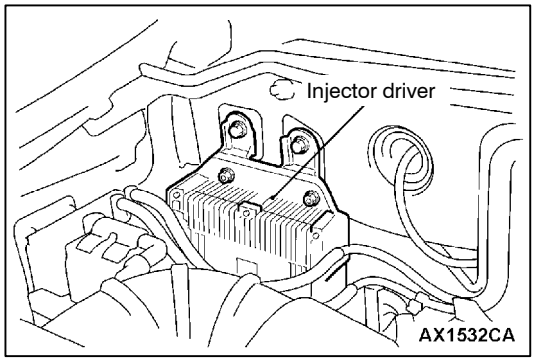


## SERVICING INJECTOR DRIVER

After driving the vehicle, the injector driver will be hot. In addition, high voltages and high currents are supplied to the injector driver and the injectors while the engine is running, so take sufficient care when handling the injector driver and surrounding components at such times.

Purchased from www.WorkshopManuals.co.uk

www.WorkshopManuals.co.uk

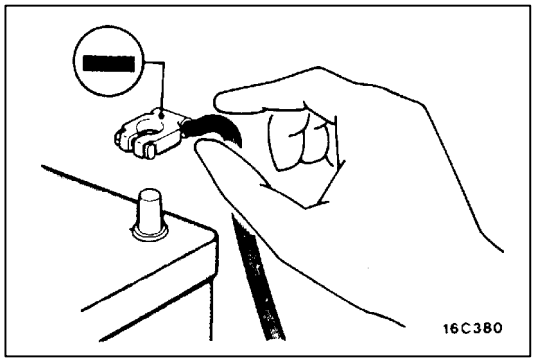


## SERVICING THE ELECTRICAL SYSTEM

Before replacing a component related to the electrical system and before undertaking any repair procedures involving the electrical system, be sure to first disconnect the negative (-) cable from the battery in order to avoid damage caused by short-circuiting.

**Caution**
**Before connecting or disconnecting the negative (-) cable, be sure to turn off the ignition switch and the lighting switch.**
**(If this is not done, there is the possibility of semiconductor parts being damaged.)**

## APPLICATION OF ANTI-CORROSION AGENTS AND UNDERCOATS

If oil or grease gets onto the oxygen sensor, it will cause a drop in the performance of the sensor.
Cover the oxygen sensor with a protective cover when applying anti-corrosion agents and undercoats.

## PRE-INSPECTION CONDITION

"Pre-inspection condition" refers to the condition that the vehicle must be in before proper engine inspection can be carried out. If you see the words "Set the vehicle to the pre-inspection condition". in this manual, it means to set the vehicle to the following condition.

- Engine coolant temperature: 80 - 90°C
- Lamps, electric cooling fan and all accessories: OFF
- M/T: Neutral
- A/T: P range

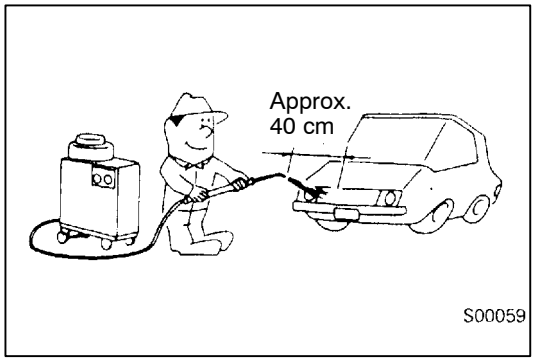


## VEHICLE WASHING

If high-pressure car-washing equipment or steam car-washing equipment is used to wash the vehicle, be sure to note the following information in order to avoid damage to plastic components, etc.

- Spray nozzle distance: Approx. 40 cm or more
- Spray pressure: 3,900 kPa or less
- Spray temperature: 82°C or less
- Time of concentrated spray to one point: within 30 sec.

Purchased from www.WorkshopManuals.co.uk

www.WorkshopManuals.co.uk

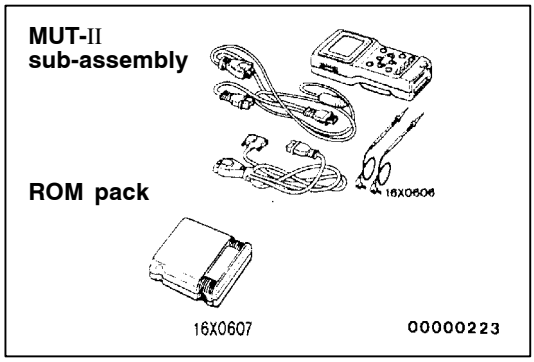


## MUT-II

Refer to the "MUT-II REFERENCE MANUAL" or "MUT-II OPERATING INSTRUCTIONS" for instructions on handling the MUT-II.

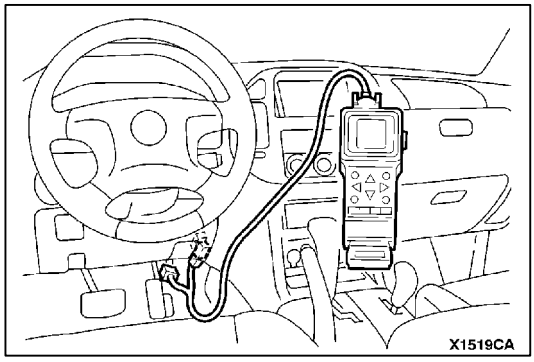


Connect the MUT-II to the diagnosis connector as shown in the illustration.

**Caution**
**Connection and disconnection of the MUT-II should always be made with the ignition switch in the "LOCK(OFF)" position.**

## IN ORDER TO PREVENT VEHICLES FROM FIRE

"Improper installation of electrical or fuel related parts could cause a fire. In order to retain the high quality and safety of the vehicle, it is important that any accessories that may be fitted or modifications/repairs that may be carried out which involve the electrical or fuel systems, MUST be carried out in accordance with MMC's information/Instructions".

## ENGINE OILS

### Health Warning

Prolonged and repeated contact with mineral oil will result in the removal of natural fats from the skin, leading to dryness, irritation and dermatitis. In addition, used engine oil contains potentially harmful contaminants which may cause skin cancer. Adequate means of skin protection and washing facilities must be provided.

### Recommended Precautions

The most effective precaution is to adapt working practices which prevent, as far as practicable, the risk of skin contact with mineral oils, for example by using enclosed systems for handling used engine oil and by degreasing components, where practicable, before handling them.

Purchased from www.WorkshopManuals.co.uk

www.WorkshopManuals.co.uk

Other precautions:

- Avoid prolonged and repeated contact with oils, particularly used engine oils.
- Wear protective clothing, including impervious gloves where practicable.
- Avoid contaminating clothes, particularly underpants, with oil.
- Do not put oily rags in pockets, the use of overalls without pockets will avoid this.
- Do not wear heavily soiled clothing and oil-impregnated foot-wear. Overalls must be cleaned regularly and kept separately from personal clothing.
- Where there is a risk of eye contact, eye protection should be worn, for example, chemical goggles or face shields; in addition an eye wash facility should be provided.
- Obtain First Aid treatment immediately for open cuts and wounds.
- Wash regularly with soap and water to ensure all oil is removed, especially before meals (skin cleansers and nail brushes will help). After cleaning, the application of preparations containing lanolin to replace the natural skin oils is advised.
- Do not use petrol, kerosine, diesel fuel, gas oil, thinners or solvents for cleaning skin.
- Use barrier creams, applying them before each work period, to help the removal of oil from the skin after work.
- If skin disorders develop, obtain medical advice without delay.

Purchased from www.WorkshopManuals.co.uk

www.WorkshopManuals.co.uk

# SUPPLEMENTAL RESTRAINT SYSTEM (SRS)

To improve safety, the SRS is available as optional parts. This system enhances collision safety by restraining the front occupants in case of an accident.

The SRS consists of four air bag modules, SRS air bag control unit (SRS-ECU), front and side impact sensors, SRS warning lamp and clock spring. The air bags are located in the centre of the steering wheel, above the glove box, and built into the front seat back assemblies. Each air bag has a folded air bag and an inflator unit. The SRS-ECU under the floor console monitors the system and has a safing G-sensor and an analog G-sensor. The front impact sensors are installed in the headlamp support. The side impact sensors are installed inside the center pillars or the quarter panels, inner monitor any shocks coming from the side of the vehicle. The warning lamp on the instrument panel indicates the operational status of the SRS. The clock spring is installed in the steering column.

The SRS side air bags deploy if an impact received at the front or side of the vehicle is stronger than a certain set value, in order to protect the front seat occupant's torso in the event of a collision. Only authorized service personnel should do work on or around the SRS components. Those service personnel should read this manual carefully before starting any such work. Extreme care must be used when servicing the SRS to avoid injury to the service personnel (by inadvertent deployment of the air bags) or the driver (by rendering the SRS inoperative).

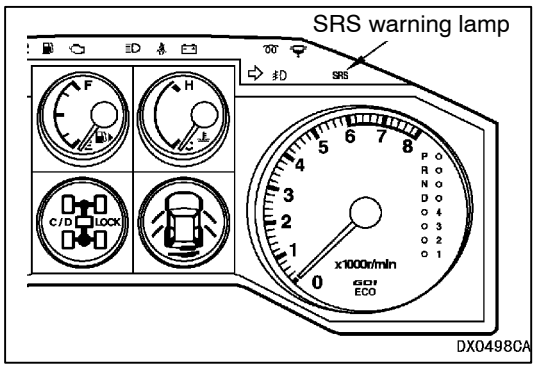


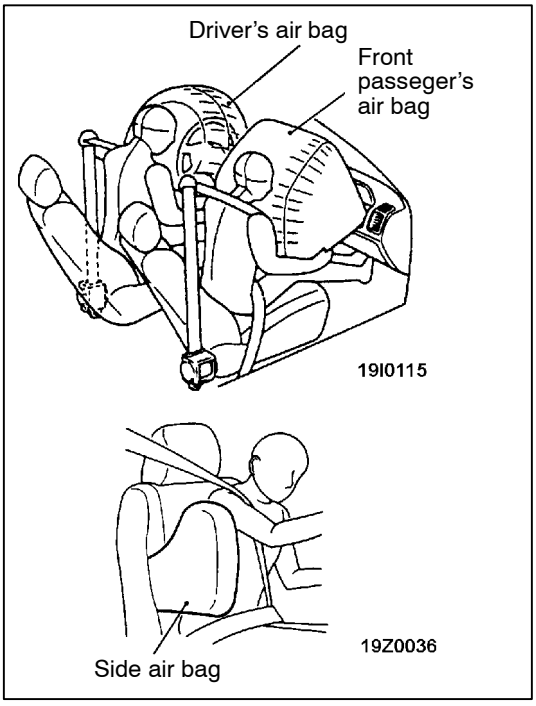


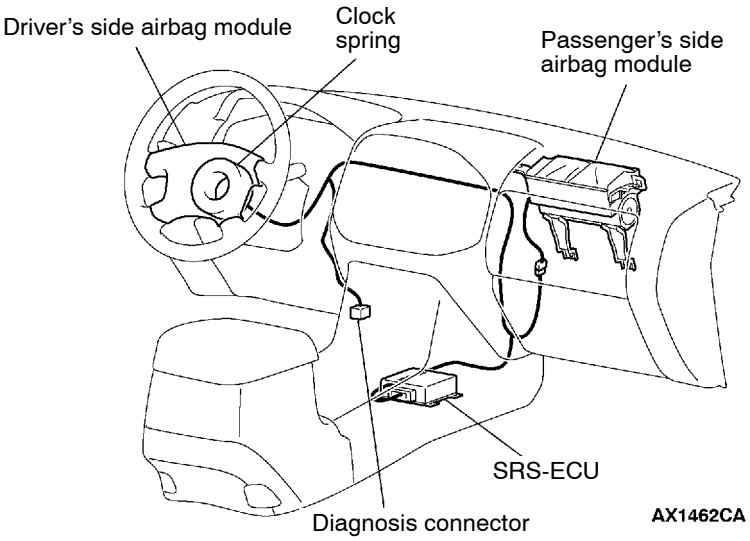


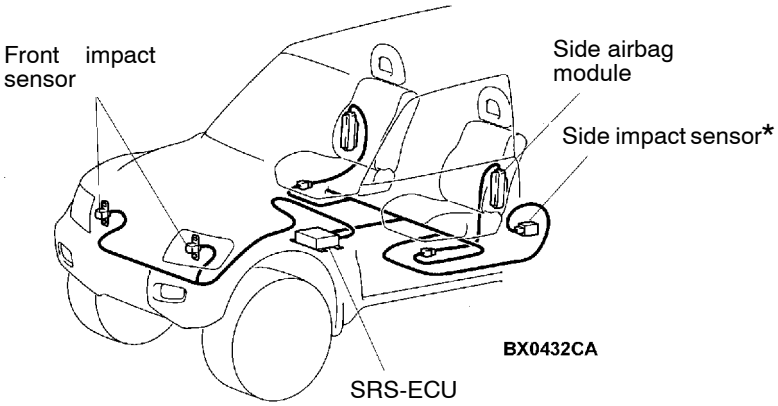


NOTE
*: Indicates the parts equipped on the right and left sides.

Purchased from www.WorkshopManuals.co.uk

www.WorkshopManuals.co.uk

# SRS SERVICE PRECAUTIONS

1. In order to avoid injury to yourself or others from accidental deployment of the air bag during servicing, read and carefully follow all the precautions and procedures described in this manual.
2. Do not use any electrical test equipment on or near SRS components, except those specified on GROUP 52B.
3. **Never Attempt to Repair the Following Components:**
   - SRS air bag control unit (SRS-ECU)
   - Clock spring
   - Driver's and front passenger's air bag modules
   - Side air bag modules
   - Front impact sensors
   - Side impact sensors

NOTE
If any of these components are diagnosed as faulty, they should only be replaced, in accordance with the INDIVIDUAL COMPONENTS SERVICE procedures in this manual. (Refer to GROUP 52B.)

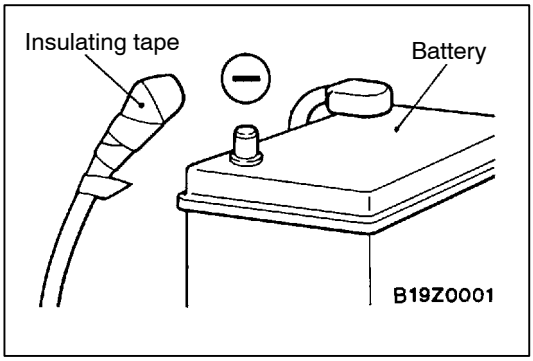


4. **After disconnecting the negative (–) battery cable, wait 60 seconds at least before any service and insulate the disconnected cable with tape. The SRS retain enough voltage to deploy the air bags for a short time even after the disconnection of the battery. So, serious injury may result by accidental air bag deployment if a work is done on the SRS just after the disconnection of the battery.**

**SRS-ECU connector**

**<Vehicles without SRS side air bag>**

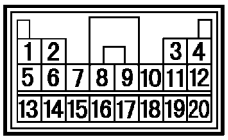


W0997AL

**<Vehicles with SRS side air bag>**

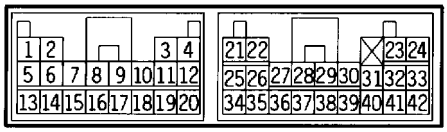


W0582AU

5. Do not attempt to repair the wiring harness connectors of the SRS. If the connector(s) are diagnosed as defective, replace the wiring harness(es). If the harness(es) are diagnosed as faulty, replace or repair the wiring harness(es) according to the table that follows.

Purchased from www.WorkshopManuals.co.uk

www.WorkshopManuals.co.uk

| SRS-ECU Terminal No. | Destination of harness | Corrective action |
|---|---|---|
| 1, 2, 3, 4 | Instrument panel wiring harness → Front wiring harness → Front impact sensor | Repair or replace each wiring harness |
| 7 | Instrument panel wiring harness → Earth | Repair or replace Instrument panel wiring harness |
| 8 | Instrument panel wiring harness → Combination meter (SRS warning lamp) | |
| 9, 10 | Instrument panel wiring harness → Front passenger's air bag module | |
| 11, 12 | Instrument panel wiring harness → Clock spring → Driver's air bag module) | Repair or replace the Instrument panel wiring harness. Replace clock spring. |
| 13 | Instrument panel wiring harness → Junction block (fuse No.8) | Repair or replace Instrument panel wiring harness. |
| 16 | Instrument panel wiring harness → Junction block (fuse No.6) | |
| 20 | Instrument panel wiring harness → Diagnosis connector | |
| 21, 22 | Side air bag wiring harness → Side air bag module (L.H.) | Repair or replace side air bag wiring harness. |
| 23, 24 | Side air bag wiring harness → Side air bag module (R.H.) | |
| 34, 35, 36 | Side air bag wiring harness → Floor wiring harness → Side impact sensor (L.H.) | Repair or each wiring harness. |
| 40, 41, 42 | Side air bag wiring harness → Floor wiring harness → Side impact sensor (R.H.) | |

6. Inspection of the SRS-ECU harness connector should be carried out by the following procedure.
   Insert the special tool (probe, MB991222, in the harness set) into the connector from harness side (rear side), and connect the tester to this probe. If any tool than specified is used, damage to the harness and other components will result. Furthermore, measurement should not be carried out by touching the probe directly against the terminals from the front of the connector. The terminals are plated to increase their conductivity, so that if they are touched directly by the probe, the plating may break, which will cause drops in reliability.

Purchased from www.WorkshopManuals.co.uk

www.WorkshopManuals.co.uk

**<Vehicles without SRS side air bag>**

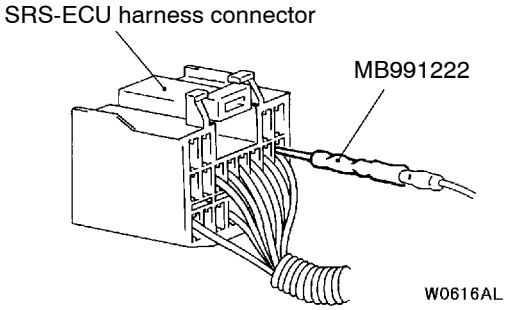


**SRS-ECU harness connector (rear view)**

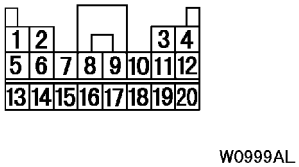


**<Vehicles with SRS side air bag>**

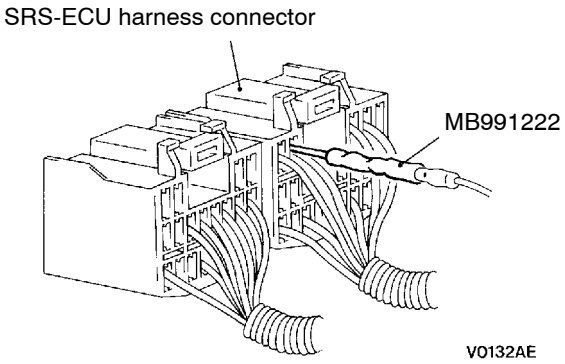


**SRS-ECU harness connector (rear view)**

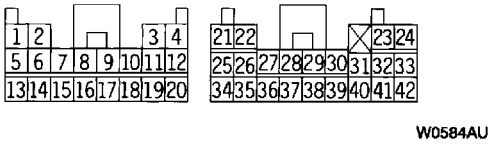


7. SRS components should not be subjected to temperature over 93°C, so remove the SRS-ECU, driver's and front passenger's air bag modules, clock spring, side impact sensors and front seat assemblies (side air bag modules) before drying or baking the vehicle after painting.
8. Whenever you finish servicing the SRS, check warning lamp operation to make sure that the system functions properly. (Refer to GROUP 52B.)
9. Make certain that the ignition switch is LOCK (OFF) position when the MUT-II is connected or disconnected.
10. If you have any questions about the SRS, please contact your local distributor.

NOTE
SERIOUS INJURY CAN RESULT FROM UNINTENDED AIR BAG DEPLOYMENT, SO USE ONLY THE PROCEDURES AND EQUIPMENT SPECIFIED IN THIS MANUAL.

Purchased from www.WorkshopManuals.co.uk

www.WorkshopManuals.co.uk

# SUPPORT LOCATIONS FOR LIFTING AND JACKING

**Caution**
**Do not support the vehicles at locations other than specified supporting points. If do so, this will cause damage, etc.**

## SUPPORT POSITIONS FOR A GARAGE JACK

**Caution**
**Never support any point other than the specified one, or it will be deformed.**

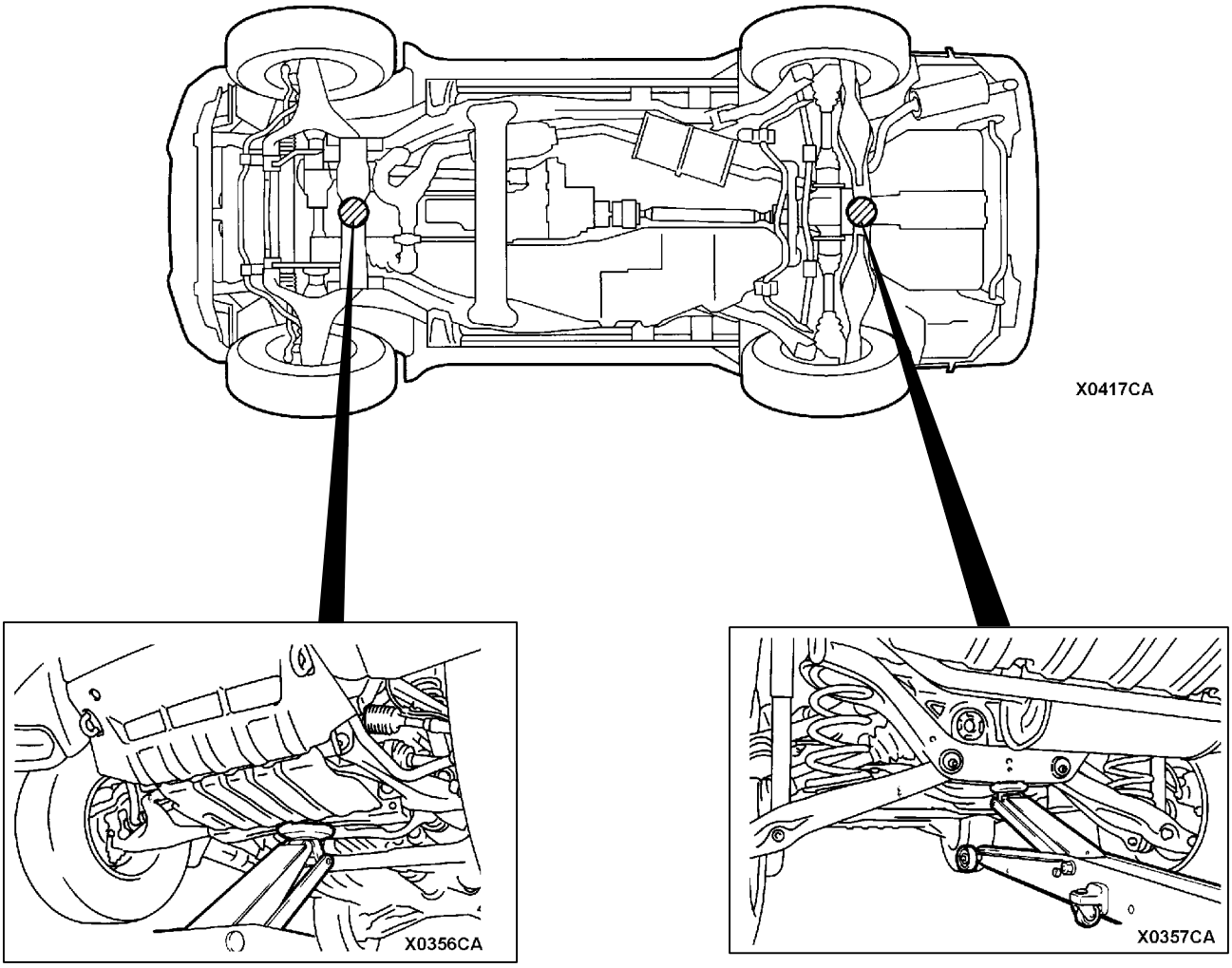


Purchased from www.WorkshopManuals.co.uk

www.WorkshopManuals.co.uk

## SUPPORT POSITIONS FOR AXLE STANDS AND A SINGLE-POST LIFT OR DOUBLE-POST LIFT

**Caution**

1. **If rubber attachments with grooves that are too thick are used at the front support positions, the front fender may become bent, so be sure to use rubber attachments with groove thicknesses of 18 mm or less.**
2. **If attachments which are not high enough are used, they may damage areas such as the side step. Be sure to use attachments which are high enough, or remove the side step if not using attachments.**

**AXLE STANDS**

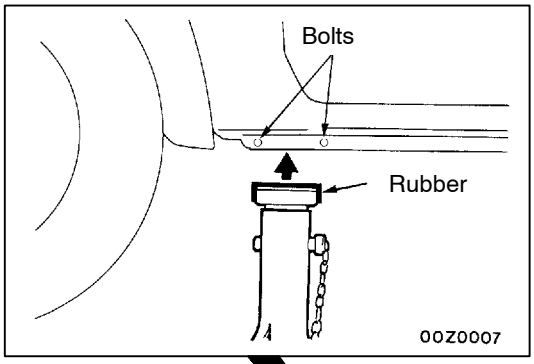


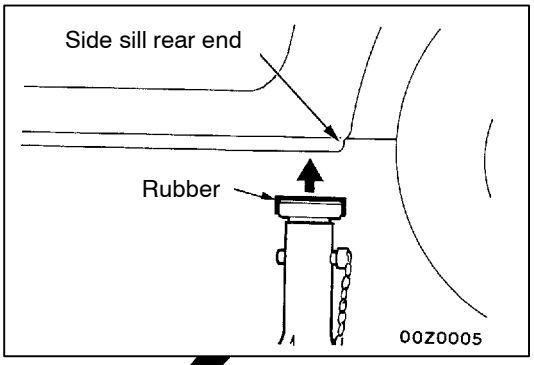


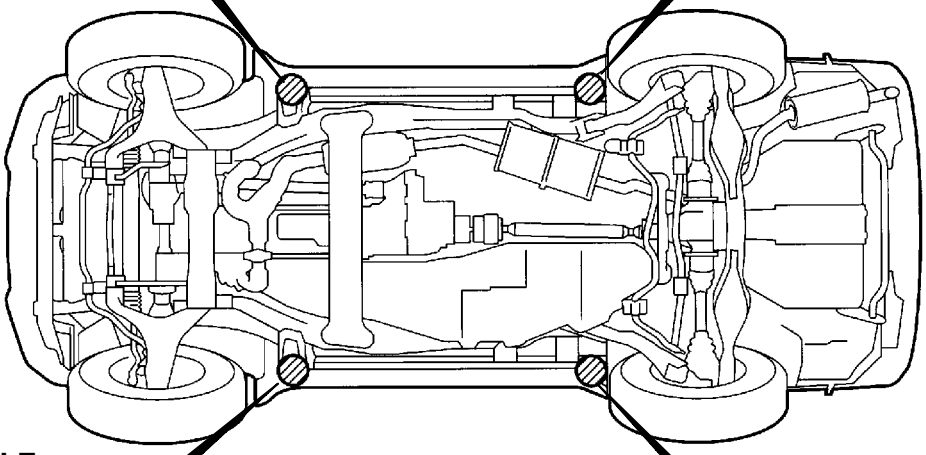


**SINGLE-POST LIFT OR DOUBLE-POST LIFT**

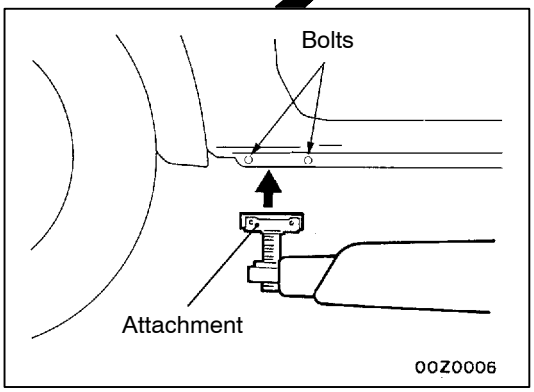


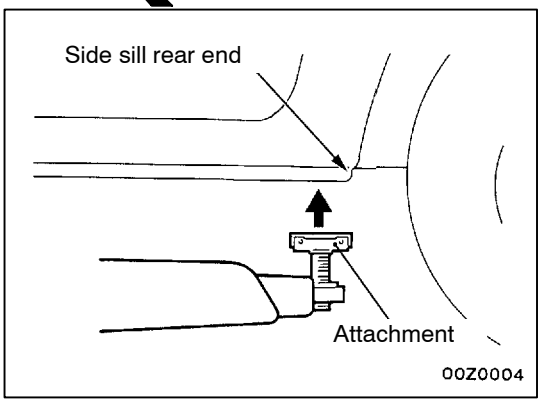


Purchased from www.WorkshopManuals.co.uk

www.WorkshopManuals.co.uk

# STANDARD PART/TIGHTENING-TORQUE TABLE

Each torque value in the table is a standard value for tightening under the following conditions.
(1) Bolts, nuts and washers are all made of steel and plated with zinc.
(2) The threads and bearing surface of bolts and nuts are all in dry condition.

The values in the table are not applicable:
(1) If toothed washers are inserted.
(2) If plastic parts are fastened.
(3) If bolts are tightened to plastic or die-cast inserted nuts.
(4) If self-tapping screws or self-locking nuts are used.

**Standard bolt and nut tightening torque**

| Thread size | | Torque N·m | | |
|---|---|---|---|---|
| Bolt nominal diameter (mm) | Pitch (mm) | Head mark “4” | Head mark “7” | Head mark “8” |
| M5 | 0.8 | 2.5±0.5 | 5.0±1.0 | 6.0±1.0 |
| M6 | 1.0 | 5.0±1.0 | 9.0±2.0 | 10±2 |
| M8 | 1.25 | 12±2 | 22±4 | 25±4 |
| M10 | 1.25 | 24±4 | 44±10 | 53±7 |
| M12 | 1.25 | 41±8 | 83±12 | 98±12 |
| M14 | 1.5 | 73±12 | 140±20 | 155±25 |
| M16 | 1.5 | 110±20 | 210±30 | 235±35 |
| M18 | 1.5 | 165±25 | 300±40 | 340±50 |
| M20 | 1.5 | 225±35 | 410±60 | 480±70 |
| M22 | 1.5 | 300±40 | 555±85 | 645±95 |
| M24 | 1.5 | 395±55 | 735±105 | 855±125 |

**Flange bolt and nut tightening torque**

| Thread size | | Torque N·m | | |
|---|---|---|---|---|
| Bolt nominal diameter (mm) | Pitch (mm) | Head mark “4” | Head mark “7” | Head mark “8” |
| M6 | 1.0 | 5.0±1.0 | 10±2 | 12±2 |
| M8 | 1.25 | 13±2 | 24±4 | 27±5 |
| M10 | 1.25 | 26±4 | 49±9 | 58±7 |
| M10 | 1.5 | 24±4 | 45±8 | 55±10 |
| M12 | 1.25 | 46±8 | 95±15 | 105±15 |
| M12 | 1.75 | 43±8 | 83±12 | 98±12 |

NOTE
1. Be sure to use only the specified bolts and nuts, and always tighten them to the specified torques.
2. Bolts marked with indications such as 4T or 7T are reinforced bolts. The larger the number, the greater the bolt strength.

Purchased from www.WorkshopManuals.co.uk

www.WorkshopManuals.co.uk

# Service Bulletins

**Click on the applicable bookmark to select the Service Bulletin.**

Purchased from www.WorkshopManuals.co.uk

www.WorkshopManuals.co.uk

MITSUBISHI MOTORS

# SERVICE BULLETIN

TECHNICAL SERVICE PLANNING
INTERNATIONAL CAR ADMINISTRATION OFFICE. MITSUBISHI MOTORS CORPORATION

| | | |
|---|---|---|
| SERVICE BULLETIN | NO. : MSB-00E00-009 | |
| | DATE : 2000-10-20 | <MODEL> (EC)PAJERO/MONTERO(V60,V70) <M/Y> 00-10 |
| SUBJECT : ADDITION OF MODELS OF 2001 PAJERO/MONTERO | | |
| GROUP : GENERAL | DRAFTNO. : 00SY090209 | |
| INFORMATION | INTERNATIONAL CAR ADMINISTRATION OFFICE | T. Masaki<br>T. MASAKI - MANAGER<br>TECHNICAL SERVICE PLANNING |

**1. Description:**

On the 2001 PAJERO/MONTERO, the 4M41 engine equipped models have been added.

**2. Applicable Manuals:**

| Manual | Pub. No. |
|---|---|
| 2001 PAJERO Workshop Manual | PWJE0001 (English)<br>PWJS0002 (Spanish) |
| 2001 PAJERO CD-ROM | PWJF0003 (CD-ROM) (French)<br>PWJG0004 (CD-ROM) (German)<br>PWJT0008R (CD-ROM) |

**3. Effective Date:**

From the 2001 model.



Purchased from www.WorkshopManuals.co.uk

www.WorkshopManuals.co.uk



# GROUP 00
# GENERAL

## OUTLINE OF CHANGES

The following models have been added for England that are equipped with the 4M41 engine.

## VEHICLE IDENTIFICATION

### MODELS

**<Short wheelbase>**

| Model code | | Engine model | Transmission model | Fuel supply system |
|---|---|---|---|---|
| V68W | MNHFR6 | 4M41-DOHC Intercooler Turbo (3,200 mL) | V5M31 <5M/T> | Electronically-controlled high pressure fuel distribution |
| | MNHFR6 | | V5A51 <5A/T> | |



Purchased from www.WorkshopManuals.co.uk

www.WorkshopManuals.co.uk



## MAJOR SPECIFICATIONS

**<Short wheelbase>**

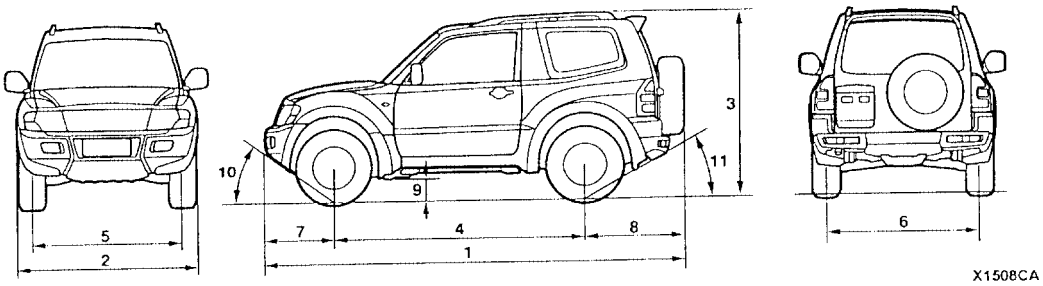


| Items | | | V68W | |
|---|---|---|---|---|
| | | | MNHFR6 | MYHFR6 |
| Vehicle dimensions mm | Overall length | 1 | 4,260 | |
| | Overall width | 2 | 1,845 | |
| | Overall height (unladen) | 3 | 1,845, 1,875*1 | |
| | Wheelbase | 4 | 2,545 | |
| | Track-front | 5 | 1,560 | |
| | Track-rear | 6 | 1,560 | |
| | Overhang-front | 7 | 710 | |
| | Overhang-rear | 8 | 1,000*2, 1,025*3 | |
| | Ground clearance (unladen) | 9 | 225 | |
| | Angle of approach degrees | 10 | 42° | |
| | Angle of departure degrees | 11 | 33.5° | |
| Vehicle weight kg | Kerb weight | | 1,980 | |
| | Max. gross vehicle weight | | 2,510 | |
| | Max. axel weight rating-front | | 1,165 | |
| | Max. axel weight rating-rear | | 1,345 | |
| Seating capacity | | | 5 | |
| Engine | Model No. | | 4M41-DOHC Intercooler Turbo | |
| | Total displacement mL | | 3,200 | |
| Transmission | Model No. | | V5M31 | V5A51 |
| | Type | | 5-speed manual | 5-speed automatic |
| Fuel system | Fuel supply system | | Electronically-controlled high pressure fuel distribution | |

NOTE
*1: Vehicles with roof rails
*2: Vehicles with 235/80R16 Tyre
*3: Vehicles with 265/70R16 Tyre



Purchased from www.WorkshopManuals.co.uk

www.WorkshopManuals.co.uk

MITSUBISHI MOTORS

# SERVICE BULLETIN

TECHNICAL SERVICE PLANNING
INTERNATIONAL CAR ADMINISTRATION OFFICE. MITSUBISHI MOTORS CORPORATION

| SERVICE BULLETIN | NO. : MSB-00E00-505 | |
|---|---|---|
| | DATE : 2001-1-20 | |
| SUBJECT : ESTABLISHMENT OF GDI ENGINE IDLE LEARNING FUNCTION | | |
| GROUP : GENERAL | DRAFTNO. : 00AL610610 | |
| CORRECTION | INTERNATIONAL CAR ADMINISTRATION OFFICE | T. MASAKI - MANAGER TECHNICAL SERVICE PLANNING |

| <MODEL> | <M/Y> |
|---|---|
| (EC)PAJERO/MONTERO(V60,70) | 01-10 |
| (EC)GALANT(EA0) | 99-10 |
| (EC)SPACE RUNNER/SPACE WAGON(N60,80,90) | 99-10 |
| (EC)CARISMA | 98-10 |
| (EC)SPACE STAR(H60,70) | 99-10 |
| (EC)PAJERO PININ | 99-10 |

## 1. Description:

On the GDI engine equipped cars, an idle learning function that will be required after replacement of the ECU (for engine control) or after resetting of the battery* has been established.

*: Disconnection of ECU (for engine control) battery backup power supply (disconnection of battery terminals or ECU connectors)

## 2. Applicable Manuals:

| Manual | Pub. No. | Page |
|---|---|---|
| 2001 PAJERO Workshop Manual VOL.1 | PWJE0001 (1/2) (English) | 00-29 |
| 2001 MONTERO Workshop Manual VOL.1 | PWJS0002 (1/2) (Spanish) | |
| 2001 PAJERO/MONTERO Workshop Manual CD-ROM | PWJT0008R (English) (Spanish) (French) (German) | |
| 1999 GALANT Workshop Manual Supplement | PWDE9611-A (English) | 00-12 |
| | PWDS9612-A (Spanish) | |
| | PWDF9613-A (French) | |
| | PWDG9614-A (German) | |
| | PWDD9615-A (Dutch) | |
| | PWDW9616-A (Swedish) | |
| 1999 SPACE RUNNER/SPACE WAGON Workshop Manual | PWDE9803 (English) | 00-20 |
| | PWDS9804 (Spanish) | |
| | PWDF9805 (French) | |
| | PWDG9806 (German) | |
| | PWDD9807 (Dutch) | |
| | PWDW9808 (Swedish) | |



Purchased from www.WorkshopManuals.co.uk

www.WorkshopManuals.co.uk

**3. Details:**

Contents of Attachment are to be added to GROUP 00 (GENERAL).

## PRECAUTIONS BEFORE SERVICE

### LEARNING FUNCTION OF GDI ENGINE

**1. Purpose**

On the GDI engine equipped cars, when replacement of the ECU (for engine control) or resetting of the battery* has been performed, an idle learning function of the ECU (for engine control) will be required.
The idle learning function will be completed by running the engine at idle by the following procedure.

NOTE:
*: Disconnection of ECU (for engine control) battery backup power supply (disconnection of battery terminals or ECU connectors)

**2. Idle Learning Procedure**

(1) Start the engine, and warm up the engine until its coolant temperature reaches 85°C or higher. When the engine coolant temperature is 85°C or higher, you have only to turn the ignition switch to the ON position.
(2) Turn the ignition switch to the LOCK (OFF) position, and stop the engine.
(3) After lapse of ten or more seconds, restart the engine.
(4) Run the engine at idle for ten minutes under the following conditions.
- Transmission: Neutral (P range for automatic transmission)
- Air conditioner and heater: Not operational
- Engine coolant temperature: 83°C or higher

(5) Stop the engine.
(6) Restart the engine, and run it at idle for ten minutes under the following condition.
- Transmission: Neutral (P range for automatic transmission)
- Air conditioner: Operational (Temperature set at “maximum cool”, fan at high speed, and windows fully opened)
- Engine coolant temperature: 83°C or higher

(7) Repeat steps (5) and (6).

NOTE:
1) When the atmospheric temperature is 20°C or more and the air conditioner has continuously been operated, step (7) may be omitted.
2) During idling operation of the engine in steps (4) and (6), when engine operation switches from lean operation to stoichiometric operation, engine stall can occur. In this case, clean the throttle body (throttle valve) thoroughly, and then repeat step (1) and the subsequent steps.



Purchased from www.WorkshopManuals.co.uk

www.WorkshopManuals.co.uk

# GROUP 00

# GENERAL

## OUTLINE OF CHANGES

The following models are equipped with Mitsubishi Stability Control (MITSUBISHI SC) system.

## VEHICLE IDENTIFICATION

### MODELS

#### <Short wheelbase>

| Model code | | Engine model | Transmission model | Fuel supply system |
|---|---|---|---|---|
| V68W | MNDFL6 | 4M41-DOHC Intercooler Turbo (3,200 mL) | V5M31 <5M/T> | Electronically-controlled high pressure fuel distribution |
| | MNHFL6 | | | |
| | MNHFR6 | | | |
| | MYHFL6 | | V5A51 <5A/T> | |
| | MYHFR6 | | | |
| | MNXFL6 | | V5M31 <5M/T> | |
| | MNXFR6 | | | |
| | MYXFL6 | | V5A51 <5A/T> | |
| | MYXFR6 | | | |
| V65W | MNHCL6 | 6G74GDI (3,496 mL) | V5M31 <5M/T> | GDI |
| | MNHCR6 | | | |
| | MYHCL6 | | V5A51 <5A/T> | |
| | MYHCR6 | | | |
| | MNXCL6 | | V5M31 <5M/T> | |
| | MNXCR6 | | | |
| | MYXCL6 | | V5A51 <5A/T> | |
| | MYXCR6 | | | |

Purchased from www.WorkshopManuals.co.uk

www.WorkshopManuals.co.uk

## <Long wheelbase>

| Model code | | Engine model | Transmission model | Fuel supply system |
|---|---|---|---|---|
| V78W | LNDFL6 | 4M41-DOHC Intercooler Turbo (3,200 mL) | V5M31 <5M/T> | Electronically-controlled high pressure fuel distribution |
| | LNHFL6 | | | |
| | LNHFR6 | | | |
| | LYHFL6 | | V5A51 <5A/T> | |
| | LYHFR6 | | | |
| | LNXFL6 | | V5M31 <5M/T> | |
| | LNXFR6 | | | |
| | LYXFL6 | | V5A51 <5A/T> | |
| | LYXFR6 | | | |
| V75W | LNHCL6 | 6G74GDI (3,496 mL) | V5M31 <5M/T> | GDI |
| | LNHCR6 | | | |
| | LYHCL6 | | V5A51 <5A/T> | |
| | LYHCR6 | | | |
| | LNXCL6 | | V5M31 <5M/T> | |
| | LNXCR6 | | | |
| | LYXCL6 | | V5A51 <5A/T> | |
| | LYXCR6 | | | |

Purchased from www.WorkshopManuals.co.uk

www.WorkshopManuals.co.uk

# GROUP 00

# GENERAL

## INSPECTION SERVICE POINTS

### DIAGNOSIS FUNCTION

#### WHEN USING THE WARNING LAMP

The diagnosis code read-out function, which is available by means of the neutral position indicator lamp, has been discontinued <Vehicles with 6G74 GDI>.

## VEHICLE IDENTIFICATION

### MODELS

#### <Short wheelbase>

| Model code | | Engine model | Transmission model | Fuel supply system |
|---|---|---|---|---|
| V64W | MNDFL6 | 4D56 Intercooler Turbo (2,477 mL) | V5MT1 <5M/T> | Injection |
| | MNHFL6 | | V5M31 <5M/T> | |
| | MNHFR6 | | | |
| | MNXFL6 | | | |
| | MNXFR6 | | | |
| V68W | MNDFL6 | 4M41-DOHC Intercooler Turbo (3,200 mL) | V5M31 <5M/T> | Electronically-controlled high pressure fuel distribution |
| | MNHFL6 | | | |
| | MNHFR6 | | | |
| | MYHFL6 | | V5A51 <5A/T> | |
| | MYHFR6 | | | |
| | MNXFL6 | | V5M31 <5M/T> | |
| | MNXFR6 | | | |
| | MYXFL6 | | V5A51 <5A/T> | |
| | MYXFR6 | | | |
| V65W | MYHCL6 | 6G74 GDI (3,496 mL) | V5A51 <5A/T> | GDI |
| | MYHCR6 | | | |
| | MNXCL6 | | V5M31 <5M/T> | |
| | MYXCL6 | | V5A51 <5A/T> | |
| | MYXCR6 | | | |

Purchased from www.WorkshopManuals.co.uk

www.WorkshopManuals.co.uk

## <Long wheelbase>

| Model code | | Engine model | Transmission model | Fuel supply system |
|---|---|---|---|---|
| V74W | LNDFL6 | 4D56 Intercooler Turbo (2,477 mL) | V5MT1 <5M/T> | Injection |
| | LNHFL6 | | V5M31 <5M/T> | |
| | LNXFL6 | | | |
| V78W | LNDFL6 | 4M41-DOHC Intercooler Turbo (3,200 mL) | V5M31 <5M/T> | Electronically-controlled high pressure fuel distribution |
| | LNHFL6 | | | |
| | LNHFR6 | | | |
| | LYHFL6 | | V5A51 <5A/T> | |
| | LYHFR6 | | | |
| | LNXFL6 | | V5M31 <5M/T> | |
| | LNXFR6 | | | |
| | LYXFL6 | | V5A51 <5A/T> | |
| | LYXFR6 | | | |
| V75W | LYHCL6 | 6G74 GDI (3,496 mL) | V5A51 <5A/T> | GDI |
| | LYHCR6 | | | |
| | LNXCL6 | | V5M31 <5M/T> | |
| | LYXCL6 | | V5A51 <5A/T> | |
| | LYXCR6 | | | |

Purchased from www.WorkshopManuals.co.uk

www.WorkshopManuals.co.uk

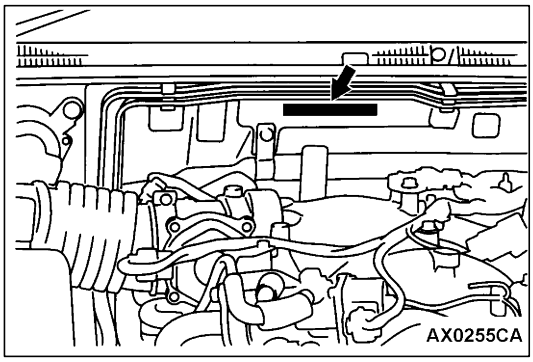


## CHASSIS NUMBER

The chassis number is stamped on the toeboard inside the engine compartment.

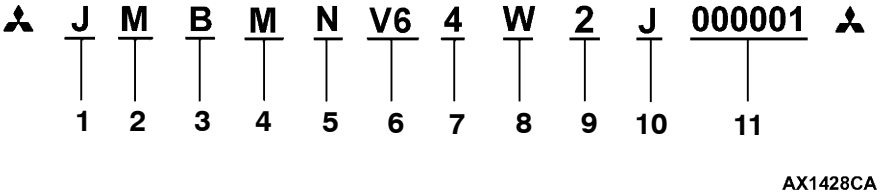


| No. | Items | | Contents |
|---|---|---|---|
| 1 | Fixed figure | J | Asia |
| 2 | Distribution channel | M | Japan channel |
| 3 | Destination | A | For Europe, right hand drive |
| | | B | For Europe, left hand drive |
| 4 | Body style | M | 3-door |
| | | L | 5-door |
| 5 | Transmission type | N | 5-speed manual transmission |
| | | Y | 5-speed automatic transmission |
| 6 | Development order | V6 | MITSUBISHI PAJERO short wheelbase |
| | | V7 | MITSUBISHI PAJERO long wheelbase |
| 7 | Engine | 4 | 4D56: 2,477 mL diesel engine |
| | | 5 | 6G74: 3,496 mL petrol engine |
| | | 8 | 4M41: 3,200 mL diesel engine |
| 8 | Sort | W | Station wagon |
| 9 | Model year | 2* | 2002 |
| 10 | Plant | J | Pajero Manufacturing Co., Ltd. * |
| 11 | Serial number | - | - |

NOTE
*: Indicates changes.

Purchased from www.WorkshopManuals.co.uk

www.WorkshopManuals.co.uk

# MAJOR SPECIFICATIONS

The items other than listed below are the same as before.

## <Short wheelbase>

| Items | | V64W | | |
|---|---|---|---|---|
| | | MNDFL6 | MNHFL6, MNHFR6 | MNXFL6, MNXFR6 |
| Vehicle weight kg | Kerb weight | 1,875 | 1,910 | 1,930 |
| | Max. gross vehicle weight | 2,510 | | |
| | Max. axle weight rating-front | 1,200 | | |
| | Max. axle weight rating-rear | 1,600 | | |

## <Long wheelbase>

| Items | | V74W | | |
|---|---|---|---|---|
| | | LNDFL6 | LNHFL6 | LNXFL6 |
| Vehicle weight kg | Kerb weight | 2,025 | 2,065 | 2,100 |
| | Max. gross vehicle weight | 2,760 | | |
| | Max. axle weight rating-front | 1,200 | | |
| | Max. axle weight rating-rear | 1,650 | | |

| Items | | V78W | | | | |
|---|---|---|---|---|---|---|
| | | LNDFL6 | LNHFL6, LNHFR6 | LYHFL6, LYHFR6 | LNXFL6, LNXFR6 | LYXFL6, LYXFR6 |
| Vehicle weight kg | Max. gross vehicle weight | 2,810 | | | | |
| | Max. axle weight rating-front | 1,200 | | | | |
| | Max. axle weight rating-rear | 1,650 | | | | |

Purchased from www.WorkshopManuals.co.uk

www.WorkshopManuals.co.uk

# PRECAUTIONS BEFORE SERVICE

## SUPPLEMENTAL RESTRAINT SYSTEM (SRS), SEAT BELT WITH PRE-TENSIONER

1. Items to follow when servicing SRS
   (1) Be sure to read GROUP 52B - Supplemental Restraint System (SRS).
   For safe operations, please follow the directions and heed all warnings.
   (2) Wait at least 60 seconds after disconnecting the battery cable before doing any further work.
   The SRS system is designed to retain enough voltage to deploy the air bag even after the battery has been disconnected. Serious injury may result from unintended air bag deployment if work is done on the SRS system immediately after the battery cable is disconnected.
   (3) Warning labels must be heeded when servicing or handling SRS components and seat belt with pre-tensioner. Warning labels are located in the following locations.
   - Hood
   - Sun visor
   - Glove box
   - SRS-ECU
   - Steering wheel
   - Steering gearbox
   - Air bag module (driver's side and front passenger's side)
   - Front impact sensor
   - Clock spring
   - Seat belt with pre-tensioner
   - Side air bag module
   - Side impact sensor

   (4) Always use the designated special tools and test equipment.
   (5) Store components removed from the SRS and seat belt with pre-tensioner in a clean and dry place.
   The air bag module and seat belt with pre-tensioner should be stored on a flat surface and placed so that the pad surface is facing upward.
   Do not place anything on top of it.
   (6) Never attempt to disassemble or repair the SRS components (SRS-ECU, air bag module, clock spring and side impact sensor) and seat belt with pre-tensioner.
   (7) Whenever you finish servicing the SRS and seat belt with pre-tensioner, check the SRS warning lamp operation to make sure that the system functions properly.
   (8) Be sure to deploy the air bag and seat belt with pre-tensioner before disposing of the air bag module and seat belt with pre-tensioner or disposing of a vehicle equipped with an air bag and seat belt with pre-tensioner. (Refer to GROUP 52B - Air Bag Module and Seat Belt with Pre-tensioner Disposal Procedures.)
2. Observe the following when carrying out operations on places where SRS components and seat belt with pre-tensioner are installed, including operations not directly related to the SRS air bag and seat belt with pre-tensioner.
   (1) When removing or installing parts do not allow any impact or shock to the SRS components and seat belt with pre-tensioner.
   (2) SRS components and seat belt with pre-tensioner should not be subjected to heat, so remove the SRS components and seat belt with pre-tensioner before drying or baking the vehicle after painting.
   - SRS-ECU, air bag module, clock spring, front and side impact sensors: 93°C or more
   - Seat belt with pre-tensioner: 90°C or more

   After re-installing them, check the SRS warning lamp operation to make sure that the system functions properly.

Purchased from www.WorkshopManuals.co.uk

www.WorkshopManuals.co.uk

**NOTES**

Purchased from www.WorkshopManuals.co.uk

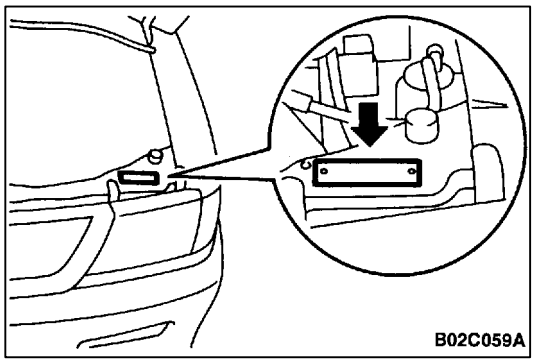


# VEHICLE IDENTIFICATION

00100540177

## VEHICLE INFORMATION CODE PLATE

### LOCATION

Vehicle information code plate is riveted onto the headlamp support panel in the engine compartment.

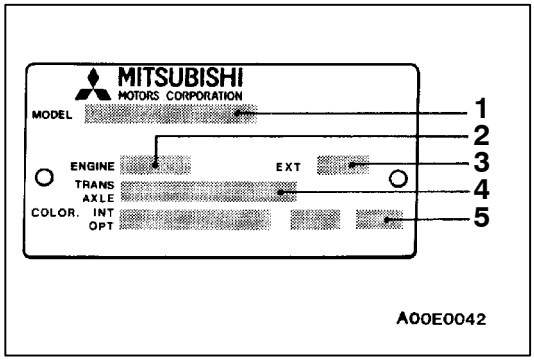


### CODE PLATE DESCRIPTION

The plate shows model code, engine model, transmission model, and body colour code.

| No. | Item | Contents | |
|---|---|---|---|
| 1 | MODEL | K96WGNHER6 | K96WG: Vehicle model |
| | | | NHER6: Model series |
| 2 | ENGINE | 6G72 | Engine model |
| 3 | EXT | B60B | Exterior code |
| 4 | TRANS AXLE | V5MT1 4636 | V5MT1: Transmission code |
| | | | 4636: Rear differential reduction |
| 5 | COLOR INT OPT | B60 41H 03V | B60: Body colour code |
| | | | 41H: Interior code |
| | | | 03V: Equipment code |

For monotone colour vehicles, the body colour code shall be indicated. For two-tone colour vehicles, each colour code only shall be indicated in series.

## MODELS

00100550132

| Model code | | Engine model | Transmission model | Fuel supply system |
|---|---|---|---|---|
| K96WG | NHEL6 | 6G72-SOHC (2,972 mL) | V5MT1(4WD-5M/T) | MPI |
| | NHER6 | | | |
| K94W | NUFL6 | 4D56 (2,477 mL) | | Fuel injection |
| | NUFR6 | | | |
| K94WG | NHFL6 | | | |
| | NHFR6 | | | |

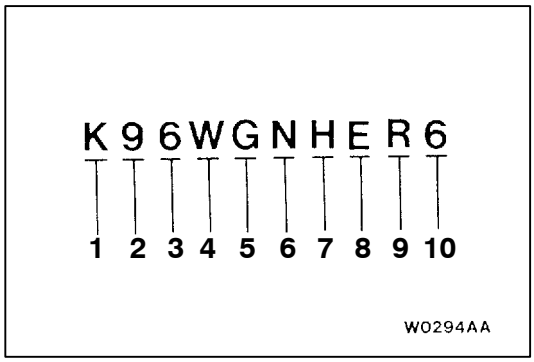


## MODEL CODE

00100040400

| No. | Items | Contents |
|---|---|---|
| 1 | Vehicle line | K: Challenger |
| 2 | Drive system | 9: 4WD |
| 3 | Engine system | 4: 2,477 mL Diesel engine |
| | | 6: 2,972 mL Petrol engine |
| 4 | Group | W: Wagon |
| 5 | Vehicle width | G: Wide fender |
| 6 | Transmission type | N: 5-speed manual transmission |
| 7 | Vehicle grade | U: GLX |
| | | H: GLS |
| 8 | Specified engine feature | E: MPI |
| | | F: I/C T/C |

| No. | Items | Contents |
|---|---|---|
| 9 | Steering wheel location | L: Left hand |
| | | R: Right hand |
| 10 | Destination | 8: For Europe |

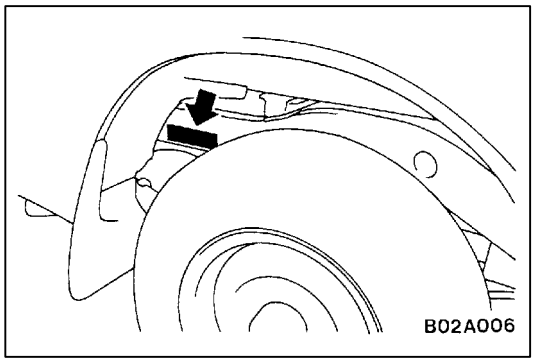


## CHASSIS NUMBER

00100560142

The chassis number is stamped on the side wall of the frame near the rear wheel (R.H.).

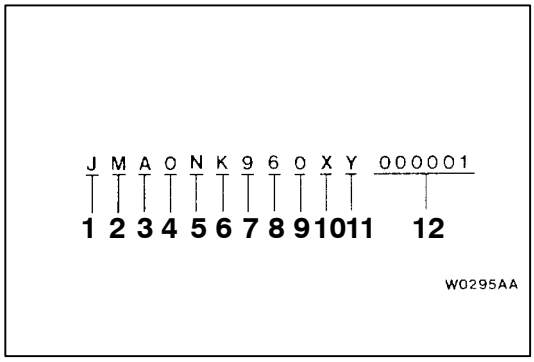


| No. | Items | | Contents |
|---|---|---|---|
| 1 | Fixed figure | J | Asia |
| 2 | Distribution channel | M | Japan channel |
| 3 | Destination | A | Right hand drive |
| | | B | Left hand drive |
| 4 | Body style | 0 | 4 door tailgate |
| 5 | Transmission type | N | 5-speed manual transmission |
| 6 | Vehicle line | K | Pajero sport |
| 7 | Body type | 9 | 4WD |
| 8 | Engine type | 4 | 4D56: 2,477 mL diesel engine |
| | | 6 | 6G72: 2,972 mL petrol engine |
| 9 | Body style | 0 | Frame |
| 10 | Model year | X | 1999 - 2006 |

| No. | Items | | Contents |
|---|---|---|---|
| 11 | Plant | Y,P | Ooe Plant of Nagoya Motor Vehicle Works |
| 12 | Serial number | – | – |

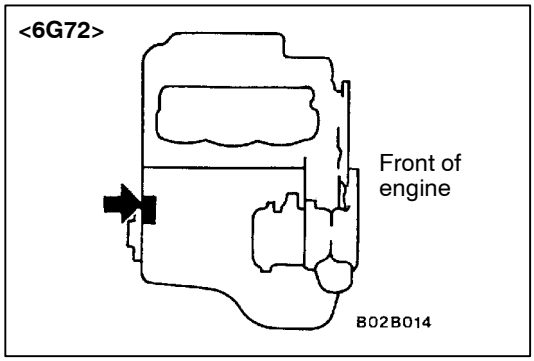


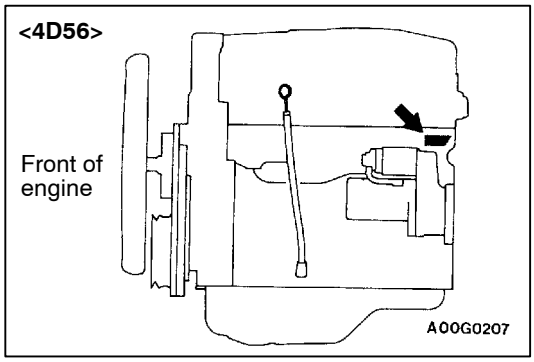


## ENGINE MODEL NUMBER

1. The engine model number is stamped at the cylinder block as shown in the following.

| Engine model | Engine displacement mL |
|---|---|
| 6G72 | 2,972 |
| 4D56 | 2,477 |

2. The engine serial number is stamped near the engine model number.

| | |
|---|---|
| Engine serial number | AA0201 to YY9999 |

# MAJOR SPECIFICATIONS

00100090382

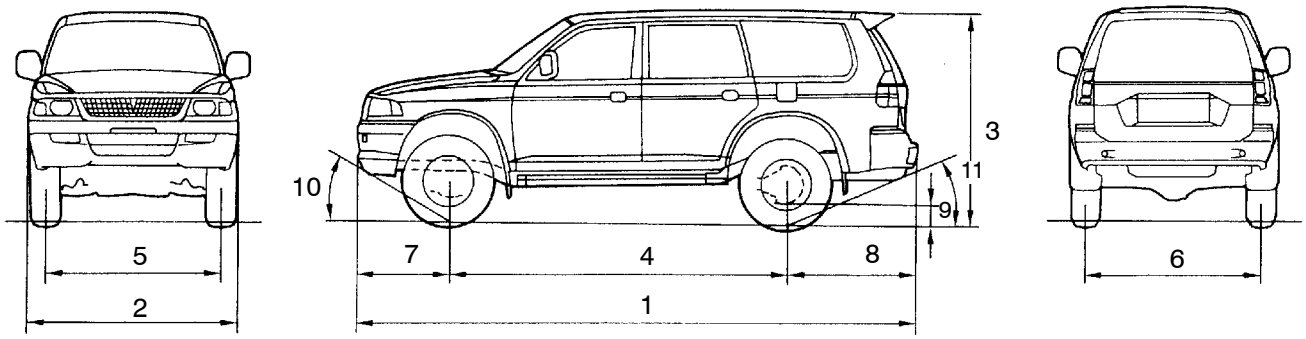


T0303AA

| Items | | | K96WGNHE L6/R6 | K94WNUF L6/R6 | K94WGNHF L6/R6 |
|---|---|---|---|---|---|
| Vehicle dimensions mm | Overall length | 1 | 4,545 | 4,545 | 4,545 |
| | Overall width | 2 | 1,775 | 1,695 | 1,775 |
| | Overall height (unladen) | 3 | 1,730 | 1,720 | 1,730 |
| | Wheelbase | 4 | 2,725 | 2,725 | 2,725 |
| | Tread-front | 5 | 1,465 | 1,420 | 1,465 |
| | Tread-rear | 6 | 1,480 | 1,435 | 1,480 |
| | Overhang-front | 7 | 765 | 765 | 765 |
| | Overhang-rear | 8 | 1,055 | 1,055 | 1,055 |
| | Ground clearance (unladen) | 9 | 215 | 205 | 215 |
| | Angle of approach degress | 10 | 37° | 36° | 37° |
| | Angle of departure degress | 11 | 26° | 25° | 26° |
| Vehicle weight kg | Kerb weight | | 1,845 | 1,825 | 1,895 |
| | Max. gross vehicle weight rating | | 2,510 | 2,510 | 2,510 |
| | Max. axle weight rating-front | | 1,110 | 1,110 | 1,145 |
| | Max. axle weight rating-rear | | 1,400 | 1,400 | 1,365 |
| | Max. trailer weight | With brake | 2,800 | 2,800 | 2,800 |
| | | Without brake | 750 | 750 | 750 |
| | Max. trailer-nose weight | | 115 | 115 | 115 |
| Seating capacity | | | 5 | 5 | 5 |
| Engine | Model No. | | 6G72 | 4D56 | 4D56 |
| | Total displacement mL | | 2,972 | 2,477 | 2,477 |
| Transmission | Model No. | | V5MT1 | V5MT1 | V5MT1 |
| | Type | | 5-speed manual | 5-speed manual | 5-speed manual |
| Fuel system | Fuel supply system | | MPI | Fuel injection | Fuel injection |

www.WorkshopManuals.co.uk

# ENGINE <6G7>

**Click on the applicable bookmark to selected the required model year.**

Purchased from www.WorkshopManuals.co.uk

www.WorkshopManuals.co.uk

# ENGINE <6G7>

## CONTENTS

**GENERAL INFORMATION** . . . . . 3

**SERVICE SPECIFICATIONS** . . . . . 3

**SEALANT** . . . . . 4

**SPECIAL TOOLS** . . . . . 4

**ON-VEHICLE SERVICE** . . . . . 6

Drive Belt Tension Check and Adjustment . . . . . 6

Auto-tensioner Check . . . . . 6

Ignition Timing Check . . . . . 6

Idle Speed Check . . . . . 7

Idle Mixture Check . . . . . 8

Compression Pressure Check . . . . . 9

Intake Manifold Vacuum Check . . . . . 10

Lash Adjuster Check . . . . . 10

**OIL PAN AND OIL SCREEN** . . . . . 13

**TIMING BELT** . . . . . 15

**CRANKSHAFT OIL SEAL** . . . . . 23

**CAMSHAFT OIL SEAL** . . . . . 25

**CYLINDER HEAD GASKET** . . . . . 27

**ENGINE ASSEMBLY** . . . . . 30

Purchased from www.WorkshopManuals.co.uk

www.WorkshopManuals.co.uk

# GENERAL INFORMATION

| | | | |
|---|---|---|---|
| Items | | | 6G74-GDI |
| Total displacement ml | | | 3,497 |
| Bore × Stroke mm | | | 93 × 85.8 |
| Compression ratio | | | 10.4 |
| Combustion chamber | | | Pentroof + ball-in-piston |
| Camshaft arrangement | | | DOHC |
| Number of valve | Intake | | 12 |
| | Exhaust | | 12 |
| Valve timing | Intake | Opening | BTDC 8° |
| | | Closing | ABDC 56° |
| | Exhaust | Opening | BBDC 48° |
| | | Closing | ATDC 16° |
| Fuel system | | | Electronically controlled multipoint fuel injection |
| Rocker arm | | | Roller type |
| Auto-lash adjuster | | | Equipped |

# SERVICE SPECIFICATIONS

| Items | Standard value | Limit |
|---|---|---|
| Basic ignition timing | 5°BTDC ± 3° | - |
| Ignition timing | Approx. 20°BTDC*1 | - |
| Idle speed r/min | 600 ± 100*1 | - |
| CO contents % | 0.5 or less | - |
| HC contents ppm | 100 or less | - |
| Compression pressure (at engine speed of 280 r/min) kPa | 1,275 | 980 |
| Compression pressure difference of all cylinders kPa | - | Max. 98 |
| Intake manifold vacuum kPa | - | Min. 56*2 |
| Auto tensioner rod depth (mm) | Within 1 | - |
| Timing belt tension torque N·m | 4.4 | - |
| Auto-tensioner rod protrusion amount mm | 3.8 - 5.0 | - |

NOTE
*1: Indicates the value measured within 4 minutes since the engine was started.
*2: Indicates the value when more than 4 minutes have passed since the engine was started.

Purchased from www.WorkshopManuals.co.uk

www.WorkshopManuals.co.uk

## SEALANT

| Items | Specified sealants | Remarks |
|---|---|---|
| Oil pan | MITSUBISHI GENUINE PART MD970389 or equivalent | Semi-drying sealant |

## SPECIAL TOOLS

| Tool | Number | Name | Use |
|---|---|---|---|
| 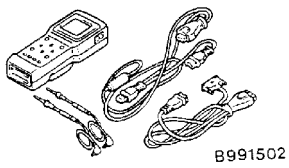  | MB991502 | MUT-II sub assembly | ● Checking the ignition timing<br>● Checking the idle speed<br>● Erasing diagnosis code |
| 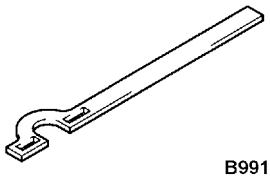  | MB991800 | Pulley holder | Supporting of crankshaft pulley |
| 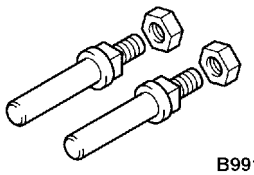  | MB991802 | Pin B | |
| | MD998769 | Crankshaft pulley spacer | Operating the crankshaft when installing the timing belt |
| 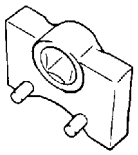 | MD998767 | Tension pulley socket wrench | Timing belt tension adjustment |
| 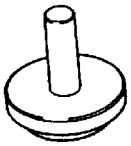 | MD998718 | Crankshaft rear oil seal installer | Press-fitting the crankshaft rear oil seal |
| 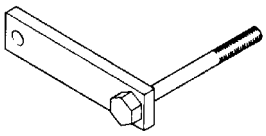 | MD998781 | Flywheel stopper | Securing the flywheel |

Purchased from www.WorkshopManuals.co.uk

www.WorkshopManuals.co.uk

| Tool | Number | Name | Use |
|---|---|---|---|
| 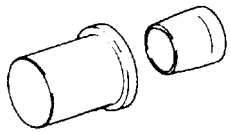 | MD998717 | Crankshaft front oil seal installer | Press-in of the crankshaft front oil seal |
| 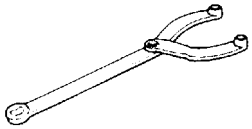 | MB990767 | End yoke holder | Supporting of camshaft sprocket |
| 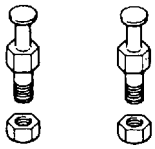 | MD998719 | Crankshaft pulley holder pin | |
| 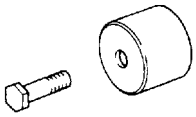 | MD998761 | Camshaft oil seal installer | Press-in of the camshaft oil seal |
| 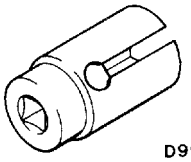 D998773 | MD998773 | Detonation sensor wrench | Detonation sensor removal and installation |
| 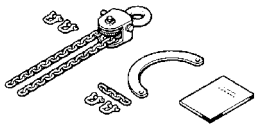 B991683 | MB991683 | Sling chain set | Removal and installation of engine assembly |

Purchased from www.WorkshopManuals.co.uk

www.WorkshopManuals.co.uk

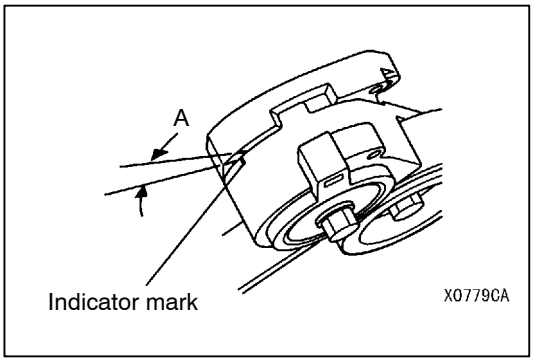


# ON-VEHICLE SERVICE

## DRIVE BELT TENSION CHECK AND ADJUSTMENT

**Caution**
**Perform the check after rotating the engine to the normal direction (one revolution and over).**

1. Check that the indicator mark of the auto-tensioner is located within the scope shown as ”A” on the tensioner bracket.
2. If the mark is located out of the scope ”A,” replace the drive belt.

   NOTE
   Since the auto-tensioner is used, it is not necessary to adjust the tension of the belt.

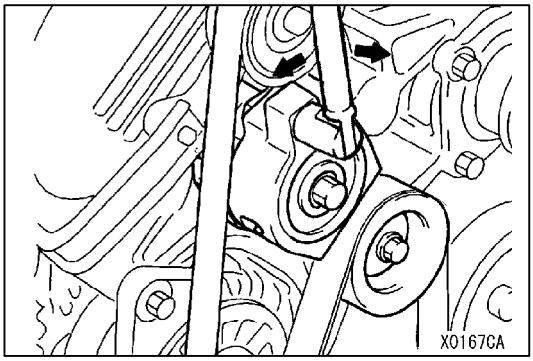


## AUTO-TENSIONER CHECK

1. Run the engine at idling speed and then stop it to check whether the drive belt is forced out from the width of the auto-tensioner pulley.
2. Remove the drive belt. (Refer P.11A-17.)
3. Move the auto-tensioner right and left by using a 12.7 mm spinner handle and the like to check whether there is no catch.
4. If some abnormality is found during the above mentioned check (1) and (3), replace the auto-tensioner.
5. Install the drive belt. (Refer P.11A-18.)

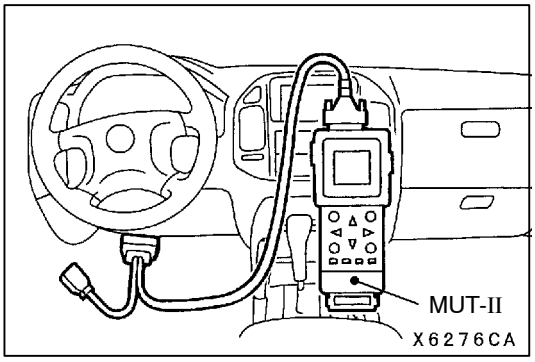


## IGNITION TIMING CHECK

1. Before inspection, set the vehicle to the pre-inspection condition.
2. Turn the ignition switch to the LOCK (OFF) position, and then connect the MUT-II to the diagnosis connector.

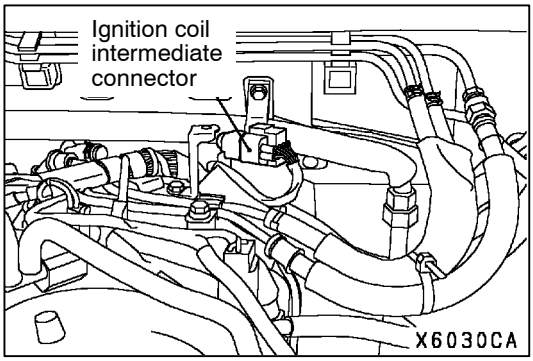


3. Set a timing light to the ignition coil power supply line (intermediate connector No. 7 terminal) of the ignition coil intermediate connector engine-side harness.
4. Start the engine and let it run at idle.
5. Use the MUT-II to measure engine idle speed and check that it is within the standard value.

   **Standard value: 600 ± 100 (700 ± 100)***

   NOTE
   *: Indicates the values when more than 4 minutes have passed since the idling condition was started.

Purchased from www.WorkshopManuals.co.uk

www.WorkshopManuals.co.uk

6. Select No.17 of the MUT-II Actuator test.

   NOTE
   At this time, the engine speed will become approximately 700 r/min.

7. Check that basic ignition timing is within the standard value.

   **Standard value: 5°BTDC ± 3°**

8. If the basic ignition timing is outside the standard value, inspect the GDI system while referring to GROUP 13A - Troubleshooting.
9. Press the MUT-II clear key (Select a forced driving cancel mode) to release the Actuator test.

   **Caution**
   **If the test is not cancelled, a forced driving will continue for 27 minutes. Driving under this condition may damage the engine.**

10. Check that ignition timing is at the standard value.

    **Standard value: approx. 20°BTDC (AT)**
    **approx. 13°BTDC (MT)**

    NOTE
    (1) The ignition timing will become approximately 5°BTDC after more than 4 minutes have passed since the basic ignition timing set mode was released.
    (2) The ignition timing may fluctuate within ±7°BTDC. This is normal.
    (3) In higher altitude, the ignition timing is more advanced than the standard value by approximately 5 degree.

11. Remove the timing light.
12. Turn the ignition switch to the lock (OFF) position, and then disconnect the MUT-II.

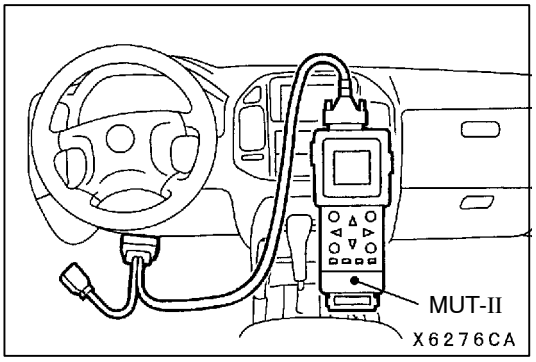


## IDLE SPEED CHECK

1. Before inspection, set the vehicle to the pre-inspection condition.
2. Turn the ignition switch to the lock (OFF) position, and then connect the MUT-II to the diagnosis connector.
3. Check the basic ignition timing.

   NOTE
   Refer to P.11A-6 concerning the check procedure of the basic ignition timing.

   **Standard value: 5°BTDC ± 3°**

4. Check the idle speed. Select item No. 22 and take a reading of the idle speed.

   **Standard value: 600 ± 100 (700 ± 100)***

   NOTE
   (1) *: Indicates the values when more than 4 minutes have passed since the idling condition was started.
   (2) The idle speed is controlled automatically by the idle speed control system.

Purchased from www.WorkshopManuals.co.uk

www.WorkshopManuals.co.uk

5. If the idle speed is outside the standard value, inspect the GDI components by referring to GROUP 13A - Troubleshooting.

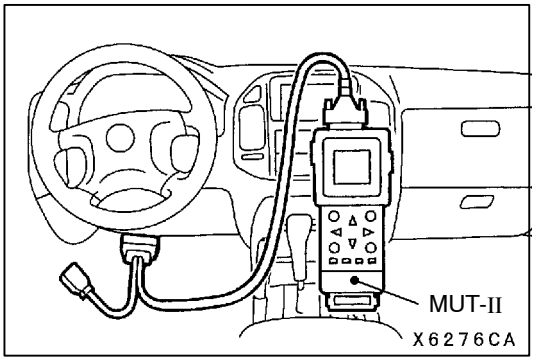


## IDLE MIXTURE CHECK

1. Before inspection, set the vehicle to the pre-inspection condition.
2. Turn the ignition switch to the lock (OFF) position, and then connect the MUT-II to the diagnosis connector.
3. Check that the basic ignition timing is within the standard value.

   NOTE
   Refer to P.11A-6 concerning the check procedure of the basic ignition timing.

   **Standard value: 5°BTDC ± 3°**

4. Run the engine at 2,500 r/min for 2 minutes.
5. Set the CO, HC tester.
6. Check the CO contents and the HC contents at idle.

   NOTE
   This measurement should be performed in less than approximately 4 minutes since the engine speed become the idle speed.

   **Standard value**
   **CO contents: 0.5% or less**
   **HC contents: 100 ppm or less**

7. If there is a deviation from the standard value, check the following items:
   - Diagnosis output
   - Fuel pressure
   - Injector
   - Ignition coil, spark plug
   - EGR control system
   - Evaporative emission control system
   - Compression pressure

   NOTE
   Replace the three way catalyst when the CO and HC contents are not within the standard value, even though the result of the inspection is normal on all items.

Purchased from www.WorkshopManuals.co.uk

www.WorkshopManuals.co.uk

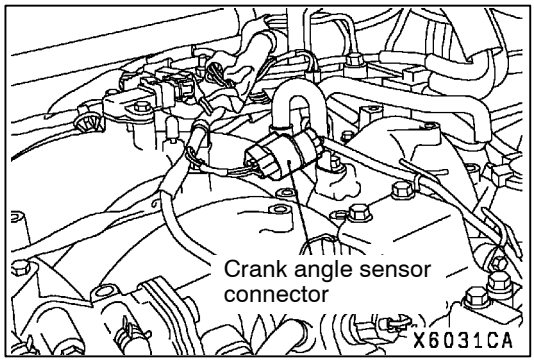


## COMPRESSION PRESSURE CHECK

1. Before inspection, check that the engine oil, starter and battery are normal. In addition, set the vehicle to the pre-inspection condition.
2. Remove all of the ignition coils and spark plugs.
3. Disconnect the crank angle sensor connector.

   NOTE
   Doing this will prevent the engine-A/T-ECU from carrying out ignition and fuel injection.

4. Cover the spark plug hole with a shop towel etc., and after the engine has been cranked, check that no foreign material is adhering to the shop towel.

   **Caution**
   **(1) Keep away from the spark plug hole when cranking.**
   **(2) If compression is measured with water, oil, fuel, etc., that has come from cracks inside the cylinder, these materials will become heated and will gush out from the spark plug hole, which is dangerous.**

5. Set compression gauge to one of the spark plug holes.
6. Crank the engine with the throttle valve fully open and measure the compression pressure.

   **Standard value (at engine speed of 280 r/min): 1,275 kPa**

   **Limit (at engine speed of 280 r/min): Min. 980 kPa**

7. Measure the compression pressure for all the cylinders, and check that the pressure differences of the cylinders are below the limit.

   **Limit: Max. 98 kPa**

8. If there is a cylinder with compression or a compression difference that is outside the limit, pour a small amount of engine oil through the spark plug hole, and repeat the operations in steps 6 and 7.
   (1) If the compression increases after oil is added, the cause of the malfunction is a worn or damaged piston ring and/or cylinder inner surface.
   (2) If the compression does not rise after oil is added, the cause is a burnt or defective valve seat, or pressure is leaking from the gasket.
9. Connect the crank angle sensor connector.
10. Install the spark plugs and ignition coils.
11. Use the MUT-II to erase the diagnosis codes.

    NOTE
    This will erase the diagnosis code resulting from the crank angle sensor connector being disconnected.

Purchased from www.WorkshopManuals.co.uk

www.WorkshopManuals.co.uk

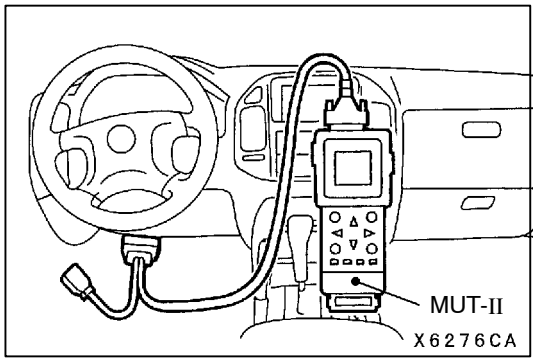


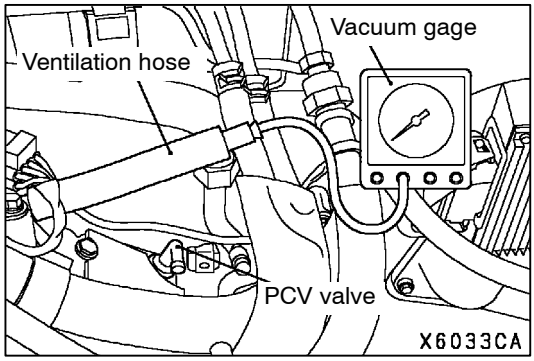


## INTAKE MANIFOLD VACUUM CHECK

1. Before inspection, set the vehicle to the pre-inspection condition.
2. Turn the ignition switch to the LOCK (OFF) position.
3. Connect the diagnosis connector to the MUT-II.
4. Remove the ventilation hose from the PCV valve, connect the ventilation hose to a vacuum gauge, and then plug the PCV valve.
5. Start the engine, and let it run at idle.
6. Keep the engine run at idle for at least 4 minutes. The idle speed should be 700 r/min.
7. Check the intake manifold vacuum.

   **Limit: Min. 60 kPa**
8. Turn the ignition switch to the LOCK (OFF) position.
9. Remove the vacuum gauge, and return the ventilation hose to its normal condition.
10. Remove the MUT-II.

## LASH ADJUSTER CHECK

If an abnormal noise (knocking) that seems to be coming from the lash adjuster is heard after starting the engine and does not stop, carry out the following check.

NOTE

(1) If the vehicle is parked on a slope for a long period of time, the amount of oil inside the lash adjuster will decrease, and air may get into the high pressure chamber when starting the engine.

(2) After parking the vehicle for long periods, the oil drains out of the oil passage, and it takes time for the oil to be supplied to the lash adjuster, so air can get into the high pressure chamber.

(3) If either of the above situations occur, the abnormal noise can be eliminated by bleeding the air from inside the lash adjusters.

(4) The abnormal noise, which is caused by a defective lash adjuster, occurs immediately after the engine start and changes in accordance with the engine speed, but not the engine load.

(5) If there is a problem with the lash adjusters, the noise will almost never disappear, even if the engine has been run at idle to let it warm up.
The only case where the noise might disappear is if the oil in the engine has not been looked after properly and oil sludge has caused the lash adjusters to stick.

Purchased from www.WorkshopManuals.co.uk

www.WorkshopManuals.co.uk

## FUNCTIONAL TEST

1. Start the engine.
2. Check that the noise occurs immediately after the engine is started, and that the noise changes in accordance with changes in the engine speed.
   If the noise does not occur immediately after the engine is started, or if it does not change in accordance with the engine speed, the problem is not being caused by the lash adjusters, so check for some other cause of the problem. Moreover, if the noise does not change in accordance with the engine speed, the cause of the problem is probably not with the engine. (In these cases, the lash adjusters are normal.)
3. While the engine is idling, check that the noise level does not change when the engine load is varied (for example, by shifting from N → D).
   If the noise level changes, the cause of the noise is probably parts striking because of worn crankshaft bearings or connecting rod bearings. (In such cases, the lash adjusters are normal.)
4. After the engine has warmed up, run it at idle and check if any noise can be heard.
   If the noise has become smaller or disappeared, oil sludge could make the lash adjusters stick. Clean the lash adjusters. (Refer to the Engine Workshop Manual.) If not improved, go to step 5.
5. Bleed air from the lash adjusters. (Refer to P.11A-11.)
6. If the noise has not disappeared even after the air bleeding, clean the lash adjusters. (Refer to the Engine Workshop Manual.)

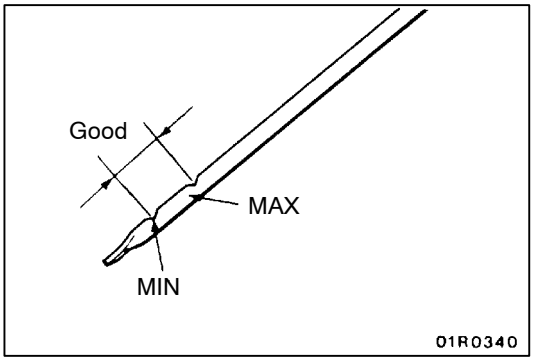


## LASH ADJUSTER AIR BLEEDING

1. Check the engine oil and replenish or replace the oil if necessary.

   NOTE
   (1) If there is a only small amount of oil, air will be drawn in through the oil screen and will get into the oil passage.
   (2) If the amount of oil is greater than normal, then the oil will being mixed by the crankshaft and a large amount of air may get mixed into the oil.
   (3) If the oil is degenerated, air and oil will not separate easily in oil, and the amount of air mixed into the oil will increase.

Purchased from www.WorkshopManuals.co.uk

www.WorkshopManuals.co.uk

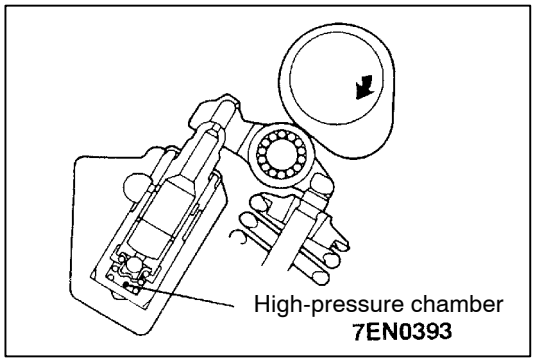


If the air which has been mixed in with the oil due to any of the above reasons gets into the high pressure chamber of the lash adjuster, the air inside the high pressure chamber will be compressed when the valve is open and the lash adjuster will over-compress, resulting in abnormal noise when the valve closes.
This is the same effect as if the valve clearance is adjusted to be too large by mistake. If the air inside the lash adjusters is then released, the operation of the lash adjusters will return to normal.

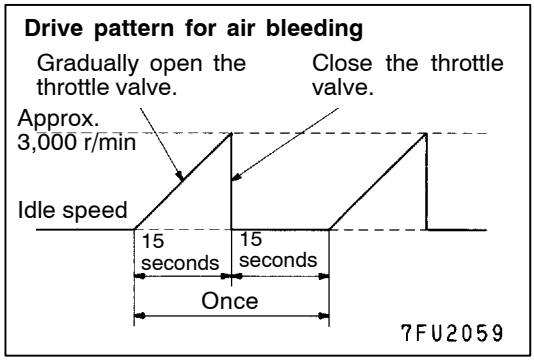


2. Run the engine at idle for 1 - 3 minutes to let it warm up.
3. With no load on the engine, repeat the drive pattern shown in the illustration at left and check if the abnormal noise disappears. (The noise should normally disappear after 10 - 30 repetitions, but if there is no change in the noise level after 30 repetitions or more, the problem is probably not due to air inside the lash adjusters.)
4. After the noise has disappeared, repeat the drive pattern shown in the illustration at left a further 5 times.
5. Run the engine at idle for 1 - 3 minutes and check that the noise has disappeared.

Purchased from www.WorkshopManuals.co.uk

www.WorkshopManuals.co.uk

# OIL PAN AND OIL SCREEN

## REMOVAL AND INSTALLATION

**Pre-removal and Post-installation Operation**
- Skid Plate and Under Cover Removal and Installation
- Engine Oil Draining and Refilling (Refer to GROUP 12 - On-vehicle Service.)
- Starter Assembly Removal and Installation (Refer to GROUP 16 - Starting System.)

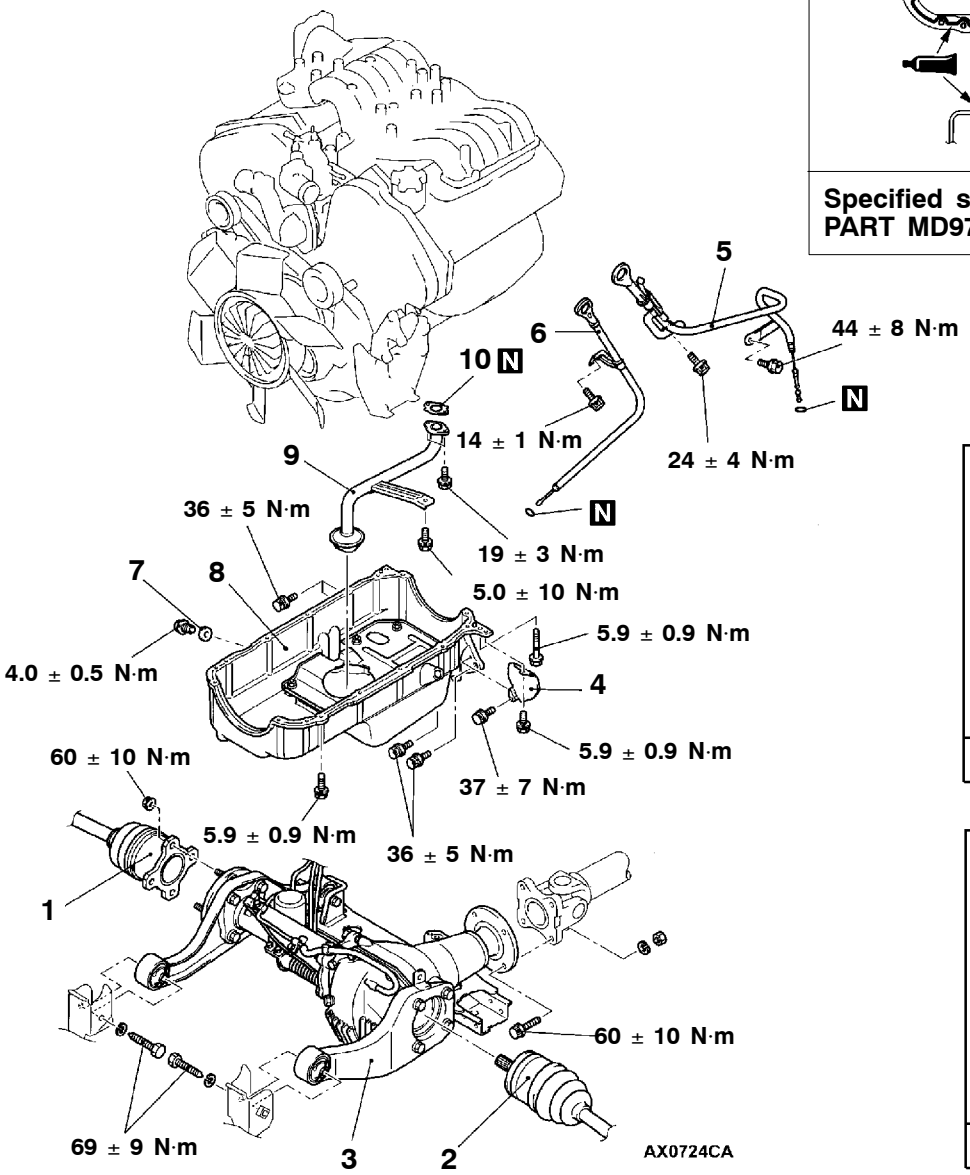


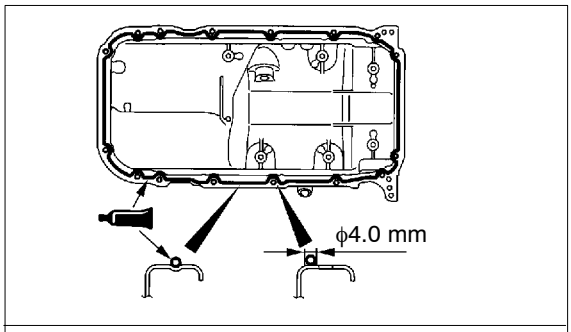


**Specified sealant: MITSUBISHI GENUINE PART MD970389 or equivalent**

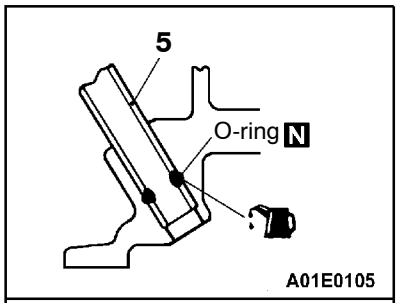


**Transmission fluid**

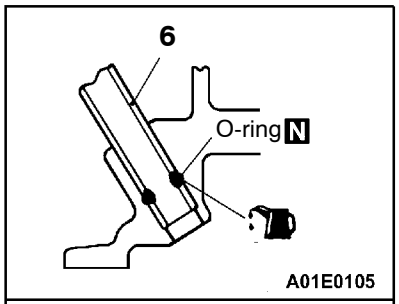


**Engine oil**

**Removal steps**

1. Drive shaft <R.H.>
2. Drive shaft <L.H.>
3. Front differential, No.2 crossmember ◀A▶
4. Cover
5. A/T oil dipstick assembly
6. Engine dipstick assembly
7. Gasket ▶B◀
8. Oil pan ▶A◀
9. Oil screen
10. Gasket

Purchased from www.WorkshopManuals.co.uk

www.WorkshopManuals.co.uk

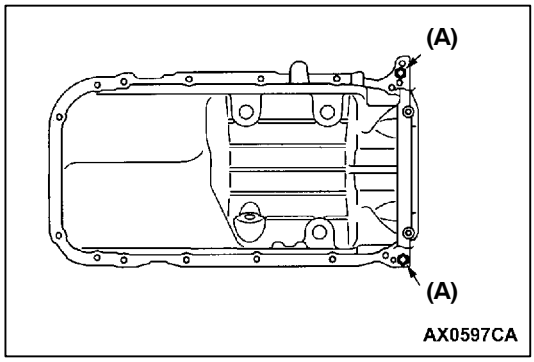


## REMOVAL SERVICE POINT

### ◀A▶ OIL PAN REMOVAL

1. Remove the oil pan installation bolts.

   **Caution**
   **The use of an oil pan remover (MD998727) can damage the oil pan (aluminum made).**

2. Screw the bolts (M10) securing the oil pan to the transmission assembly in the illustrated bolt holes, then remove the oil pan.

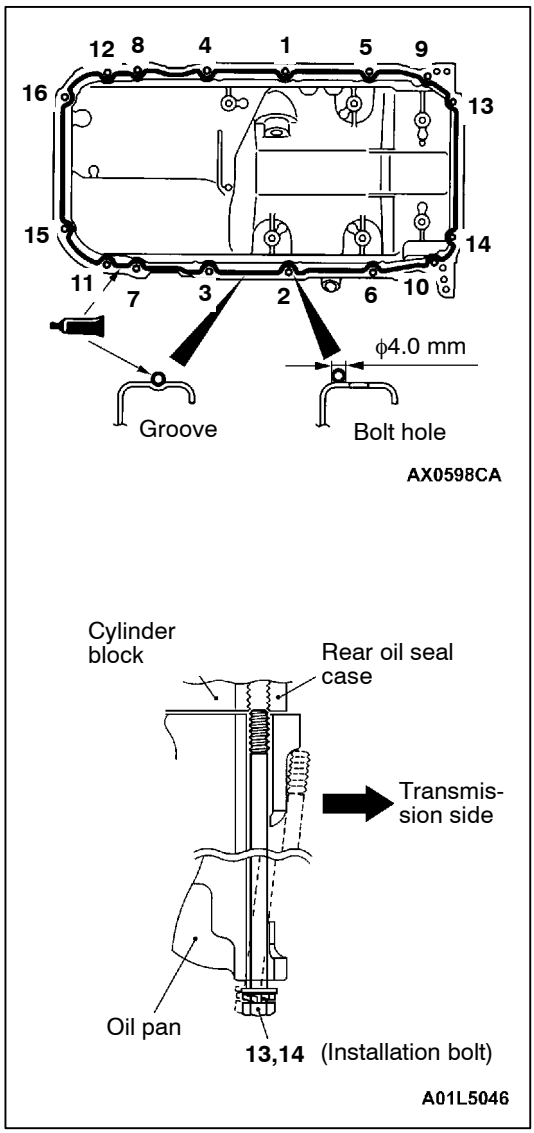


## INSTALLATION SERVICE POINTS

### ▶A◀ OIL PAN INSTALLATION

1. Remove sealant from the oil pan and cylinder block mating surfaces.
2. Degrease the sealant-coated surface and the engine mating surface.
3. Apply MITSUBISHI genuine part number MD970389 or equivalent around the gasket surface of oil pan as specified in the illustration.

   NOTE
   The sealant should be applied in a continuous bead approximately 4.0 mm in diameter.

4. Assemble the oil pan to the cylinder block within 30 minutes after applying the sealant.

   **Caution**
   **The bolt holes for bolts 13 and 14 in the illustration are cut away on the transmission side. Be careful not to insert these bolts at an angle.**

5. Tighten the bolts in order of the numbers shown in the illustration.

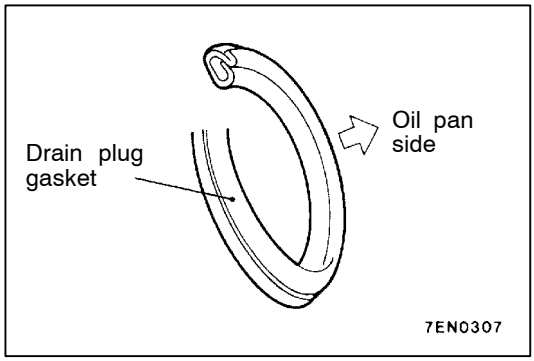


### ▶B◀ DRAIN PLUG GASKET INSTALLATION

Replace the gasket with a new gasket. Install the new gasket in the direction shown in the illustration.

## INSPECTION

- Check the oil pan for cracks.
- Check the oil pan sealant-coated surface for damage and deformation.
- Check the oil screen for cracked, clogged or damaged wire net and pipe.

Purchased from www.WorkshopManuals.co.uk

www.WorkshopManuals.co.uk

# TIMING BELT

## REMOVAL AND INSTALLATION

**Pre-removal Operation**
- Skid Plate and Under Cover Removal and Installation
- Battery abd batterytray Removal and Installation
- Air cleaner assembly Removal and Installation (Refer to GROUP 15)
- Shroud assembly Removal and Installation (Refer to GROUP 14 - Cooling Fan.)
- Engine Coolant Draining and Refilling (Refer to GROUP 14 - On-vehicle Service.)

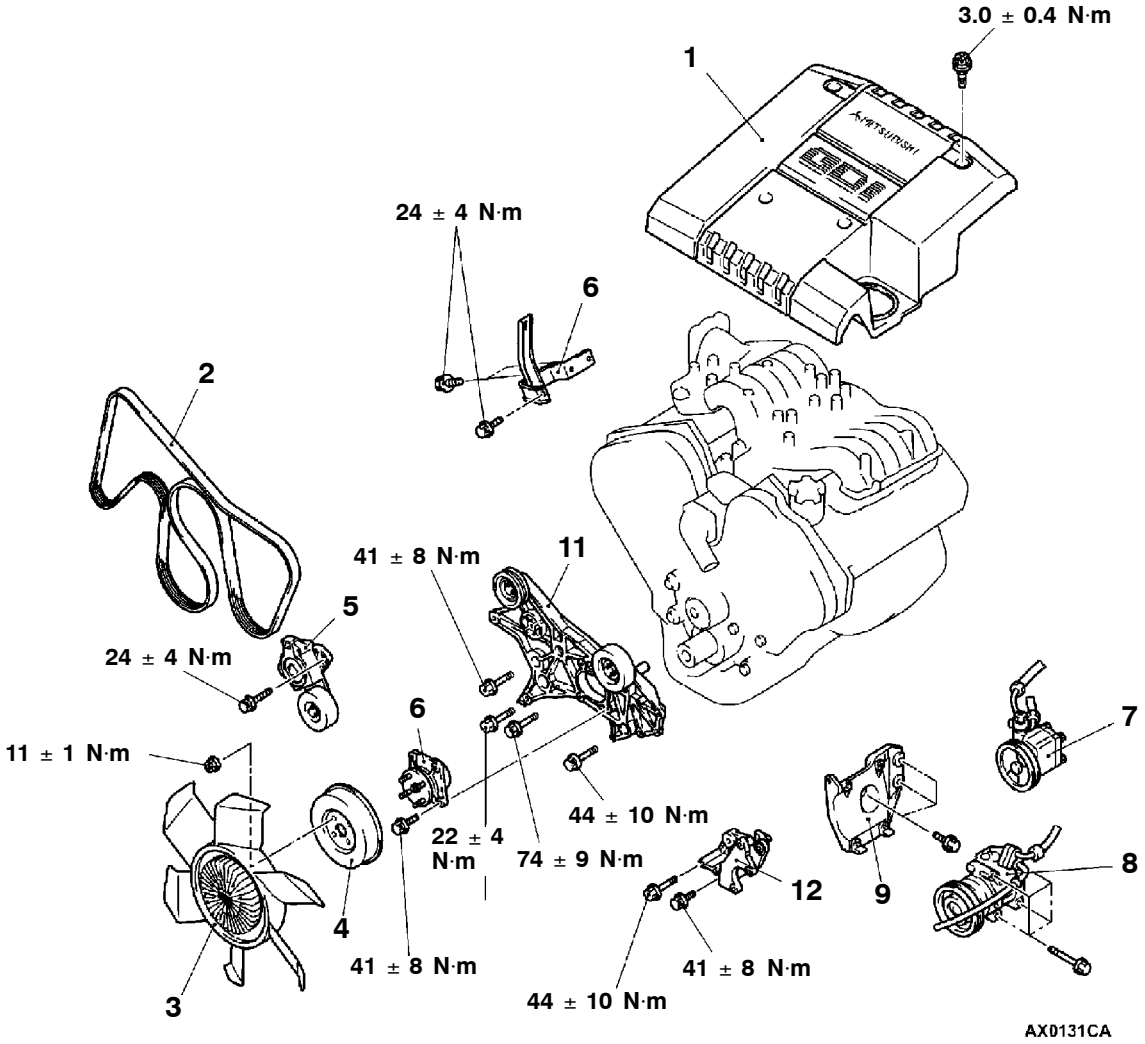


**Removal steps**

▶F◀ 1. Cover
2. Drive belt
3. Cooling fan and fan clutch assembly
4. Cooling fan pulley
◀A▶ ▶E◀ 5. Drive belt auto-tensioner
6. Engine hanger <R.H.>
- Alternator (Refer to Group16.)

◀B▶ 7. Power steering oil pump assembly
◀B▶ 8. A/C compressor assembly
9. Compressor bracket
10. Cooling fan bracket
▶D◀ 11. Accessory mount assembly
12. Power steering oil pump bracket

Purchased from www.WorkshopManuals.co.uk

www.WorkshopManuals.co.uk

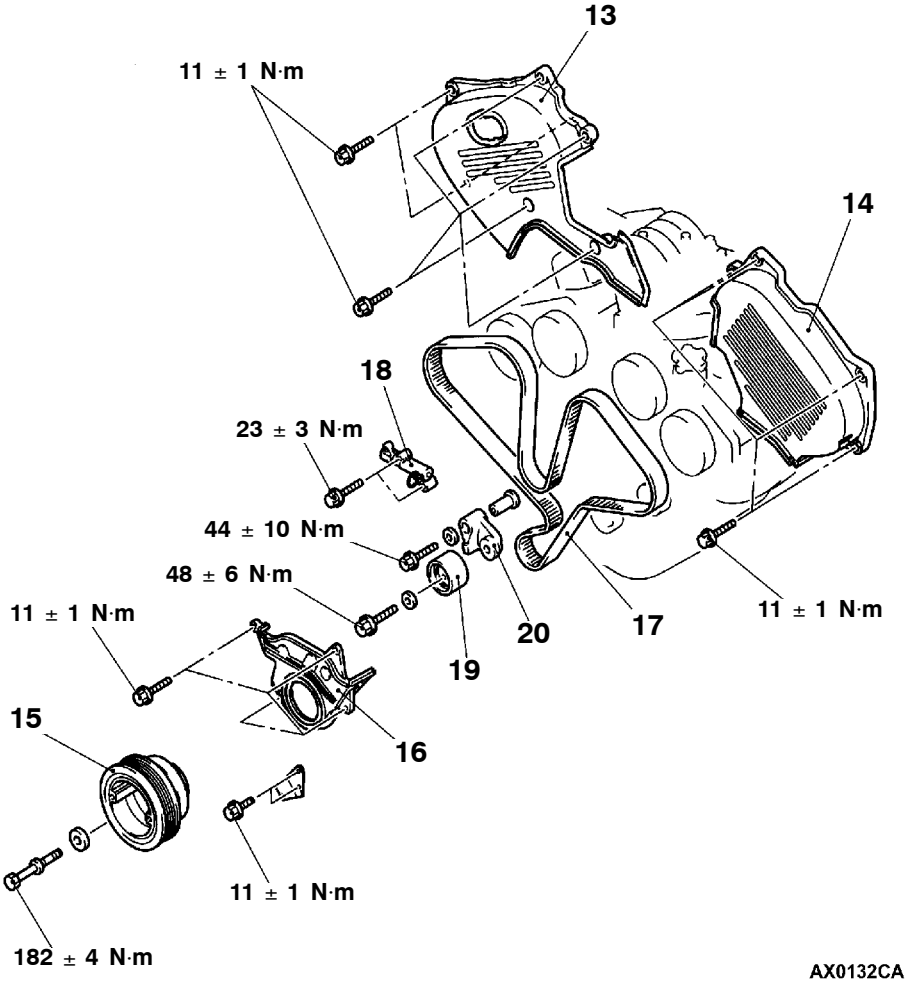


**Removal steps**

13. Timing belt upper cover assembly <R.H.>
14. Timing belt upper cover assembly <L.H.>

◀C▶ ▶C◀ 15. Crankshaft pulley

16. Timing belt lower cover assembly

◀D▶ ▶B◀ 17. Timing belt

▶A◀ 18. Auto-tensioner

19. Tension pulley
20. Tensioner arm assembly

Purchased from www.WorkshopManuals.co.uk

www.WorkshopManuals.co.uk

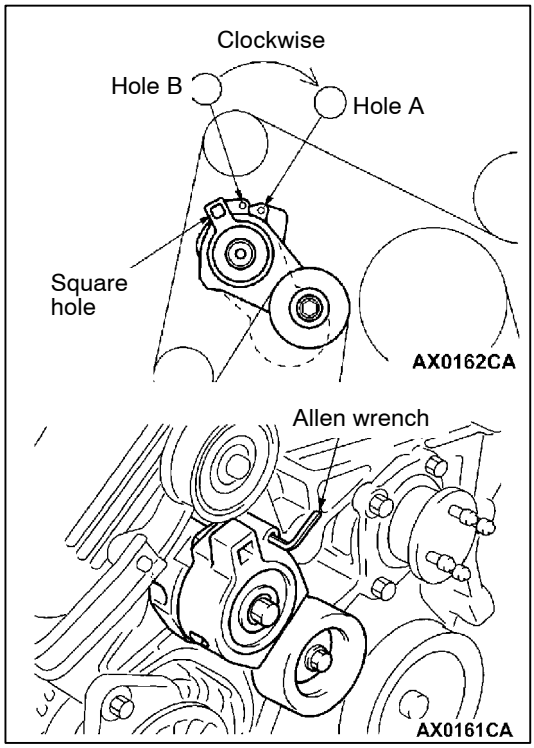


## REMOVAL SERVICE POINTS

### ◀A▶ DRIVE BELT AUTO-TENSIONER REMOVAL

The following operations will be needed due to the introduction of the serpentine drive system with the drive belt auto tensioner.

1. Insert a 12.7 mm spinner handle into the square hole on the drive belt auto tensioner, and rotate it clockwise until the tensioner touches the stopper.
2. Align hole B with hole A, and insert a 5.0 mm Allen wrench to hold the tensioner. Then loosen the drive belt, and then remove the drive belt auto tensioner.

### ◀B▶ POWER STEERING OIL PUMP ASSEMBLY/A/C COMPRESSOR ASSEMBLY REMOVAL

1. Do not disconnect the hoses to remove the pump and compressor.
2. Support the removed pump and compressor with a wire, etc. so that they will not get in the way while working.

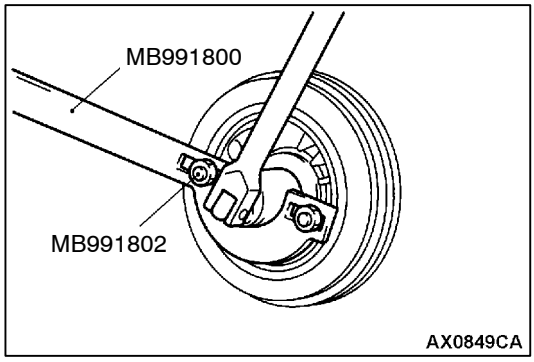


### ◀C▶ CRANKSHAFT PULLEY REMOVAL

Use special tools to remove the crankshaft pulley from the crankshaft.

Purchased from www.WorkshopManuals.co.uk

www.WorkshopManuals.co.uk

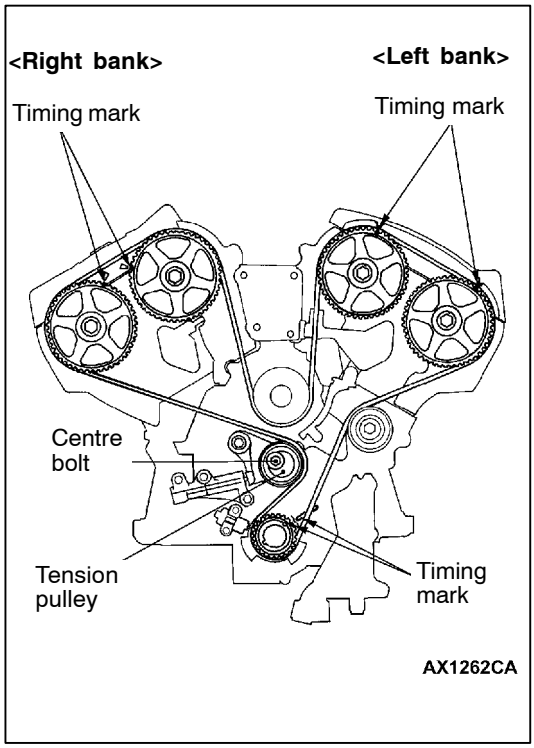


### ◀D▶ TIMING BELT REMOVAL

1. Turn the crankshaft clockwise to align each timing mark and to set the No. 1 cylinder to compression top dead centre.

   **Caution**
   **(1) The camshaft sprocket (right side) can turn easily due to the valve spring force applied, so be careful not to get your fingers caught.**
   **(2) Never turn the crankshaft anticlockwise.**

2. If the timing belt is to be reused, chalk mark the flat side of the belt with an arrow indicating the clockwise direction.
3. Loosen the centre bolt of the tension pulley, and then remove the timing belt.

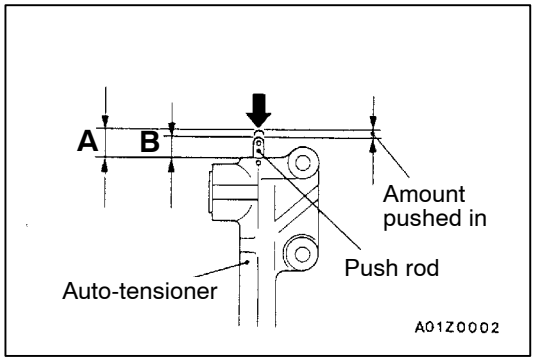


## INSTALLATION SERVICE POINTS

### ▶A◀ AUTO-TENSIONER INSTALLATION

1. While holding the auto-tensioner by hand, press the end of the push rod against a metal surface (such as the cylinder block) with a force of 98 - 196 Nm and measure how far the push rod is pushed in.

   **Standard value: Within 1 mm**
   **A: Length when no force is applied**
   **B: Length when force is applied**
   **A - B: Amount pushed in**

2. If it is not within the standard value, replace the auto-tensioner.

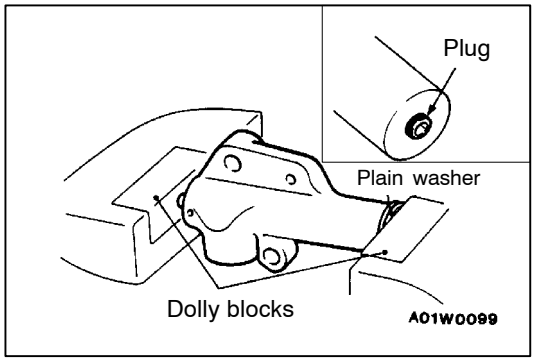


3. Place two dolly blocks in a vice as shown in the illustration, and then place the auto-tensioner in the vice.

   **Caution**
   **(1) Place the auto-tensioner perpendicular to the jaws of the vice.**
   **(2) If there is a plug at the base of the auto-tensioner, insert a plain washer onto the end of the auto-tensioner to protect the plug.**

Purchased from www.WorkshopManuals.co.uk

www.WorkshopManuals.co.uk

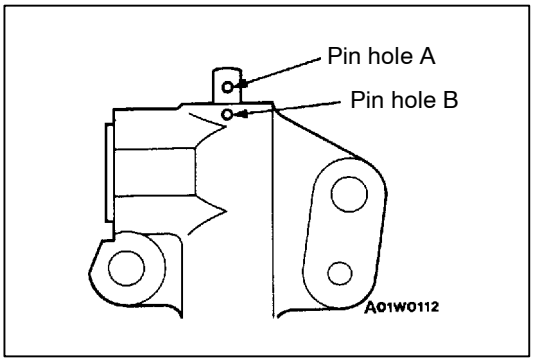


4. Slowly compress the push rod of the auto-tensioner until pin hole A in the push rod is aligned with pin hole B in the cylinder.

   **Caution**
   **Never compress the push rod too fast, or the push rod may be damaged.**

5. Insert the setting pin into the pin holes once they are aligned.

   NOTE
   If replacing the auto-tensioner, the pin will already be inserted into the pin holes of the new part.

6. Install the auto-tensioner to the engine.

   **Caution**
   **Do not remove the setting pin from the auto-tensioner.**

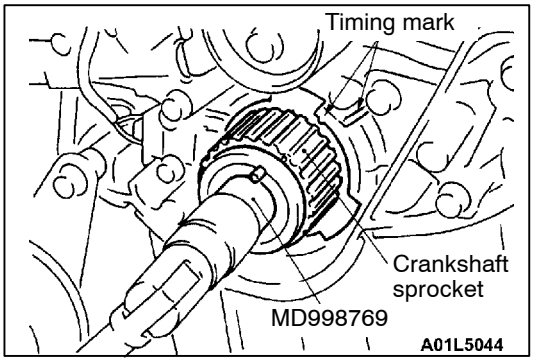


**▶B◀ TIMING BELT INSTALLATION**

1. Use special tool to align the timing marks on the crankshaft sprocket.

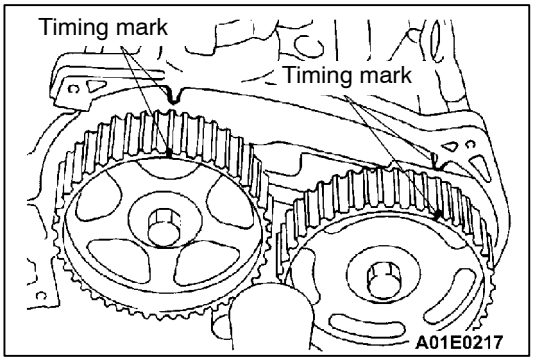


2. Align the timing marks on the right bank side crankshaft sprocket.

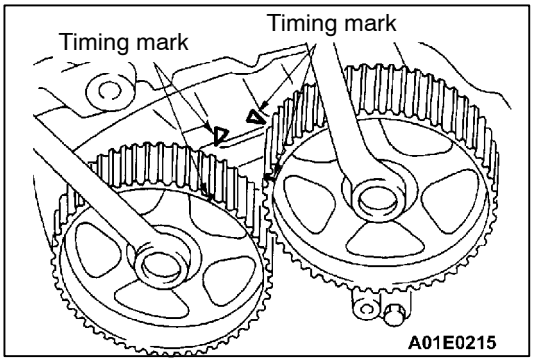


3. Align the timing marks on the left bank side crankshaft sprocket, and then hold the sprocket with a wrench as shown.

   **Caution**
   **(1) The left bank side camshaft sprockets will turn readily because of the spring force being applied, so be careful not to get your fingers caught.**

Purchased from www.WorkshopManuals.co.uk

www.WorkshopManuals.co.uk

**(2) If the sprocket on one side of the left bank is turned one full revolution while the sprocket timing marks on the opposite side of the left bank are aligned, the intake and exhaust valves will interfere.**

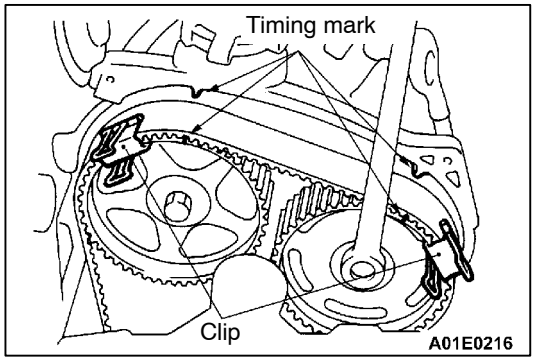


4. Set the timing belt onto the crankshaftsprocket.
5. Set the timing belt onto the idler pulley.
6. Check that the timing marks of the left bank side exhaust camshaft sprocket is aligned, and clamp the timing belt with a clip.
7. Set the timing belt onto the water pump pulley.

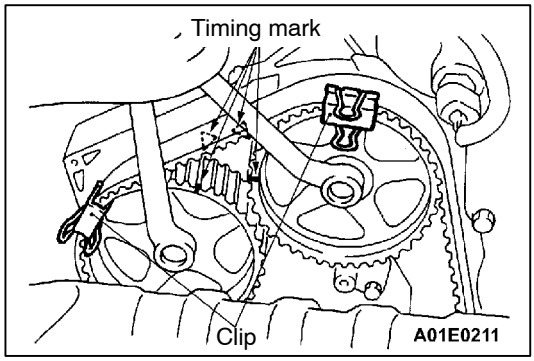


8. Check that the timing marks of the right bank side exhaust camshaft sprocket is aligned, and clamp the timing belt with a clip.
9. Set the timing belt onto the tension pulley.

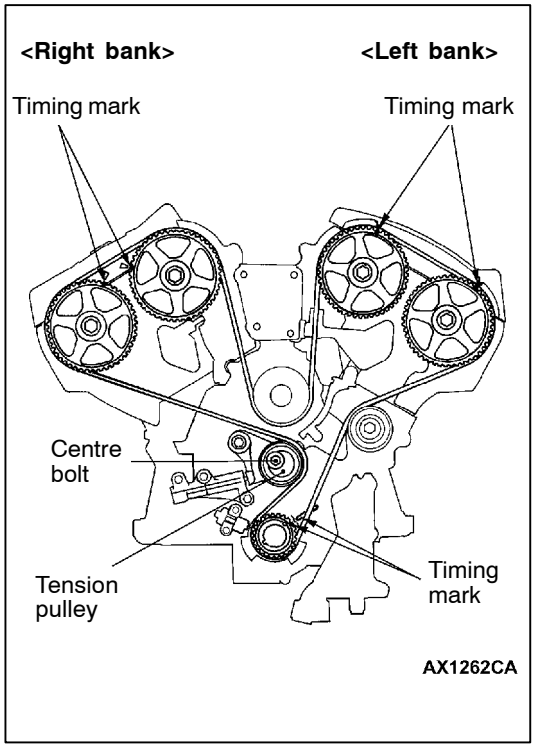


10. Turn the right bank side camsahft sprocket (exhaust side) anticlockwise unitl the tension side of the timing belt is firmaly stretched. Check all timing marks again.

Purchased from www.WorkshopManuals.co.uk

www.WorkshopManuals.co.uk

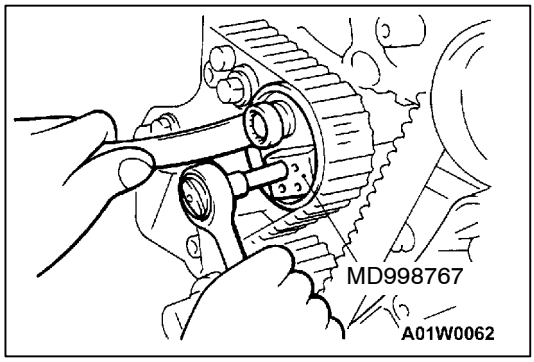


11. Use special tool to push the tensioner pulley into the timing belt, and then temporarily tighten the centre bolt.
12. Loosen all the clips.

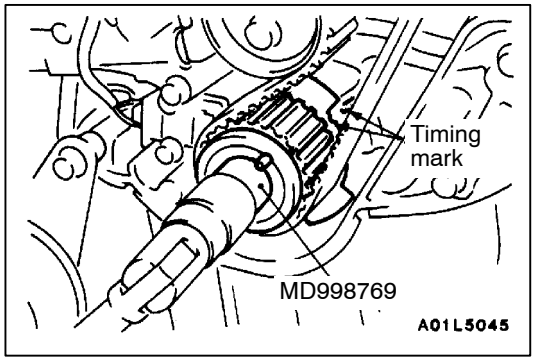


13. Use special tool to turn the crankshaft 1/4 turn anticlockwise and then turn it again clockwise until the timing marks are aligned.

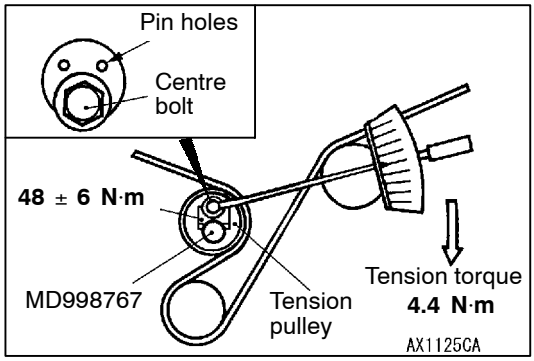


14. Loosen the centre bolt of the tensioner pulley. Use special tool and a torque wrench to apply the standard torque to the timing belt as shown in the illustration. Then tighten the centre bolt to the specified torque.

    **Standard value: 4.4 N·m**
    **<Timing belt tension torque>**

    **Caution**
    **When tightening the centre bolt, be careful that the tensioner pulley does not turn with the bolt.**

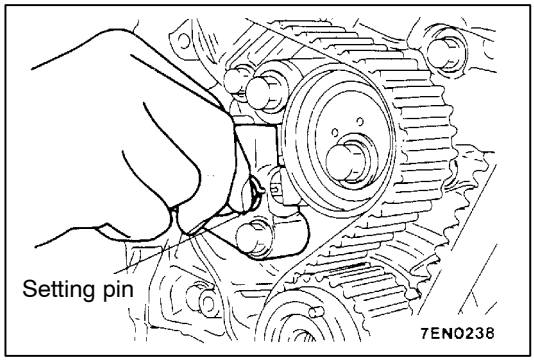


15. Remove the setting pin that has been inserted into the auto-tensioner.
16. Turn the crankshaft two turns clockwise to align the timing marks.

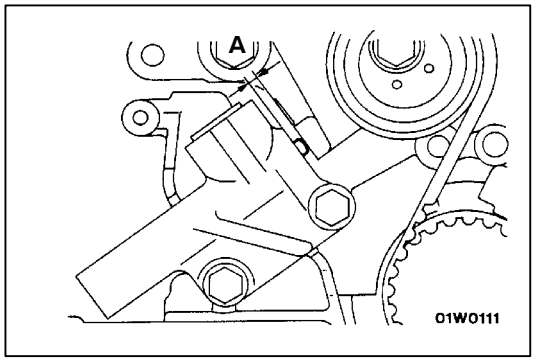


17. Wait for at least five minutes, and then check that the auto-tensioner pushrod extends within the standard value.

    **Standard value (A): 3.8 - 5.0 mm**

18. If no, repeat the operation in steps (13) to (17) above.
19. Check again that the timing marks of each sprocket are aligned.

Purchased from www.WorkshopManuals.co.uk

www.WorkshopManuals.co.uk

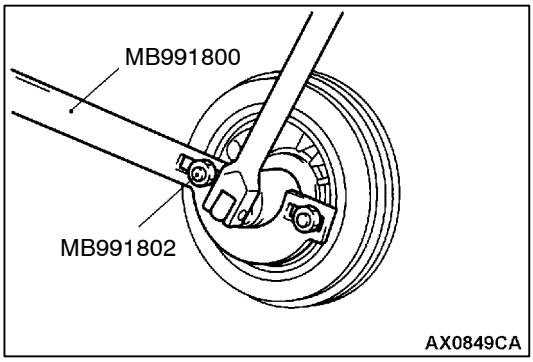


### ▶C◀ CRANKSHAFT PULLEY INSTALLATION

Use special tools MD991800 and MB991802 to install the crankshaft pulley.

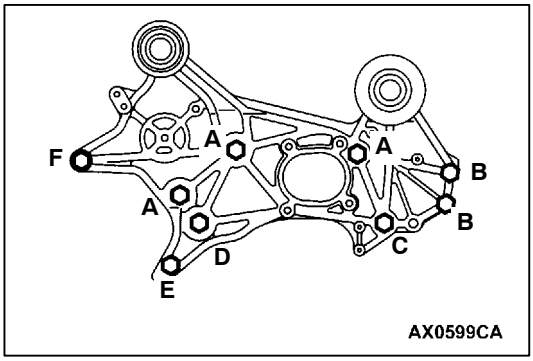


### ▶D◀ ACCESSORY MOUNT ASSEMBLY INSTALLATION

Install the bolts to the shown positions, and tighten them to the specified torque.

| Bolt (symbol) | Diameter × length mm | Tightening torque(N·m) |
|---|---|---|
| A | 10×100 | 41 ± 8 |
| B | 10×30 | 41 ± 8 |
| C | 10×100 | 44 ± 10 |
| D | 12×100 | 74 ± 9 |
| E | 8×30 | 22 ± 4 |
| F | 10×106 | 44 ± 10 |

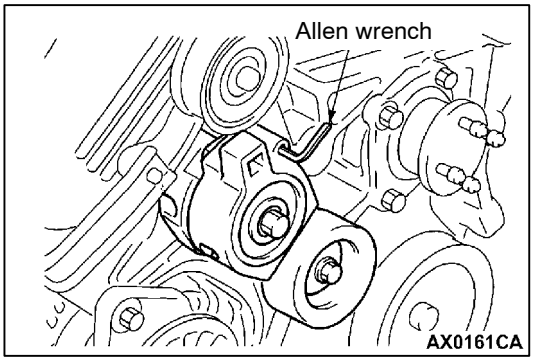


### ▶E◀ DRIVE BELT AUTO TENSIONER INSTALLATION

1. Install the drive belt auto tensioner with the Allen wrench inserted.
2. After the drive belt has been installed, remove the Allen wrench while holding the drive belt auto tensioner with a socket wrench drive. Then release the drive belt auto tensioner slowly.

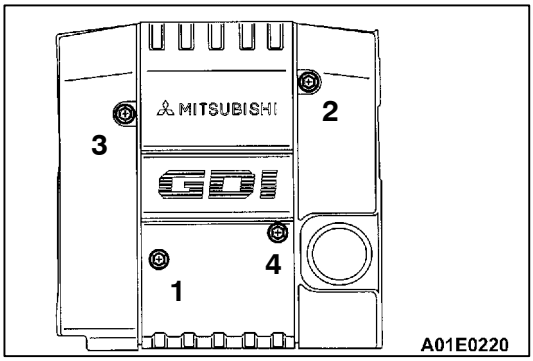


### ▶F◀ ENGINE COVER INSTALLATION

Install the engine cover bolts finger-tight, and tighten them to the specified torque in the order shown.

**Tightening torque: 3.0 ± 0.4 N·m**

Purchased from www.WorkshopManuals.co.uk

www.WorkshopManuals.co.uk

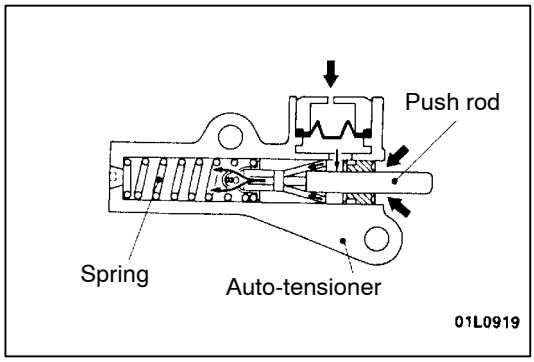


## INSPECTION

### AUTO-TENSIONER

- Check the auto-tensioner for possible leaks.
- Check the push rod for cracks.

# CRANKSHAFT OIL SEAL

## REMOVAL AND INSTALLATION

**Pre-removal and Post-installation Operation**
- Timing Belt Removal and Installation (Refer to P.11A-15.)

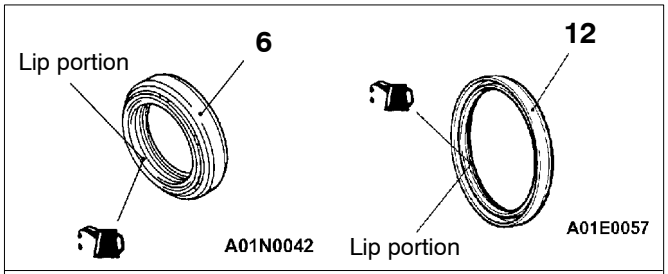


**Engine oil**

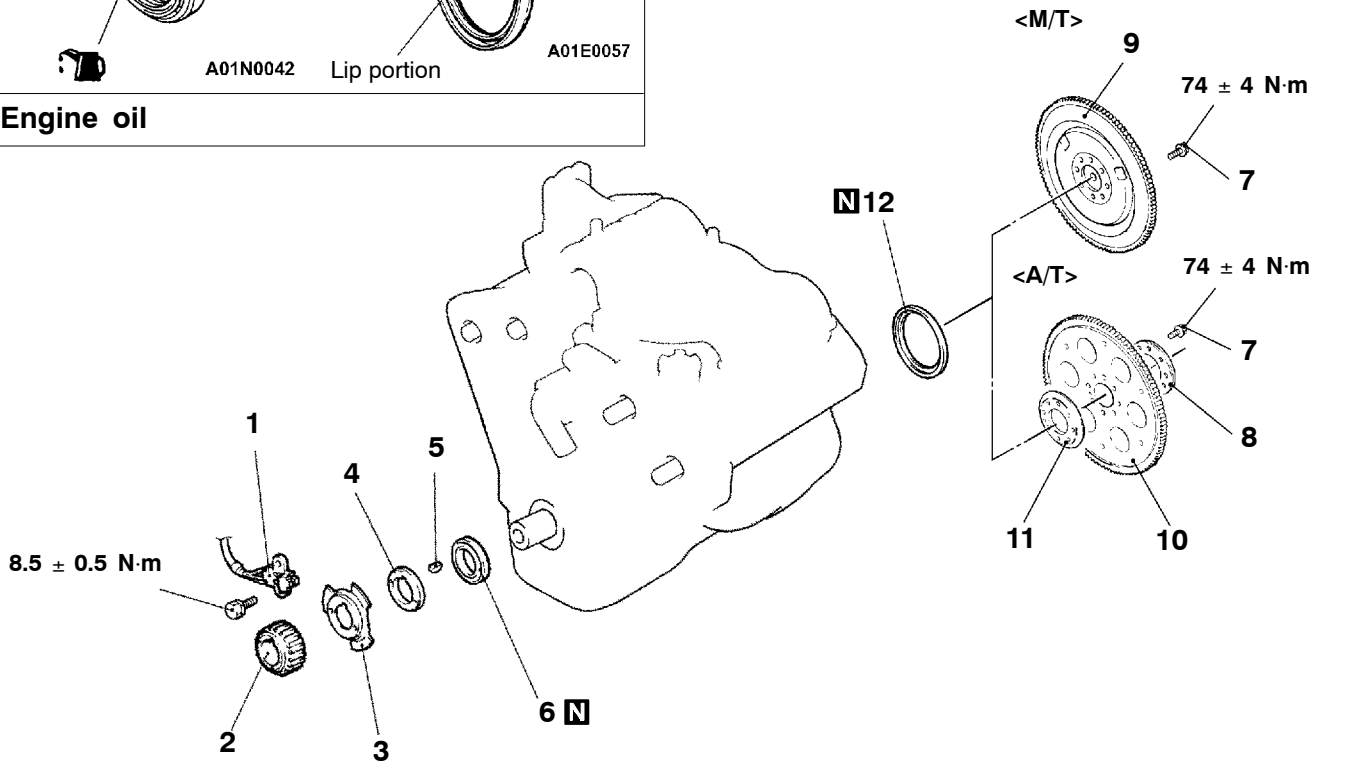


**Removal steps**

1. Crank angle sensor
▶D◀ 2. Crankshaft sprocket
▶D◀ 3. Crankshaft sensing blade
▶D◀ 4. Crankshaft spacer
5. Key
▶C◀ 6. Crankshaft front oil seal
◀A▶ ▶B◀ 7. Bolt
8. Adaptor plate
9. Flywheel
10. Drive plate
11. Crankshaft adaptor
▶A◀ 12. Crankshaft rear oil seal

Purchased from www.WorkshopManuals.co.uk

www.WorkshopManuals.co.uk

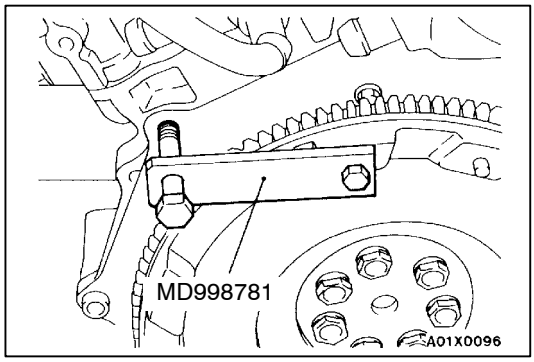


## REMOVAL SERVICE POINT

### ◀A▶ BOLT REMOVAL

Use special tool to secure the flywheel or drive plate and remove the bolt.

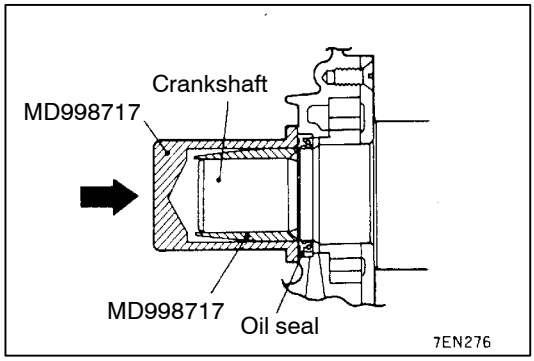


## INSTALLATION SERVICE POINTS

### ▶A◀ CRANKSHAFT REAR OIL SEAL INSTALLATION

1. Apply a small amount of engine oil to the entire circumference of the oil seal lip.
2. Use special tool to tap in the oil seal as shown in the illustration.

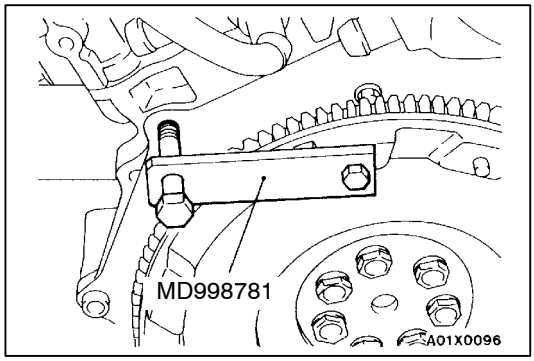


### ▶B◀ BOLT INSTALLATION

Use special tool in the same way as during removal to install the bolt.

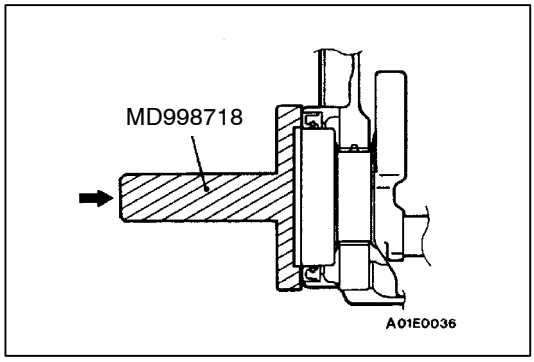


### ▶C◀ CRANKSHAFT FRONT OIL SEAL INSTALLATION

1. Apply a small amount of engine oil to the oil seal lip and then insert.
2. Using special tool, tap the oil seal into the front case.

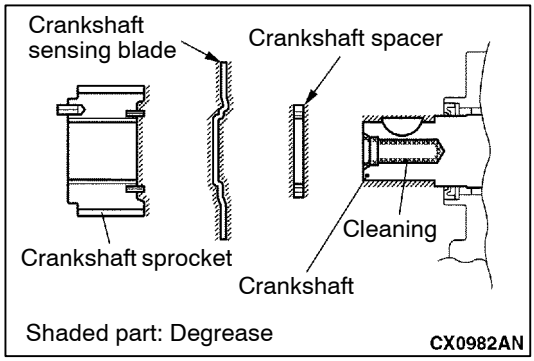


### ▶D◀ CRANKSHAFT SPACER/CRANKSHAFT SENSING BLADE/CRANKSHAFT SPROCKET

To prevent the crankshaft pulley mounting bolt from loosening, degrease or clean the crankshaft, the crankshaft spacer, the crankshaft sensing blade and the crankshaft at the shown positions.

Purchased from www.WorkshopManuals.co.uk

www.WorkshopManuals.co.uk

# CAMSHAFT OIL SEAL

## REMOVAL AND INSTALLATION

**Pre-removal and Post-installation Operation**
- Timing Belt Removal and Installation (Refer to P.11A-15.)

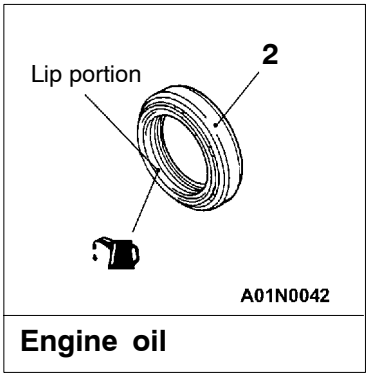


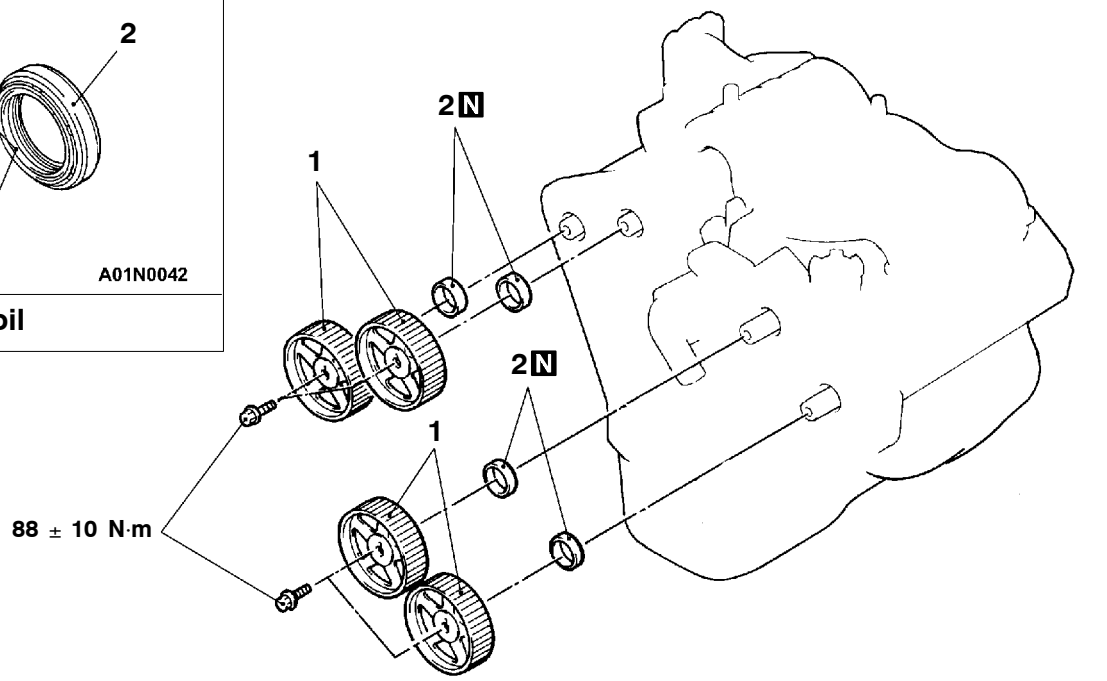


A01E0195

**Removal steps**

◀A▶ ▶B◀ 1. Camshaft sprocket
◀B▶ ▶A◀ 2. Camshaft oil seal

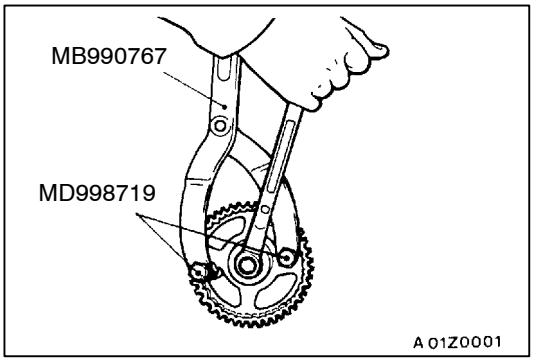


## REMOVAL SERVICE POINTS

### ◀A▶ CAMSHAFT SPROCKET REMOVAL

Use special tools to remove the camshaft sprocket.

Purchased from www.WorkshopManuals.co.uk

www.WorkshopManuals.co.uk

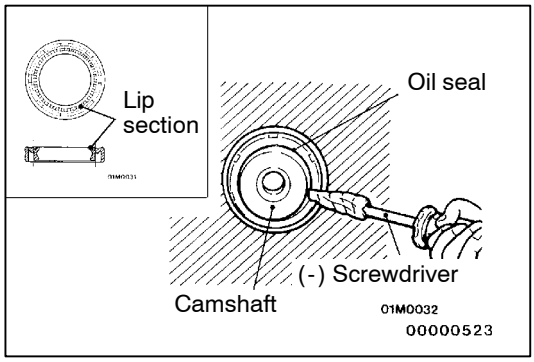


### ◀B▶ CAMSHAFT OIL SEAL REMOVAL

1. Make a notch in the oil seal lip section with a knife, etc.
2. Cover the end of a flat-tipped screwdriver with a shop towel and insert into the notched section of the oil seal, and pry out the oil seal to remove it.

**Caution**
**Be careful not to damage the camshaft and the cylinder head.**

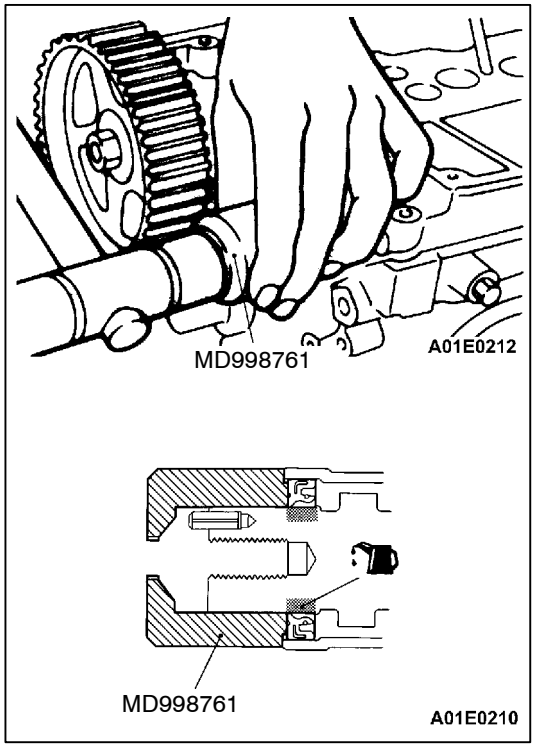


## INSTALLATION SERVICE POINTS

### ▶A◀ CAMSHAFT OIL SEAL INSTALLATION

1. Apply engine oil to the camshaft oil seal lip.
2. Use special tools to press-fit the camshaft oil seal.

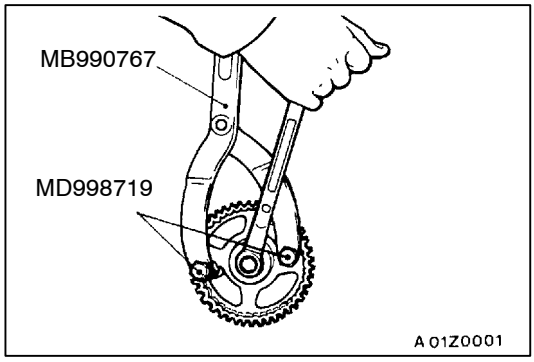


### ▶B◀ CAMSHAFT SPROCKET INSTALLATION

Use special tools in the same way as during removal to install the camshaft sprocket.

Purchased from www.WorkshopManuals.co.uk

www.WorkshopManuals.co.uk

# CYLINDER HEAD GASKET

## REMOVAL AND INSTALLATION

**Pre-removal and Post-installation Operation**
- Fuel Discharge Prevention (Pre-removal operation)
- Engine Coolant Draining and Refilling (Refer to GROUP 14 - On-vehicle Service.)
- Engine Oil Draining and Refilling (Refer to GROUP 12 - On-vehicle Service.)
- Front Exhaust Pipe Removal and Installation (Refer to GROUP 15 - Exhaust Pipe and Main Muffler.)
- Timing Belt Removal and installation (Refer to P.11A-15.)
- Thermostat Case and Water Inlet Fittng Removal and Installation (Refer to GROUP 14 - Water Pump.)
- Intake Manifold Removal and Installation (Refer to GROUP 15 - Intake Manifold.)
- Fuel Pump (High Pressure) Removal and Installation (Refer to GROUP 13.)

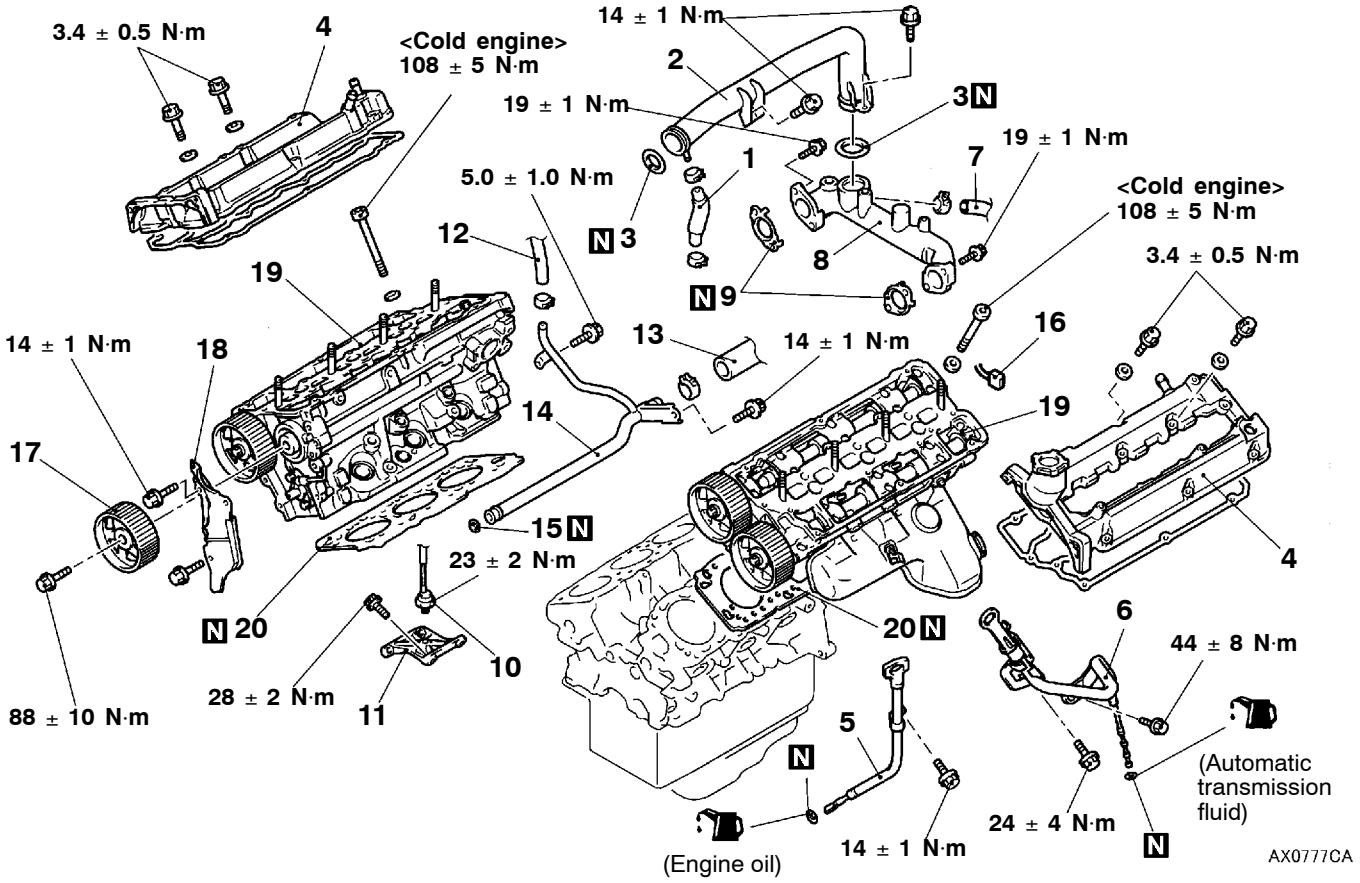


**Removal steps**

1. Water hose
2. Water outlet pipe assembly
3. ▶C◀ O-ring
4. Rocker cover
5. Oil dipstick assembly <when removing left bank only>
6. A/T Fluid dipstick assembly <when removing left bank only>
7. Heater hose connection
8. ▶E◀ Water passage assembly
9. ▶E◀ Gasket
10. ◀A▶ ▶D◀ Detonation sensor
11. Detonation sensor bracket
12. Water hose connection
13. Heater hose connection
14. Water pipe assembly
15. ▶C◀ O-ring
16. Camshaft position sensor connector <when removing left bank only>
17. Camshaft sprocket (Intake side) <when removing right bank only>
18. Timing belt rear cover <when removing right bank only>
19. ◀B▶ ▶B◀ Cylinder head assembly
20. ▶A◀ Cylinder head gasket

Purchased from www.WorkshopManuals.co.uk

www.WorkshopManuals.co.uk

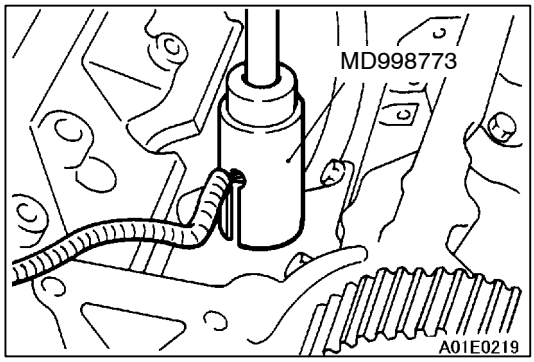


## REMOVAL SERVICE POINTS

### ◀A▶ DETONATION SENSOR REMOVAL

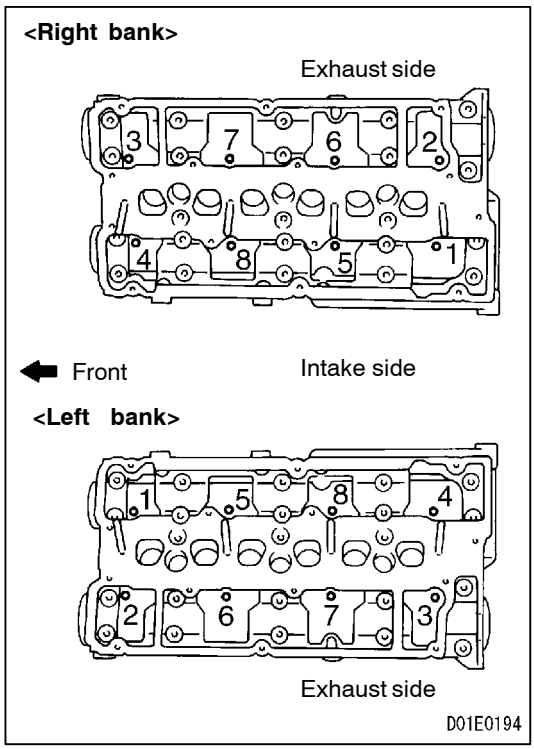


### ◀B▶ CYLINDER HEAD ASSEMBLY REMOVAL

Loosen the bolts in 2 or 3 steps in order of the numbers shown in the illustration, and remove the cylinder head bolt.

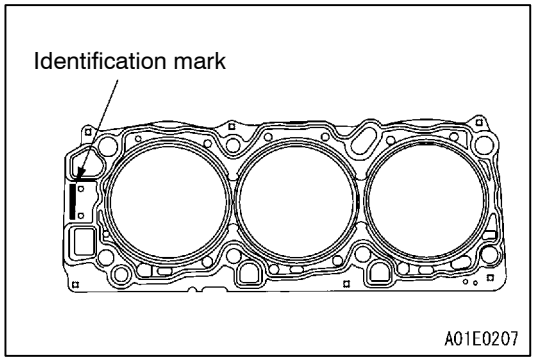


## IINSTALLATION SERVICE POINTS

### ▶A◀ CYLINDER HEAD GASKET INSTALLATION

1. Degrease the cylinder head and cylinder block gasket mounting surfaces.
2. Make sure that the gasket has the proper identification mark for the engine.
3. Lay the cylinder head gasket on the cylinder block with the identification mark at the front top.

Purchased from www.WorkshopManuals.co.uk

www.WorkshopManuals.co.uk

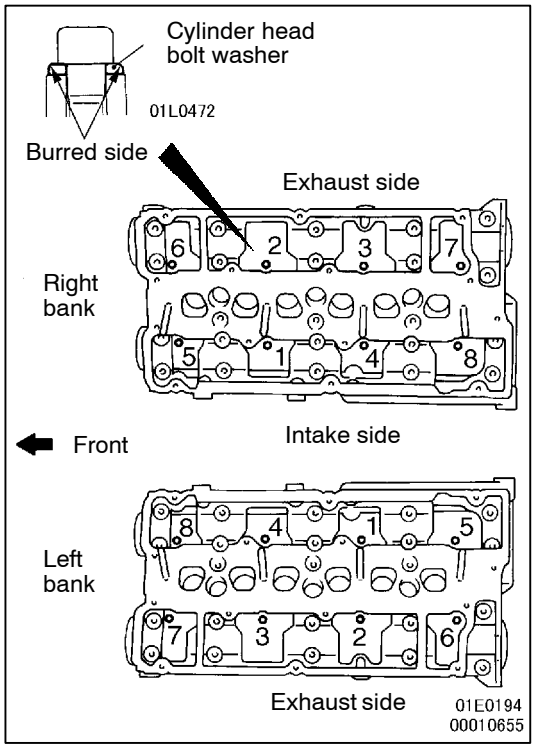


## ▶B◀ CYLINDER HEAD ASSEMBLY INSTALLATION

Tighten the bolts in 2 or 3 steps in order of the numbers shown in the illustration, and install the cylinder head bolt.

**Caution**
**Install the head bolt washers with the beveled side facing upwards as shown in the illustration.**

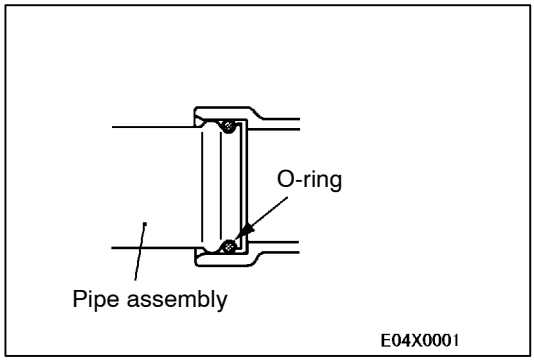


## ▶C◀ O-RING INSTALLATION

Insert the O-ring to the water inlet pipe assembly and coat the outer circumference of the O-ring with water.

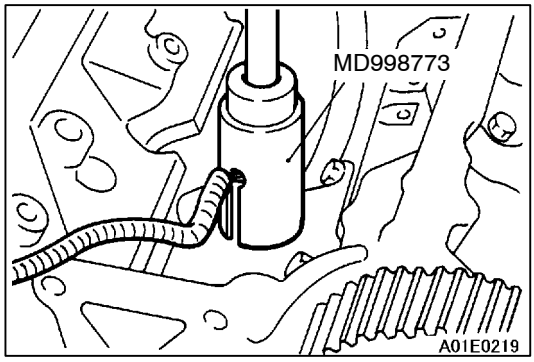


## ▶D◀ DETONATION SENSOR INSTALLATION

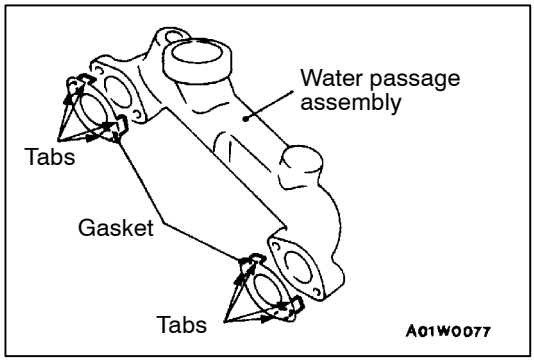


## ▶E◀ GASKET/WATER PASSAGE ASSEMBLY INSTALLATION

Bend the tabs onto the water passage assembly. Then install the water passage assembly to the cylinder head so that the gasket doesn't slip.

Purchased from www.WorkshopManuals.co.uk

www.WorkshopManuals.co.uk

# ENGINE ASSEMBLY

## REMOVAL AND INSTALLATION

**Caution**

***: Indicates parts which should be initially tightened, and then fully tightened after placing the vehicle horizontally and loading the full weight of the engine on the vehicle body.**

**Pre-removal and Post-installation Operation**

- Hood Removal and Installation (Refer to GROUP 42 - Hood.)
- Skid Plate and Under Cover Removal and Installation
- Fuel Discharge Prevention (Pre-removal operation)
- Engine Coolant Draining and Refilling (Refer to GROUP 14 - On-vehicle Service.)
- Air Cleaner and Air Intake Hose Removal and Installation (Refer to GROUP 15 - Air Cleaner.)
- Battery, Battery Tray and Bracket Removal and Installation
- Radiator Removal and Installation (Refer to GROUP 14 - Radiator.)
- Engine Oil Draining and Refilling (Refer to GROUP 12 - On-vehicle Service.)
- Front Exhaust Pipe Removal (Refer to GROUP 15 - Exhaust Pipe and Main Muffler.)
- Transmission Assembly Removal and Installation (Refer to GROUP 22,23 - Transmission Assembly.)

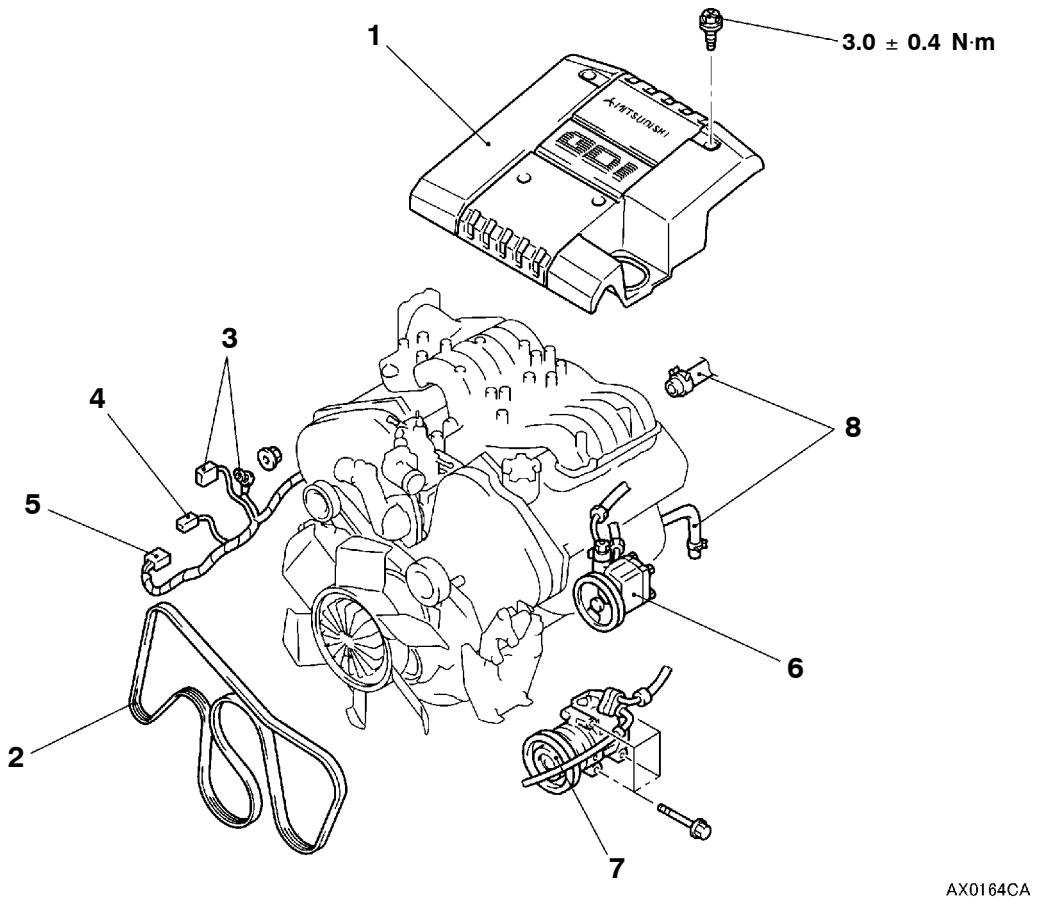


**Removal steps**

▶B◀ 1. Engine cover
2. Drive belt
3. Alternator connector
4. Starter motor connector
◀A▶ 5. Freewheel engage switch connector
◀A▶ 6. Power steering oil pump assembly
7. A/C compressure assembly
8. Heater hose connection

Purchased from www.WorkshopManuals.co.uk

www.WorkshopManuals.co.uk

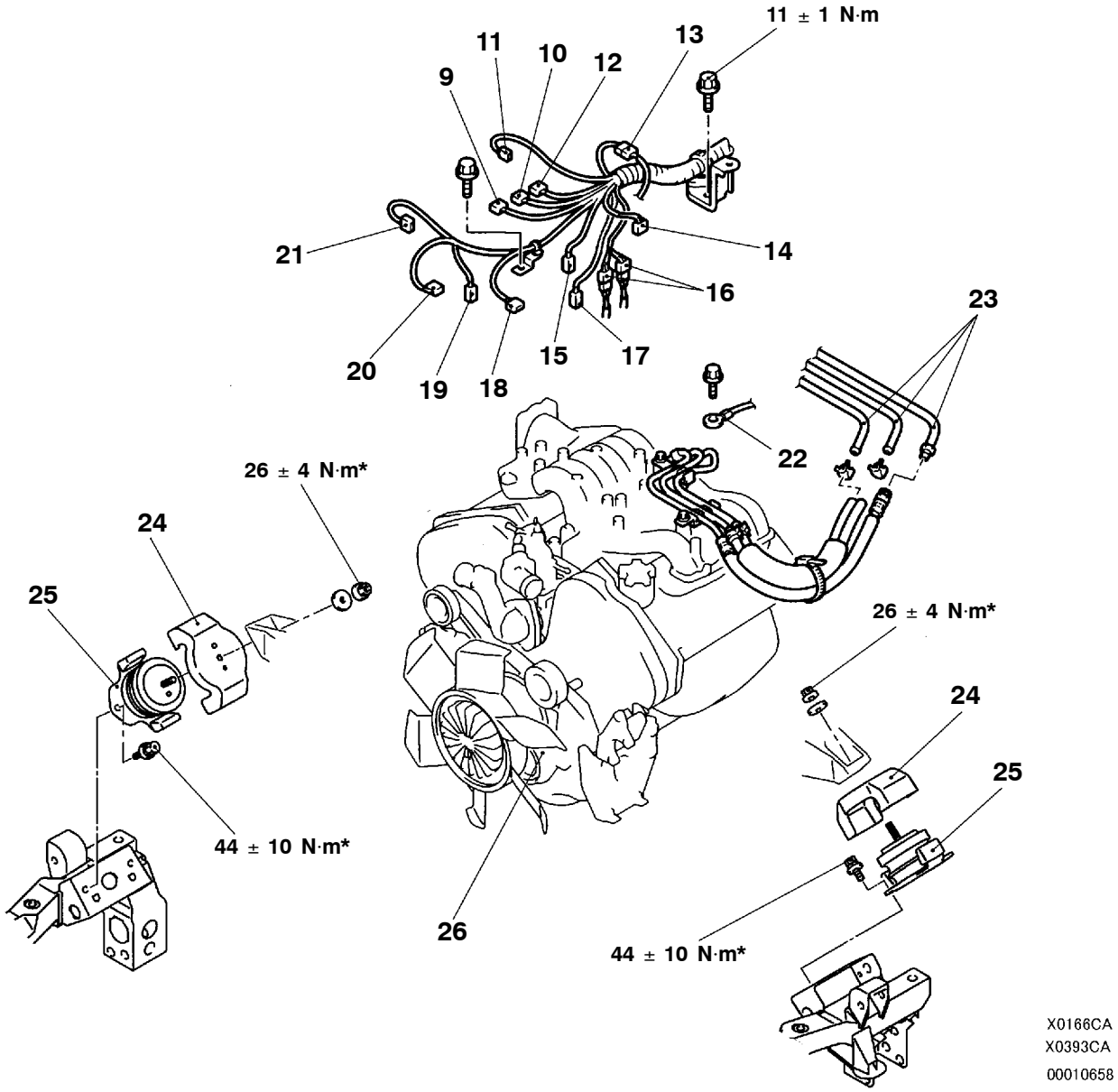


9. Ignition failure sensor connector
10. Detonation sensor connector
11. Throttle position sensor connector
12. Control wiring harness and injector wiring harness connection
13. Control wiring harness and ignition wiring harness connection
14. Fuel pressure sensor harness, camshaft position sensor harness and control wiring harness injector wiring harness connection
15. Purge control solenoid valve connector
16. Control wiring harness and battery cable connection
17. Oxygen sensor connector
18. Crank angle sensor connector
19. Engine coolant temperature gauge unit connector
20. Engine coolant temperature sensor connector
21. Throttle valve control servo connector
22. Battery cable connection
23. Fuel pipe and hose connection
24. Heat protector
25. Engine front mount insulator
26. Engine assembly

◀B▶ ▶A◀

Purchased from www.WorkshopManuals.co.uk

www.WorkshopManuals.co.uk

## REMOVAL SERVICE POINTS

### ◀A▶ POWER STEERING OIL PUMP ASSEMBLY AND A/C COMPRESSOR ASSEMBLY REMOVAL

1. Remove the oil pump and A/C compressor (with the hose attached).
2. Suspend the removed oil pump (by using wire or similar material) at a place where no damage will be caused during removal/installation of the engine assembly.

### ◀B▶ ENGINE ASSEMBLY REMOVAL

1. Check that all cables, hoses, harness connectors, etc. are disconnected from the engine.
2. Lift the special tool (MB991683) and chain block slowly to remove the engine assembly upward from the engine compartment.

## INSTALLATION SERVICE POINT

### ▶A◀ ENGINE ASSEMBLY INSTALLATION

Install the engine assembly. When doing so, check carefully that all pipes and hoses are connected, and that none are twisted, damaged, etc.

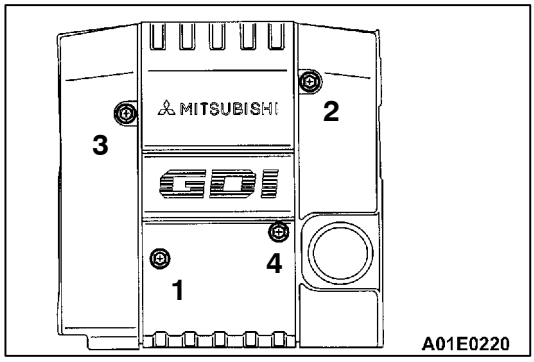


### ▶B◀ ENGINE COVER INSTALLATION

Install the engine cover bolts finger-tight, and tighten them to the specified torque in the order shown.

**Tightening torque: 3.0 ± 0.4 N·m**

Purchased from www.WorkshopManuals.co.uk

www.WorkshopManuals.co.uk

# ENGINE <4D5>

**Click on the applicable bookmark to selected the required model year.**

Purchased from www.WorkshopManuals.co.uk

www.WorkshopManuals.co.uk


# ENGINE <4D5>

## CONTENTS


**GENERAL INFORMATION** . . . . . 2

**SERVICE SPECIFICATIONS** . . . . . 3

**SEALANTS** . . . . . 3

**SPECIAL TOOLS** . . . . . 4

**ON-VEHICLE SERVICE** . . . . . 5

- Drive Belt Tension Check and Adjustment . . . . . 5
- Auto-tensioner check . . . . . 7
- Valve Clearance Check and Adjustment . . . . . 8
- Injection Timing Check and Adjustment . . . . . 9
- Idle Speed Check and Adjustment . . . . . 12
- Idle-up Mechanism Check and Adjustment-For A/C . . . . . 12
- Compression Pressure Check . . . . . 13
- Timing Belt Tension Adjustment . . . . . 14
- Timing Belt B Tension Adjustment . . . . . 15

**OIL PAN AND OIL SCREEN** . . . . . 17

**TIMING BELT AND TIMING BELT B** . . . . . 19

**CRANKSHAFT OIL SEAL** . . . . . 25

**CAMSHAFT AND CAMSHAFT OIL SEAL** . . 27

**CYLINDER HEAD GASKET** . . . . . 30

**ENGINE ASSEMBLY** . . . . . 34


Purchased from www.WorkshopManuals.co.uk

www.WorkshopManuals.co.uk

# GENERAL INFORMATION

| Items | | | 4D56 |
|---|---|---|---|
| Total displacement mL | | | 2,477 |
| Bore x Stroke mm | | | 91.1 x 95.0 |
| Compression ratio | | | 21 |
| Combustion chamber | | | Vortex chamber type |
| Camshaft arrangement | | | SOHC |
| Number of valve | Intake | | 4 |
| | Exhaust | | 4 |
| Valve timing | Intake | Opening | BTDC 20° |
| | Exhaust | Closing | ABDC 49° |
| | Intake | Opening | BBDC 55° |
| | Exhaust | Closing | ATDC 22° |
| Fuel system | | | Distribution type injection pump |
| Rocker arm | | | Roller type |
| Adjusting screw | | | Elephant foot type |

Purchased from www.WorkshopManuals.co.uk

www.WorkshopManuals.co.uk

# SERVICE SPECIFICATIONS

| Items | | Standard value | Limit |
|---|---|---|---|
| A/C compressor drive belt (When inspection) | Vibration frequency Hz | 157 - 176 | – |
| | Tension N | 260 - 325 | – |
| | Deflection mm <Reference> | 8.0 - 8.5 | – |
| A/C compressor drive belt (When adjustment) | Vibration frequency Hz | 157 - 176 | – |
| | Tension N | 260 - 325 | – |
| | Deflection mm <Reference> | 8.0 - 8.5 | – |
| A/C compressor drive belt (When replacement) | Vibration frequency Hz | 192 - 208 | – |
| | Tension N | 390 - 450 | – |
| | Deflection mm <Reference> | 6.5 - 7.0 | – |
| Valve clearance (at hot) mm | | 0.25 | - |
| Injection timing (Value indicated on dial gauge mm) | | 9° ATDC (1 ± 0.03) | - |
| Idle speed r/min | | 750 ± 100 | - |
| Compression pressure kPa (at engine speed of 280 r/min) | | 3,040 | Min. 2,256 |
| Compression pressure difference of all cylinder (at engine speed of 280 r/min) kPa | | - | Max. 294 |
| Timing belt tension mm | | 4 - 5 | |
| Timing belt B tension mm | | 4 - 5 | |

# SEALANTS

| Items | Specified sealant | Remarks |
|---|---|---|
| Oil pan | MITSUBISHI GENUINE PART MD970389 or equivalent | Semi-drying sealant |
| Semi-circular packing and rocker cover gasket seal, and cylinder head seal | 3M ATD Part No. 8660 or equivalent | |

Purchased from www.WorkshopManuals.co.uk

www.WorkshopManuals.co.uk

# SPECIAL TOOLS

| Tools | Number | Name | Use |
|---|---|---|---|
| 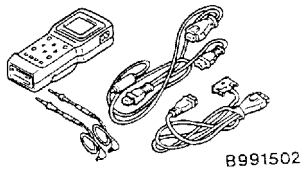  | MB991502 | MUT-II sub-assembly | Drive belt tension measurements |
| 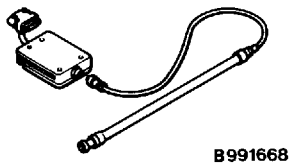  | MB991668 | Belt tension meter set | |
| 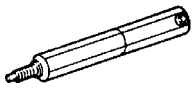 | MD998384 | Prestroke measuring adapter | Adjustment of the injection timing |
| 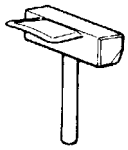 | MD998727 | Oil pan remover | Removal of oil pan |
| 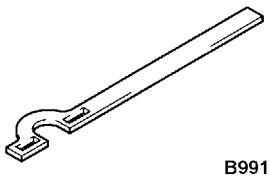  | MB991800 | Crankshaft pulley holder | Holding the crankshaft pulley |
| 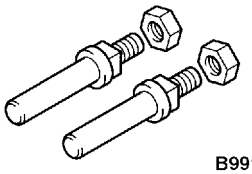  | MB991802 | Pin B | |
| 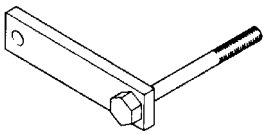 | MD998781 | Flywheel stopper | Securing the flywheel |
| 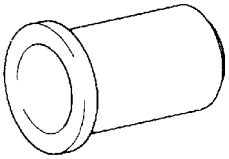 | MD998382 | Crankshaft front oil seal installer | Installing the crankshaft front oil seal |
| 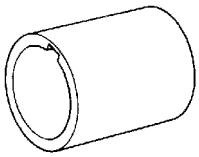 | MD998383 | Crankshaft front oil seal guide | |

Purchased from www.WorkshopManuals.co.uk

www.WorkshopManuals.co.uk

| Tools | Number | Name | Use |
|---|---|---|---|
| 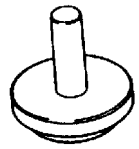 | MD998376 | Crankshaft rear oil seal installer | Press-fitting the crankshaft rear oil seal |
| 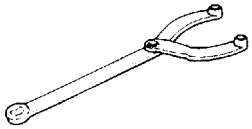 | MB990767 | End yoke holder | Holding the camshaft sprocket |
| 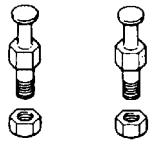 | MD998719 | Crankshaft pulley holder pin | |
| | MD998381 | Camshaft oil seal installer | Installing the camshaft oil seal |
| 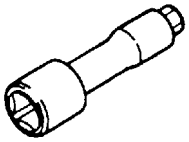 | MD998051 | Cylinder head bolt wrench | Removal and installation of the cylinder head bolt |

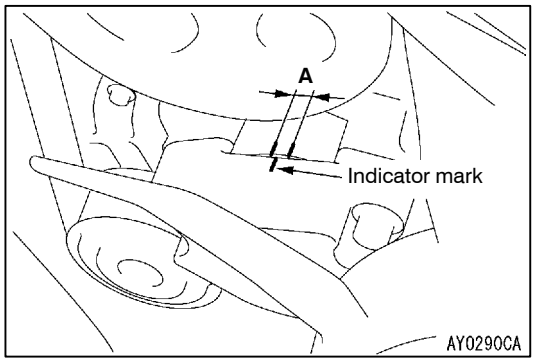


# ON-VEHICLE SERVICE

## DRIVE BELT TENSION CHECK AND ADJUSTMENT

### ALTERNATOR AND POWER STEERING OIL PUMP DRIVE BELT TENSION CHECK

**Caution**
**Perform the check after rotating the engine to the normal direction (one revolution and over).**

1. Check that the indicator mark of the auto-tensioner is located within the scope shown as “A” on the tensioner bracket.
2. If the mark is located out of the scope “A,” replace the drive belt.

   NOTE
   Since the auto-tensioner is used, it is not necessary to adjust the tension of the belt.

Purchased from www.WorkshopManuals.co.uk

www.WorkshopManuals.co.uk

## A/C COMPRESSOR DRIVE BELT TENSION CHECK AND ADJUSTMENT <VEHICLES WITH A/C>

1. Check the drive belt tension by the following procedures.

**Standard value:**

| Item | During inspection | During adjustment | During replacement |
|---|---|---|---|
| Vibration frequency Hz | 157 - 176 | 157 - 176 | 192 - 208 |
| Tension N | 260 - 325 | 260 - 325 | 390 - 450 |
| Deflection mm <Reference> | 8.0 - 8.5 | 8.0 - 8.5 | 6.5 - 7.0 |

**<When using MUT-II>**

(1) Connect the MUT-II to the special tool (MB991668).
(2) Connect the MUT-II to the diagnosis connector.

**Caution**
**Always turn the ignition switch to LOCK (OFF) position before disconnecting or connecting the MUT-II.**

(3) Turn the ignition switch to ON, and select the "Belt tension measurement" on the menu screen.

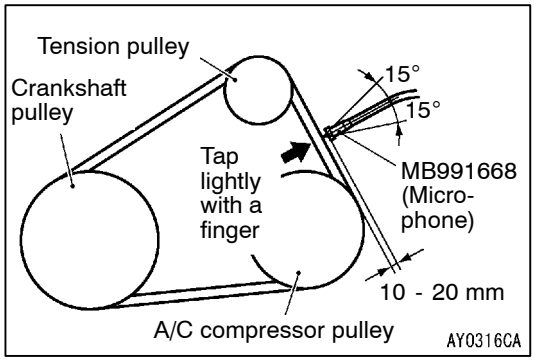


(4) Hold a microphone to the middle of the drive belt between the pulleys (at the place indicated by the arrow), approximately 10 - 20 mm away from the rear surface of the belt and so that it is perpendicular to the belt (within an angle of ±15°).
(5) Gently tap the middle of the belt between the pulleys (the place indicated by the arrow) with your finger as shown in the illustration, and check that the vibration frequency of the belt is within the standard value.

**Caution**
1) **The temperature of the surface of the belt should be as close to normal temperature as possible.**
2) **Do not allow any contaminants such as water or oil to get onto the microphone.**
3) **If strong gusts of wind blow against the microphone or if there are any loud sources of noise nearby, the values measured by the microphone may not correspond to actual values.**
4) **If the microphone is touching the belt while the measurement is being made, the values measured by the microphone may not correspond to actual values.**
5) **Do not take the measurement while the vehicle's engine is running.**

Purchased from www.WorkshopManuals.co.uk

www.WorkshopManuals.co.uk

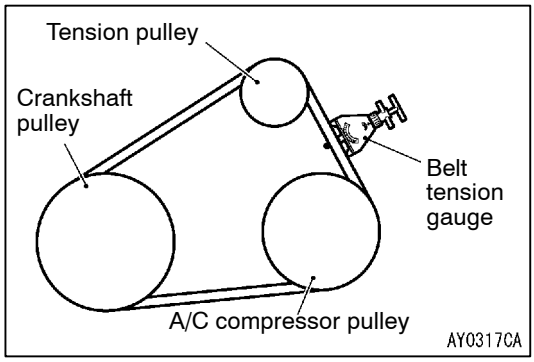


**<When using a tension gauge>**
Use a belt tension gauge to check that the belt tension is within the standard value.

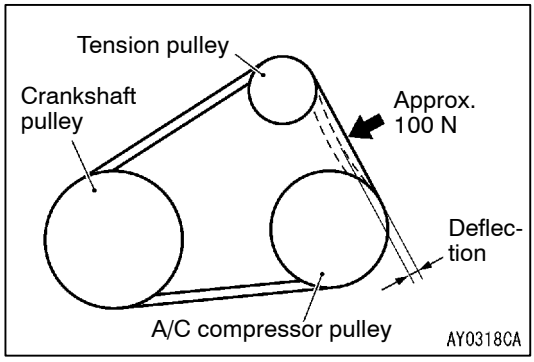


**<When checking the deflection>**
Apply approx. 100 N of force to the middle of the drive belt between the pulleys (at the place indicated by the arrow) and check that the amount of deflection is within the standard value.

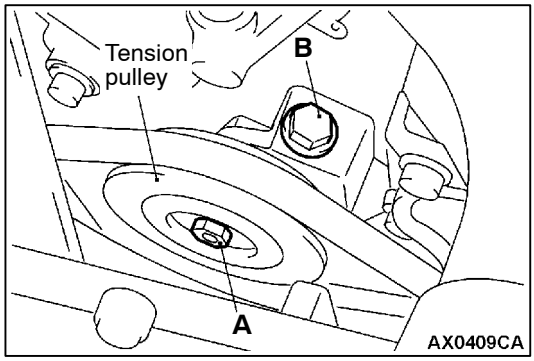


2. If not within the standard value, adjust the belt tension by the following procedure.
   (1) Loosen the tension pulley securing bolt A.
   (2) Use the adjusting bolt B to adjust the belt deflection.
   (3) Tighten the securing bolt A to the specified torque.

   **Tightening torque: 44 ± 10 N·m**

   (4) Check the belt tension, and readjust if necessary.

   **Caution**
   **When checking the belt tension, turn the crankshaft clockwise one turn or more.**

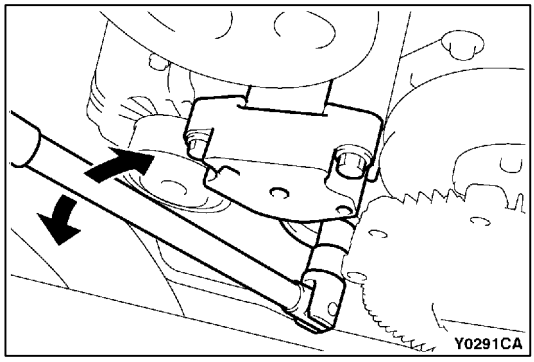


## AUTO-TENSIONER CHECK

1. Run the engine at idling speed and then stop it to check whether the drive belt is forced out from the width of the auto-tensioner pulley.
2. Remove the alternator and power steering oil pump drive belt. (Refer P.11B-19.)
3. Locate a ring spanner onto the auto-tensioner pulley mounting bolt, and move the tensioner back and forth to confirm there is no stiffness.
4. If some abnormality is found during the above mentioned check (1) and (3), replace the auto-tensioner.
5. Install the alternator and power steering oil pump drive belt. (Refer P.11B-19.)

Purchased from www.WorkshopManuals.co.uk

www.WorkshopManuals.co.uk

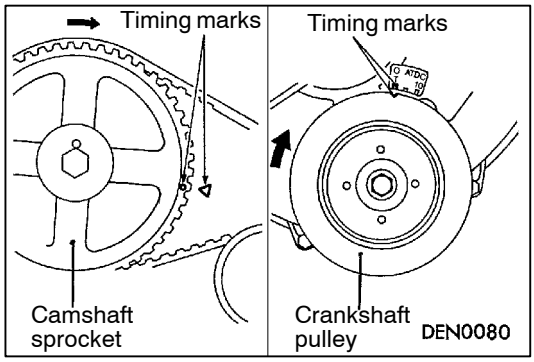


## VALVE CLEARANCE CHECK AND ADJUSTMENT

1. Start the engine and allow it to warm up until the engine coolant temperature reaches 80 to 90 °C.
2. Remove the timing belt upper cover.
3. Remove the rocker cover.
4. Align the camshaft sprocket timing marks and set the No. 1 cylinder at top dead centre.

   **Caution**
   **The crankshaft should always be turned in a clockwise direction.**

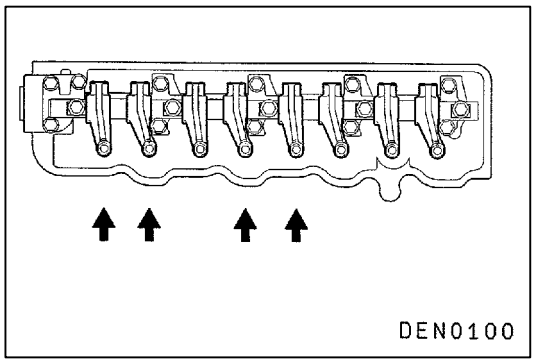


5. Measure the valve clearance at the places indicated by arrows in the illustration.

   **Standard value: 0.25 mm**

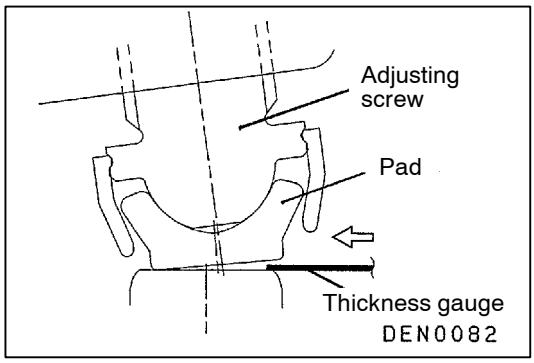


NOTE
Insert the thickness gauge from the centre of the cylinder head towards the outside so that it doesn't touch the pad.

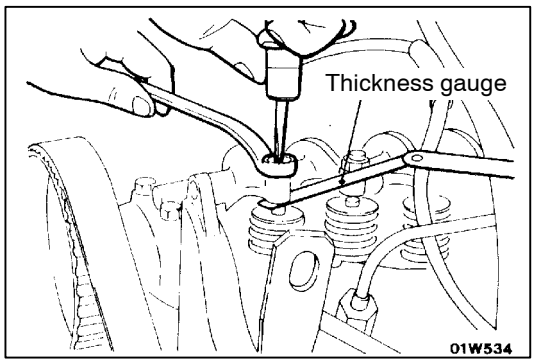


6. If the clearance is outside the standard value, loosen the lock nut of the rocker arm and adjust by turning the adjusting screw while using a thickness gauge to measure the clearance.
7. Tighten the lock nut while holding the adjusting screw with a screwdriver so that it doesn't turn.
8. Turn the crankshaft 360° clockwise to bring No. 4 cylinder to the top dead centre position.

Purchased from www.WorkshopManuals.co.uk

www.WorkshopManuals.co.uk

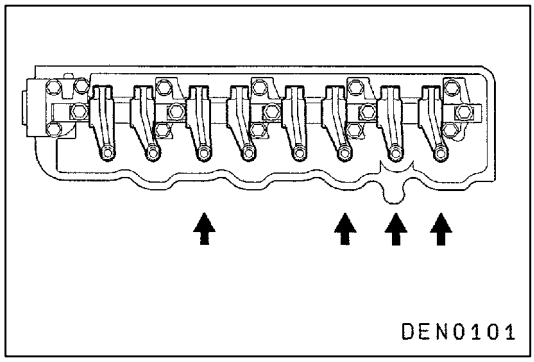


9. Measure the valve clearances at the places indicated by arrows in the illustration. If the clearance is not within the standard value, repeat steps 7 and 8 above.

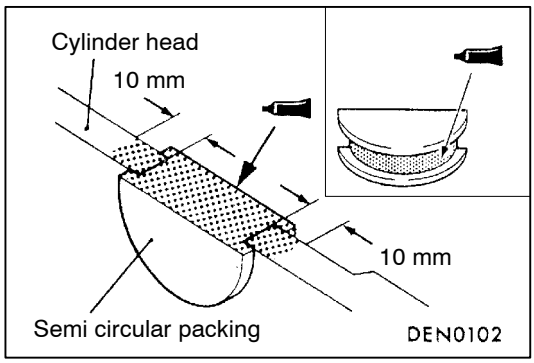


10. Apply specified sealant to the section of the semi-circular packing shown in the illustration.

    **Specified sealant: 3M ATD Part No. 8660 or equivalent**

11. Install the rocker cover.
12. Install the timing belt upper cover.

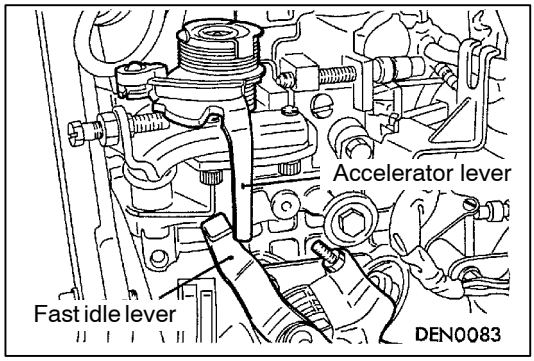


## INJECTION TIMING CHECK AND ADJUSTMENT

1. Warm up the engine and then check to be sure that the fast idle lever is separated from the accelerator lever.
2. Remove all of the glow plugs.
3. Remove the timing belt upper cover.

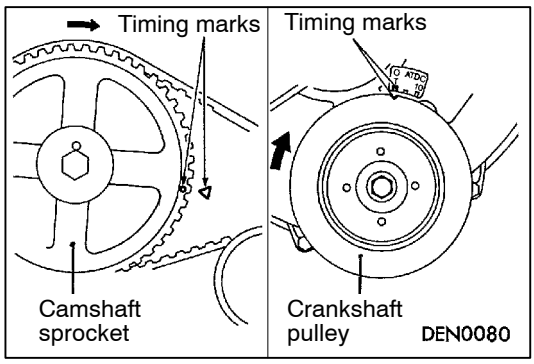


4. Align the timing marks of the camshaft sprocket and set the No. 1 cylinder to the top dead centre position.

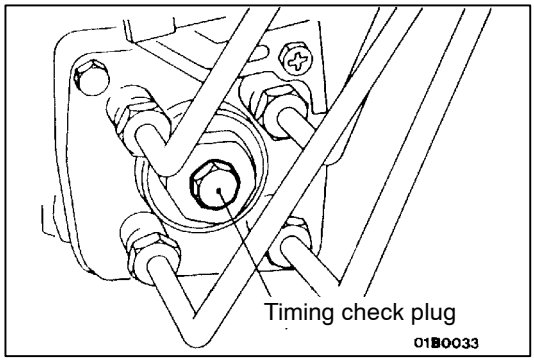


5. Remove the timing check plug at the rear of the injection pump.

Purchased from www.WorkshopManuals.co.uk

www.WorkshopManuals.co.uk

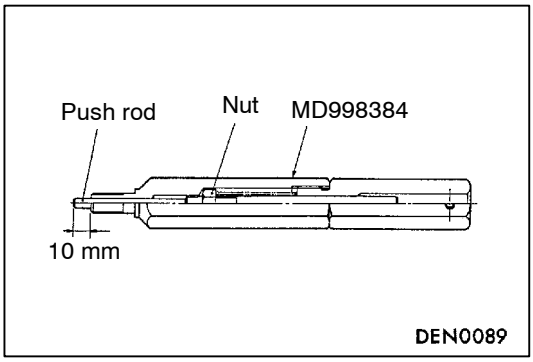


6. Before installation of special tool, make sure that push rod is protruding by 10 mm. Protrusion of push rod can be adjusted with an inner nut.
7. Connect the dial gauge to the special tool.

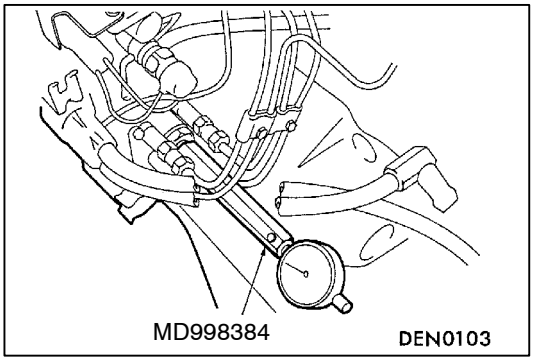


8. Install the special tool to the check plug at the rear of the injection pump.

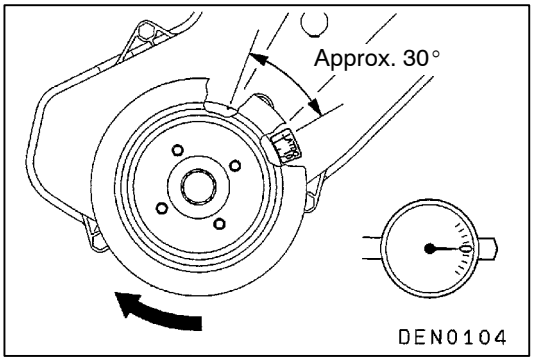


9. Turn the crankshaft clockwise to move the No. 1 cylinder approximately 30° before compression top dead centre.
10. Set the needle of the dial gauge to 0.
11. Check that the needle doesn't move even if the crankshaft is turned slightly (2 - 3°) in both clockwise and counterclockwise direction.

    NOTE
    If the needle moves, the notch is not positioned properly, so once again move the No. 1 cylinder approximately 30° before compression top dead centre.

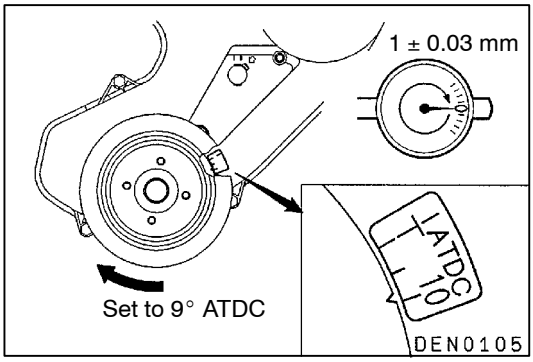


12. Turn the crankshaft clockwise to align the No. 1 cylinder to 9° ATDC.
13. Check that the value indicated on the dial gauge is at the standard value.

    **Standard value: 1 ± 0.03 mm**

Purchased from www.WorkshopManuals.co.uk

www.WorkshopManuals.co.uk

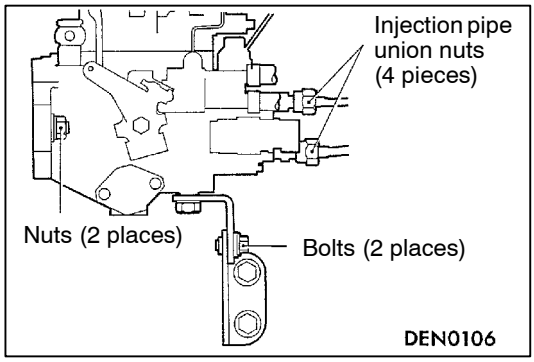


14. If the needle is outside the standard value, adjust the injection timing by the following procedure.
    (1) Loosen the injection pipe union nuts (4 places) on the injection pump. (Do not remove the union nuts.)

    **Caution**
    **When loosening the nuts, hold the delivery valve holders with a spanner so that they don't turn at the same time.**

    (2) Loosen the upper mounting nuts and the lower mounting bolts of the injection pump. (Do not remove the nut and bolt.)

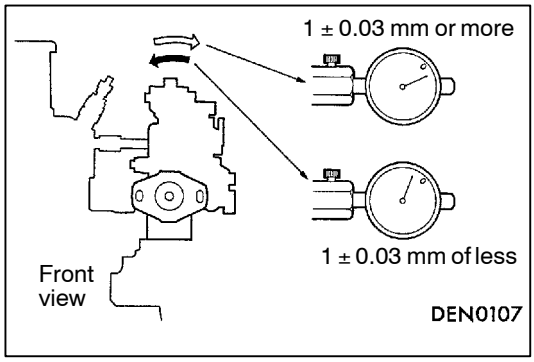


    (3) Tilt the injection pump to the left and right and adjust the needle on the dial gauge so that the display value is uniform.
    (4) Provisionally tighten the mounting nut and bolt of the injection pump.
    (5) Repeat steps 9 - 13 to check if the adjustment has been made correctly.

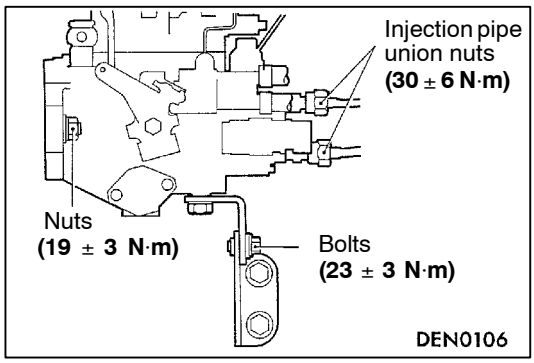


    (6) Tighten the mounting nuts and bolts to the specified torque.
    (7) Tighten the injection pump union nuts to the specified torque.

    **Caution**
    **When tightening the nuts, hold the delivery valve holders with a spanner so that they don't turn at the same time.**

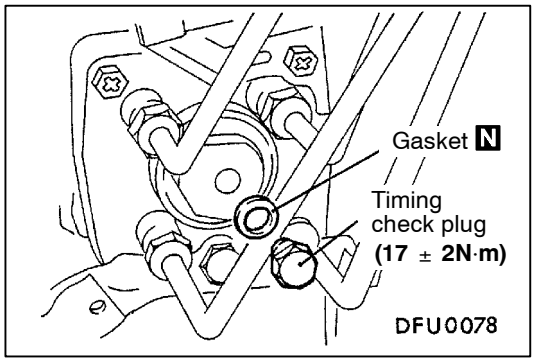


15. Remove the special tool.
16. Install a new gasket to the timing check plug.
17. Tighten the timing check plug to the specified torque.

Purchased from www.WorkshopManuals.co.uk

www.WorkshopManuals.co.uk

## IDLE SPEED CHECK AND ADJUSTMENT

NOTE
Check that the injection timing is normal

1. Before inspection, set the vehicle to the pre-inspection condition.

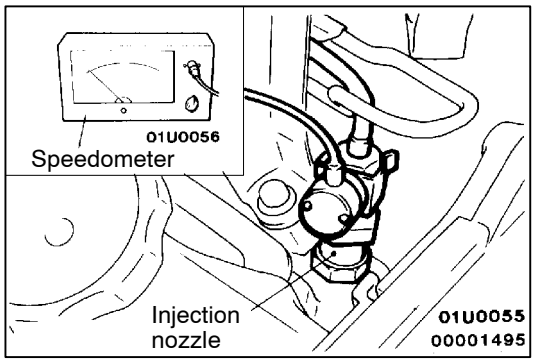


2. Connect the speedometer to the injection nozzle or the injection pipe.

   **Caution**
   **When the speedometer is connected to the injection pipe, the pipe mounting clamps should all be removed.**

3. Start the engine and run it at idle.
4. Check the idle speed.

   **Standard value: 750 ± 100 r/min**

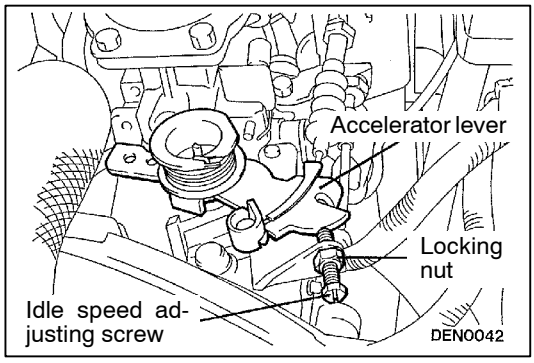


5. If not within the standard value, loosen idle adjusting screw lock nut and adjust the idle speed by rotating adjusting screw. And tighten locking nut.

## IDLE-UP MECHANISM CHECK AND ADJUSTMENT-FOR A/C

Refer to GROUP 55 - On-vehicle Service.

Purchased from www.WorkshopManuals.co.uk

www.WorkshopManuals.co.uk

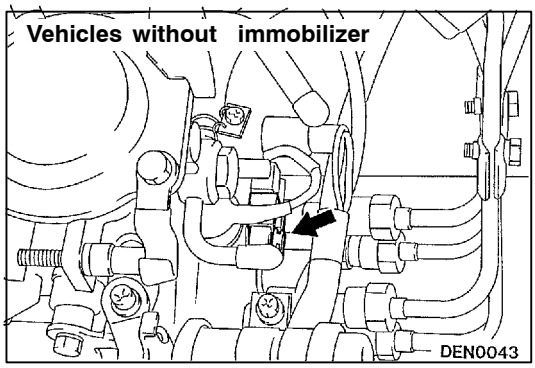


## COMPRESSION PRESSURE CHECK

1. Before inspection, check that the engine oil, starter and battery are normal. In addition, set the vehicle to the pre-inspection condition.
2. Remove all of the glow plugs.

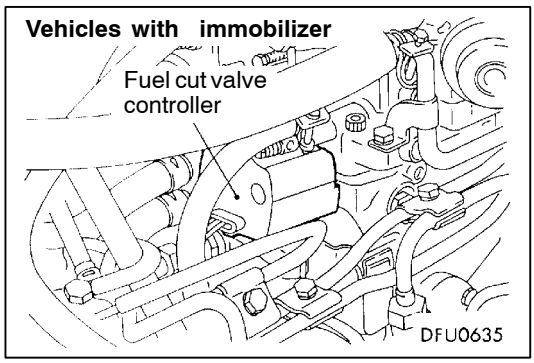


3. Disconnect the fuel cut solenoid valve connector. <Vehicles without immobilizer> Disconnect the fuel cut valve controller connector. <Vehicles with immobilizer>

   NOTE
   Doing this will prevent carrying out fuel injection.
4. Cover the glow plug hole with a shop towel etc., and after the engine has been cranked, check that no foreign material is adhering to the shop towel.

   **Caution**
   **(1) Keep away from the glow plug hole when cranking**
   **(2) If compression is measured with water, oil, fuel, etc., that has come from cracks inside the cylinder, these materials will become heated and will gush out from glow plug hole, which is dangerous.**

Purchased from www.WorkshopManuals.co.uk

www.WorkshopManuals.co.uk

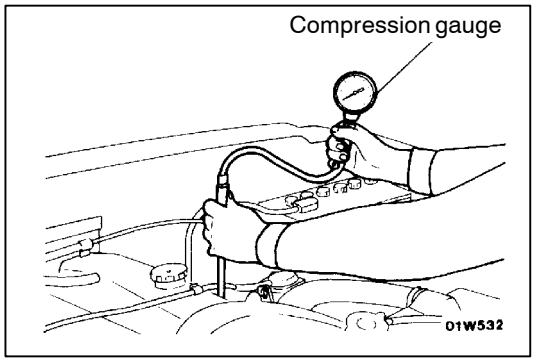


5. Set compression gauge to one of the glow plug holes.
6. Crank the engine and measure the compression pressure.

   **Standard value (at engine speed of 280 r/min): 3,040 kPa**

   **Limit (at engine speed of 280 r/min): min. 2,256 kPa**
7. Measure the compression pressure for all the cylinders, and check that the pressure differences of the cylinders are below the limit.

   **Limit: max 294 kPa**
8. If there is a cylinder with compression or a compression difference that is outside the limit, pour a small amount of engine oil through the glow plug hole, and repeat the operations in steps (6) and (7).
   (1) If the compression increases after oil is added, the cause of the malfunction is a worn or damaged piston ring and/or cylinder inner surface.
   (2) If the compression does not rise after oil is added, the cause is a burnt or defective valve seat, or pressure is leaking from the gasket.
9. Connect the fuel cut solenoid valve connector or fuel cut valve controller connector.
10. Install the glow plugs.

    **Tightening torque: 18 ± 2 N·m**

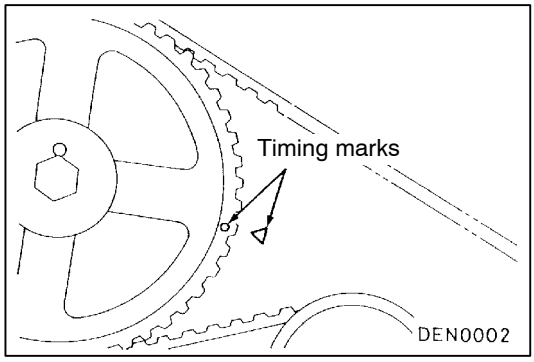


## TIMING BELT TENSION ADJUSTMENT

1. Remove the timing belt upper cover.
2. Align the timing mark on the camshaft sprocket with the timing mark on the front upper case to set the No.1 cylinder to top dead centre of its compression stroke.

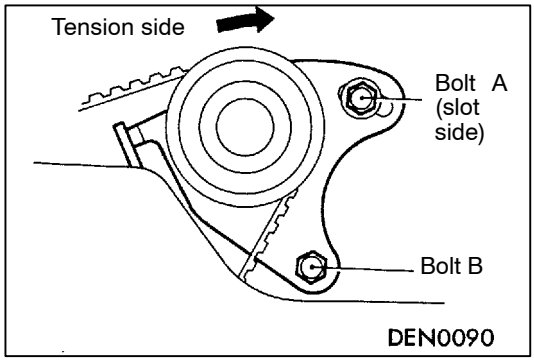


3. Loosen the two tensioner mounting bolts 1 or 2 turns.

   NOTE
   This will allow the tensioner spring to tension the timing belt automatically.

Purchased from www.WorkshopManuals.co.uk

www.WorkshopManuals.co.uk

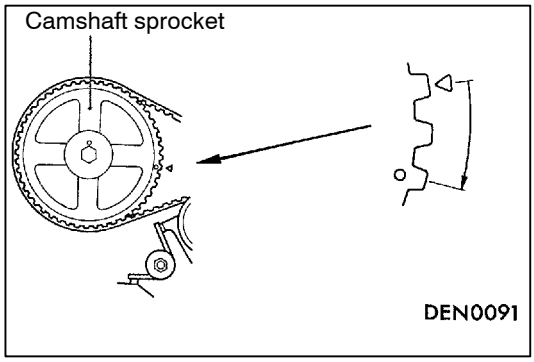


4. Turn the crankshaft clockwise and stop at the second teeth of the camshaft sprocket.

   **Caution**
   **(1) This will allow the timing belt to be tensioned by a specified amount, so never overturn the crankshaft.**
   **(2) Never turn the crankshaft counterclockwise.**

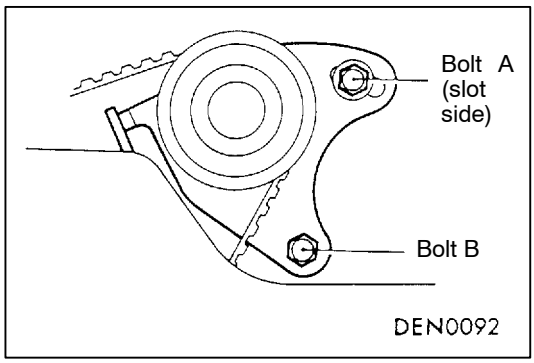


5. To prevent the tensioner bracket from be turned together with the crankshaft, first tighten slot-side bolt A to the specified torque, and then tighten bolt B to the specified torque.

   **Tightening torque: 26 N·m**

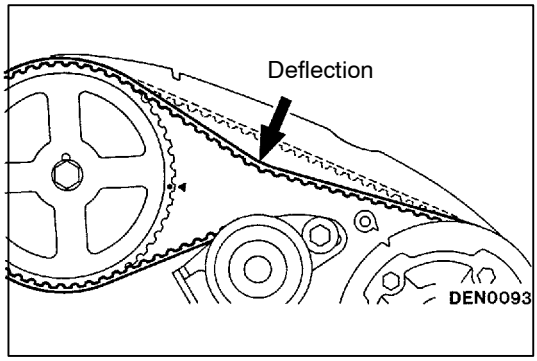


6. Turn the crankshaft counterclockwise to align the timing marks. Push down belt at a point halfway with a forefinger to check that defection of belt is up to standard value.

   **Standard value: 4.0 - 5.0 mm**

7. Mount the timing belt upper cover.

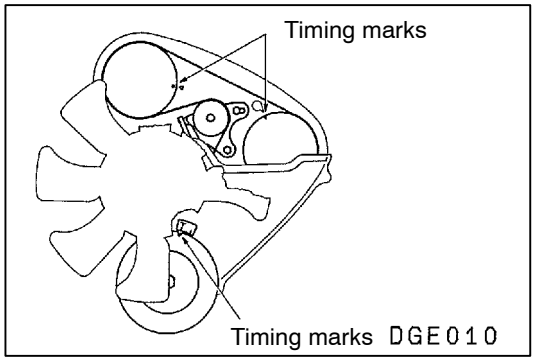


## TIMING BELT B TENSION ADJUSTMENT

1. Remove timing belt upper cover.
2. Turn the crankshaft in the clockwise direction and check the timing belt around its entire circumference for abnormalities.
3. Align the timing marks on the sprockets with the timing mark on the front upper case.

   **Caution**
   **When aligning the timing mark, be sure not to turn the crankshaft in the counterclockwise direction as this can cause improper belt tension.**

Purchased from www.WorkshopManuals.co.uk

www.WorkshopManuals.co.uk

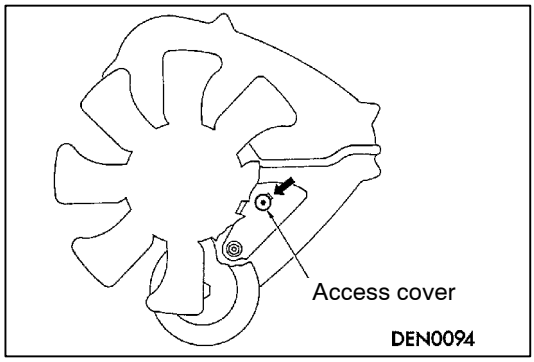


4. Remove the access cover.

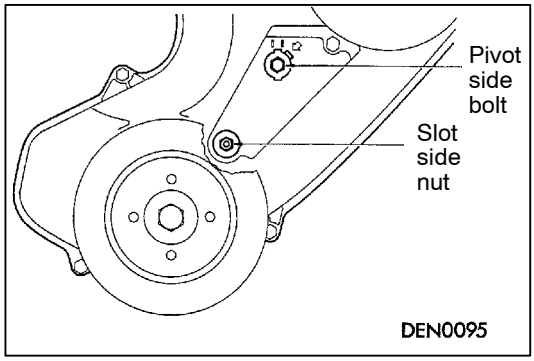


5. Loosen the tensioner pivot side bolt 1 mm and slot side nut 1 or 2 turns.

   NOTE
   These works will allow the tensioner spring to tension timing belt B automatically.
6. First tighten tensioner slot side nut, and then tighten pivot side bolt to the specified torque.

   **Tightening torque:**
   **Pivot side bolt 24 ± 4 N·m**
   **Slot side nut 23 ± 3 N·m**

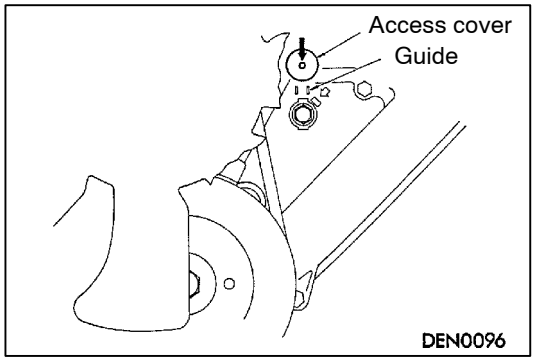


7. Install the access cover while sliding the front lower cover down along the two guides.
8. Install the timing belt upper cover.

Purchased from www.WorkshopManuals.co.uk

www.WorkshopManuals.co.uk

# OIL PAN AND OIL SCREEN

## REMOVAL AND INSTALLATION

**Pre-removal and Post-installation Operation**
- Skid Plate and Under Cover Removal and Installation
- Engine Oil Draining and Supplying (Refer to GROUP 12 - On-vehicle Service.)
- Differential Gear Oil Draining and Supplying (Refer to GROUP 26 - On-vehicle Service.)
- Front Differential and No.2 Crossmember Assembly Removal and Installation (Refer to GROUP 11A - Oil Pan and Oil Screen.)

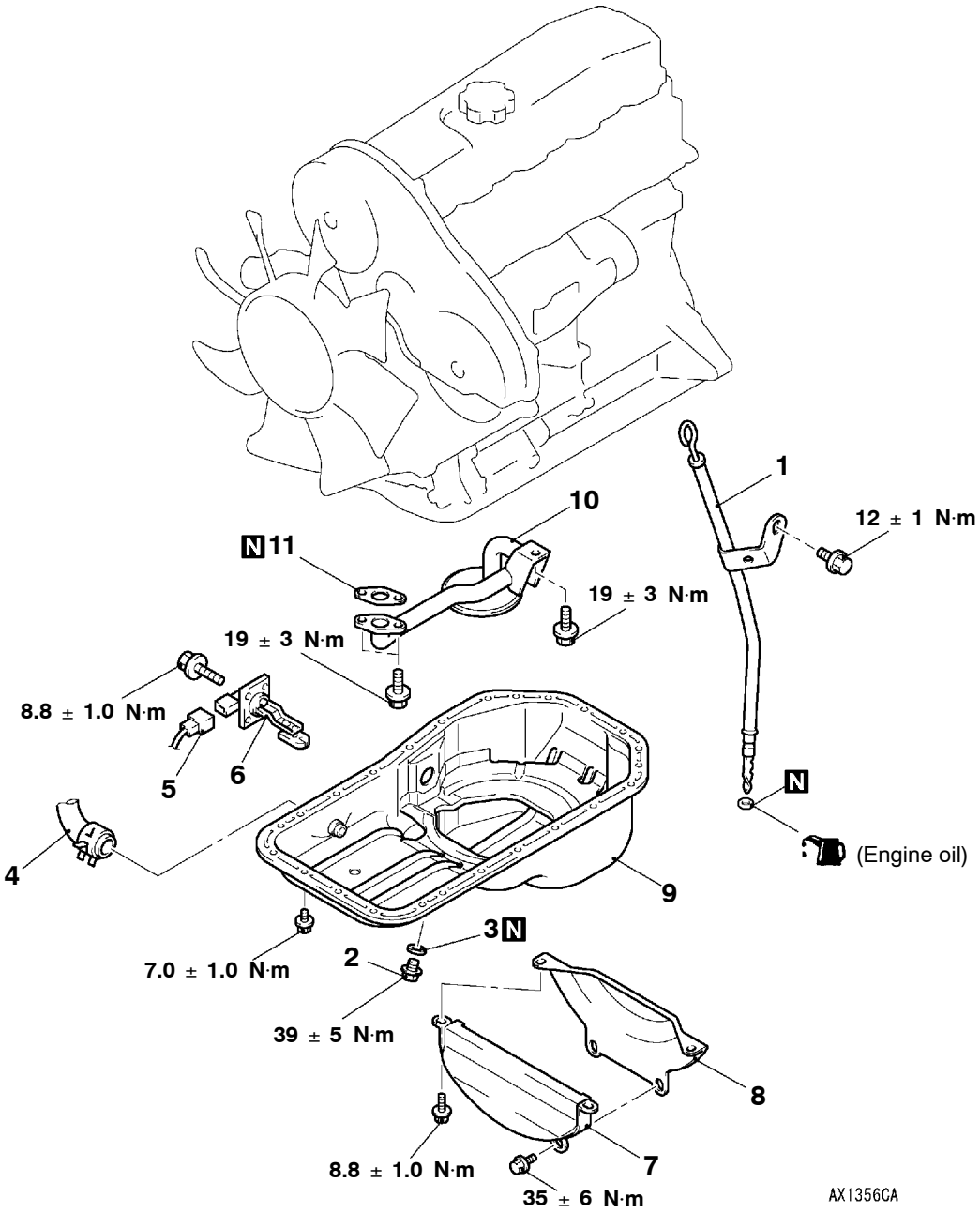


**Removal steps**

1. Engine oil level gauge and guide assembly
2. Drain plug
3. ▶B◀ Drain plug gasket
4. Alternator vacuum pump oil return hose connection
5. Oil level sensor connector
6. Oil level sensor
7. Space rubber
8. Bell housing cover
9. ◀A▶ ▶A◀ Oil pan
10. Oil screen
11. Oil screen gasket

Purchased from www.WorkshopManuals.co.uk

www.WorkshopManuals.co.uk

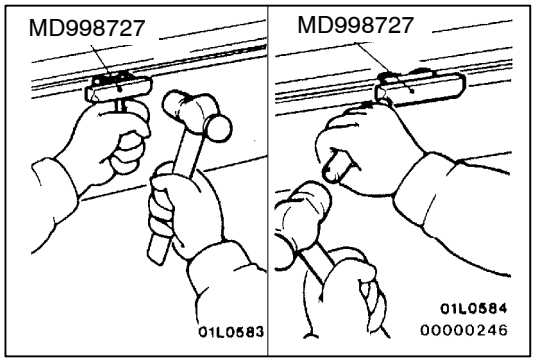


## REMOVAL SERVICE POINT

### ◀A▶ OIL PAN REMOVAL

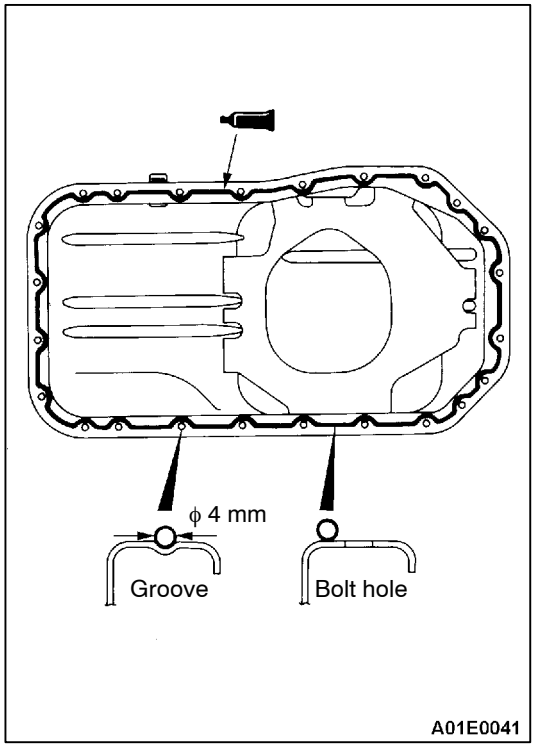


## INSTALLATION SERVICE POINTS

### ▶A◀ OIL PAN INSTALLATION

1. Remove sealant from oil pan and cylinder block mating surfaces.
2. Degrease the sealant-coated surface and the engine mating surface.
3. Apply a continuous bead of the specified sealant to the oil pan mating surface as shown.

   **Specified sealant:**
   **MITSUBISHI GENUINE PART No. MD970389 or equivalent**

   NOTE
   The sealant should be applied in a continuous bead approximately 4 mm in diameter.
4. Assemble oil pan to cylinder block within 15 minutes after applying the sealant.

   **Caution**
   **After installing the oil pan, wait at least 1 hour before starting the engine.**

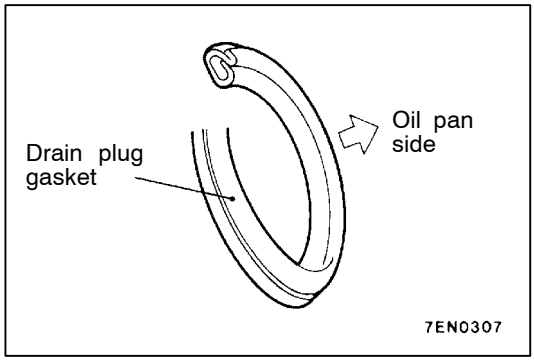


### ▶B◀ DRAIN PLUG GASKET INSTALLATION

Install a new gasket in the direction so that it faces as shown in the illustration.

## INSPECTION

- Check oil pan for cracks.
- Check oil pan sealant-coated surface for damage and deformation.
- Check oil screen for cracked, clogged or damaged wire net and pipe.

Purchased from www.WorkshopManuals.co.uk

www.WorkshopManuals.co.uk

# TIMING BELT AND TIMING BELT B

## REMOVAL AND INSTALLATION

**Post-installation Operation**
Drive Belt Tension Check and Adjustment
(Refer to P.11B-5.)

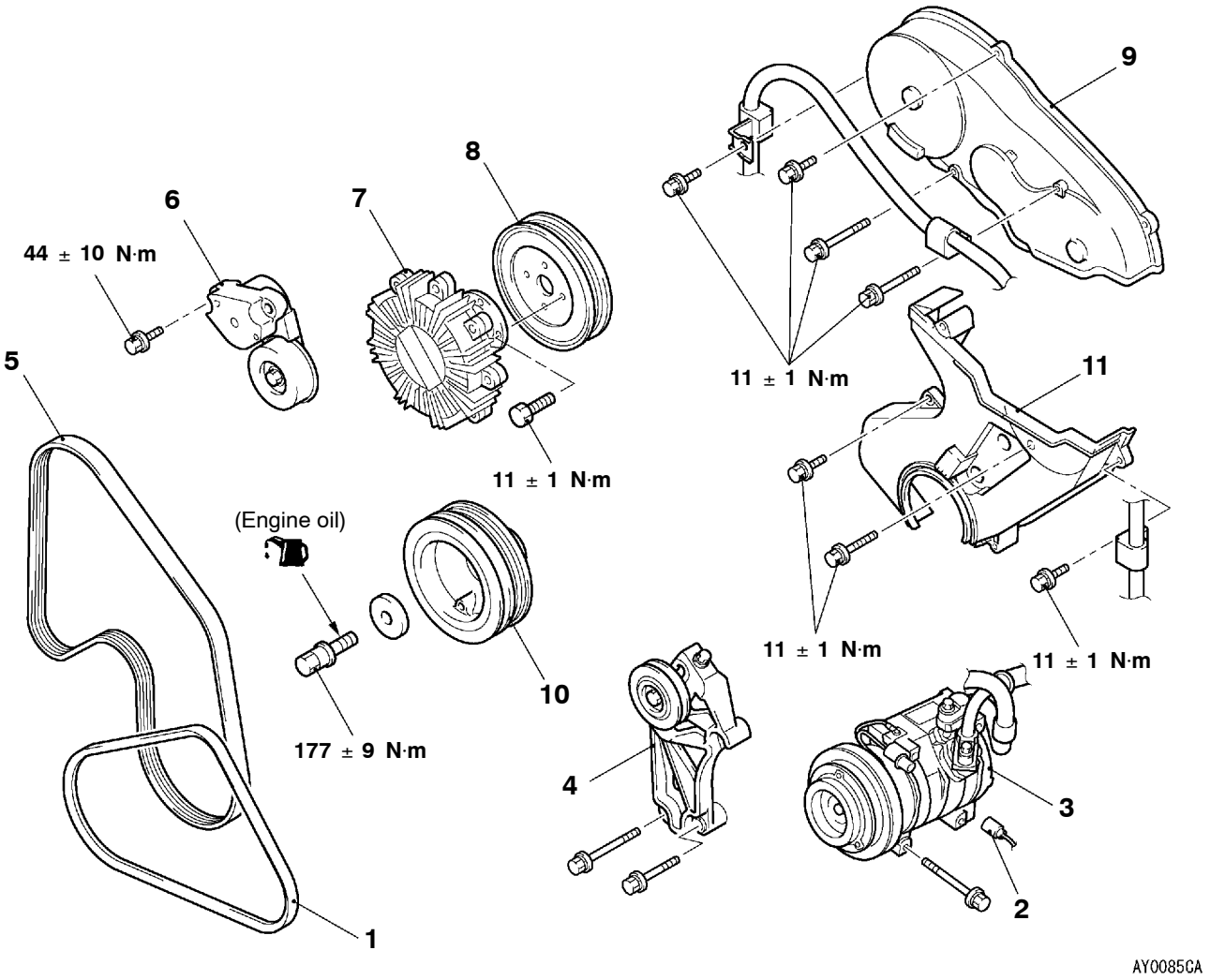


**Removal steps**

- Radiator upper shroud (Refer to GROUP 14.)

◀A▶ 1. A/C compressor drive belt <Vehicles with A/C>
2. A/C compressor connector <Vehicles with A/C>

◀B▶ 3. A/C compressor <Vehicles with A/C>
4. Tension pulley and tension pulley bracket assembly <Vehicles with A/C>

- Cooling fan (Refer to GROUP 14.)

◀C▶ 5. Alternator and power steering oil pump drive belt
6. Auto-tensioner
7. Fan Clutch
8. Water pump pulley

▶C◀ 9. Timing belt front upper cover

◀D▶ 10. Crankshaft pulley

▶C◀ 11. Timing belt front lower cover

Purchased from www.WorkshopManuals.co.uk

www.WorkshopManuals.co.uk

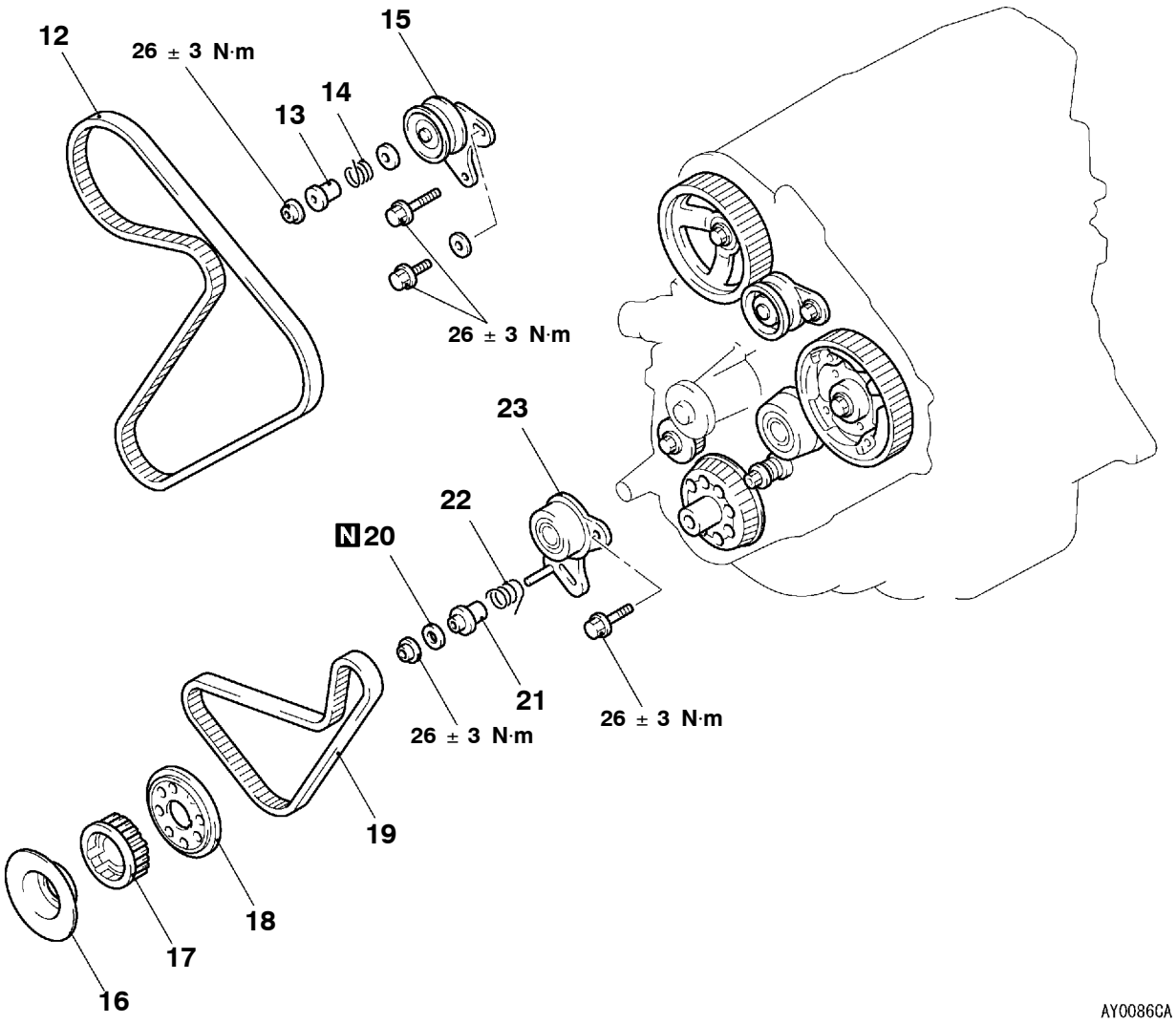


◀E▶ ▶B◀ 12. Timing belt
13. Tensioner spacer
14. Tensioner spring
15. Timing belt tensioner
16. Front flange
17. Crankshaft sprocket
18. Flange
◀F▶ ▶A◀ 19. Timing belt B
20. Gasket
21. Tensioner spacer B
22. Tensioner spring B
23. Timing belt tensioner B

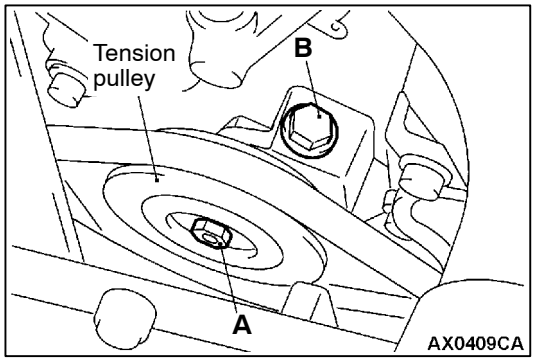


## REMOVAL SERVICE POINTS

### ◀A▶ A/C COMPRESSOR DRIVE BELT REMOVAL

1. Loosen the tension pulley securing bolt A.
2. Loose the adjusting bolt B to remove the belt.

**Caution**
**To reuse the drive belt, mark its running direction (clockwise direction) on the belt back side with a chalk.**

Purchased from www.WorkshopManuals.co.uk

www.WorkshopManuals.co.uk

### ◀B▶ A/C COMPRESSOR REMOVAL

1. Remove the A/C compressor from the bracket with its refrigerant hoses still attached.
2. Suspend the A/C compressor with a cord out of the way.

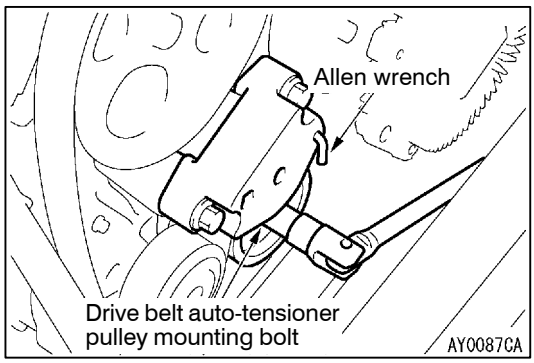


### ◀C▶ALTERNATOR AND POWER STEERING PUMP DRIVE BELT REMOVAL

The following operations will be needed due to the introduction of the serpentine drive system with the drive belt auto tensioner.

1. Locate a ring spanner onto the drive belt auto-tensioner pulley mounting bolt, and move the tensioner clockwise until it touches the stopper.
2. Hold the tensioner by inserting an Allen wrench as shown, and remove the drive belt.

**Caution**
**To reuse the drive belt, mark its running direction (clockwise direction) on the belt back side with a chalk.**

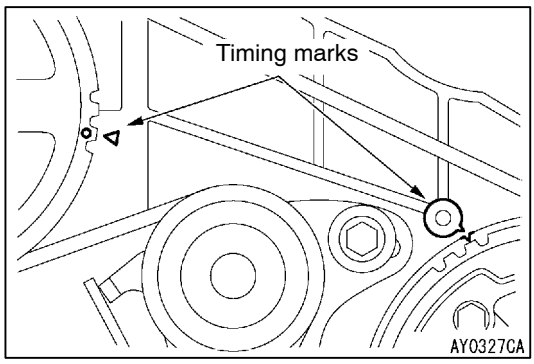


### ◀D▶ CRANKSHAFT PULLEY REMOVAL

1. Turn the crankshaft clockwise, align the timing marks to set No.1 cylinder to TDC of its compression stroke.

**Caution**
**Never turn the crankshaft anticlockwise.**

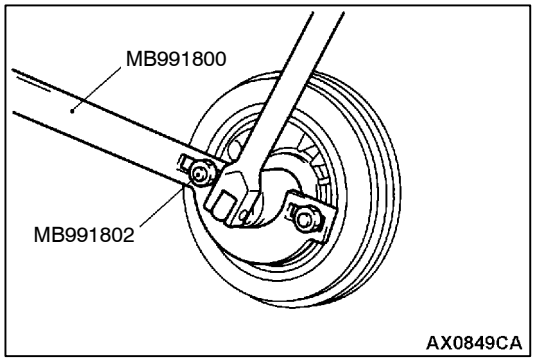


2. Use the special tool to keep crankshaft from turning and remove the bolts.

Purchased from www.WorkshopManuals.co.uk

www.WorkshopManuals.co.uk

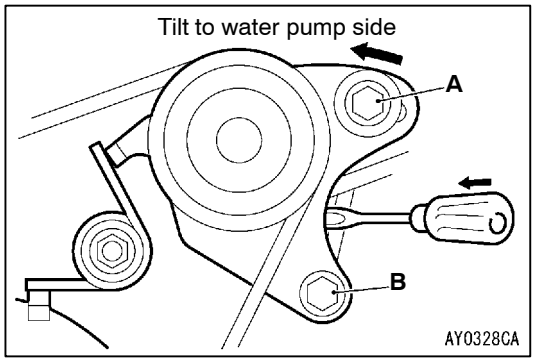


### ◀E▶ TIMING BELT REMOVAL

1. When reinstalling timing belt, mark an arrow at the belt to show rotation direction.
2. Loosen the tensioner mounting bolt A and B.
3. Push timing belt tensioner to water pump side and tighten the tensioner mounting bolt A and B. Secure so that tensioner will not move back.

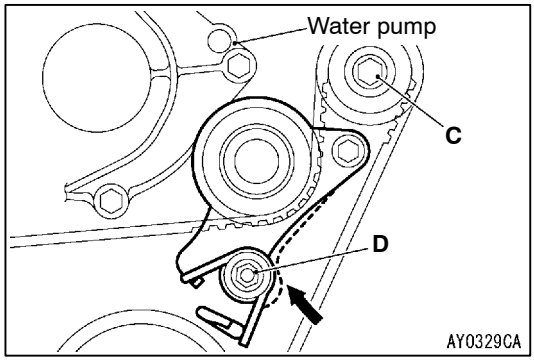


### ◀F▶ TIMING BELT B REMOVAL

1. When reinstalling timing belt B, mark an arrow at the belt to show rotation direction.
2. Loosen the tensioner mounting bolt C and nut D.
3. Push timing belt tensioner to water pump side and tighten the tensioner mounting bolt C and nut D. Secure so that tensioner will not move back.

## INSTALLATION SERVICE POINTS

### ▶A◀ TIMING BELT B INSTALLATION

1. Align the timing marks of the 3 sprockets.
2. When reusing timing belt B, make sure the arrow mark is pointing in the same direction as when the belt was removed.
3. Install timing belt B and make sure there is no deflection on the tension side.
4. Press the deflection side of timing belt B with the hand and fully stretch the tensioner side.
5. Make sure that the timing marks are aligned.
6. Loosen the tensioner mounting bolt and nut so that only the pressure of the spring is applied to timing belt B.
7. Tighten the tensioner mounting bolt C and nut D, tightening the nut first. If the bolt is tightened first, the tensioner will move and tension the belt.

   **Tightening torque: 26 ± 3 N·m**

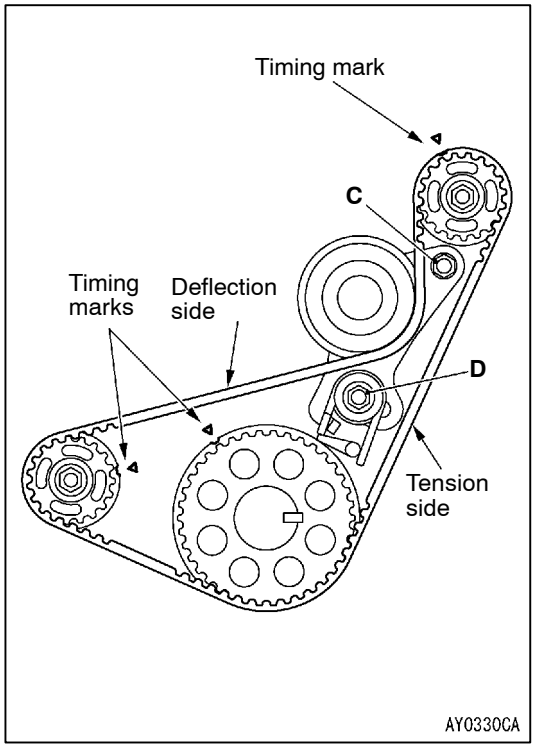


8. Press in the direction of the arrow in the figure with the index finger to check the amount of deflection.

   **Standard value: 4 - 5 mm**

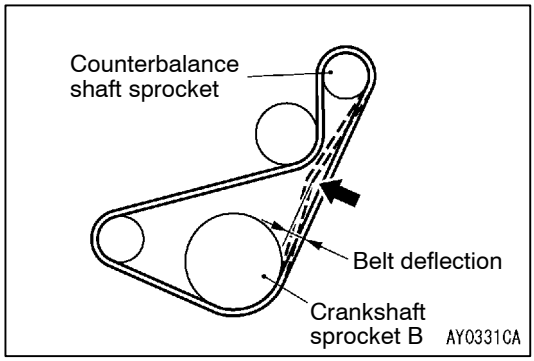


Purchased from www.WorkshopManuals.co.uk

www.WorkshopManuals.co.uk

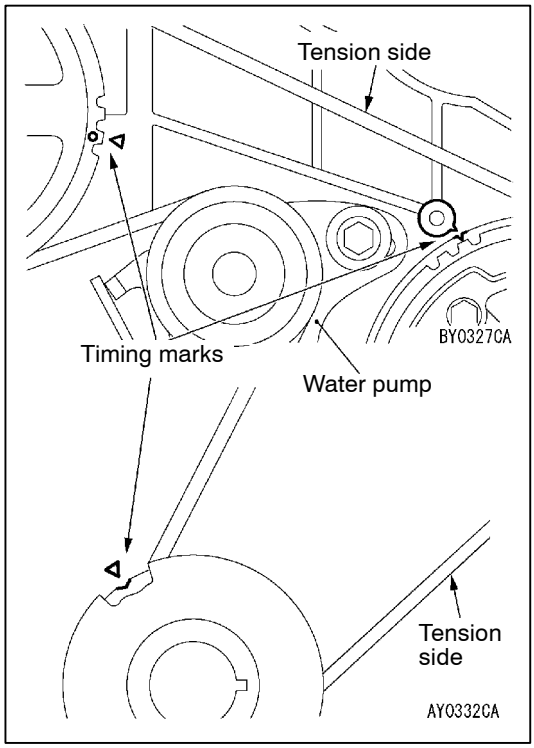


## ▶B◀ TIMING BELT INSTALLATION

1. Align the timing marks of the 3 sprockets.
2. When reusing timing belt, make sure the arrow mark is pointing in the same direction as when the belt was removed.
3. Install the timing belt to the crankshaft sprocket, to injection pump sprocket, to tensioner and to camshaft sprocket in that order. Being careful not to allow deflection on the tension side of the timing belt.

   **Caution**
   **(1) Engage the belt on the various sprockets while maintaining tension on the belt of tension side.**
   **(2) Align the injection pump sprocket with the timing mark, hold the sprocket so that is does not turn and engage the belt.**
4. Loosen the tensioner mounting bolts and apply tension with the spring.

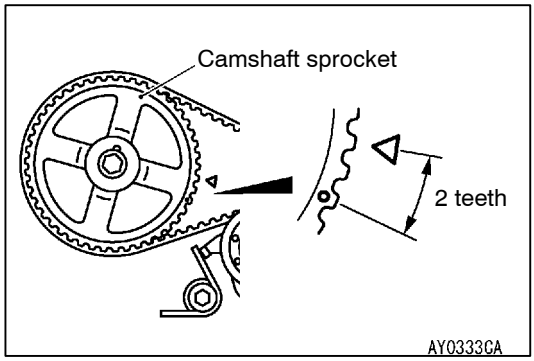


5. Turn the crankshaft clockwise and stop at the second lobe of the camshaft sprocket.

   **Caution**
   **(1) When turning the crankshaft in item (5), strictly observe the specified amount of rotation (2 teeth on the camshaft sprocket) in order to apply a constant force to the tension side of the belt.**
   **(2) Do not turn the crankshaft counterclockwise.**
   **(3) Do not touch the belt during adjustment.**

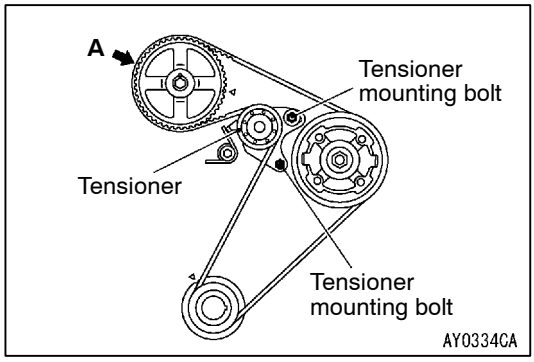


6. Make sure that the part indicated by arrow A does not float upward.
7. Tighten the tensioner mounting bolts, starting with the bolt in the elongated hole. If the lower bolt is tightened first, belt tension will become too tight.
8. Turn the crankshaft anticlockwise and align the timing mark. Next, make sure that the timing marks of all sprockets are aligned.

Purchased from www.WorkshopManuals.co.uk

www.WorkshopManuals.co.uk

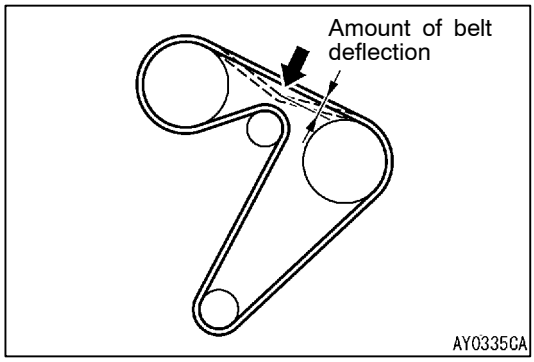


9. Press on the center of the bolt with an index finger to check the amount of deflection.

   **Standard value: 4 - 5 mm**

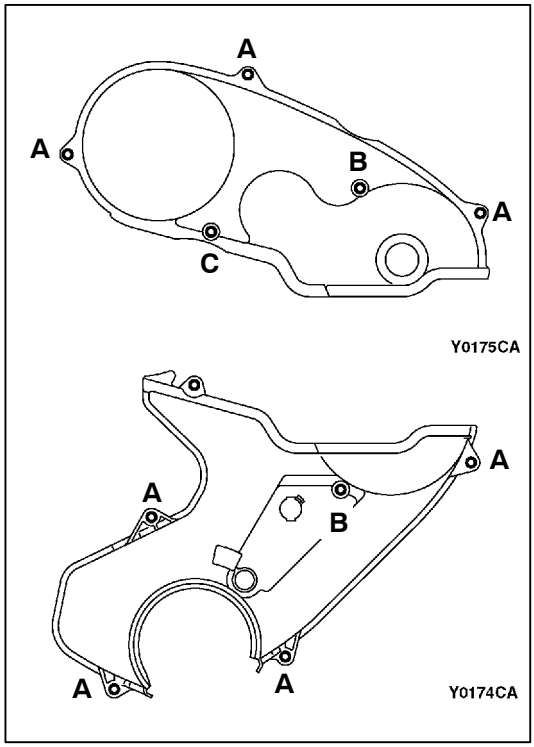


**▶C◀ TIMING BELT FRONT LOWER COVER/TIMING BELT FRONT UPPER COVER INSTALLATION**

Install the bolts to the timing belt cover at the shown positions.

| Name | Symbols | Size mm (d × l) |
|---|---|---|
| Flange bolt | A | 6 × 22 |
| | B | 6 × 50 |
| | C | 6 × 60 |

d=Nominal diameter
l=Nominal length

Purchased from www.WorkshopManuals.co.uk

www.WorkshopManuals.co.uk

# CRANKSHAFT OIL SEAL

## REMOVAL AND INSTALLATION

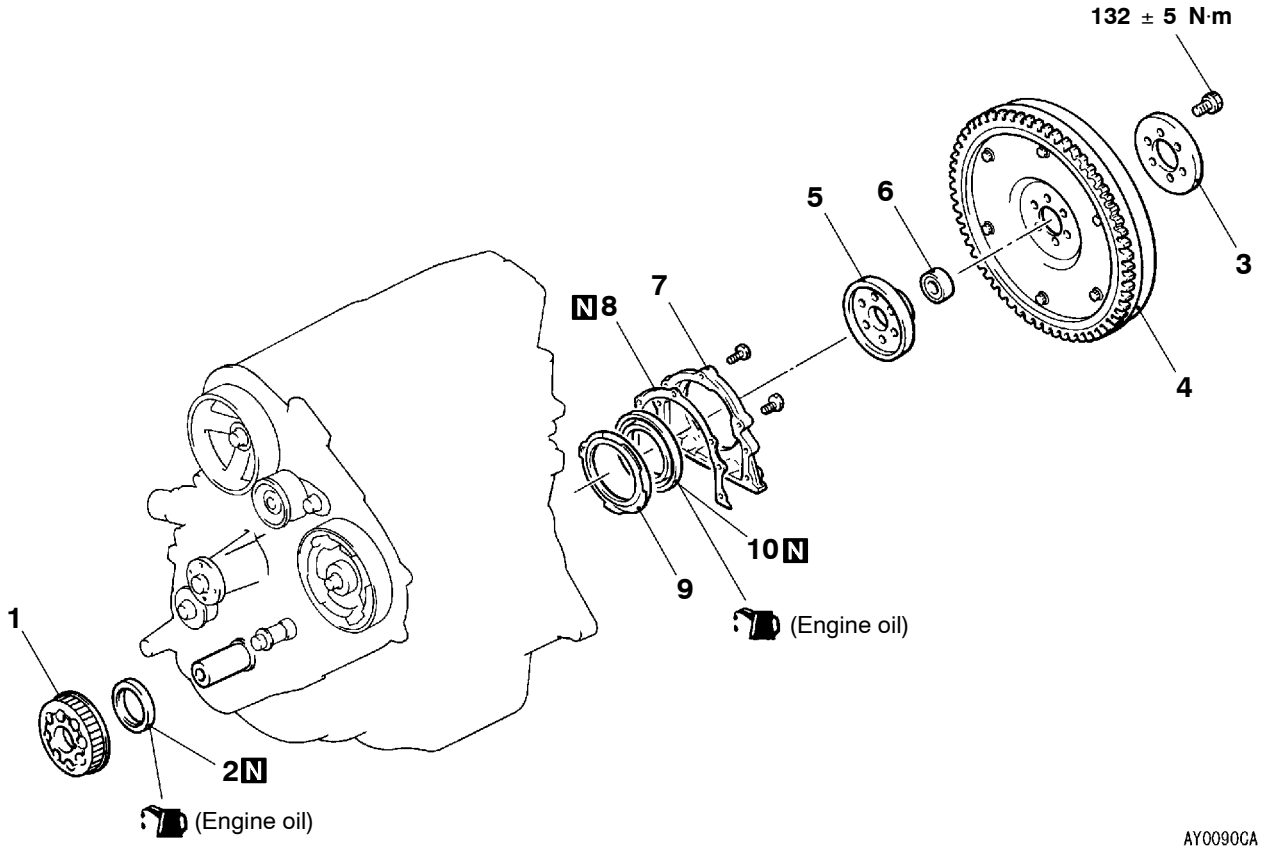


**Crankshaft front oil seal removal steps**

- Timing belt and timing belt B removal and installation (Refer to P.11B-19.)

1. Crankshaft sprocket B
2. ▶D◀ Crankshaft front oil seal

**Crankshaft rear oil seal removal steps**

- Transmission assembly (Refer to GROUP 22.)

3. Adapter plate
4. ◀A▶ ▶C◀ Flywheel assembly
5. Crankshaft adaptor
6. Ball bearing
7. Oil seal case
8. Gasket
9. ▶B◀ Oil separator
10. ▶A◀ Crankshaft rear oil seal

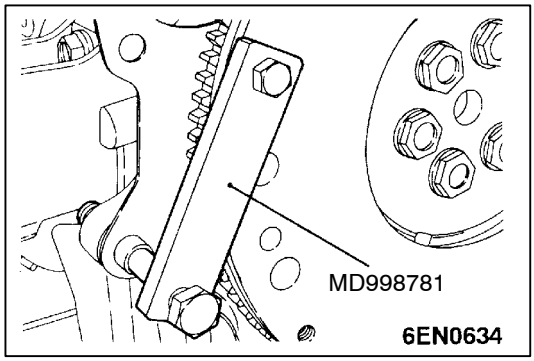


## REMOVAL SERVICE POINTS

### ◀A▶ FLYWHEEL ASSEMBLY REMOVAL

Purchased from www.WorkshopManuals.co.uk

www.WorkshopManuals.co.uk

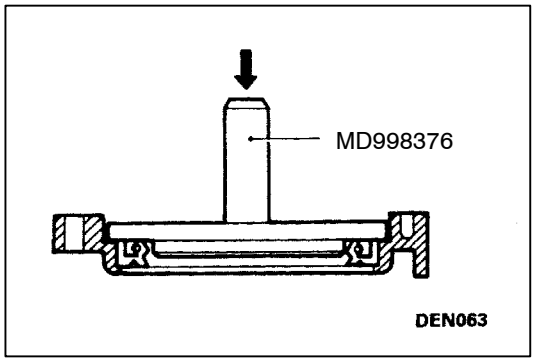


## INSTALLATION SERVICE POINTS

### ▶A◀ CRANKSHAFT REAR OIL SEAL INSTALLATION

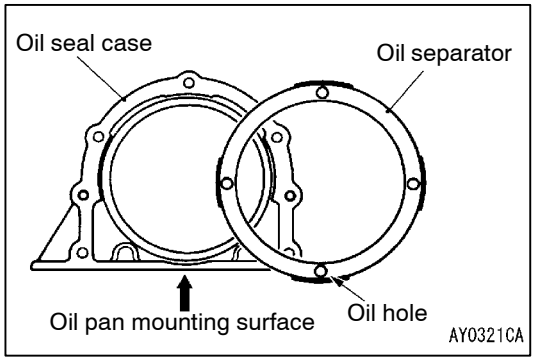


### ▶B◀ OIL SEPARATOR INSTALLATION

Install the oil separator in such a way that its oil hole come at the case bottom (indicated by an arrow in the illustration).

### ▶C◀ FLYWHEEL ASSEMBLY INSTALLATION

Use the special tool in the same way as during removal to stop the flywheel assembly from turning, and then tighten the bolt to the specified torque.

**Tightening torque: 132 ± 5 N·m**

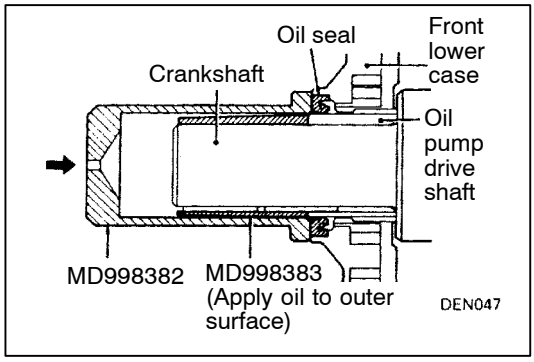


### ▶D◀ CRANKSHAFT FRONT OIL SEAL INSTALLATION

Apply engine oil to the outside of the special tool (MD998383) and to the oil seal lip, and use the special tool to press-fit the oil seal.

Purchased from www.WorkshopManuals.co.uk

www.WorkshopManuals.co.uk

# CAMSHAFT AND CAMSHAFT OIL SEAL

## REMOVAL AND INSTALLATION

**Pre-removal and Post-installation Operation**
- Air Pipe and Air Intake Hose Removal and Installation (Refer to GROUP 15 - Intake Manifold and Exhaust manifold, Turbocharger <4D5>.)

Apply engine oil to all moving parts during installation.




**Sealant:**
**3M ATD Part No. 8660 or equivalent**

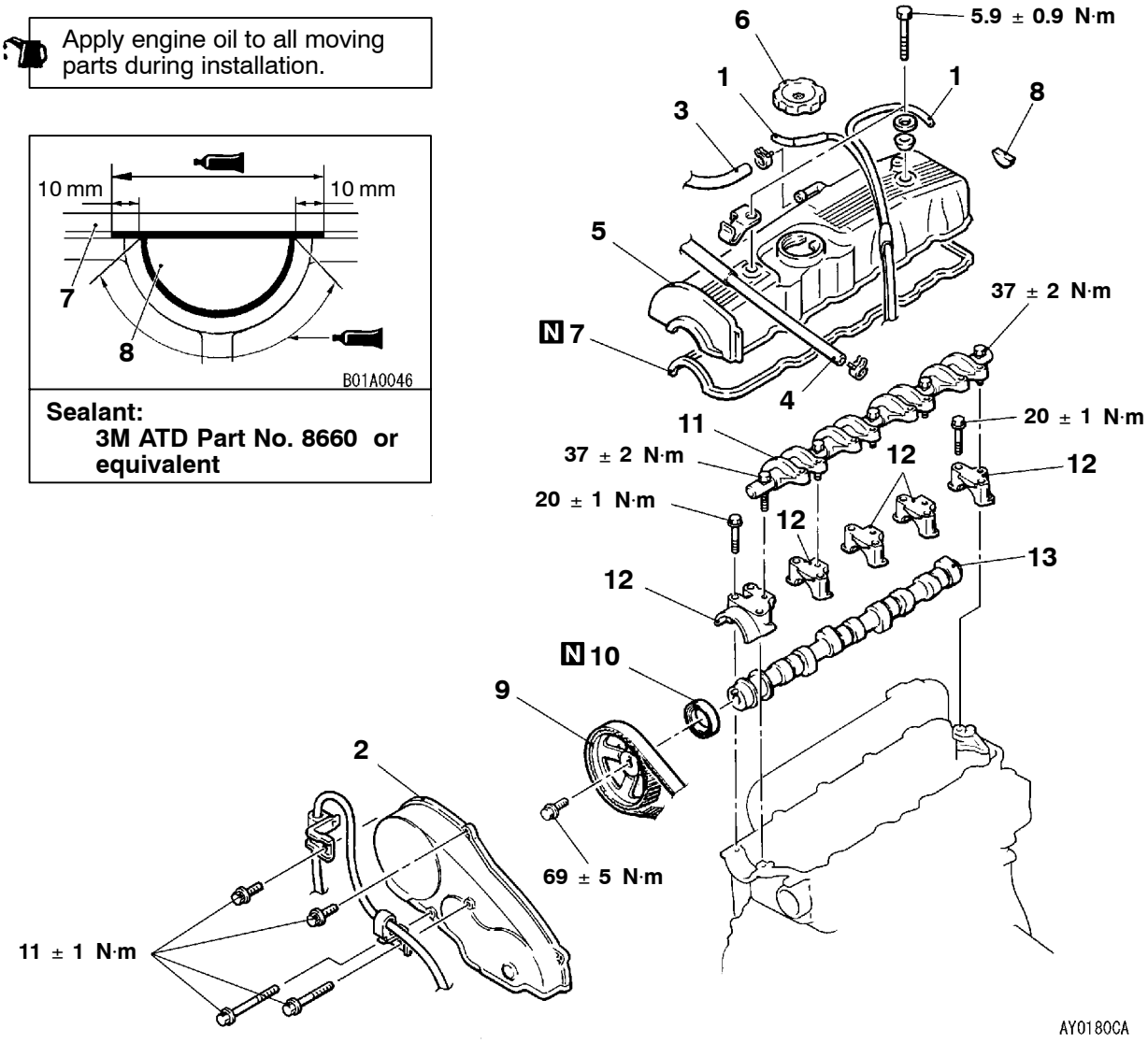


**Camshaft removal steps**

1. Vacuum hose connection
2. ▶E◀ Timing belt front upper cover
3. Breather hose connection
4. Boost hose connection
5. Rocker cover
6. Oil filler cap
7. Rocker cover gasket
8. Semi-circular packing
   - Valve clearance adjustment (Refer to P.11B-8.)
9. ◀A▶ ▶D◀ Camshaft sprocket
10. ▶C◀ Camshaft oil seal
11. ◀B▶ ▶B◀ Rocker arm and shaft assembly
12. ▶A◀ Camshaft bearing cap
13. Camshaft

**Camshaft oil seal removal steps**

2. ▶E◀ Timing belt upper cover assembly
9. ◀A▶ ▶D◀ Camshaft sprocket
10. ▶C◀ Camshaft oil seal

Purchased from www.WorkshopManuals.co.uk

www.WorkshopManuals.co.uk

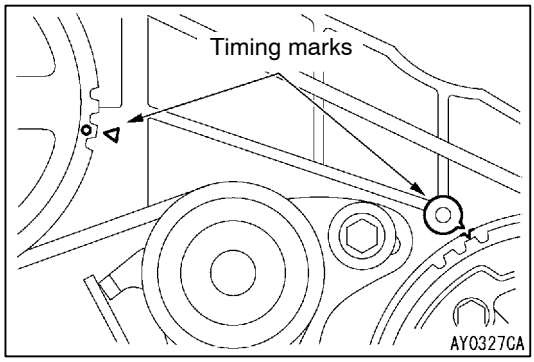


## REMOVAL SERVICE POINTS

### ◀A▶ CAMSHAFT SPROCKET REMOVAL

1. Turn the crankshaft clockwise, align the timing marks to set No.1 cylinder to TDC of its compression stroke.

   **Caution**
   **Never turn the crankshaft anticlockwise.**

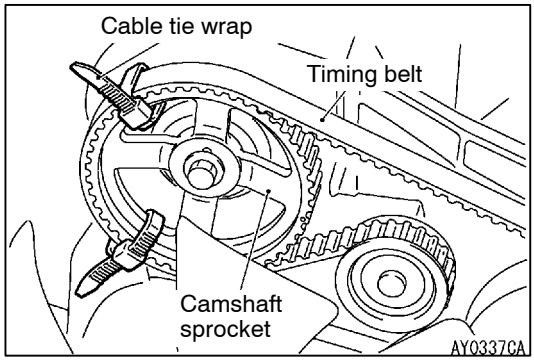


2. Tie the camshaft sprocket and timing belt together with a cable tie wrap so that timing mark is not maladjusted.

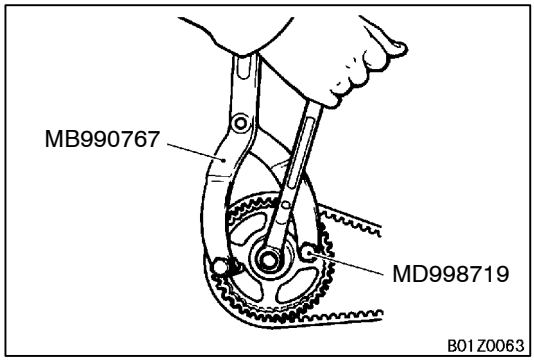


3. Use the special tool to stop the camshaft sprocket from turning, and then remove the camshaft sprocket with the timing belt still attached.

   **Caution**
   **Do not rotate crankshaft after removing camshaft sprocket.**

### ◀B▶ ROCKER ARM AND SHAFT ASSEMBLY REMOVAL

Loosen the rocker arm and shaft assembly mounting bolt, and then remove the rocker arm and shaft assembly with the bolt still attached.

**Caution**
**Never disassemble the rocker arm and shaft assembly.**

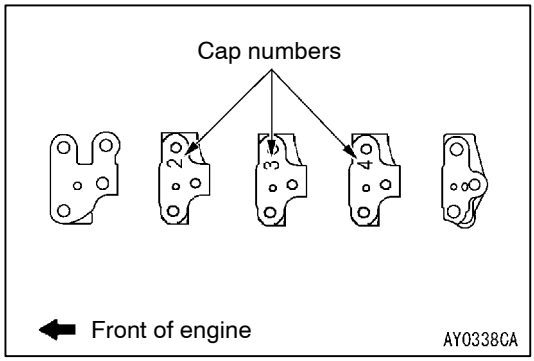


## INSTALLATION SERVICE POINTS

### ▶A◀ CAMSHAFT BEARING CAP INSTALLATION

The cap numbers are embossed on the top surface of the bearing caps, so install in the order of the numbers. However, no numbers are embossed on bearing caps 1 and 5.

Purchased from www.WorkshopManuals.co.uk

www.WorkshopManuals.co.uk

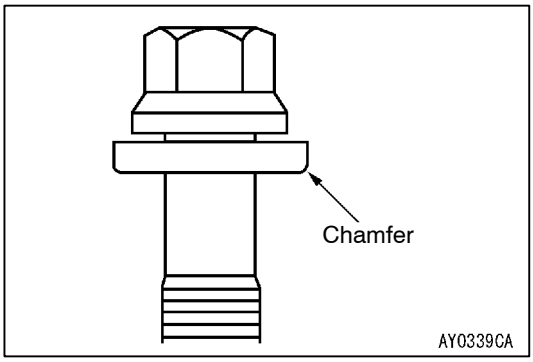


### ▶B◀ ROCKER ARM AND SHAFT ASSEMBLY INSTALLATION

1. Install the rocker arm and shaft assembly to the bearing caps.
2. Set the washer so that it faces in the direction shown in the illustration, and then install the bolt.

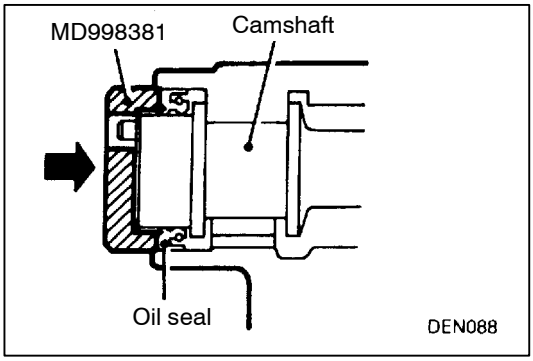


### ▶C◀ CAMSHAFT OIL SEAL INSTALLATION

1. Apply a small amount of engine oil to the entire circumference of the oil seal lip and camshaft.
2. Use the special tool to tap in the oil seal.

   NOTE
   The oil seal should be tapped in until the distance from the end of the camshaft to the end of the oil seal is as shown in the illustration.

### ▶D◀ CAMSHAFT SPROCKET INSTALLATION

1. Use the special tool in the same way as during removal to stop the camshaft sprocket from turning, and then tighten the bolt to the specified torque.

   **Tightening torque: 69 ± 5 N·m**
2. Remove the cord which binds the camshaft sprocket and timing belt.

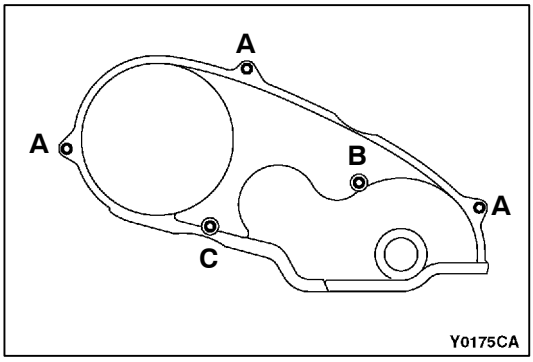


### ▶E◀ TIMING BELT FRONT UPPER COVER INSTALLATION

Install the bolts to the timing timing belt front upper cover at the shown positions.

| Name | Symbols | Size mm (d × l) |
|---|---|---|
| Flange bolt | A | 6 × 22 |
| | B | 6 × 50 |
| | C | 6 × 60 |

d=Nominal diameter
l=Nominal length

Purchased from www.WorkshopManuals.co.uk

www.WorkshopManuals.co.uk

# CYLINDER HEAD GASKET

## REMOVAL AND INSTALLATION

**Pre-removal and Post-installation Operation**
- Cooling Fan and Fan Clutch Assembly Removal and Installation (Refer to GROUP 14.)
- Intake Manifold Removal and Installation (Refer to GROUP15 - Intake Manifold and Exhaust Manifold, Turbocharger <4D5>.)
- Engine Oil Check and Refill (Refer to GROUP 12 - On-vehicle Service.) <Post-installation operation>
- Fuel Line Air-bleeding (Refer to GROUP 13B - On-vehicle Service.) <Post-installation operation>
- Timing Belt Removal and Installation (Refer to P.11B-19.)

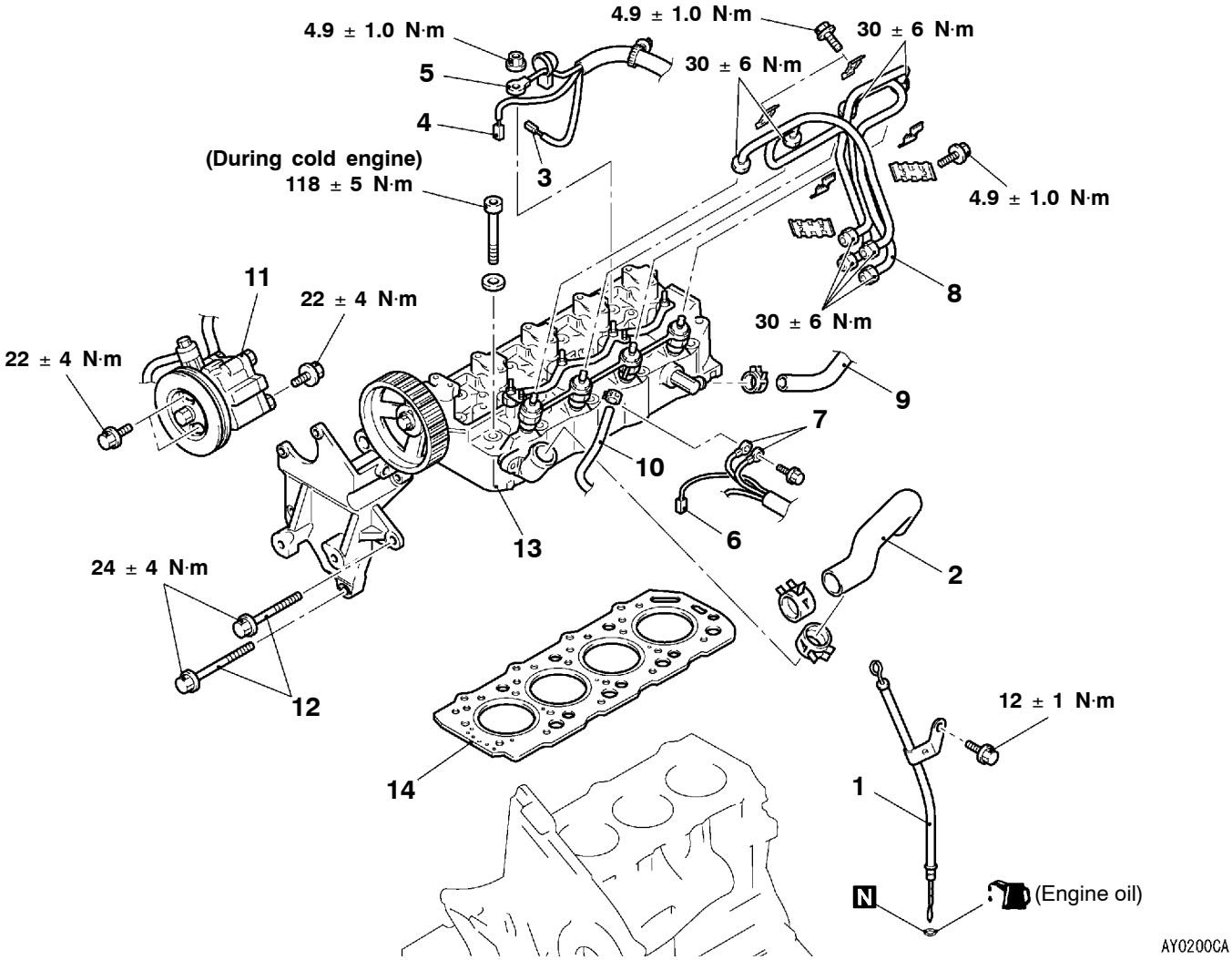


**Removal steps**

1. Oil level gauge guide and oil level gauge assembly
◀A▶ ▶D◀ 2. Radiator upper hose
- Rocker cover (Refer to P.11B-27.)

3. Engine coolant temperature switch connector (for A/C compressor control.)
4. Engine coolant temperature switch connector (for condenser fan control.)
5. Glow plug connector
6. Engine coolant temperature gauge unit and sensor connector
7. Earth cable connection
◀B▶ ▶C◀ 8. Fuel injection pipe
9. Heater hose connection
10. Fuel hose connection
- Water pipe assembly C (Refer to GROUP 14.)

◀C▶ 11. Power steering oil pump assembly
12. Power steering oil pump bracket bolt
◀D▶ ▶B◀ 13. Cylinder head assembly
▶A◀ 14. Cylinder head gasket

Purchased from www.WorkshopManuals.co.uk

www.WorkshopManuals.co.uk

## REMOVAL SERVICE POINTS

### ◀A▶ RADIATOR UPPER HOSE DISCONNECTION

After making mating marks on the radiator upper hose and the hose clamp, disconnect the radiator upper hose.

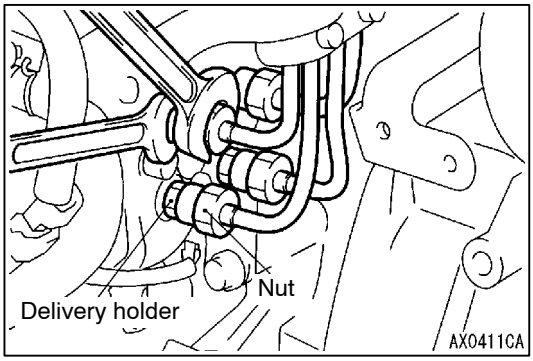


### ◀B▶ FUEL INJECTION PIPE REMOVAL

When loosening nuts at both ends of injection pipe, hold the delivery holder (for pump side) and the injection nozzle assembly (for nozzle side) with wrench and loosen nut.

**Caution**
**After disconnecting the injection pipe, plug the opening so that no foreign particles get inside the pump or into the injection nozzle.**

### ◀C▶ POWER STEERING OIL PUMP REMOVAL

Remove the power steering oil pump from the bracket with the hose attached.

NOTE
Place the removed power steering oil pump in a place where it will not be a hindrance when removing and installing the engine assembly, and tie it with a cord.

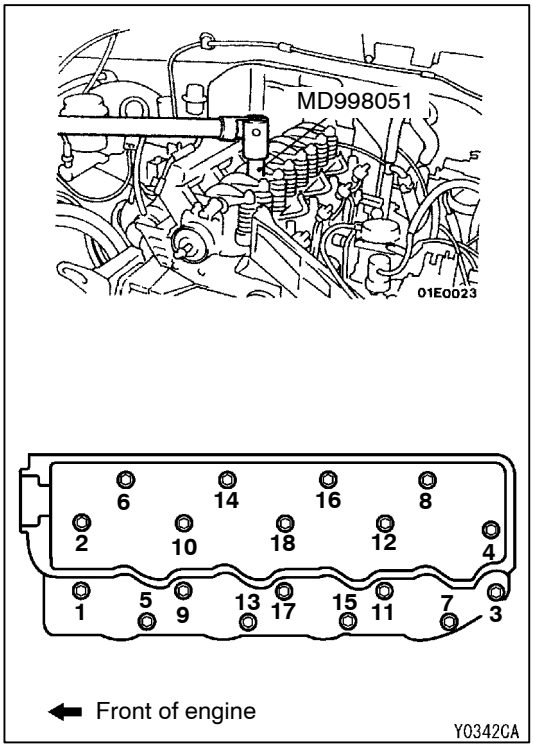


### ◀D▶ CYLINDER HEAD ASSEMBLY REMOVAL

Use the special tool to loosen the cylinder head bolts in the shown sequence progressively, and then remove the cylinder head bolts.

Purchased from www.WorkshopManuals.co.uk

www.WorkshopManuals.co.uk

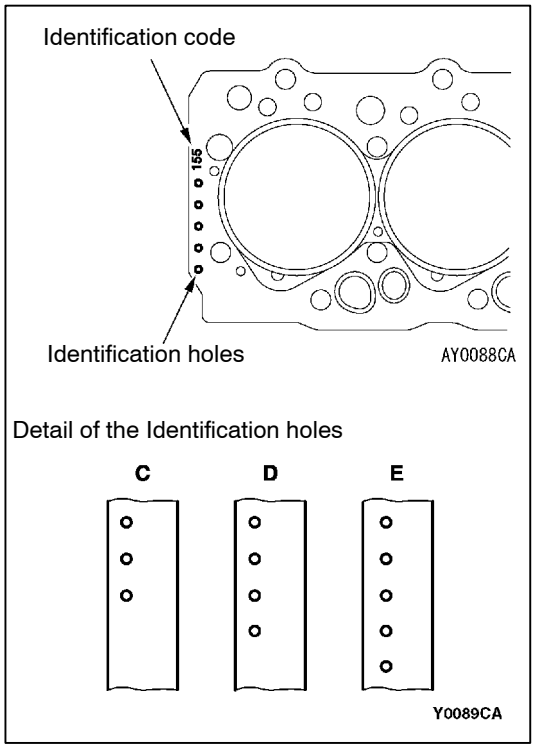


## INSTALLATION SERVICE POINTS

### ▶A◀ CYLINDER HEAD GASKET INSTALLATION

To replace the cylinder head gasket only, select a gasket of correct specification according to the table below.

| Identification holes specification | Identification code specification | Part number |
|---|---|---|
| C (Thickness after tightening the bolts 1.45 mm) | 145 | MD302891 |
| D (Thickness after tightening the bolts 1.50 mm) | 150 | MD302892 |
| E (Thickness after tightening the bolts 1.55 mm) | 155 | MD302893 |

**Caution**
**The thickness of the original cylinder head gasket is selected according to the protrusion amount of the piston. Therefore, if the piston or the connecting rod is replaced, the protrusion amount may be changed. Always select a correct gasket by measuring the protrusion amount. (For details, refer to the Engine Workshop Manual.)**

### ▶B◀ CYLINDER HEAD INSTALLATION

1. Select a cylinder head gasket of correct specification.
2. Clean the cylinder head assembly and the cylinder block mating surfaces with a scraper or a wire brush.

   **Caution**
   **Do not allow foreign material to enter the engine coolant or oil passages and the cylinder.**

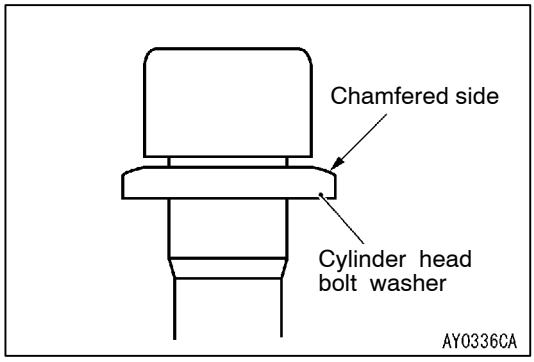


3. Install the cylinder head bolt washer to the cylinder head bolt so that the washer chamfered side faces as shown.

Purchased from www.WorkshopManuals.co.uk

www.WorkshopManuals.co.uk

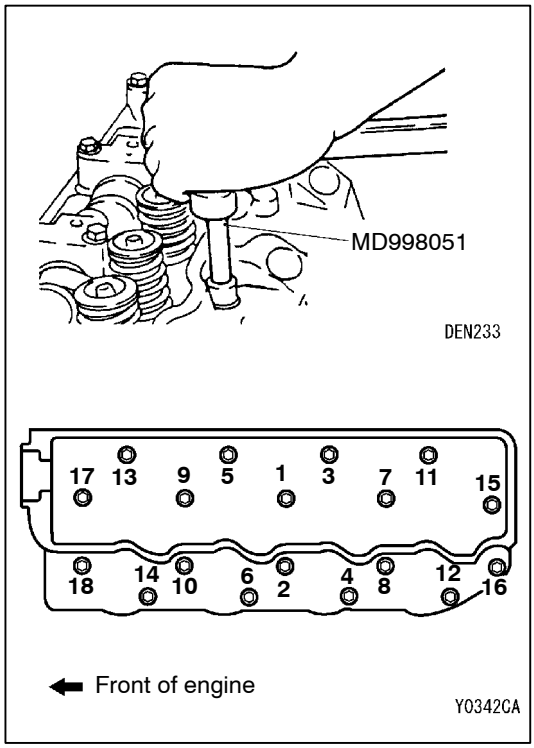


4. Use the special tool to tighten the cylinder head bolts in the shown sequence progressively, and then install the cylinder head bolts.

   **Tightening torque : 132 ± 5 N·m (During cold engine)**

**▶C◀ RADIATOR UPPER HOSE CONNECTION**

To reuse the radiator upper hose, align the mating marks that were made during removal, and then install the hose clamp.

**▶D◀ FUEL INJECTION PIPE INSTALLATION**

When tightening the nuts at both ends of the fuel injection pipe, hold the delivery holder (for pump side) and the injection nozzle assembly (for nozzle side) with a wrench, and tighten the nuts to the specified torque.

**Tightening torque: 30 ± 6 N·m**

Purchased from www.WorkshopManuals.co.uk

www.WorkshopManuals.co.uk

# ENGINE ASSEMBLY

## REMOVAL AND INSTALLATION

**Pre-removal and Post-installation Operation**
- Hood Removal and Installation (Refer to GROUP 42.)
- Under Cover and Skid Plate Removal and Installation
- Engine Oil Draining and Refilling (Refer to GROUP 12 - On-vehicle Service.)
- Battery and Battery Tray Removal and Installation
- Air Cleaner Removal and Installation (Refer to GROUP 15.)
- Radiator Removal and Installation (Refer to GROUP 14.)
- Accelerator Cable Adjustment (Refer to GROUP 17 - On-vehicle Service.) <Post-installation operation>
- Fuel Line Air-bleeding (Refer to GROUP 13B - On-vehicle Service.) <Post-installation operation>
- Drive Belt Tension Check and Adjustment <Vehicles with A/C> (Refer to P.11B-6.) <Post-installation operation>

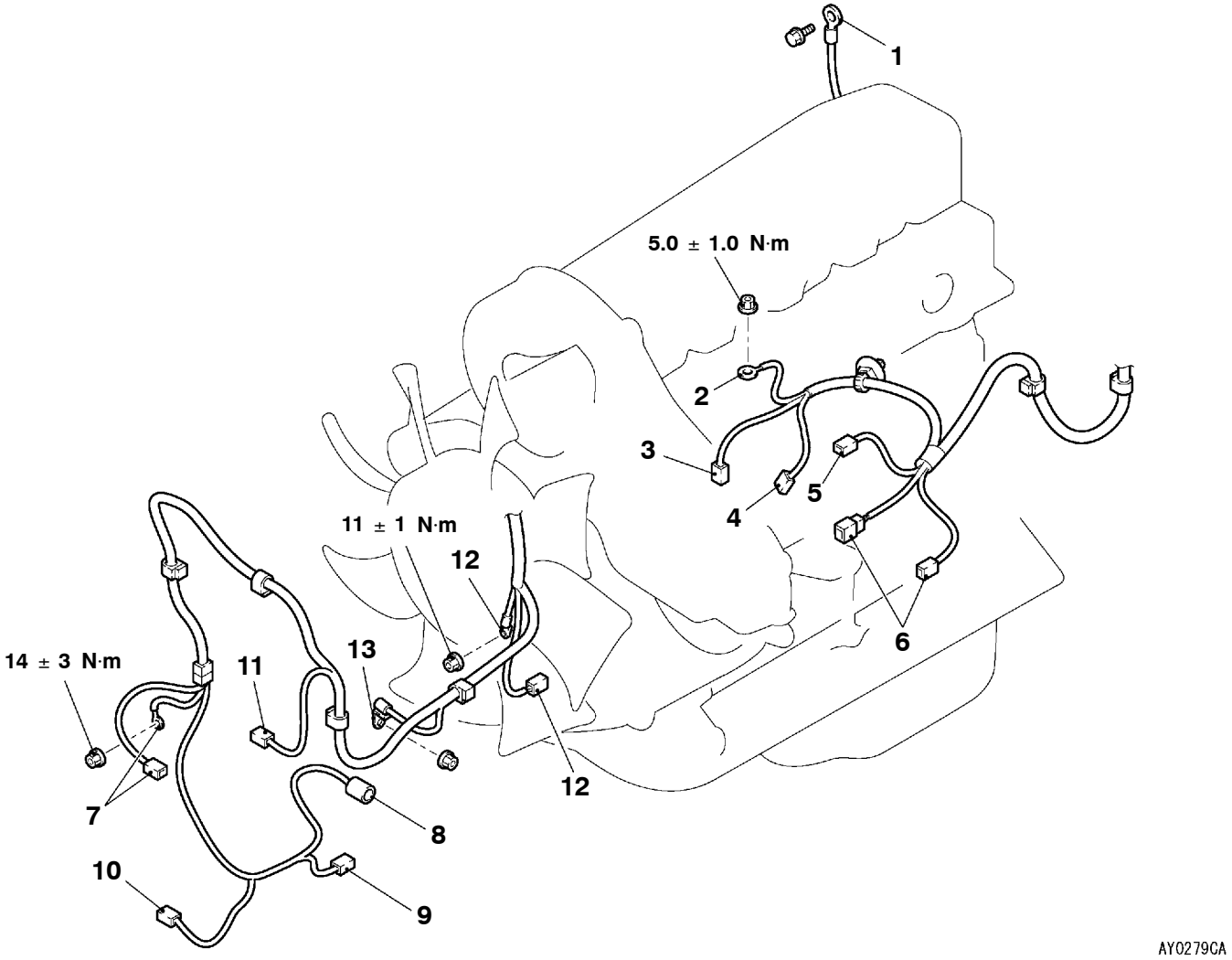


**Removal steps**
1. Earth cable connection
2. Glow plug connector
3. Engine coolant temperature switch connector (for A/C compressor control)
4. Engine coolant temperature switch connector (for condenser fan control)
5. Fuel cut solenoid valve connector
6. Injection pump connector
7. Alternator connector
8. Oil pressure switch connector
9. Engine oil level sensor connector
10. Free-wheeling hub engage switch
11. A/C compressor connector <Vehicles with A/C>
12. Starter connector
    - A/C compressor assembly <Vehicles with A/C> (Refer to P.11B-19.)
13. Earth cable connection

Purchased from www.WorkshopManuals.co.uk

www.WorkshopManuals.co.uk

**Caution**
***: indicates parts which should be temporarily tightened, and then fully tightened with the engine weight applied on the vehicle body.**

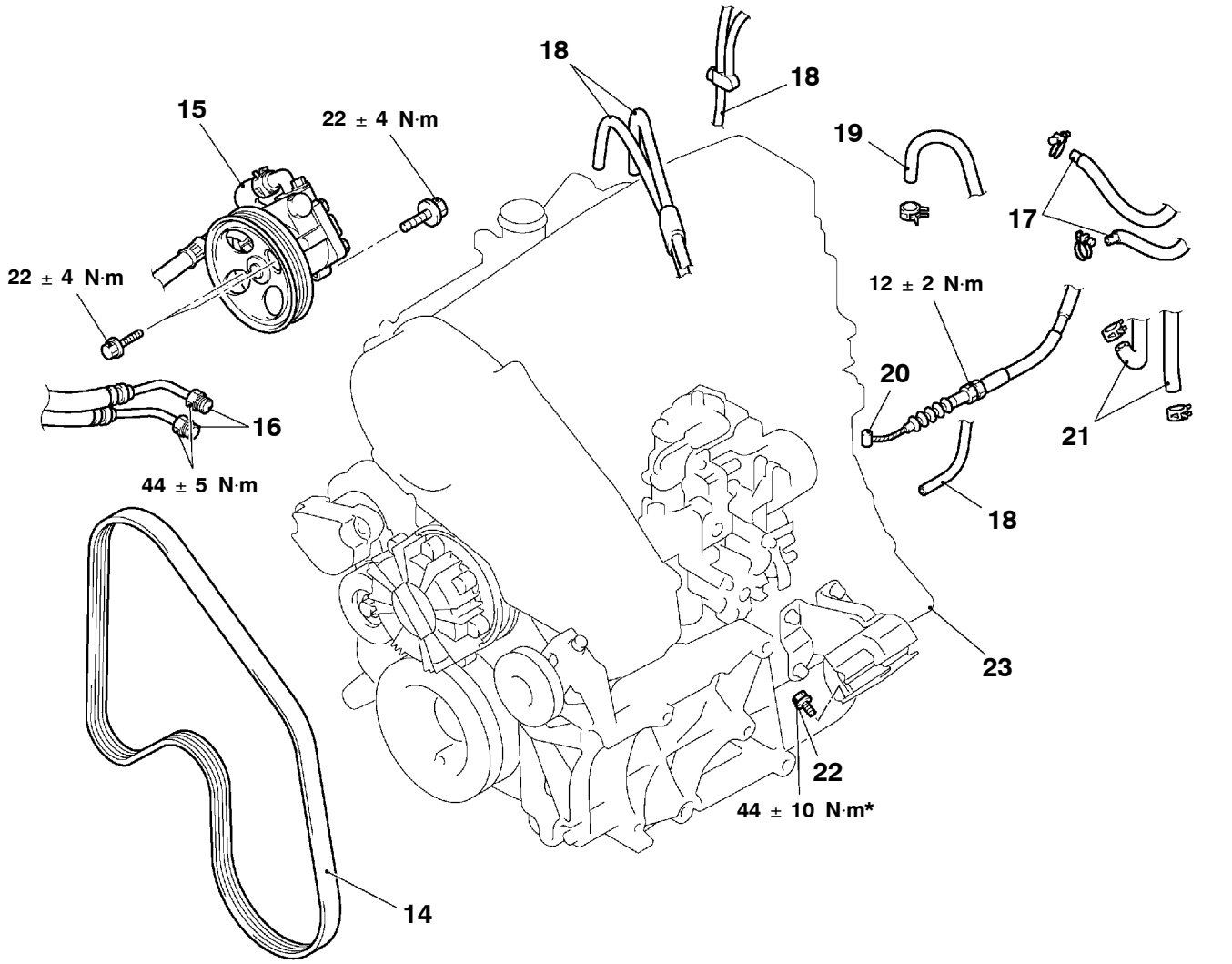


- Cooling fan
  (Refer to GROUP 14.)

◀A▶ 14. Alternator and power steering oil pump drive belt

◀B▶ 15. Power steering oil pump assembly
16. Engine oil cooler hoses connection
17. Fuel hoses connections
18. Vacuum hoses connection
19. Brake booster vacuum hose connection <Vehicles with ABS>
20. Accelerator cable connection
21. Heater hoses connection <Vehicles with A/C>
- Transmission assembly
  (Refer to GROUP 22.)

22. Engine support front insulator attaching bolt

◀C▶ ▶A◀ 23. Engine assembly

Purchased from www.WorkshopManuals.co.uk

www.WorkshopManuals.co.uk

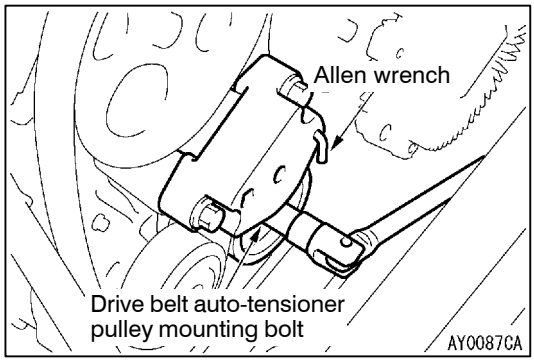


## REMOVAL SERVICE POINTS

### ◀A▶ALTERNATOR AND POWER STEERING PUMP DRIVE BELT REMOVAL

The following operations will be needed due to the introduction of the serpentine drive system with the drive belt auto tensioner.

1. Locate a ring spanner onto the drive belt auto-tensioner pulley mounting bolt, and move the tensioner clockwise until it touches the stopper.
2. Hold the tensioner by inserting an Allen wrench as shown, and remove the drive belt.

**Caution**
**To reuse the drive belt, mark its running direction (clockwise direction) on the belt back side with a chalk.**

### ◀B▶ POWER STEERING OIL PUMP ASSEMBLY REMOVAL

1. Remove the power steering oil pump assembly from the timing gear case with its hoses still attached.
2. Suspend the power steering oil pump with a cord out of the way.

### ◀C▶ ENGINE ASSEMBLY REMOVAL

1. Check that all cables, hoses, harness connectors, etc. are disconnected from the engine.
2. Lift the chain block slowly to remove the engine assembly upward from the engine compartment.

## INSTALLATION SERVICE POINT

### ▶A◀ ENGINE ASSEMBLY INSTALLATION

Install the engine assembly. When doing so, check carefully that all pipes and hoses are connected, and that none are twisted, damaged, etc.

Purchased from www.WorkshopManuals.co.uk

www.WorkshopManuals.co.uk


# ENGINE <4D5>

## CONTENTS

GENERAL . . . . . 2
Outline of Changes . . . . . 2
GENERAL INFORMATION . . . . . 2
SERVICE SPECIFICATIONS . . . . . 2
SEALANT . . . . . 2
SPECIAL TOOLS . . . . . 3
ON-VEHICLE SERVICE . . . . . 4
Injection Timing Check and Adjustment . . . . . 4
Idle Speed Check . . . . . 4
OIL PAN AND OIL SCREEN . . . . . 5
TIMING BELT AND TIMING BELT B . . . . . 7
CYLINDER HEAD GASKET . . . . . 13

Purchased from www.WorkshopManuals.co.uk

www.WorkshopManuals.co.uk

# GENERAL

## OUTLINE OF CHANGES

Some service procedures have been revised as the following changes have been made to comply to the Emission Regulation Step III.

- Injection timing and idle speed check and adjustment have bee changed as the electronic-controlled fuel injection pump has been introduced.
- The oil pan has a cover in order to reduce noise due to an enhanced engine output.
- A crank angle sensor and crankshaft sensing blade have been added due to the introduction of an electronic-controlled fuel injection pump. Due to this change, the timing belt front lower cover has been reshaped.
- The tightening torque of the cylinder head bolts and the cylinder head gasket have been changed.

# GENERAL INFORMATION

| Items | | | 4D56 |
|---|---|---|---|
| Total displacement mL | | | 2,477 |
| Bore x Stroke mm | | | 91.1 x 95.0 |
| Compression ratio | | | 21 |
| Combustion chamber | | | Vortex chamber type |
| Camshaft arrangement | | | SOHC |
| Number of valve | Intake | | 4 |
| | Exhaust | | 4 |
| Valve timing | Intake | Opening | BTDC 20° |
| | Exhaust | Closing | ABDC 49° |
| | Intake | Opening | BBDC 55° |
| | Exhaust | Closing | ATDC 22° |
| Fuel system | | | Electronically controlled type injection pump |
| Rocker arm | | | Roller type |
| Adjusting screw | | | Elephant foot type |

# SERVICE SPECIFICATIONS

| Items | Standard value |
|---|---|
| Idle speed r/min | 750 ± 30 |
| Timing belt tension mm | 4 - 5 |
| Timing belt B tension mm | 4 - 5 |

# SEALANT

| Items | Specified sealant | Remarks |
|---|---|---|
| Oil pan | MITSUBISHI GENUINE PART MD970389 or equivalent | Semi-drying sealant |

Purchased from www.WorkshopManuals.co.uk

www.WorkshopManuals.co.uk

# SPECIAL TOOLS

| Tools | Number | Name | Use |
|---|---|---|---|
| 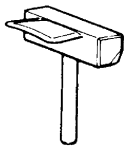 | MD998727 | Oil pan remover | Removal of oil pan |
| 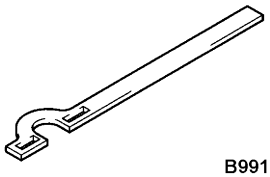 B991800 | MB991800 | Crankshaft pulley holder | Holding the crankshaft pulley |
| 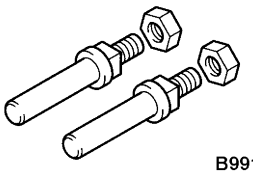 B991802 | MB991802 | Pin B | |
| 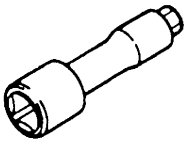 | MD998051 | Cylinder head bolt wrench | Removal and installation of the cylinder head bolt |
| 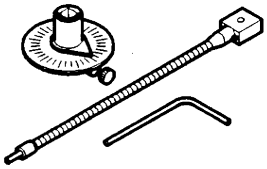 | MB991614 | Angle gauge | Tightening of the cylinder head bolts |

Purchased from www.WorkshopManuals.co.uk

www.WorkshopManuals.co.uk

# ON-VEHICLE SERVICE

## INJECTION TIMING CHECK AND ADJUSTMENT

The cold start device (wax type) has been discontinued as an electronically controlled injection pump has been used. The other inspection and adjustment procedures are the same as before.

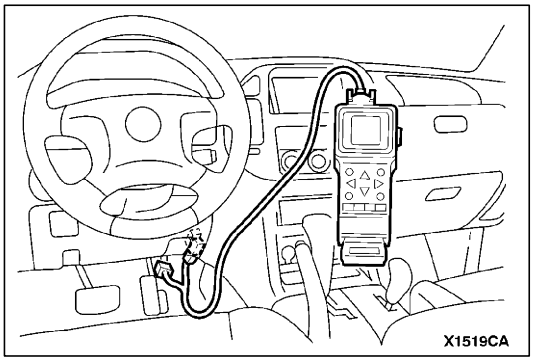


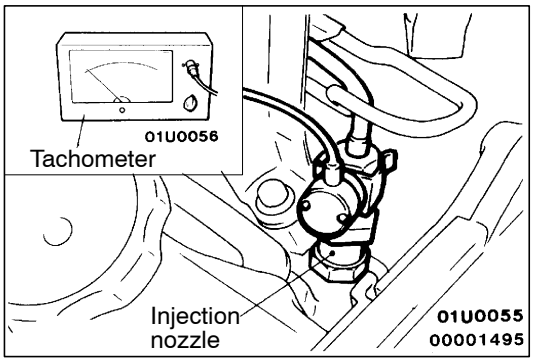


## IDLE SPEED CHECK

1. Set the vehicle to the pre-inspection condition.
2. Turn the ignition switch to “LOCK” (OFF) position, and connect the diagnosis connector to the MUT-II.
   If the MUT-II is not used, connect a tachometer to the injection nozzle or the pipe.
3. Start the engine, and let it run at idle.
4. Check the idle speed.

   **Standard value: 750 ± 30 r/min**
5. If the idle speed is not within the standard value, refer to 13C - Troubleshooting to check the electronic controlled fuel injection system.

   NOTE
   The idle speed is controlled by the engine-ECU.

Purchased from www.WorkshopManuals.co.uk

www.WorkshopManuals.co.uk

# OIL PAN AND OIL SCREEN

## REMOVAL AND INSTALLATION

**Pre-removal and Post-installation Operation**
- Skid Plate and Under Cover Removal and Installation.
- Engine Oil Draining and Supplying.
- Differential Gear Oil Draining and Supplying.
- Front Differential and No.2 Crossmember Assembly Removal and Installation.

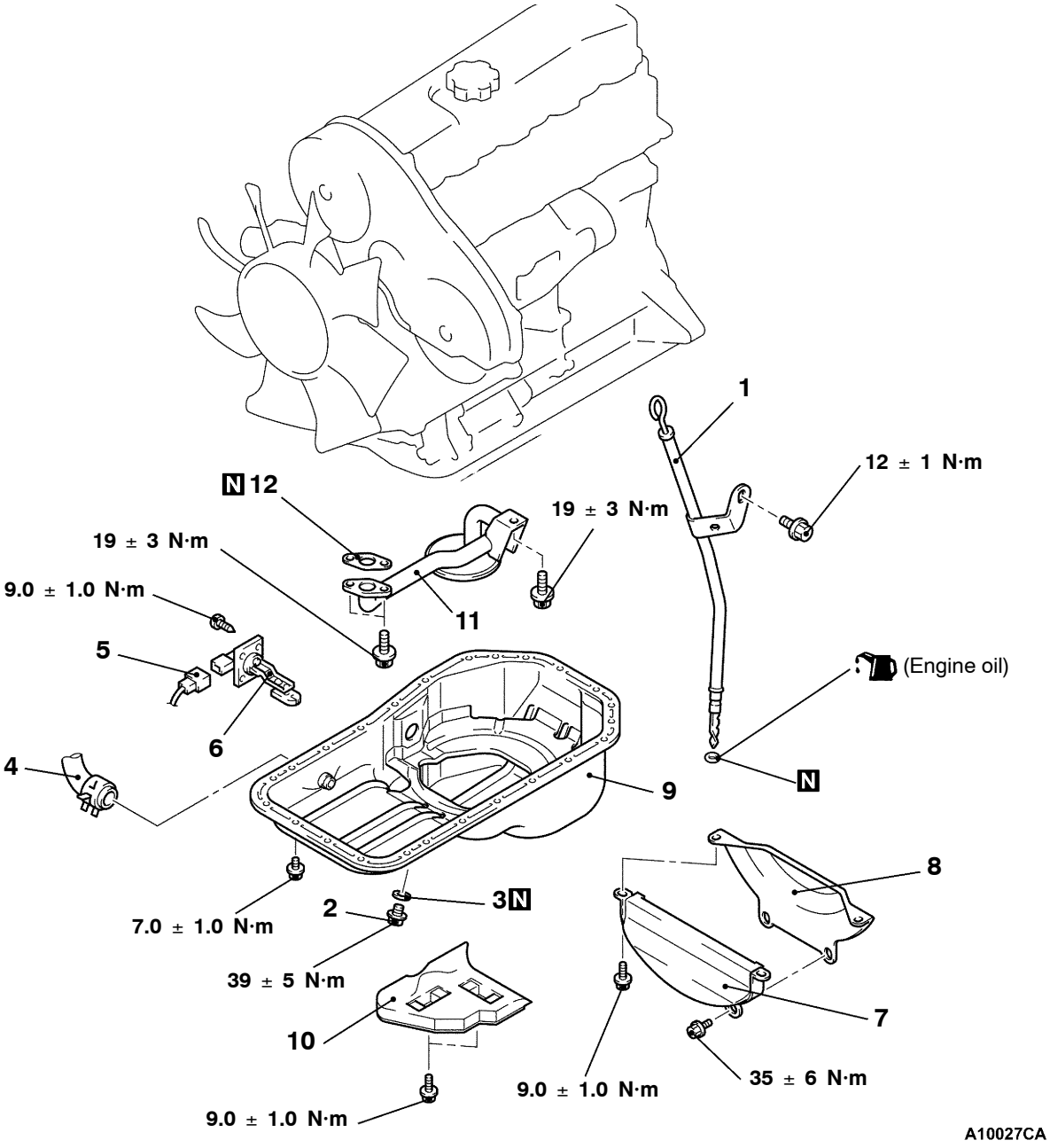


**Removal steps**

1. Engine oil level gauge and guide assembly
2. Drain plug
3. ▶B◀ Drain plug gasket
4. Alternator vacuum pump oil return hose connection
5. Oil level sensor connector
6. Oil level sensor
7. Space rubber
8. Bell housing cover
9. ◀A▶ ▶A◀ Oil pan
10. Oil pan cover
11. Oil screen
12. Oil screen gasket

Purchased from www.WorkshopManuals.co.uk

www.WorkshopManuals.co.uk

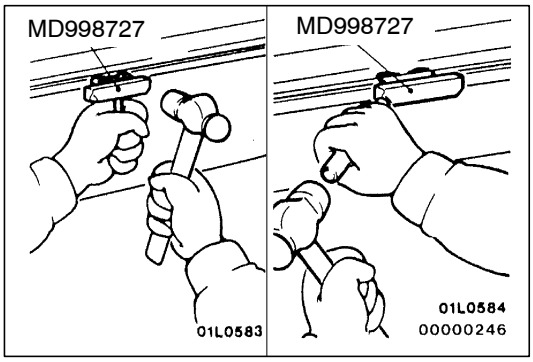


## REMOVAL SERVICE POINT

### ◀A▶ OIL PAN REMOVAL

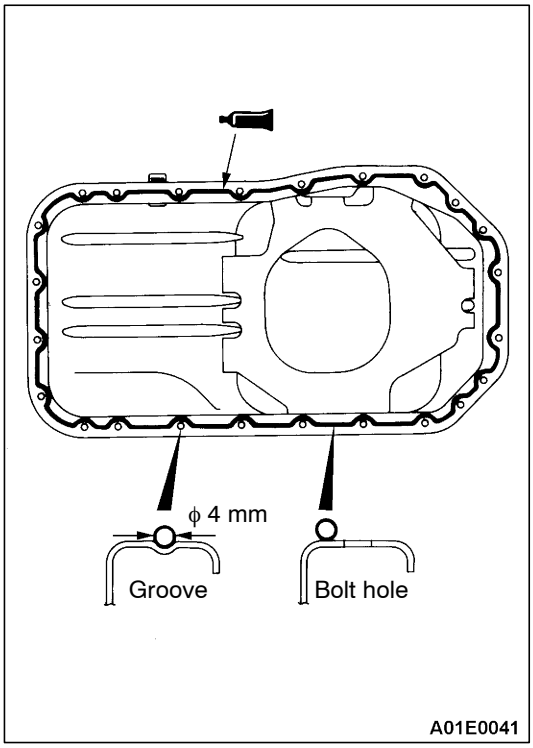


## INSTALLATION SERVICE POINTS

### ▶A◀ OIL PAN INSTALLATION

1. Remove sealant from oil pan and cylinder block mating surfaces.
2. Degrease the sealant-coated surface and the engine mating surface.
3. Apply a continuous bead of the specified sealant to the oil pan mating surface as shown.

   **Specified sealant:**
   **MITSUBISHI GENUINE PART No. MD970389 or equivalent**

   NOTE
   The sealant should be applied in a continuous bead approximately 4 mm in diameter.
4. Assemble oil pan to cylinder block within 15 minutes after applying the sealant.

   **Caution**
   **After installing the oil pan, wait at least 1 hour before starting the engine.**

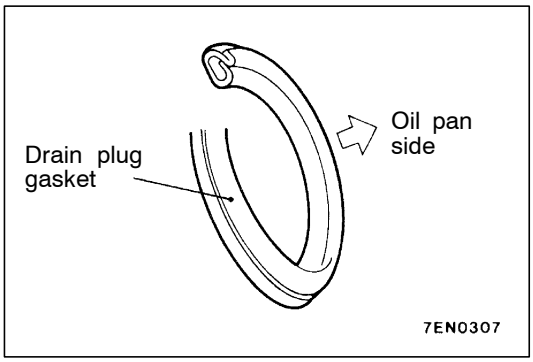


### ▶B◀ DRAIN PLUG GASKET INSTALLATION

Install a new gasket in the direction so that it faces as shown in the illustration.

## INSPECTION

- Check oil pan for cracks.
- Check oil pan sealant-coated surface for damage and deformation.
- Check oil screen for cracked, clogged or damaged wire net and pipe.

Purchased from www.WorkshopManuals.co.uk

www.WorkshopManuals.co.uk

# TIMING BELT AND TIMING BELT B

## REMOVAL AND INSTALLATION

**Post-installation Operation**
Drive Belt Tension Check and Adjustment.

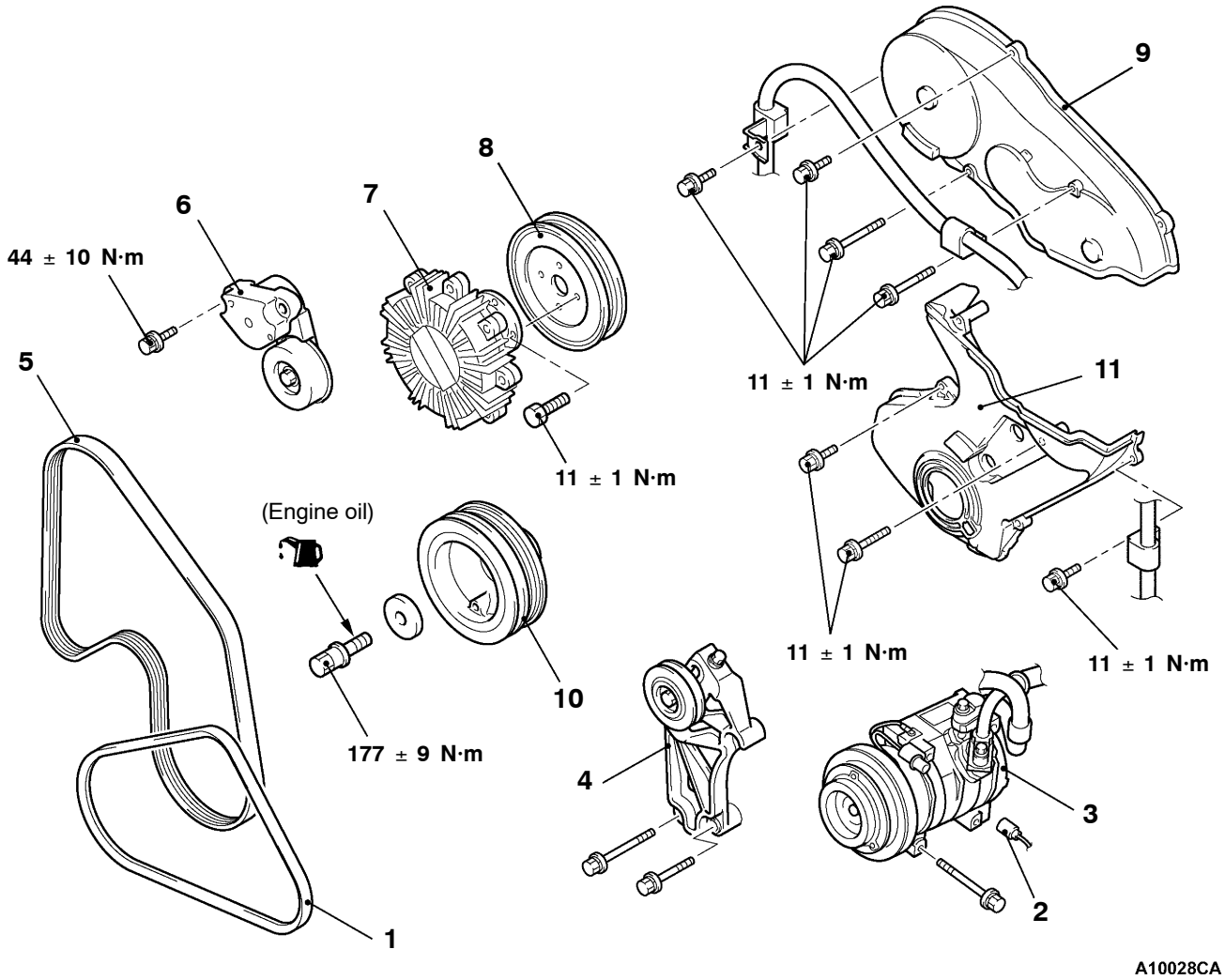


**Removal steps**

- Radiator upper shroud

◀A▶ 1. A/C compressor drive belt <Vehicles with A/C>
2. A/C compressor connector <Vehicles with A/C>

◀B▶ 3. A/C compressor <Vehicles with A/C>
4. Tension pulley and tension pulley bracket assembly <Vehicles with A/C>

- Cooling fan

◀C▶ 5. Alternator and power steering oil pump drive belt
6. Auto-tensioner
7. Fan Clutch
8. Water pump pulley

▶C◀ 9. Timing belt front upper cover

◀D▶ 10. Crankshaft pulley

▶C◀ 11. Timing belt front lower cover

Purchased from www.WorkshopManuals.co.uk

www.WorkshopManuals.co.uk

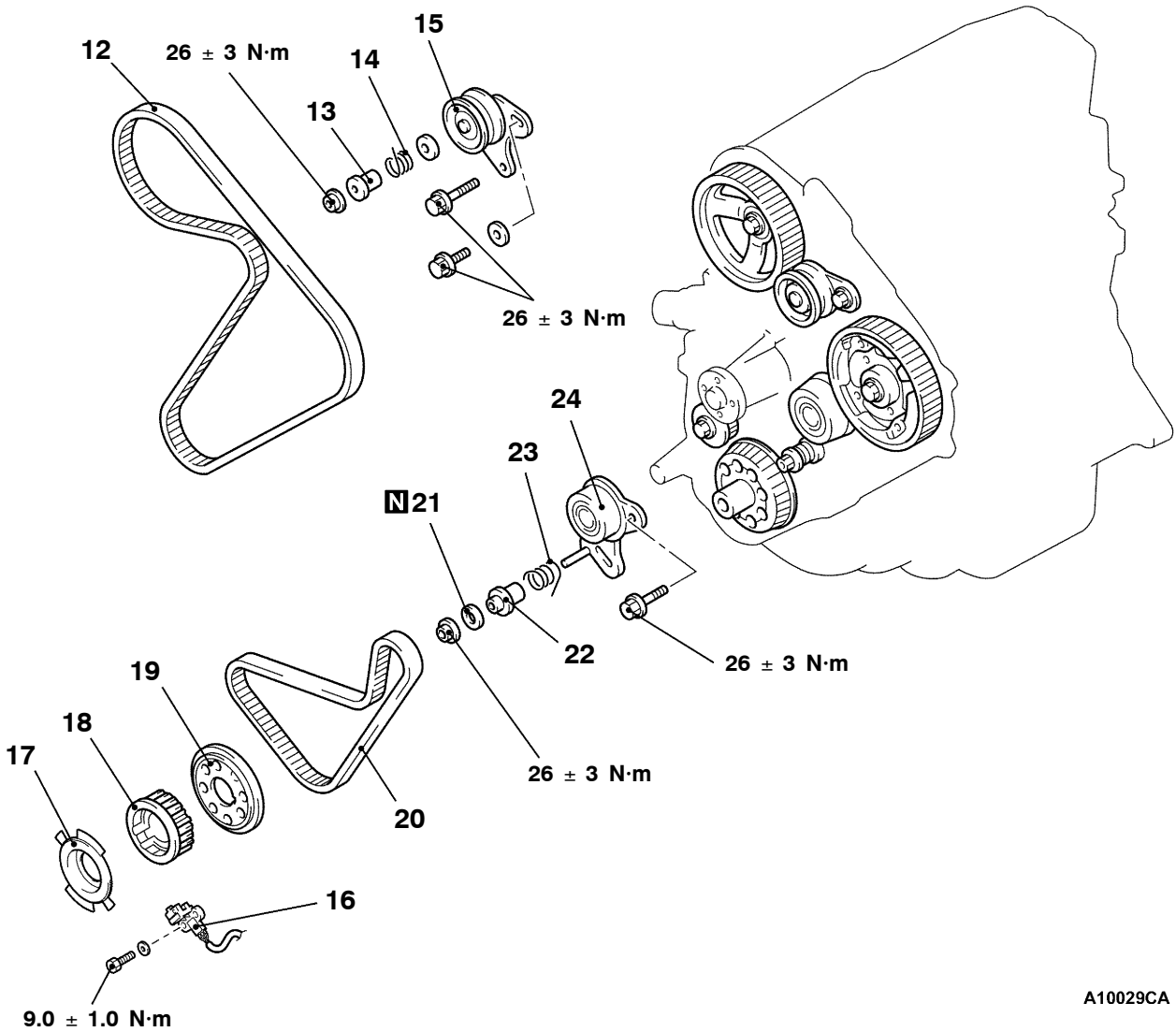


◀E▶ ▶B◀ 12. Timing belt
13. Tensioner spacer
14. Tensioner spring
15. Timing belt tensioner
16. Crank angle sensor
17. Crankshaft sensing blade
18. Crankshaft sprocket
19. Flange
◀F▶ ▶A◀ 20. Timing belt B
21. Gasket
22. Tensioner spacer B
23. Tensioner spring B
24. Timing belt tensioner B

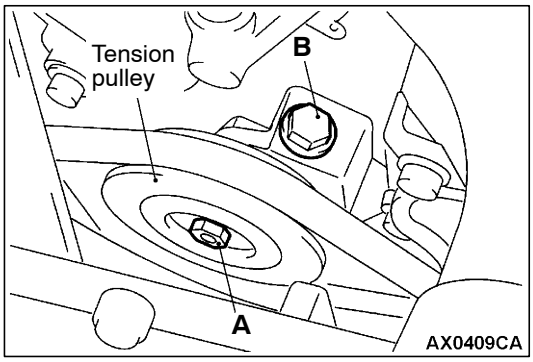


## REMOVAL SERVICE POINTS

### ◀A▶ A/C COMPRESSOR DRIVE BELT REMOVAL

1. Loosen the tension pulley securing bolt A.
2. Loose the adjusting bolt B to remove the belt.

**Caution**
**To reuse the drive belt, mark its running direction (clockwise direction) on the belt back side with a chalk.**

Purchased from www.WorkshopManuals.co.uk

www.WorkshopManuals.co.uk

### ◀B▶ A/C COMPRESSOR REMOVAL

1. Remove the A/C compressor from the bracket with its refrigerant hoses still attached.
2. Suspend the A/C compressor with a cord out of the way.

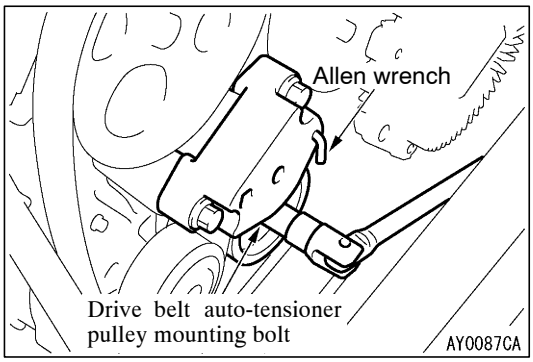


### ◀C▶ALTERNATOR AND POWER STEERING PUMP DRIVE BELT REMOVAL

The following operations will be needed due to the introduction of the serpentine drive system with the drive belt auto tensioner.

1. Locate a ring spanner onto the drive belt auto-tensioner pulley mounting bolt, and move the tensioner clockwise until it touches the stopper.
2. Hold the tensioner by inserting an Allen wrench as shown, and remove the drive belt.

**Caution**
**To reuse the drive belt, mark its running direction (clockwise direction) on the belt back side with a chalk.**

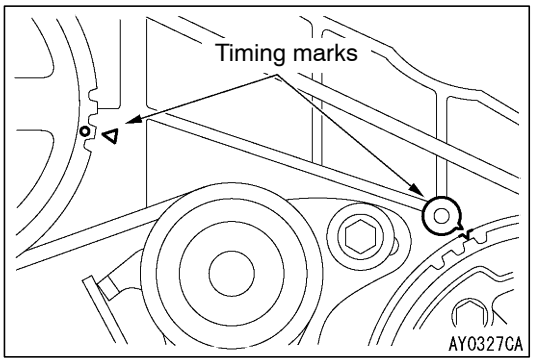


### ◀D▶ CRANKSHAFT PULLEY REMOVAL

1. Turn the crankshaft clockwise, align the timing marks to set No.1 cylinder to TDC of its compression stroke.

**Caution**
**Never turn the crankshaft anticlockwise.**

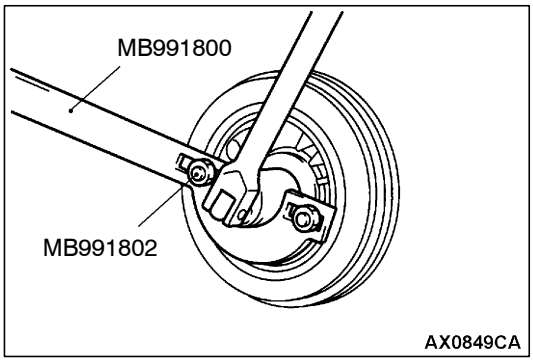


2. Use the special tool to keep crankshaft from turning and remove the bolts.

Purchased from www.WorkshopManuals.co.uk

www.WorkshopManuals.co.uk

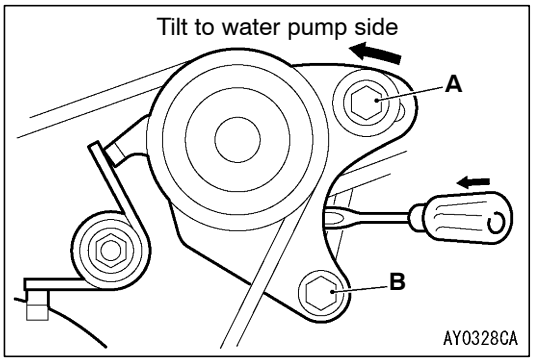


### ◀E▶ TIMING BELT REMOVAL

1. When reinstalling timing belt, mark an arrow at the belt to show rotation direction.
2. Loosen the tensioner mounting bolt A and B.
3. Push timing belt tensioner to water pump side and tighten the tensioner mounting bolt A and B. Secure so that tensioner will not move back.

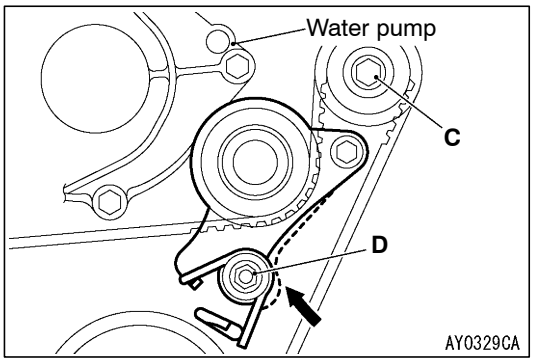


### ◀F▶ TIMING BELT B REMOVAL

1. When reinstalling timing belt B, mark an arrow at the belt to show rotation direction.
2. Loosen the tensioner mounting bolt C and nut D.
3. Push timing belt tensioner to water pump side and tighten the tensioner mounting bolt C and nut D. Secure so that tensioner will not move back.

## INSTALLATION SERVICE POINTS

### ▶A◀ TIMING BELT B INSTALLATION

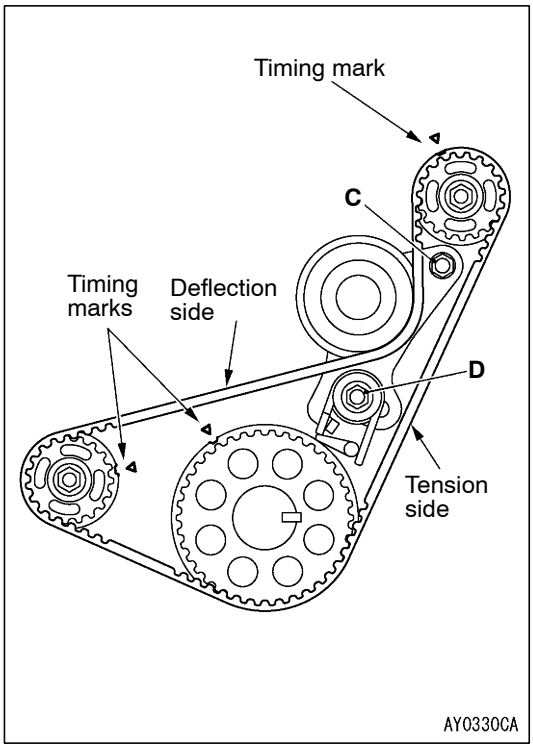


1. Align the timing marks of the 3 sprockets.
2. When reusing timing belt B, make sure the arrow mark is pointing in the same direction as when the belt was removed.
3. Install timing belt B and make sure there is no deflection on the tension side.
4. Press the deflection side of timing belt B with the hand and fully stretch the tensioner side.
5. Make sure that the timing marks are aligned.
6. Loosen the tensioner mounting bolt and nut so that only the pressure of the spring is applied to timing belt B.
7. Tighten the tensioner mounting bolt C and nut D, tightening the nut first. If the bolt is tightened first, the tensioner will move and tension the belt.

   **Tightening torque: 26 ± 3 N·m**

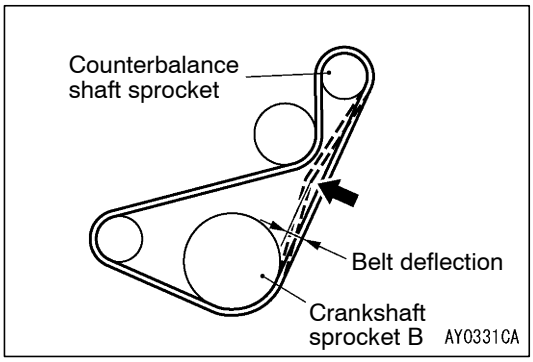


8. Press in the direction of the arrow in the figure with the index finger to check the amount of deflection.

   **Standard value: 4 - 5 mm**

Purchased from www.WorkshopManuals.co.uk

www.WorkshopManuals.co.uk

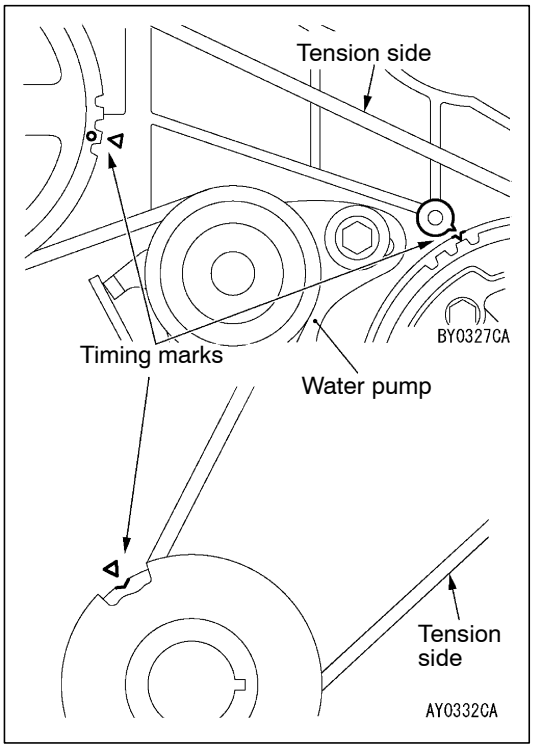


## ▶B◀ TIMING BELT INSTALLATION

1. Align the timing marks of the 3 sprockets.
2. When reusing timing belt, make sure the arrow mark is pointing in the same direction as when the belt was removed.
3. Install the timing belt to the crankshaft sprocket, to injection pump sprocket, to tensioner and to camshaft sprocket in that order. Being careful not to allow deflection on the tension side of the timing belt.

   **Caution**
   **(1) Engage the belt on the various sprockets while maintaining tension on the belt of tension side.**
   **(2) Align the injection pump sprocket with the timing mark, hold the sprocket so that is does not turn and engage the belt.**
4. Loosen the tensioner mounting bolts and apply tension with the spring.

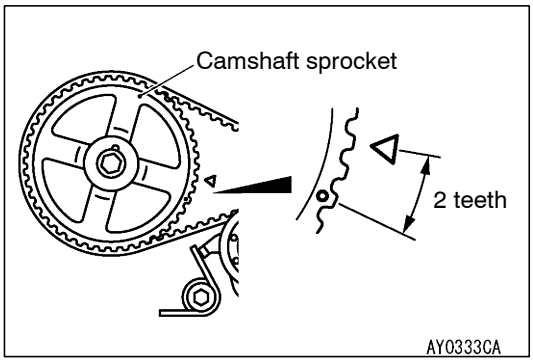


5. Turn the crankshaft clockwise and stop at the second lobe of the camshaft sprocket.

   **Caution**
   **(1) When turning the crankshaft in item (5), strictly observe the specified amount of rotation (2 teeth on the camshaft sprocket) in order to apply a constant force to the tension side of the belt.**
   **(2) Do not turn the crankshaft counterclockwise.**
   **(3) Do not touch the belt during adjustment.**

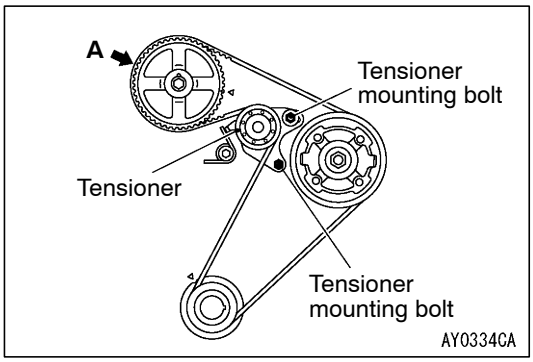


6. Make sure that the part indicated by arrow A does not float upward.
7. Tighten the tensioner mounting bolts, starting with the bolt in the elongated hole. If the lower bolt is tightened first, belt tension will become too tight.
8. Turn the crankshaft anticlockwise and align the timing mark. Next, make sure that the timing marks of all sprockets are aligned.

Purchased from www.WorkshopManuals.co.uk

www.WorkshopManuals.co.uk

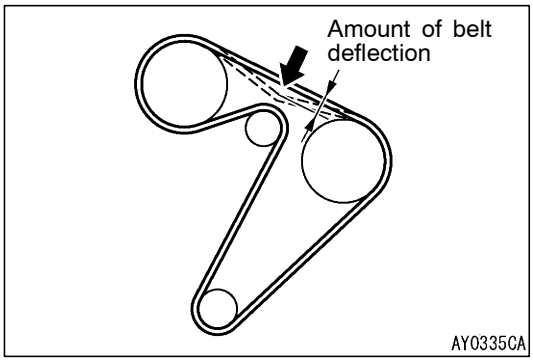


9. Press on the center of the bolt with an index finger to check the amount of deflection.

   **Standard value: 4 - 5 mm**

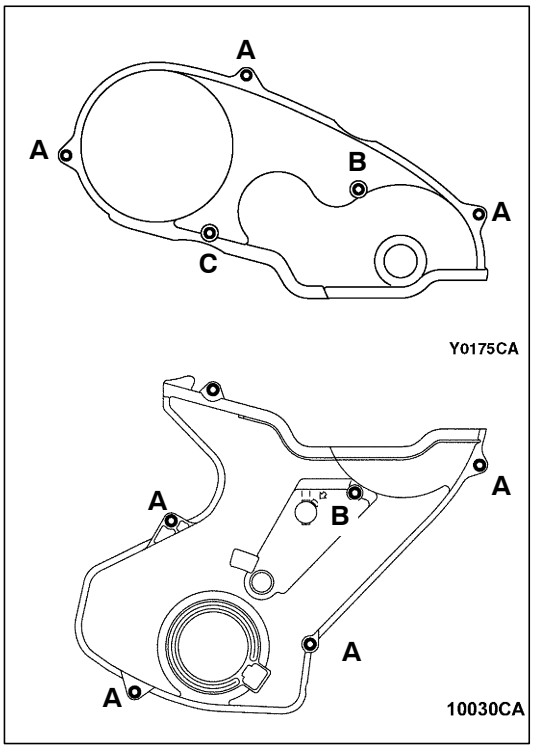


### ▶C◀ TIMING BELT FRONT LOWER COVER/TIMING BELT FRONT UPPER COVER INSTALLATION

Install the bolts to the timing belt cover at the shown positions.

| Name | Symbols | Size mm (d × l) |
|---|---|---|
| Flange bolt | A | 6 × 22 |
| | B | 6 × 50 |
| | C | 6 × 60 |

d=Nominal diameter
l=Nominal length

Purchased from www.WorkshopManuals.co.uk

www.WorkshopManuals.co.uk

# CYLINDER HEAD GASKET

## REMOVAL AND INSTALLATION

**Pre-removal and Post-installation Operation**
- Cooling Fan and Fan Clutch Assembly Removal and Installation.
- Intake Manifold Removal and Installation (Refer to GROUP15 - Intake Manifold and Exhaust Manifold, Turbocharger <4D5>.)
- Engine Oil Check and Refill.
- Fuel Line Air-bleeding.
- Timing Belt Removal and Installation (Refer to P.11B-6.)

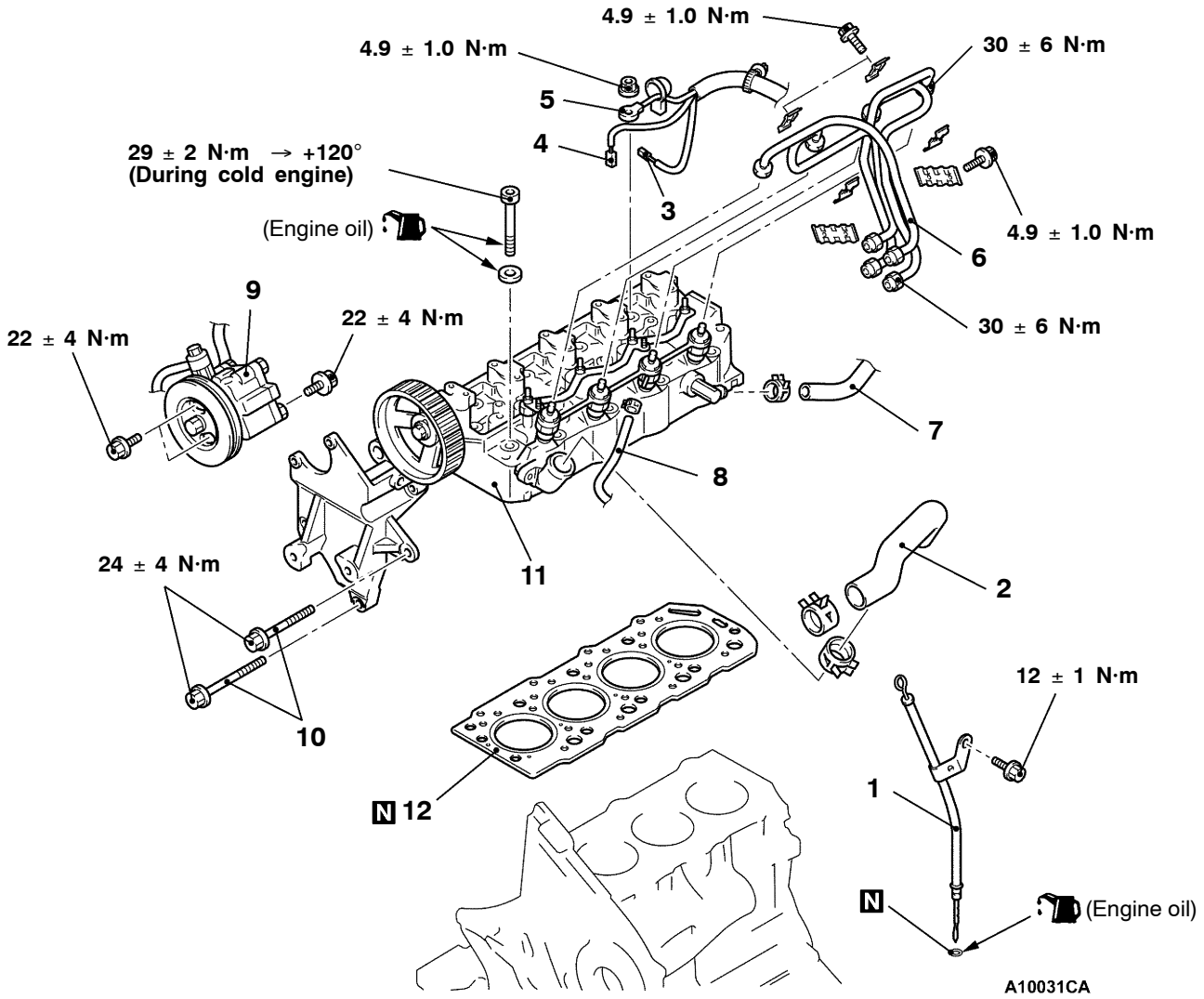


**Removal steps**

1. Oil level gauge guide and oil level gauge assembly
◀A▶ ▶D◀ 2. Radiator upper hose
- Rocker cover

3. Engine coolant temperature switch connector (for A/C compressor control)
4. Engine coolant temperature switch connector (for condenser fan control)
5. Glow plug connector
◀B▶ ▶C◀ 6. Fuel injection pipe
7. Heater hose connection
8. Fuel hose connection
- Water pipe assembly C (Refer to GROUP 14.)

◀C▶ 9. Power steering oil pump assembly
10. Power steering oil pump bracket bolt
◀D▶ ▶B◀ 11. Cylinder head assembly
▶A◀ 12. Cylinder head gasket

Purchased from www.WorkshopManuals.co.uk

www.WorkshopManuals.co.uk

## REMOVAL SERVICE POINTS

### ◀A▶ RADIATOR UPPER HOSE DISCONNECTION

After making mating marks on the radiator upper hose and the hose clamp, disconnect the radiator upper hose.

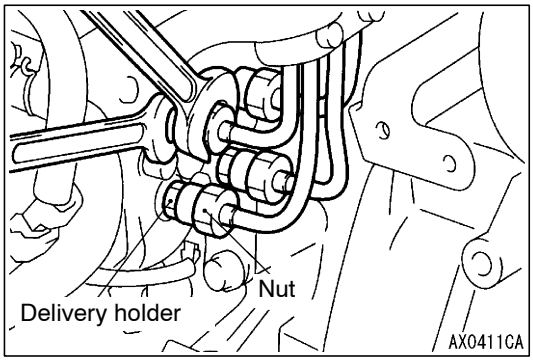


### ◀B▶ FUEL INJECTION PIPE REMOVAL

When loosening nuts at both ends of injection pipe, hold the delivery holder (for pump side) and the injection nozzle assembly (for nozzle side) with wrench and loosen nut.

**Caution**
**After disconnecting the injection pipe, plug the opening so that no foreign particles get inside the pump or into the injection nozzle.**

### ◀C▶ POWER STEERING OIL PUMP REMOVAL

Remove the power steering oil pump from the bracket with the hose attached.

NOTE
Place the removed power steering oil pump in a place where it will not be a hindrance when removing and installing the engine assembly, and tie it with a cord.

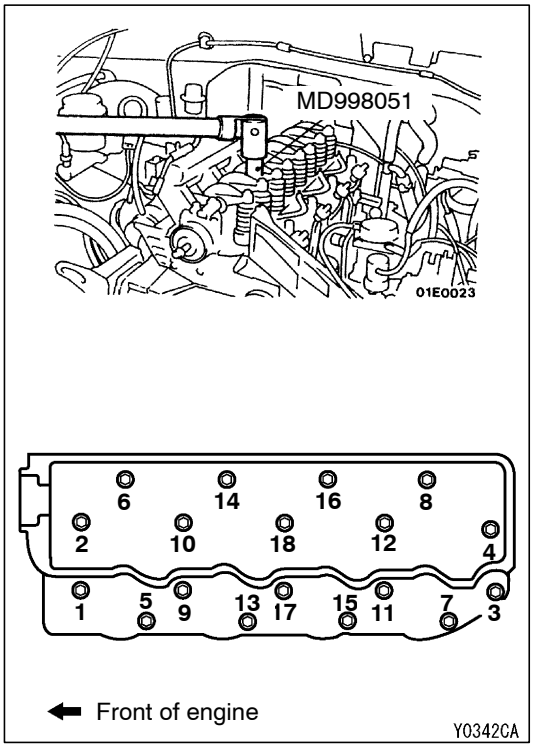


### ◀D▶ CYLINDER HEAD ASSEMBLY REMOVAL

Use the special tool to loosen the cylinder head bolts in the shown sequence progressively, and then remove the cylinder head bolts.

Purchased from www.WorkshopManuals.co.uk

www.WorkshopManuals.co.uk

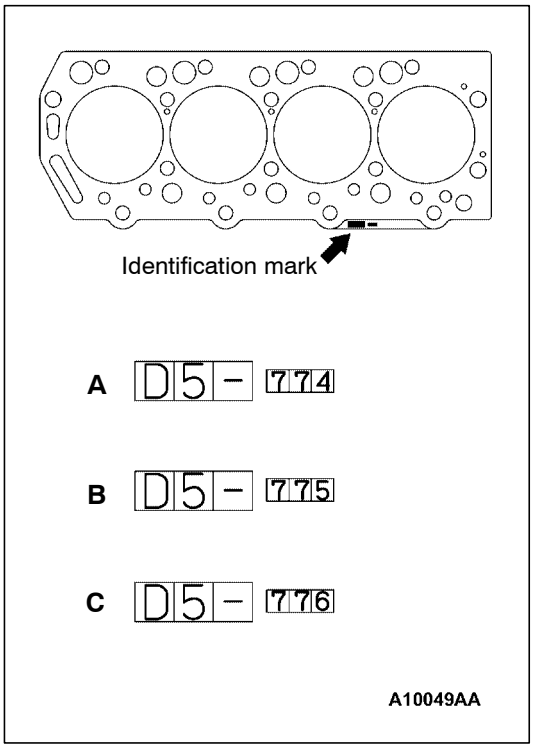


## INSTALLATION SERVICE POINTS

### ▶A◀ CYLINDER HEAD GASKET INSTALLATION

When replacing the cylinder head gasket only, confirm the gasket identification mark, and then select a replacement part according to the table below:

| Spec | Identification mark (size) | Parts number |
|---|---|---|
| A | D5-774 (fitted thickness 1.45 ± 0.04) | MD377774 |
| B | D5-775 (fitted thickness 1.50 ± 0.04) | MD377775 |
| C | D5-776 (fitted thickness 1.55 ± 0.04) | MD377776 |

**Caution**
**The thickness of the original cylinder head gasket is selected according to the protrusion amount of the piston. Therefore, if the piston or the connecting rod is replaced, the protrusion amount may be changed. Always select a correct gasket by measuring the protrusion amount. (For details, refer to the Engine Workshop Manual.)**

### ▶B◀ CYLINDER HEAD INSTALLATION

1. Select a cylinder head gasket of correct specification.
2. Clean the cylinder head assembly and the cylinder block mating surfaces with a scraper or a wire brush.

   **Caution**
   **Do not allow foreign material to enter the engine coolant or oil passages and the cylinder.**

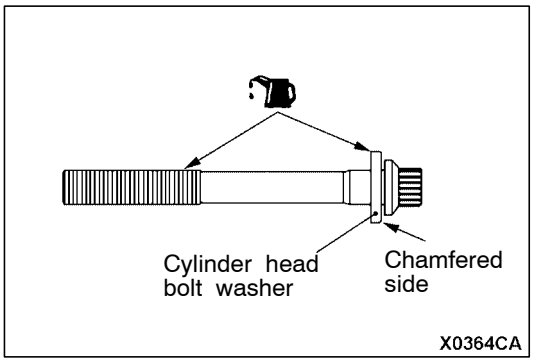


3. Install the cylinder head bolt washer to the cylinder head bolt so that the washer chamfered side faces as shown.
4. Apply a small amount of engine oil to the cylinder head bolt thread and the washer.

Purchased from www.WorkshopManuals.co.uk

www.WorkshopManuals.co.uk

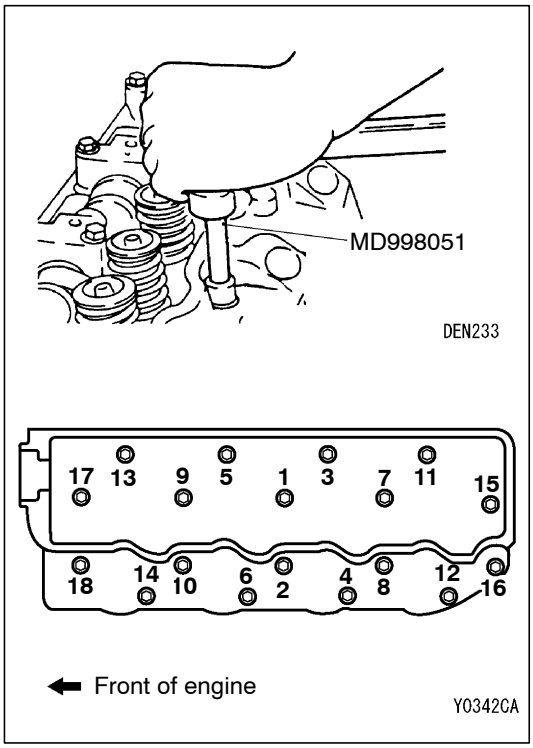


5. Tighten the cylinder head bolts according to the following procedure (angle-tightening procedure.)
   (1) Use the special tool to tighten the cylinder head bolts in the order of the illustrated numbers to 29 ± 2 N·m.

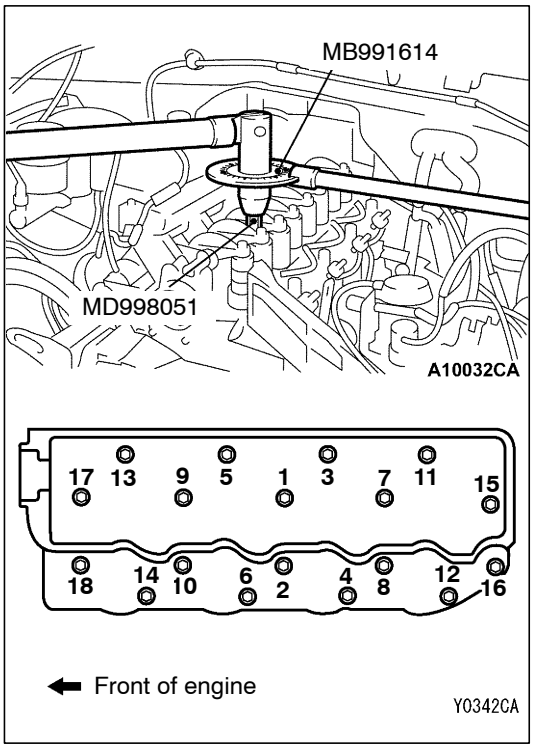


   (2) Place the special tool in a wrench to tighten the cylinder head bolt in the order of the illustrated numbers to 120°.

### ▶C◀ RADIATOR UPPER HOSE CONNECTION

To reuse the radiator upper hose, align the mating marks that were made during removal, and then install the hose clamp.

### ▶D◀ FUEL INJECTION PIPE INSTALLATION

When tightening the nuts at both ends of the fuel injection pipe, hold the delivery holder (for pump side) and the injection nozzle assembly (for nozzle side) with a wrench, and tighten the nuts to the specified torque.

**Tightening torque: 30 ± 6 N·m**

Purchased from www.WorkshopManuals.co.uk

www.WorkshopManuals.co.uk

**NOTES**

Purchased from www.WorkshopManuals.co.uk

www.WorkshopManuals.co.uk

# ENGINE <4M4>

**Click on the applicable bookmark to selected the required model year.**

Purchased from www.WorkshopManuals.co.uk

www.WorkshopManuals.co.uk


# ENGINE <4M4>

## CONTENTS

**GENERAL INFORMATION** . . . . . 2
**SERVICE SPECIFICATIONS** . . . . . 2
**SEALANTS AND ADHESIVES** . . . . . 3
**SPECIAL TOOLS** . . . . . 3
**ON-VEHICLE SERVICE** . . . . . 5
Drive Belt Tension Check and Adjustment . . . . . 5
Valve Clearance Check and Adjustment . . . . . 8
Injection Timing Check and Adjustment . . . . . 9
Idle Speed Check . . . . . 12
Compression Pressure Check . . . . . 12
**OIL PAN** . . . . . 14
**VACUUM PUMP** . . . . . 16
**TIMING CHAIN** . . . . . 17
**CRANKSHAFT OIL SEAL** . . . . . 21
**CAMSHAFT** . . . . . 23
**CYLINDER HEAD GASKET** . . . . . 27
**ENGINE ASSEMBLY** . . . . . 33

Purchased from www.WorkshopManuals.co.uk

www.WorkshopManuals.co.uk

# GENERAL INFORMATION

| Items | | | 4M41 |
|---|---|---|---|
| Total displacement mL | | | 3,200 |
| Bore × Stroke mm | | | 98.5 × 105.0 |
| Compression ratio | | | 17.0 |
| Camshaft arrangement | | | DOHC |
| Number of valve | Intake | | 8 |
| | Exhaust | | 8 |
| Valve timing | Intake | Opening | BTDC 13° |
| | | Closing | ABDC 31° |
| | Exhaust | Opening | BBDC 55° |
| | | Closing | ATDC 17° |
| Fuel system | | | Distribution type injection pump |
| Rocker arm | | | Roller type |

# SERVICE SPECIFICATIONS

| Items | | | Standard value | Limit |
|---|---|---|---|---|
| Alternator drive belt (When inspection) | Vibration frequency Hz | | 122 - 161 | – |
| | Tension N | | 207 - 363 | – |
| | Deflection mm <Reference> | | 8 - 11 | – |
| Alternator drive belt (When adjustment) | Vibration frequency Hz | | 122 - 136 | – |
| | Tension N | | 207 - 259 | – |
| | Deflection mm <Reference> | | 10 - 11 | – |
| Alternator drive belt (When replacement) | Vibration frequency Hz | | 149 - 161 | – |
| | Tension N | | 311 - 363 | – |
| | Deflection mm <Reference> | | 8 - 9 | – |
| A/C compressor drive belt (When inspection) | Vibration frequency Hz | A | 177 - 191 | – |
| | | B | 145 - 156 | – |
| | Tension N | C | 343 - 392 | – |
| | Deflection mm <Reference> | C | 7.5 - 8.5 | – |
| A/C compressor drive belt (When adjustment) | Vibration frequency Hz | A | 177 - 191 | – |
| | | B | 145 - 156 | – |
| | Tension N | C | 343 - 392 | – |
| | Deflection mm <Reference> | C | 7.5 - 8.5 | – |
| A/C compressor drive belt (When replacement) | Vibration frequency Hz | A | 177 - 191 | – |
| | | B | 145 - 156 | – |
| | Tension N | C | 490 - 539 | – |
| | Deflection mm <Reference> | C | 6.0 - 6.5 | – |

Purchased from www.WorkshopManuals.co.uk

www.WorkshopManuals.co.uk

| Items | | Standard value | Limit |
|---|---|---|---|
| Valve clearance(at cold engine) mm | Intake valve | 0.1 | – |
| | Exhaust valve | 0.15 | – |
| Injection timing | | 4°BTDC | – |
| Idle speed r/min | | 750 ± 20 | – |
| Compression pressure kPa-r/min | | 2,844-240 | 2,256-240 |
| Compression pressure difference of all cylinder kPa | | – | Maximum 294 |

NOTE
A: Between crankshaft pulley and tension pulley
B: Between crankshaft pulley and A/C compressor pulley
C: Between A/C compressor pulley and tension pulley

## SEALANTS AND ADHESIVES

| Items | Specified Sealants | Remarks |
|---|---|---|
| Oil pan cover rubber | 3M ATD Part No. 8121 or equivalent | Quick fix adhesive |
| Engine cover insulator | | |
| Contact surface between timing gear case and crankcase assembly | 3M ATD Part No. 8660 or equivalent | Semi-drying sealant |
| Oil pan | MITSUBISHI GENUINE PART MD970389 or equivalent | |
| Timing gear case | | |

## SPECIAL TOOLS

| Tool | Number | Name | Use |
|---|---|---|---|
| 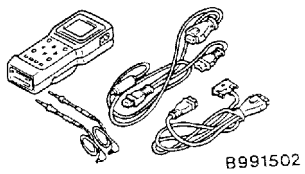  | MB991502 | MUT-II sub-assembly | ● Drive belt tension measurement<br>● Fuel injection timing check and adjustment<br>● Idle speed check |
| 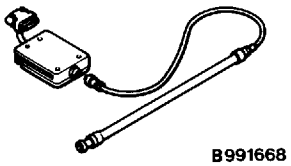  | MB991668 | Belt tension meter set | Drive belt tension measurements (Use with MUT-II) |
| 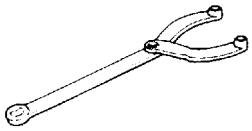 | MB990767 | Endyoke holder | Crankshaft pulley holding |
| 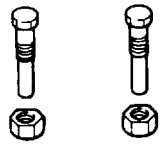 | MD998754 | Pulley holder pin | |

Purchased from www.WorkshopManuals.co.uk

www.WorkshopManuals.co.uk

| Tool | Number | Name | Use |
|---|---|---|---|
| 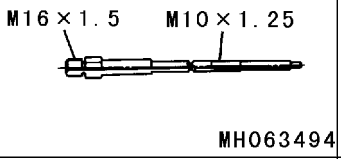 | MH063494 | Compression gauge adapter | Compression pressure check |
| 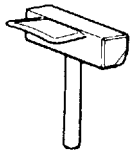 | MD998727 | Oil pan remover | Oil pan removal |
| 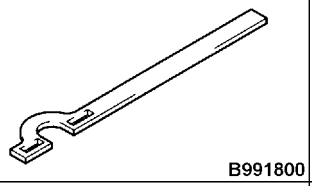 | MB991800 | Pulley holder | Crankshaft pulley holding |
| 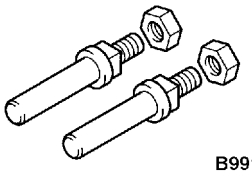 | MB991802 | Pin B | |
| 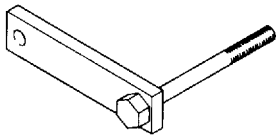 | MD998781 | Flywheel stopper | Flywheel<M/T> or drive plate<A/T> holding |
| 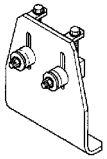 | MH063490 | Cam sprocket holder kit | Camshaft sprocket holding |

Purchased from www.WorkshopManuals.co.uk

www.WorkshopManuals.co.uk

# ON-VEHICLE SERVICE

## DRIVE BELT TENSION CHECK AND ADJUSTMENT

### ALTERNATOR DRIVE BELT TENSION CHECK AND ADJUSTMENT

1. Check the drive belt tension by the following procedures.

**Standard value:**

| Item | During inspection | During adjustment | During replacement |
|---|---|---|---|
| Vibration frequency Hz | 122 - 161 | 122 - 136 | 149 - 161 |
| Tension N | 207 - 363 | 207 - 259 | 311 - 363 |
| Deflection mm <Reference> | 8.0 - 11.0 | 10.0 - 11.0 | 8.0 - 9.0 |

**<When using MUT-II>**

(1) Connect the MUT-II to the special tool (MB991668).
(2) Connect the MUT-II to the diagnosis connector.

**Caution**
**Always turn the ignition switch to LOCK (OFF) position before disconnecting or connecting the MUT-II.**

(3) Turn the ignition switch to ON, and select the “Belt tension measurement” on the menu screen.
(4) Hold a microphone to the middle of the drive belt between the pulleys(at the place indicated by the arrow), approximately 10 - 20 mm away from the rear surface of the belt and so that it is perpendicular to the belt (within an angle of ±15°).
(5) Gently tap the middle of the belt between the pulleys (the place indicated by the arrow) with your finger as shown in the illustration, and check that the vibration frequency of the belt is within the standard value.

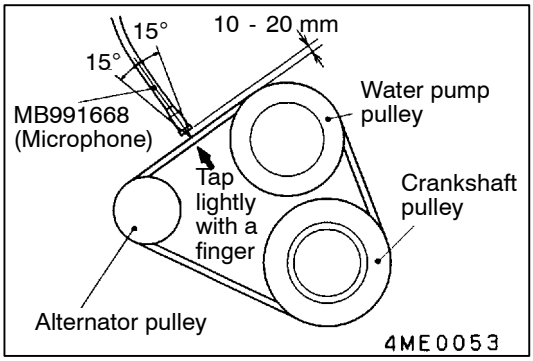


**Caution**
**1) The temperature of the surface of the belt should be as close to normal temperature as possible.**
**2) Do not allow any contaminants such as water or oil to get onto the microphone.**
**3) If strong gusts of wind blow against the microphone or if there are any loud sources of noise nearby, the values measured by the microphone may not correspond to actual values.**
**4) If the microphone is touching the belt while the measurement is being made, the values measured by the microphone may not correspond to actual values.**
**5) Do not take the measurement while the vehicle’s engine is running.**

Purchased from www.WorkshopManuals.co.uk

www.WorkshopManuals.co.uk

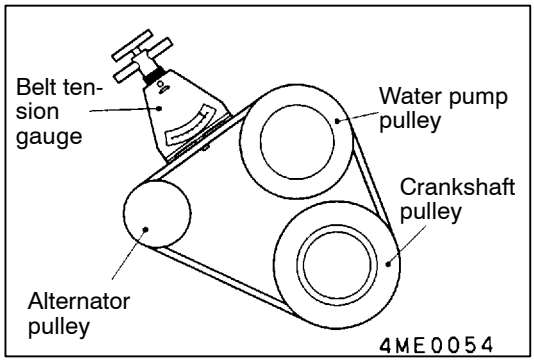


**<When using a tension gauge>**
Use a belt tension gauge to check that the belt tension is within the standard value.

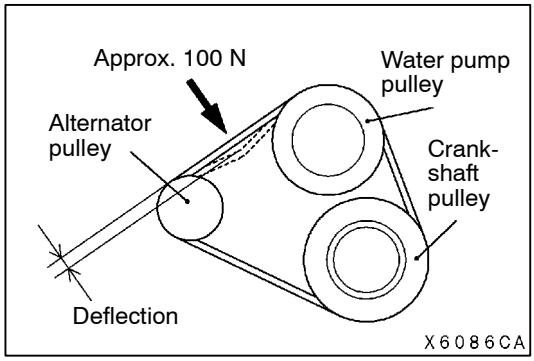


**<When checking the deflection>**
Apply approx. 100 N of force to the middle of the drive belt between the pulleys (at the place indicated by the arrow) and check that the amount of deflection is within the standard value.

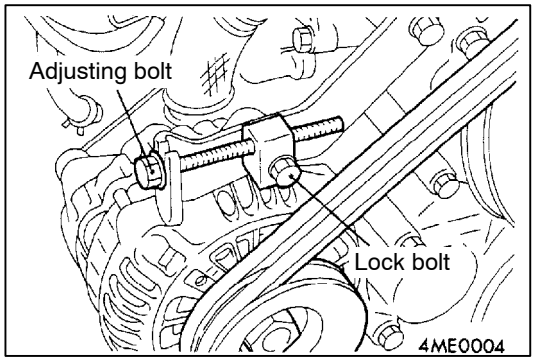


2. If not within the standard value, adjust the belt tension by the following procedure.
   (1) Loosen the pivot nut.
   (2) Loosen the lock bolt.
   (3) Turn the adjusting bolt to adjust the belt deflection.
   (4) Tighten the lock bolt and pivot nut to the specified torque.
   (5) Crank the engine clockwise one turn or more, and then check the belt tension.

   **Caution**
   **These V belts must always be replaced as a set, being careful to keep them clear of oil or grease.**

Purchased from www.WorkshopManuals.co.uk

www.WorkshopManuals.co.uk

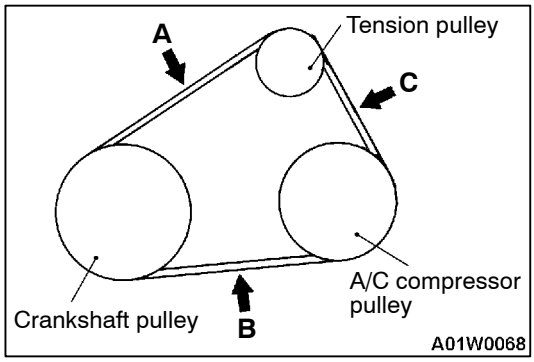


**A/C compressor drive belt tension check and adjustment<Vehicles with A/C>**

1. Check the drive belt tension by the following procedures.

**Standard value:**

| Item | | During inspection | During adjustment | During replacement |
|---|---|---|---|---|
| Vibration frequency Hz | A | 177 - 191 | 177 - 191 | 177 - 191 |
| | B | 145 - 156 | 145 - 156 | 145 - 156 |
| Tension N | C | 343 - 392 | 343 - 392 | 490 - 539 |
| Deflection mm <Reference> | C | 7.5 - 8.5 | 7.5 - 8.5 | 6.0 - 6.5 |

**<When using MUT-II>**
Gently tap the center of the belt between the pulleys (arrows A and B), and check that the belt vibration frequency is within the standard value.

NOTE
For the vibration frequency measurement using the MUT-II, refer to P.11C-5.

**<When using a tension gauge>**
Place a belt tension gauge at the center between the pulleys (arrow C) to check the belt tension is within the standard value.

**<When checking the deflection>**
Apply approx. 100 N of pressure against the location between the pulleys shown by the arrow C in the illustration and then measure the deflection.

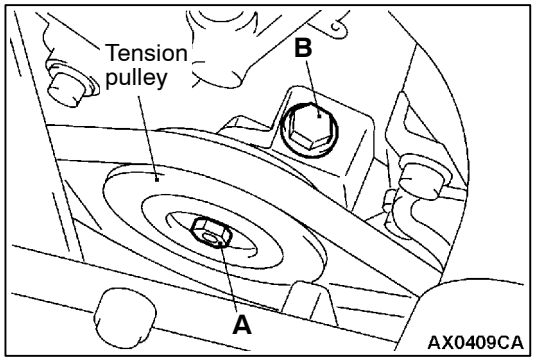


2. If not within the standard value, adjust the belt tension by the following procedure.
   (1) Loosen the tension pulley securing bolt A.
   (2) Use the adjusting bolt B to adjust the belt deflection.
   (3) Tighten the securing bolt A to the specified torque.

   **Tightening torque: 44 ± 10 N·m**

   (4) Check the belt tension, and readjust if necessary.

   **Caution**
   **When checking the belt tension, turn the crankshaft clockwise one turn or more.**

Purchased from www.WorkshopManuals.co.uk

www.WorkshopManuals.co.uk

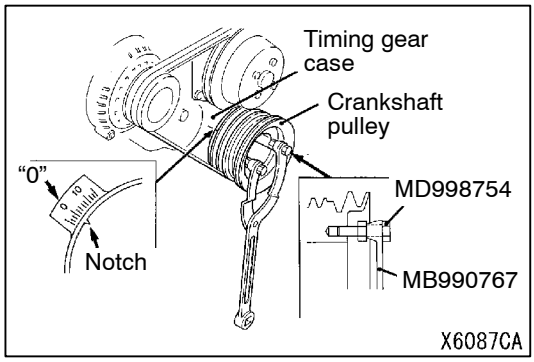


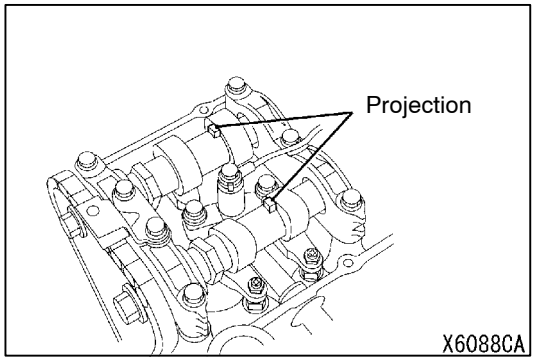


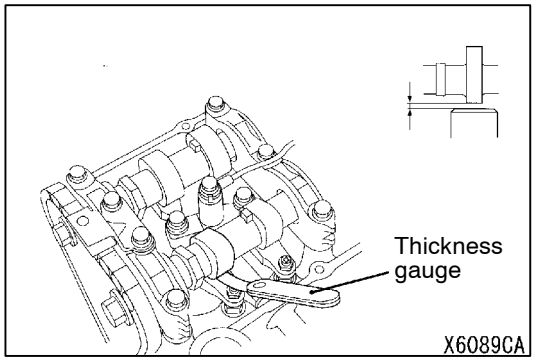


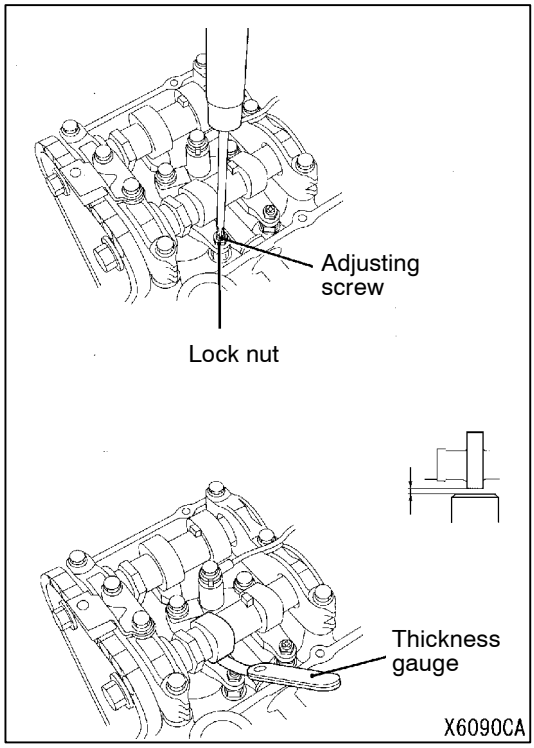


## VALVE CLEARANCE CHECK AND ADJUSTMENT

NOTE
The valve clearance check and adjustment should be done when the engine is cold.

1. Remove the rocker cover.
2. Remove all the glow plugs.
3. Use the special tool to turn the crankshaft clockwise, and align the notch on the crankshaft pulley with timing mark "0" to set the No.1 cylinder or No.4 cylinder to the top dead centre of its compression stroke.

   **Caution**
   **Never turn the crankshaft anticlockwise, or the tensioner for adjusting the timing chain tension at the timing gear can be damaged.**
   **If it is turned anticlockwise, once remove the tensioner and reinstall.**

   NOTE
   If the projection on the camshaft faces up, the No.1 cylinder is on the top dead centre of its compression stroke .When the crankshaft is turned just one more turn, the No.4 cylinder is at top dead centre.

4. When the No.1 or No.4 piston is on the top dead centre of its compression stroke, use a thickness gauge to measure the valve clearance indicated by the circle in the table below.

   **When the No.1 cylinder is at compression top dead centre:**

| Cylinder No. | 1 | 2 | 3 | 4 |
|---|---|---|---|---|
| Intake | ○ | ○ | - | - |
| Exhaust | ○ | – | ○ | – |

   **When the No.4 cylinder is at compression top dead centre:**

| Cylinder No. | 1 | 2 | 3 | 4 |
|---|---|---|---|---|
| Intake | – | – | ○ | ○ |
| Exhaust | – | ○ | – | ○ |

   **Standard value:**
   **Intake side 0.1 mm**
   **Exhaust side 0.15 mm**

   NOTE
   If the thickness gauge is inserted and pulled out with resistance, its reading will be accurate.
   If the thickness gauge can be inserted and pulled out smoothly without resistance, its reading will be inaccurate.

5. If not at the standard value, adjust by the following procedure.
   (1) Loosen the lock nut, and tighten the adjusting screw so that the thickness gauge can be passed with a slight drag.

Purchased from www.WorkshopManuals.co.uk

www.WorkshopManuals.co.uk

(2) After adjustment, tighten the lock nut to the specified torque while preventing the adjusting screw from turning with a screwdriver.

**Tightening torque: 9.5 ± 0.5 N·m**

(3) Measure the valve clearance again, and check that it is at the standard value.

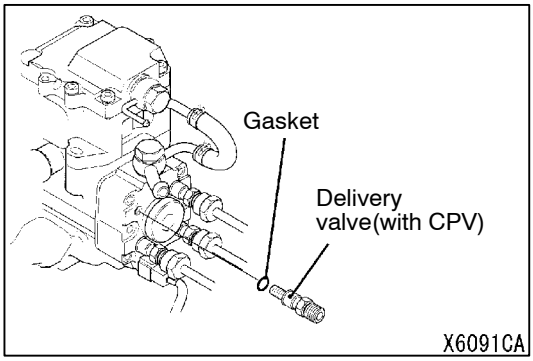


## INJECTION TIMING CHECK AND ADJUSTMENT

1. Warm up the engine.
2. Remove all the glow plugs.
3. Remove the No.1 cylinder delivery valve (with CPV) and gasket of the injection pump.

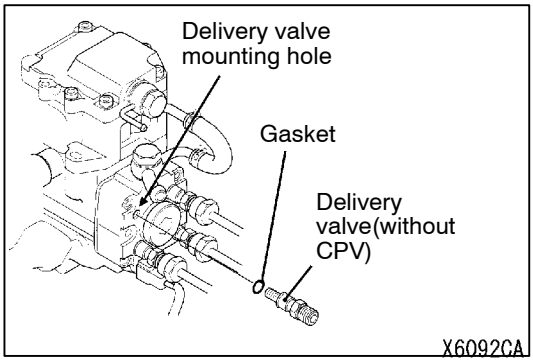


4. Install the gasket (ME741133) and delivery valve(without: MH063483) to the injection pump delivery valve mounting hole, and tighten them to the specified torque.

   **Tightening torque: 49 ± 5 N·m**

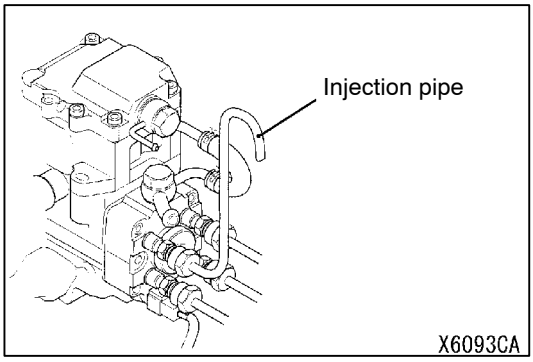


5. Install an old the auxiliary injection pipe to the delivery valve. Cut out the open end of the injection pipe, and bend it down so as to observe the fuel flow.

Purchased from www.WorkshopManuals.co.uk

www.WorkshopManuals.co.uk

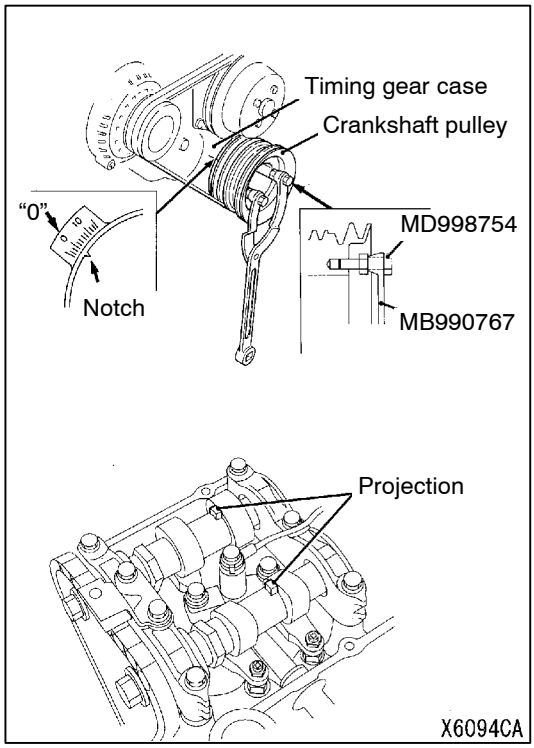


6. Use the special tool to turn the crankshaft clockwise, align the notch on the crankshaft pulley with the "0" timing mark to set the No.1 cylinder to the top dead centre of its compression stroke.

   **Caution**
   **Never turn the crankshaft anticlockwise, or the tensioner for adjusting the timing chain tension at the timing gear can be damaged. If it is turned anticlockwise, once remove it and reinstall.**

   NOTE
   Remove the filler cap, and check the camshaft condition. If the camshaft projection faces up, the No.1 cylinder is on top dead centre of its compression stroke.
7. Turn the crankshaft pulley clockwise, and set the No.1 cylinder to before top dead centre 30° of its compression stroke.

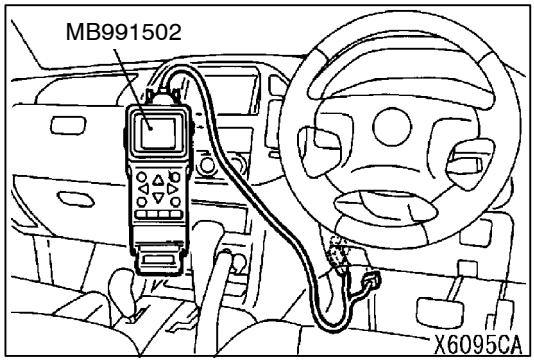


8. Turn the ignition switch to "LOCK"(OFF), and connect the diagnosis connector to the MUT-II.
9. Turn the ignition switch ON.
10. Carry out the actuator test (No.34) on MUT-II.

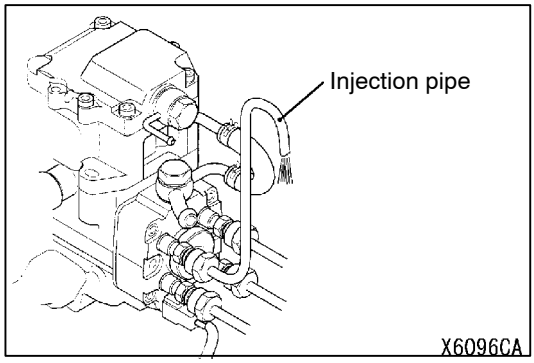


11. Supply the fuel by operating the fuel filer hand pump,and turn the engine clockwise while allowing the fuel to flow through the injection pipe.

Purchased from www.WorkshopManuals.co.uk

www.WorkshopManuals.co.uk

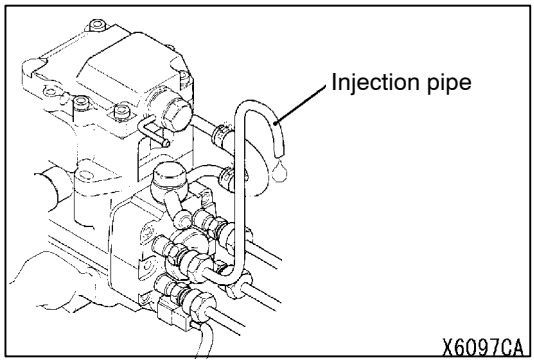


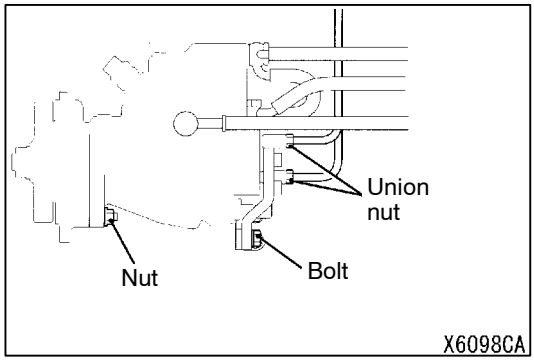


12. If the fuel flow through the injection pipe decreases, turn the engine more slowly. Then stop turning the engine when the fuel flow stops completely. Check the fuel injection timing during this condition.

    **Standard value: 4° BTDC**
13. If not at the standard value, adjust by the following procedure.
    (1) Loose the fuel injection pipe union nut, the injection pump securing bolt and nut in that order.

    **Caution**
    **a. When the union nut is loosened, use a open end wrench to prevent the delivery valve holder from rotating with it.**
    **b. Do not remove the bolt and nut at this time.**

    (2) Tile the injection pump housing to the left or the right to adjust.
    (3) Tile the injection pump mounting nut and bolt temporarily.
    (4) Repeat steps 9 - 12 to check that the injection timing is correct.
    (5) Tile the injection pump mounting nut and bolt securely.
    (6) Loose the fuel injection pipe union nut securely.

    **Caution**
    **Hold the delivery pipe holder with a open end wrench when tightening the union nut.**
14. Remove the special tool.
15. Install the delivery valve (with CPV) and the new gasket.
16. Install the glow plugs.

Purchased from www.WorkshopManuals.co.uk

www.WorkshopManuals.co.uk

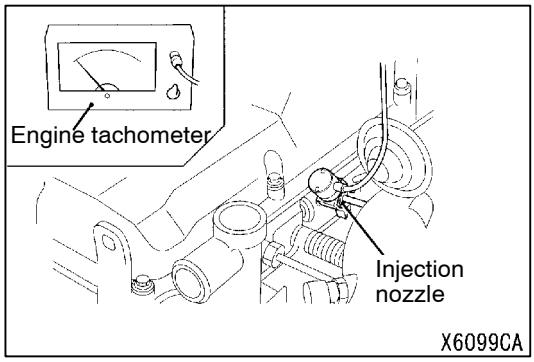


## IDLE SPEED CHECK

1. Set the vehicle to the pre-inspection condition.
2. Turn the ignition switch to LOCK (OFF) position, and connect the diagnosis connector to the MUT-II.
   If the MUT-II is not used, connect an engine tachometer to the injection nozzle or the pipe.
3. Start the engine, and let it run at idle.
4. Check the idle speed.

   **Standard value: 750 ± 20 r/min**
5. If the idle speed is not within the standard value, refer to 13C - Troubleshooting to check the electronic controlled fuel injection system.

   NOTE
   The idle speed is controlled by the engine-ECU.

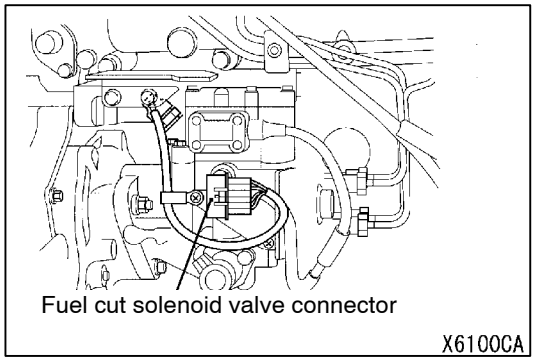


## COMPRESSION PRESSURE CHECK

1. Check that the engine oil,the starter motor and the battery is in good condition. In addition,set the vehicle to the pre-inspection condition.
2. Remove all the glow plugs.
3. Disconnect the fuel cut solenoid valve connector.

   NOTE
   Doing this will prevent carrying out fuel injection.
4. Plug the glow plug mounting holes with a shop towel, crank the engine, and then check that the shop towel is not contaminated with foreign material.
   **Caution**
   **1) Keep away from the glow plug mounting holes when cranking the engine.**
   **2) If compression is measured with water, oil, fuel, etc., that has come from cracks inside the cylinder these materials will become heated and will gush out from the glow plug holes, which is dangerous.**

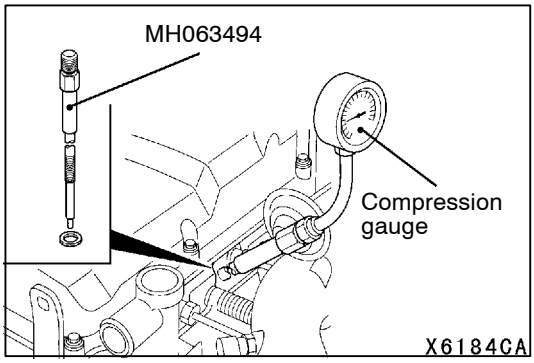


5. Install the special tool to the glow plug mounting holes, and install the compression gauge.
6. Measure the compression pressure while cranking the engine.

   **Standard value: 2844 kPa – 240 r/min**
   **Limit value: 2256 kPa – 240 r/min**
7. Measure the compression pressure for all the cylinders and check that the pressure differences of the cylinders are below the limit.

   **Limit: 294 kPa in maximum**

Purchased from www.WorkshopManuals.co.uk

www.WorkshopManuals.co.uk

8. If there is a cylinder which compression or compression difference is outside the limit, pour a small amount of engine oil through the glow plug hole, and repeat the operations in steps 6 - 7.
   (1) If the compression increases after the oil is added, the cause of the malfunction is a worn or damaged piston ring and /or cylinder inner surface.
   (2) If the compression does not rise after the oil is added, the cause is a burnt or defective valve seat, or pressure is leaking from the gasket.
9. Connect the fuel cut solenoid valve connector.
10. Install the glow plugs.

Purchased from www.WorkshopManuals.co.uk

www.WorkshopManuals.co.uk

# OIL PAN

## REMOVAL AND INSTALLATION

**Pre-removal and Post-installation Operation**
- Skid Plate and Under Cover Removal and Installation
- Engine Oil Draining and Refilling
  (Refer to GROUP 12 - On-vehicle Service.)
- Differential Gear Oil Draining and Refilling
  (Refer to GROUP 26 - On-vehicle Service.)
- Front Differential and No.2 Crossmember Assembly Removal and Installation
  (Refer to GROUP 11A - Oil Pan.)

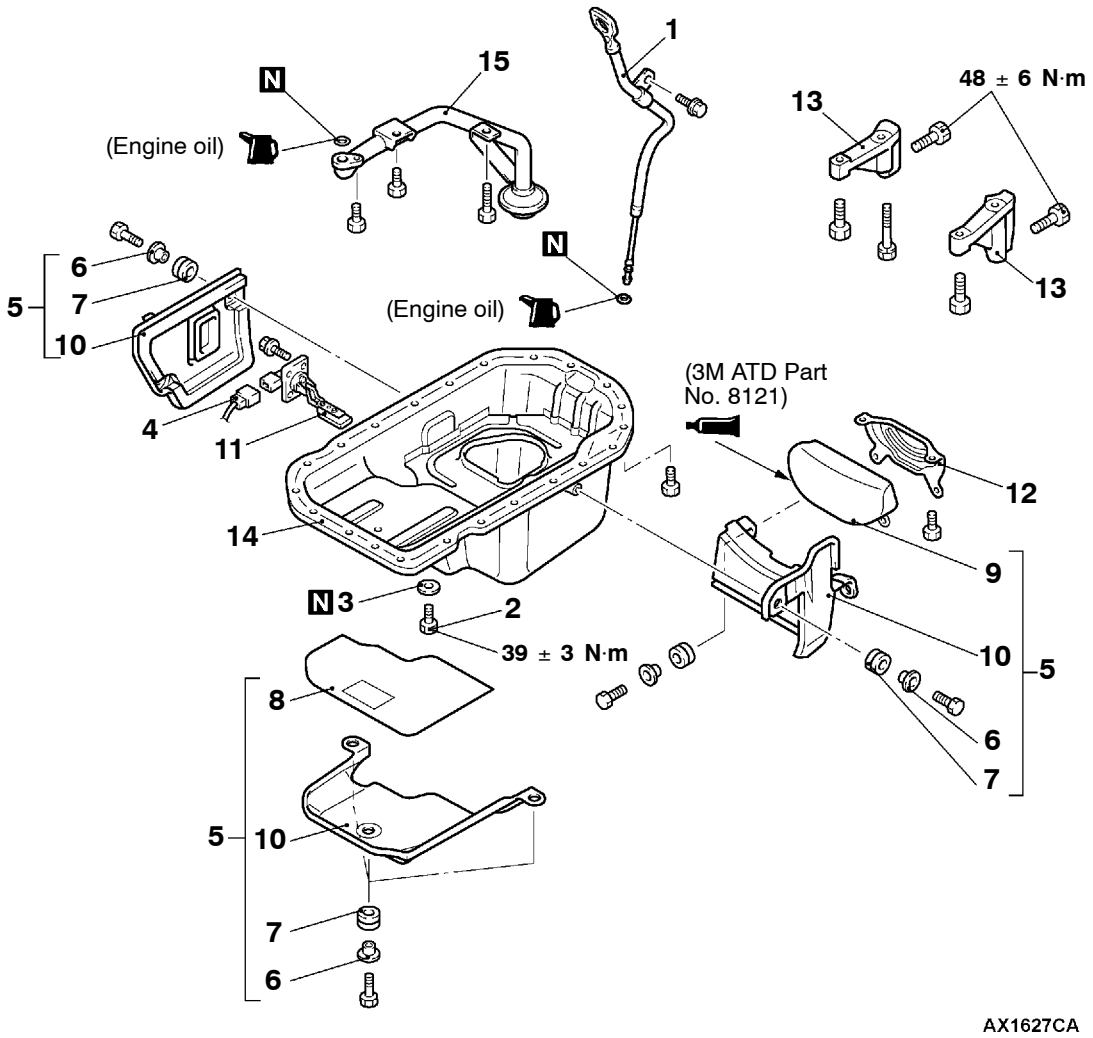


**Removal steps**

1. Engine oil level gauge and guide assembly
2. Drain plug
3. ▶B◀ Drain plug gasket
4. Engine oil level sensor connector
5. Oil pan cover assembly
6. Insulator collar
7. Insulator
8. Oil pan rubber
9. Rubber
10. Oil pan cover
11. Engine oil level sensor
12. Dust cover
13. Stiffener
14. ◀A▶ ▶A◀ Oil pan
15. Oil screen

Purchased from www.WorkshopManuals.co.uk

www.WorkshopManuals.co.uk

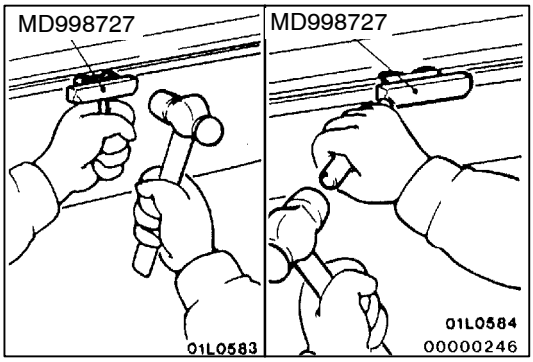


## REMOVAL SERVICE POINT

### ◀A▶ OIL PAN REMOVAL

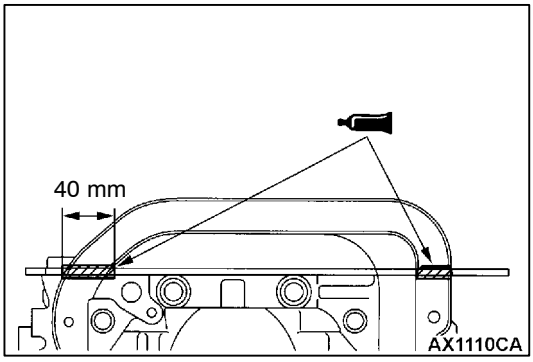


## INSTALLATION SERVICE POINTS

### ▶A◀ OIL PAN INSTALLATION

1. Clean the gasket mating surfaces of the oil pan, the timing gear case and the crankcase assembly with a scraper or a wire brush.
2. Apply the specified sealant to the mating surface of the timing gear case and crankcase.

   **Specified sealant: 3M ATD Part No.8660 or equivalent**

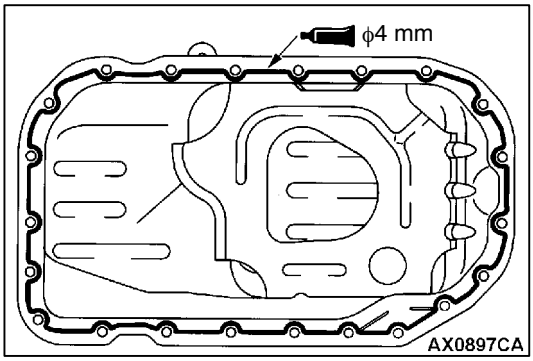


3. Apply a continuous bead of the specified sealant to the the oil pan mating surface as shown.

   **Specified sealant:**
   **MITSUBISHI GENUINE PART MD970389 or equivalent**

4. After applying the sealant, install the oil pan within 15 minutes.

   **Caution**
   **(1) When installing the oil pan, be careful not to disturb the sealant.**
   **(2) Whenever the oil pan mounting bolts are loosened or tightened again after the oil pan installation, always apply the sealant again.**
   **(3) After the oil pan is installed, wait for at least one hour, and then start the engine.**

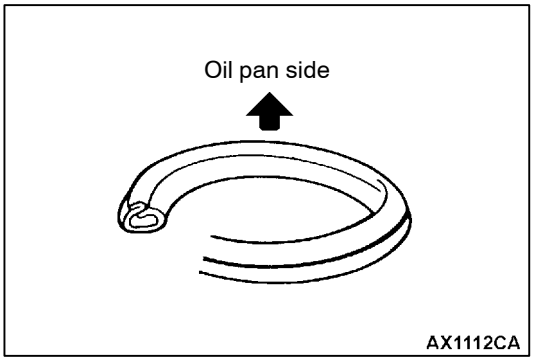


### ▶B◀ DRAIN PLUG GASKET INSTALLATION

Always replace the gasket with a new one so that it faces the direction shown.

## INSPECTION

- Check oil pan for cracks.
- Check oil pan sealant-coated surface for damage and deformation.
- Check oil screen for cracked, clogged or damaged wire net and pipe.

Purchased from www.WorkshopManuals.co.uk

www.WorkshopManuals.co.uk

# VACUUM PUMP

## REMOVAL AND INSTALLATION

**Pre-removal and Post-installation Operation**
- Engine Cover Removal and Installation (Refer to P.11C-23.)
- Battery and Battery Tray Removal and Installation
- Engine Oil Check and Refill (Refer to GROUP 12 - On-vehicle Service.) <Post-installation operation>

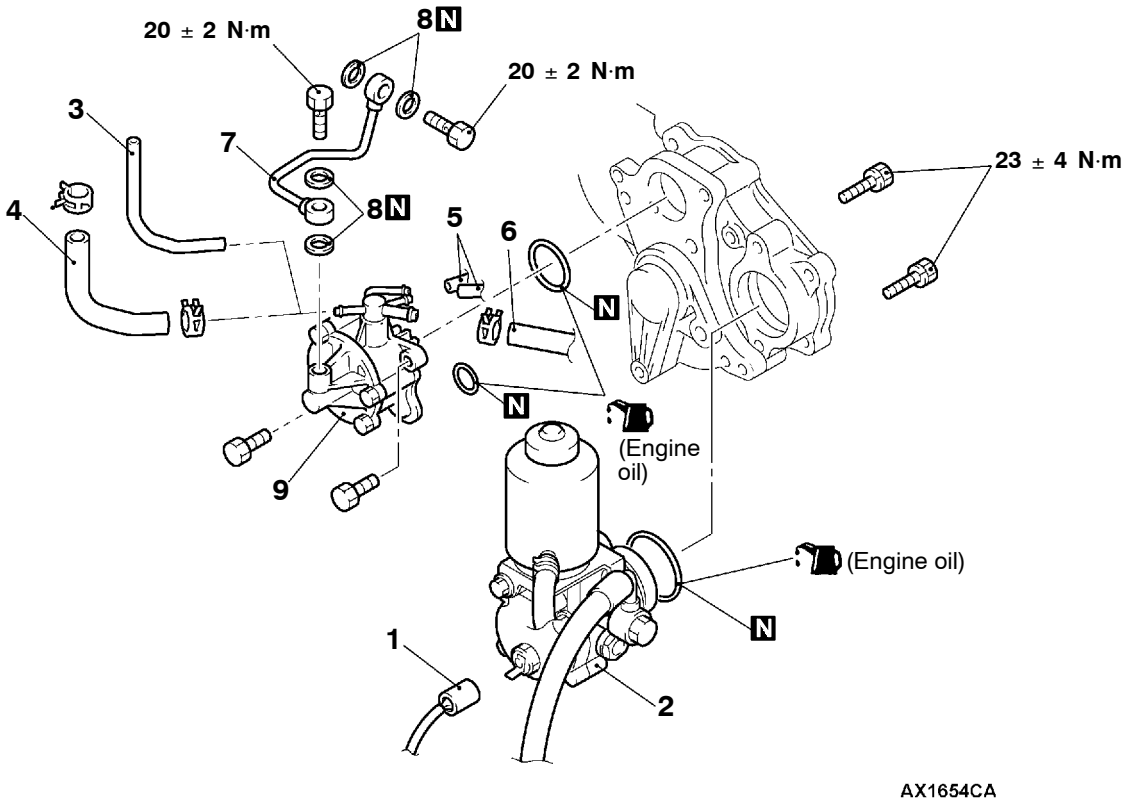


**Removal steps**

1. Power steering oil pressure switch connector
◀A▶ 2. Power steering oil pump assembly
3. Vacuum hose <Except R.H. drive vehicles without ABS>
4. Vacuum hose <R.H. drive vehicles without ABS>
5. Vacuum hose connection
6. Brake booster vacuum hose connection <L.H. drive vehicles without ABS>
7. Vacuum pump oil pipe
8. Vacuum pump oil pipe gasket
9. Vacuum pump assembly

## REMOVAL SERVICE POINT

### ◀A▶ POWER STEERING OIL PUMP ASSEMBLY REMOVAL

1. Remove the power steering oil pump assembly from the timing gear case with its hoses still attached.
2. Support the oil pump aside with a cord.

Purchased from www.WorkshopManuals.co.uk

www.WorkshopManuals.co.uk

# TIMING CHAIN

## REMOVAL AND INSTALLATION

**Pre-removal and Post-installation Operation**
- Engine Coolant Drain and Refill (Refer to GROUP 14 - On-vehicle Service.)
- Under Cover and Skid Plate Removal and Installation
- Engine Oil Draining and Refilling (Refer to GROUP 12 - On-vehicle Service.)
- Fuel Line Air-bleeding (Refer to GROUP 13C - On-vehicle Service.) <Post-installation operation>
- Drive Belt Tension Check and Adjustment (Refer to P.11C-5.)<Post-installation operation>
- Camshaft Removal and Installation (Refer to P.11C-23.)
- Cooling Fan and Fan Clutch Assembly Removal and Installation (Refer to GROUP 14.)
- Vacuum Pump Removal and Installation (Refer to P.11C-16.)
- Oil Pan Removal and Installation(Refer to P.11C-14.)

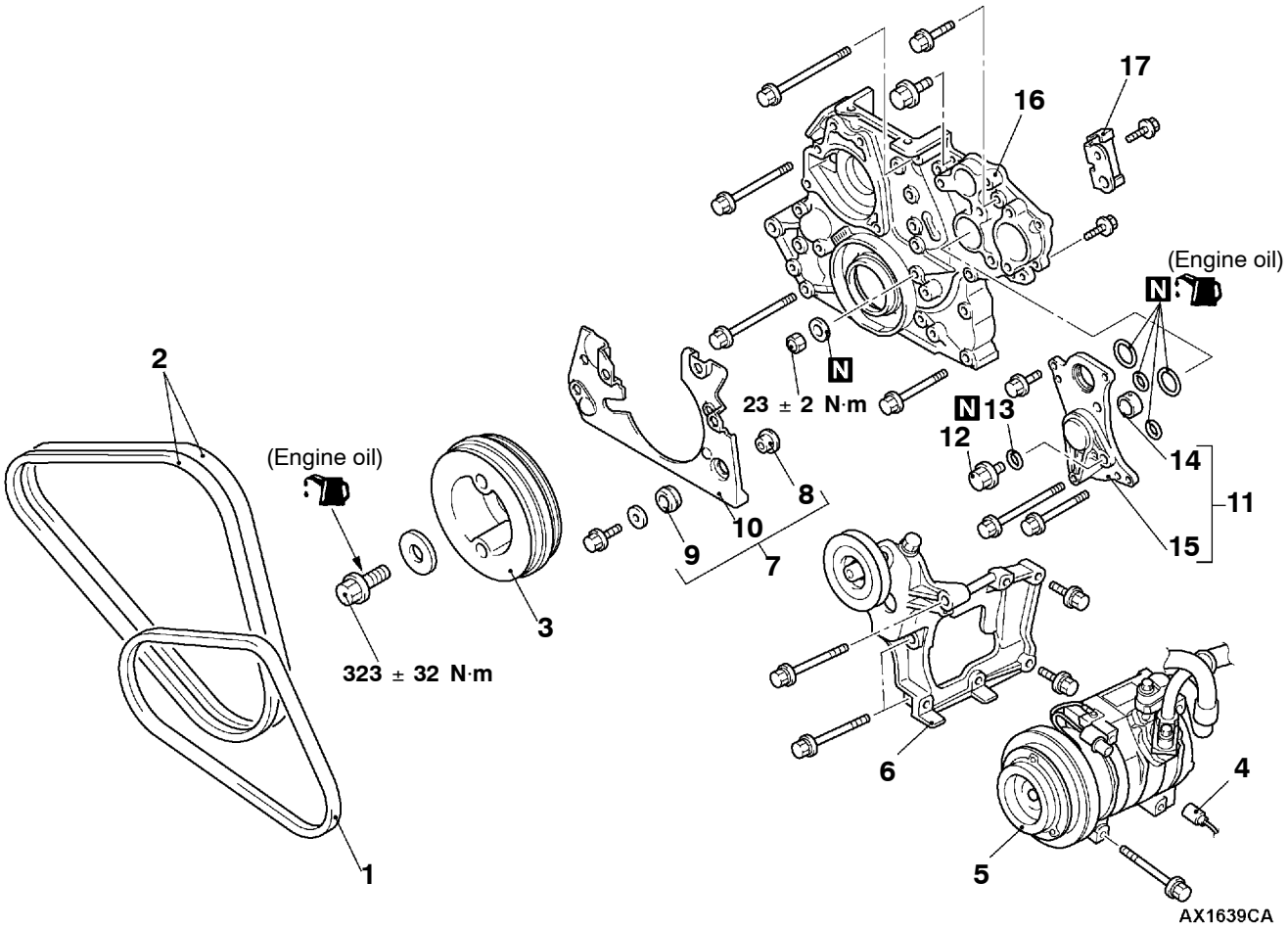


**Removal steps**

◀A▶ 1. A/C compressor drive belt <Vehicles with A/C>
◀B▶ 2. Alternator drive belt
◀C▶ 3. Crankshaft pulley
- Alternator(Refer to GROUP 16.)
- Water pump(Refer to GROUP 14.)
- Cylinder Head Assembly (Refer to P.11C-27.)

4. A/C compressor connector <Vehicles with A/C>
5. A/C compressor <Vehicles with A/C>
6. A/C compressor bracket and tension pulley assembly<Vehicles with A/C>
7. Timing gear case cover assembly
8. Insulator collar
9. Insulator
10. Timing gear case cover
▶B◀ 11. Bearing block assembly
12. Drain plug
13. Drain plug gasket
14. Bearing block bushing
15. Bearing block
▶B◀ 16. Timing gear case
17. Lower guide plate

Purchased from www.WorkshopManuals.co.uk

www.WorkshopManuals.co.uk

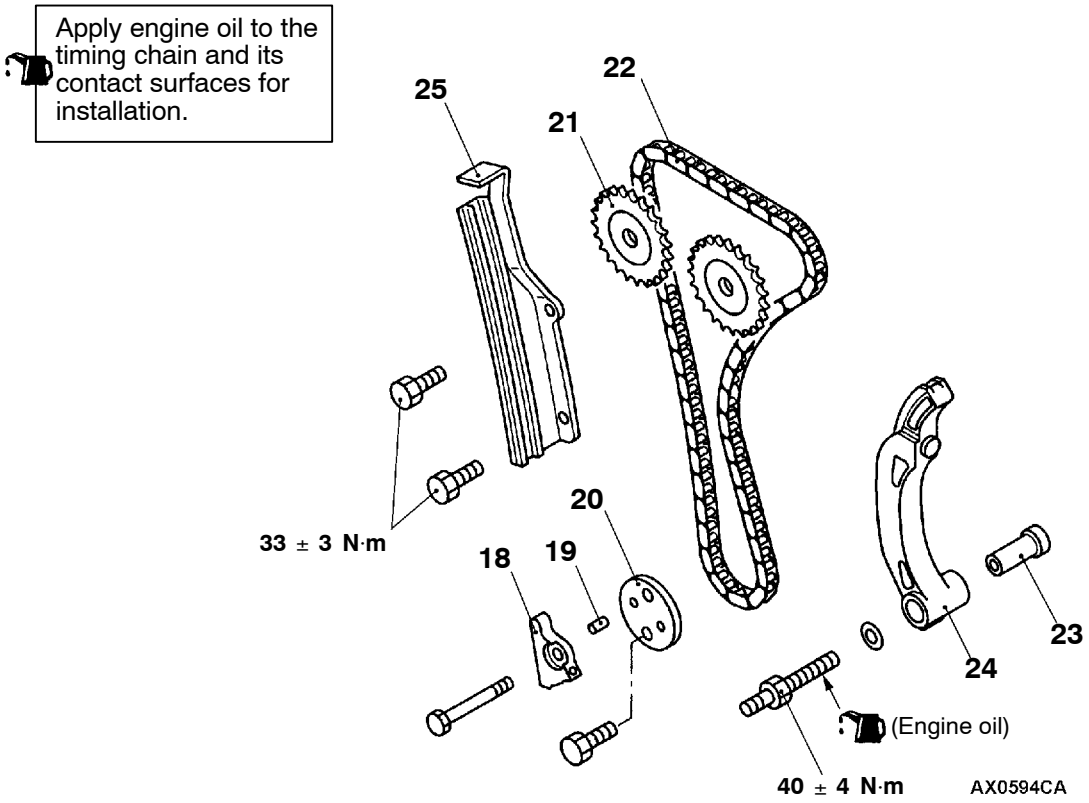


▶A◀ 18. Oil jet
▶A◀ 19. Spring pin
▶A◀ 20. Idler washer
▶A◀ 21. Camshaft sprocket
▶A◀ 22. Timing chain
23. Tension lever shaft
24. Tension lever
25. Guide plate

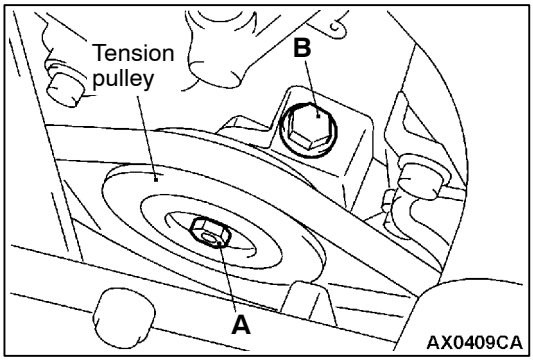


## REMOVAL SERVICE POINTS

### ◀A▶ A/C COMPRESSOR DRIVE BELT REMOVAL

1. Loosen the tension pulley securing bolt A.
2. Loose the adjusting bolt B to remove the belt.

**Caution**
**To reuse the drive belt, mark its running direction (clockwise direction) on the belt back side with a chalk.**

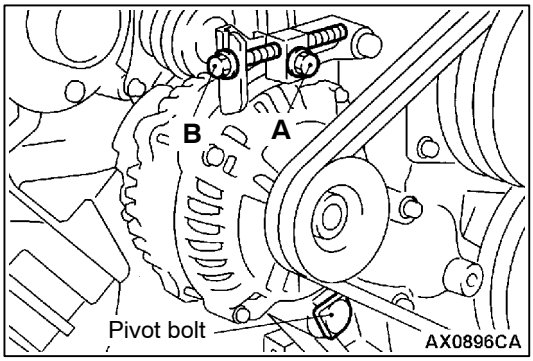


### ◀B▶ ALTERNATOR DRIVE BELT REMOVAL

1. Loosen the alternator pivot bolt, nut and the securing bolt A.
2. Loose the adjusting bolt B to remove the belts.

**Caution**
**(1) To reuse the drive belts,mark its running direction (clockwise direction) on the belt backside with a chalk.**
**(2) To replace the drive belts, always replace them as a set.**

Purchased from www.WorkshopManuals.co.uk

www.WorkshopManuals.co.uk

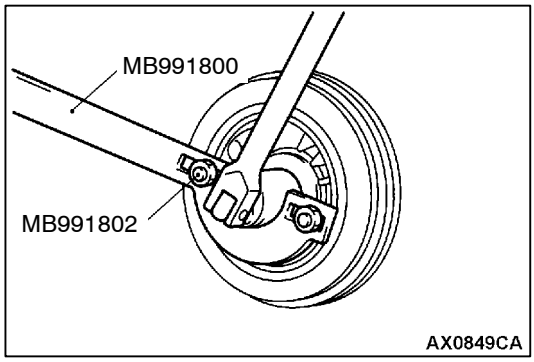


◀C▶ CRANKSHAFT PULLEY REMOVAL

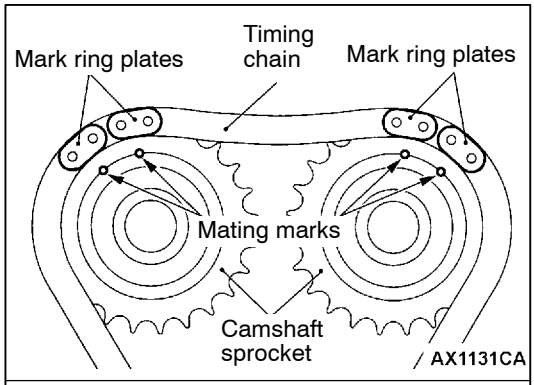


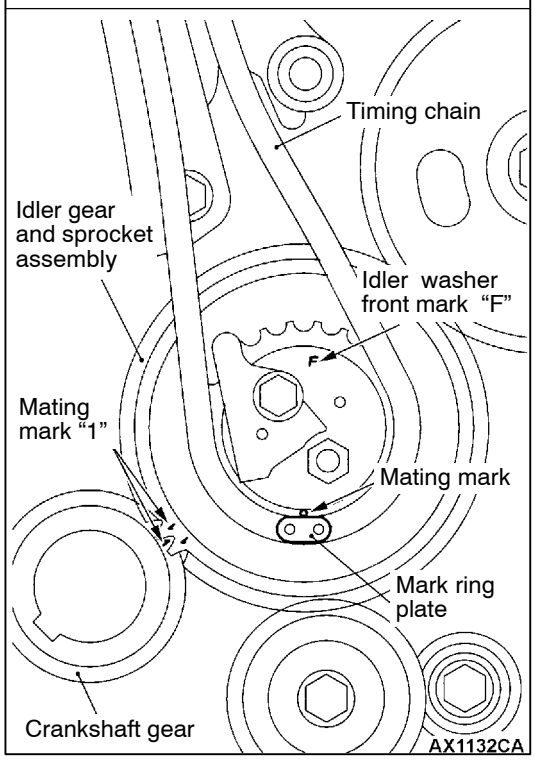


## INSTALLATION SERVICE POINTS

### ▶A◀ TIMING CHAIN/CAMSHAFT SPROCKET/IDLER WASHER/SPRING PIN/OIL JET INSTALLATION

1. Check that the mating mark on the idler gear and sprocket assembly is aligned with mating mark "1"on the crankshaft gear.
2. Align the mating mark on the idler gear and sprocket assembly with the dark blue mark ring plate on the timing chain.

   **Caution**
   **Note that the timing chain has one mark ring plate for the idler gear and sprocket assembly side, and two mark ring plates for each camshaft sprocket.**
3. Align the mark ring plates with the camshaft sprocket mating marks.
4. Tie up the timing chain and the camshaft sprocket with a cord to prevent the mating mark misalignment.
5. Install the idler washer, the spring pin and the oil jet. The idler washer front mark "F" must face toward the the front of the engine.

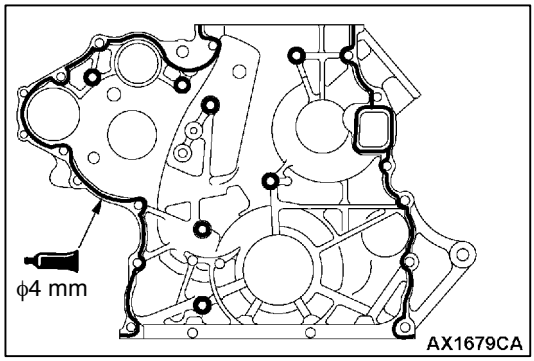


### ▶B◀ TIMING GEAR CASE/BEARING BLOCK ASSEMBLY INSTALLATION

1. Clean the timing gear case and the front plate mating surfaces with a scraper or a wire brush.
2. Apply a continuous bead of the specified sealant to the timing gear case mating surface as shown.

   **Specified sealant:**
   **MITSUBISHI GENUINE PART MD970389 or equivalent**

Purchased from www.WorkshopManuals.co.uk

www.WorkshopManuals.co.uk

3. After applying the sealant, install the gear case within 15 minutes.

   **Caution**
   **(1) When installing the timing gear case, be careful not to disturb the sealant.**
   **(2) Whenever the timing gear case mounting bolts are loosened or tightened again after the timing gear case installation, always apply the sealant again.**
   **(3) After the timing gear case is installed, wait for at least one hour, and then start the engine.**

4. Install the mounting nuts and bolts to the timing gear case and the bearing block assembly at the shown positions.

**Timing gear case**

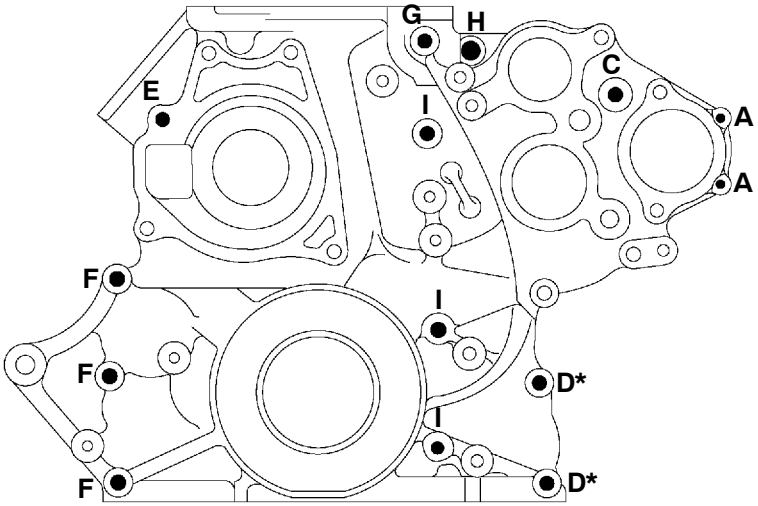


BX1666CA

**Bearing block assembly**

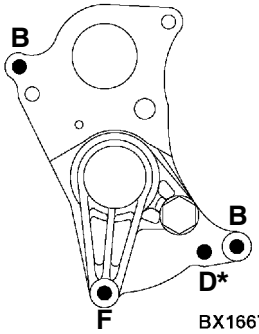


BX1667CA

| Name | Symbol | SIze mm (D × L) | Name | Symbol | SIze mm (D × L) |
|---|---|---|---|---|---|
| Flange bolt | A | 6 × 20 | Flange bolt | F | 8 × 85 |
| | B | 8 × 30 | | G | 8 × 90 |
| | C | 8 × 50 | | H | 10 × 35 |
| | D* | 8 × 60 | Cap nut | I | - |
| | E | 8 × 75 | | | |

D=Nominal diameter
L=Nominal length
*: Vehicles without A/C

Purchased from www.WorkshopManuals.co.uk

www.WorkshopManuals.co.uk

# CRANKSHAFT OIL SEAL

## REMOVAL AND INSTALLATION

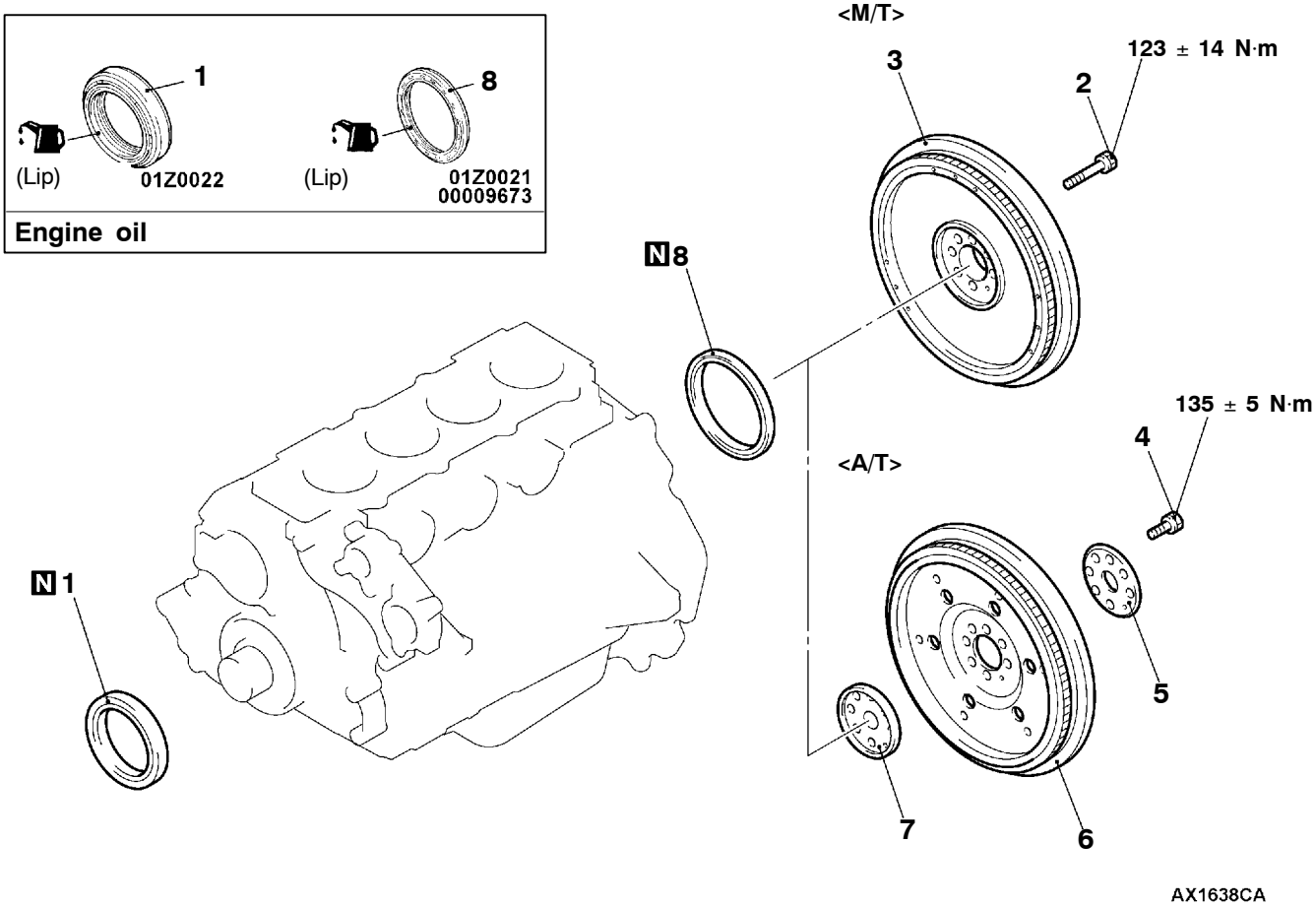


**Crankshaft front oil seal removal steps**

- Crankshaft pulley (Refer to P.11C-17.)

1. Crankshaft front oil seal

**Crankshaft rear oil seal removal steps**

**<M/T>**

- Transmission assembly (Refer to GROUP 22.)

◀A▶ 2. Flywheel bolt
3. Flywheel
8. Crankshaft rear oil seal

**<A/T>**

- Transmission assembly (Refer to GROUP 23.)

◀A▶ 4. Drive plate bolt
▶A◀ 5. Adapter plate
▶A◀ 6. Drive plate
▶A◀ 7. Crankshaft adapter
8. Crankshaft rear oil seal

Purchased from www.WorkshopManuals.co.uk

www.WorkshopManuals.co.uk

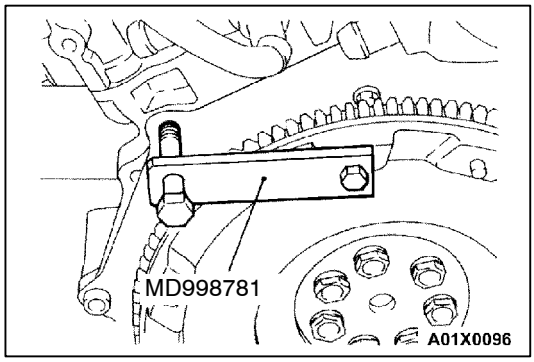


## REMOVAL SERVICE POINT

### ◀A▶ FLYWHEEL BOLT/DRIVE PLATE BOLT REMOVAL

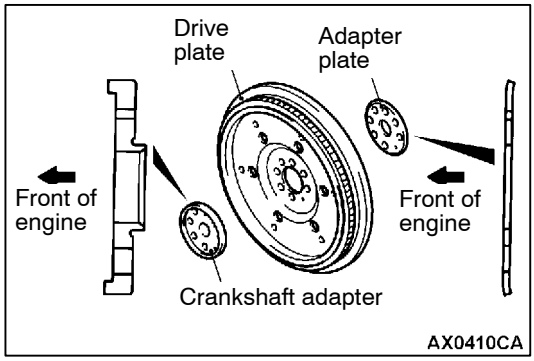


## INSTALLATION SERVICE POINT

### ▶A◀ CRANKSHAFT ADAPTER/DRIVE PLATE/ADAPTER PLATE INSTALLATION

Assemble the crankshaft adapter and the adapter plate to the drive plate as shown, and then install the drive plate assembly into the crankshaft.

Purchased from www.WorkshopManuals.co.uk

www.WorkshopManuals.co.uk

# CAMSHAFT

## REMOVAL AND INSTALLATION

**Post-installation Operation**
Fuel Line Air-bleeding
(Refer to GROUP 13C - On-vehicle Service.)

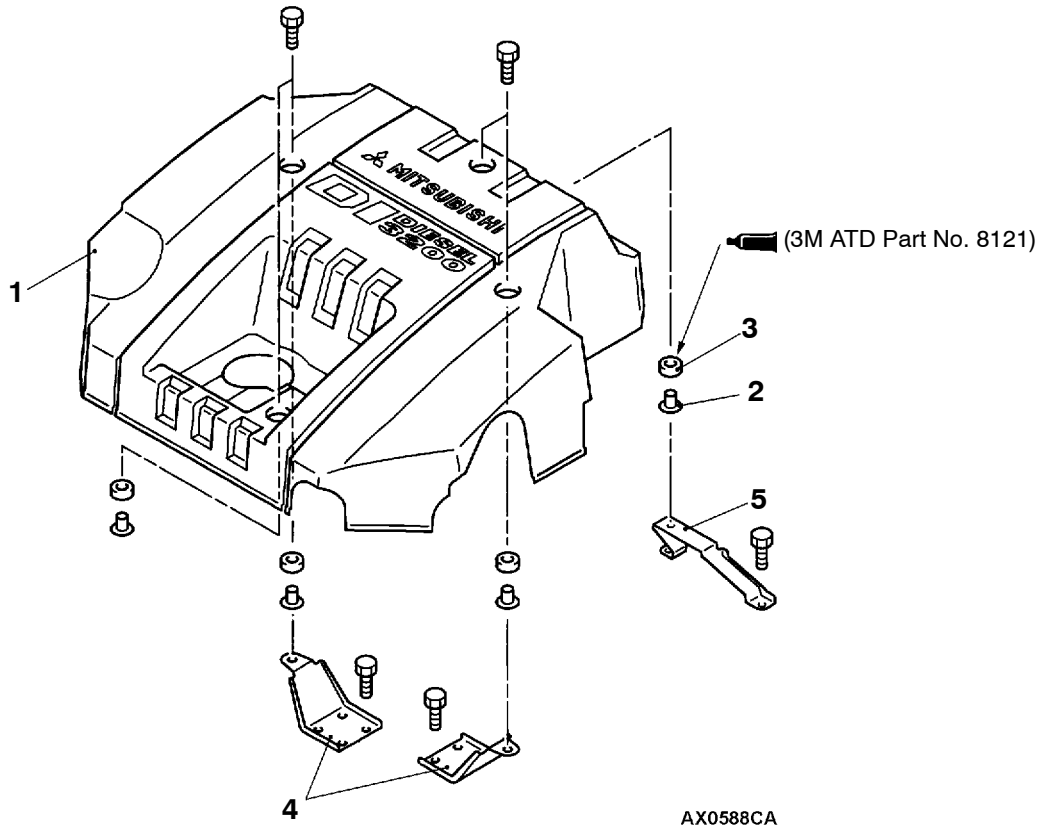


**Removal steps**

1. Engine cover assembly
2. Insulator collar
3. Insulator
4. Engine cover bracket
5. Engine cover bracket

- Air cleaner (Refer to GROUP 15.)
- EGR valve and EGR pipe assembly (Refer to GROUP 17 - EGR Valve.)

Purchased from www.WorkshopManuals.co.uk

www.WorkshopManuals.co.uk

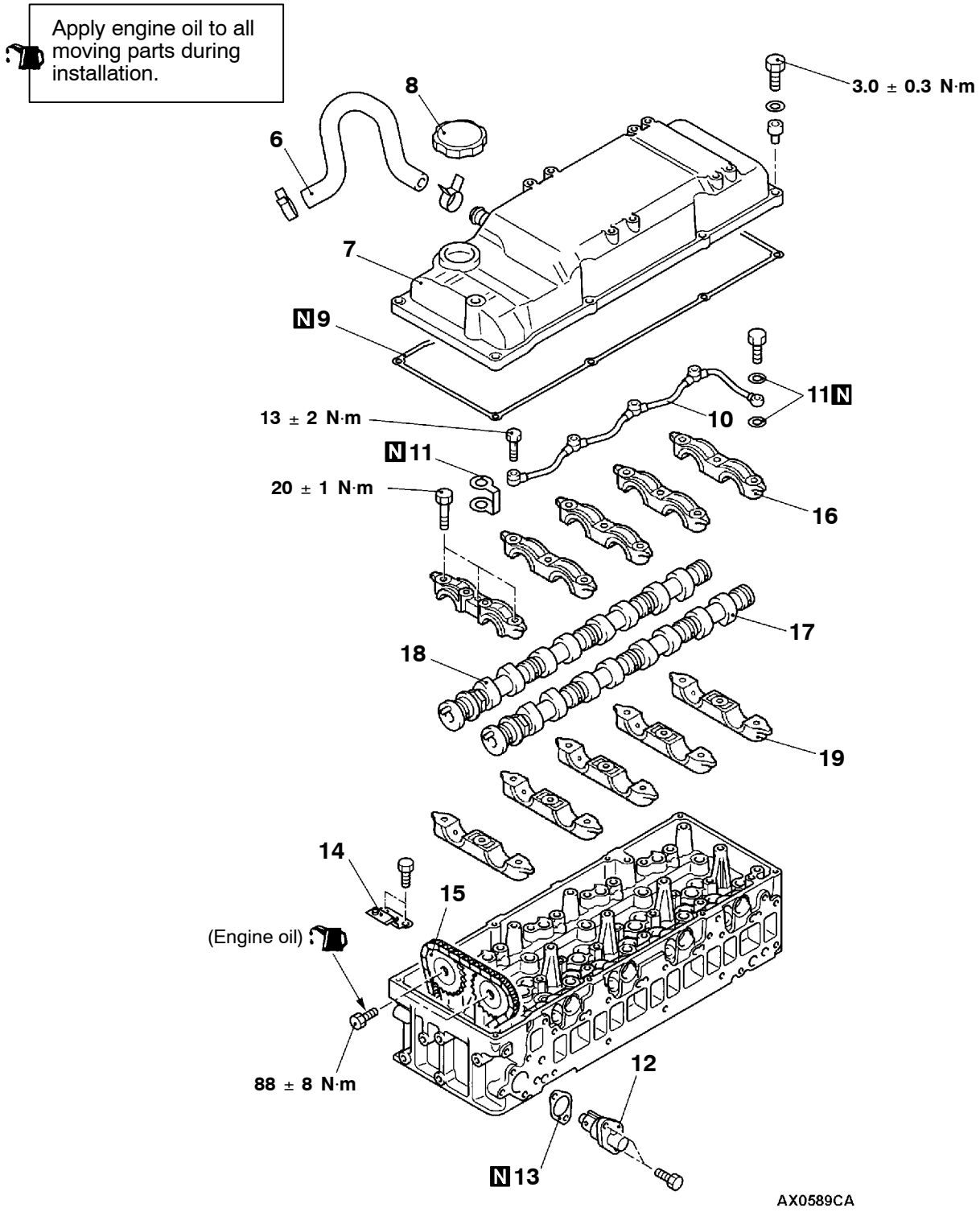


6. Breather hose
7. Rocker cover
8. Oil filler cap
9. Rocker cover gasket
10. Fuel leak-off pipe
11. Fuel leak-off pipe gasket
- Valve clearance adjustment (Refer to P.11C-8.)

▶D◀ 12. Chain tensioner
▶C◀ 13. Chain tensioner gasket
14. Upper guide plate
◀A▶ ▶B◀ 15. Camshaft sprocket
▶A◀ 16. Camshaft cap
17. Intake camshaft
18. Exhaust camshaft
▶A◀ 19. Camshaft holder

Purchased from www.WorkshopManuals.co.uk

www.WorkshopManuals.co.uk

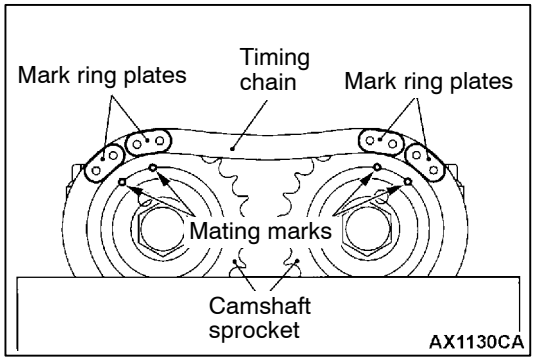


## REMOVAL SERVICE POINT

### ◀A▶ CAMSHAFT SPROCKET REMOVAL

1. Turn the crankshaft clockwise, align the mating marks on the camshaft sprocket with the dark blue mark ring plates on the timing chain to set No.1 cylinder to TDC of its compression stroke.

   **Caution**
   **Never turn the crankshaft anticlockwise.**

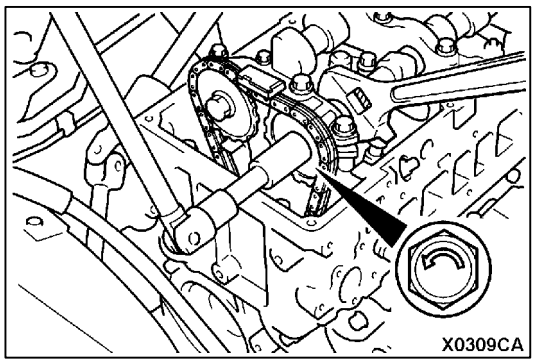


2. Hold the hexagonal part of the camshaft with an open end wrench, loosen the camshaft sprocket bolts, and then remove the camshaft sprockets with the timing chain still attached.

   **Caution**
   **(1) Use the timing chain to prevent the camshaft from turning.**
   **(2) The camshaft sprocket bolt is left threaded, so the arrow indicating its tightening direction is marked on the bolt head. To loosen this bolt, turn the bolt to the opposite direction of the arrow.**
   **(3) The timing chain must be attached to the camshaft sprockets.**

3. Tie up the timing chain and the camshaft sprocket with a cord to prevent the mating mark misalignment.

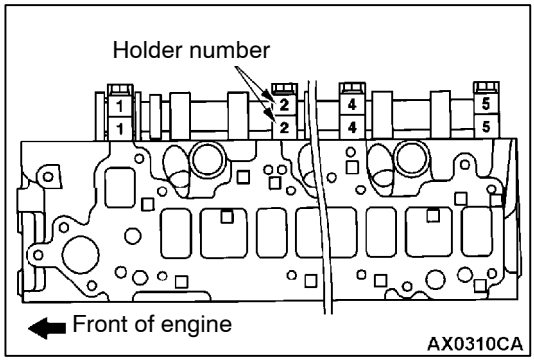


## INSTALLATION SERVICE POINTS

### ▶A◀ CAMSHAFT HOLDER/CAMSHAFT CAP INSTALLATION

The holder numbers are stamped on the camshaft holders and the camshaft caps, so install them in that order and tighten to the specified torque.

**Tightening torque: 20 ± 1 N·m**

Purchased from www.WorkshopManuals.co.uk

www.WorkshopManuals.co.uk

### ▶B◀ CAMSHAFT SPROCKET INSTALLATION

1. Install the camshaft sprockets to the camshafts with the timing chain still attached.
2. Hold the hexagonal part of the camshaft with an open end wrench in the same manner as removal.
3. Apply a small amount of engine oil to the camshaft sprocket bolt thread and the flange, and then tighten to the specified torque.

   **Tightening torque: 88 ± 8 N·m**

   **Caution**
   **(1) Use the timing chain to prevent the camshaft from turning.**
   **(2) The camshaft sprocket bolt is left threaded, so the arrow indicating its tightening direction is marked on the bolt head.**

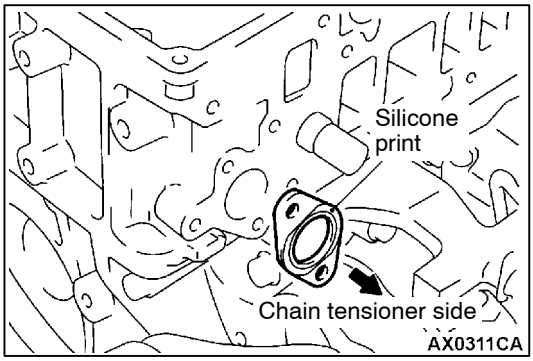


### ▶C◀ CHAIN TENSIONER GASKET INSTALLATION

Place the chain tensioner gasket with its silicone print facing toward the chain tensioner side.

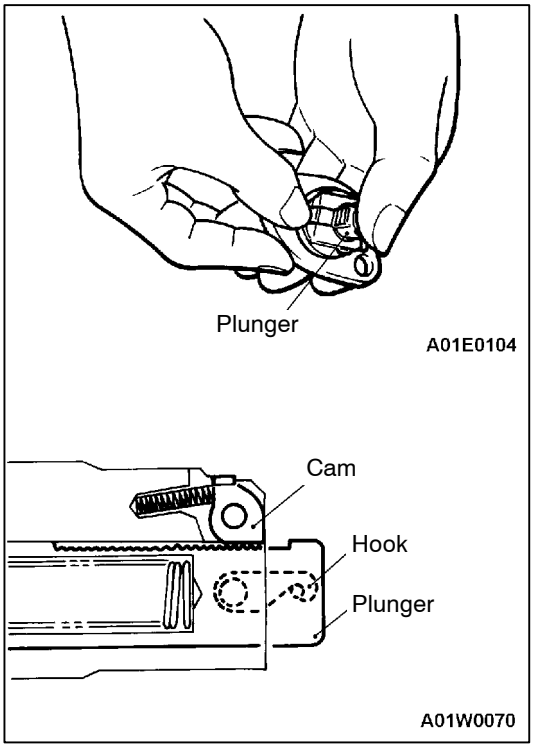


### ▶D◀ CHAIN TENSIONER INSTALLATION

1. Bend up the tab as shown to push in the plunger, and lock it with the hook.
2. Install the chain tensioner to the cylinder head.

   **Caution**
   **To install the chain tensioner, always push in the plunger. If you fail to do this, the timing chain will be excessively tensioned, causing damage.**

3. Turn the crankshaft clockwise.

   **Caution**
   **If the crankshaft is turned anticlockwise after the chain tensioner is installed, the plunger will be excessively tensioned, causing the plunger to go beyond the cam inside the chain tensioner.**

   NOTE
   If the crankshaft is turned clockwise after the chain tensioner is installed, the plunger is automatically unhooked. Then its internal ratchet mechanism adjusts the timing chain tension.

Purchased from www.WorkshopManuals.co.uk

www.WorkshopManuals.co.uk

# CYLINDER HEAD GASKET

## REMOVAL AND INSTALLATION

**Pre-removal and Post-installation Operation**

- Engine Coolant Drain and Refill (Refer to GROUP 14 - On-vehicle Service.)
- Engine Oil Check and Refill (Refer to GROUP 12 - On-vehicle Service.) <Post-installation operation>
- Fuel Line Air-bleeding (Refer to GROUP 13C - On-vehicle Service.) <Post-installation operation>
- Drive Belt Tension Check and Adjustment (Refer to P.11C-5.)<Post-installation operation>
- Camshaft Removal and Installation (Refer to P.11C-20.)
- Cooling Fan and Fan Clutch Assembly Removal and Installation (Refer to GROUP 14.)
- Intake Manifold Removal and Installation (Refer to GROUP15.)
- Turbocharger Removal and Installation (Refer to GROUP15.)
- Exhaust Manifold Removal and Installation (Refer to GROUP15.)

Purchased from www.WorkshopManuals.co.uk

www.WorkshopManuals.co.uk

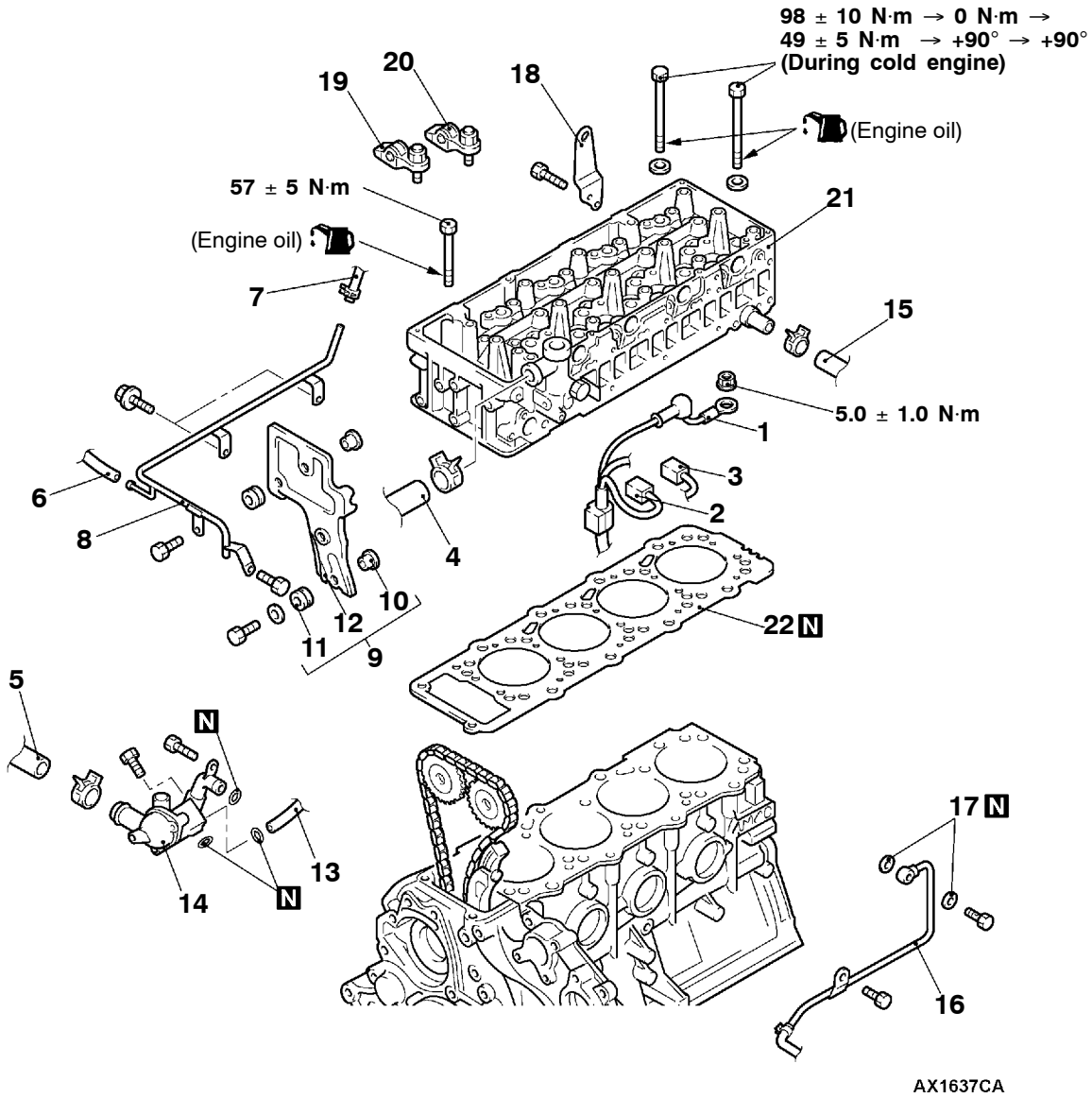


**Removal steps**

1. Glow plug connector
2. Engine coolant temperature gauge unit connector
3. Engine coolant temperature sensor connector
   - Drive belt (Refer to P.11C-17.)
◀A▶ ▶D◀ 4. Radiator upper hose connection
◀A▶ ▶D◀ 5. Radiator lower hose connection
6. Free-wheeling hub solenoid valve vacuum hose connection
7. Brake booster vacuum hose connection <R.H. drive vehicles without ABS>
8. Vacuum pipe
9. Timing gear case cover assembly
10. Insulator collar
11. Insulator
12. Timing gear case cover
    - Alternator brace (Refer to GROUP 16.)
▶C◀ 13. Heater return pipe connection
▶C◀ 14. Bypass pipe, thermostat case and cover assembly
15. Heater hose connection
16. Fuel return pipe connection
17. Fuel return pipe gasket
18. Engine hanger
19. Short rocker, adjusting screw and lock nut assembly
20. Long rocker, adjusting screw and lock nut assembly
◀B▶ ▶B◀ 21. Cylinder head assembly
▶A◀ 22. Cylinder head gasket

Purchased from www.WorkshopManuals.co.uk

www.WorkshopManuals.co.uk

## REMOVAL SERVICE POINTS

### ◀A▶ RADIATOR UPPER HOSE /RADIATOR LOWER HOSE DISCONNECTION

Align the mating marks on the radiator hose and the hose clamp, and then disconnect the hose.

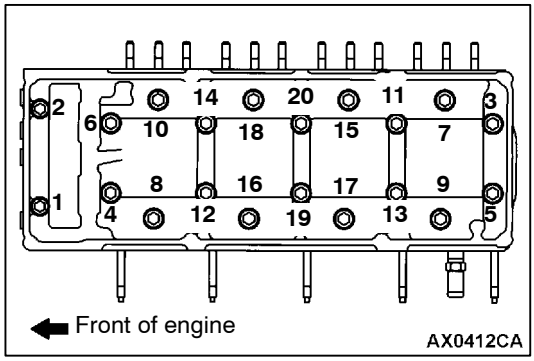


### ◀B▶ CYLINDER HEAD ASSEMBLY REMOVAL

1. Loosen the cylinder head bolts in the shown sequence progressively, and then remove the cylinder head bolts.
2. Lift the cylinder head assembly straight without removing the timing chain from the camshaft sprocket.

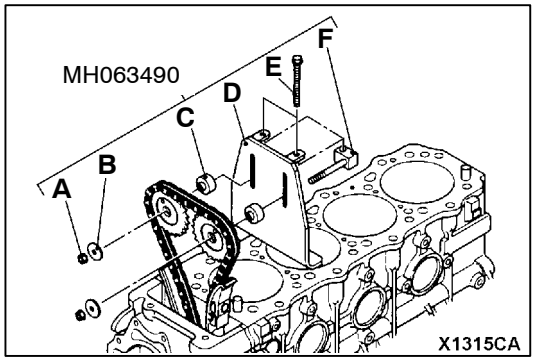


3. After the cylinder head assembly has been removed, use the special tool to hold the camshaft sprocket to prevent the timing chain from sliding off.

   Special tool MH063490: Camshaft sprocket holder kit components
   - A: Two nuts
   - B: Two washers
   - C: Two spacers
   - D: One adjust plate
   - E: Two bolts
   - F: Two nuts

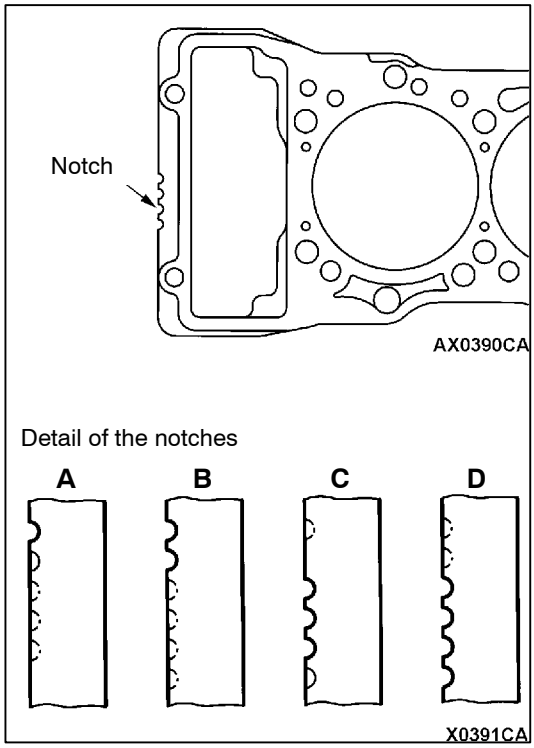


## INSTALLATION SERVICE POINTS

### ▶A◀ CYLINDER HEAD GASKET INSTALLATION

To replace the cylinder head gasket only, select a gasket of correct specification according to the table below.

| Notch specification | Part number |
|---|---|
| A(Thickness after tightening the bolts 0.70 mm) | ME204037 |
| B(Thickness after tightening the bolts 0.75 mm) | ME204038 |
| C(Thickness after tightening the bolts 0.80 mm) | ME204039 |
| D(Thickness after tightening the bolts 0.85 mm) | ME204040 |

**Caution**

**The thickness of the original cylinder head gasket is selected according to the protrusion amount of the piston. Therefore, if the piston or the connecting rod is replaced, the protrusion amount may be changed. Always select a correct gasket by measuring the protrusion amount. (For details, refer to the Engine Workshop Manual.)**

Purchased from www.WorkshopManuals.co.uk

www.WorkshopManuals.co.uk

### ▶B◀ CYLINDER HEAD ASSEMBLY INSTALLATION

1. Select a cylinder head gasket of correct specification.
2. Clean the cylinder head assembly, the timing gear case, and the crankcase assembly mating surfaces with a scraper or a wire brush.

   **Caution**
   **Do not allow foreign material to enter the engine coolant or oil passages and the cylinder.**

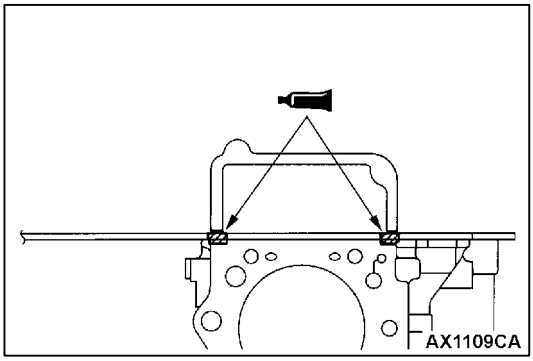


3. Apply the specified sealant to the upper side of the mating surface between the timing gear case and the crankcase assembly.

   **Specified sealant: 3M ATD Part No.8660 or equivalent**

4. Immediately after applying the sealant, use the cylinder head gasket to install the cylinder head assembly to the crankcase.

   **Caution**
   **(1) When installing the cylinder head, be careful not to disturb the sealant.**
   **(2) Whenever the cylinder head bolts are loosened after the cylinder head is installed, always apply the sealant again.**
   **(3) After the cylinder head is installed, wait for at least one hour, and then start the engine.**

5. The cylinder head bolt can be reused three times. Before installing the bolt, mark the bolt head by a punch to indicate how many times the bolt is used.

   **Caution**
   **If three marks have been already stamped, the bolt can't be reused and must be replaced with a new one.**

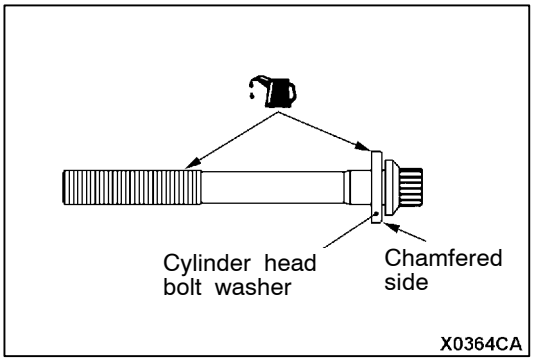


6. Install the cylinder head bolt washer to the cylinder head bolt so that the washer chamfered side faces as shown.
7. Apply a small amount of engine oil to the cylinder head bolt thread and the washer.

Purchased from www.WorkshopManuals.co.uk

www.WorkshopManuals.co.uk

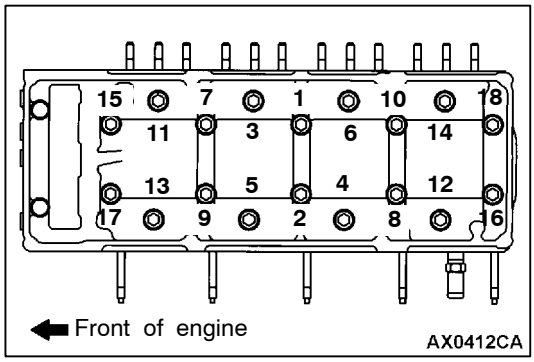


8. Tighten the cylinder head bolts according to the following procedure (angle-tightening procedure).
   (1) Tighten the cylinder head bolts in the shown sequence to 98 ± 10 N·m.

   **Bolt size: Nominal diameter×length mm**
   **Except 3, 6, 11, 14: 12×118**
   **3, 6, 11, 14: 12×133**

   (2) Loosen the cylinder head bolts completely in the reverse of the shown sequence.
   (3) Tighten the cylinder head bolts in the shown order to 49 ± 5N·m.

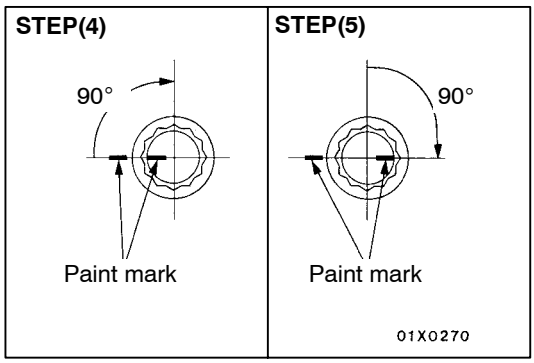


   (4) Mark the cylinder head bolts and the cylinder head with paint, and then tighten the bolts in the shown sequence to 90°.
   (5) Tighten the bolts in the shown sequence to additional 90°, and check that the paint marks on the cylinder head bolts are flush with the paint marks on the cylinder head.

   **Caution**
   **1) If the tightening angle is less than 90°, the bolt is loose.**
   **2) If the tightening angle is more than 90°, loosen the bolt and repeat the procedure from step 2.**

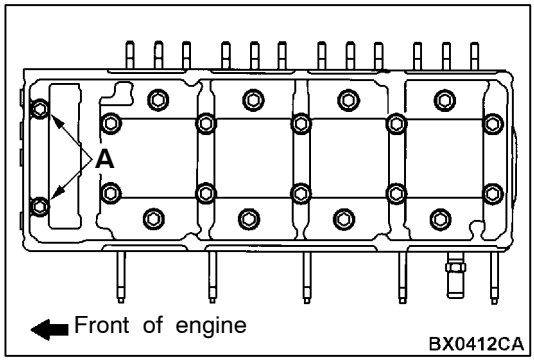


   (6) Apply a small amount of engine oil to the thread and the flange of bolts A , and tighten them to A to 57 ± 5 N·m.

**▶C◀ BYPASS PIPE, THERMOSTAT CASE AND COVER ASSEMBLY/HEATER RETURN PIPE INSTALLATION**

Install the O-rings into the pipes and the thermostat case grooves, apply water to the outer circumference of the O-ring and the inside surface of the pipe, and then press in the O-rings.

**Caution**
**Never get engine oil or grease on the O-rings.**

Purchased from www.WorkshopManuals.co.uk

www.WorkshopManuals.co.uk

**▶D◀ RADIATOR LOWER HOSE/RADIATOR UPPER HOSE CONNECTION**

1. Insert the hose up to the convex part of the thermostat cover and water outlet pipe.
2. Align the mating marks on the radiator hose and the hose clamp, and then install the hose.

Purchased from www.WorkshopManuals.co.uk

www.WorkshopManuals.co.uk

# ENGINE ASSEMBLY

## REMOVAL AND INSTALLATION

**Pre-removal and Post-installation Operation**
- Engine Coolant Drain and Refill (Refer to GROUP 14 - On-vehicle Service.)
- Under Cover and Skid Plate Removal and Installation
- Engine Oil Draining and Refilling (Refer to GROUP 12 - On-vehicle Service.)
- Fuel Line Air-bleeding (Refer to GROUP 13C - On-vehicle Service.) <Post-installation operation>
- A/C Compressor Drive Belt Tension Check and Adjustment<Vehicles with A/C> (Refer to P.11C-7.)<Post-installation operation>
- Hood Removal and Installation(Refer to GROUP 42.)
- Engine Cover Removal and Installation (Refer to P.11C-23.)
- Fuel Filter Removal and Installation (Refer to GROUP 13D.)
- Air Cleaner Removal and Installation (Refer to GROUP 15.)
- Cooling Fan and Fan Clutch Assembly Removal and Installation (Refer to GROUP 14.)
- Radiator Removal and Installation (Refer to GROUP 14.)

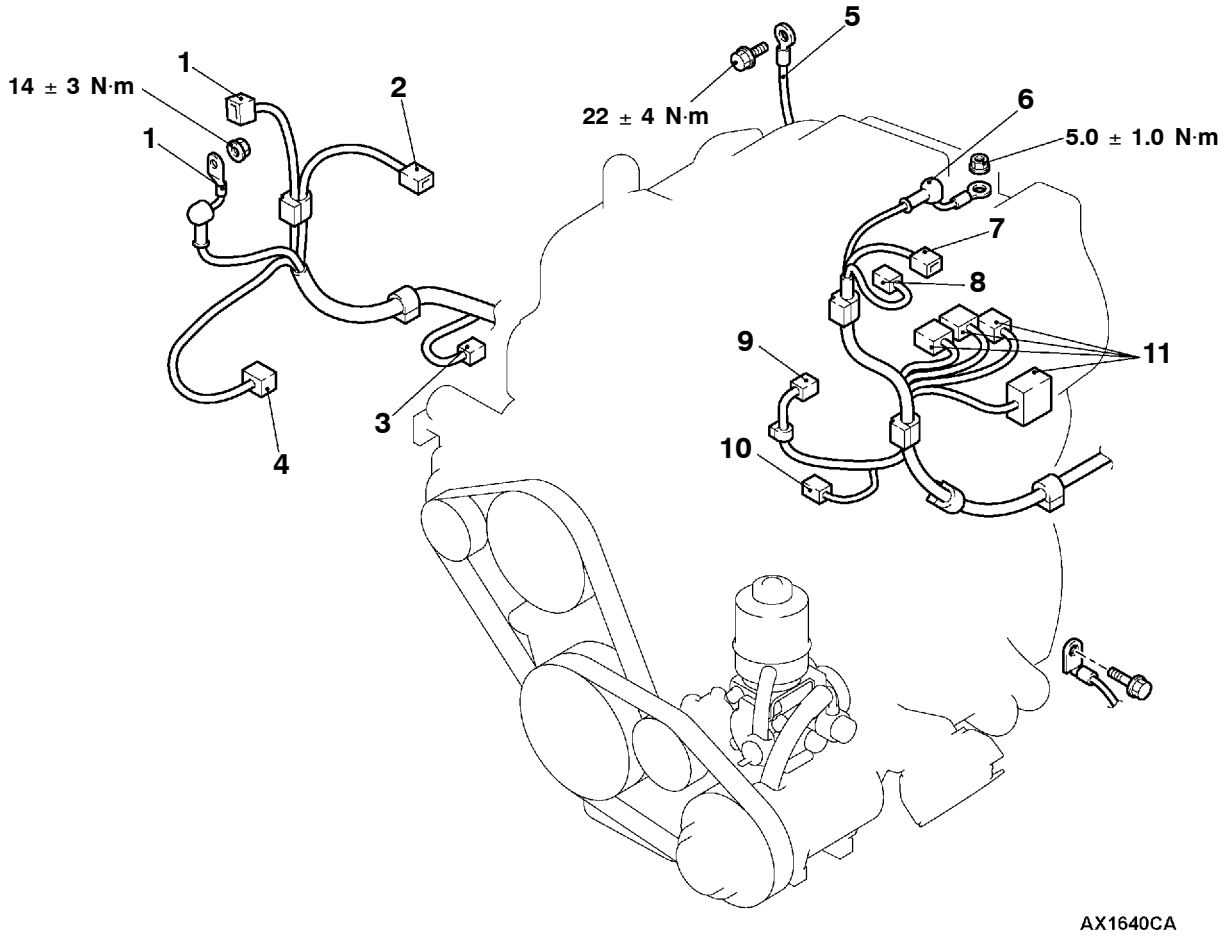


**Removal steps**
- Intercooler air pipe (Refer to GROUP 15 - Intercooler.)

1. Alternator connector
2. Oil pressure switch connector
3. Engine oil level sensor connector
4. Free-wheeling hub engage switch connector
5. Earth cable connection

- EGR valve and EGR pipe assembly (Refer to GROUP 17 - EGR Valve.)

6. Glow plug connector
7. Boost air temperature sensor connector
8. Engine coolant temperature gauge unit connector
9. Power steering oil pressure switch connector
10. A/C compressor connector <Vehicles with A/C>
11. Injection pump connector

Purchased from www.WorkshopManuals.co.uk

www.WorkshopManuals.co.uk

**Caution**
***: indicates parts which should be temporarily tightened, and then fully tightened with the engine weight applied on the vehicle body.**

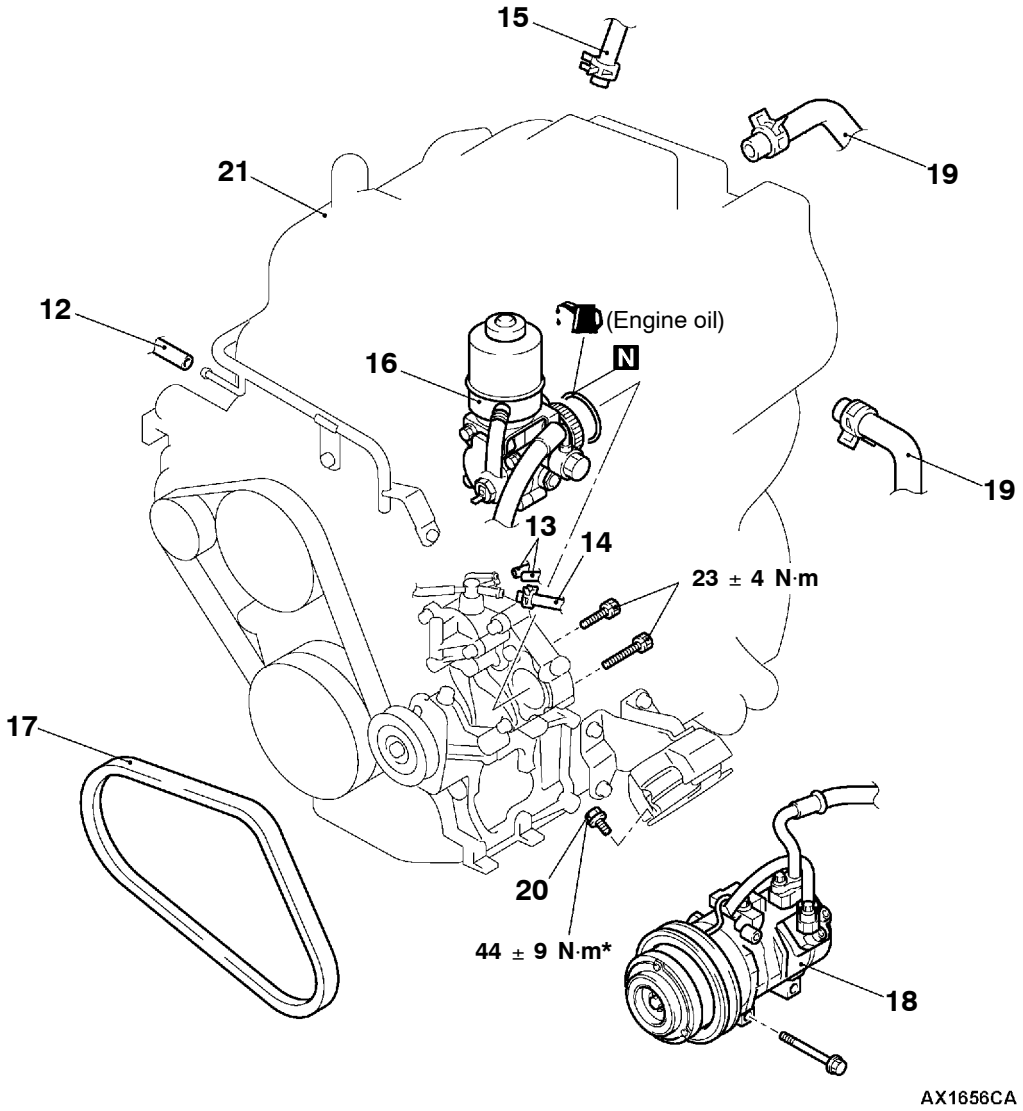


12. Free-wheeling hub solenoid valve vacuum hose connection
13. Vacuum hose connection
14. Brake booster vacuum hose connection
    <L.H. drive vehicles without ABS>
15. Brake booster vacuum hose connection
    <R.H. drive vehicles without ABS>

◀A▶ 16. Power steering oil pump assembly
◀B▶ 17. A/C compressor drive belt
    <Vehicles with A/C>

◀C▶ 18. A/C compressor
    <Vehicles with A/C>
19. Heater hose connection
    - Glow plug relay and solenoid valve assembly
    - Transmission assembly
      (M/T: Refer to GROUP 22.)
      (A/T: Refer to GROUP 23.)
20. Engine mount insulator mounting bolt

◀D▶ ▶A◀ 21. Engine assembly

Purchased from www.WorkshopManuals.co.uk

www.WorkshopManuals.co.uk

## REMOVAL SERVICE POINTS

### ◀A▶ POWER STEERING OIL PUMP ASSEMBLY REMOVAL

1. Remove the power steering oil pump assembly from the timing gear case with its hoses still attached.
2. Suspend the power steering oil pump with a cord out of the way.

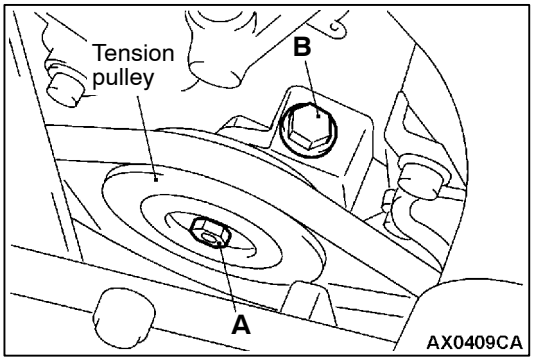


### ◀B▶ A/C COMPRESSOR DRIVE BELT REMOVAL

1. Loosen the tension pulley securing bolt A.
2. Loose the adjusting bolt B to remove the belt.

**Caution**
**To reuse the drive belt, mark its running direction (clockwise direction) on the belt back side with a chalk.**

### ◀C▶ A/C COMPRESSOR REMOVAL

1. Remove the A/C compressor from the bracket with its refrigerant hoses still attached.
2. Suspend the A/C compressor with a cord out of the way.

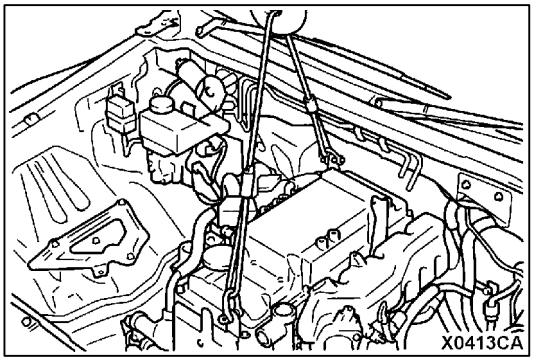


### ◀D▶ ENGINE ASSEMBLY REMOVAL

1. Make sure that all the cables, hoses and harness connectors are disconnected.
2. Use a chain block to support and lift the engine assembly carefully.

## INSTALLATION SERVICE POINT

### ▶A◀ ENGINE ASSEMBLY INSTALLATION

Lower the engine assembly into the engine compartment, being careful not to pinch the cables, hoses or harness connectors.

Purchased from www.WorkshopManuals.co.uk

www.WorkshopManuals.co.uk

**NOTES**

Purchased from www.WorkshopManuals.co.uk

www.WorkshopManuals.co.uk

# Service Bulletins

**Click on the applicable bookmark to select the Service Bulletin.**

Purchased from www.WorkshopManuals.co.uk

www.WorkshopManuals.co.uk

# SERVICE BULLETIN

MITSUBISHI MOTORS

TECHNICAL SERVICE PLANNING
INTERNATIONAL CAR ADMINISTRATION OFFICE. MITSUBISHI MOTORS CORPORATION

| | | |
|---|---|---|
| SERVICE BULLETIN | NO. : MSB-00E11-002 | |
| | DATE : 2000-10-20 | <MODEL> (EC)PAJERO/ MONTERO(V10 to V40, V60, V70) <M/Y> 95-10 |
| SUBJECT : TIMING CHAIN REPLACEMENT PROCEDURE FOR 4M40, 41 ENGINES | | |
| GROUP : ENGINE | DRAFTNO. : 00SY070311 | |
| INFORMATION | INTERNATIONAL CAR ADMINISTRATION OFFICE | T. Masaki<br>T. MASAKI - MANAGER<br>TECHNICAL SERVICE PLANNING |

## 1. Description:

This Service Bulletin informs you of the timing chain replacement procedures for 4M40 and 4M41 engines, the relevant special tools and the timing chain replacement kits available.

MH063566: Timing chain tool set

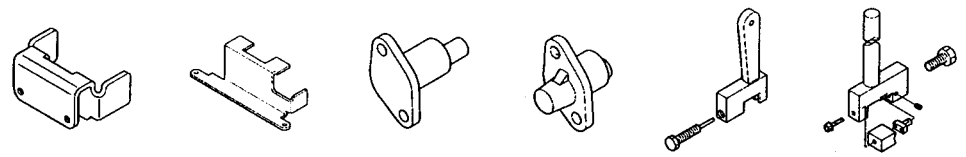

| ME190551: Timing chain kit (for 4M40 single chain)<br>ME190552: Timing chain kit (for 4M41) | ME190549: Timing chain kit (for 4M40 double chain) |
|---|---|
| 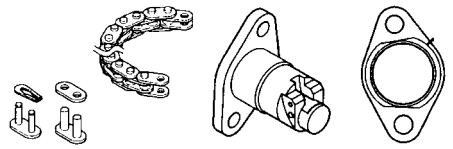 | 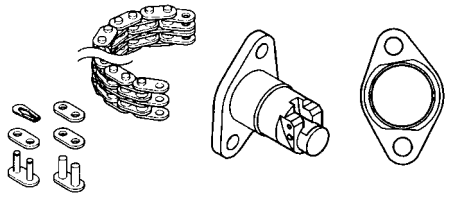 |

## 2. Applicable Manuals:

| Manual | Pub. No. |
|---|---|
| PAJERO Workshop Manual Chassis | PWJE9086-F (English) |
| MONTERO Workshop Manual Chassis | PWJS9087-F (Spanish) |
| PAJERO Workshop Manual Chassis | PWJF9088-F (French) |
| | PWJG9089-F (German) |
| | PWJD9090-F (Dutch) |
| | PWJW9091-F (Swedish) |
| 2001 PAJERO Workshop Manual Chassis Volume 1 | PWJE0001 (1/2) (English) |
| 2001 MONTERO Workshop Manual Chassis Volume 1 | PWJS0002 (1/2) (Spanish) |



Purchased from www.WorkshopManuals.co.uk

www.WorkshopManuals.co.uk



| Tool | Number | Name | Use |
|---|---|---|---|
| 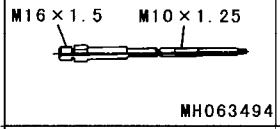  | MH063494 | Compression gauge adapter | Compression pressure check |
| 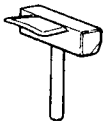 | MD998727 | Oil pan remover | Oil pan removal |
| 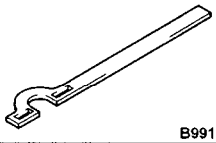  | MB991800 | Pulley holder | Crankshaft pulley holding |
| 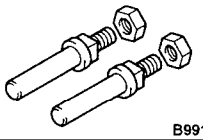  | MB991802 | Pin B | |
| 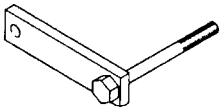 | MD998781 | Flywheel stopper | Flywheel<M/T> or drive plate<A/T> holding |
| 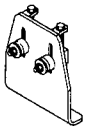 | MH063490 | Cam sprocket holder kit | Camshaft sprocket holding |

The following two pages to be added here.



Purchased from www.WorkshopManuals.co.uk

www.WorkshopManuals.co.uk

**<Added>**

| Tool | Number | Name | Use |
|---|---|---|---|
| A 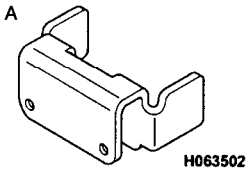  | MH063566<br>A: MH063502 | Timing chain tool set<br>A: Fixture tool (for 4M40) | Replacement of timing chain<br>(Since the 4M41 engine has a single timing chain, use only special tools for single chain.) |
| B 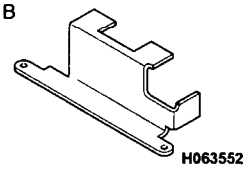  | B: MH063552 | B: Fixture tool (for 4M41) | |
| C 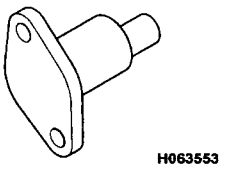  | C: MH063553 | C: Dummy tensioner (for 4M40) | |
| D 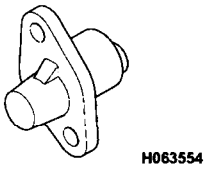  | D: MH063554 | D: Dummy tensioner (for 4M41) | |
| E 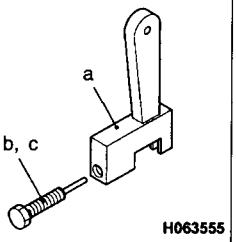  | E: MH063555<br>a: MH063556<br>b: MH063558<br>c: MH063557 | E: Chain disassembly tool<br>a: Body<br>b: Slider (for single chain)<br>c: Slider (for double chain) | |
| F 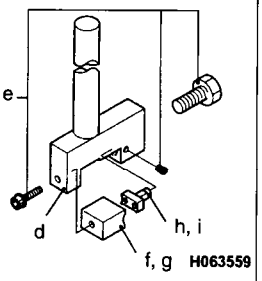  | F: MH063559<br>d: MH063560<br>e: MH063563<br>f: MH063564<br>g: MH063561<br>h: MH063565<br>i: MH063562 | F: Riveting tool<br>d: Holder<br>e: Set bolt<br>f: Die (for single chain)<br>g: Die (for double chain)<br>h: Punch (for single chain)<br>i: Punch (for double chain) | |



Purchased from www.WorkshopManuals.co.uk

www.WorkshopManuals.co.uk

**<Added>**

**Caution**
**Use individual special tools in the timing chain tool set (MH063566) appropriately according to the engine model and the type of timing chain.**

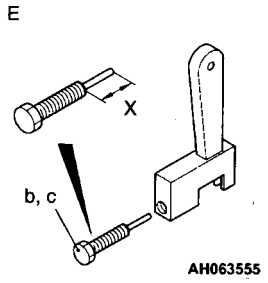


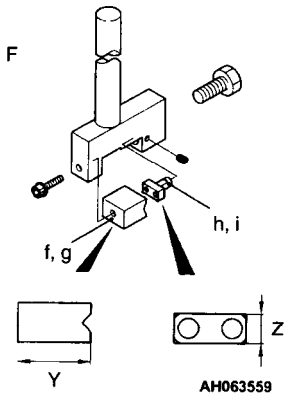


E: Chain disassembly tool (MH063555)

| Symbol | Size X mm | Tool No. | Tool Name |
|---|---|---|---|
| b | 13.5 | MH063558 | Slider (for single chain) |
| c | 22.5 | MH063557 | Slider (for double chain) |

F: Riveting tool (MH063559)

| Symbol | Size Y mm | Size Z mm | Tool No. | Tool Name |
|---|---|---|---|---|
| f | 18.0 | – | MH063564 | Die (for single chain) |
| g | 10.0 | – | MH063561 | Die (for double chain) |
| h | – | 9.6 | MH063565 | Punch (for single chain) |
| i | – | 9.0 | MH063562 | Punch (for double chain) |



Purchased from www.WorkshopManuals.co.uk

www.WorkshopManuals.co.uk



8. If there is a cylinder which compression or compression difference is outside the limit, pour a small amount of engine oil through the glow plug hole, and repeat the operations in steps 6 – 7.
   (1) If the compression increases after the oil is added, the cause of the malfunction is a worn or damaged piston ring and /or cylinder inner surface.
   (2) If the compression does not rise after the oil is added, the cause is a burnt or defective valve seat, or pressure is leaking from the gasket.
9. Connect the fuel cut solenoid valve connector.
10. Install the glow plugs.

To be followed by the subsequent pages.



Purchased from www.WorkshopManuals.co.uk

www.WorkshopManuals.co.uk

**<Added>**

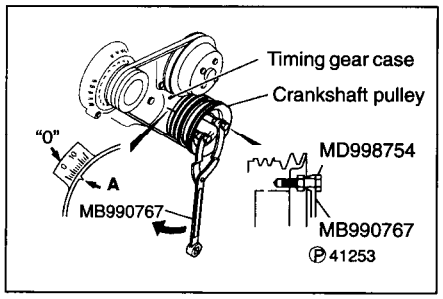


## TIMING CHAIN REPLACEMENT

If there is an abnormal noise caused by the interference of piston with valve when the engine is running, replace the timing chain by the following procedure.

1. Remove the fan coupling, front engine hanger, rocker cover, etc.
2. To check for timing mark positions, bring No. 1 piston to the top dead center of its compression stroke by turning the crankshaft pulley clockwise with the special tool until its notch A is aligned with the timing mark "0" on the timing gear case.

   NOTE
   No. 1 piston is at the top dead center if the projections B on the camshafts are on the upside.

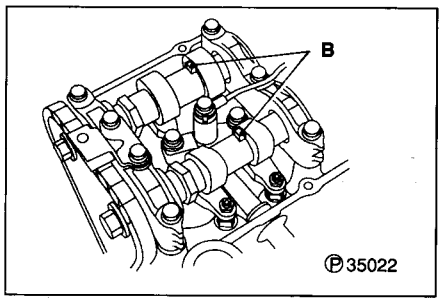


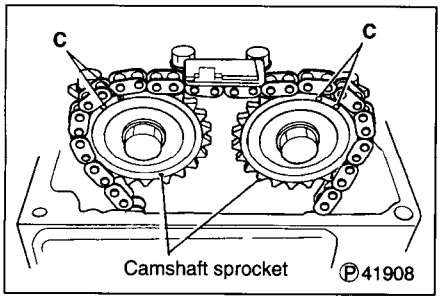


3. With No. 1 piston at the top dead center, make sure that each camshaft sprocket has its timing marks C in the illustrated position.

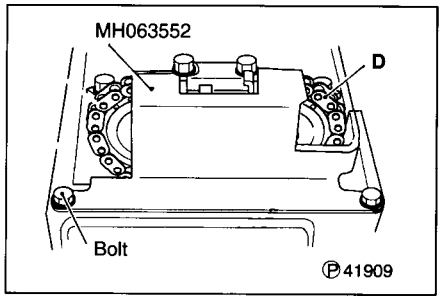


4. Secure the special tool to the cylinder head with bolts (M6 × 12mm).
5. Cranking by hand, move the timing chain until its blue mark plate D (1-piece mark) reaches the illustrated point and hold it in that position.

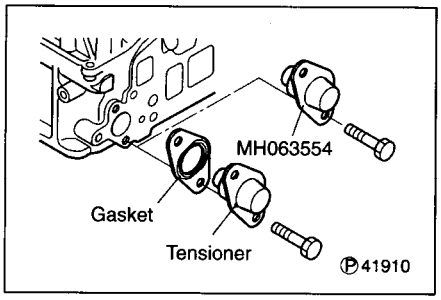


6. Remove the tensioner and gasket from the cylinder head.
7. Attach the special tool to the cylinder head.

   **Caution**
   **Stuff open spaces around the timing chain with shop rags to prevent parts from dropping in the timing gear case.**



Purchased from www.WorkshopManuals.co.uk

www.WorkshopManuals.co.uk

**<Added>**

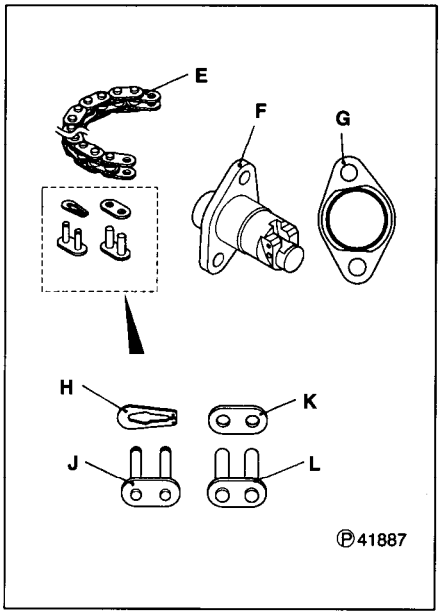


Component parts of timing chain kit (MH190552)
E: Timing chain
F: Tensioner
G: Gasket
H: Clip
J: Temporary link
K: Blue mark plate
L: Permanent link

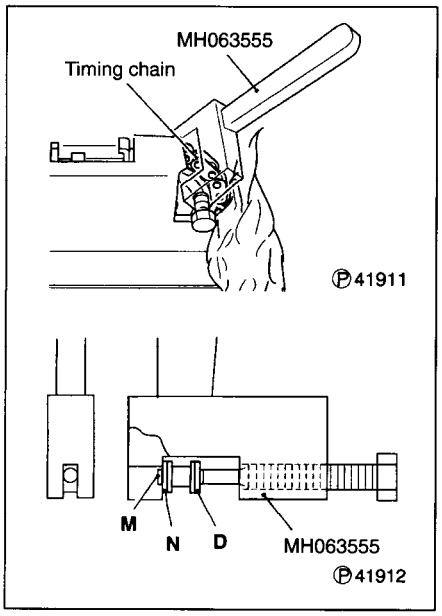


8. Extract the pins M from the blue mark plate D (1-piece mark) of the new timing chain with the special tool, then remove the blue mark plate and the plate N.

**Caution**

**(1) If the pins M are difficult to remove, thrust them out using the temporary link J of the timing chain kit from the front of the engine.**

**(2) Do not mix up the blue mark plate D, pins M and plate N removed with the parts in the timing chain kit.**

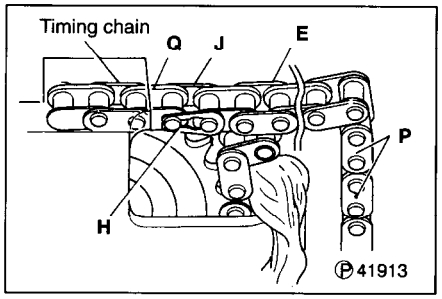


9. Hold the new timing chain E with its blue mark plates P (2-piece mark) facing toward the front and connect it to the separated timing chain end Q using the temporary link J and clip H.
10. Remove all shop rags from around the timing chain.



Purchased from www.WorkshopManuals.co.uk

www.WorkshopManuals.co.uk

**<Added>**

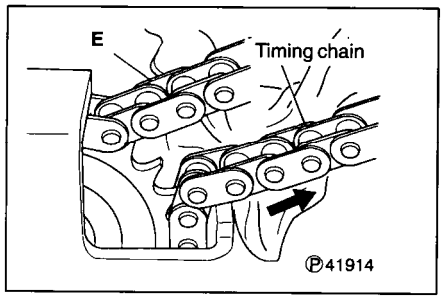


11. Slowly turn the engine clockwise by hand to feed the existing timing chain forward so that it is replaced with the new timing chain E.

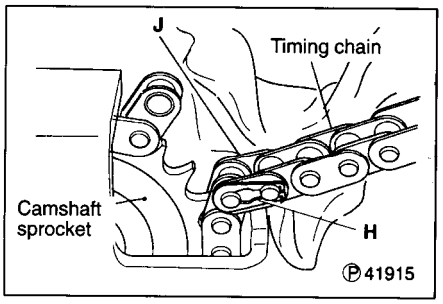


12. Stop feeding the timing chains when the temporary link J reaches the illustrated point of the camshaft sprocket, and hold it in that position.
13. Stuff open spaces around the timing chain with shop rags again. Remove the temporary link J to separate the superseded timing chain.

    **Caution**
    **Do not mix up the removed temporary link J and clip H with the other parts in the timing chain kit.**

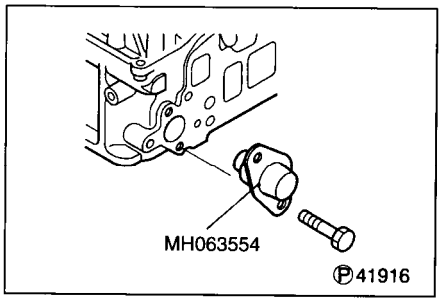


14. Remove the special tool from the cylinder head.

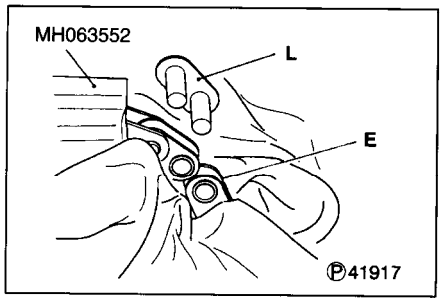


15. Connect both ends of the new timing chain E by fitting the permanent link L from the rear side.
16. Remove the special tool.

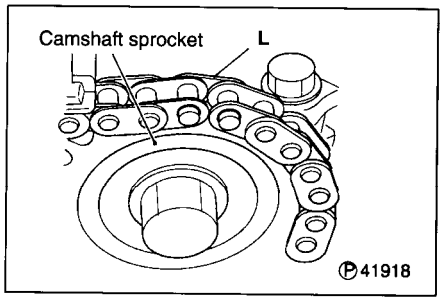


17. Cranking by hand, move the new timing chain until the permanent link L reaches the illustrated point of the intake camshaft sprocket, and hold it in that position.



Purchased from www.WorkshopManuals.co.uk

www.WorkshopManuals.co.uk

**<Added>**

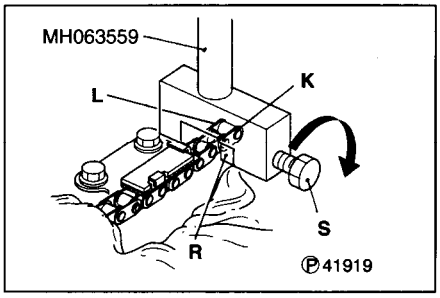


18. Attach the blue mark plate K to the punch R of the special tool.
19. Set the special tool such that the pins of the permanent link L are aligned with the mating holes in the blue mark plate K.
20. Fully tighten the bolt S of the special tool.

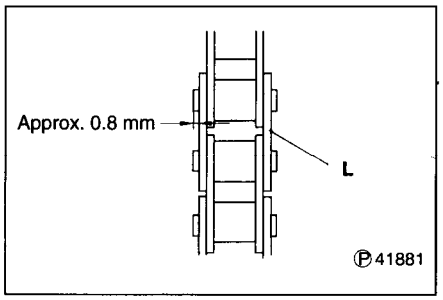


21. Make sure that the pins of the permanent link L protrude approximately 0.8 mm.

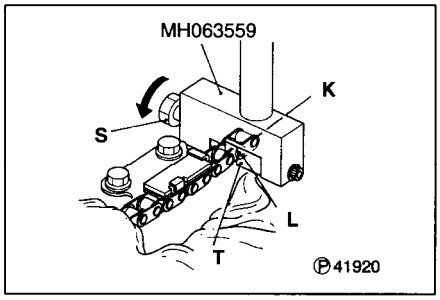


22. Reverse the special tool, and set its die T opposite to the blue mark plate K.
23. Tighten the bolt S of the special tool to a torque of approximately 64 Nm to head the pins of the permanent link L.

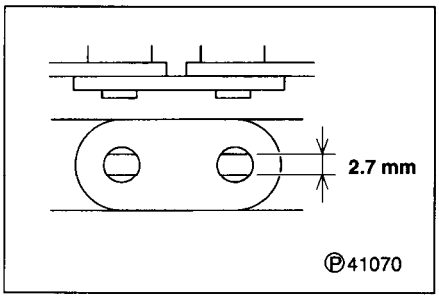


24. Make sure that the head width of each pin is 2.7 mm.
25. Remove shop rags from around the timing chain.

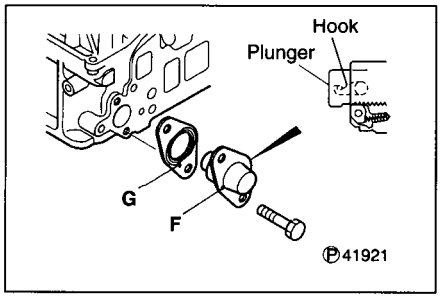


26. After ascertaining that the plunger of the new tensioner F is locked by the hook, fit the tensioner to the cylinder head together with the new gasket G.
27. Crank the engine clockwise.

    NOTE
    Cranking the engine clockwise disengages the hook of the tensioner F.



Purchased from www.WorkshopManuals.co.uk

www.WorkshopManuals.co.uk

**<Added>**

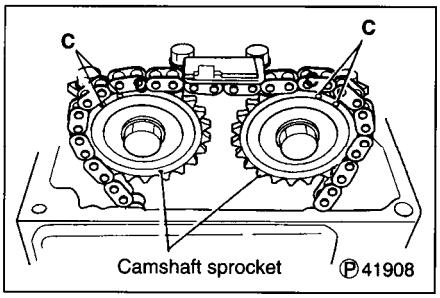


28. Make sure that the timing marks C on the camshaft sprockets, with No. 1 piston at the top dead center of its compression stroke, are in the same position as they were at the start of the work.
29. Install the rocker cover, front cover, fan coupling, etc. back in place.



Purchased from www.WorkshopManuals.co.uk

www.WorkshopManuals.co.uk

MITSUBISHI MOTORS

# SERVICE BULLETIN

QUALITY INFORMATION ANALYSIS
OVERSEAS SERVICE DEPT. MITSUBISHI MOTORS CORPORATION

| SERVICE BULLETIN | No.: MSB-00E11-501 | | |
|---|---|---|---|
| | Date: 2000-11-30 | <Model> | <M/Y> |
| Subject: CORRECTION TO A/C COMPRESSOR DRIVE BELT TENSION CHECK AND ADJUSTMENT | | (EC)PAJERO/MONTERO(V60,70) | 01-10 |
| Group: ENGINE | Draft No.: 00SY050819 | | |
| CORRECTION | INTERNATIONAL CAR ADMINISTRATION OFFICE | T.NITTA - PROJECT LEADER<br>AFTER SALES SERVICE & CS PROMOTION | |

**1. Description:**

On the 4M40 or 4M41 engine equipped vehicles, correction has been made to A/C compressor drive belt tension check and adjustment.

**2. Applicable Manuals:**

| Manual | Pub. No. | Language | Page(s) |
|---|---|---|---|
| 2001 PAJERO<br>Workshop Manual Chassis VOL.1 | PWJE0001 (1/2) | (English) | 11C-2, 3, 7 |
| 2001 MONTERO<br>Workshop Manual Chassis VOL.1 | PWJE0001 (1/2) | (Spanish) | |

Purchased from www.WorkshopManuals.co.uk

www.WorkshopManuals.co.uk

# GENERAL INFORMATION

| Items | | | 4M41 |
|---|---|---|---|
| Total displacement mℓ | | | 3,200 |
| Bore x Stroke mm | | | 98.5 x 105.0 |
| Compression ratio | | | 17.0 |
| Camshaft arrangement | | | DOHC |
| Number of valve | Intake | | 8 |
| | Exhaust | | 8 |
| Valve timing | Intake | Opening | BTDC 13° |
| | | Closing | ABDC 31° |
| | Exhaust | Opening | BBDC 55° |
| | | Closing | ATDC 17° |
| Fuel system | | | Distribution type injection pump |
| Rocker arm | | | Roller type |

# SERVICE SPECIFICATIONS

| Items | | | Standard value | Limit |
|---|---|---|---|---|
| Alternator drive belt (When inspection) | Vibration frequentcy Hz | | 122 – 161 | - |
| | Tension N | | 207 – 363 | - |
| | Deflection mm <Reference> | | 8 – 11 | - |
| Alternator drive belt (When adjustment) | Vibration frequentcy Hz | | 122 – 136 | - |
| | Tension N | | 207 – 259 | - |
| | Deflection mm <Reference> | | 10 – 11 | - |
| Alternator drive belt (When replacement) | Vibration frequentcy Hz | | 149 – 161 | - |
| | Tension N | | 311 – 363 | - |
| | Deflection mm <Reference> | | 8 – 9 | - |
| A/C compressor drive belt (When inspection) | Vibration frequentcy Hz | A | 177 – 191 | - |
| | | B | 145 – 156 | - |
| | Tension N | C | 343 – 392 | - |
| | Deflection mm <Reference> | C | 7.5 – 8.5 | - |
| A/C compressor drive belt (When adjustment) | Vibration frequentcy Hz | A | 177 – 191 | - |
| | | B | 145 – 156 | - |
| | Tension N | C | 343 – 392 | - |
| | Deflection mm <Reference> | C | 7.5 – 8.5 | - |
| A/C compressor drive belt (When replacement) | Vibration frequentcy Hz | A | 177 – 191 | - |
| | | B | 145 – 156 | - |
| | Tension N | C | 490 – 539 | - |
| | Deflection mm <Reference> | C | 6.0 – 6.5 | - |

| | |
|---|---|
| A | 169 – 189 |
| B | 111 – 124 |
| A | 285 – 355 |
| A | 7.0 – 8.0 |
| A | 169 – 189 |
| B | 111 – 124 |
| A | 285 – 355 |
| A | 7.0 – 8.0 |
| A | 207 – 223 |
| B | 135 – 146 |
| A | 425 – 500 |
| A | 6.0 – 6.5 |

**<Incorrect>** **<Correct>**


Purchased from www.WorkshopManuals.co.uk

www.WorkshopManuals.co.uk

| Items | | Standard value | Limit |
|---|---|---|---|
| Valve clearance (at cold engine) mm | Intake valve | 0.1 | - |
| | Exhaust valve | 0.15 | - |
| Injection timing | | 4°BTDC | - |
| Idle speed r/min | | 750 ± 20 | - |
| Compression pressure kPa-r/min | | 2,844-240 | 2,256-240 |
| Compression pressure difference of all cylinder kPa | | - | Maximum 294 |

NOTE

~~A: Between crankshaft pulley and tension pulley~~
~~B: Between crankshaft pulley and A/C compressor pulley~~
~~C: Between A/C compressor pulley and tension pulley~~

**<Incorrect>**

## SEALANTS AND ADHESIVES

| Items | Specified Sealants | Remark |
|---|---|---|
| Oil pan cover rubber | 3M ATD Part No. 8121 or equivalent | Quick fix adhesive |
| Engine cover insulator | | |
| Contact surface between timing gear case and crankcase assembly | 3M ATD Part No. 8660 or equivalent | Semi-drying sealant |
| Oil pan | MITSUBISHI GENUINE PART MD970389 or equivalent | |
| Timing gear case | | |

## SPECIAL TOOLS

| Tool | Number | Name | Use |
|---|---|---|---|
| 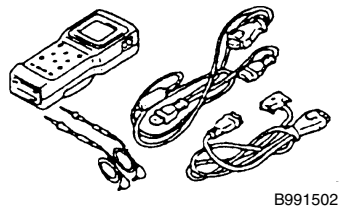 B991502 | MB991502 | MUT-II Sub-assembly | • Drive belt tension measurement<br>• Fuel infection timing check and adjustment<br>• Idle speed check |
| 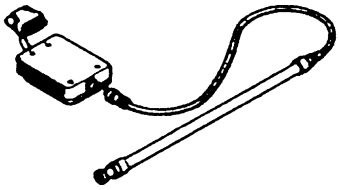 B991668 | MB991668 | Belt tension meter set | Drive belt tension measurements (Use with MUT-II) |
| 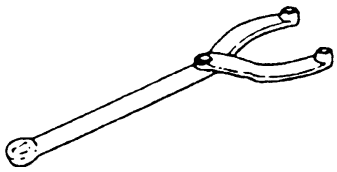 | MB990767 | Endyoke holder | Crankshaft pulley holding |
| 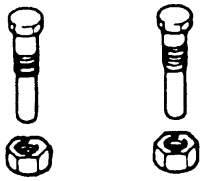 | MD998754 | Pulley holder pin | |

A: Between A/C compressor pulley and tension pulley
B: Between A/C compressor pulley and crankshaft pulley

**<Correct>**


Purchased from www.WorkshopManuals.co.uk

www.WorkshopManuals.co.uk


<Incorrect>

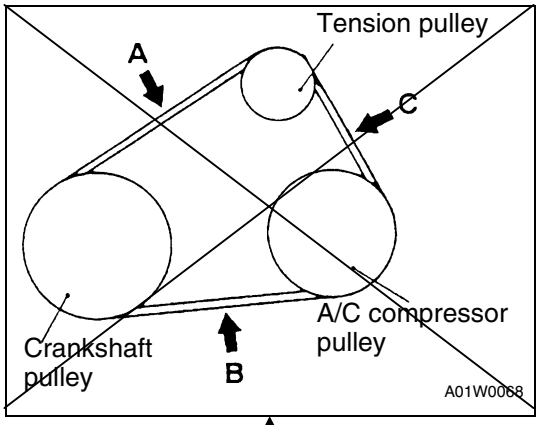


<Correct>

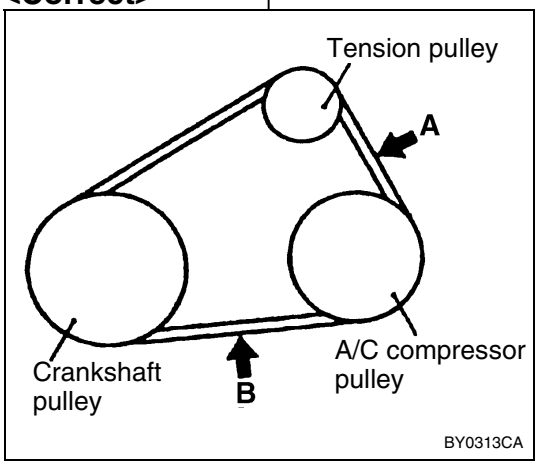


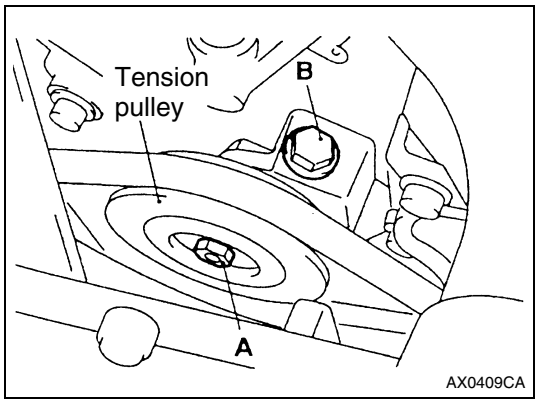


**A/C compressor drive belt tension check and adjustment<Vehicles with A/C>**

1. Check the drive belt tension by the following procedures.

**Standard value:**

| Item | | During inspection | During adjustment | During replacement |
|---|---|---|---|---|
| Vibration frequency Hz | A | 177 - 191 | 177 - 191 | 177 - 191 |
| | B | 145 - 156 | 145 - 156 | 145 - 156 |
| Tension N | C | 343 - 392 | 343 - 392 | 490 - 539 |
| Deflection mm <Reference> | C | 7.5 - 8.5 | 7.5 - 8.5 | 6.0 - 6.5 |

<Incorrect>

**<When using MUT-II>**

Gently tap the centre of the belt between the pulleys (arrows A and B), and check that the belt vibration frequency is within the standard value.

NOTE

For the vibration frequency measurement using the MUT-II, refer to P.11C-5.

**<When using a tension Gauge>**

Place a belt tension gauge at the centre between the pulleys (arrow C) to check the belt tension is within the standard value.

<Incorrect>

**<When checking the deflection>**

Apply approx. 100 N of pressure against the location between the pulleys shown by the arrow C in the illustration and then measure the deflection.

<Incorrect>

<Correct> A

2. If not within the standard value, adjust the belt tension by the following procedure.
   (1) Loosen the tension ;pulley securing bolt A.
   (2) Use the adjusting bolt B to adjust the belt deflection.
   (3) Tighten the securing bolt A to the specified torque.

   **Tightening torque: 44 ± 10 N·m**

   (4) Check the belt tension, and readjust if necessary.

   **Caution**
   **When checking the belt tension, turn the crankshaft clockwise one turn or more.**

| | | | |
|---|---|---|---|
| A | 169 - 189 | 169 - 189 | 207 - 223 |
| B | 111 - 124 | 111 - 124 | 135 - 146 |
| A | 285 - 355 | 285 - 355 | 425 - 500 |
| A | 7.0 - 8.0 | 7.0 - 8.0 | 6.0 - 6.5 |

<Correct>



Purchased from www.WorkshopManuals.co.uk

www.WorkshopManuals.co.uk

# SERVICE BULLETIN

MITSUBISHI MOTORS

QUALITY INFORMATION ANALYSIS
OVERSEAS SERVICE DEPT. MITSUBISHI MOTORS CORPORATION

| SERVICE BULLETIN | No.: MSB-00E11-505 | | |
|---|---|---|---|
| | Date: 2001-07-05 | <Model> | <M/Y> |
| Subject: CORRECTION TO REMOVAL/INSTALLATION PROCEDURE FOR BEARING BLOCK | | (EC)PAJERO/MONTERO(V60,V70) | 01-10 |
| Group: ENGINE | Draft No.: 00SY083009 | | |
| CORRECTION | INTERNATIONAL CAR ADMINISTRATION OFFICE | T.MASAKI-MANAGER TECHNICAL SERVICE PLANNING | |

**1. Description:**

On the vehicle equipped with the 4M41 engine, corrections have been made to the REMOVAL/INSTALLATION procedure for the bearing block.

**2. Applicable Manuals:**

| Manual | Pub. No. | Language | Page(s) |
|---|---|---|---|
| 2001 PAJERO Workshop Manual VOL.1 | PWJE0001 (1/2) | (English) | 11C-4, 17, 19, 20 |
| 2001 MONTERO Workshop Manual VOL.1 | PWJS0002 (1/2) | (Spanish) | |
| 2001 PAJERO/MONTERO Workshop Manual CD-ROM | PWJT0008R | (English) | |
| | PWJT0008R | (Spanish) | |
| | PWJT0008R | (French) | |
| | PWJT0008R | (German) | |

Purchased from www.WorkshopManuals.co.uk

www.WorkshopManuals.co.uk

| Tool | Number | Name | Use |
|---|---|---|---|
| 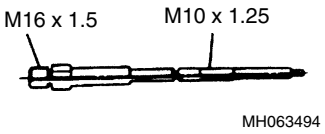  | MH063494 | Compression gauge adapter | Compression pressure check |
| 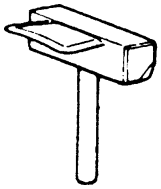 | MD998727 | Oil pan remover | Oil pan removal |
| 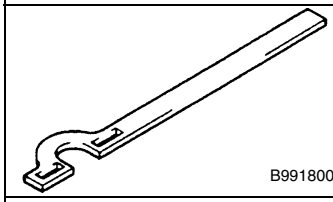  | MB991800 | Pulley holder | Crankshaft pulley holding |
| 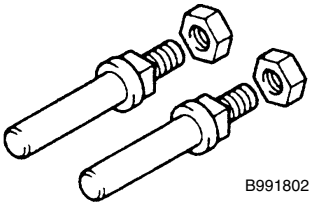  | MB991802 | Pin B | |
| 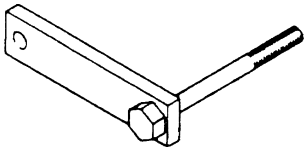 | MD998781 | Flywheel stopper | Flywheel<M/T> or drive plate<A/T> holding |
| 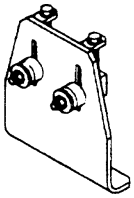 | MH063490 | Cam sprocket holder kit | Camshaft sprocket holding |

**<Added>**

| | | | |
|---|---|---|---|
| 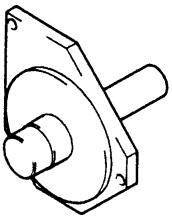  | MH063497 | Bearing installer | Bearing block installation |


Purchased from www.WorkshopManuals.co.uk

www.WorkshopManuals.co.uk


# TIMING CHAIN

## REMOVAL AND INSTALLATION

Pre-removal and Post-installation Operation
- Engine Coolant Drain and Refill (Refer to GROUP 14 – On-vehicle Service.)
- Under Cover and Skid Plate Removal and Installation
- Engine Oil Draining and Refilling. (Refer to GROUP 12 – On-vehicle Service.)
- Fuel Line Air-bleeding (Refer to GROUP 13C – On-vehicle Service.) <Post-installation operation>
- Drive Belt Tension Check and Adjustment (Refer to P.11C-5.) <Post-installation operation>
- Camshaft Removal and Installation (Refer to P.11C-23.)
- Cooling Fan and Fan Clutch Assembly Removal and Installation (Refer to GROUP 14.)
- Vacuum Pump Removal and Installation (Refer to P.11C-16.)
- Oil Pan Removal and Installation (Refer to P.11C-14.)

**<Incorrect>**

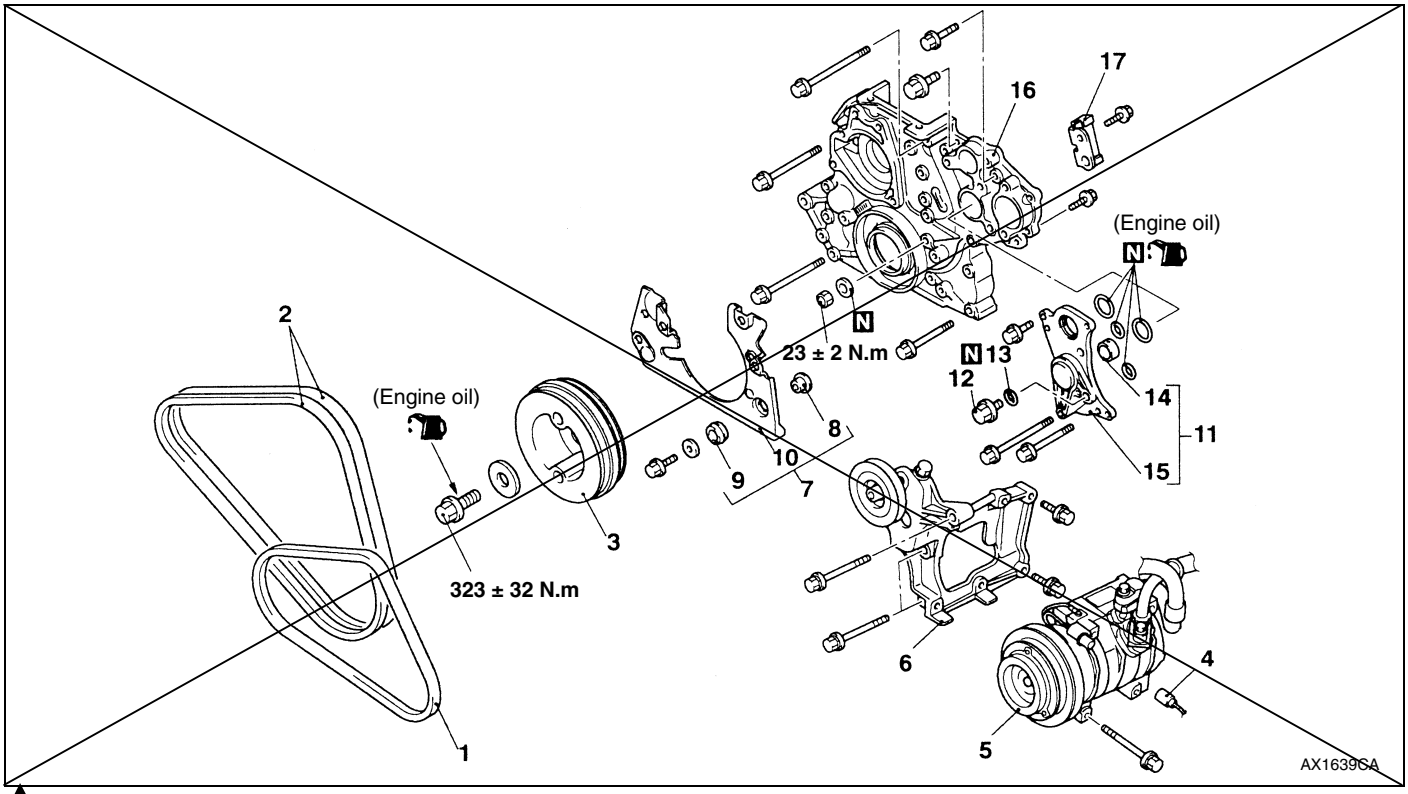


**Removal steps**

◄A► 1. A/C compressor drive belt <Vehicles with A/C>

◄B► 2. Alternator drive belt

3. Crankshaft pulley

◄C►
- Alternator (Refer to GROUP 16.)
- Water pump (Refer to GROUP 14.)
- Cylinder Head Assembly (Refer to P.11C-27.)

4. A/C compressor connector <Vehicles with A/C>
5. A/C compressor <Vehicles with A/C>
6. A/C compressor bracket and tension pulley assembly<Vehicles with A/C>
7. Timing gear case cover assembly
8. Insulator collar
9. Insulator
10. Timing gear case cover

**<Incorrect>**

►B◄ 11. Bearing block assembly
12. Drain plug
13. Drain plug gasket
14. Bearing block bushing
15. Bearing block

►B◄ 16. Timing gear case
17. Lower guide plate

**<Correct>**

11. Drain plug
12. Drain plug gasket
13. Timing gear case stay
- Injection pump (Refer to GROUP 13C.)

14. Timing gear case stiffener

►C◄ 15. Bearing block

See next page.


Purchased from www.WorkshopManuals.co.uk

www.WorkshopManuals.co.uk

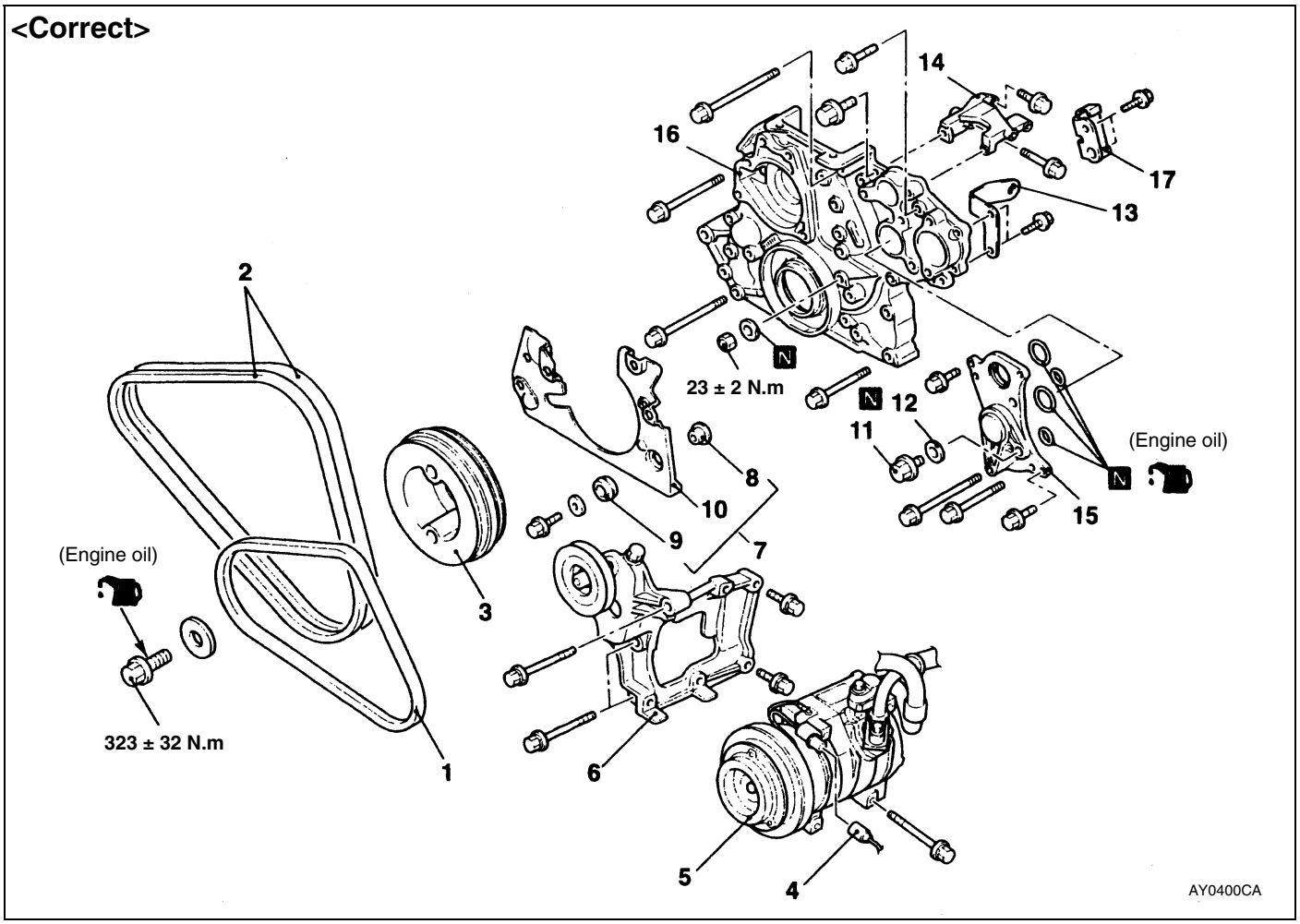




Purchased from www.WorkshopManuals.co.uk

www.WorkshopManuals.co.uk


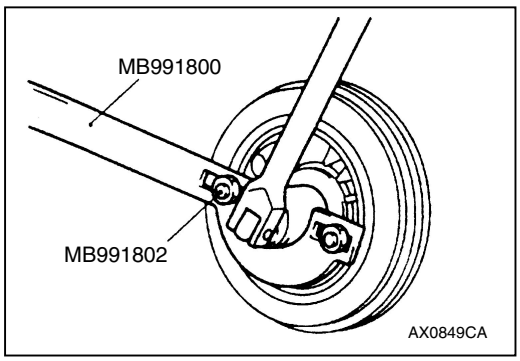


## ◄C► CRANKSCHAFT PULLEY REMOVAL

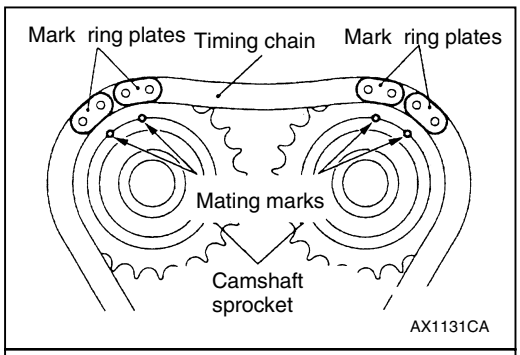


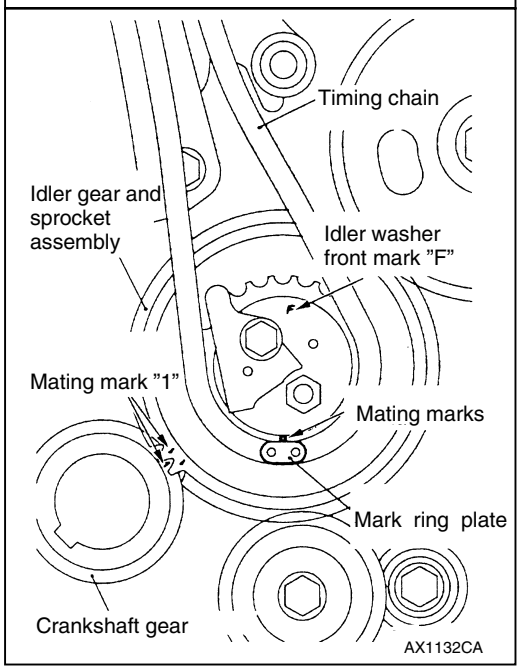


## INSTALLATION SERVICE POINTS

### ►A◄ TIMING CHAIN/CAMSHAFT SPROCKET/IDLER WASHER/SPRING PIN/OIL JET INSTALLATION

1. Check that the mating mark on the idler gear and sprocket assembly is aligned with mating mark "1" on the crankshaft gear.
2. Align the mating mark on the idler gear and sprocket assembly with the dark blue mark ring plate on the timing chain.

   **Caution**
   **Note that the timing chain has one mark ring plate for the idler gear and sprocket assembly side, and two mark ring plates for each camshaft sprocket.**

3. Align the mark ring plates with the camshaft sprocket mating marks.
4. Tie up the timing chain and the camshaft sprocket with a cord to prevent the mating mark misalignment.
5. Install the idler washer front mark "F" must face toward the front of the engine.

<Incorrect>

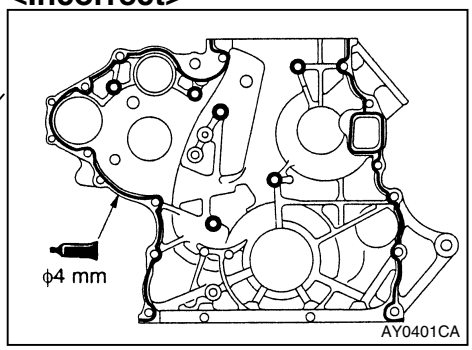


<Incorrect>

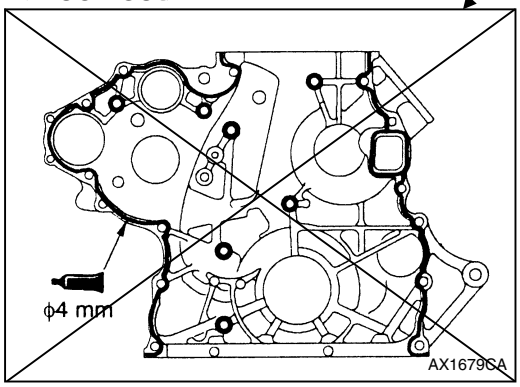


### ►B◄ TIMING GEAR CASE/BEARING BLOCK ASSEMBLY INSTALLATION

1. Clean the timing gear case and the front plate mating surfaces with a scraper or a wire brush.
2. Apply a continuous bead of the specified sealant to the timing gear case-mating surface as shown.

   **Specified sealant:**
   **MITSUBISHI GENUINE PART MD970389 or equivalent**



Purchased from www.WorkshopManuals.co.uk

www.WorkshopManuals.co.uk

3. After applying the sealant, install the gear case within 15 minutes.

Timing <Added>

**Caution**

**(1) When installing the timing gear case, be careful not to disturb the sealant.**

**(2) Whenever the timing gear case mounting bolts are loosened or tightened again after the timing gear case installation, always apply the sealant again.**

**(3) After the timing gear case is installed, wait for at least one hour, and then start the engine.**

**<Incorrect>**

4. Install the mounting nuts and bolts to the timing gear case and the bearing block assembly at the shown positions.

**Timing gear case**

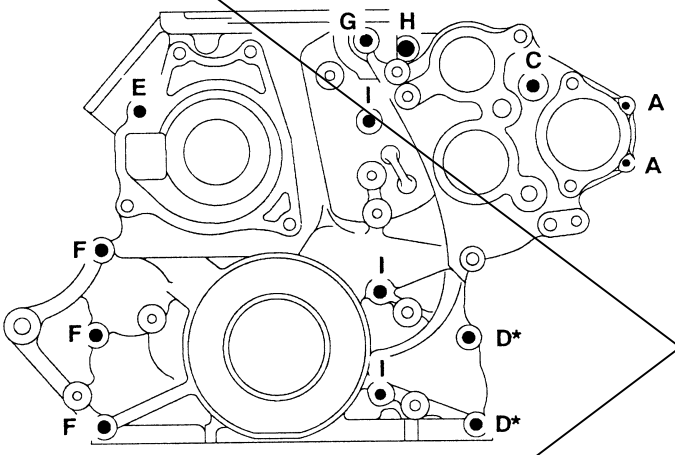


BX1666CA

**Bearing block assembly**

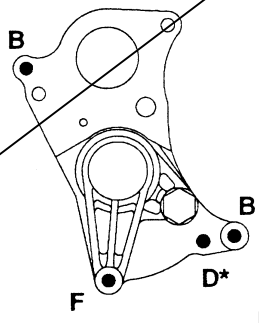


BX1667CA

| Name | Symbol | Size mm (D x L) | Name | Symbol | Size mm (D x L) |
|---|---|---|---|---|---|
| Flange bolt | A | 6 x 20 | Flange bolt | F | 8 x 85 |
| | B | 8 x 30 | | G | 8 x 90 |
| | C | 8 x 50 | | H | 10 x 35 |
| | D* | 8 x 60 | Cap nut | I | - |
| | E | 8 x 75 | | | |

D= Nominal diameter
L= Nominal length
*: Vehicles without A/C

See next page.


Purchased from www.WorkshopManuals.co.uk

www.WorkshopManuals.co.uk



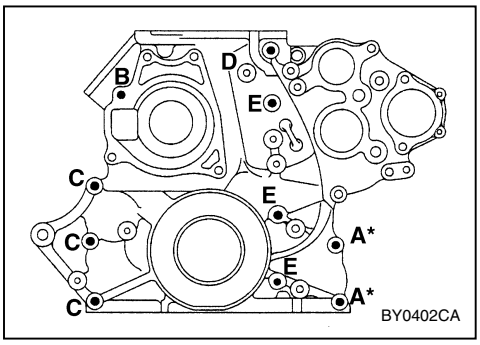


4. Install the mounting nuts and bolts to the timing gear case at the shown positions.

| Name | Symbol | Quantity | Size mm (D x L) |
|---|---|---|---|
| Flange bolt | A* | 2 | 8 x 60 |
| | B | 1 | 8 x 75 |
| | C | 3 | 8 x 85 |
| | D | 1 | 8 x 90 |
| Cap nut | E | 3 | - |

D= Nominal diameter
L= Nominal length
*: Vehicles without A/C

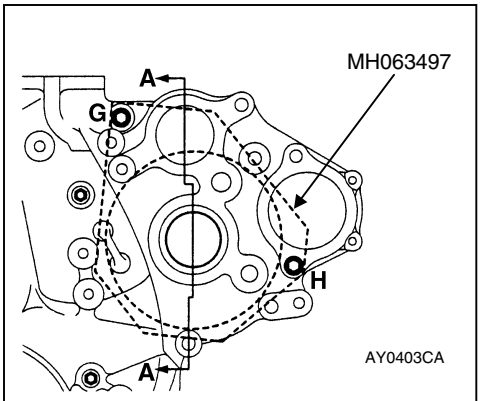


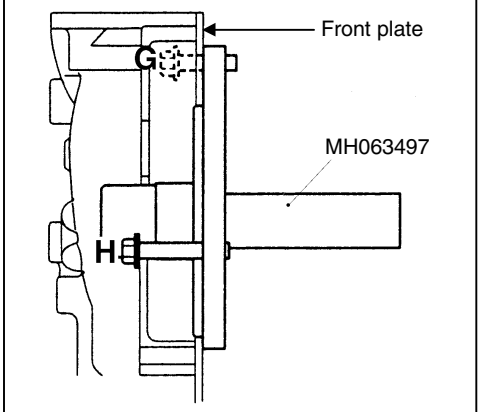


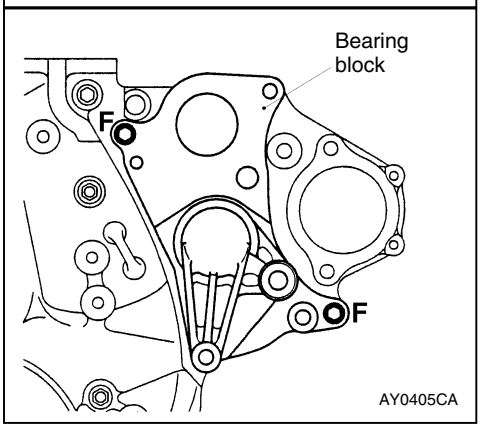


## ►C◄ BEARING BLOCK INSTALLATION

1. Install the special tool on the front plate with flange bolts G and H.
2. Install the bearing block over the special tool.
3. Using flange bolts F. install the bearing block to the timing gear case.
4. Remove the special tool.

| Name | Symbol | Quantity | Size mm (D × L) |
|---|---|---|---|
| Flange bolt | F | 2 | 8 x 30 |
| | G | 1 | 8 x 35 |
| | H | 1 | 8 x 50 |

D= Nominal diameter
L= Nominal length



Purchased from www.WorkshopManuals.co.uk

www.WorkshopManuals.co.uk

MITSUBISHI MOTORS

# SERVICE BULLETIN

TECHNICAL SERVICE PLANNING
INTERNATIONAL CAR ADMINISTRATION OFFICE. MITSUBISHI MOTORS CORPORATION

| SERVICE BULLETIN | NO. : MSB-00E11-506 | |
|---|---|---|
| | DATE : 2000-11-20 | <MODEL> (EC)PAJERO/ MONTERO(V60,70) <M/Y> 01-10 |
| SUBJECT : ESTABLISHMENT OF STANDARD VALUES OF VALVE CLEARANCE WHEN ENGINE IS HOT | | |
| GROUP : ENGINE | DRAFTNO. : 00SY590610 | |
| CORRECTION | INTERNATIONAL CAR ADMINISTRATION OFFICE | T. Masaki<br>T. MASAKI - MANAGER<br>TECHNICAL SERVICE PLANNING |

## 1. Description:

For the valve clearance inspection and adjustment of the 4M41 engine, the standard values of valve clearance when the engine is hot (cooling water temperature at 80 to 95°C) have been established.

## 2. Applicable Manuals:

| Manual | Pub. No. | Page |
|---|---|---|
| 2001 PAJERO<br>Workshop Manual Chassis Vol. 1 | PWJE0001 (1/2) (English) | 11C-8 |
| 2001 MONTERO<br>Workshop Manual Chassis Vol. 1 | PWJS0002 (1/2) (Spanish) | |
| 2001 PAJERO/MONTERO<br>Workshop Manual CD-ROM | PWJT0008R (English/<br>Spanish/French/German) | |

## 3. Details:

Standard values of valve clearance when the engine is hot (cooling water temperature at 80 to 95°C):

Intake valve: 0.15 mm
Exhaust valve: 0.20 mm

* The valve clearance inspection and adjustment procedures are the same as the conventional ones except those procedures to be followed when the engine is hot (cooling water temperature at 80 to 95°C).



Purchased from www.WorkshopManuals.co.uk

www.WorkshopManuals.co.uk

# ENGINE LUBRICATION

**Click on the applicable bookmark to selected the required model year.**

Purchased from www.WorkshopManuals.co.uk

www.WorkshopManuals.co.uk


# ENGINE LUBRICATION

## CONTENTS

GENERAL INFORMATION . . . . . 2
SERVICE SPECIFICATIONS . . . . . 3
SEALANT . . . . . 3
LUBRICANTS . . . . . 3
SPECIAL TOOLS . . . . . 3
ON-VEHICLE SERVICE . . . . . 4
Engine Oil Check . . . . . 4
Engine Oil Replacement . . . . . 4
Oil Filter Replacement . . . . . 5
Oil Pressure Check . . . . . 6
ENGINE OIL COOLER . . . . . 9

Purchased from www.WorkshopManuals.co.uk

www.WorkshopManuals.co.uk

# GENERAL INFORMATION

The lubrication method is a fully force-fed, full-flow filtration type.

An oil cooler with high cooling performance and which is built into the crankcase has been adopted. <4M4>

| Items | 6G7 | 4D5 | 4M4 |
|---|---|---|---|
| Oil pump type | Trochoid type | External gear type | External gear type |
| Drive method | Crankshaft | Crankshaft gear | Crankshaft gear |

## ENGINE OILS

### Health Warning

Prolonged and repeated contact with mineral oil will result in the removal of natural fats from the skin, leading to dryness, irritation and dermatitis. In addition, used engine oil contains potentially harmful contaminants which may cause skin cancer. Adequate means of skin protection and washing facilities must be provided.

### Recommended Precautions

The most effective precaution is to adapt working practices which prevent, as far as practicable, the risk of skin contact with mineral oils, for example by using enclosed systems for handling used engine oil and by degreasing components, where practicable, before handling them.
Other precautions:

- Avoid prolonged and repeated contact with oils, particularly used engine oils.
- Wear protective clothing, including impervious gloves where practicable.
- Avoid contaminating clothes, particularly underpants, with oil.
- Do not put oily rags in pockets, the use of overalls without pockets will avoid this.
- Do not wear heavily soiled clothing and oil-impregnated foot-wear. Overalls must be cleaned regularly and kept separate from personal clothing.
- Where there is a risk of eye contact, eye protection should be worn, for example, chemical goggles or face shields; in addition an eye wash facility should be provided.
- Obtain First Aid treatment immediately for open cuts and wounds.
- Wash regularly with soap and water to ensure all oil is removed, especially before meals (skin cleansers and nail brushes will help). After cleaning, the application of preparations containing lanolin to replace the natural skin oils is advised.
- Do not use petrol, kerosine, diesel fuel, gas oil, thinners or solvents for cleaning skin.
- Use barrier creams, applying them before each work period, to help the removal of oil from the skin after work.
- If skin disorders develop, obtain medical advice without delay.

Purchased from www.WorkshopManuals.co.uk

www.WorkshopManuals.co.uk

# SERVICE SPECIFICATIONS

| Item | | | Standard value | Limit |
|---|---|---|---|---|
| Oil pressure kPa | 6G7, 4D5 | at idle | 29 or more | - |
| | | at 3,500 r/min | 294 - 686 | - |
| | 4M4 | During minimum engine speed with no load | 145 or more | 49 or more |
| | | During maximum engine speed with no load | 295 - 490 | 195 |

# SEALANT

| Item | Specified sealant | Remark |
|---|---|---|
| Oil pressure switch | 3M ATD Part No. 8660 or equivalent | - |

# LUBRICANTS

| Items | | 6G7 | 4D5 | 4M4 |
|---|---|---|---|---|
| Engine oil API classification | | SG or higher | CD or higher | CD or higher |
| Engine oil quantity litre | Oil filter | 0.3 | 0.8 | 1.0 |
| | Oil cooler | - | 0.4 | 1.3 |
| | Total | 4.6 | 6.5 | 9.8 |

# SPECIAL TOOLS

| Tool | Number | Name | Use |
|---|---|---|---|
| 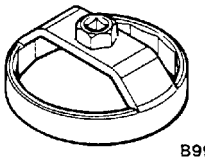 B991610 | MB991610 | Oil filter wrench | Removal and installation of engine oil filter (When using the oil filter of MD352626) |
| 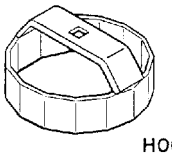 H061590 | MH061590 | Oil filter wrench | Removal and installation of engine oil filter (When using the oil filter of MD069782 or MD326489 or ME013307) |
| 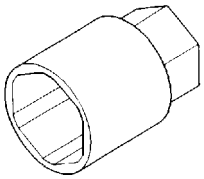 | MD998054 <6G7, 4D5> MD998012 <4M4> | Oil pressure switch wrench | Removal and installation of oil pressure switch |

Purchased from www.WorkshopManuals.co.uk

www.WorkshopManuals.co.uk

# ON-VEHICLE SERVICE

## ENGINE OIL CHECK

1. Pull out the level gauge slowly and check that the oil level is in the illustrated range.
2. Check that the oil is not excessively dirty, that there is no coolant or petrol mixed in, and that it has sufficient viscosity.

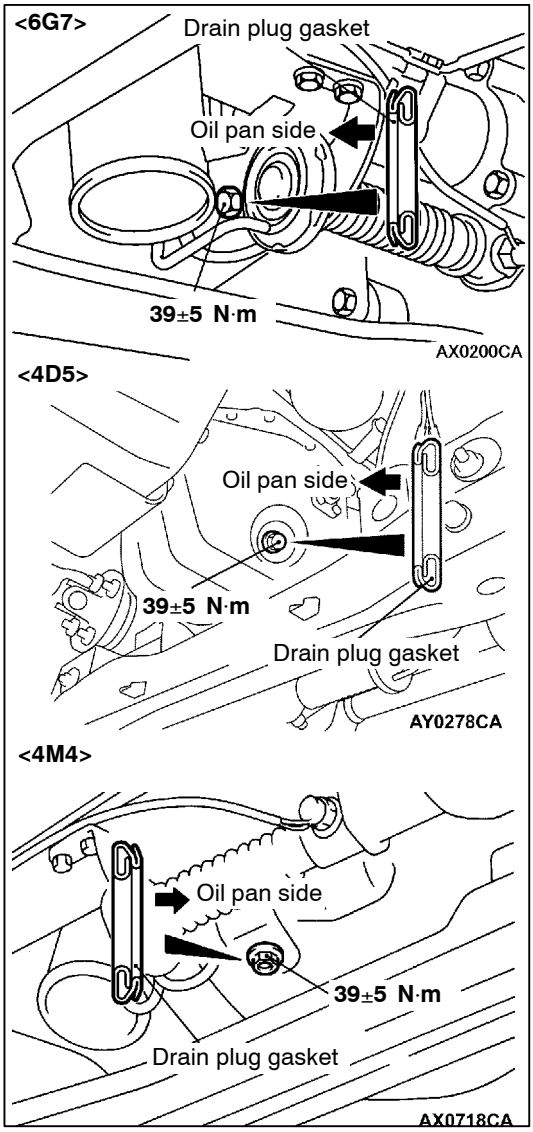


## ENGINE OIL REPLACEMENT

1. Start the engine and allow it to warm up until the temperature of the coolant reaches 80°C to 90°C.
2. Remove the engine oil filler cap.
3. Remove the drain plug to drain oil.

   **Caution**
   **Use care as oil could be hot.**

4. Install a new drain plug gasket so that it faces in the direction shown in the illustration, and then tighten the drain plug to the specified torque.

   NOTE
   Install the drain plug gasket so it faces in the direction shown in the illustration.

Purchased from www.WorkshopManuals.co.uk

www.WorkshopManuals.co.uk

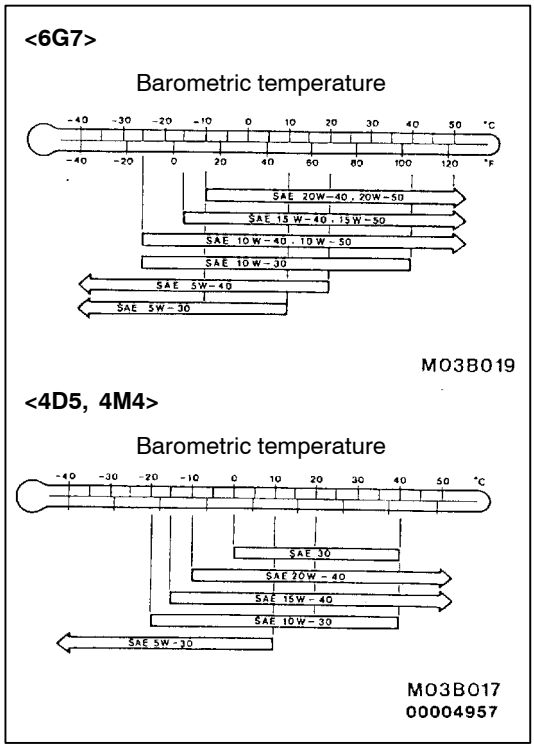


5. Refill with specified quantity of oil.

   **Specified Engine Oil (API classification):**
   **<6G7> SG or higher**
   **<4D5, 4M4> CD or higher**

   **Total quantity (Includes volume inside oil filter and oil cooler):**
   **<6G7> 4.6 litre**
   **<4D5> 6.5 litre**
   **<4M4> 9.8 litre**

6. Install the engine oil filler cap.
7. Check oil level.

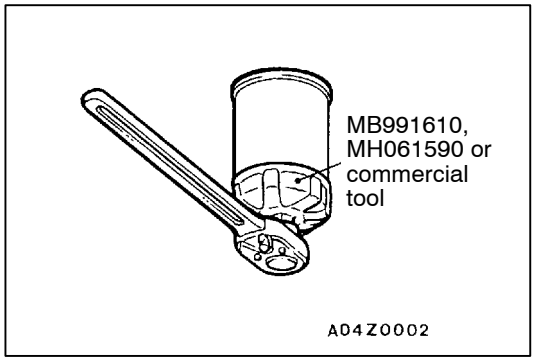


## OIL FILTER REPLACEMENT

1. Start the engine and allow it to warm up until the temperature of the coolant reaches 80°C to 90°C.
2. Remove the engine oil filler cap.
3. Remove the drain plug to drain oil.

   **Caution**
   **Use care as oil could be hot.**

4. Remove the under cover.
5. Use the respective tool in the following table to remove the engine oil filter.
6. Clean the filter bracket side mounting surface.

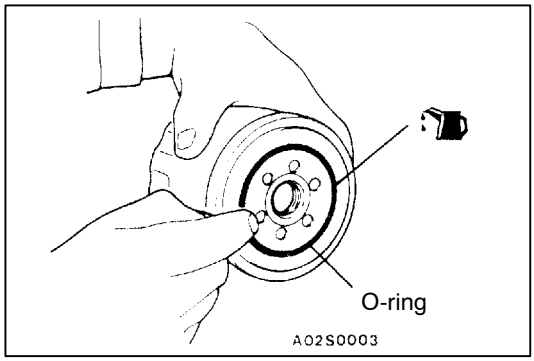


7. Apply a small amount of engine oil to the O-ring of the new oil filter.
8. Once the O-ring of the oil filter is touching the flange, use the respective tool in the following table to tighten to the specified torque.
9. Install the drain plug and refill the engine oil. (Refer to Engine Oil Replacement P.12-4.)

Purchased from www.WorkshopManuals.co.uk

www.WorkshopManuals.co.uk

10. Race the engine 2-3 times, and check to be sure that no engine oil leaks from installation section of the oil filter.

| Number | Tool | Tightening torque |
|---|---|---|
| MD352626 | MB991610 or equivalent tool | Approx. 3/4 turn (14±2 N·m) |
| ME013307 | MH061590 or equivalent tool | Approx. 3/4 turn (20±2 N·m) |
| MD069782 | MH061590 or equivalent tool | Approx. 5/8 turn (20±2 N·m) |

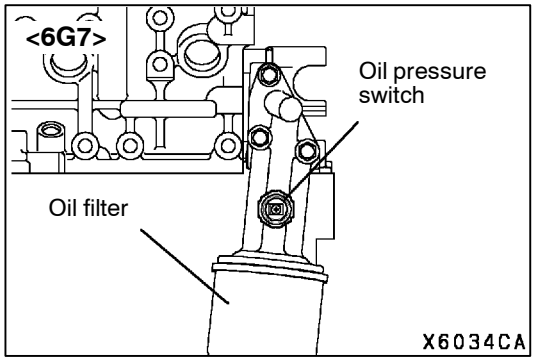


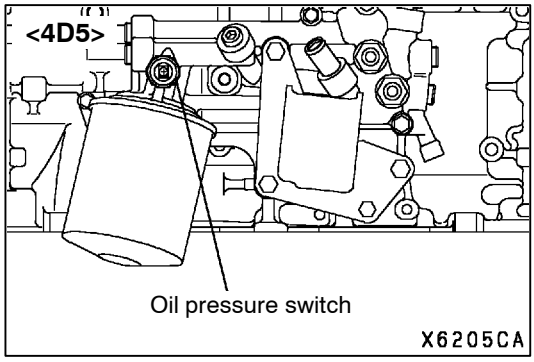


## OIL PRESSURE CHECK

**<6G7, 4D5>**

1. Check engine oil quantity.
2. Remove the oil pressure switch terminal.

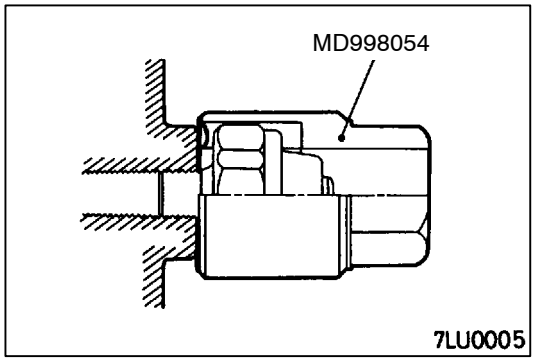


3. Use the special tool (oil pressure switch wrench) to remove the oil pressure switch.

   **Caution**
   **Since sealant is applied to the thread of oil pressure switch, take care not to damage the oil pressure switch when removing it.**

Purchased from www.WorkshopManuals.co.uk

www.WorkshopManuals.co.uk

4. Install the oil pressure gauge.

   NOTE
   Use a adapter of PT 1/8 thread.

5. Run the engine to warm it.
6. After the engine has been warmed up, check that oil pressure is within the standard value.

   **Standard value:**

   **At idle: 29 kPa or more**

   **At 3,500 r/min: 294 - 686 kPa**

7. Remove the oil pressure gauge.

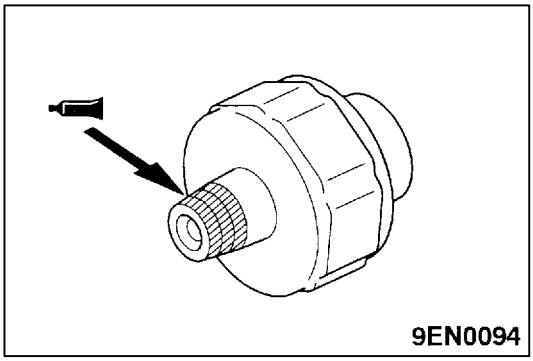


8. Apply the specified sealant to the thread of oil pressure switch.

   **Specified sealant: 3M ATD Part No. 8660 or equivalent**

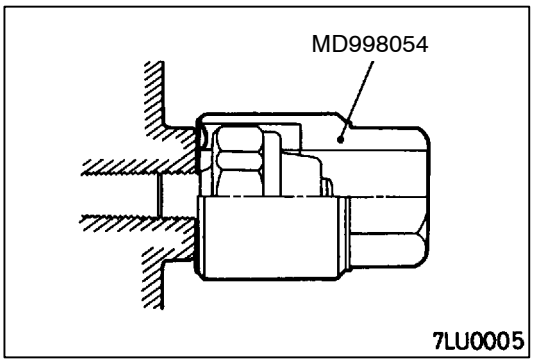


9. Use the special tool to tighten the oil pressure switch to the specified torque.

   **Tightening torque: 10 N·m**

   **Caution**
   **Do not start the engine within one hour after the oil pressure switch has been installed.**

10. Install the oil pressure switch terminal.

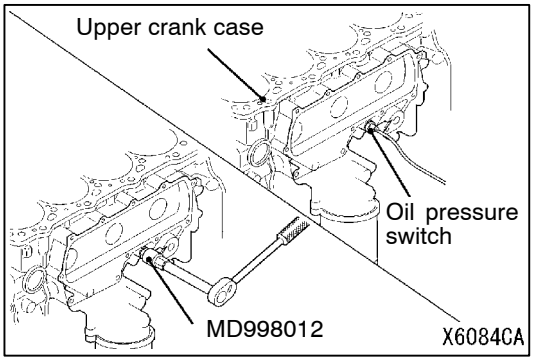


**<4M4>**

1. Check engine oil quantity.
2. Remove the oil pressure switch terminal.
3. Use the special tool (oil pressure switch wrench) to remove the oil pressure switch.

   **Caution**
   **Since sealant is applied to the thread of oil pressure switch, take care not to damage the oil pressure switch when removing it.**

Purchased from www.WorkshopManuals.co.uk

www.WorkshopManuals.co.uk

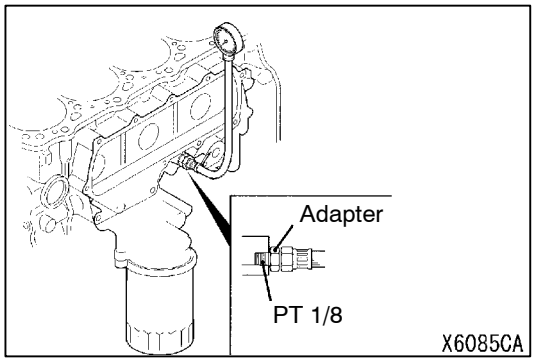


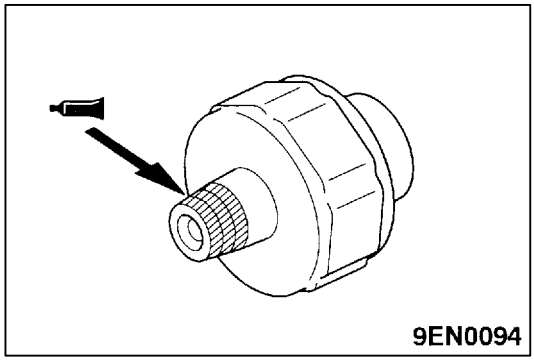


4. Install the oil pressure gauge.

   NOTE
   Use a adapter of PT 1/8 thread.

5. Run the engine to warm it.
6. After the engine has been warmed up, check that oil pressure is within the standard value.

   **Standard value:**
   **During minimum engine speed with no load: 145 kPa or more**
   **During maximum engine speed with no load: 295 - 490 kPa**

   **Limit:**
   **During minimum engine speed with no load: 49 kPa or more**
   **During maximum engine speed with no load: 195 kPa**

7. Remove the oil pressure gauge.
8. Apply the specified sealant to the thread of oil pressure switch.

   **Specified sealant: 3M ATD Part No. 8660 or equivalent**

9. Use the special tool to tighten the oil pressure switch to the specified torque.

   **Tightening torque: 12 N·m**

   **Caution**
   **Do not start the engine within one hour after the oil pressure switch has been installed.**

10. Install the oil pressure switch terminal.

Purchased from www.WorkshopManuals.co.uk

www.WorkshopManuals.co.uk

# ENGINE OIL COOLER

## REMOVAL AND INSTALLATION

**<6G7>**

**Pre-removal Operation**
- Skid Plate and Under Cover Removal
- Radiator Shroud Lower Cover Removal (Refer to GROUP 14 - Radiator.)

**Post-installation Operation**
- Skid Plate and Under Cover Installation
- Radiator Shroud Lower Cover Installation (Refer to GROUP 14 - Radiator.)
- Engine Oil Refilling and Level Check (Refer to P.12-4.)

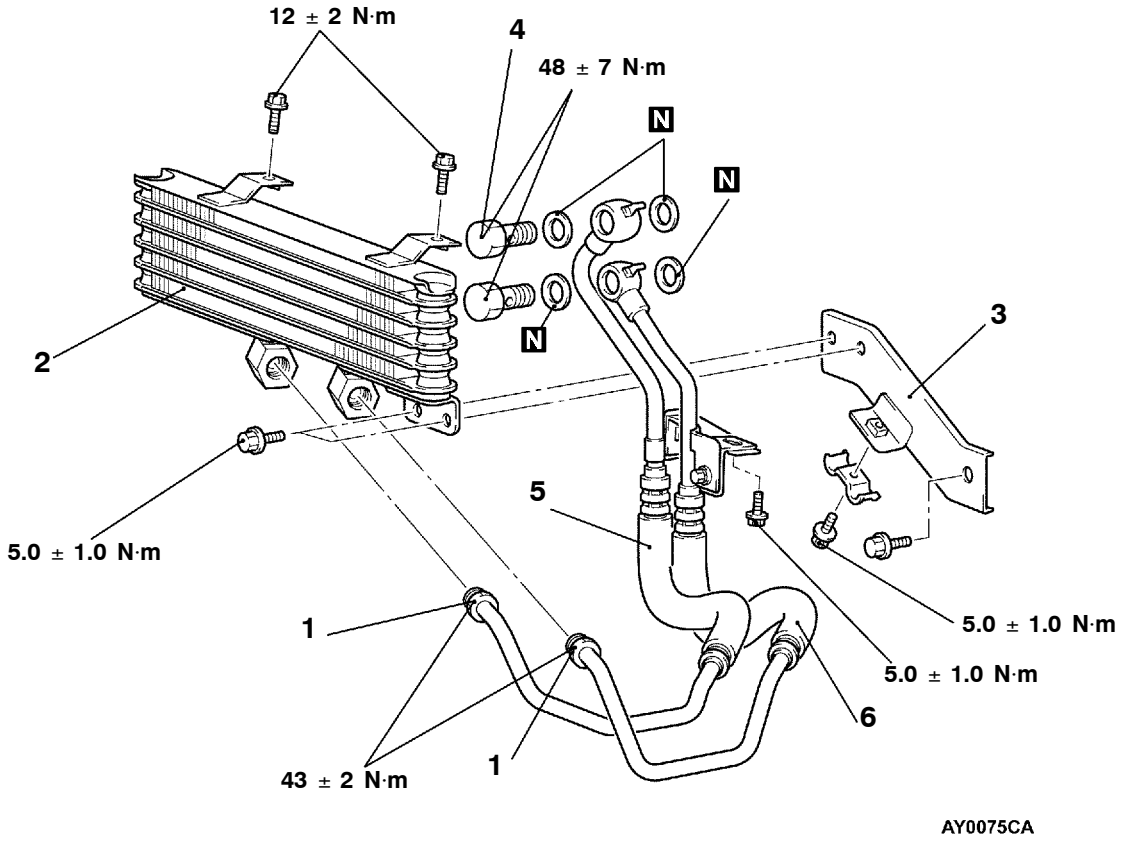


**Removal steps**

1. Oil cooler hose connection at cooler side
2. Oil cooler assembly
3. Bracket
4. Eye bolts
5. Oil cooler return hose
6. Oil cooler feed hose

Purchased from www.WorkshopManuals.co.uk

www.WorkshopManuals.co.uk

<4D5>

**Pre-removal Operation**
- Oil Reservoir Removal
- Air Cleaner Removal (Refer to GROUP 15 - Air Cleaner.)

**Post-installation Operation**
- Oil Reservoir Installation
- Air Cleaner Installation (Refer to GROUP 15 - Air Cleaner.)
- Engine Oil Refilling and Level Check (Refer to P.12-4.)

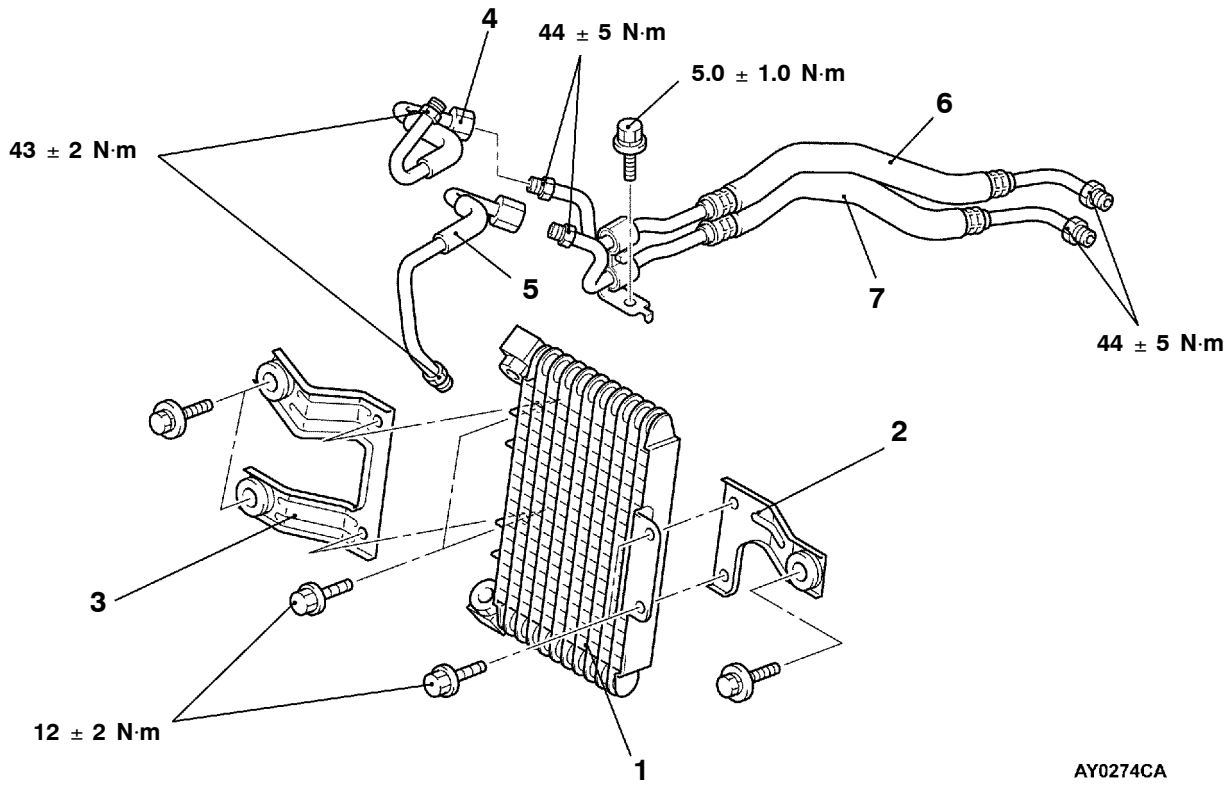


**Removal steps**

- Radiator grille (Refer to GROUP 51.)
1. Oil cooler assembly
2. Bracket
- Headlamp (Refer to GROUP 54A.)
3. Bracket
- Intercooler air pipe (Refer to GROUP 15.)
4. Oil cooler return tube
5. Oil cooler feed tube
6. Oil cooler return hose
7. Oil cooler feed hose

Purchased from www.WorkshopManuals.co.uk

www.WorkshopManuals.co.uk

<4M4>

**Pre-removal Operation**
- Coolant Draining (Refer to GROUP 14 - On-vehicle Service.)
- Turbocharger Removal (Refer to GROUP 33A.)

**Post-installation Operation**
- Turbocharger Installation (Refer to GROUP 15.)
- Coolant Refilling (Refer to GROUP 14 - On-vehicle Service.)
- Engine Oil Refilling and Level Check (Refer to P.12-4.)

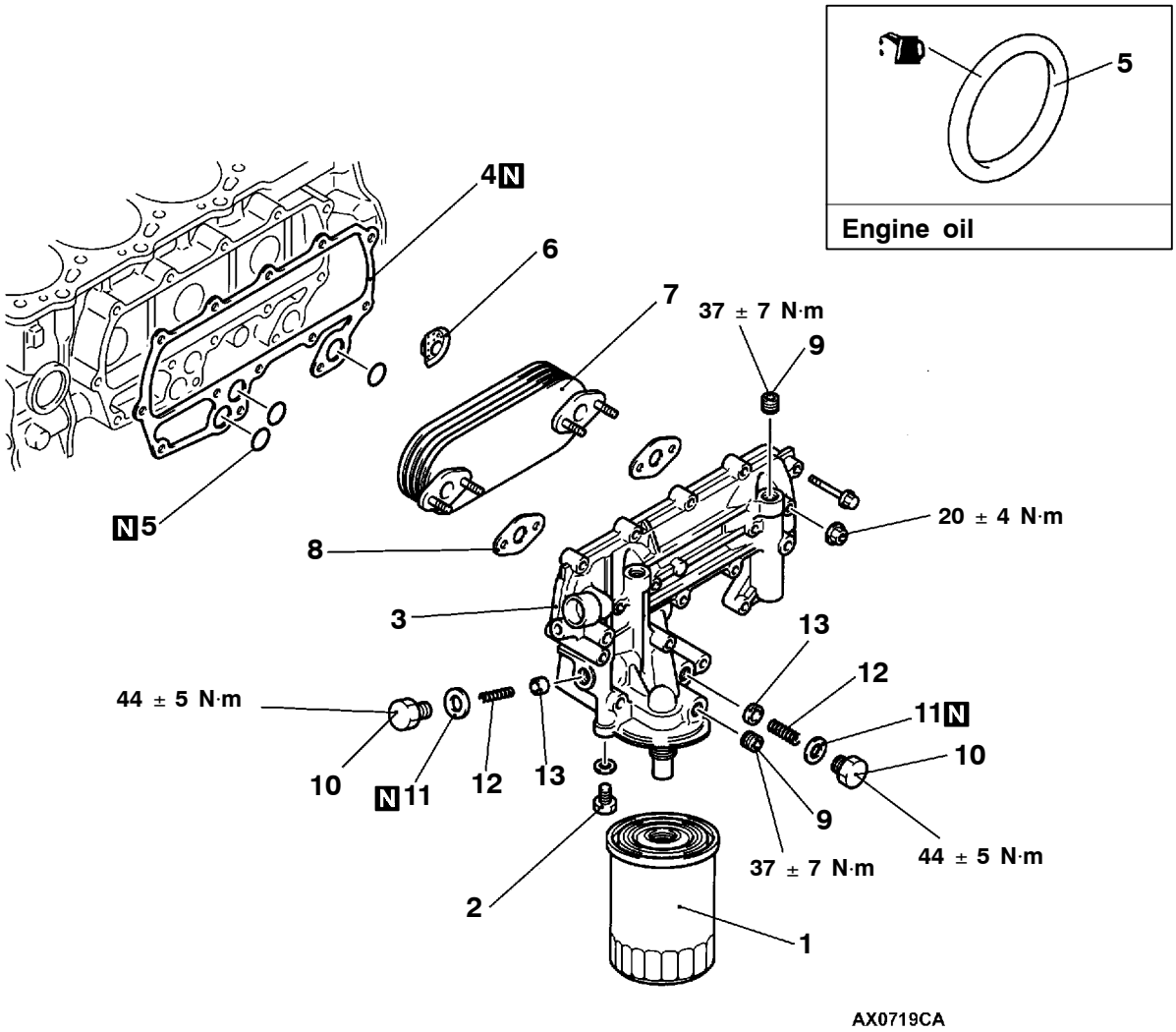


**Removal steps**

1. Oil filter (Refer to P.12-5.)
2. Water drain plug
3. ▶A◀ Oil cooler assembly
4. Gasket
5. O ring
6. Water separator
- Engine oil draining (Refer to P.12-4.)
7. Oil cooler element
8. Gasket
9. Plug
10. Plug
11. Gasket
12. Spring
13. Valve

Purchased from www.WorkshopManuals.co.uk

www.WorkshopManuals.co.uk

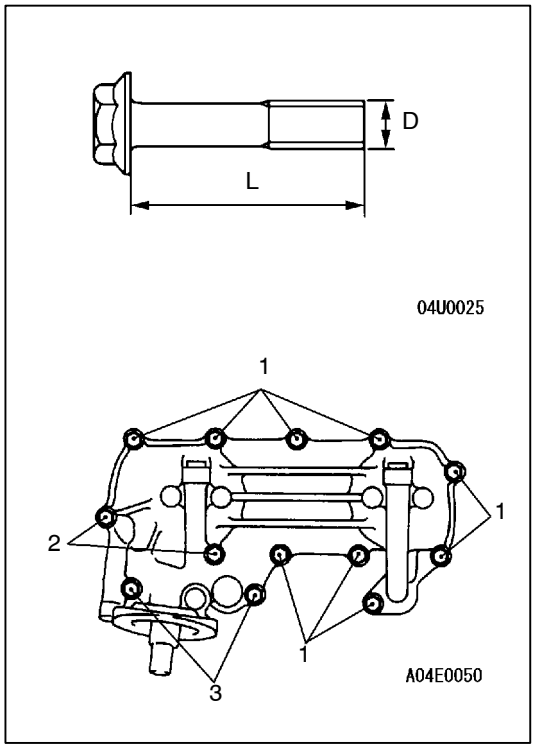


## INSTALLATION SERVICE POINT

### ▶A◀ OIL COOLER ASSEMBLY INSTALLATION

| Symbol | Head mark | D×L mm |
|---|---|---|
| 1 | 7T | 8×32 |
| 2 | | 8×75 |
| 3 | | 10×80 |

Purchased from www.WorkshopManuals.co.uk

www.WorkshopManuals.co.uk

# GROUP 12
# ENGINE LUBRICATION

## GENERAL

### OUTLINE OF CHANGE

- The engine oil quantity has been changed as variable geometry (VG) turbocharger has been used.

## LUBRICANT

| Items | | 4D5 |
|---|---|---|
| Engine oil quantity L | Oil filter | 0.8 |
| | Oil cooler | 0.4 |
| | Total | 7.5 |

Purchased from www.WorkshopManuals.co.uk

www.WorkshopManuals.co.uk

# GASOLINE DIRECT INJECTION (GDI)

**Click on the applicable bookmark to selected the required model year.**

Purchased from www.WorkshopManuals.co.uk

www.WorkshopManuals.co.uk

# GASOLINE DIRECT INJECTION (GDI)

## CONTENTS


**GENERAL INFORMATION . . . . . 3**

**SERVICE SPECIFICATIONS . . . . . 7**

**SEALANT . . . . . 7**

**SPECIAL TOOLS . . . . . 7**

**TROUBLESHOOTING <M/T> . . . . . 9**

**TROUBLESHOOTING <A/T> . . . . . 126**

**ON-VEHICLE SERVICE . . . . . 219**

- Fuel Pump Connector Disconnection (How to Reduce the Fuel Pressure) . . . . . 219
- Fuel Pump Operation (Low Pressure) Check . 220
- Throttle Body (Throttle Valve Area) Cleaning . 220
- Throttle Position Sensor Adjustment . . . . . 220
- Accelerator Pedal Position Sensor Adjustment . . . . . 221
- Fuel Pressure Test . . . . . 222
- Fuel Leak Check . . . . . 225
- Component Location . . . . . 226
- Engine Control Relay, Fuel Pump Relay, Injector Driver Control Relay and Throttle Valve Control Servo Relay Continuity Check . . . . . 227
- Intake Air Temperature Sensor Check . . . . . 227
- Engine Coolant Temperature Sensor Check . . 227
- Throttle Position Sensor Check . . . . . 228
- Accelerator Pedal Position Sensor Check . . . . 229
- Accelerator Pedal Position Switch Check . . . . . 230
- Oxygen Sensor Check . . . . . 230
- Injector Check . . . . . 232
- Throttle Valve Control Servo Check . . . . . 232
- Clutch Switch Check . . . . . 233
- Purge Control Solenoid Valve Check . . . . . 233
- EGR Valve Check . . . . . 233

**INJECTOR . . . . . 234**

**FUEL PUMP (HIGH PRESSURE) . . . . . 239**

**THROTTLE BODY . . . . . 242**

**INJECTOR DRIVER . . . . . 245**

**ENGINE-ECU, ENGINE-A/T-ECU <A/T>, THROTTLE VALVE CONTROLLER . . . . . 246**


Purchased from www.WorkshopManuals.co.uk

www.WorkshopManuals.co.uk

# GENERAL INFORMATION

The Gasoline Direct Injection System consists of sensors which detect the engine conditions, the engine-ECU <M/T> or engine-A/T-ECU <A/T> which controls the system based on signals from these sensors, and actuators which operate under the control of the engine-ECU <M/T> or engine-A/T-ECU <A/T>.

The engine-ECU <M/T> or engine-A/T-ECU <A/T> carries out activities such as fuel injection control, idle speed control and ignition timing control. In addition, the engine-ECU <M/T> or engine-A/T-ECU <A/T> is equipped with several diagnosis modes which simplify troubleshooting when a problem develops.

## FUEL INJECTION CONTROL

The injector drive times and injector timing are controlled so that the optimum air/fuel mixture is supplied to the engine to correspond to the continually-changing engine operation conditions.

A single injector for each cylinder is mounted at the cylinder head. The fuel is sent under pressure from the fuel tank to the fuel pressure regulator (low pressure) by the fuel pump (low pressure). The pressure is regulated by the fuel pressure regulator (low pressure) and the fuel regulated is then sent to the fuel pump (high pressure). The fuel under increased pressure generated by the fuel pump (high pressure) is then regulated by the fuel pressure regulator (high pressure) and is then distributed to each of the injectors via the delivery pipes.

Fuel injection is normally carried out once for each cylinder for every two rotations of the crankshaft. The firing order is 1-2-3-4-5-6. This is called sequential fuel injection.

When the engine is cold or under a severe load, the “open-loop” control keeps the air/fuel ratio at a richer than usual level to maintain driveability. When the engine is under low or medium loads, the air/fuel ratio becomes leaner to reduce fuel consumption. When the engine is running at medium or high loads after having warmed up, the “closed-loop” control uses the signal from the oxygen sensor to keep the air/fuel ratio at the optimum theoretical level.

## THROTTLE VALVE OPENING ANGLE CONTROL

This system controls throttle valve opening angle electronically. The engine-ECU <M/T> or engine-A/T-ECU <A/T> determines how deeply the accelerator pedal is depressed by means of the accelerator position sensor (APS). Then the engine-ECU <M/T> or engine-A/T-ECU <A/T> sends a target value of the throttle valve opening angle to the throttle valve controller. The throttle valve control servo operates the throttle valve so that it reaches the target opening angle.

## IDLE SPEED CONTROL

This system maintains engine idle speed at a predetermined condition by controlling the air flow that passes through the throttle valve according to engine idling condition and engine loads at idling.

The engine-ECU <M/T> or engine-A/T-ECU <A/T> operates the throttle valve control servo so that engine speed is maintained within a map value. The map value is predetermined according to engine coolant temperature and air-conditioning load.

## IGNITION TIMING CONTROL

The power transistor located in the ignition primary circuit turns ON and OFF to control the primary current flow to the ignition coil. This controls the ignition timing in order to provide the optimum ignition timing with respect to the engine operating conditions. The ignition timing is determined by the engine-ECU <M/T> or engine-A/T-ECU <A/T> from the engine speed, intake air volume, engine coolant temperature, atmospheric pressure and injection timing (intake stroke or compression stroke).

Purchased from www.WorkshopManuals.co.uk

www.WorkshopManuals.co.uk

### SELF-DIAGNOSIS FUNCTION

- When an abnormality is detected in one of the sensors or actuators related to emission control, the engine warning lamp (check engine lamp) illuminates or flashes as a warning to the driver.
- When an abnormality is detected in one of the sensors or actuators, a diagnosis code corresponding to the abnormality is output.
- The engine-ECU records the engine operating condition when the diagnosis code is set. This data is called "freeze frame" data.
  This data can be read by using the MUT-II, and can then be used in simulation tests for troubleshooting. <Only vehicles with M/T>
- The RAM data inside the engine-ECU <M/T> or engine-A/T-ECU <A/T> that is related to the sensors and actuators can be read by means of the MUT-II. In addition, the actuators can be force-driven under certain circumstances.

### OTHER CONTROL FUNCTIONS

1. Fuel Pump Control
   Turns the fuel pump relay ON so that current is supplied to the fuel pump while the engine is cranking or running.
2. A/C Relay Control
   Turns the compressor clutch of the A/C ON and OFF.
3. Purge Control Solenoid Valve Control
   Refer to GROUP 17.
4. EGR Control Servo Control
   Refer to GROUP 17.

## GENERAL SPECIFICATIONS

| Items | | Specifications |
|---|---|---|
| Throttle body | Throttle bore mm | 65 |
| | Throttle position sensor | Variable resistor type |
| | Throttle valve control servo | Brushless DC-motor type |
| Engine-ECU <M/T> | Identification model No. | E2T79271 <RHD><br>E2T79272 <LHD> |
| Engine-A/T-ECU <A/T> | Identification model No. | E2T76277 <RHD><br>E2T76278 <LHD> |

Purchased from www.WorkshopManuals.co.uk

www.WorkshopManuals.co.uk

| Items | | Specifications |
|---|---|---|
| Sensors | Air flow sensor | Karman vortex type |
| | Barometric pressure sensor | Semiconductor type |
| | Intake air temperature sensor | Thermistor type |
| | Engine coolant temperature sensor | Thermistor type |
| | Oxygen sensor | Zirconia type |
| | Accelerator pedal position sensor (1st and 2nd channels) | Variable resistor type |
| | Accelerator pedal position switch | Rotary contact type, within accelerator pedal position sensor (1st channel) |
| | Vehicle speed sensor | Magnetic resistive element type |
| | Inhibitor switch | Contact switch type |
| | Camshaft position sensor | Hall element type |
| | Crank angle sensor | Hall element type |
| | Detonation sensor | Piezoelectric type |
| | Fuel pressure sensor | Metallic membrane type |
| | Power steering fluid pressure switch | Contact switch type |
| Actuators | Engine control relay type | Contact switch type |
| | Fuel pump relay type | Contact switch type |
| | Injector driver control relay | Contact switch type |
| | Injector type and number | Electromagnetic type, 6 |
| | Injector identification mark | DIM 1070 |
| | Throttle valve control servo relay | Contact switch type |
| | Throttle valve control servo | Brushless DC-motor type |
| | EGR valve | Stepper motor type |
| | Purge control solenoid valve | Duty cycle type solenoid valve |
| Fuel pressure regulator (low pressure) | Regulator pressure kPa | 329 |
| Fuel pressure regulator (high pressure) | Regulator pressure MPa | 5.0 |

Purchased from www.WorkshopManuals.co.uk

www.WorkshopManuals.co.uk

## GASOLINE DIRECT INJECTION SYSTEM DIAGRAM

| | | | | |
|---|---|---|---|---|
| ★1 Oxygen sensor (front)<br>★2 Oxygen sensor (rear) <M/T><br>★3 Air flow sensor<br>★4 Intake air temperature sensor<br>★5 Throttle position sensor (2nd channel)<br>★6 Camshaft position sensor<br>★7 Crank angle sensor<br>★8 Barometric pressure sensor<br>★9 Engine coolant temperature sensor<br>★10 Fuel pressure sensor | • Power supply<br>• Ignition switch-IG<br>• Ignition switch-ST<br>• Accelerator pedal position sensor (1st channel)<br>• Accelerator pedal position switch<br>• Detonation sensor<br>• Vehicle speed sensor<br>• A/C switch 1<br>• A/C switch 2<br>• Inhibitor switch<br>• Power steering fluid pressure switch<br>• Alternator FR terminal<br>• Stop lamp switch<br>• Clutch switch <M/T><br>• Small lamp switch<br>• Injector wire open circuit check signal<br>• Throttle valve controller | ⇨ Engine-ECU <M/T> or engine-A/T-ECU <A/T> ⇨ | ◆1 Injector driver (injector)<br>◆2 EGR valve (stepper motor)<br>◆3 Purge control solenoid valve | • Engine control relay<br>• Fuel pump relay<br>• Injector driver relay<br>• Throttle control servo relay<br>• A/C relay<br>• Condenser fan relay<br>• Ignition coil<br>• Engine warning lamp<br>• GDI ECO indicator lamp<br>• Diagnosis output<br>• Alternator G terminal<br>• Throttle valve controller<br>• Oxygen sensor heater |
| ★11 Throttle position sensor (1st channel) | • Power supply<br>• Ignition switch-IG<br>• Accelerator pedal position sensor (2nd channel)<br>• Engine-ECU <M/T> or engine-A/T-ECU <A/T> | ⇨ Throttle valve controller ⇨ | ◆4 Throttle valve control servo | • Engine-ECU <M/T> or engine-A/T-ECU <A/T> |

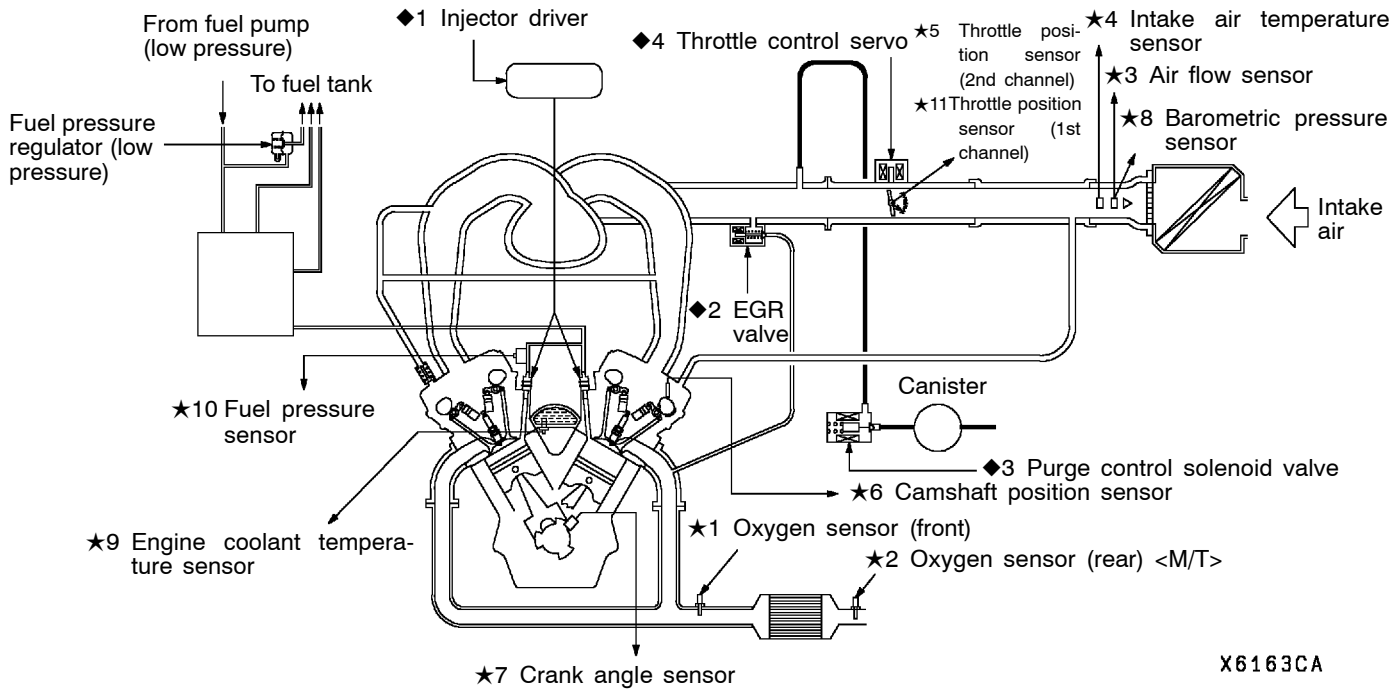


Purchased from www.WorkshopManuals.co.uk

www.WorkshopManuals.co.uk

## SERVICE SPECIFICATIONS

| Item | | Standard value |
|---|---|---|
| Adjustment voltage of throttle position sensor (1st channel) V | | 0.4 - 0.6 |
| Adjustment voltage of throttle position sensor (2nd channel) V | | 4.2 - 4.8 |
| Throttle position sensor resistance kΩ | | 0.9 - 2.5 |
| Adjustment voltage of accelerator pedal position sensors 1 and 2 V | | 0.985 - 1.085 |
| Resistance of accelerator pedal position sensors 1 and 2 kΩ | | 3.5 - 6.5 |
| Intake air temperature sensor resistance kΩ | at 20°C | 2.3 - 3.0 |
| | at 80°C | 0.30 - 0.42 |
| Engine coolant temperature sensor resistance kΩ | at 20°C | 2.1 - 2.7 |
| | at 80°C | 0.26 - 0.36 |
| Fuel pressure | High-pressure side MPa | 4 - 6.9 |
| | Low-pressure side kPa | Approximately 329 |
| Injector coil resistance (at 20°C) Ω | | 0.9 - 1.1 |
| Oxygen sensor output voltage V (during revving) | | 0.6 - 1.0 |
| Oxygen sensor heater resistance (at 20°C) Ω | | 4.5 - 8.0 |
| Throttle control servo coil resistance (at 20°C) Ω | | 0.6 - 1.0 |

## SEALANT

| Item | Specified sealant | Remark |
|---|---|---|
| Engine coolant temperature sensor | 3M Nut Locking Part No.4171 or equivalent | Drying sealant |

## SPECIAL TOOLS

| Tools | Number | Name | Use |
|---|---|---|---|
| 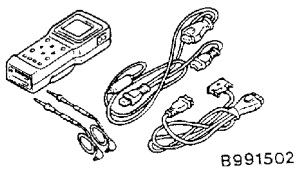  | MB991502 | MUT-II sub assembly | • GDI system check<br>• Take a reading of the diagnosis codes |

Purchased from www.WorkshopManuals.co.uk

www.WorkshopManuals.co.uk

| Tools | Number | Name | Use |
|---|---|---|---|
| 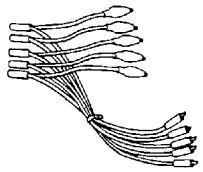 | MB991348, MB991658 | Test harness set | ● Troubleshooting - voltage measurement<br>● Inspection using an analyzer |
| 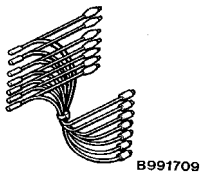 B991709 | MB991709 | | |
| 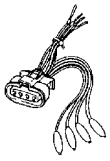 | MB991519 | Alternator harness connector | Troubleshooting - voltage measurement |
| 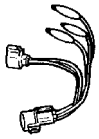 | MD998478 | Test harness (3-pin, square) | ● Troubleshooting - voltage measurement<br>● Inspection using an analyzer |
| 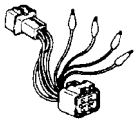 | MD998464 | Test harness (4-pin, square) | Oxygen sensor check |
| 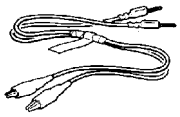 | MB991529 | Diagnosis code checking harness | Take a reading of the diagnosis codes <A/T> |
| 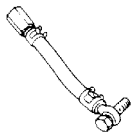 | MD998709 | Adaptor hose | Fuel pressure measurement |
| 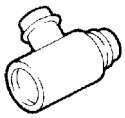 | MD998742 | Hose adaptor | |
| 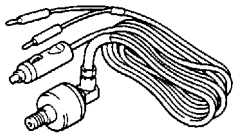 B991637 | MB991637 | Fuel pressure gauge set | |

Purchased from www.WorkshopManuals.co.uk

www.WorkshopManuals.co.uk

# TROUBLESHOOTING <M/T>

## STANDARD FLOW OF DIAGNOSTIC TROUBLESHOOTING

Refer to GROUP 00 - How to Use Troubleshooting/Inspection Service Points.

NOTE
When replacing the engine-ECU, replace immobilizer-ECU and ignition key as well at the same time.

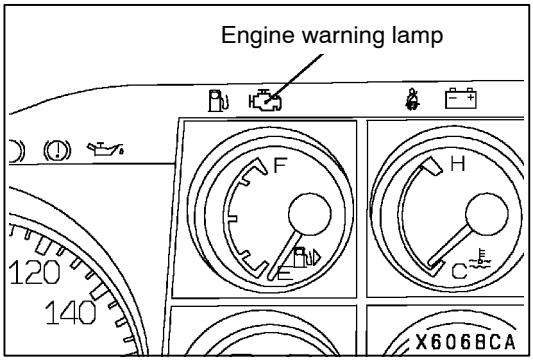


## DIAGNOSIS FUNCTION

### ENGINE WARNING LAMP (CHECK ENGINE LAMP)

If an abnormality occurs in any of the following items related to the GDI system, the engine warning lamp will illuminate or flash.
If the lamp remains illuminated or if the lamp illuminates while the engine is running, check the diagnosis code output.

**Engine warning lamp inspection items**

| Code No. | Diagnosis item |
|---|---|
| - | Engine-ECU |
| P0100 | Air flow sensor system |
| P0105 | Barometric pressure sensor system |
| P0110 | Intake air temperature sensor system |
| P0115 | Engine coolant temperature sensor system |
| P0120★ | Throttle position sensor (1st channel) system |
| P0125 | Feedback system |
| P0130 | Oxygen sensor (front) system <sensor 1> |
| P0135 | Oxygen sensor heater (front) system <sensor 1> |
| P0136 | Oxygen sensor (rear) system <sensor 2> |
| P0141 | Oxygen sensor heater (rear) system <sensor 2> |
| P0170 | Abnormal fuel system |
| P0190★ | Abnormal fuel pressure |
| P0201 | No.1 injector system |
| P0202 | No.2 injector system |
| P0203 | No.3 injector system |
| P0204 | No.4 injector system |
| P0205 | No.5 injector system |

Purchased from www.WorkshopManuals.co.uk

www.WorkshopManuals.co.uk

| Code No. | Diagnosis item |
|---|---|
| P0206 | No.6 injector system |
| P0220★ | Accelerator pedal position sensor (1st channel) system |
| P0225★ | Throttle position sensor (2nd channel) system |
| P0300★ | Ignition coil (power transistor) system |
| P0301 | No.1 cylinder misfire detected. |
| P0302 | No.2 cylinder misfire detected. |
| P0303 | No.3 cylinder misfire detected. |
| P0304 | No.4 cylinder misfire detected. |
| P0305 | No.5 cylinder misfire detected. |
| P0306 | No.6 cylinder misfire detected. |
| P0335 | Crank angle sensor system |
| P0340 | Camshaft position sensor system |
| P0403 | EGR valve system |
| P0420 | Catalyst malfunction |
| P0443 | Purge control solenoid valve system |
| P1200 | Injector driver system |
| P1220★ | Electronic-controlled throttle valve system |
| P1221★ | Throttle valve position feedback system |
| P1222★ | Throttle control servo system |
| P1223★ | Communication line system with throttle valve controller |
| P1225★ | Accelerator pedal position sensor (2nd channel) system |
| P1226★ | Throttle valve controller system |

NOTE

1. If the engine warning lamp illuminates because of a malfunction of the engine-ECU, communication between MUT-II and the engine-ECU is impossible. In this case, the diagnosis code cannot be read.
2. After the engine-ECU has detected a malfunction, the engine warning lamp illuminates when the engine is next turned on and the same malfunction is re-detected. However, for items marked with a "★" in the diagnosis code number column, the engine warning lamp illuminates only on the first detection of the malfunction.
   If diagnosis code P0120, P0220, P0225 or P1225 is set, the engine warning lamp will flash. If the 1st and 2nd channels of the throttle postion sensor or the acccelerator pedal position sensor fail at the same time, the engine warning lamp will also flash.
3. After the engine warning lamp illuminates, it will be switched off under the following conditions.
   (1) When the engine-ECU monitored the power train malfunction three times* and met set condition requirements, it detected no malfunction.
   *: In this case, "one time" indicates from engine start to stop.
   (2) For misfiring malfunction, when driving conditions (engine speed, engine coolant temperature, etc.) are similar to those when the malfunction was first recorded.

Purchased from www.WorkshopManuals.co.uk

www.WorkshopManuals.co.uk

4. Sensor 1 indicates the sensor mounted at a position closest to the engine, and sensor 2 indicates the sensor mounted at the position second closest to the engine.

**METHOD OF READING AND ERASING DIAGNOSIS CODES**

Refer to GROUP 00 - How to Use Troubleshooting/Inspection Service Points.

**DIAGNOSIS USING DIAGNOSIS 2 MODE**

1. Switch the diagnosis mode of the engine control unit to DIAGNOSIS 2 mode using the MUT-II.
2. Carry out a road test.
3. Take a reading of the diagnosis code and repair the problem location.
4. Turn the ignition switch to OFF and then back to ON again.

NOTE
By turning the ignition switch to OFF, the ENGINE-ECU will switch the diagnosis mode from DIAGNOSIS 2 mode to DIAGNOSIS 1 mode.

5. Erase the diagnosis codes.

**INSPECTION USING MUT-II DATA LIST AND ACTUATOR TESTING**

1. Carry out inspection by means of the data list and the actuator test function. If there is an abnormality, check and repair the chassis harnesses and components.
2. After repairing, re-check using the MUT-II and check that the abnormal input and output have returned to normal as a result of the repairs.
3. Erase the diagnosis code memory.
4. Remove the MUT-II, and then start the engine again and carry out a road test to confirm that the problem has disappeared.

Purchased from www.WorkshopManuals.co.uk

www.WorkshopManuals.co.uk

## FREEZE FRAME DATA

When the engine-ECU detects a malfunction and stores a diagnosis code, it also stores a current status of the engine. This function is called "Freeze frame data." By analyzing this "freeze frame" data with the MUT-II, an effective troubleshooting can be performed.

| Data item | | Unit |
|---|---|---|
| Engine coolant temperature sensor | | °C |
| Engine speed | | r/min |
| Vehicle speed | | km/h |
| Long-term fuel compensation (long-term fuel trim) | | % |
| Short-term fuel compensation (short-term fuel trim) | | % |
| Fuel control condition | Open loop | OL |
| | Closed loop | CL |
| | Open loop owing to drive condition | OL-DRV. |
| | Open loop owing to system malfunction | OL-SYS. |
| | Closed loop based on one oxygen sensor | CL-H02S |
| Calculation load value | | % |
| Diagnosis code during data recording | | - |

NOTE
If malfunctions have been detected in multiple systems, store one malfunction only, which has been detected first.

## READINESS TEST STATUS

The engine-ECU monitors the following main diagnosis items, judges if these items are in good condition or not, and the stores its history. This history can be read out by using MUT-II. (If the ECU has judged a item before, the MUT-II displays "Complete.")
In addition, if diagnosis codes are erased or the battery cable is disconnected, this history will also be erased (the memory will be reset).

- Catalyst: P0420
- Oxygen sensor: P0130
- Oxygen sensor heater: P0135, P0141

Purchased from www.WorkshopManuals.co.uk

www.WorkshopManuals.co.uk

## FAIL-SAFE FUNCTION REFERENCE TABLE

When the main sensor malfunctions are detected by the diagnosis function, the vehicle is controlled by means of the pre-set control logic to maintain safe conditions for driving.

| Malfunctioning item | Control contents during malfunction |
|---|---|
| Air flow sensor | 1. Suspends lean burn operation.<br>2. Uses the throttle position sensor signal and engine speed signal (crank angle sensor signal) to take reading of the basic injector drive time and basic ignition timing from the pre-set mapping. |
| Intake air temperature sensor | Controls as if the intake air temperature is 25°C. |
| Throttle position sensor (2nd channel) | 1. Suspends lean burn operation.<br>2. Controls the throttle opening angle feedback (half as much as the opening rate in the normal condition) by using signals from the throttle position sensor (1st channel). However, this controlling system is not applied if the throttle position sensor (1st channel) and throttle position sensor (2nd channel) combination output voltage is outside 4 - 6 V.<br>3. Refrains from controlling the throttle opening angle feedback if the throttle position sensor (1st channel) is also defective. |
| Engine coolant temperature sensor | Controls as if the engine coolant temperature is 80°C. (Moreover, the control system is working until the ignition switch is turned OFF if the sensor signal returns to normal.) |
| Camshaft position sensor | Cuts the fuel supply once a malfunction is detected. (Only when there has been no occasion of detecting No.1 cylinder top dead centre after the ignition switch is turned ON.) |
| Vehicle speed sensor | 1. Suspends lean burn operation. However, the control is cancelled as a certain time passes by with the engine speed of 1,500 r/min or more.<br>2. Suspends lean burn operation during the engine idling. |
| Barometric pressure sensor | Controls as if the barometric pressure is 101 kPa. |
| Detonation sensor | Fixes the ignition timing as that for standard petrol. |
| Injector | 1. Suspends lean burn operation.<br>2. Suspends the exhaust gas recirculation. |
| Ignition coil (incorporating power transistor) | 1. Suspends lean burn operation.<br>2. Cuts off the fuel supply to cylinders with an abnormal ignition signal. |
| Fuel pressure sensor | 1. Controls as if the fuel pressure is 5MPa.<br>2. Suspends fuel injection. (when the low pressure is detected and the engine speed is more than 3,000r/min) |
| Alternator FR terminal | Refrains from controlling to suppress the alternator output to electrical load. (Operated as a normal alternator) |
| Accelerator pedal position sensor (2nd channel) | 1. Suspends lean burn operation.<br>2. Controls the throttle valve position by using signals from the accelerator pedal position sensor (1st channel). (However, the control system is not applicable if the difference from the accelerator pedal position sensor (1st channel) output voltage is 1.0 V or higher.)<br>3. Suspends the electronic controlled throttle valve system if accelerator pedal position sensor (1st channel) is also defective. |

Purchased from www.WorkshopManuals.co.uk

www.WorkshopManuals.co.uk

| Malfunctioning item | Control contents during malfunction |
|---|---|
| Accelerator pedal position sensor (1st channel) | 1. Suspends lean burn operation.<br>2. Controls the throttle valve position by using signals from the accelerator pedal position sensor (2nd channel). (However, this control is not applicable if the voltage difference between the accelerator pedal position sensor (1st channel) and accelerator pedal position sensor (2nd channel) is 1.0 V or higher.)<br>3. Also suspends the electronic-controlled throttle valve system when the accelerator pedal position sensor (2nd channel) is defective. |
| Throttle position sensor (1st channel) | 1. Suspends lean burn operation.<br>2. Controls throttle opening angle feedback by using signals from throttle position sensor (2nd channel). (However, the controlling system is not applied when the throttle position sensor (1st channel) and throttle position sensor (2nd channel) combination output voltage is outside 4 - 6 V.)<br>3. Refrains from controlling the throttle opening angle feedback when throttle position sensor (2nd channel) is also defective. |
| Electronic-controlled throttle valve system | 1. Suspends the electronic controlled throttle valve system.<br>2. Suspends lean burn operation.<br>3. Suspends the idle speed feedback control. |
| Throttle valve position feedback | 1. Suspends the electronic controlled throttle valve system.<br>2. Suspends lean burn operation.<br>3. Suspends the engine speed feedback control.<br>However, if the throttle valve opening angle is significantly wide, this system carries out the following controls.<br>1. Always cuts the fuel supply to three cylinders.<br>2. Cuts the fuel supply when the engine speed reaches 3,000 r/min or more. |
| Throttle control servo | 1. Suspends the electronic-controlled throttle valve system.<br>2. Suspends lean burn operation.<br>3. Suspends the engine speed feedback control. |
| Communication line between the throttle valve controller and the ECU | 1. Communication error between the throttle valve controller and the engine-ECU:<br>● Suspends lean burn operation.<br>● Cuts the fuel supply when the engine speed reaches 3,000 r/min or more.<br>● Suspends the cruise-control.<br>2. Communication error between the throttle valve controller and the engine-ECU:<br>● Suspends lean burn operation.<br>● Cuts the fuel supply when the engine speed reaches 3,000 r/min or more.<br>● Suspends the cruise-control.<br>● The throttle valve controller controls the throttle valve opening angle by using signals from accelerator pedal position sensor (2nd channel). |
| Throttle valve controller | 1. Suspends the electronic-controlled throttle valve system.<br>2. Suspends lean burn operation.<br>3. Suspends the engine speed feedback control. |

NOTE
If the electronic-controlled throttle valve system is suspended, the engine warning lamp will illuminate.

Purchased from www.WorkshopManuals.co.uk

www.WorkshopManuals.co.uk

## INSPECTION CHART FOR DIAGNOSIS CODES

| Code No. | Diagnosis item | Reference page |
|---|---|---|
| P0100 | Air flow sensor system | 13A-17 |
| P0105 | Barometric pressure sensor system | 13A-19 |
| P0110 | Intake air temperature sensor system | 13A-21 |
| P0115 | Engine coolant temperature sensor system | 13A-22 |
| P0120★ | Throttle position sensor (1st channel) system | 13A-25 |
| P0125 | Feedback system | 13A-27 |
| P0130 | Oxygen sensor (front) system <sensor 1> | 13A-28 |
| P0135 | Oxygen sensor heater (front) system <sensor 1> | 13A-30 |
| P0136 | Oxygen sensor (rear) system <sensor 2> | 13A-31 |
| P0141 | Oxygen sensor heater (rear) system <sensor 2> | 13A-33 |
| P0170 | Abnormal fuel system | 13A-34 |
| P0190★ | Abnormal fuel pressure | 13A-36 |
| P0201 | No.1 injector system | 13A-38 |
| P0202 | No.2 injector system | 13A-40 |
| P0203 | No.3 injector system | 13A-42 |
| P0204 | No.4 injector system | 13A-44 |
| P0205 | No.5 injector system | 13A-46 |
| P0206 | No.6 injector system | 13A-48 |
| P0220★ | Accelerator pedal position sensor (1st channel) system | 13A-50 |
| P0225★ | Throttle position sensor (2nd channel) system | 13A-52 |
| P0300★ | Ignition coil (power transistor) system | 13A-53 |
| P0301 | No.1 cylinder misfire detected. | 13A-55 |
| P0302 | No.2 cylinder misfire detected. | 13A-55 |
| P0303 | No.3 cylinder misfire detected. | 13A-55 |
| P0304 | No.4 cylinder misfire detected. | 13A-55 |
| P0305 | No.5 cylinder misfire detected. | 13A-55 |
| P0306 | No.6 cylinder misfire detected. | 13A-55 |
| P0325 | Detonation sensor system | 13A-56 |
| P0335 | Crank angle sensor system | 13A-56 |
| P0340 | Camshaft position sensor system | 13A-58 |
| P0403 | EGR valve system | 13A-60 |
| P0420 | Catalyst malfunction | 13A-61 |

Purchased from www.WorkshopManuals.co.uk

www.WorkshopManuals.co.uk

| Code No. | Diagnosis item | Reference page |
|---|---|---|
| P0443 | Purge control solenoid valve system | 13A-62 |
| P0500 | Vehicle speed sensor system | 13A-63 |
| P1200 | Injector driver system | 13A-63 |
| P1220★ | Electronic-controlled throttle valve system | 13A-64 |
| P1221★ | Throttle valve position feedback system | 13A-65 |
| P1222★ | Throttle control servo system | 13A-66 |
| P1223★ | Communication line with throttle valve controller | 13A-67 |
| P1225★ | Accelerator pedal position sensor (2nd channel) system | 13A-68 |
| P1226★ | Throttle valve controller system | 13A-69 |
| P1500 | Alternator FR terminal system | 13A-70 |
| P1610 | Immobilizer system | 13A-71 |

NOTE
1. Do not replace the engine-ECU until a through terminal check reveals there are no short/open circuit.
2. Check that the engine-ECU earth circuit is normal before checking for the cause of the problem.
3. After the engine-ECU has detected a malfunction, a diagnosis code is recorded the next time the engine is started and the same malfunction is re-detected. However, for items marked with a “★”, the diagnosis code is recorded on the first detection of the malfunction.
4. Sensor 1 indicates the sensor mounted at a position closest to the engine, and sensor 2 indicates the sensor mounted at the position second closest to the engine.

Purchased from www.WorkshopManuals.co.uk

www.WorkshopManuals.co.uk

## INSPECTION PROCEDURE CLASSIFIED BY DIAGNOSIS CODE

| Code No.P0100 Air flow sensor system | Probable cause |
|---|---|
| Range of Check<br>● Engine speed: 500 r/min or more<br>Set Conditions<br>● The sensor output frequency is 3.3 Hz or less for four seconds. | ● Malfunction of air flow sensor<br>● Open or short circuit in air flow sensor circuit or loose connector contact<br>● Malfunction of engine-ECU |

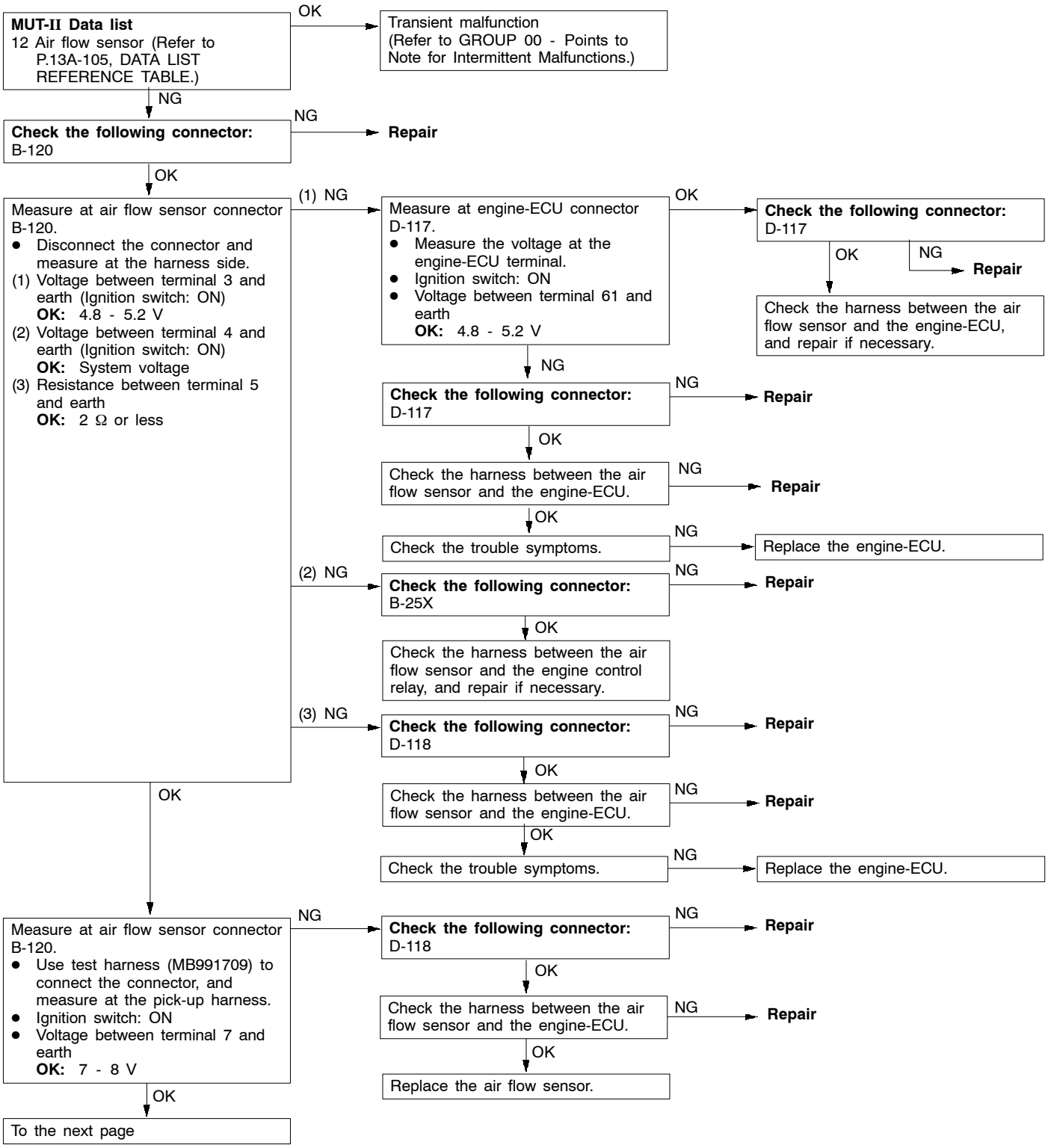


Purchased from www.WorkshopManuals.co.uk

www.WorkshopManuals.co.uk

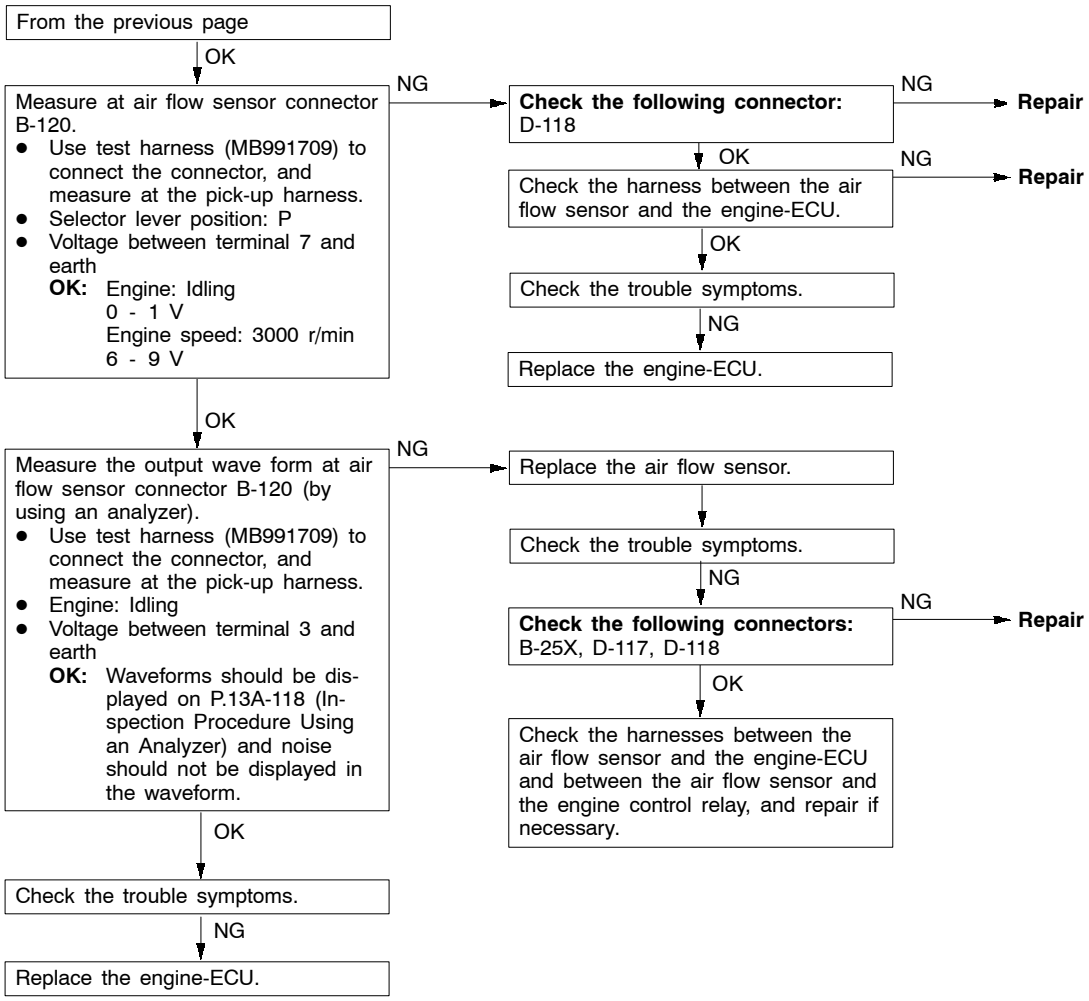


Purchased from www.WorkshopManuals.co.uk

www.WorkshopManuals.co.uk

| Code No.P0105 Barometric pressure sensor system | Probable cause |
|---|---|
| Range of Check<br>● Two seconds have passed since the ignition switch is turned ON or the engine starting process is completed.<br>● Battery voltage: 8 V or more<br>Set Conditions<br>● The sensor output voltage is 4.5 V or more for four seconds (equivalent to 114 kPa of barometric pressure)<br>or<br>● The sensor output voltage is 0.2 V or less (equivalent to 53 kPa of barometric pressure) | ● Malfunction of barometric pressure sensor<br>● Open or short circuit in barometric pressure sensor circuit or loose connector contact<br>● Malfunction of engine-ECU |

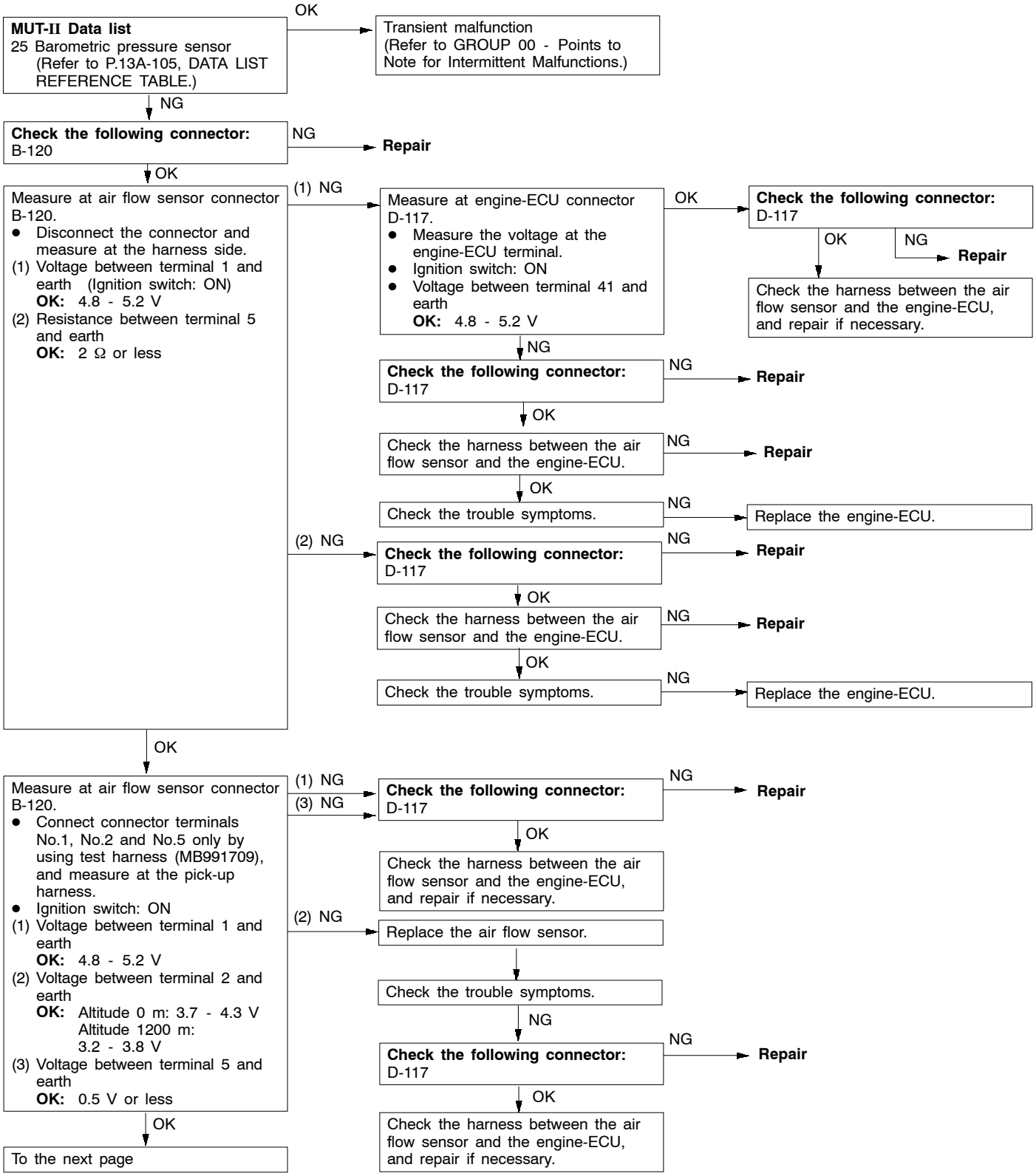


Purchased from www.WorkshopManuals.co.uk

www.WorkshopManuals.co.uk

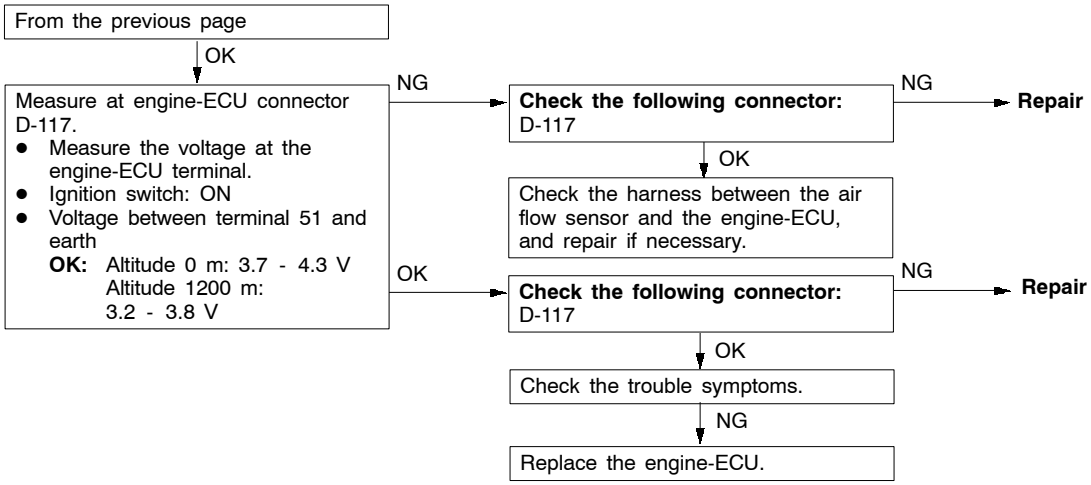


Purchased from www.WorkshopManuals.co.uk

www.WorkshopManuals.co.uk

| Code No.P0110 Intake air temperature sensor system | Probable cause |
|---|---|
| Range of Check<br>● Two seconds have passed since the ignition switch is turned ON or the engine starting process is completed.<br>Set Conditions<br>● The sensor output voltage is 4.6 V or more for four seconds (equivalent to -45°C of intake air temperature)<br>or<br>● The sensor output voltage is 0.2 V or more for four seconds (equivalent to 125°C of intake air temperature) | ● Malfunction of intake air temperature sensor<br>● Open or short circuit in intake air temperature sensor or loose connector contact<br>● Malfunction of engine-ECU |

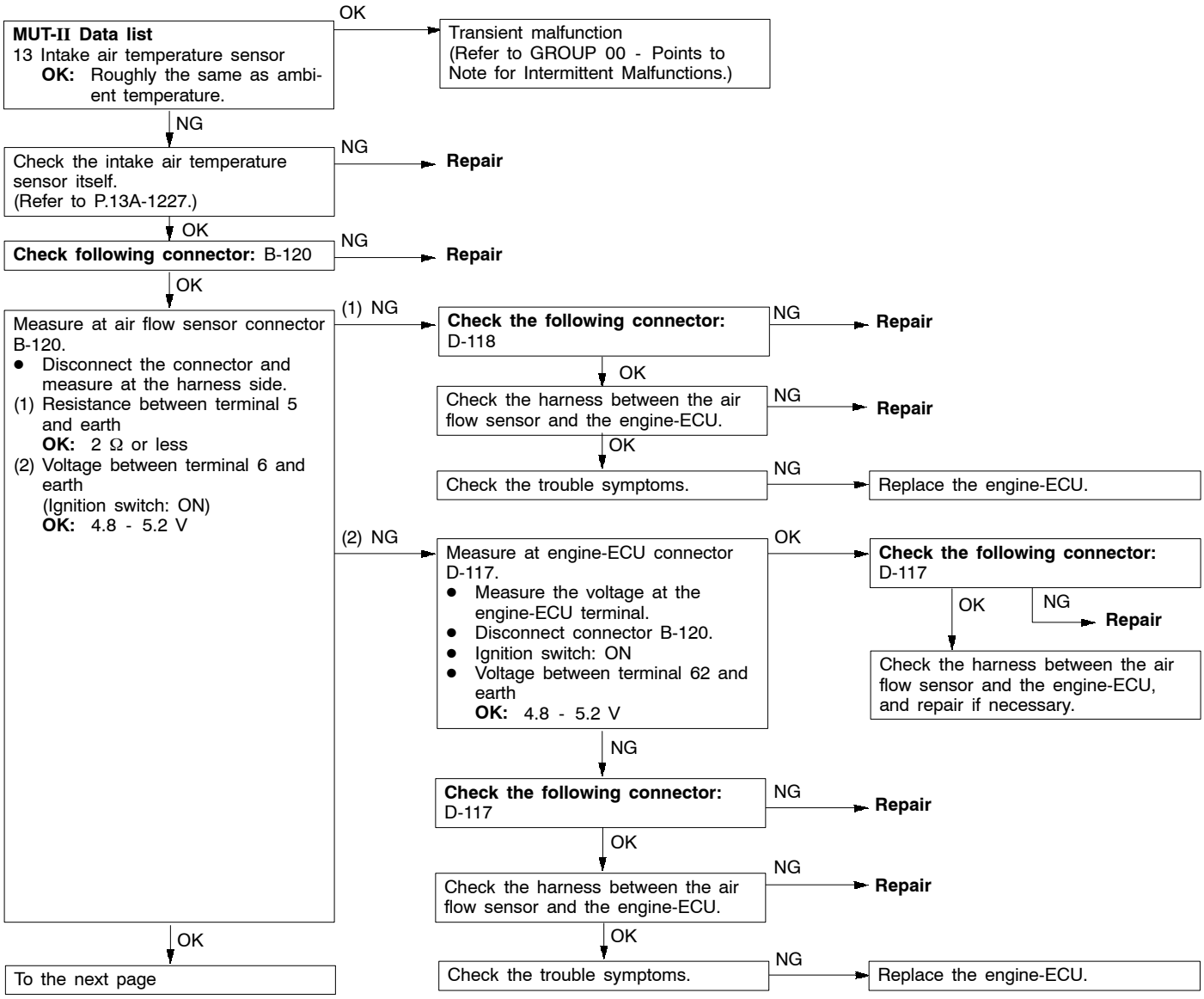


Purchased from www.WorkshopManuals.co.uk

www.WorkshopManuals.co.uk

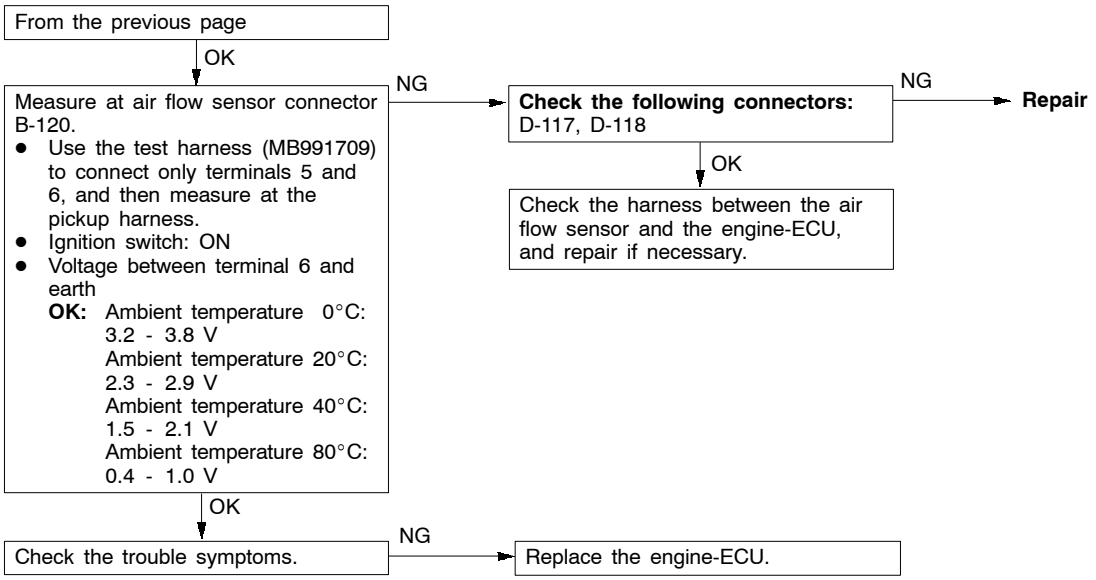


| Code No.P0115 Engine coolant temperature sensor system | Probable cause |
|---|---|
| Range of Check<br>● Engine: Two seconds after the engine has been started<br>Set Conditions<br>● The sensor output voltage is 4.6 V or more for four seconds (equivalent to -45°C of engine coolant temperature)<br>or<br>● The sensor output voltage is 0.1 V or less for four seconds (equivalent to 140°C of engine coolant temperature) | ● Malfunction of engine coolant temperature sensor<br>● Open or short circuit in the engine coolant temperature sensor circuit or loose connector contact<br>● Malfunction of engine-ECU |
| Range of Check<br>● Engine: After starting<br>Set Conditions<br>● The engine coolant temperature has reduced from over 40°C to less than 40°C, and that condition has lasted for five minutes or more. | |

Purchased from www.WorkshopManuals.co.uk

www.WorkshopManuals.co.uk

**MUT-II Data list**
21 Engine coolant temperature sensor
**OK:** When the engine is cold, the temperature is roughly the same as ambient temperature. If warm, it is 80 - 120°C.

OK → Transient malfunction (Refer to GROUP 00 - Points to Note for Intermittent Malfunctions.)

NG ↓

Measure at engine coolant temperature sensor connector B-56.
- Disconnect the connector and measure at the harness side.
- Resistance between terminals 1 and 2
  **OK:** At 20°C of engine coolant temperature: 2.1 - 2.7 kΩ
  At 80°C of engine coolant temperature: 0.26 - 0.36 kΩ

NG → **Replace**

OK ↓

**Check the following connector:** B-56

NG → **Repair**

OK ↓

Measure at engine coolant temperature sensor connector B-56.
- Disconnect the connector and measure at the harness side.

(1) Voltage between terminal 1 and earth (Ignition switch: ON)
**OK:** 4.8 - 5.2 V
(2) Resistance between terminal 2 and earth
**OK:** 2 Ω or less

(1) NG →

Measure at engine-ECU connector D-117.
- Measure the voltage at the engine-ECU terminal.
- Disconnect connector B-56.
- Ignition switch: ON
- Voltage between terminal 44 and earth
  **OK:** 4.8 - 5.2 V

OK → **Check the following connector:** D-117

OK ↓ Check the harness wire between the engine coolant temperature sensor and the engine-ECU, and repair if necesary.

NG → **Repair**

NG ↓

**Check the following connector:** D-117

NG → **Repair**

OK ↓

Check the harness wire between the engine coolant temperature sensor and the engine-ECU.

NG → **Repair**

OK ↓

Check the trouble symptoms.

NG → Replace the engine-ECU.

(2) NG →

**Check the following connector:** D-118

NG → **Repair**

OK ↓

Check the harness wire between the engine coolant temperature sensor and the engine-ECU.

NG → **Repair**

OK ↓

Check the trouble symptoms.

NG → Replace the engine-ECU.

OK ↓

To the next page

Purchased from www.WorkshopManuals.co.uk

www.WorkshopManuals.co.uk

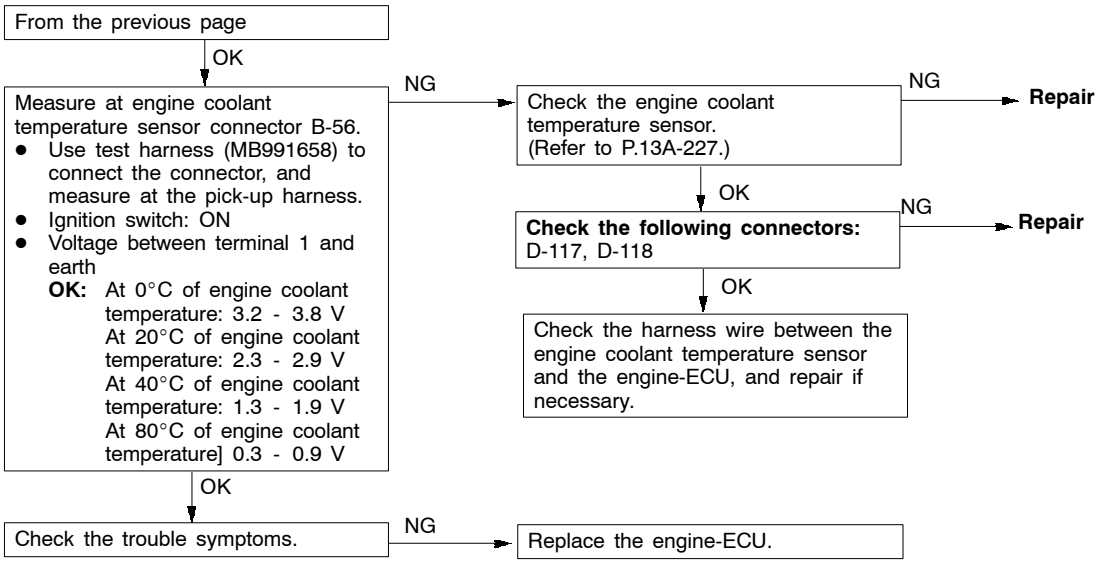


Purchased from www.WorkshopManuals.co.uk

www.WorkshopManuals.co.uk

| Code No.P0120 Throttle position sensor (1st channel) system | Probable cause |
|---|---|
| The throttle valve controller judges a malfunction, and then transmit the result to the engine-ECU.<br>Range of Check<br>● Ignition switch: ON<br>Set Conditions<br>● The sensor output voltage is 0.2 V or less.<br>or<br>● The sensor output voltage is 4.85 V or more and the throttle position sensor (2nd channel) output voltage is 2.5V or more.<br>or<br>● The throttle position sensor (1st channel) and throttle position sensor (2nd channel) combination output voltage is outside 4 - 6 V.<br>or<br>● The opening angle of throttle position sensor (1st channel) is different from its target by 1 V or more.<br>or<br>● The throttle position sensor (1st channel) output changes within 25 mV when the throttle control servo moves one step. | ● Malfunction of throttle position sensor<br>● Open or short circuit in the throttle position sensor (1st channel) circuit or loose connector contact<br>● Malfunction of throttle valve controller<br>● Malfunction of engine-ECU |

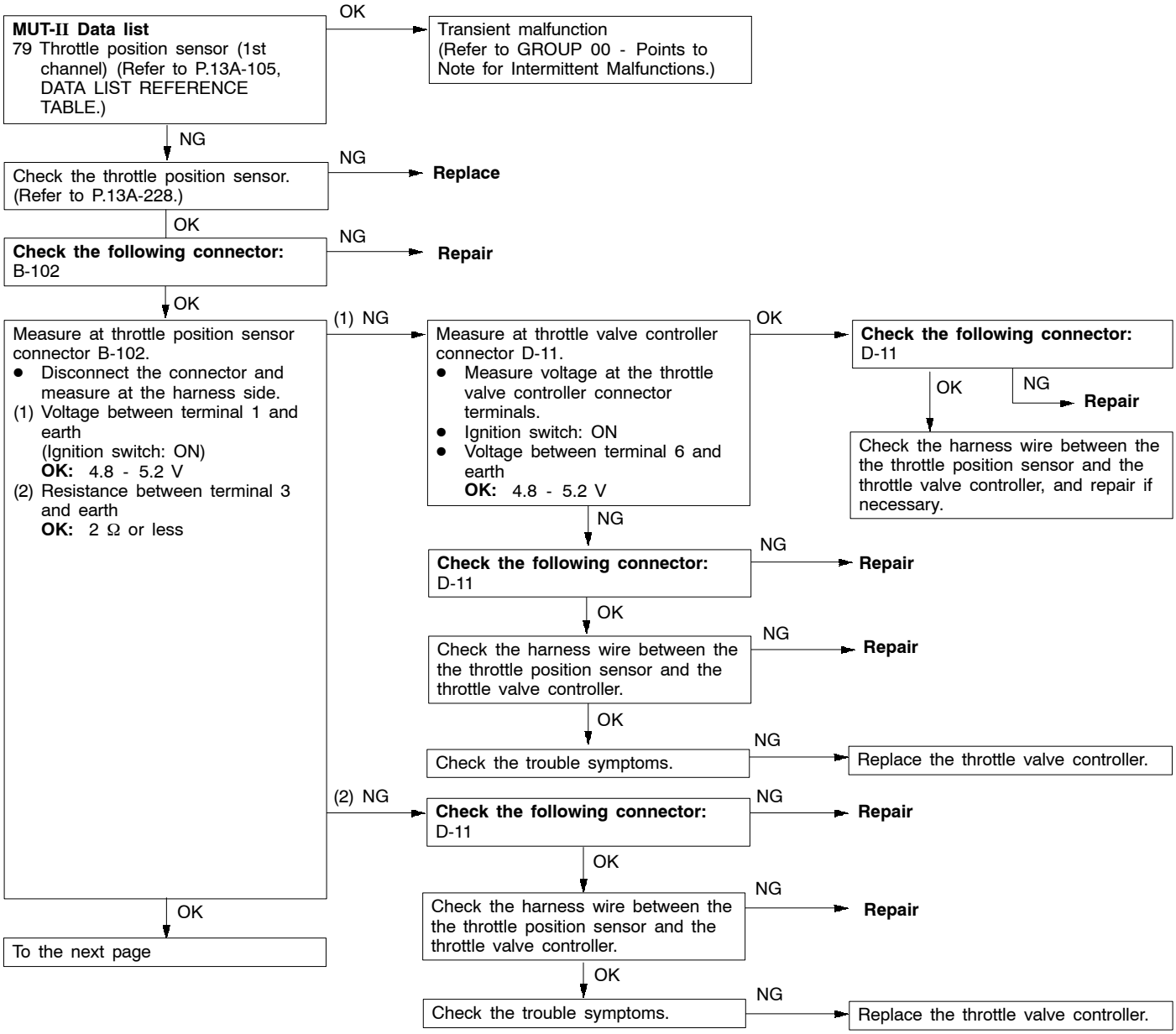


Purchased from www.WorkshopManuals.co.uk

www.WorkshopManuals.co.uk

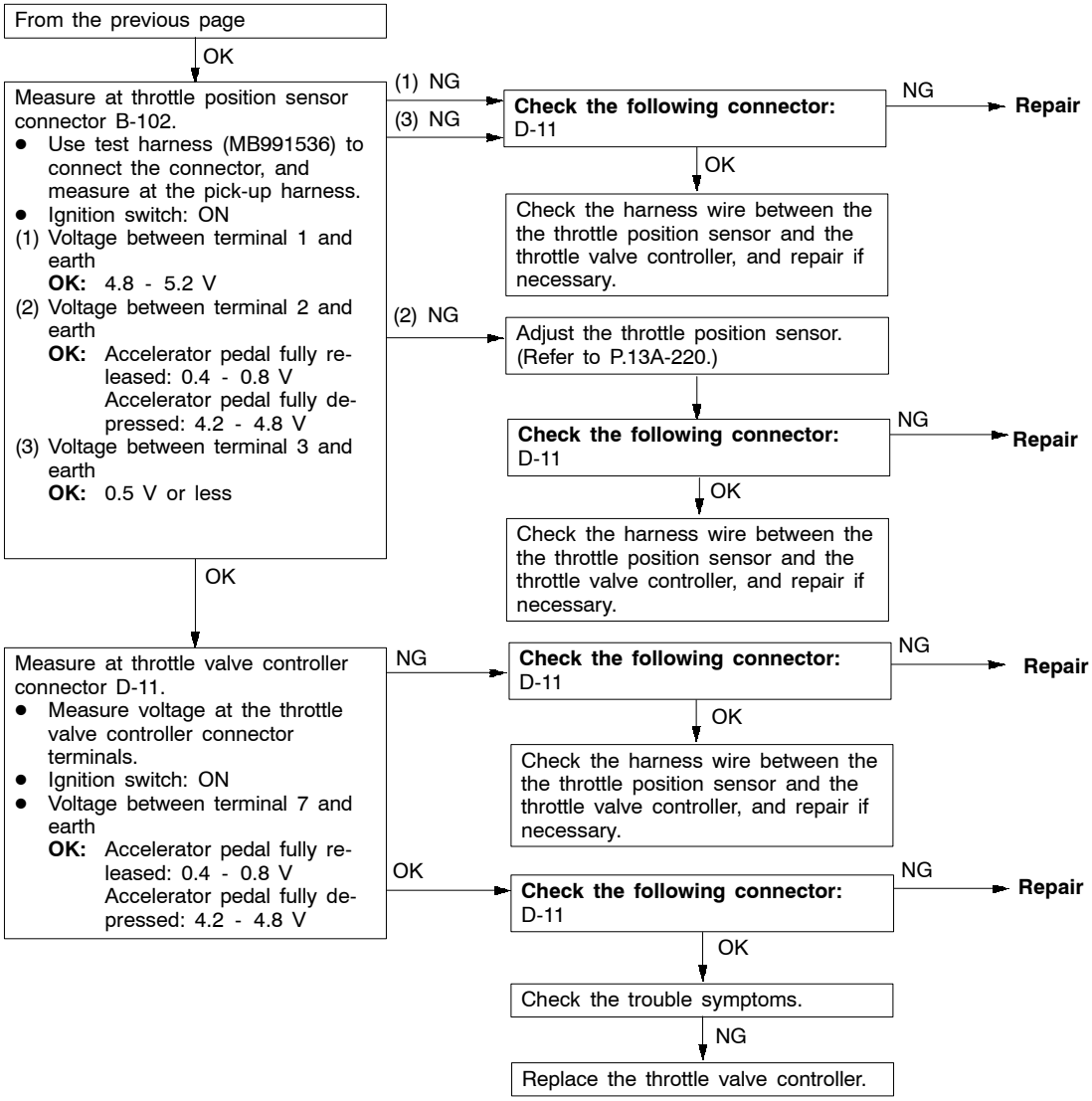


Purchased from www.WorkshopManuals.co.uk

www.WorkshopManuals.co.uk

| Code No.P0125 Feedback system | Probable cause |
|---|---|
| Range of Check<br>● The engine coolant temperature is approx. 80°C or more.<br>● During stoichiometric feedback control<br>● The vechile is not being deccelerated.<br>Set Conditions<br>● Oxygen sensor (front) output voltage has been higher or lower than 0.5 V for at least thirty seconds. | ● Malfunction of oxygen sensor (front)<br>● Open or short circuit in the oxygen sensor (front) circuit or loose connector contact<br>● Malfunction of engine-ECU |

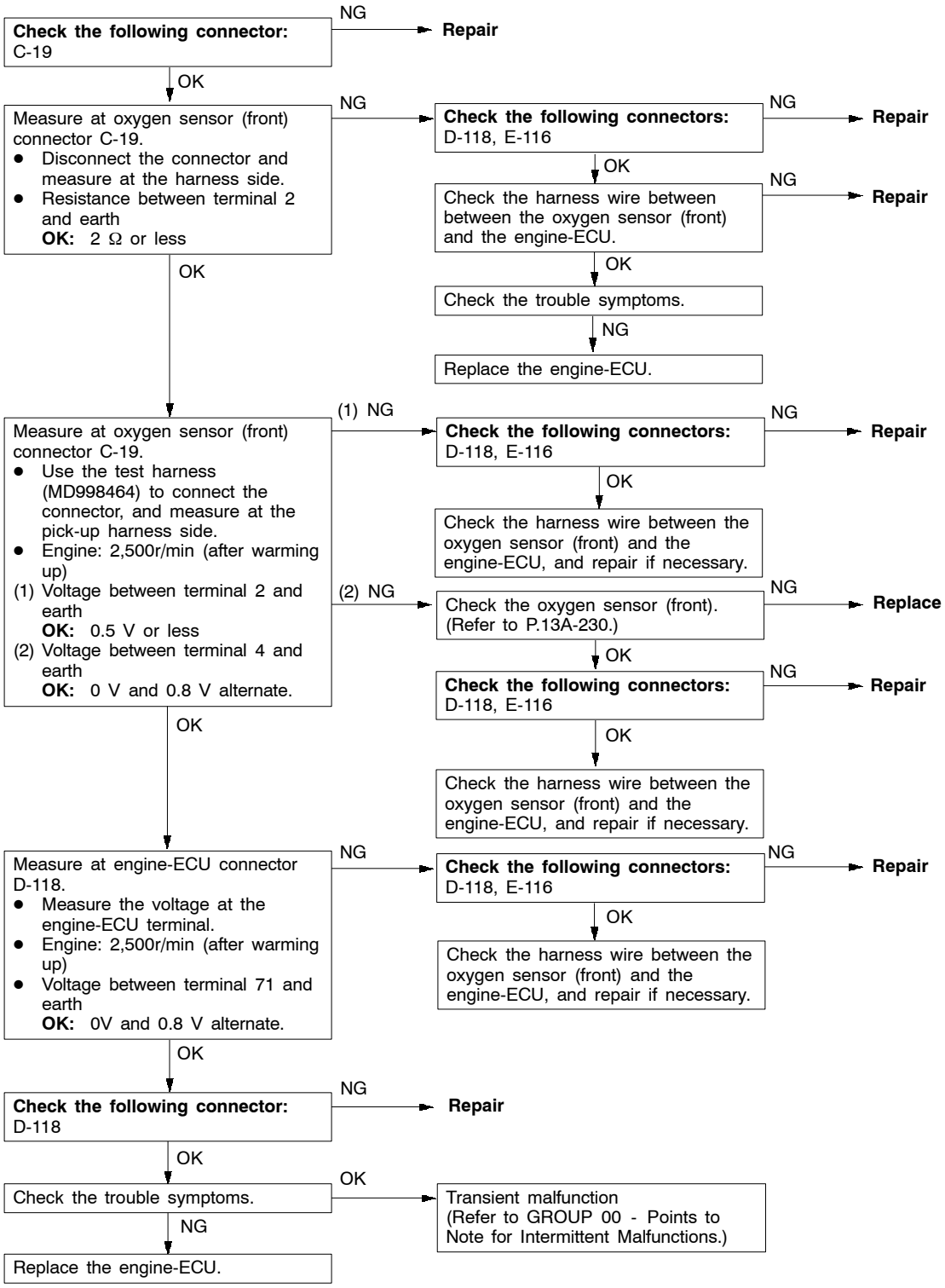


Purchased from www.WorkshopManuals.co.uk

www.WorkshopManuals.co.uk

| Code No.P0130 Oxygen sensor (front) system <sensor 1> | Probable cause |
|---|---|
| Range of Check<br>● Three minutes have been passed since the engine has been started.<br>● The engine coolant temperature is approx. 80°C or more.<br>● Intake air temperature is 20 - 50°C<br>● Engine speed is 1,200 r/min or more<br>● Driving on a level surface at constant speed.<br>Set Conditions<br>● The oxygen sensor (front) output voltage is 4.5 V or more when the sensor output voltage is 0.2 V or less and a voltage of 5 V is applied to the oxygen sensor (front) inside the engine-ECU. | ● Malfunction of oxygen sensor (front)<br>● Open or short circuit in the oxygen sensor (front) circuit or loose connector contact<br>● Malfunction of engine-ECU |
| Range of Check<br>● Engine speed is 3,000 r/min or less<br>● During driving<br>● During air/fuel ratio feedback control<br>Set Conditions<br>● The oxygen sensor (front) output frequency is five or less per 12 seconds on average. | |

Purchased from www.WorkshopManuals.co.uk

www.WorkshopManuals.co.uk

**Check the following connector:**
C-19

NG → **Repair**

OK ↓

Measure at oxygen sensor (front) connector C-19.
- Disconnect the connector and measure at the harness side.
- Resistance between terminal 2 and earth
  **OK:** 2 Ω or less

NG → **Check the following connectors:**
D-118, E-116

NG → **Repair**

OK ↓

Check the harness wire between between the oxygen sensor (front) and the engine-ECU.

NG → **Repair**

OK ↓

Check the trouble symptoms.

NG ↓

Replace the engine-ECU.

OK ↓

Measure at oxygen sensor (front) connector C-19.
- Use the test harness (MD998464) to connect the connector, and measure at the pick-up harness side.
- Engine: 2,500r/min (after warming up)

(1) Voltage between terminal 2 and earth
**OK:** 0.5 V or less

(2) Voltage between terminal 4 and earth
**OK:** 0 V and 0.8 V alternate.

(1) NG → **Check the following connectors:**
D-118, E-116

NG → **Repair**

OK ↓

Check the harness wire between the oxygen sensor (front) and the engine-ECU, and repair if necessary.

(2) NG → Check the oxygen sensor (front). (Refer to P.13A-230.)

NG → **Replace**

OK ↓

**Check the following connectors:**
D-118, E-116

NG → **Repair**

OK ↓

Check the harness wire between the oxygen sensor (front) and the engine-ECU, and repair if necessary.

OK ↓

Measure at engine-ECU connector D-118.
- Measure the voltage at the engine-ECU terminal.
- Engine: 2,500r/min (after warming up)
- Voltage between terminal 71 and earth
  **OK:** 0V and 0.8 V alternate.

NG → **Check the following connectors:**
D-118, E-116

NG → **Repair**

OK ↓

Check the harness wire between the oxygen sensor (front) and the engine-ECU, and repair if necessary.

OK ↓

**Check the following connector:**
D-118

NG → **Repair**

OK ↓

Check the trouble symptoms.

OK → Transient malfunction (Refer to GROUP 00 - Points to Note for Intermittent Malfunctions.)

NG ↓

Replace the engine-ECU.

Purchased from www.WorkshopManuals.co.uk

www.WorkshopManuals.co.uk

| Code No.P0135 Oxygen sensor heater (front) system <sensor 1> | Probable cause |
|---|---|
| Range of Check<br>● The engine coolant temperature is approx. 20°C or more.<br>● The oxygen sensor heater (front) remains on.<br>● The engine speed is 50 r/min or more.<br>● Battery voltage is 11 - 16 V.<br>Set Conditions<br>● The current, which flows through the oxygen sensor heater (front), is 0.2 A or less or 3.5 A or more for six seconds. | ● Malfunction of oxygen sensor heater (front)<br>● Open or short circuit in the oxygen sensor heater (front) circuit or loose connector contact<br>● Malfunction of engine-ECU |

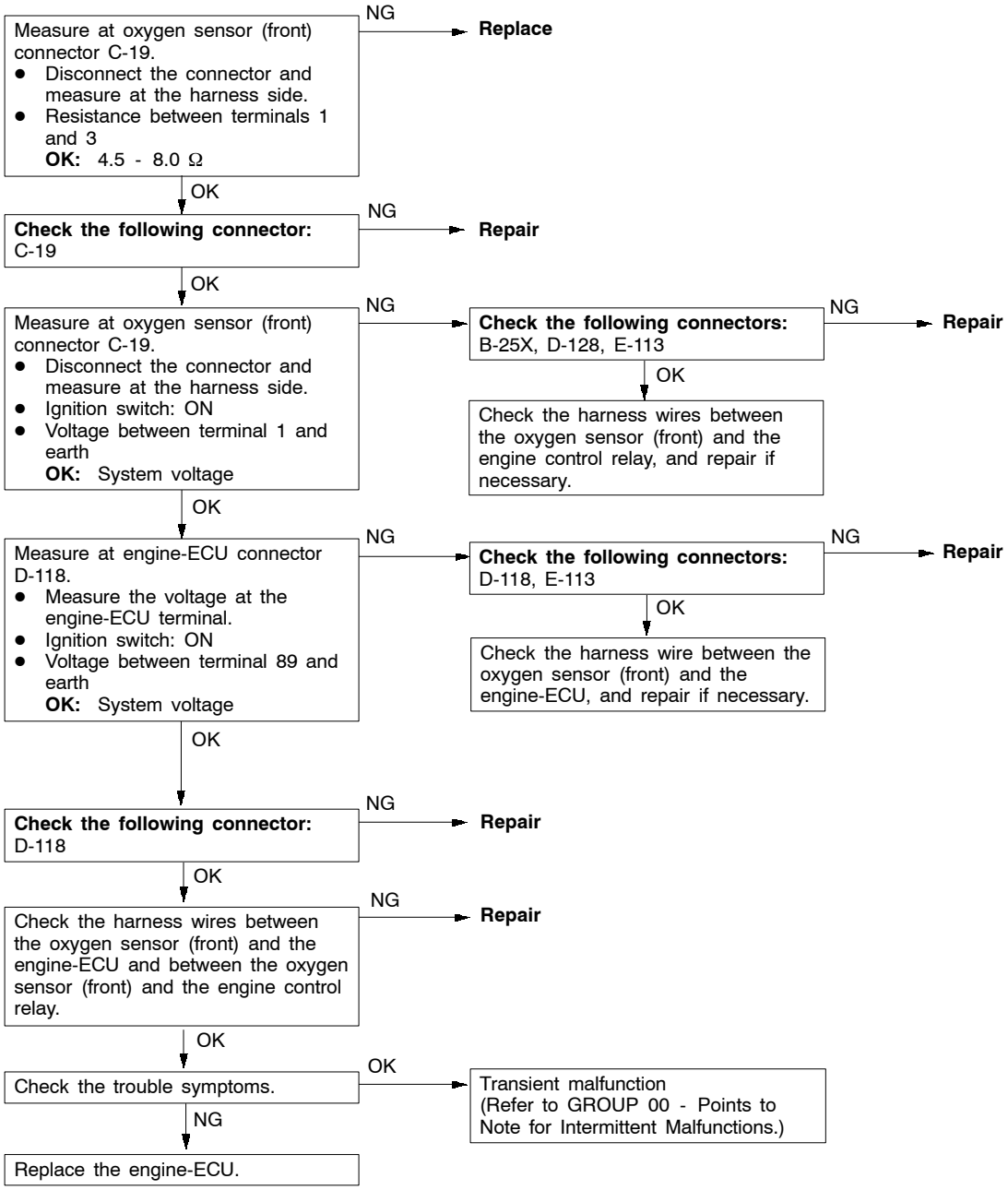


Purchased from www.WorkshopManuals.co.uk

www.WorkshopManuals.co.uk

| Code No.P0136 Oxygen sensor (rear) system <sensor 2> | Probable cause |
|---|---|
| Range of Check<br>● Three minutes have been passed since the engine has been started.<br>● The engine coolant temperature is approx. 80°C or more.<br>● Intake air temperature is 20 - 50°C<br>● Engine speed is 1,200 r/min or more<br>● Driving on a level surface at constant speed.<br>Set Conditions<br>● The oxygen sensor (rear) output voltage is 4.5 V or more when the sensor output voltage is 0.2 V or less and a voltage of 5 V is applied to the oxygen sensor (rear) inside the engine-ECU. | ● Malfunction of oxygen sensor (rear)<br>● Open or short circuit in the oxygen sensor (rear) circuit or loose connector contact<br>● Malfunction of engine-ECU |
| Range of Check<br>● Two seconds have passed after the ECU detected an open circuit.<br>● When the oxygen sensor (front) is in good condition.<br>Set Conditions<br>● When the air/fuel ratio is rich, the oxygen sensor (front) output voltage is 0.5 V or more, the oxygen sensor (rear) output voltage is less than 0.1 V, and the oxygen sensor (rear) output voltage fluctuates within 0.078 V. | |

Purchased from www.WorkshopManuals.co.uk

www.WorkshopManuals.co.uk

**Check the following connector:**
C-10

NG → **Repair**

OK ↓

Measure at oxygen sensor (rear) connector C-10.
- Disconnect the connector and measure at the harness side.
- Resistance between terminal 2 and earth
  **OK:** 2 Ω or less

NG → **Check the following connectors:**
D-118, E-116

NG → **Repair**

OK ↓

Check the harness wire between between the oxygen sensor (rear) and the engine-ECU.

NG → **Repair**

OK ↓

Check the trouble symptoms.

NG ↓

Replace the engine-ECU.

OK ↓

Measure at oxygen sensor (rear) connector C-10.
- Use the test harness (MD998464) to connect the connector, and measure at the pick-up harness side.
- Engine: 2,500r/min (after warming up)

(1) Voltage between terminal 2 and earth
**OK:** 0.5 V or less

(2) Voltage between terminal (4) and earth
**OK:** 0 V and 0.8 V alternate.

(1) NG → **Check the following connectors:**
D-118, E-116

NG → **Repair**

OK ↓

Check the harness wire between the oxygen sensor (rear) and the engine-ECU, and repair if necessary.

(2) NG → Check the oxygen sensor (rear). (Refer to P.13A-230.)

NG → **Replace**

OK ↓

**Check the following connectors:**
D-117, E-116

NG → **Repair**

OK ↓

Check the harness wire between the oxygen sensor (rear) and the engine-ECU, and repair if necessary.

OK ↓

Measure at engine-ECU connector D-117.
- Measure the voltage at the engine-ECU terminal.
- Engine: 2,500r/min (after warming up)
- Voltage between terminal 53 and earth
  **OK:** 0V and 0.8 V alternate.

NG → **Check the following connectors:**
D-117, E-116

NG → **Repair**

OK ↓

Check the harness wire between the oxygen sensor (rear) and the engine-ECU, and repair if necessary.

OK ↓

**Check the following connector:**
D-117

NG → **Repair**

OK ↓

Check the trouble symptoms.

OK → Transient malfunction (Refer to GROUP 00 - Points to Note for Intermittent Malfunctions.)

NG ↓

Replace the engine-ECU.

Purchased from www.WorkshopManuals.co.uk

www.WorkshopManuals.co.uk

| Code No.P0141 Oxygen sensor heater (rear) system <sensor 2> | Probable cause |
|---|---|
| Range of Check<br>● The engine coolant temperature is approx. 20°C or more.<br>● The oxygen sensor heater (rear) remains on.<br>● The engine speed is 50 r/min or more.<br>● Battery voltage is 11 - 16 V.<br>Set Conditions<br>● The current, which flows through the oxygen sensor heater (rear), is 0.2 A or less or 3.5 A or more for six seconds. | ● Malfunction of oxygen sensor heater (rear)<br>● Open or short circuit in the oxygen sensor heater (rear) circuit or loose connector contact<br>● Malfunction of engine-ECU |

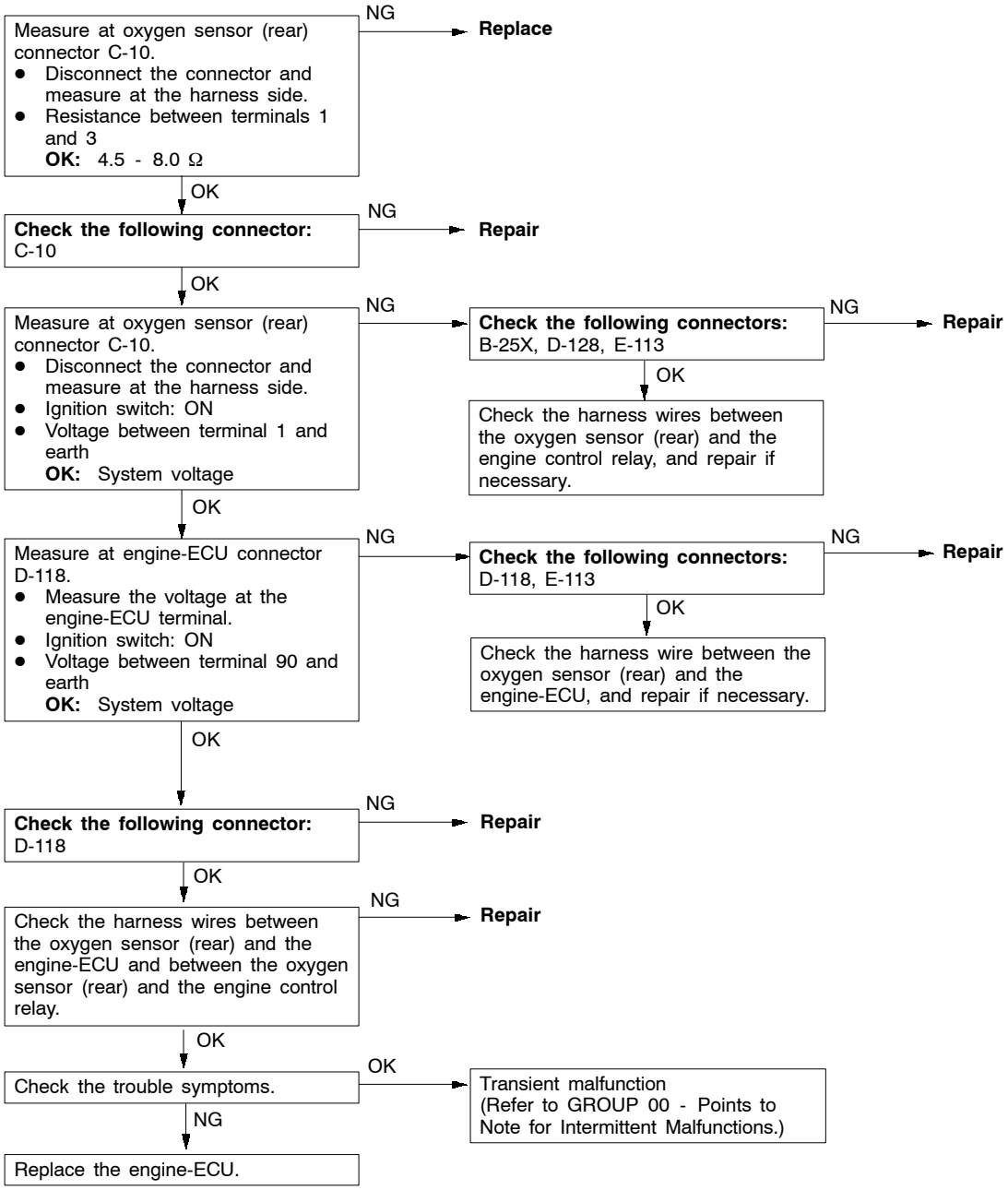


Purchased from www.WorkshopManuals.co.uk

www.WorkshopManuals.co.uk

| Code No.P0170 Abnormal fuel system | Probable cause |
|---|---|
| Range of Check<br>● Engine: Being learning the air-fuel ratio<br>Set Conditions<br>● Ten seconds or more have been passed while the fuel injection amount compensation value is too low.<br>or<br>● Ten seconds or more have been passed while the fuel injection amount compensation value is too high. | ● Malfunction of fuel supply system<br>● Malfunction of oxygen sensor (front)<br>● Malfunction of intake air temperature sensor<br>● Malfunction of barometric pressure sensor<br>● Malfunction of air flow sensor<br>● Malfunction of engine-ECU |

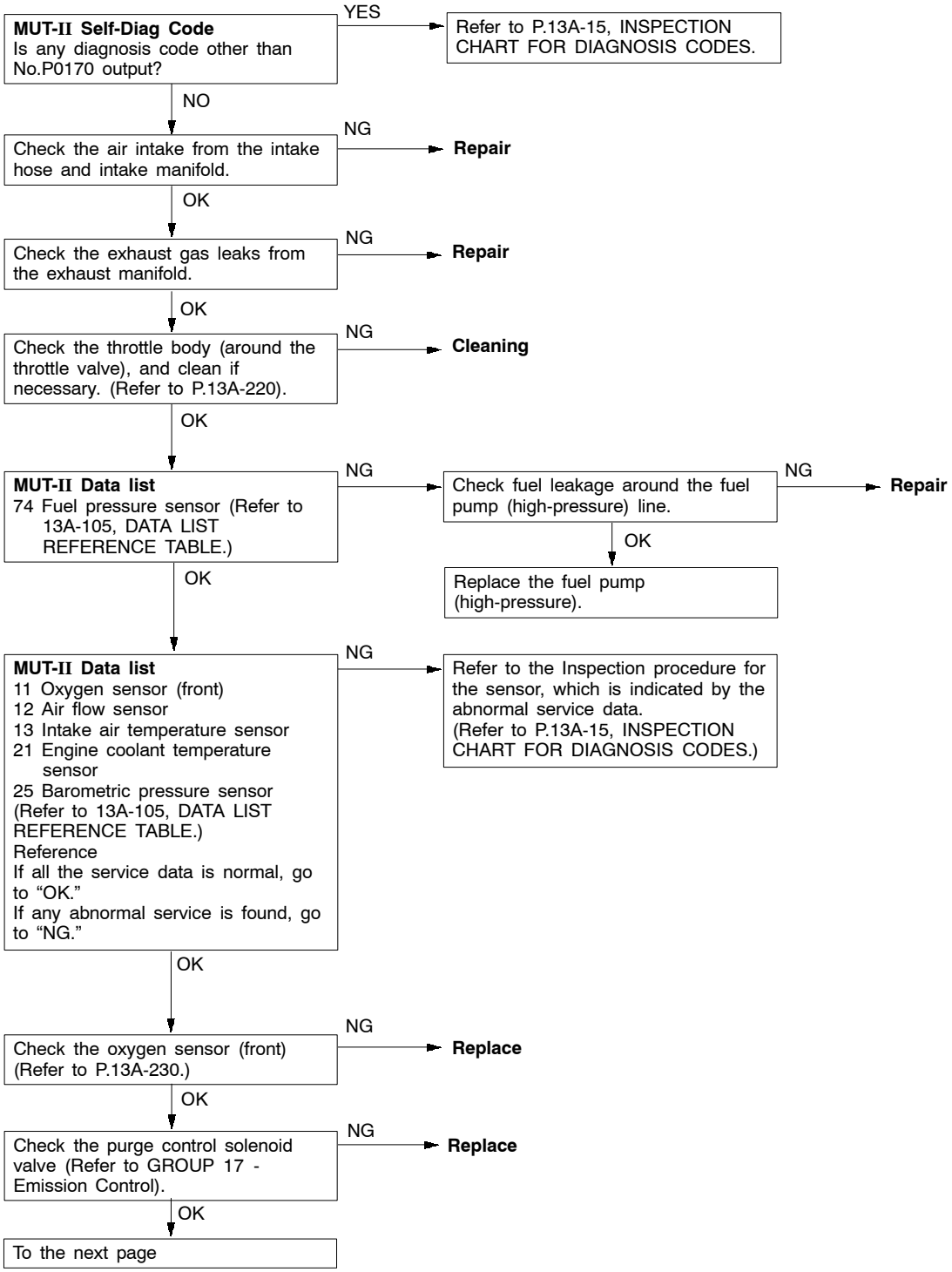


Purchased from www.WorkshopManuals.co.uk

www.WorkshopManuals.co.uk

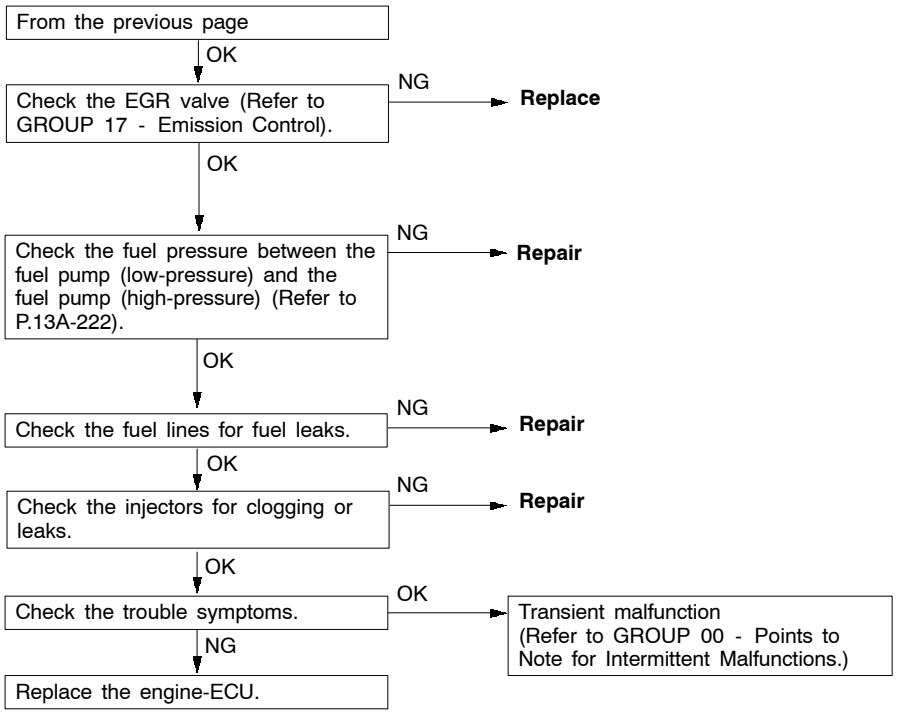


Purchased from www.WorkshopManuals.co.uk

www.WorkshopManuals.co.uk

| Code No.P0190 Abnormal fuel pressure | Probable cause |
|---|---|
| Range of Check<br>● Ignition switch: ON<br>Set Conditions<br>● The sensor output voltage is 4.8V or more, or 0.2 V or less for four seconds. | ● Malfunction of of fuel pressure sensor<br>● Open or short circuit in the fuel pressure sensor circuit or loose connector contact<br>● Malfunction of engine-ECU |
| Range of Check<br>● The following conditions are detected temporarily after the engine has been started.<br>(1) Engine speed: 1,000 r/min or more<br>(2) Fuel pressure: 2 MPa or more<br>● Engine running<br>Set Conditions<br>● The fuel pressure is 6.9 MPa or more, or 2 MPa or less for four seconds. | ● Malfunction of high-pressure fuel pump<br>● Clogging of high-pressure fuel lines |
| This diagnosis code will also be output when air is trapped into the high-pressure fuel lines (such as poor fuel level). In that case, the air can be evacuated by operating the engine for at least 15 seconds at 2,000 r/min. After the repair, use the MUT-II to erase the diagnosis code. | ● Air trapped due to poor fuel level |

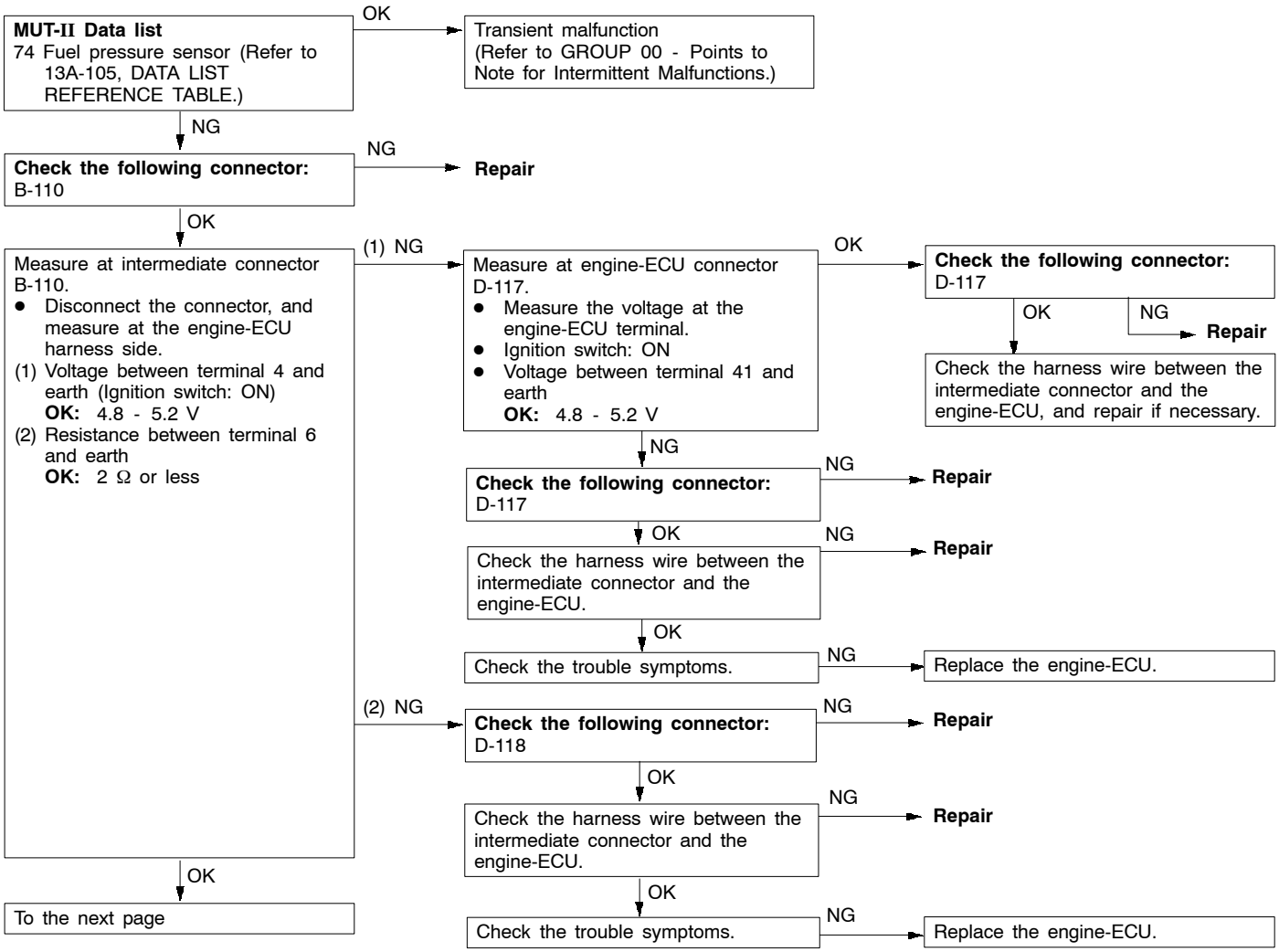


Purchased from www.WorkshopManuals.co.uk

www.WorkshopManuals.co.uk

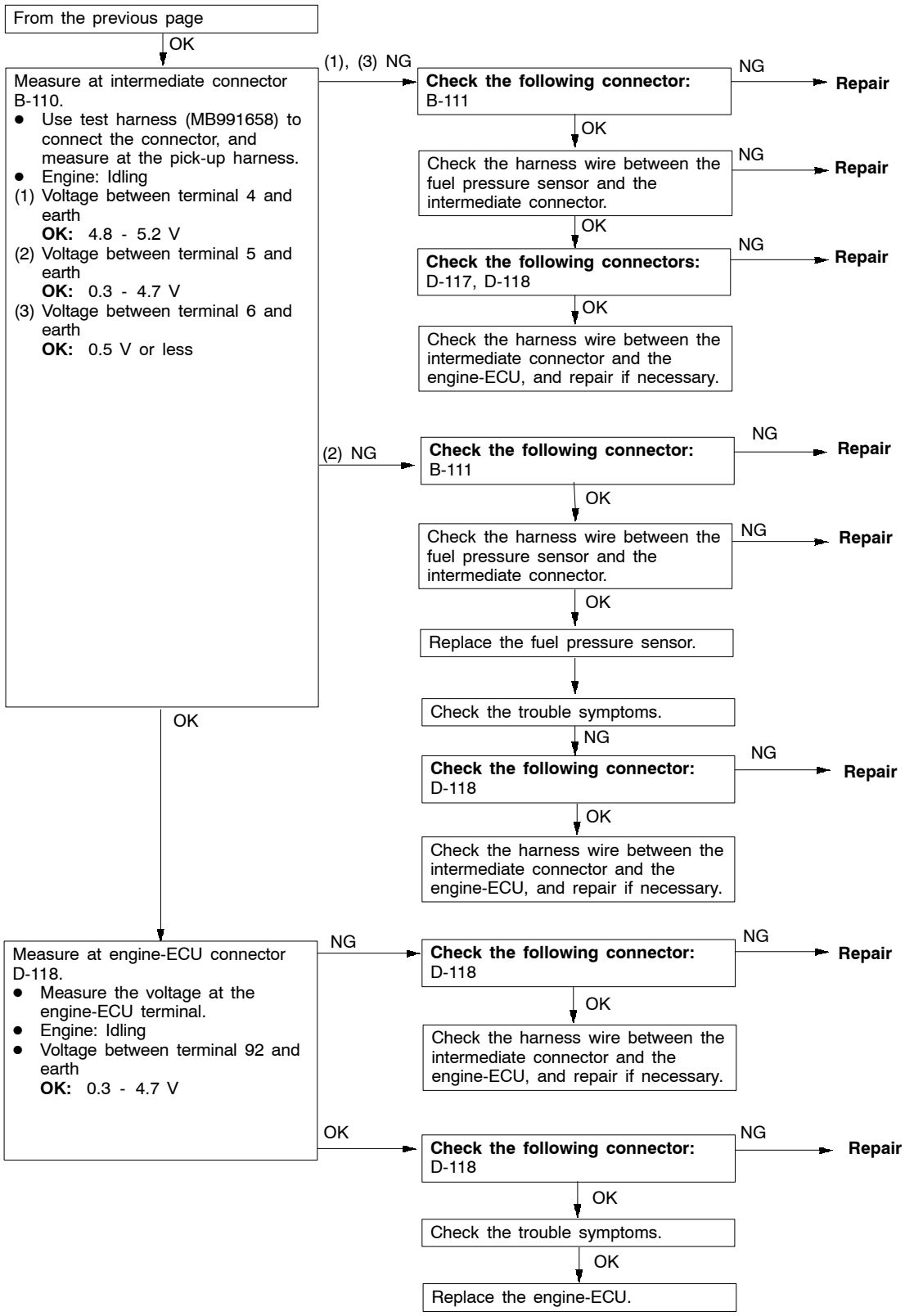


Purchased from www.WorkshopManuals.co.uk

www.WorkshopManuals.co.uk

| Code No.P0201 No.1 injector system | Probable cause |
|---|---|
| Range of Check<br>● The engine speed is 4,000 r/min or less.<br>● The battery voltage is 10 V or more.<br>● The fuel cut operation or the injector operation (by carrying out the Actuator Test) is not in progress.<br>Set Conditions<br>● The injector driver is not transmitting a injector open circuit check signal for four seconds. | ● Malfunction of No.1 injector<br>● Open or short circuit in the No.1 injector circuit or loose connector contact<br>● Malfunction of engine-ECU |

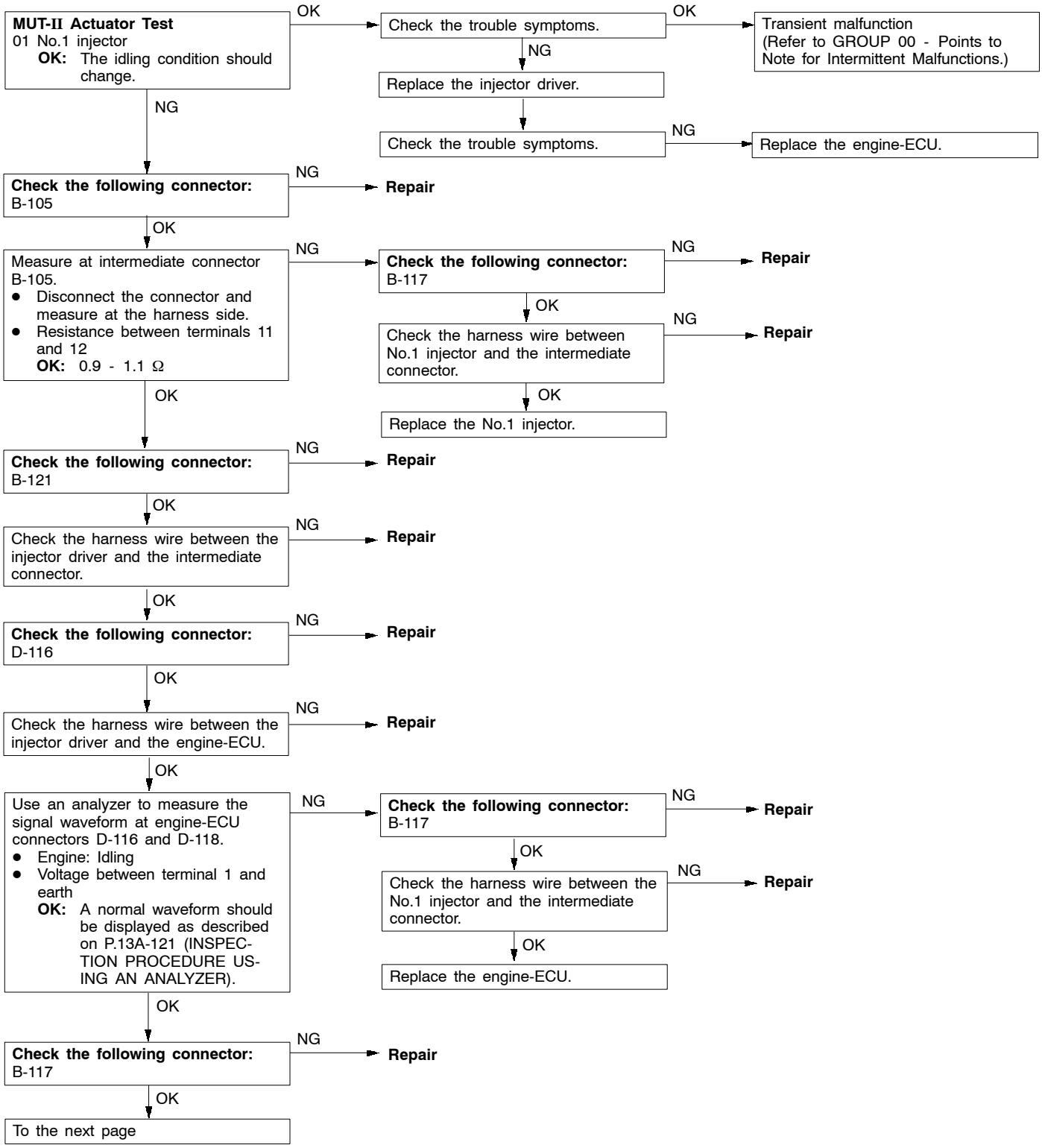


Purchased from www.WorkshopManuals.co.uk

www.WorkshopManuals.co.uk

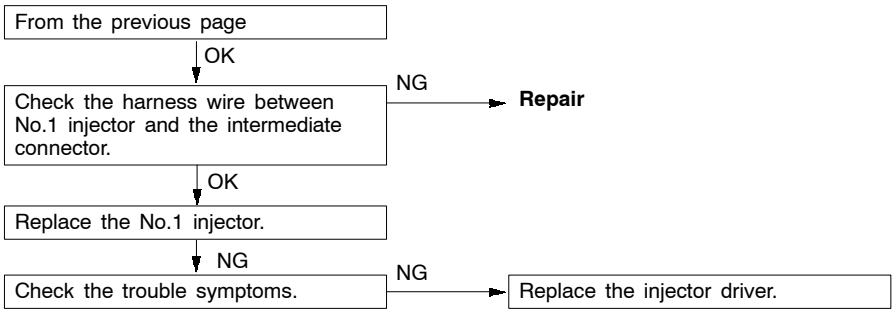


Purchased from www.WorkshopManuals.co.uk

www.WorkshopManuals.co.uk

| Code No.P0202 No.2 injector system | Probable cause |
|---|---|
| Range of Check<br>● The engine speed is 4,000 r/min or less.<br>● The battery voltage is 10 V or more.<br>● The fuel cut operation or the injector operation (by carrying out the Actuator Test) is not in progress.<br>Set Conditions<br>● The injector driver is not transmitting a injector open circuit check signal for four seconds. | ● Malfunction of No.2 injector<br>● Open or short circuit in the No.2 injector circuit or loose connector contact<br>● Malfunction of engine-ECU |

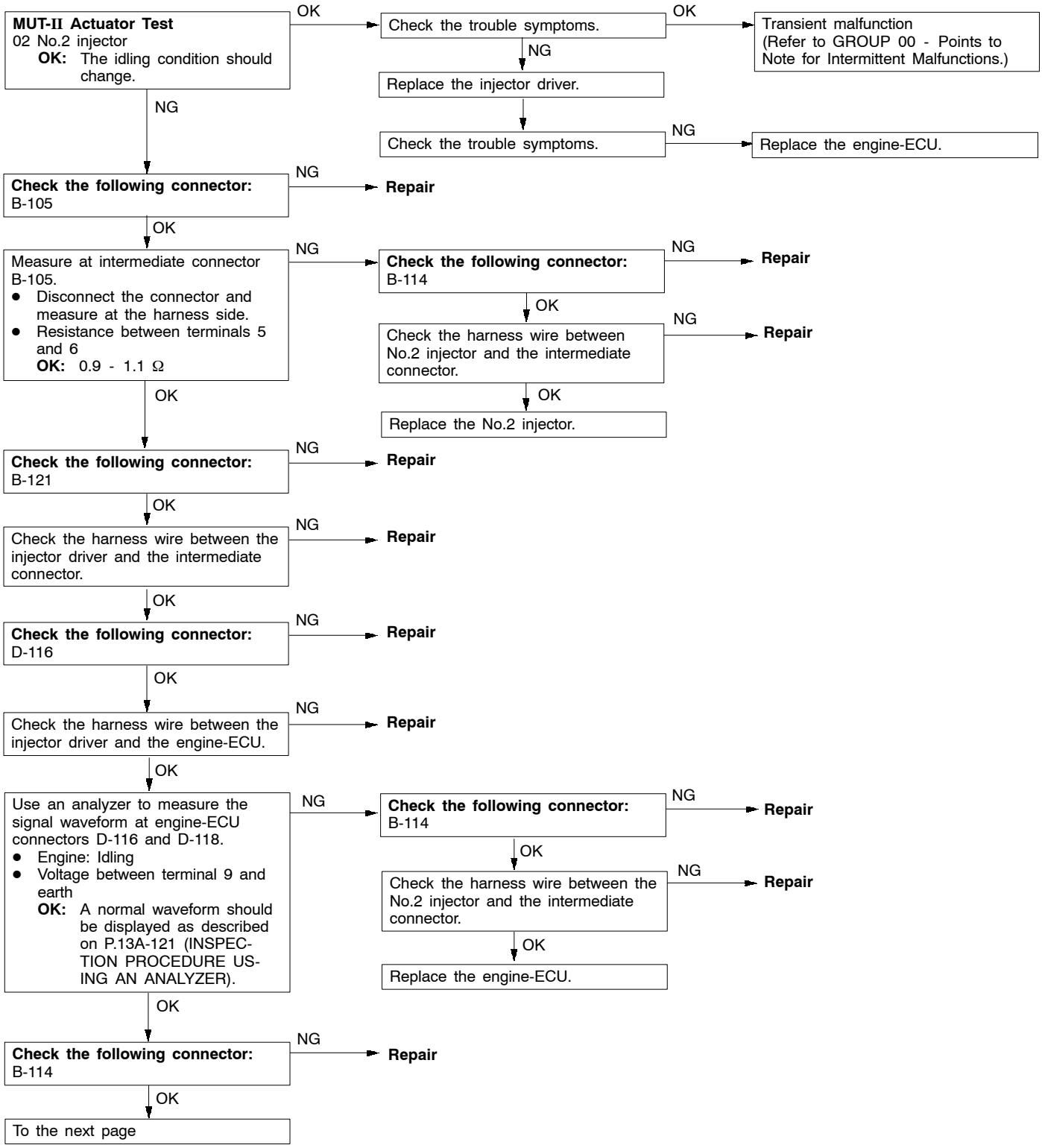


Purchased from www.WorkshopManuals.co.uk

www.WorkshopManuals.co.uk

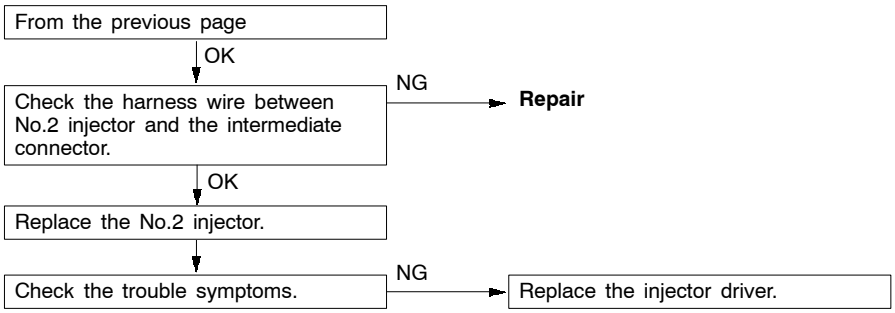


Purchased from www.WorkshopManuals.co.uk

www.WorkshopManuals.co.uk

| Code No.P0203 No.3 injector system | Probable cause |
|---|---|
| Range of Check<br>● The engine speed is 4,000 r/min or less.<br>● The battery voltage is 10 V or more.<br>● The fuel cut operation or the injector operation (by carrying out the Actuator Test) is not in progress.<br>Set Conditions<br>● The injector driver is not transmitting a injector open circuit check signal for four seconds. | ● Malfunction of No.3 injector<br>● Open or short circuit in the No.3 injector circuit or loose connector contact<br>● Malfunction of engine-ECU |

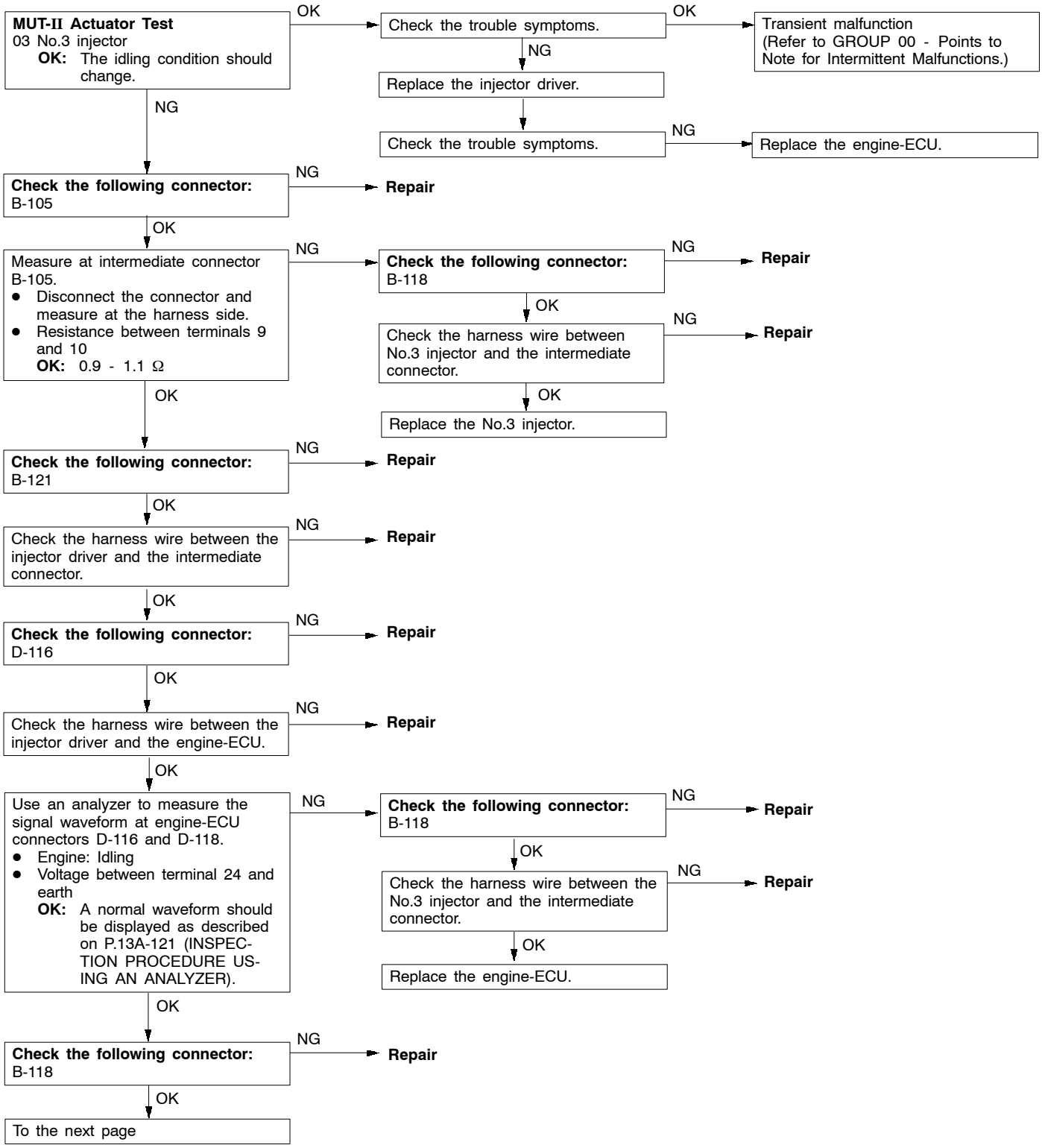


Purchased from www.WorkshopManuals.co.uk

www.WorkshopManuals.co.uk

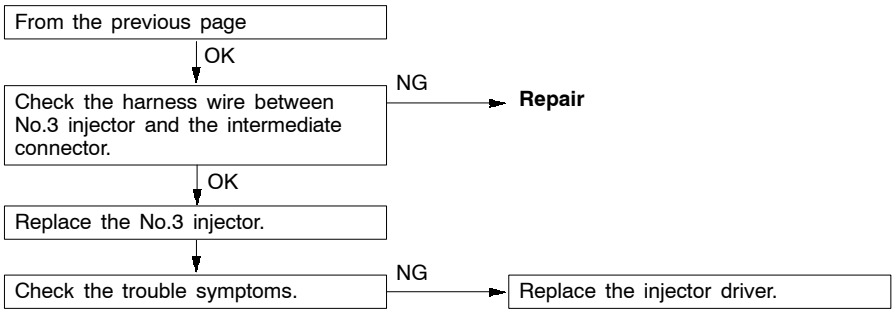


Purchased from www.WorkshopManuals.co.uk

www.WorkshopManuals.co.uk

| Code No.P0204 No.4 injector system | Probable cause |
|---|---|
| Range of Check<br>● The engine speed is 4,000 r/min or less.<br>● The battery voltage is 10 V or more.<br>● The fuel cut operation or the injector operation (by carrying out the Actuator Test) is not in progress.<br>Set Conditions<br>● The injector driver is not transmitting a injector open circuit check signal for four seconds. | ● Malfunction of No.4 injector<br>● Open or short circuit in the No.4 injector circuit or loose connector contact<br>● Malfunction of engine-ECU |

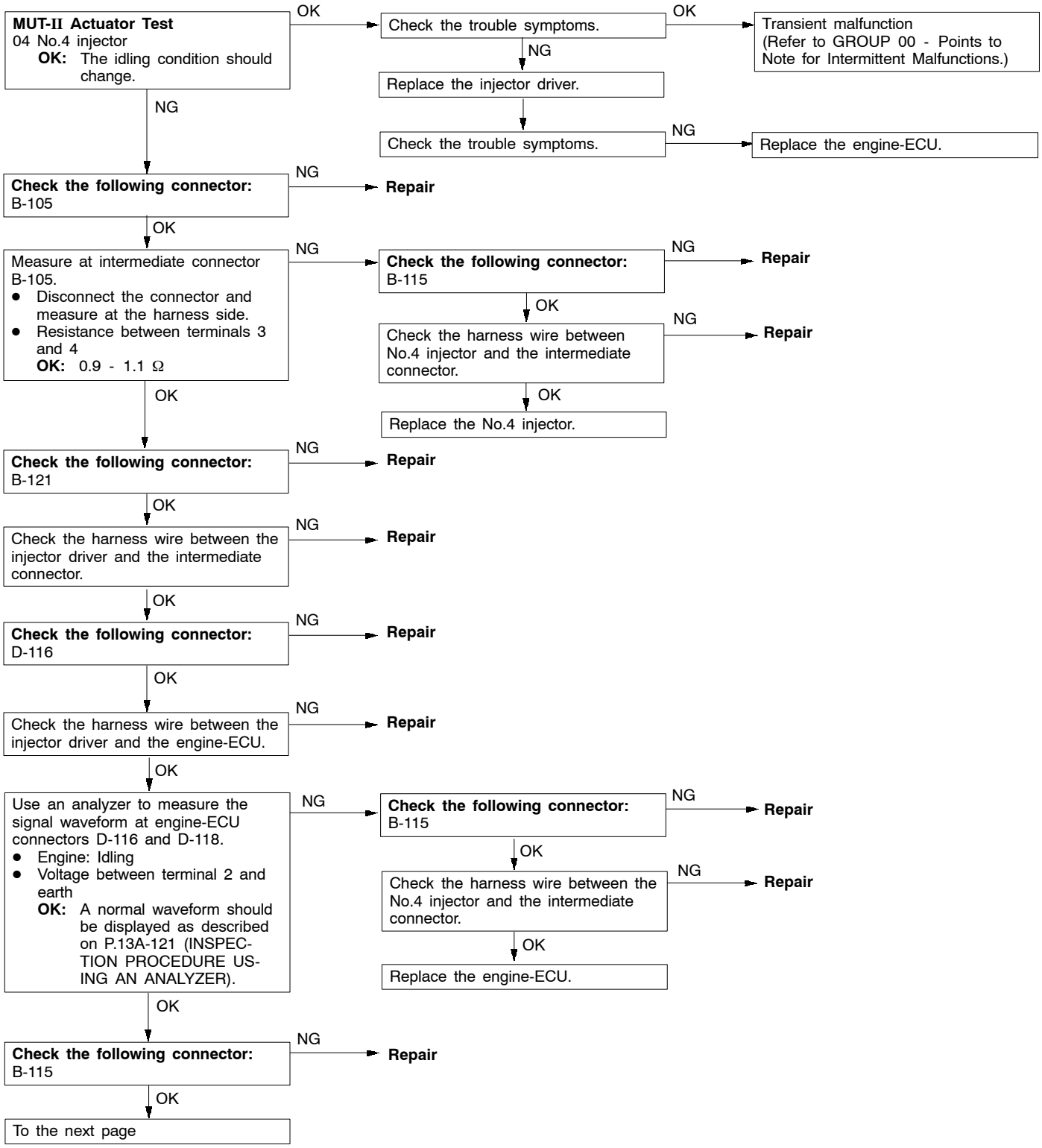


Purchased from www.WorkshopManuals.co.uk

www.WorkshopManuals.co.uk

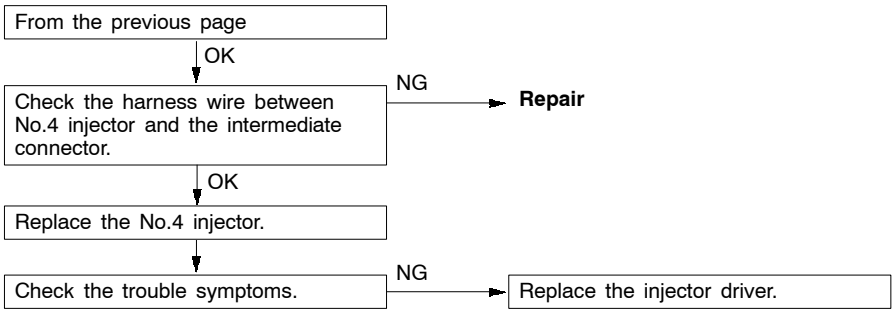


Purchased from www.WorkshopManuals.co.uk

www.WorkshopManuals.co.uk

| Code No.P0205 No.5 injector system | Probable cause |
|---|---|
| Range of Check<br>● The engine speed is 4,000 r/min or less.<br>● The battery voltage is 10 V or more.<br>● The fuel cut operation or the injector operation (by carrying out the Actuator Test) is not in progress.<br>Set Conditions<br>● The injector driver is not transmitting a injector open circuit check signal for four seconds. | ● Malfunction of No.5 injector<br>● Open or short circuit in the No.5 injector circuit or loose connector contact<br>● Malfunction of engine-ECU |

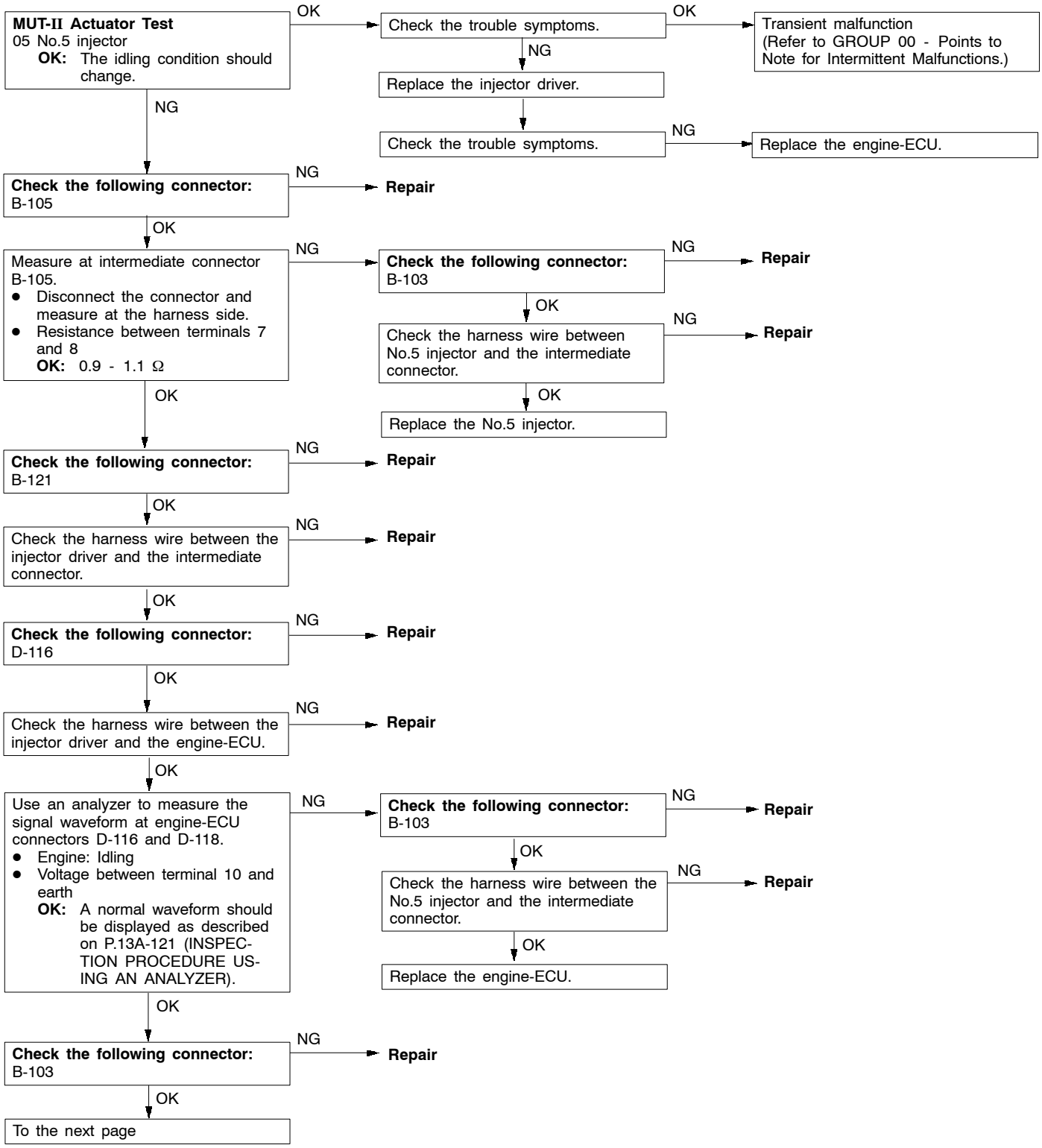


Purchased from www.WorkshopManuals.co.uk

www.WorkshopManuals.co.uk

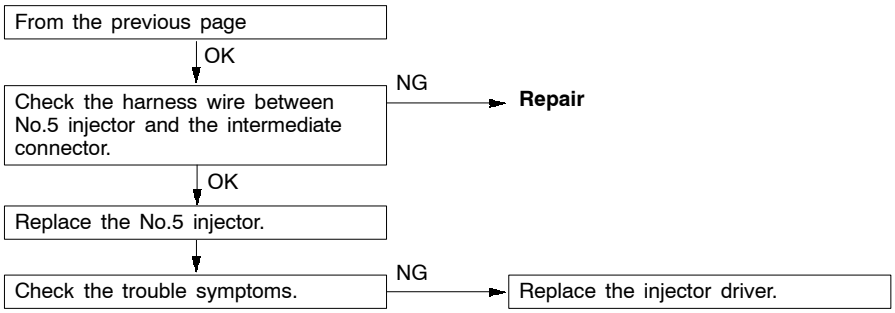


Purchased from www.WorkshopManuals.co.uk

www.WorkshopManuals.co.uk

| Code No.P0206 No.6 injector system | Probable cause |
|---|---|
| Range of Check<br>● The engine speed is 4,000 r/min or less.<br>● The battery voltage is 10 V or more.<br>● The fuel cut operation or the injector operation (by carrying out the Actuator Test) is not in progress.<br>Set Conditions<br>● The injector driver is not transmitting a injector open circuit check signal for four seconds. | ● Malfunction of No.6 injector<br>● Open or short circuit in the No.6 injector circuit or loose connector contact<br>● Malfunction of engine-ECU |

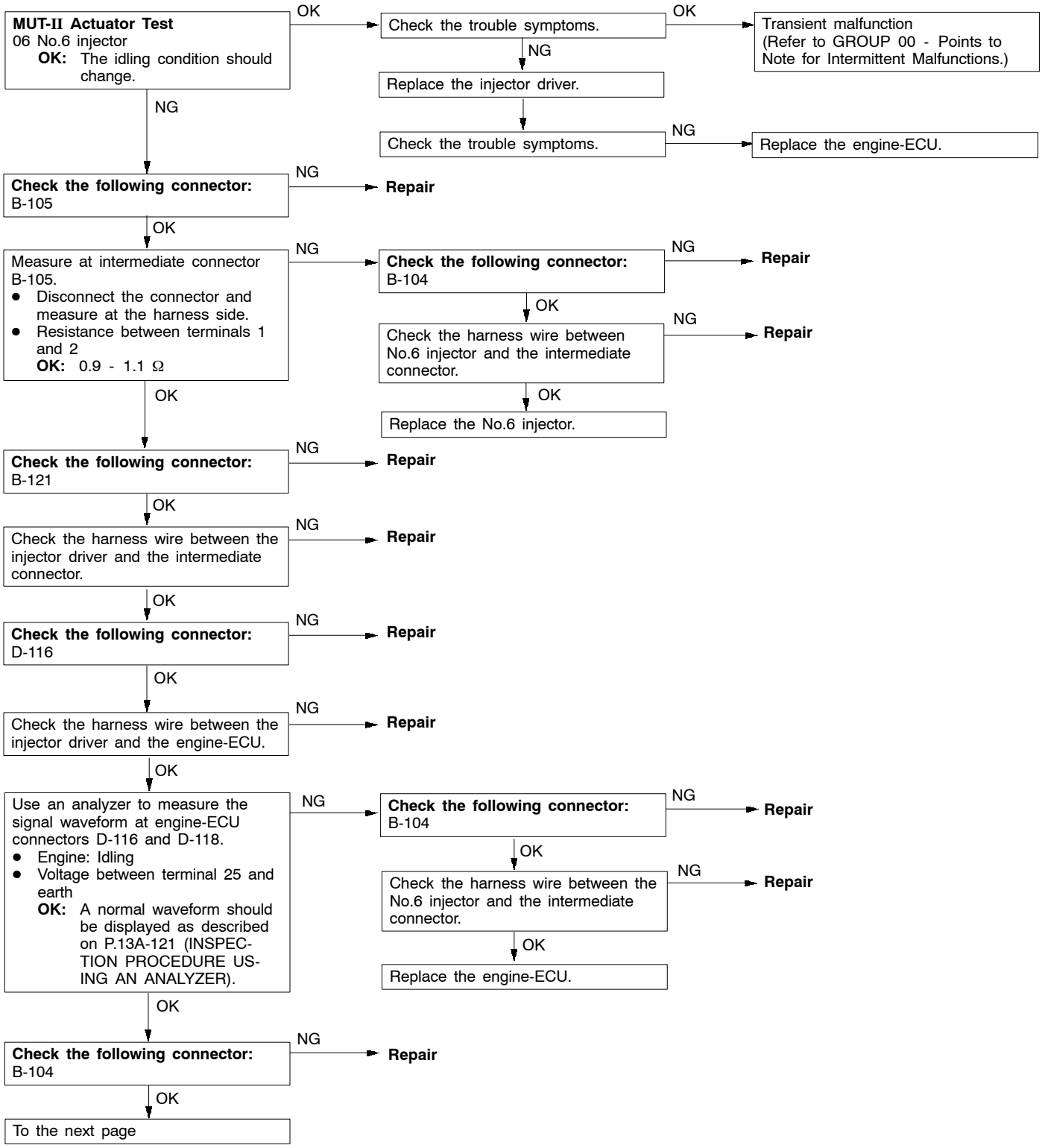


Purchased from www.WorkshopManuals.co.uk

www.WorkshopManuals.co.uk

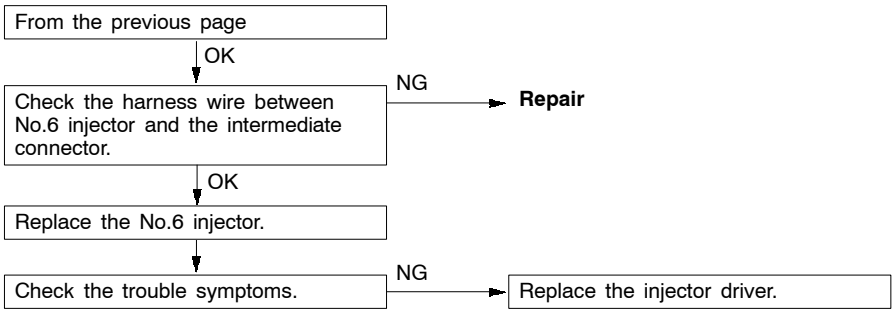


Purchased from www.WorkshopManuals.co.uk

www.WorkshopManuals.co.uk

| Code No.P0220 Accelerator pedal position sensor (1st channel) system | Probable cause |
|---|---|
| Range of Check<br>● Accelerator pedal position sensor (2nd channel) is normal.<br>● Communication between the engine-ECU and the throttle valve controller is normal.<br>Set Conditions<br>● The output voltage of accelerator pedal position sensor (1st channel) is 0.2 V or less for one second.<br>or<br>● The output voltage of accelerator pedal position sensor (2nd channel) is 2.5 V or less, and that of accelerator pedal position sensor (1st channel) is 4.5 V or more for one second<br>or<br>● The difference between accelerator pedal position sensor (1st channel) and accelerator pedal position sensor (2nd channel) output voltages is 1.0 V or more (i.e. the throttle opening angle changes slightly).<br>or<br>● The output voltage of accelerator pedal position sensor (1st channel) is 1.1 V or more for one second when the accelerator pedal position switch is turned on. | ● Malfunction of accelerator pedal position sensor (1st channel)<br>● Open or short circuit in the accelerator pedal position sensor (1st channel) circuit or loose connector contact<br>● Accelerator pedal position switch seized ON<br>● Malfunction of throttle valve controller<br>● Malfunction of engine-ECU |

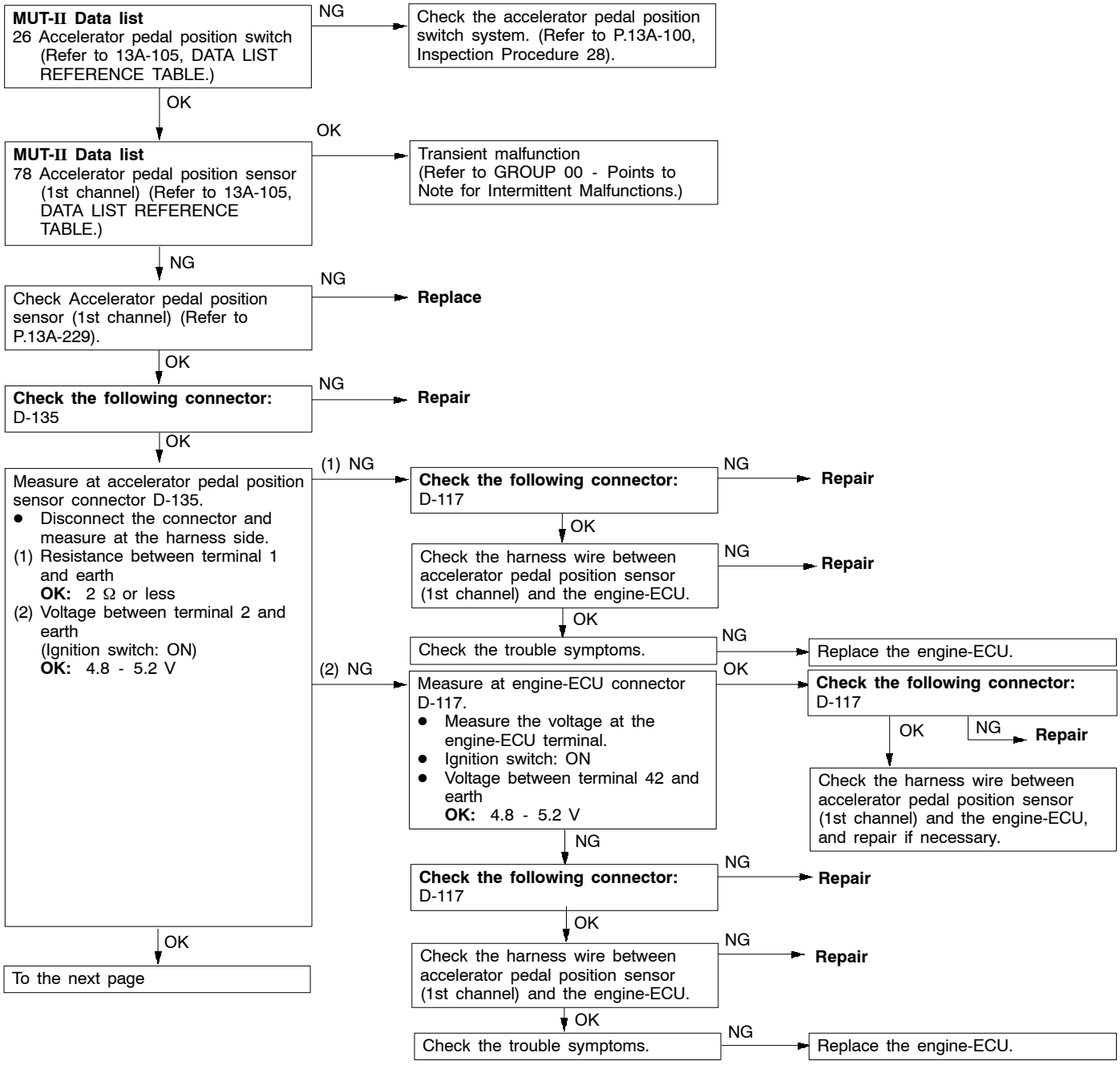


Purchased from www.WorkshopManuals.co.uk

www.WorkshopManuals.co.uk

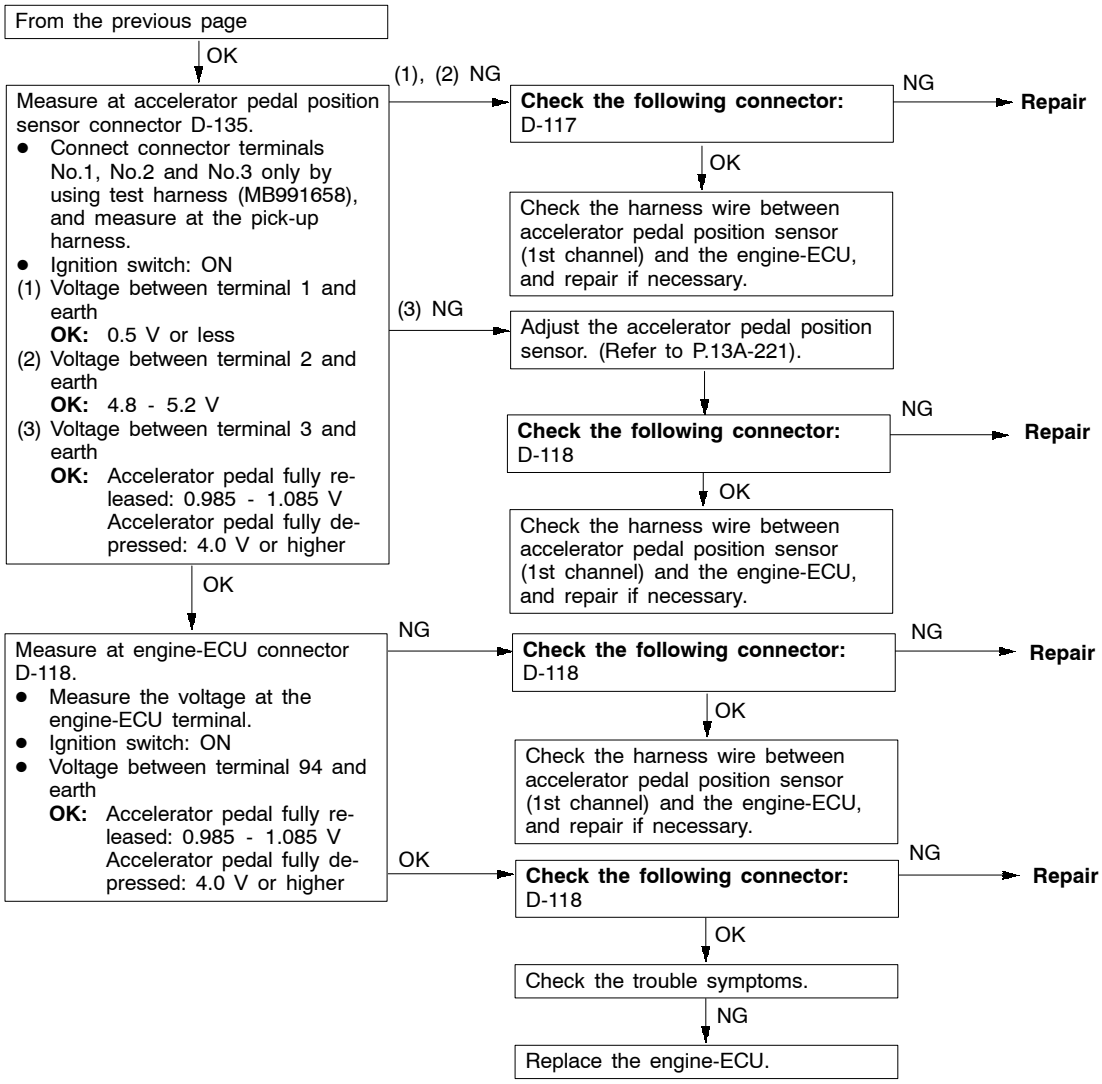


Purchased from www.WorkshopManuals.co.uk

www.WorkshopManuals.co.uk

| Code No.0225 Throttle position sensor (2nd channel) system | Probable cause |
|---|---|
| The throttle valve controller judges a malfunction, and then transmit the result to the engine-ECU.<br>Range of Check<br>● Ignition switch: ON<br>● The throttle position sensor (1st channel) is normal.<br>Set Conditions<br>● The sensor output voltage is 0.2 V or less for four seconds.<br>or<br>● The sensor output voltage is 4.85 V or more for four seconds, and the output voltage of the throttle position sensor (1st channel) is 1.2 V or more.<br>or<br>● The throttle position sensor (1st channel) and throttle position sensor (2nd channel) combination output voltage is outside 4 - 6 V. | ● Malfunction of throttle position sensor (2nd channel)<br>● Open or short circuit in the throttle position sensor (2nd channel) circuit or loose connector contact<br>● Malfunction of the throttle valve controller<br>● Malfunction of the engine-ECU |

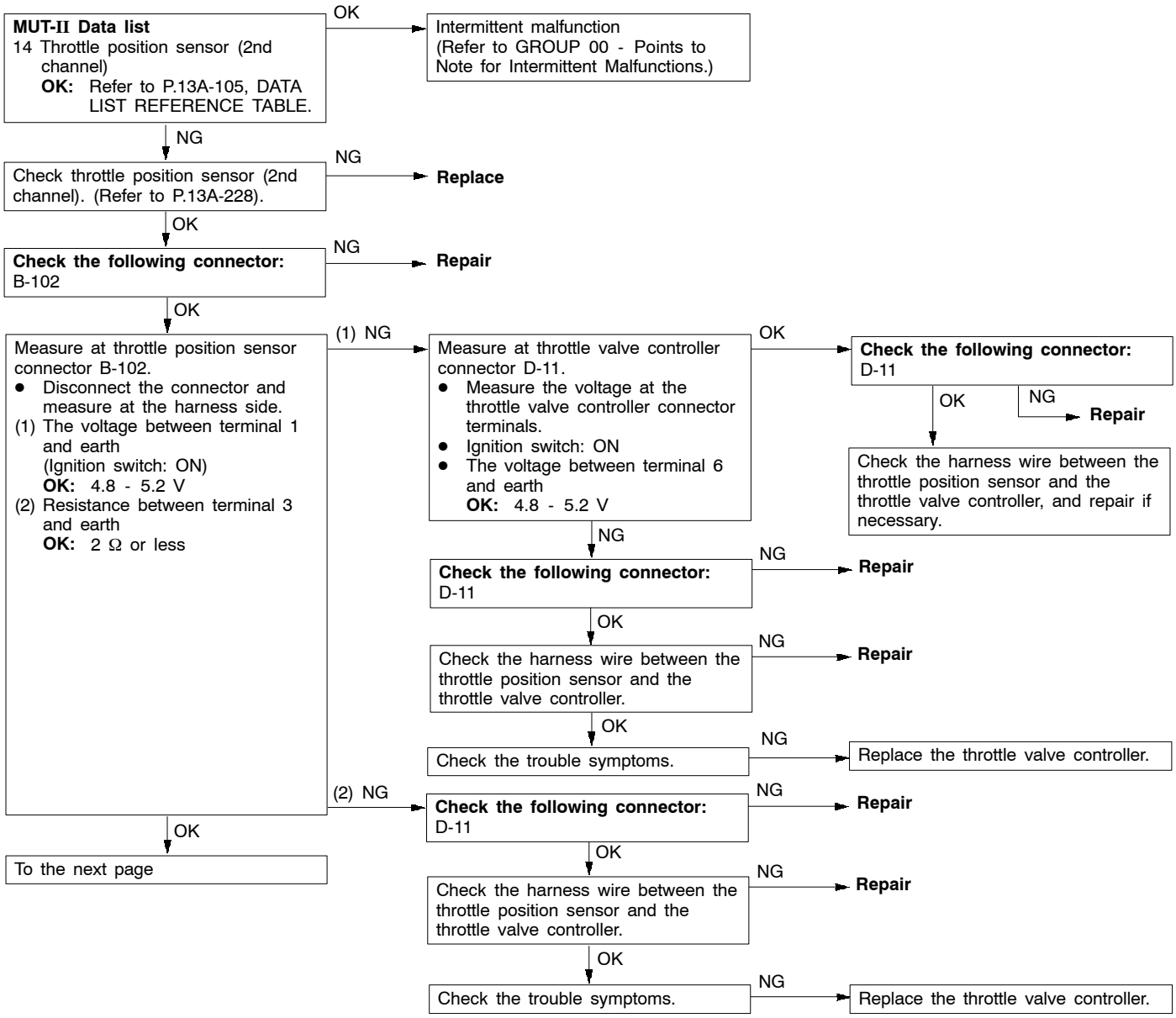


Purchased from www.WorkshopManuals.co.uk

www.WorkshopManuals.co.uk

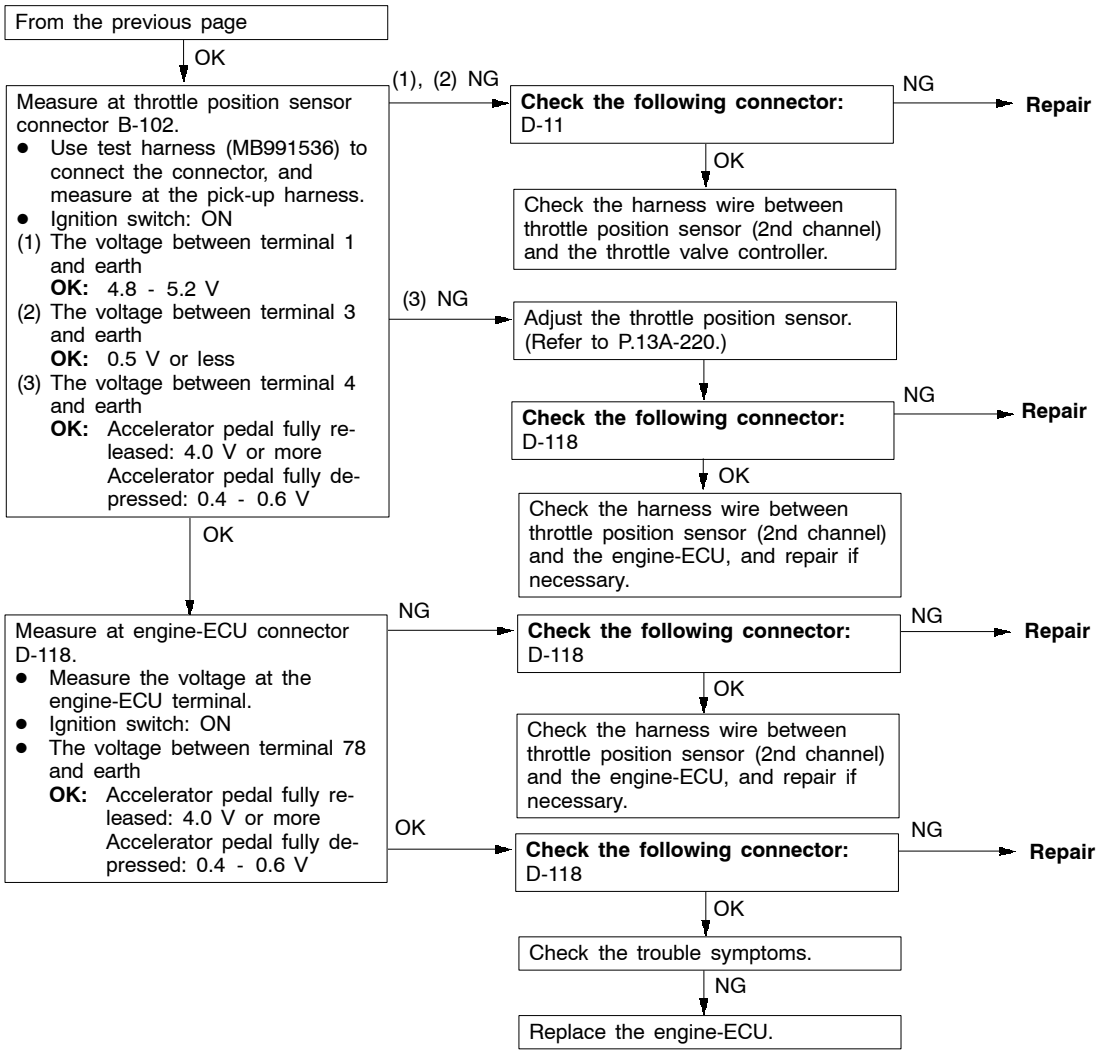


| Code No.P0300 Ignition coil (power transistor) system | Probable cause |
|---|---|
| Range of Check<br>● Engine speed is approx. 50 - 4,000 r/min.<br>● Engine is not cranking.<br>Set Conditions<br>● The ignition failure sensor does not send a signal about a certain cylinder for four seconds. | ● Malfunction of the ignition coil<br>● Malfunction of the ignition failure sensor<br>● Malfunction of spark plug<br>● Open or short circuit in the primary ignition circuit or loose connector contact<br>● Malfunction of engine-ECU |

Purchased from www.WorkshopManuals.co.uk

www.WorkshopManuals.co.uk

**MUT-II Actuator Test**
01 No.1 injector
02 No.2 injector
03 No.3 injector
04 No.4 injector
05 No.5 injector
06 No.6 injector
**OK:** The idling condition should change.
Reference
When the cylinder (defective cylinder) where idling condition does not change is detected after suspending the injector, go to (1) and inspect the spark plug, the ignition coil, the connector, and the harness of the defective cylinder. (When more than one cylinder are detected, inspect all of them.)
When all the cylinders are OK, go to (2).

(1) → **Check the following connectors:** B-107 and the ignition coil connectors, which correspond to defective cylinders (B-101, B-108, B-112, B-113, B-116, B-119).
- NG → **Repair**
- OK ↓

Check the harness wire between the ignition coil connector for a defective cylinder and the intermediate connector.
- NG → **Repair**
- OK ↓

Check the spark plug and the ignition coil for a defective cylinder. (Refer to GROUP 16 - Ignition System.)
- NG → **Replace**
- OK ↓

**Check the following connector:** D-116
- NG → **Repair**
- OK ↓

Check the harness wire between the engine-ECU and the intermediate connector.
- NG → **Repair**
- OK ↓

Use an analyzer to measure the signal waveform at engine-ECU connector D-116.
- Engine: Idling
- The voltage between the ignition coil primary signal terminal for a defective cylinder and earth

**OK:** A normal waveform should be displayed as described on P.13A-122 (Inspection Procedure Using an Analyzer).

- OK ↓ Repair the ignition coil assembly for a defective cylinder and the spark plug.
- NG ↓ Replace the engine-ECU.

(2) ↓

Use an analyzer to measure the signal waveform at the ignition failure sensor connector B-04.
- Use test harness (MB991536) to connect the connector, and measure at the pick-up harness.
- Engine: Idling
- The voltage between terminal 2 and earth

**OK:** A normal waveform should be displayed as described on P.13A-122 (INSPECTION PROCEDURE USING AN ANALYZER).

Reference
When a normal waveform is displayed, compare it with that of the ignition coil primary signal at the engine-ECU terminal to determine the cylinder (defective cylinder) with an abnormal waveform.
→When one or more cylinders are abnormal, go to (1)
→When all of the cylinders are abnormal, go to (3)
→When a normal waveform is displayed, go to (4).

(1) → (1)

(3) → **Check the following connectors:** B-04, D-117
- NG → **Repair**
- OK ↓

Check the harness wires between the ignition failure sensor and the engine-ECU, and between the ignition failure sensor and earth.
- NG → **Repair**
- OK ↓

Repair the ignition failure sensor ↓

Check the trouble symptoms.
- NG → Replace the engine-ECU.

(4) → Check the trouble symptoms.
- OK → Intermittent malfunction (Refer to GROUP 00 - Points to Note for Intermittent Malfunctions.)
- NG ↓ Check the spark plug and the ignition coil for a defective cylinder.(Refer to GROUP16 - Ignition System.)

Purchased from www.WorkshopManuals.co.uk

www.WorkshopManuals.co.uk

| Code No.P0301 No.1 cylinder misfire detected.<br>Code No.P0302 No.2 cylinder misfire detected.<br>Code No.P0303 No.3 cylinder misfire detected.<br>Code No.P0304 No.4 cylinder misfire detected.<br>Code No.P0305 No.5 cylinder misfire detected. | Probable cause |
|---|---|
| Range of Check<br>● The engine speed is 500 - 4,500 r/min.<br>● While the engine is running except deceleration and sudden acceleration.<br>Set Conditions<br>● The number of misfires exceeds a predetermined number per 200 engine revolutions (Misfire has occurred in only one cylinder).<br>or<br>● The number of misfires exceeds a predetermined number per 100 engine revolutions (Misfire has occurred in only one cylinder). | ● Malfunction of the ignition system<br>● Abnormal compression<br>● Malfunction of injector<br>● Malfunction of engine-ECU |

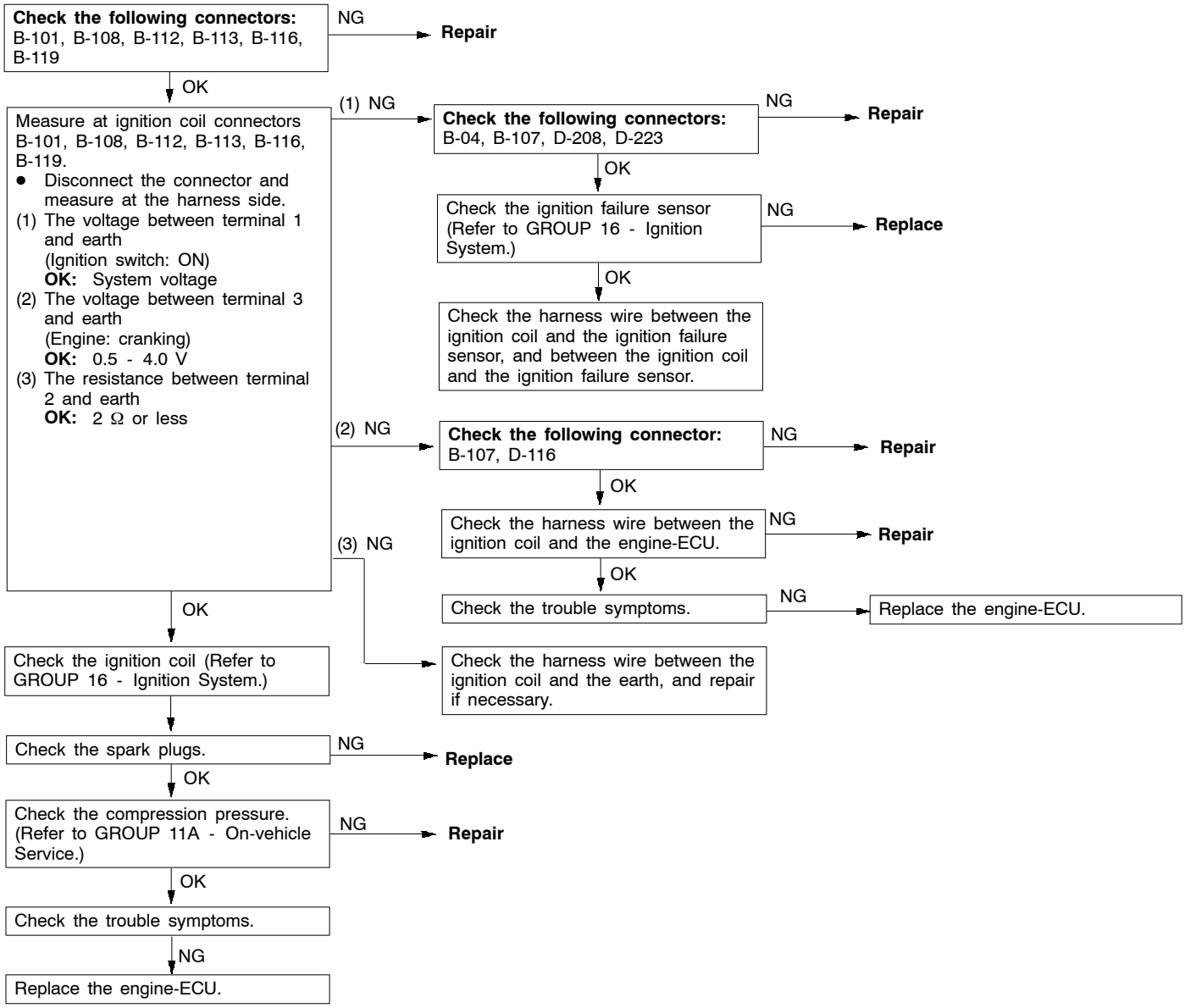


Purchased from www.WorkshopManuals.co.uk

www.WorkshopManuals.co.uk

| Code No.P0325 Detonation sensor system | Probable cause |
|---|---|
| Range of Check<br>● Engine: Two seconds after the engine has been started<br>Set Conditions<br>● Changes in sensor output voltage (detonation sensor peak voltage per 1/3 crankshaft rotation) in 200 consecutive cycles are 0.08 V or less. | ● Malfunction of the detonation sensor<br>● Open or short circuit in the detonation sensor circuit or loose connector contact<br>● Malfunction of engine-ECU |

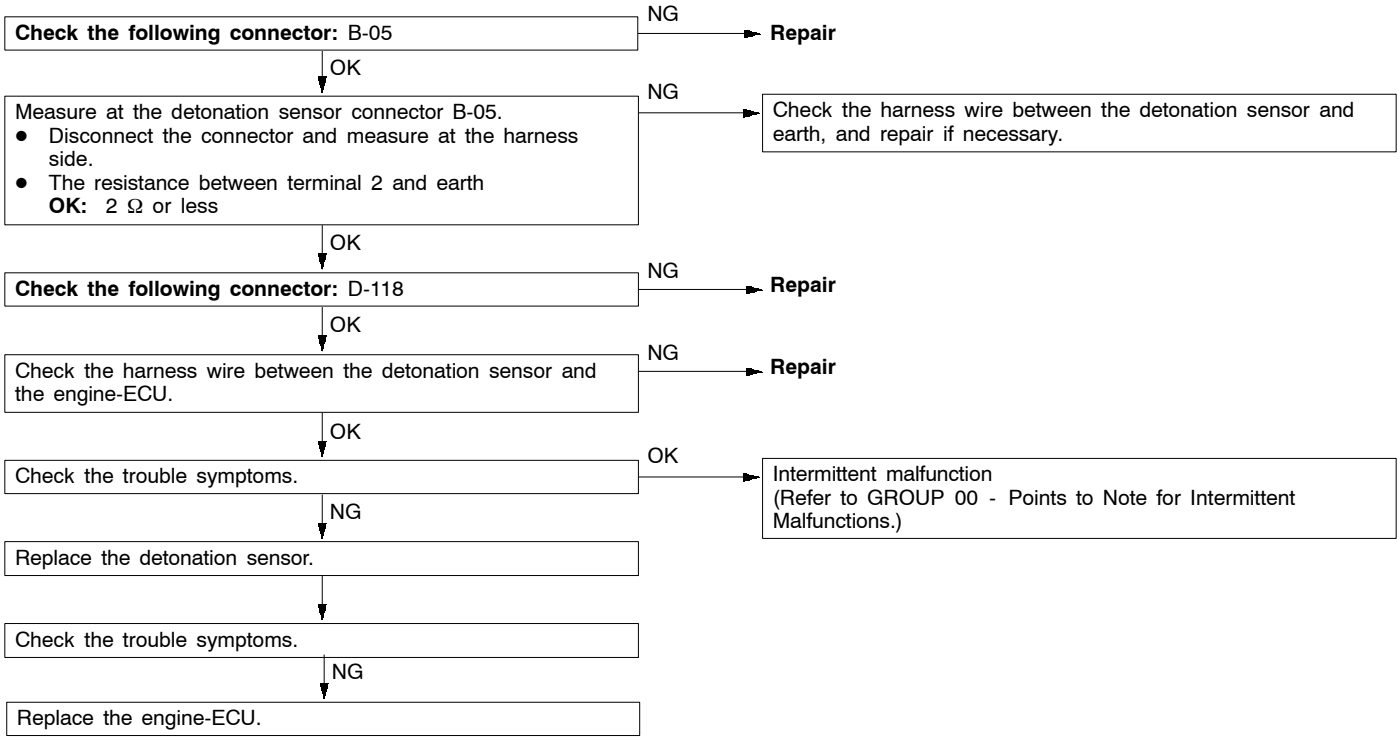


| Code No.P0335 Crank angle sensor system | Probable cause |
|---|---|
| Range of Check<br>● Engine is cranking<br>Set Conditions<br>● Sensor output voltage does not change for 4 seconds (no pulse signal input). | ● Malfunction of the crank angle sensor.<br>● Open or short circuit in the crank angle sensor circuit or loose connector contact.<br>● Malfunction of engine-ECU |

Purchased from www.WorkshopManuals.co.uk

www.WorkshopManuals.co.uk

**MUT-II Data list**
22 Crank angle sensor
**OK:** Refer to P.13A-105, DATA LIST REFERENCE TABLE.

OK → Intermittent malfunction (Refer to GROUP 00 - Points to Note for Intermittent Malfunctions.)

NG ↓

**Check the following connector:**
B-52

NG → **Repair**

OK ↓

Measure at the crank angle sensor connector B-52.
- Disconnect the connector and measure at the harness side.

(1) The resistance between terminal 1 and earth
**OK:** 2 Ω or less
(2) The voltage between terminal 2 and earth
(Ignition switch: ON)
**OK:** 4.8 - 5.2 V
(3) The voltage between terminal 3 and earth
(Ignition switch: ON)
**OK:** System voltage

(1) NG → Check the harness between the crank angle sensor and earth, and repair if necessary.

(2) NG → Measure at engine-ECU connector D-117.
- Measure the voltage at the engine-ECU terminal.
- Disconnect the connector B-52
- Ignition switch: ON
- The voltage between terminal 43 and earth.

**OK:** 4.8 - 5.2 V

OK → **Check the following connector**: D-117
OK → Check the harness wire between the crank angle sensor and the engine-ECU, and repair if necessary.
NG → **Repair**

NG ↓

**Check the following connector:**
D-117

NG → **Repair**

OK ↓

Check the harness wire between the crank angle sensor and the engine-ECU.

NG → **Repair**

OK ↓

Check the trouble symptoms.

NG → Replace the engine-ECU.

(3) NG → **Check the following connector:**
B-25X

NG → **Repair**

OK ↓

Check the harness wire between the crank angle sensor and the engine control relay, and repair if necessary.

OK ↓

Use an analyzer to measure the output waveform at the crank angle sensor connector B-52.
- Use the test harness (MD998478) to connect the connector, and measure at the pickup harness side.
- Engine: Idling
- The voltage between terminal 2 and earth

**OK:** A normal waveform should be displayed as described on P.13A-119 (Inspection Procedure Using an Analyzer). Its maximum value should be 4.8 V or more, and its minimum value should be 0.6 V or less with no noise in waveform.

NG → Check the crank angle sensor vane

NG → **Replace**

OK ↓

Replace the crank angle sensor

Check the trouble symptoms.

NG ↓

**Check the following connectors:**
B-25X, D-117

NG → **Repair**

OK ↓

Check the harness wires between the crank angle sensor and the engine-ECU, crank angle sensor and the engine control relay, and the crank angle sensor and earth. Then, repair if necessary.

OK ↓

Check the trouble symptoms.

NG ↓

Replace the engine-ECU.

Purchased from www.WorkshopManuals.co.uk

www.WorkshopManuals.co.uk

| Code No.P0340 Camshaft position sensor system | Probable cause |
|---|---|
| Range of Check<br>● After the engine was started<br>Set Conditions<br>● The sensor output voltage does not change for 4 seconds (no pulse signal input). | ● Malfunction of the camshaft position sensor<br>● Open or short circuit in the camshaft position sensor circuit or loose connector contact.<br>● Malfunction of engine-ECU |

Purchased from www.WorkshopManuals.co.uk

www.WorkshopManuals.co.uk

**Check the following connector:**
B-110

NG → **Repair**

OK ↓

Measure at intermediate connector B-110
- Disconnect the connector and measure at the harness side.

(1) The voltage between terminal 1 and earth
(Ignition switch: ON)
**OK:** System voltage

(2) The voltage between terminal 2 and earth
(Ignition switch: ON)
**OK:** 4.8 - 5.2 V

(3) The resistance between terminal 3 and earth
**OK:** 2 Ω or less

(1) NG → **Check the following connector:**
B-25X

NG → **Repair**

OK ↓

Check the harness wire between the intermediate connector and the engine control relay, and repair if necessary.

(2) NG → Measure at engine-ECU connector D-117.
- Measure the voltage at the engine-ECU terminal.
- Disconnect connector B-110.
- Ignition switch: ON
- The voltage between terminal 50 and earth
**OK:** 4.8 - 5.2 V

OK → **Check the following connector**:
D-117

OK ↓ / NG → **Repair**

Check the harness wire between the intermediate connector and the engine-ECU, and repair if necessary.

NG ↓

**Check the following connector:**
D-117

NG → **Repair**

OK ↓

Check the harness wire between the intermediate connector and the engine-ECU.

NG → **Repair**

OK ↓

Check the trouble symptoms.

NG → Replace the engine-ECU.

(3) NG → Check the harness wire between the intermediate connector and earth, and repair if necessary.

OK ↓

Use an analyzer to measure the output waveform at intermediate connector B-110.
- Use test harness (MB991658) to connect the connector, and measure at the pick-up harness.
- Engine: Idling
- The voltage between terminal 2 and earth
**OK:** A normal waveform should be displayed as described on P.13A-119 (Inspection Procedure Using an Analyzer), its maximum value should be 4.8 V or more, and its minimum value should be 0.6 V or less with no noise in waveform.

(1) NG → **Check the following connector:**
B-109

NG → **Repair**

OK ↓

Check the harness wire between the camshaft position sensor and the intermediate connector.

NG → **Repair**

OK ↓

Replace the camshaft position sensor

Check the trouble symptoms.

NG ↓

Check the camshaft position sensing cylinder

NG → **Replace**

OK ↓

**Check the following connectors:**
B-25X, D-117

NG → **Repair**

OK ↓

Check the harness wires between the intermediate connector and the engine-ECU, the intermediate connector and the engine control relay, and the intermediate connector and earth. Then, repair if necessary.

OK ↓

Check the trouble symptoms.

OK → Intermittent malfunction
(Refer to GROUP 00 - Points to Note for Intermittent Malfunctions.)

NG ↓

Replace the engine-ECU.

Purchased from www.WorkshopManuals.co.uk

www.WorkshopManuals.co.uk

| Code No.P0403 EGR valve system | Probable cause |
|---|---|
| Range of Check<br>● Ignition switch: OFF to ON<br>● EGR valve is in operation after the engine starting process is complete.<br>Set Conditions<br>● Off-surge voltage is not generated from the motor coil while the EGR valve control motor is running. | ● Malfunction of the EGR valve<br>● Open or short circuit in the EGR valve circuit or loose connector contact<br>● Malfunction of engine-ECU |

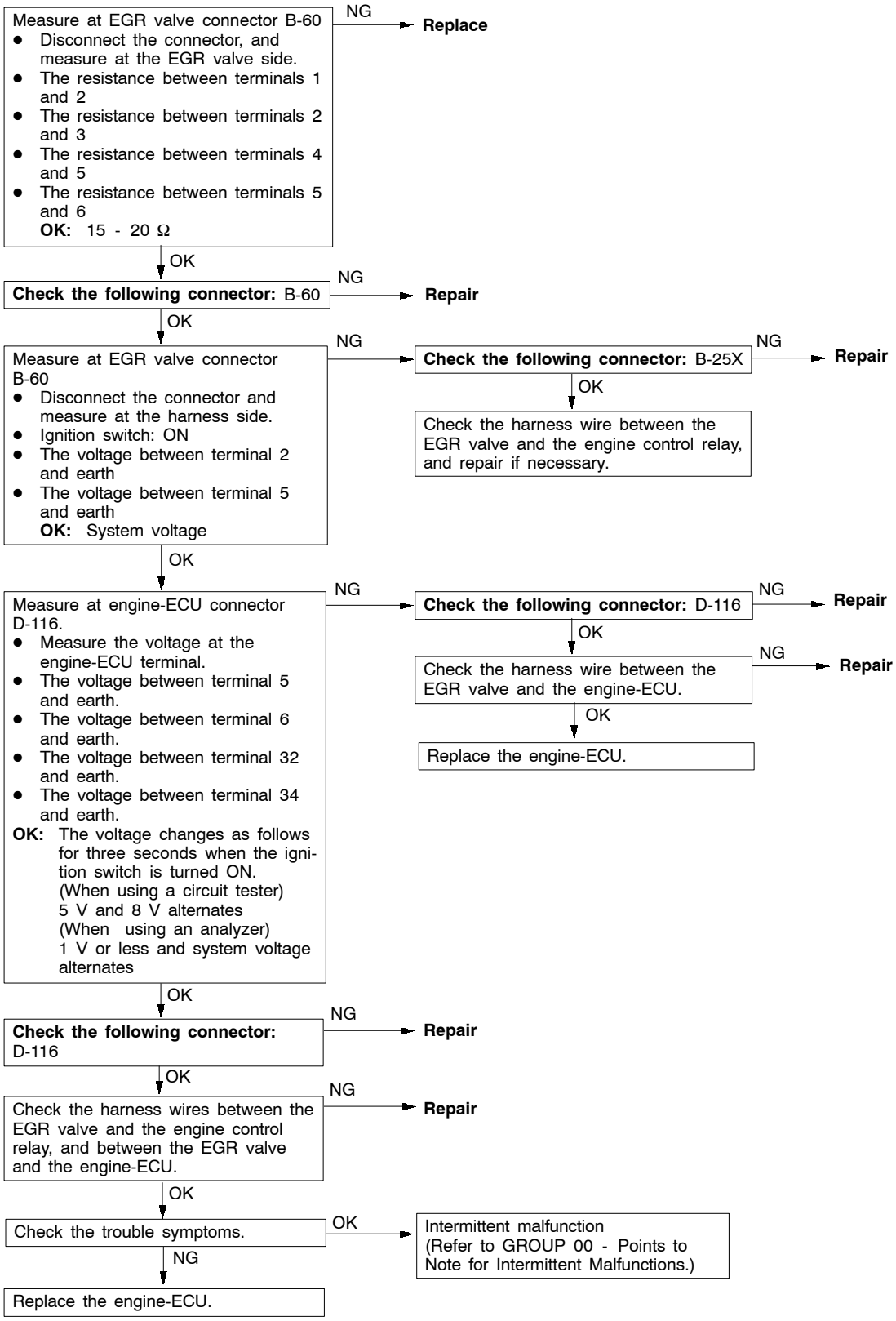


Purchased from www.WorkshopManuals.co.uk

www.WorkshopManuals.co.uk

| Code No.P0420 Catalyst malfunction | Probable cause |
|---|---|
| Range of Check<br>● The engine speed is 3,000 r/min or less.<br>● During driving<br>● During air/fuel ratio feedback control<br>Set Conditions<br>● The ratio between the oxygen sensor (rear) and the oxygen sensor (front) output frequencies reaches 0.8 per 12 seconds on average. | ● Malfunction of catalyst<br>● Malfunction of the oxygen sensor (front)<br>● Malfunction of the oxygen sensor (rear)<br>● Malfunction of engine-ECU |

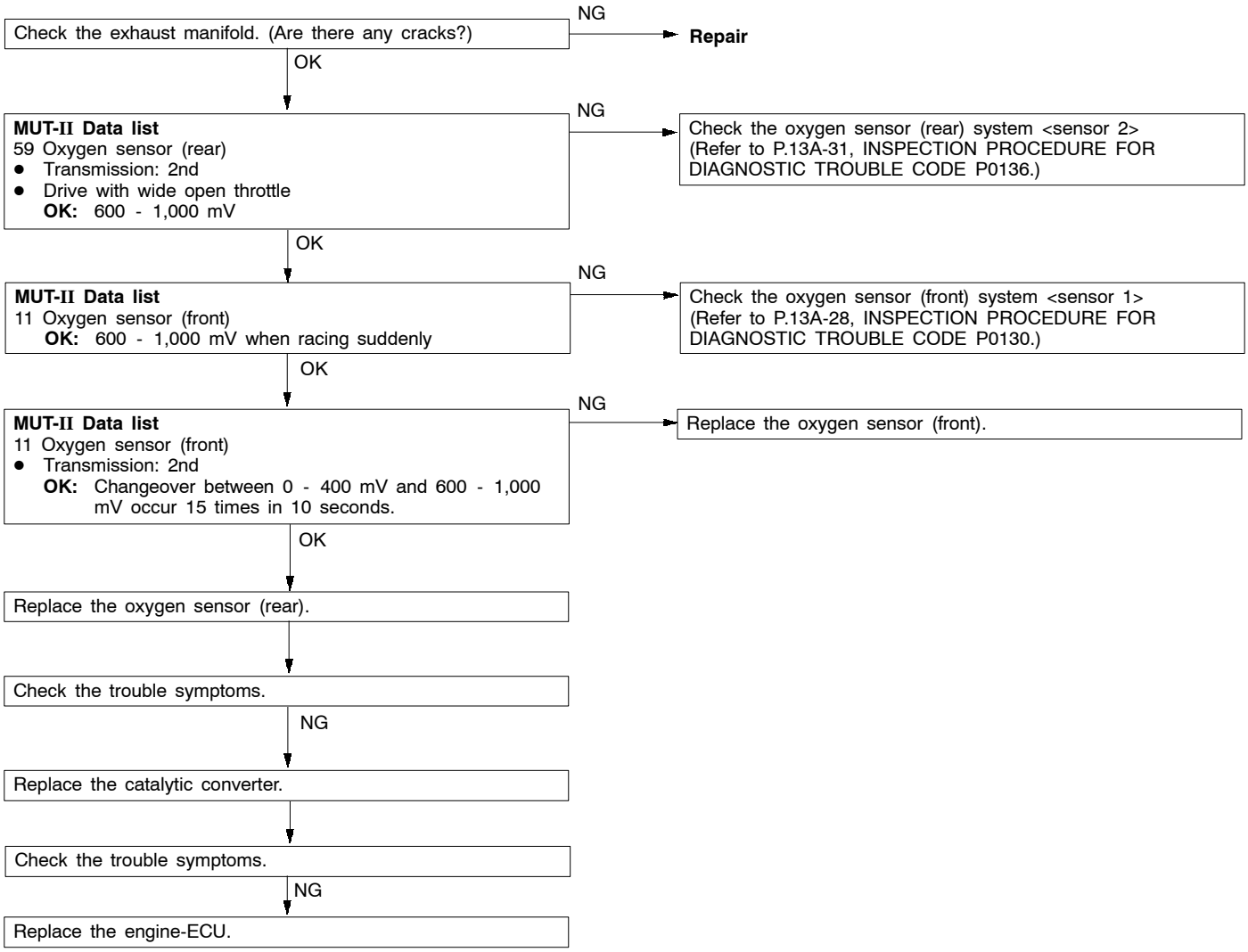


Purchased from www.WorkshopManuals.co.uk

www.WorkshopManuals.co.uk

| Code No.P0443 Purge control solenoid valve system | Probable cause |
|---|---|
| Range of Check<br>● Ignition switch: ON<br>● Battery voltage is 10 V or more.<br>Set Conditions<br>● The solenoid coil surge voltage (battery voltage + 2 V) is not detected when the purge control solenoid valve is turned from on to off. | ● Malfunction of the purge control solenoid valve<br>● Open or short circuit in the purge control solenoid valve circuit or loose connector contact<br>● Malfunction of engine-ECU |

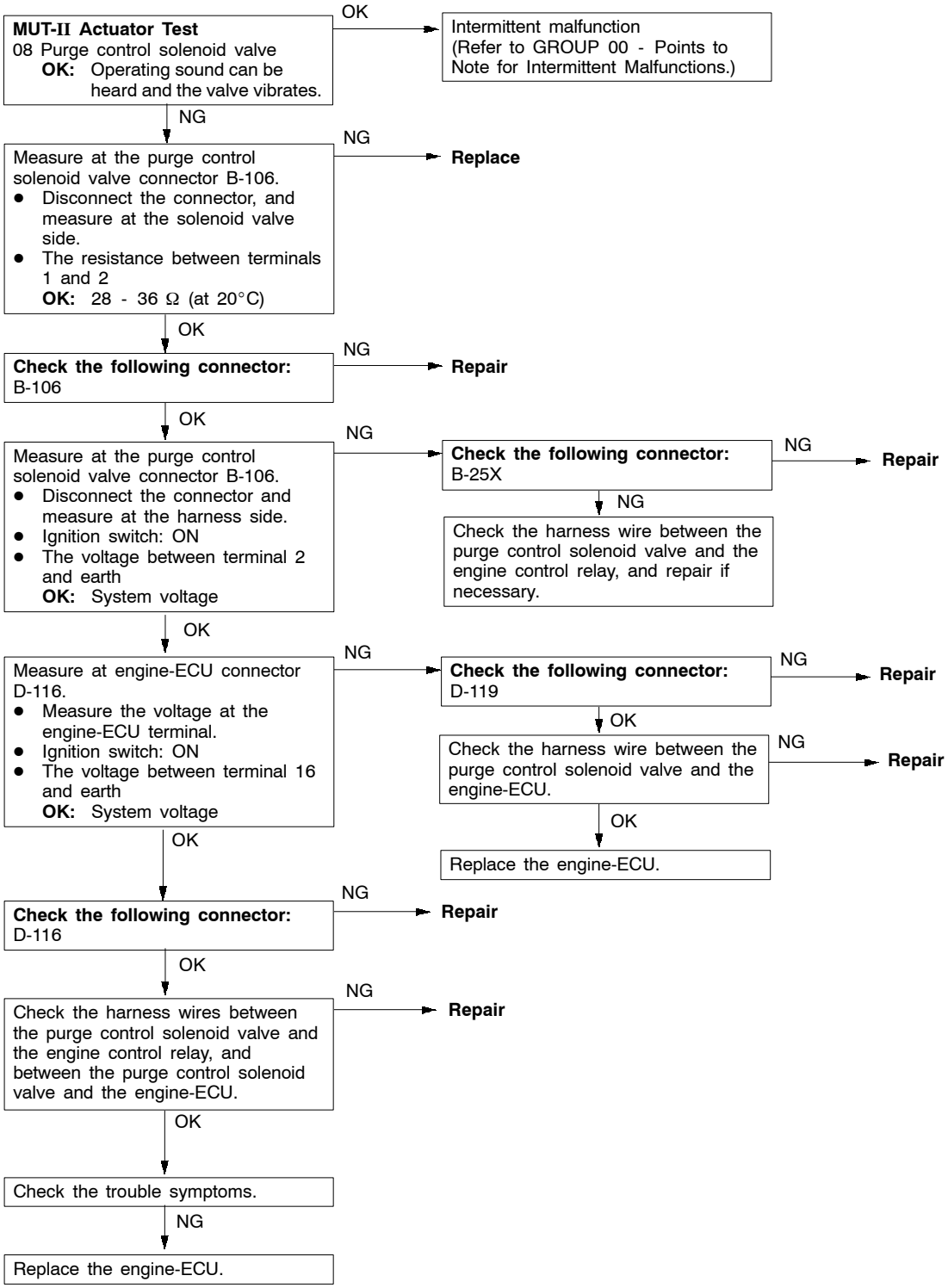


Purchased from www.WorkshopManuals.co.uk

www.WorkshopManuals.co.uk

| Code No.P0500 Vehicle speed sensor system | Probable cause |
|---|---|
| Range of Check<br>● Engine: Two seconds after the engine was started<br>● Idle switch: OFF<br>● Engine speed: 2,500 r/min or more<br>● During high engine load<br>Set Conditions<br>● The sensor output voltage does not change for 4 seconds (no pulse signal input). | ● Malfunction of the vehicle speed sensor<br>● Open or short circuit in the vehicle speed sensor circuit or loose connector contact<br>● Malfunction of engine-ECU |

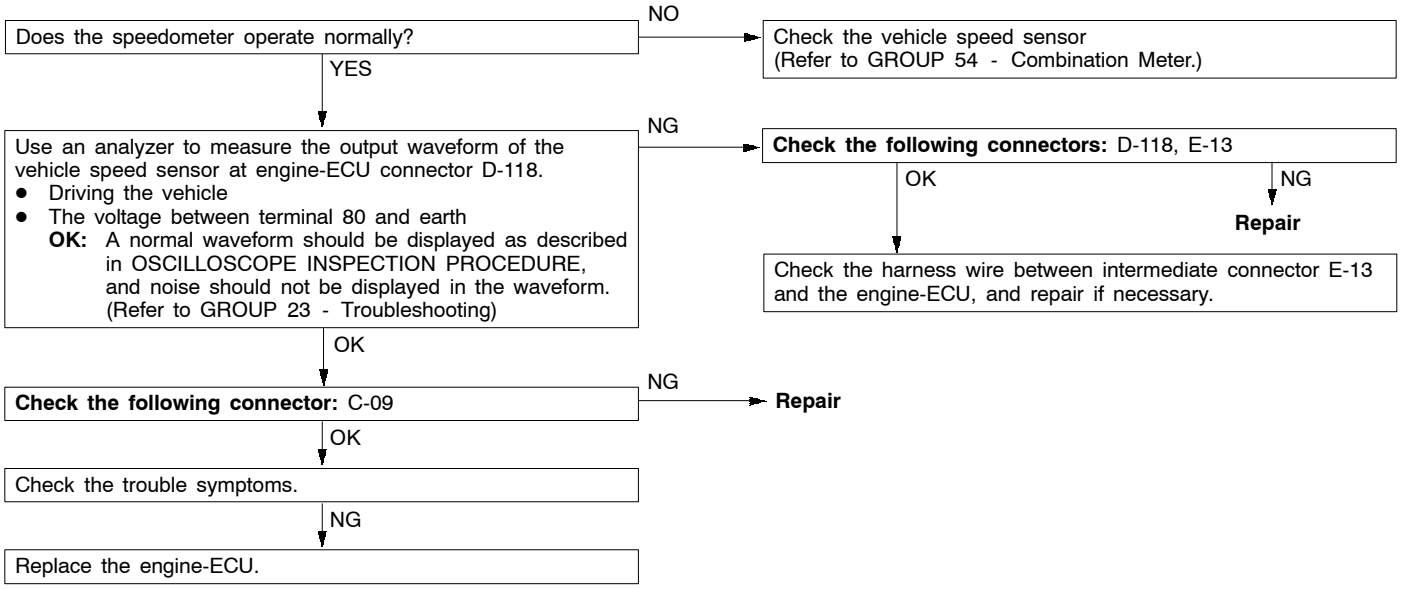


| Code No.P1200 Injector driver system | Probable cause |
|---|---|
| Range of Check<br>● Engine speed: 4,000 r/m or less<br>● Battery voltage: 10 V or more<br>● The fuel cut operation and the injector operation (by carrying out the Actuator test) are not in progress.<br>● During high engine load<br>Set Conditions<br>● Injector open circuit check signal is not output from the injector driver. | ● Malfunction of the injector driver<br>● Open or short circuit, or loose connector contact<br>● Malfunction of engine-ECU |

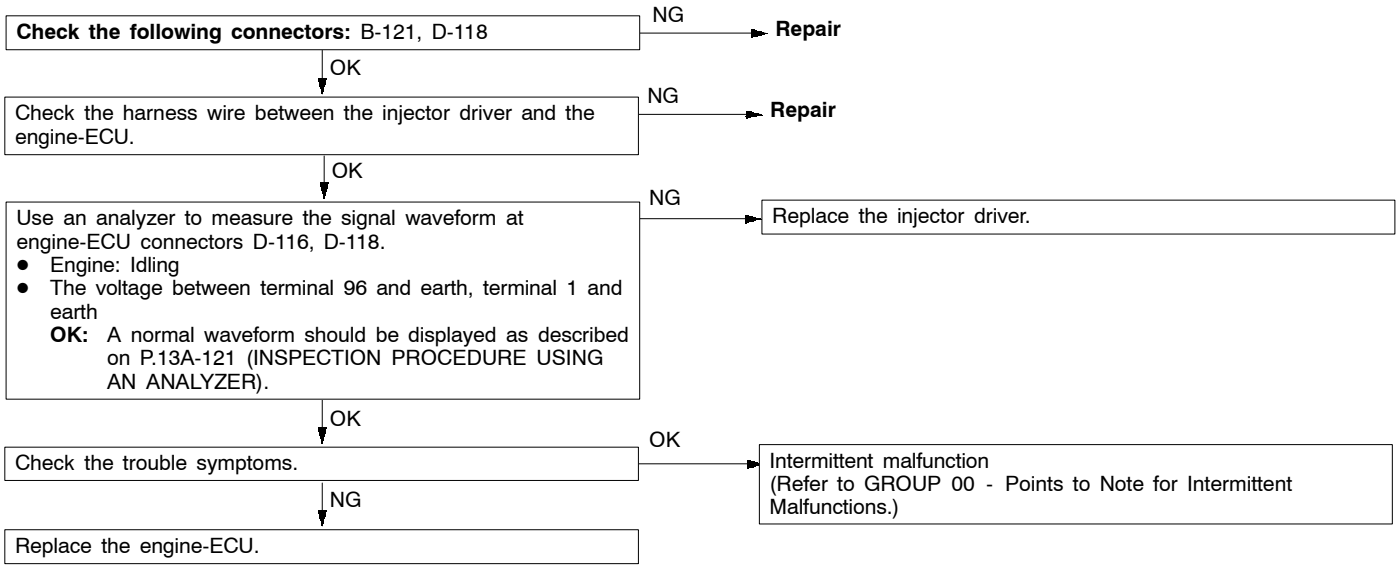


Purchased from www.WorkshopManuals.co.uk

www.WorkshopManuals.co.uk

| Code No.P1220 Electronic-controlled throttle valve system | Probable cause |
|---|---|
| Range of Check<br>● Ignition switch: ON<br>● Error in communication between the engine-ECU and the throttle valve controller<br>Set Conditions<br>● Output voltage of throttle position sensor (2nd channel) fluctuates significantly (approx. 1 V or more) from an expected value, based on that of the accelerator pedal position sensor (2nd channel).<br>Range of Check<br>● Ignition switch: ON<br>● Error in communication between the throttle valve controller and the engine-ECU<br>Set Conditions<br>● The output voltage of the throttle position sensor (2nd channel) is significantly different (approx. 1 V) from the the throttle valve opening angle (voltage), which the engine-ECU request the throttle valve controller. | ● Short in communication line<br>● Malfunction of the engine-ECU<br>● Malfunction of the throttle valve controller |

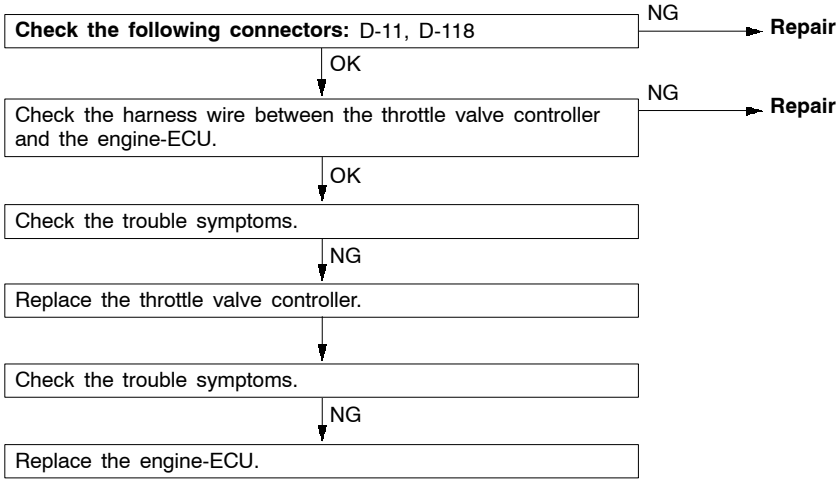


Purchased from www.WorkshopManuals.co.uk

www.WorkshopManuals.co.uk

| Code No.P1221 Throttle valve position feedback system | Probable cause |
|---|---|
| The throttle valve controller judges a malfunction, and then transmit the result to the engine-ECU.<br>Range of Check<br>● Ignition switch: ON<br>● Battery voltage: 10 V or more<br>Set Conditions<br>● Failure in the position feedback<br>(The engine-ECU detects that the current in the motor is excessive and the opening angle difference between the target value of throttle position sensor (1st channel) and the actual value of throttle position sensor (1st channel) is 2.0 V or more) | ● Malfunction of throttle position sensor (1st channel)<br>● Open or short circuit in the throttle position sensor (1st channel) circuit or loose connector contact<br>● Malfunction of the throttle valve controller |

**MUT-II Self-Diag Code**
Is code No.P0120 set?
- YES → Refer to Code No.P0120, Throttle position sensor (1st channel) system (Refer to P.13A-25).
- NO ↓

**MUT-II Self-Diag Code**
Is Code No.P1222 set?
- YES → Refer to Code No.P1222, Throttle valvr control servo system (Refer to P.13A-66.)
- NO ↓

Adjust the throttle position sensor. (Refer to P.13A-220.)
- OK ↓

Check the throttle valve control servo. (Refer to 13A-132.)
- NG → Replace the throttle body assembly.
- OK ↓

**Check the following connectors:** B-102, B-122, D-11
- NG → **Repair**
- NG ↓

Check the harness wires between the throttle position sensor and the throttle valve controller, and between the throttle valve control servo and the throttle valve controller.
- NG → **Repair**
- OK ↓

Check the trouble symptoms.
- NG ↓

Replace the throttle valve controller.

Purchased from www.WorkshopManuals.co.uk

www.WorkshopManuals.co.uk

| Code No.P1222 throttle valve control servo system | Probable cause |
|---|---|
| The throttle valve controller judges a malfunction, and then transmit the result to the engine-ECU.<br>Range of Check<br>● throttle valve control servo relay: ON<br>Set Conditions<br>● Short circuit of the throttle valve control servo drive circuit to earth<br>● Power is supplied to the throttle valve control servo circuit from other sources.<br>● Open circuit in the throttle valve control servo power supply circuit | ● Malfunction of the throttle valve control servo<br>● Open circuit in the throttle valve control servo power supply circuit<br>● Open or short circuit in the throttle valve control servo circuit or loose connector contact<br>● Malfunction of throttle valve controller |

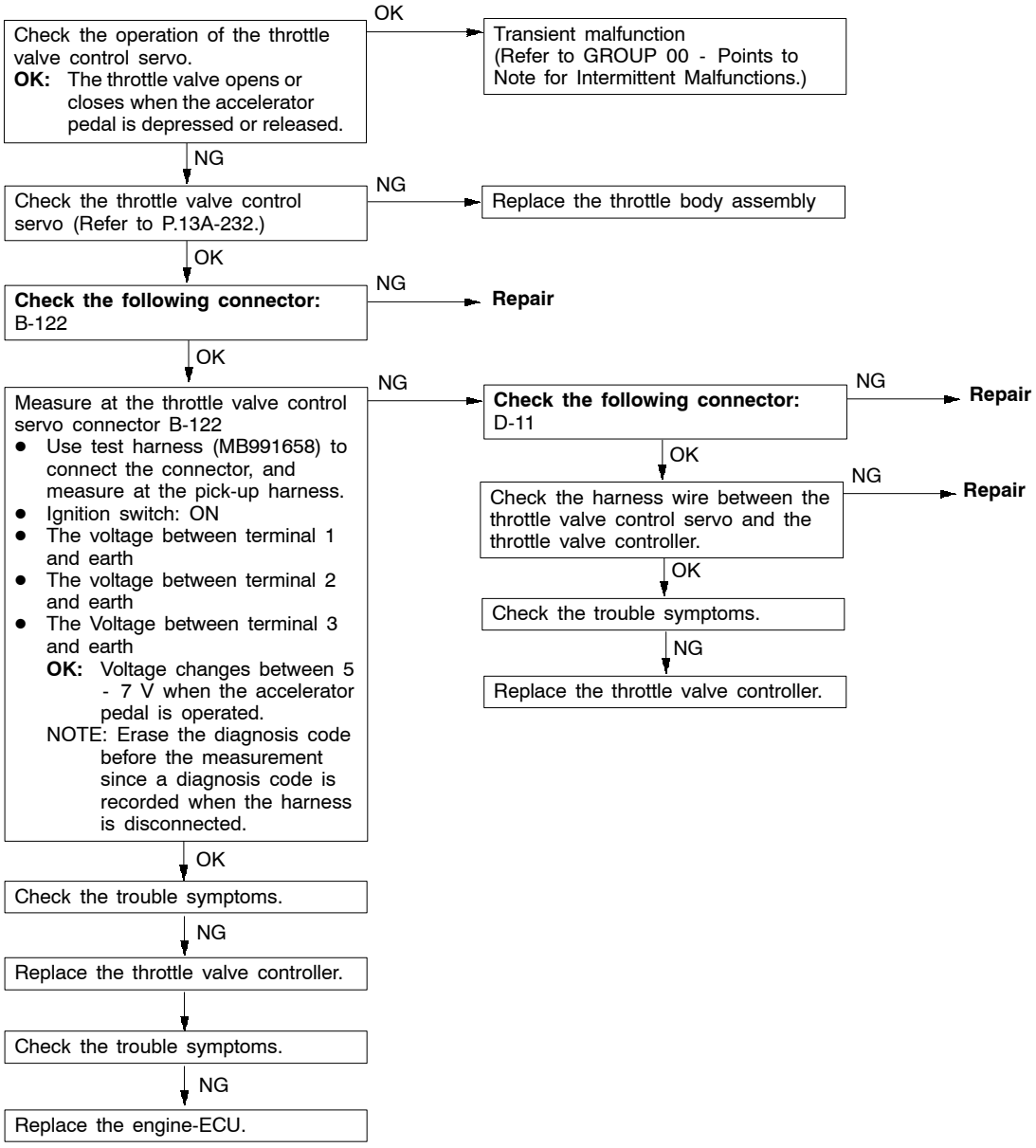


Purchased from www.WorkshopManuals.co.uk

www.WorkshopManuals.co.uk

| Code No.P1223 Communication line system with the throttle valve controller | Probable cause |
|---|---|
| Range of Check<br>● Ignition switch: ON<br>● Battery voltage: 8 V or more.<br>● Engine: not cranking<br>Set Conditions<br>● System detects an error in communication line between the engine-ECU and the throttle valve controller, and between the throttle valve controller and the engine-ECU. | ● Short in communication line<br>● Malfunction of engine-ECU<br>● Malfunction of throttle valve controller |

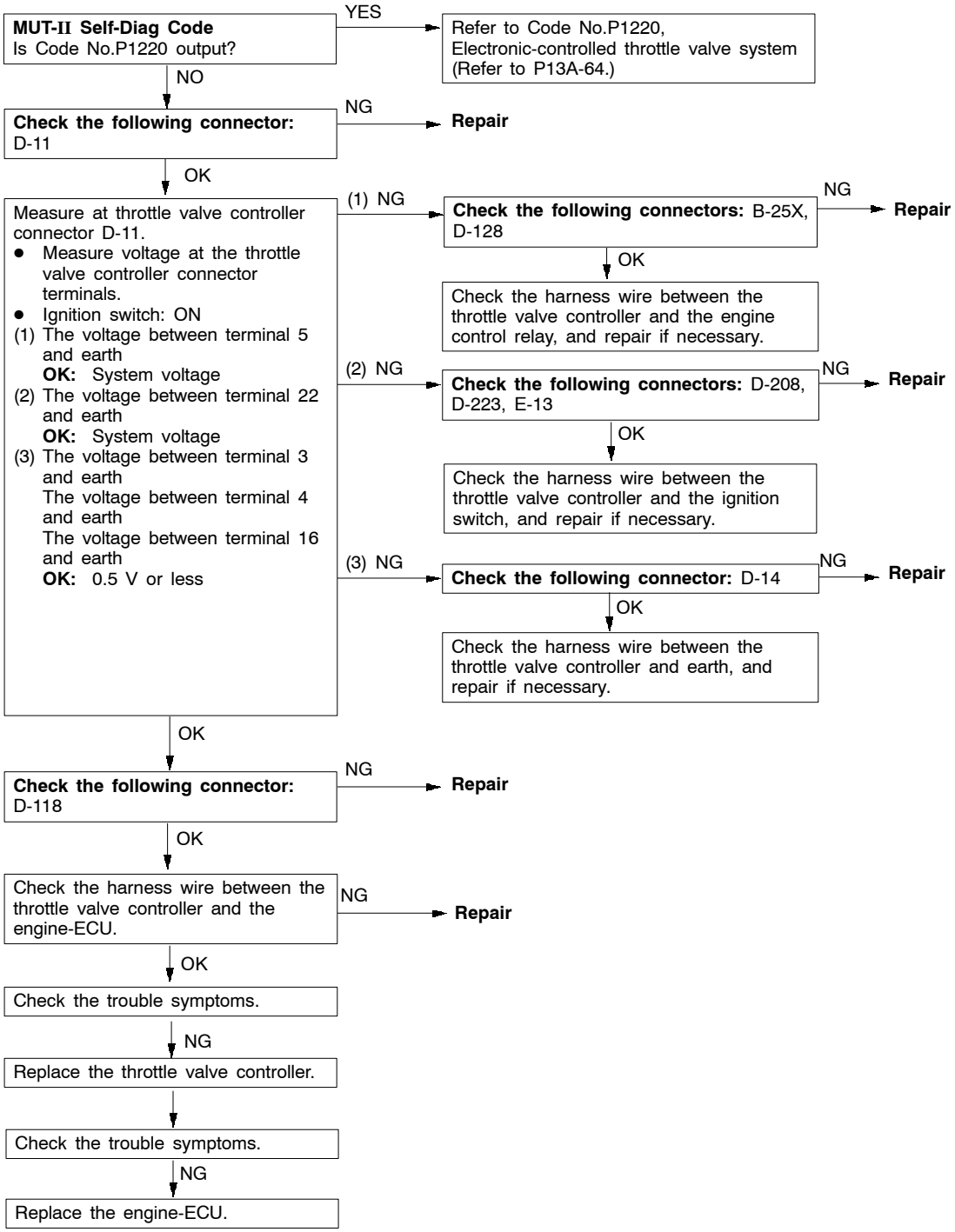


Purchased from www.WorkshopManuals.co.uk

www.WorkshopManuals.co.uk

| Code No.P1225 Accelerator pedal position sensor (2nd channel) system | Probable cause |
|---|---|
| Range of Check<br>● Accelerator pedal position sensor (2nd channel) is normal.<br>● Communication between the engine-ECU and the throttle valve controller is normal.<br>Set Conditions<br>● Output voltage of the accelerator pedal position sensor (2nd channel) is 0.2 V or less for one second<br>or<br>● Output voltage of the accelerator pedal position sensor (1st channel) is 2.5 V or less, and output voltage of the accelerator pedal position sensor (2nd channel) is 4.5 V or more for one second.<br>or<br>● Difference between the accelerator pedal position sensor (1st and 2nd channels) output voltages exceeds 1.0 V (i.e. when the throttle valve opening angle changes slightly). | ● Malfunction of accelerator pedal position sensor (2nd channel)<br>● Open or short circuit in accelerator pedal position sensor (2nd channel) circuit or loose connector contact<br>● Malfunction of the throttle valve controller<br>● Malfunction of engine-ECU |

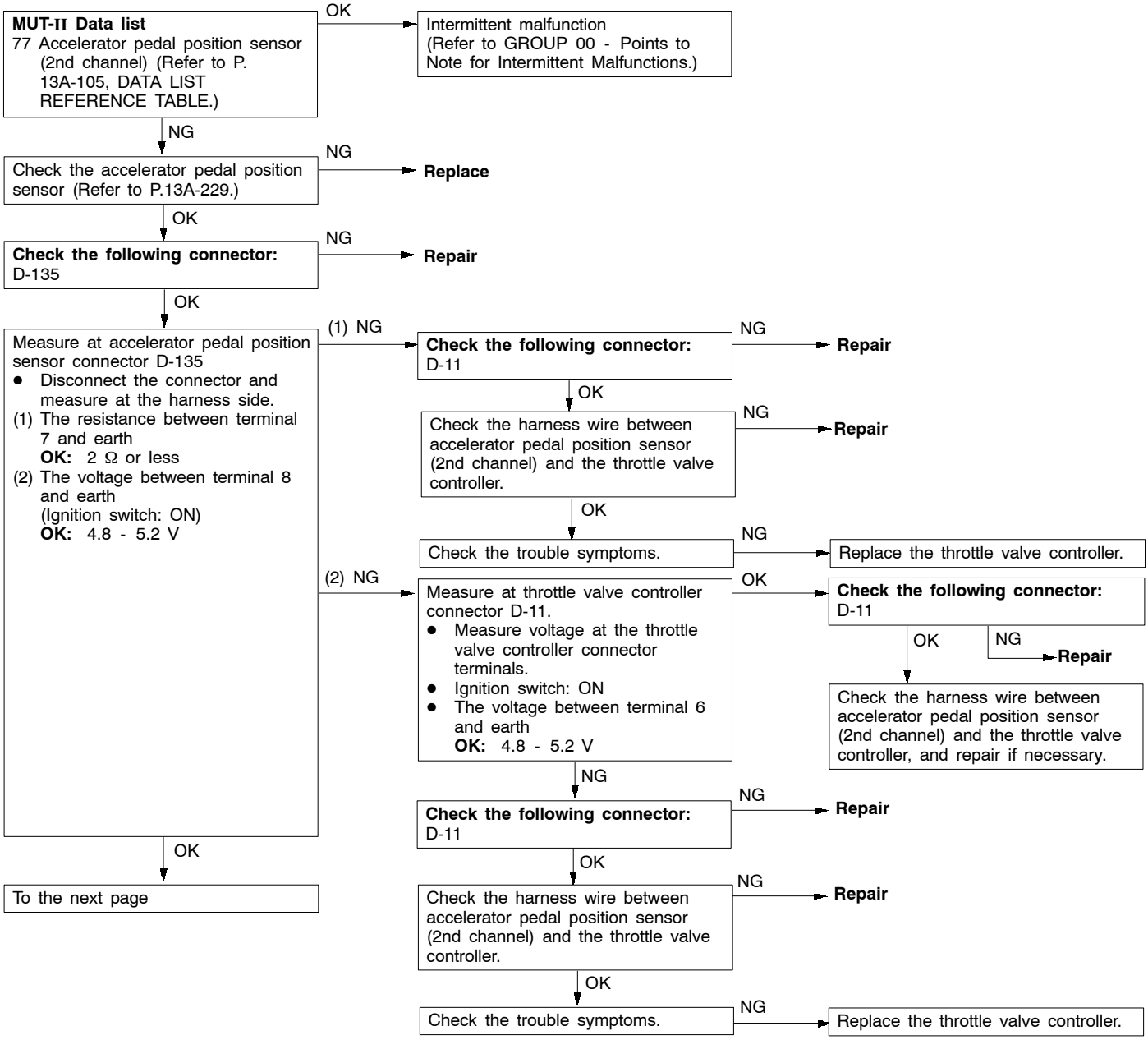


Purchased from www.WorkshopManuals.co.uk

www.WorkshopManuals.co.uk

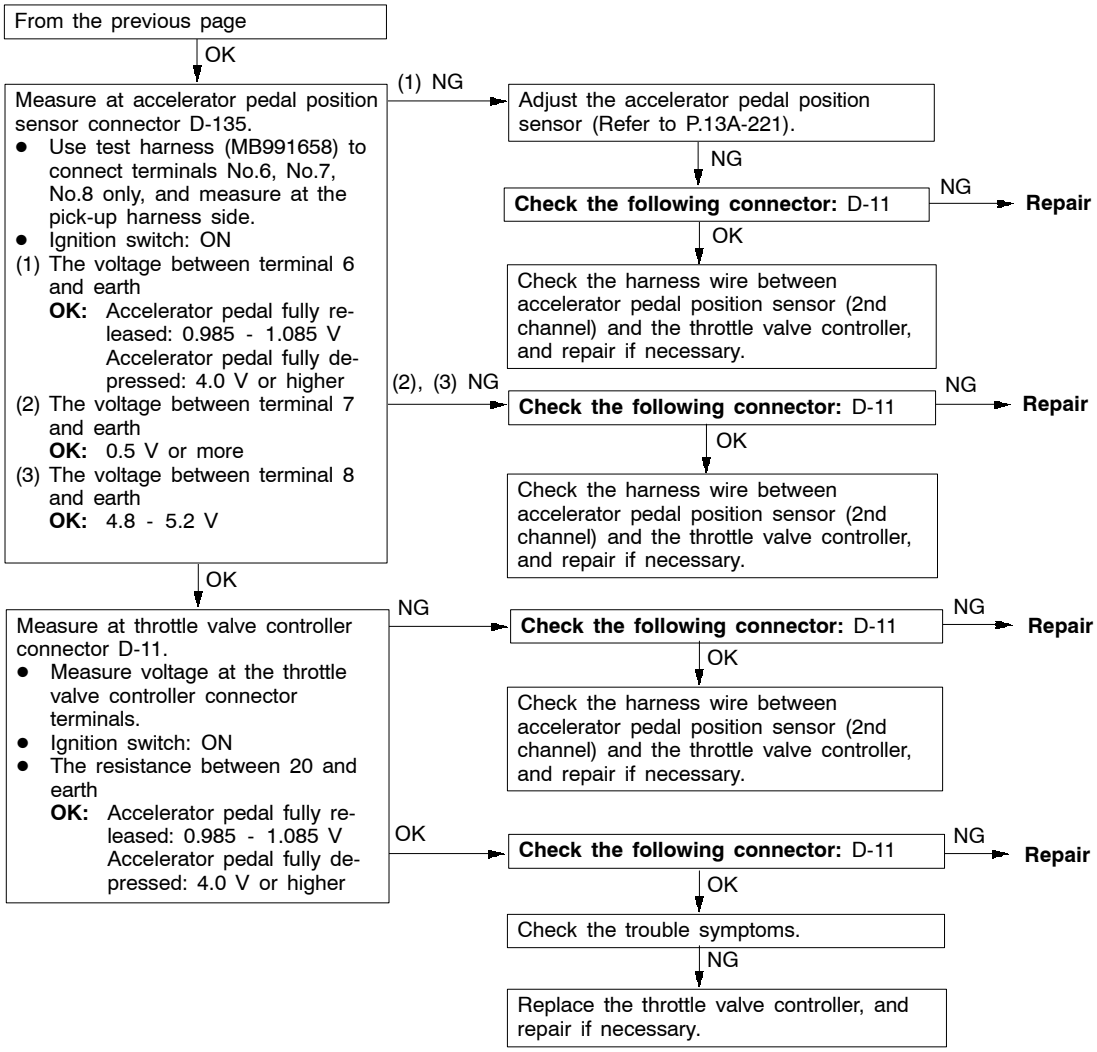


| Code No.P1226 Throttle valve controller system | Probable cause |
|---|---|
| Set Conditions<br>● Errors in reading or writing to the throttle valve controller ROM. | ● Malfunction of the throttle valve controller |

Replace the throttle valve controller.

Purchased from www.WorkshopManuals.co.uk

www.WorkshopManuals.co.uk

| Code No.P1500 Alternator FR terminal system | Probable cause |
|---|---|
| Range of Check<br>● Engine speed: 50 r/min or more<br>Set Conditions<br>● Input voltage from the alternator FR terminal is system voltage for 20 seconds. | ● Open circuit in alternator FR terminal circuit<br>● Malfunction of engine-ECU |

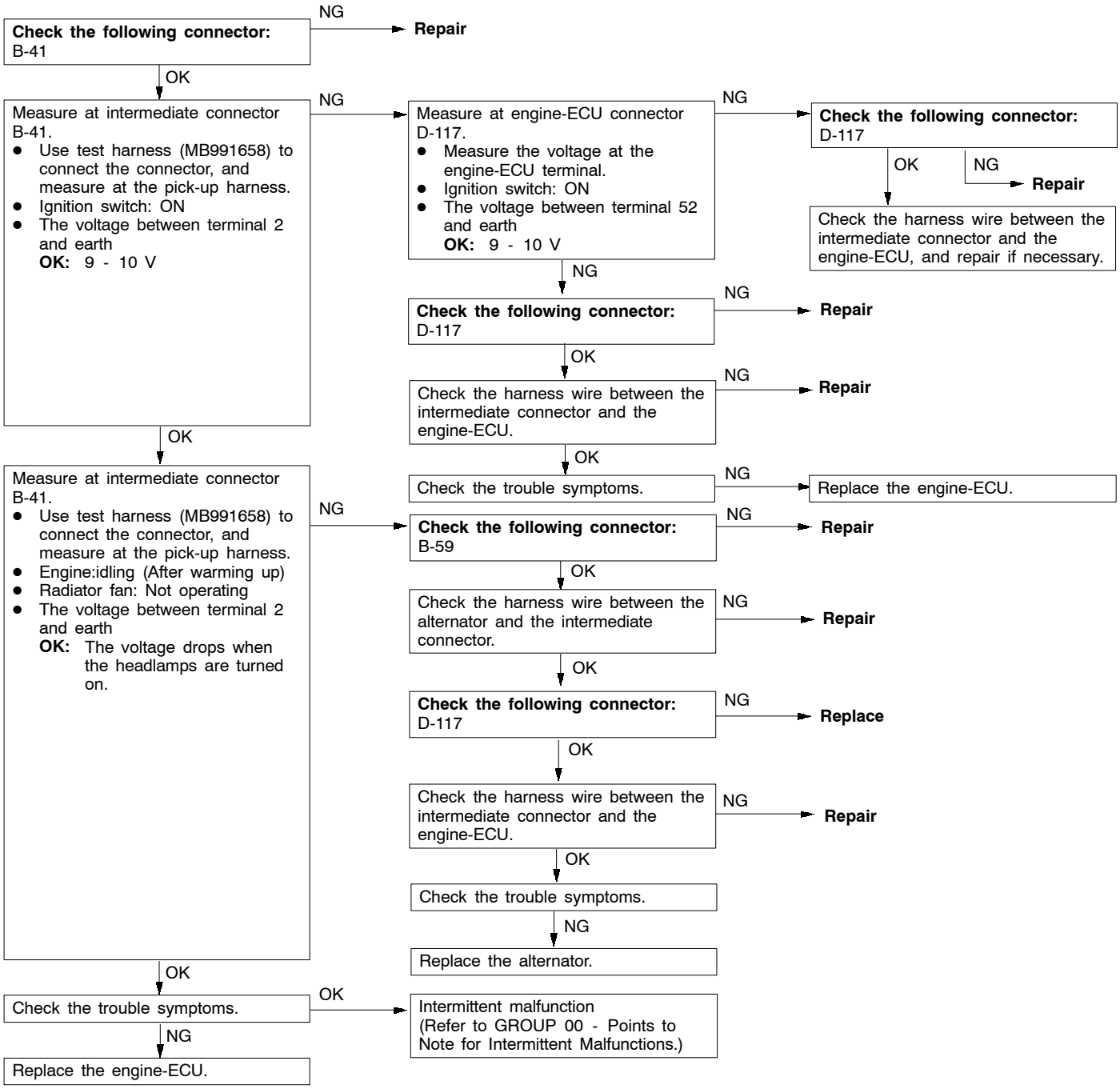


Purchased from www.WorkshopManuals.co.uk

www.WorkshopManuals.co.uk

| Cord No.P1610 Immobilizer system | Probable cause |
|---|---|
| Range of Check<br>● Ignition switch: ON<br>Set Conditions<br>● Improper communication between the engine-ECU and the immobilizer-ECU | ● Open or short circuit, or loose connector contact<br>● Malfunction of the immobilizer-ECU<br>● Malfunction of the engine-ECU |

NOTE
(1) If the registered ignition keys are close each other when starting the engine, radio interference may cause this code to be displayed.
(2) This code may be displayed when registering the key encrypted code.

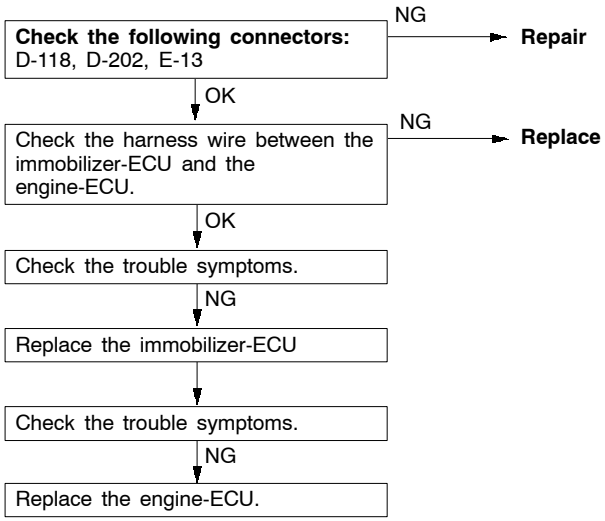


Purchased from www.WorkshopManuals.co.uk

www.WorkshopManuals.co.uk

## INSPECTION CHART FOR TROUBLE SYMPTOMS

| Trouble symptom | | Inspection procedure No. | Reference page |
|---|---|---|---|
| Communication with MUT-II is impossible. | Communication with all systems is not possible. | 1 | 13A-74 |
| | Communication with engine-ECU only is not possible. | 2 | 13A-75 |
| Engine warning lamp and related parts | The engine warning lamp does not illuminate right after the ignition switch is turned to the ON position. | 3 | 13A-76 |
| | The engine warning lamp remains illuminating and never goes out. | 4 | 13A-76 |
| Starting | No initial combustion (starting impossible) | 5 | 13A-77 |
| | Initial combustion but no complete combustion (starting impossible) | 6 | 13A-79 |
| | Long time to start (improper starting) | | |
| Idling stability (Improper idling) | Unstable idling (Rough idling, hunting) | 7 | 13A-81 |
| | Idling speed is high. (Improper idling speed) | 8 | 13A-83 |
| | Idling speed is low. (Improper idling speed) | | |
| Idling stability (Engine stalls) | When the engine is cold, it stalls at idling. (Die out) | 9 | 13A-84 |
| | When the engine is hot, it stalls at idling. (Die out) | 10 | 13A-85 |
| | The engine stalls when starting the car. (Pass out) | 11 | 13A-87 |
| | The engine stalls when decelerating. | 12 | 13A-88 |
| Driving | Hesitation, sag or stumble | 13 | 13A-89 |
| | Poor acceleration | | |
| | Surge | | |
| | The feeling of impact or vibration when accelerating | 14 | 13A-90 |
| | The feeling of impact or vibration when decelerating | 15 | 13A-91 |
| | Knocking | 16 | 13A-91 |
| Dieseling | | 17 | 13A-91 |
| Too high CO and HC concentration when idling | | 18 | 13A-92 |
| Low alternator output voltage (approx. 12.3 V) | | 19 | 13A-94 |
| Engine idle speed is incorrect while the A/C is on. | | 20 | 13A-94 |
| A/C condenser fan is inoperative | | 21 | 13A-95 |
| Clutch switch system malfunction | | 22 | 13A-96 |
| GDI ECO indicator lamp system | GDI ECO indicator lamp does not illuminate. | 23 | 13A-96 |
| | GDI ECO indicator lamp remains illuminated and does not go off. | 24 | 13A-97 |

Purchased from www.WorkshopManuals.co.uk

www.WorkshopManuals.co.uk

## PROBLEM SYMPTOMS TABLE (FOR YOUR INFORMATION)

| Items | | Symptom |
|---|---|---|
| Starting | Won't start | The starter is used to crank the engine, but there is no combustion within the cylinders, and the engine won't start. |
| | Fires up and dies | There is combustion within the cylinders, but then the engine soon stalls. |
| | Hard starting | Engine starts after cranking a while. |
| Idling stability | Hunting | Engine speed doesn't remain constant; changes at idle. |
| | Rough idle | Usually, a judgement can be based upon the movement of the tachometer pointer, and the vibration transmitted to the steering wheel, shift lever, body, etc. This is called rough idle. |
| | Incorrect idle speed | The engine doesn't idle at the usual correct speed. |
| | Engine stall (Die out) | The engine stalls when the foot is taken from the accelerator pedal, regardless of whether the vehicles is moving or not. |
| | Engine stall (Pass out) | The engine stalls when the accelerator pedal is depressed or while it is being used. |
| Driving | Hesitation, Sag | "Hesitation" is the delay in response of the vehicle speed (engine speed) that occurs when the accelerator is depressed in order to accelerate from the speed at which the vehicle is now traveling, or a temporary drop in vehicle speed (engine speed) during such acceleration.<br>Serious hesitation is called "sag".<br> 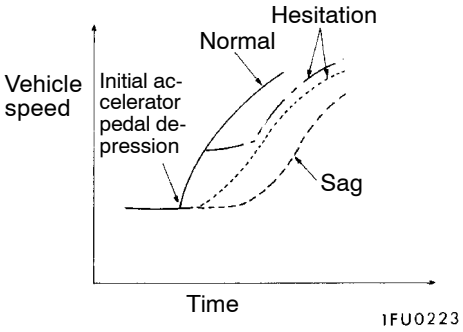 |
| | Poor acceleration | Poor acceleration is inability to obtain an acceleration corresponding to the degree of throttle opening, even though acceleration is smooth, or the inability to reach maximum speed. |
| | Stumble | Engine speed increase is delayed when the accelerator pedal is initially depressed for acceleration.<br> 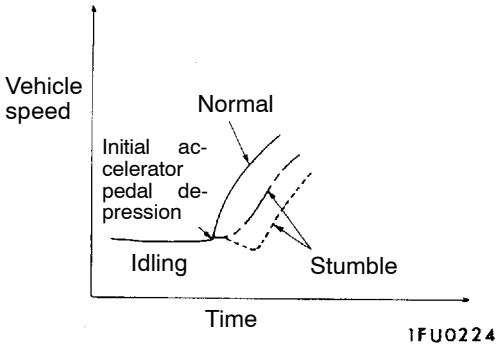 |

Purchased from www.WorkshopManuals.co.uk

www.WorkshopManuals.co.uk

| Items | | Symptom |
|---|---|---|
| Driving | Shock | The feeling of a comparatively large impact or vibration when the engine is accelerated or decelerated. |
| | Surge | This is repeated surging ahead during constant speed travel or during variable speed travel. |
| | Knocking | A sharp sound like a hammer striking the cylinder walls during driving and which adversely affects driving. |
| Stopping | Run on (“Dieseling”) | The condition in which the engine continues to run after the ignition switch is turned to OFF. Also called “Dieseling”. |

## INSPECTION PROCEDURE FOR TROUBLE SYMPTOMS

### INSPECTION PROCEDURE 1

| **Communication with MUT-II is not possible. (Communication with all systems is not possible.)** | **Probable cause** |
|---|---|
| The cause is probably a defect in the power supply system (including earth) for the diagnosis line. | • Malfunction of the connector<br>• Malfunction of the harness wire<br>• Malfunction of MUT-II |

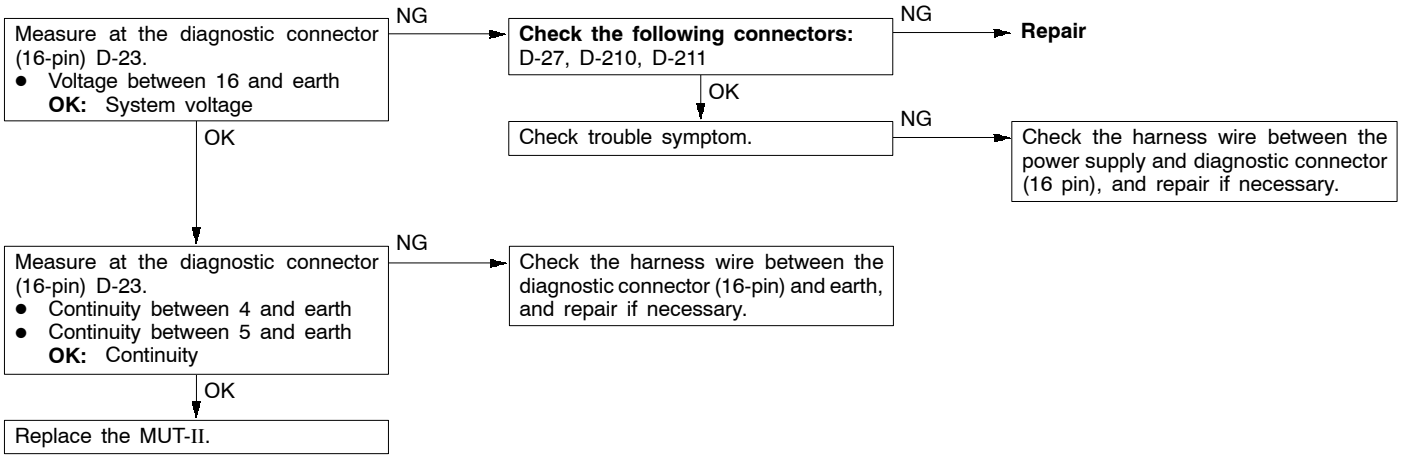


Purchased from www.WorkshopManuals.co.uk

www.WorkshopManuals.co.uk

## Inspection procedure 2

| MUT-II communication with engine-ECU is impossible. | Probable cause |
|---|---|
| One of the following causes may be suspected.<br>● No power supply to engine-ECU.<br>● Defective earth circuit of engine-ECU.<br>● Defective engine-ECU.<br>● Improper communication line between engine-ECU and MUT-II | ● Malfunction of engine-ECU power supply circuit<br>● Malfunction of engine-ECU<br>● Open circuit between the engine-ECU and diagnosis connector |

**Check the following connectors:**
D-06, D-23, D-33, D-118, D-128, D-222, E-13
→ NG → **Repair**
↓ OK

Check trouble symptom.
↓ NG

Check the harness wire between engine-ECU and diagnosis connector.
→ NG → **Repair**
↓ OK

Check the engine-ECU power supply and earth circuit system. (Refer to P.13A-98, Inspection procedure 25.)

NOTE
On vehicles with center display, if a malfunction cannot be resolved after the procedure above, check the center display and replace if necessary. (Refer to GROUP 54 - Center display.)

Purchased from www.WorkshopManuals.co.uk

www.WorkshopManuals.co.uk

## Inspection procedure 3

| The engine warning lamp does not illuminate right after the ignition switch is turned to the ON position. | Probable cause |
|---|---|
| Because there is a burnt-out bulb, the engine-ECU causes the engine warning lamp to illuminate for five seconds immediately after the ignition switch is turned to ON. If the engine warning lamp does not illuminate immediately after the ignition switch is turned to ON, one of the malfunctions listed at right has probably occurred. | • Burnt-out bulb<br>• Defective warning lamp circuit<br>• Malfunction of the engine-ECU |

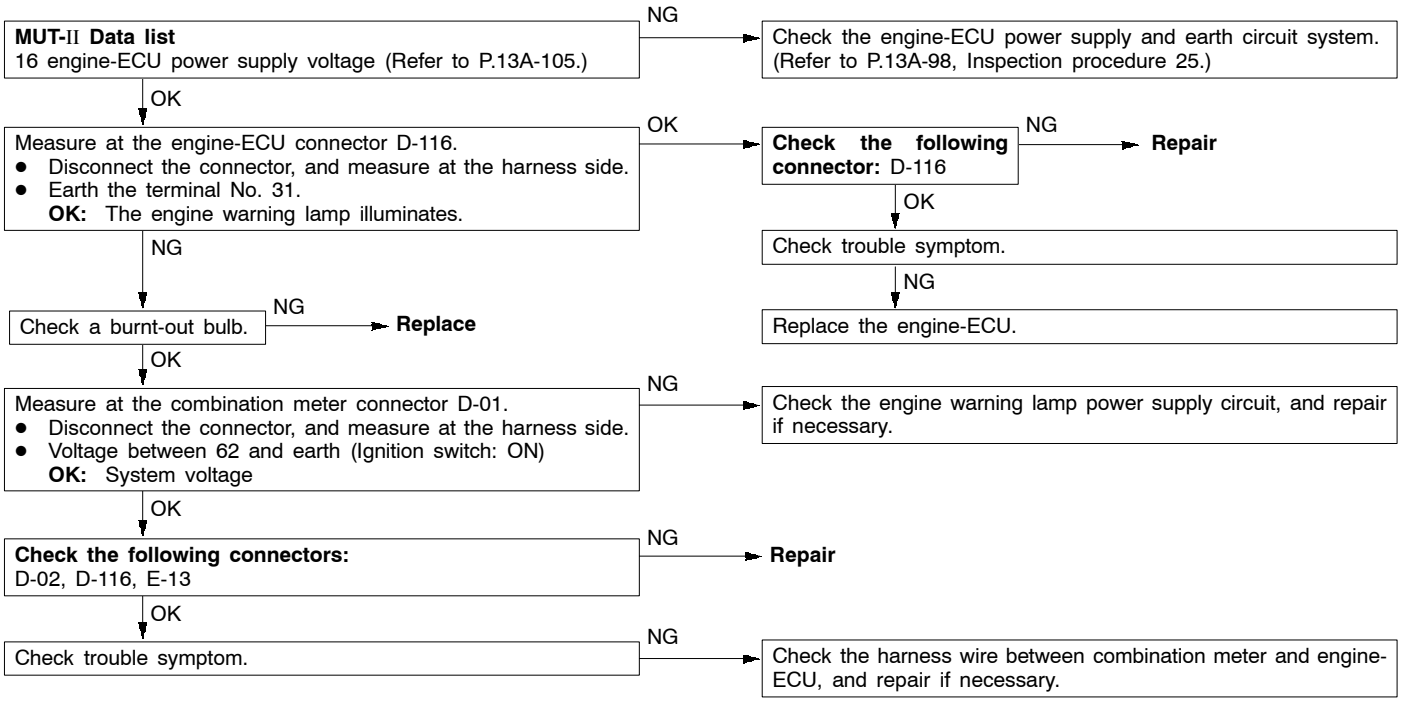


## Inspection procedure 4

| The engine warning lamp remains illuminating and never goes out. | Probable cause |
|---|---|
| In cases such as the above, the cause is probably that the engine-ECU is detecting a problem in a sensor or actuator, or that one of the malfunctions listed at right has occurred. | • Short-circuit between the engine warning lamp and engine-ECU<br>• Malfunction of the engine-ECU |

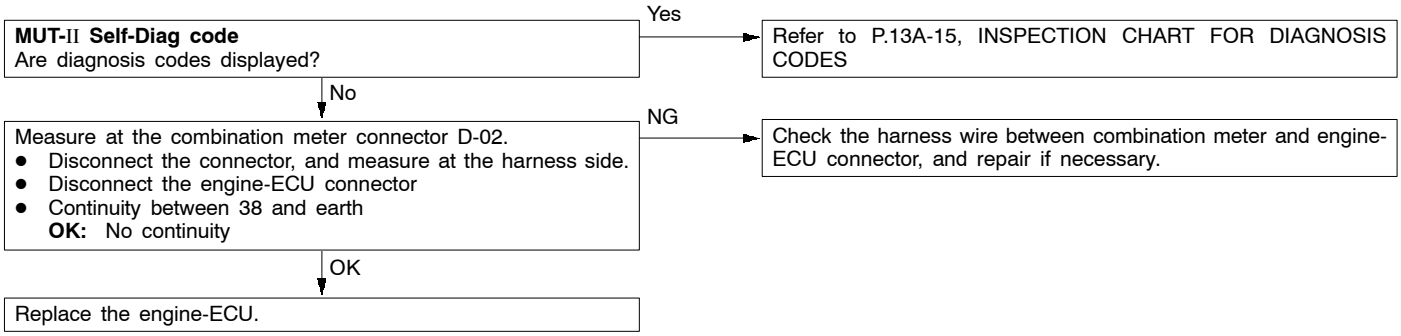


Purchased from www.WorkshopManuals.co.uk

www.WorkshopManuals.co.uk

## Inspection procedure 5

| No initial combustion (starting impossible) | Probable cause |
|---|---|
| This is caused by incorrect fuel supply into the combustion chamber, and improper ignition circuit. Besides that, foreign material may be contaminated in fuel. | • Malfunction of the fuel supply system<br>• Malfunction of the ignition system<br>• Malfunction of the engine-ECU |

Check system voltage while the engine is cranking.
**OK:** 8 V or more
- NG → Check the battery. (Refer to GROUP 55 - Battery.)
- OK ↓

**MUT-II Self-Diag code**
Is a diagnosis code displayed?
- Yes → Refer to P.13A-15, INSPECTION CHART FOR DIAGNOSIS CODES.
- No ↓

**MUT-II Data list**
16 System voltage (Refer to P.13A-105.)
- NG → Check the engine control relay and ignition switch-IG system. (Refer to P.13A-99, Inspection procedure 26.)
- OK ↓

Does the camshaft rotate when the engine is cranking?
- No → Check if the timing belt is broken or damaged.
- Yes ↓

**MUT-II Actuator test**
07 Fuel pump (low pressure) (Refer to P.13A-110.)
- NG → Check the fuel pump (low pressure) system. (Refer to P.13A-101, Inspection procedure 29.)
- OK ↓

**MUT-II Data list**
22 Crank angle sensor (Refer to P.13A-105.)
- NG → Check the crank angle sensor system. (Refer to P.13A-56, code No. P0335.)
- OK ↓

**MUT-II Data list**
21 Engine coolant temperature sensor (Refer to P.13A-105.)
- NG → Check the engine coolant temperature sensor system. (Refer to P.13A-22, code No. P0115.)
- OK ↓

**MUT-II Data list**
79 Throttle position sensor (1st channel) (Refer to P.13A-105.)
- NG → Check the throttle position sensor (1st channel) system. (Refer to P.13A-25, code No. P0120.)
- OK ↓

Inspect engine start ability by cranking the engine while the accelerator pedal is slightly depressed.
- OK → Clean around the throttle valve. (Refer to P.13A-220.)
- NG ↓

Measure at injector driver connector B-121.
- Disconnect the connector, and measure at the connector side.
- Voltage between each of terminals 4, 12, 21 and earth (Ignition switch: ON)

**OK:** System voltage
- NG → Check the injector driver system. (Refer to P.13A-104, Inspection procedure 34.)
- OK ↓

Check fuel leakage. (Refer to P.13A-225.)
- NG → **Repair**
- OK ↓

Measure low fuel pressure between the fuel pump (low pressure) and fuel pump (high pressure). (Refer to P.13A-222.)
- NG → **Repair**
- OK ↓

Measure at ignition coil connectors B-101, B-108, B-112, B-113, B-116, B-119.
- Connect the connector.
- Connect a timing light to the No.1 terminal of each connector in turn.

(Engine cranking)
**OK:** The timing light flashes.
- NG → Check the ignition coil (incorporating power transitor) system. (Refer to P.13A-53, code No. P0300.)
- OK ↓

Check ignition timing while the engine is cranking.
**OK:** Approx. 5° BTDC
- NG → Check that the crank angle sensor and timing belt cover are properly installed.
- OK ↓

To the next page

Purchased from www.WorkshopManuals.co.uk

www.WorkshopManuals.co.uk

From the previous page

OK

Check ignition coil spark for each cylinder.
(1) Remove the ignition coil.
(2) Install a new spark plug to the removed ignition coil.
(3) Disconnect the injector intermediate connector.

**Caution**
**Never touch the connector terminal as approx. 100 V is applied to the injector, or you are seriously injured.**

(4) Earth the spark plug electrode securely.
(5) Check that the spark plug ignites when the engine is cranked.

NG → Replace the ignition coil.

OK

Check all the following items:
- Spark plug
- Compression pressure
- Foreign material (such as water or kerosine) entered the fuel lines

OK

Check trouble symptom.

NG → Replace the injector.

Purchased from www.WorkshopManuals.co.uk

www.WorkshopManuals.co.uk

## Inspection procedure 6

| Initial combustion takes place, but does not complete (start impossible), too long time to start (poor start) | Probable cause |
|---|---|
| This may be caused by improper spark plug ignition (poor spark), improper mixture during engine cranking, improper fuel pressure. | • Malfunction of the fuel supply system<br>• Malfunction of the fuel pressure sensor<br>• Malfunction of the ignition system<br>• Malfunction of the electronic-controlled throttle vale system<br>• Malfunction of the engine-ECU |

Check system voltage while the engine is cranking.
**OK:** 8 V or more
- NG → Check the battery. (Refer to GROUP 55 - Battery.)
- OK ↓

**MUT-II Self-Diag code**
Is a diagnosis code displayed?
- Yes → Refer to P.13A-15, INSPECTION CHART FOR DIAGNOSIS CODES.
- No ↓

**MUT-II Actuator test**
07 Fuel pump (low pressure) (Refer to P.13A-110.)
- NG → Check the fuel pump (low pressure) system. (Refer to P.13A-101, Inspection procedure 29.)
- OK ↓

**MUT-II Data list**
21 Engine coolant temperature sensor (Refer to P.13A-105.)
- NG → Check the engine coolant temperature system. (Refer to P.13A-22, code No. P0115.)
- OK ↓

**MUT-II Data list**
18 Cranking signal (Refer to P.13A-105.)
- NG → Check the ignition switch-ST system. (Refer to P.13A-99, Inspection procedure 27.)
- OK ↓

**MUT-II Data list**
74 Fuel pressure sensor (Refer to P.13A-105.)
- NG → Check an abnormal fuel pressure system. (Refer to P.13A-36, code No. P0190.)
- OK ↓

Check fuel leakage. (Refer to P.13A-225.)
- NG → **Repair**
- OK ↓

Is the engine started normally when it is cranked with the accelerator pedal depressed slightly?
- Yes → Clean around the throttle valve. (Refer to P.13A-220.)
- No ↓

**MUT-II Data list**
79 Throttle position sensor (1st channel) (Refer to P.13A-105.)
- NG → Check the throttle valve position feedback system. (Refer to P.13A-65, code No. P1221.)
- OK ↓

Check ignition timing when the engine is cranked.
**OK:** approx. 5° BTDC
- NG → Check that the crank angle sensor and timing belt cover are properly installed.
- OK ↓

To the next page

Purchased from www.WorkshopManuals.co.uk

www.WorkshopManuals.co.uk

From the previous page

OK

Check ignition coil spark for each cylinder.
(1) Remove the ignition coil.
(2) Install a new spark plug to the removed ignition coil.
(3) Disconnect the injector intermediate connector.

**Caution**
**Never touch the connector terminal as approx. 100 V is applied to the injector, or you are seriously injured.**

(4) Earth the spark plug electrode securely.
(5) Check that the spark plug ignites when the engine is cranked.

NG → Replace the ignition coil.

OK

Check all the following items:
- Spark plug
- Compression pressure
- Foreign material (such as water or kerosine) entered the fuel lines

OK

Check trouble symptom.

NG → Replace the injector.

Purchased from www.WorkshopManuals.co.uk

www.WorkshopManuals.co.uk

## Inspection procedure 7

| Unstable idling (rough idle, hunting) | Probable cause |
|---|---|
| This malfunction is probably caused by a faulty ignition system, improper air/fuel ratio, a faulty electronic-controlled throttle valve system, improper compression pressure, etc. As many causes can be suspected, diagnose from easier items. | • Malfunction of the ignition system<br>• Malfunction of the air/fuel ratio control system<br>• Malfunction of the electronic-control throttle valve system<br>• Improper compression pressure<br>• Air sucking into the air intake system |

Has the battery been disconnected recently?
- Yes → Warm up the engine, and then let it run at idle for approx. ten minutes.
- No ↓

**MUT-II Self-Diag code**
Is a diagnosis code displayed?
- Yes → Refer to P.13A-15, INSPECTION CHART FOR DIAGNOSIS CODES.
- No ↓

Does the engine idle speed fluctuates excessively (excessive hunting)?
- Yes → Clean around the throttle valve. (Refer to P.13A-220.)
- No ↓

**MUT-II Data list**
79 Throttle position sensor (1st channel) (Refer to P.13A-105.)
- NG → Check the throttle valve position feedback system. (Refer to P.13A-65, code No. P1221.)
- OK ↓

**MUT-II Data list**
26 Accelerator pedal position switch (Refer to P.13A-110.)
- NG → Check the accelerator pedal position switch system. (Refer to P.13A-100, Inspection procedure 28.)
- OK ↓

**MUT-II Data list**
13 Intake air temperature sensor (Refer to P.13A-105.)
- NG → Check the intake air temperature sensor system. (Refer to P.13A-21, code No. P0110.)
- OK ↓

**MUT-II Data list**
25 Barometric pressure sensor (Refer to P.13A-105.)
- NG → Check the barometric pressure sensor system. (Refer to P.13A-19, code No. P0105.)
- OK ↓

**MUT-II Data list**
21 Engine coolant temperature sensor (Refer to P.13A-105.)
- NG → Check the engine coolant temperature sensor. (Refer to P.13A-22, code No. P0115.)
- OK ↓

**MUT-II Actuator test**
08 Purge control solenoid valve (Refer to P.13A-110.)
- NG → Check the purge control solenoid valve system. (Refer to P.13A-62, code No. P0443.)
- OK ↓

**MUT-II Data list**
59 Oxygen sensor (rear)
- Transmission: 2nd gear
- Driving with throttle widely open

**OK:** 600 - 1,000 mV
- NG → Check the oxygen sensor (rear) system. (Refer to P.13A-31, code No. P0136.)
- OK ↓

**MUT-II Data list**
11 Oxygen sensor (front)
**OK:** 600 - 1,000 mV when the engine is suddenly raced
- NG → Check the oxygen sensor (front) system. (Refer to P.13A-28, code No. P0130.)
- OK ↓

To the next page

Purchased from www.WorkshopManuals.co.uk

www.WorkshopManuals.co.uk

From the previous page

OK ↓

**MUT-II Data list**
11 Oxygen sensor (front)
**OK:** 0 - 400 mV and 600 - 1,000 mV alternates when the engine is idling (wait for four minutes after the engine started).

NG → Measure fuel high-pressure between the fuel pump (high pressure) and injector. (Refer to P.13A-224.)
- OK → Check that air is sucked in the air intake system.
  - Broken intake manifold gasket
  - Damaged vacuum hose
  - Damaged air intake hose
- NG → **Repair**

OK ↓

**MUT-II Data list**
27 Power steering fluid pressure switch (Refer to P.13A-105.)

NG → Check the power steering fluid pressure switch system. (Refer to P.13A-102, Inspection procedure 30.)

OK ↓

**MUT-II Data list**
28 A/C switch (Refer to P.13A-105.)

NG → Check the A/C switch and A/C relay system. (Refer to P.13A-102, Inspection procedure 31.)

OK ↓

**MUT-II Data list**
67 Stop lamp switch (Refer to P.13A-105.)

NG → Check the stop lamp switch. (Refer to P.13A-103, Inspection procedure 32.)

OK ↓

**MUT-II Data list**
31 Small lamp switch (Refer to P.13A-105.)

NG → Check the small lamp switch system. (Refer to P.13A-104, Inspection procedure 33.)

OK ↓

**MUT-II Data list**
68 EGR valve (Refer to P.13A-105.)

NG → Check the EGR valve. (Refer to P.13A-60, code No. P0403.)

OK ↓

Check ignition timing. (Refer to GROUP 11A - Engine Adjustment.)

NG → Check that the crank angle sensor and timing belt cover are properly installed.

OK ↓

Clean around the throttle valve. (Refer to P.13A-220.)

↓

Check trouble symptom.

NG ↓

Check ignition coil spark for each cylinder.
(1) Remove the ignition coil.
(2) Install a new spark plug to the removed ignition coil.
(3) Disconnect the injector intermediate connector.

**Caution**
**Never touch the connector terminal as approx. 100 V is applied to the injector, or you are seriously injured.**

(4) Earth the spark plug electrode securely.
(5) Check that the spark plug ignites when the engine is cranked.

NG → Replace the ignition coil.

OK ↓

Check all the following items in that order.
(1) Spark plugs
(2) Exhaust gas emission control system
(3) EGR system
(4) Compression pressure
(5) Foreign material (such as water or kerosine)entered the fuel line.
(6) Air is sucked in the air intake system, or EGR gas leaks.
- Damaged intake manifold gasket
- Damaged air intake hose
- Damaged vacuum hose
- Faulty EGR valve seat

Purchased from www.WorkshopManuals.co.uk

www.WorkshopManuals.co.uk

## Inspection procedure 8

| Idle speed is high or low (Improper idling) | Probable cause |
|---|---|
| The cause is probably that the intake air amount during idling is too great or too small. | • Malfunction of the electronic-controlled throttle valve system<br>• Malfunction of the throttle body |

**MUT-II Self-Diag code**
Is a diagnosis code displayed?
- Yes → (Refer to P.13A-15, INSPECTION CHART FOR DIAGNOSIS CODES.)
- No ↓

**MUT-II Data list**
79 Throttle position sensor (1st channel) (Refer to P.13A-105.)
- NG → Check the throttle valve position feedback system. (Refer to P.13A-65, code No.S P1221.)
- OK ↓

**MUT-II Actuator test**
08 Purge control solenoid valve (Refer to P.13A-110.)
- NG → Check the purge control solenoid valve. (Refer to P.13A-62, code No. P0443.)
- OK ↓

**MUT-II Data list**
26 Accelerator pedal position switch (Refer to P.13A-105.)
- NG → Check the accelerator pedal position switch system. (Refer to P.13A-100, Inspection procedure 28.)
- OK ↓

**MUT-II Data list**
21 Engine coolant temperature sensor (Refer to P.13A-105.)
- NG → Check the engine coolant temperature sensor. (Refer to P.13A-22, code No. P0115.)
- OK ↓

**MUT-II Data list**
28 A/C switch (Refer to P.13A-105.)
- NG → Check the A/C switch and A/C relay system. (Refer to P.13A-102, Inspection procedure 31.)
- OK ↓

**MUT-II Data list**
67 Stop lamp switch (Refer to P.13A-105.)
- NG → Check the stop lamp switch system. (Refer to P.13A-103, Inspection procedure 32.)
- OK ↓

- Clean around the throttle valve. (Refer to P.13A-220.)
- Adjust the throttle position sensor. (Refer to P.13A-220.)

Purchased from www.WorkshopManuals.co.uk

www.WorkshopManuals.co.uk

## Inspection procedure 9

| When the engine is cold, it stalls at idling. (Die out) | Probable cause |
|---|---|
| The cause is probably an incorrect air/fuel ratio or poor intake air amount when the engine is cold. | • Malfunction of the electronic-control throttle valve system<br>• Malfunction of the throttle body |

Have the battery terminals been disconnected recently?
- Yes → Warm up the engine, and then let it run at idle for approx. ten minutes.
- No ↓

**MUT-II Self-Diag code**
Is a diagnosis code displayed?
- Yes → (Refer to P.13A-15, INSPECTION CHART FOR DIAGNOSIS CODES.)
- No ↓

Is the engine idling correct after the engine has been warmed up?
- Yes → Refer to "Unstable idling (rough idle, hunting)." (Refer to P.13A-81, Inspection procedure 7.)
- No ↓

**MUT-II Data list**
22 Crank angle sensor (Refer to P.13A-105.)
Check idling speed when the engine is cold.
- NG → Check the throttle valve position feedback system. (Refer to P.13A-65, code No. P1221.)
- OK ↓

**MUT-II Data list**
26 Accelerator pedal position switch (Refer to P.13A-105.)
- NG → Check the accelerator position switch. (Refer to P.13A-100, Inspection procedure 28.)
- OK ↓

**MUT-II Data list**
21 Engine coolant temperature sensor (Refer to P.13A-105.)
- NG → Check the engine coolant temperature sensor. (Refer to P.13A-22, code No. P0115.)
- OK ↓

**MUT-II Data list**
68 EGR valve (Refer to P.13A-105.)
- NG → Check the EGR valve system. (Refer to P.13A-60, code No. P0403.)
- OK ↓

Does the engine stall immediately after the accelerator pedal is released?
- Yes → Clean around the throttle valve. (Refer to P.13A-220.)
- No ↓

Measure fuel high pressure between the fuel pump (high pressure) and injector. (Refer to P.13A-224.)
- NG → **Repair**
- OK ↓

Check ignition timing. (Refer to GROUP 11A - Engine Adjustment.)
- NG → Check that the crank angle sensor and timing belt cover are properly installed.
- OK ↓

Check ignition coil spark for each cylinder.
(1) Remove the ignition coil.
(2) Install a new spark plug to the removed ignition coil.
(3) Disconnect the injector intermediate connector.

**Caution**
**Never touch the connector terminal as approx. 100 V is applied to the injector, or you are seriously injured.**

(4) Earth the spark plug electrode securely.
(5) Check that the spark plug ignites when the engine is cranked.
- NG → Replace the ignition coil.
- OK ↓

Check all the following items:
- Spark plugs
- Compression pressure
- Engine oil viscosity

- OK → Check trouble symptom.
  - NG ↓ Replace the injector.

Purchased from www.WorkshopManuals.co.uk

www.WorkshopManuals.co.uk

## Inspection procedure 10

| When the engine is hot, it stalls at idling. (Die out) | Probable cause |
|---|---|
| The cause is probably an improper air/fuel ratio, faulty electronic-controlled throttle valve system, compression pressure. In addition, if the engine stalls suddenly, another possible cause might be a poor connector contact. | • Malfunction of the ignition system<br>• Malfunction of air/fuel ratio control system<br>• Malfunction of electronic-controlled throttle valve system<br>• Malfunction of the throttle body<br>• Poor connector contact<br>• Improper compression pressure<br>• Air stuck in the air intake system |

Have the battery terminals been disconnected recently?
- Yes → Warm up the engine, and then let it run at idle for approx. ten minutes.
- No ↓

**MUT-II Self-Diag code**
Is a diagnosis code displayed?
- Yes → Refer to P.13A-15, INSPECTION CHART FOR DIAGNOSIS CODES.
- No ↓

**MUT-II Data list**
79 Throttle position sensor (1st channel) (Refer to P.13A-105.)
- NG → Check the throttle valve position feedback system. (Refer to P.13A-65, code No. P1221.)
- OK ↓

Is it easy to reproduce the engine stall?
- No → While carrying out an intermittent malfunction simulation test. (Refer to GROUP 00 - Points to Note for Intermittent Malfunction.), check for sudden changes in the following signals.
  - Crank angle sensor signal
  - Injector drive signal
  - Fuel pump (low pressure) drive signal
  - Air flow sensor
  - Primary ignition signal
  - Power supply to the engine-ECU
- Yes ↓

**MUT-II Data list**
26 Accelerator pedal position switch (Refer to P.13A-105.)
- NG → Check the accelerator pedal position switch. (Refer to P.13A-100, Inspection procedure 28.)
- OK ↓

**MUT-II Data list**
13 Intake air temperature sensor (Refer to P.13A-105.)
- NG → Check the intake air temperature sensor. (Refer to P.13A-21, code No. P0110.)
- OK ↓

**MUT-II Data list**
25 Barometric pressure sensor (Refer to P.13A-105.)
- NG → Check the barometric pressure sensor. (Refer to P.13A-19, code No. P0105.)
- OK ↓

**MUT-II Data list**
21 Engine coolant temperature sensor (Refer to P.13A-105.)
- NG → Check the engine coolant temperature sensor. (Refer to P.13A-22, code No. P0115.)
- OK ↓

**MUT-II Data list**
59 Oxygen sensor (rear)
- Transmission: 2nd gear
- Driving with throttle widely open

**OK:** 600 - 1,000 mV
- NG → Check the oxygen sensor (rear) system. (Refer to P.13A-31, code No. P0136.)
- OK ↓

**MUT-II Data list**
11 Oxygen sensor (front)
**OK:** 600 - 1,000 mV when the engine is suddenly raced
- NG → Check the oxygen sensor (front) system. (Refer to P.13A-28, code No. P0130.)
- OK ↓

**MUT-II Data list**
11 Oxygen sensor (front)
**OK:** 0 - 400 mV and 600 - 1,000 mV alternates when the engine is idling (wait for four minutes after the engine started).
- NG → Measure fuel high-pressure between the fuel pump (high pressure) and injector. (Refer to P.13A-224.)
  - OK ↓
  - NG → **Repair**

Check that air is sucked in the air intake system.
- Broken intake manifold gasket
- Damaged vacuum hose
- Damaged air intake hose

- OK ↓

To the next page

Purchased from www.WorkshopManuals.co.uk

www.WorkshopManuals.co.uk

From the previous page

OK ↓

**MUT-II Data list**
27 Power steering fluid pressure switch (Refer to P.13A-105.)

NG → Check the power steering fluid pressure switch system. (Refer to P.13A-102, Inspection procedure 30.)

OK ↓

**MUT-II Data list**
28 A/C switch (Refer to P.13A-105.)

NG → Check the A/C switch and A/C relay system. (Refer to P.13A-102, Inspection procedure 31.)

OK ↓

**MUT-II Data list**
31 Small lamp switch (Refer to P.13A-105.)

NG → Check the small lamp switch system. (Refer to P.13A-104, Inspection procedure 33.)

OK ↓

**MUT-II Data list**
34 Air flow sensor reset signal (Refer to P.13A-105.)

NG → Check the air flow sensor system. (Refer to P.13A-17, code No. P0100.)

OK ↓

**MUT-II Data list**
68 EGR valve (Refer to P.13A-105.)

NG → Check the EGR valve. (Refer to P.13A-60, code No. P0403.)

OK ↓

Does the engine stall immediately after the accelerator pedal is released?

Yes → Clean around the throttle valve. (Refer to P.13A-220.)

No ↓

Check ignition timing. (Refer to GROUP 11A - Engine Adjustment.)

NG → Check that the crank angle sensor and timing belt cover are properly installed.

OK ↓

Check ignition coil spark for each cylinder.
(1) Remove the ignition coil.
(2) Install a new spark plug to the removed ignition coil.
(3) Disconnect the injector intermediate connector.

**Caution**
**Never touch the connector terminal as approx. 100 V is applied to the injector, or you are seriously injured.**

(4) Earth the spark plug electrode securely.
(5) Check that the spark plug ignites when the engine is cranked.

NG → Replace the ignition coil.

OK ↓

Check all the following items:
- Spark plugs
- Compression pressure
- Foreign material (such as water or kerosine) entered the fuel lines

Purchased from www.WorkshopManuals.co.uk

www.WorkshopManuals.co.uk

## Inspection procedure 11

| The engine stalls when starting the car. (Pass out) | Probable cause |
|---|---|
| The cause is probably poor ignition due to a malfunctioning spark plug (weak spark), or an incorrect air/fuel ratio when the accelerator is depressed. | • Malfunction of the ignition system<br>• Malfunction of the EGR valve<br>• Air stuck in the air intake system |

**MUT-II Self-Diag code**
Is a diagnosis code displayed?

- Yes → (Refer to P.13A-15, INSPECTION CHART FOR DIAGNOSIS CODES.)
- No ↓

**MUT-II Data list**
68 EGR valve (Refer to P.13A-105.)

- NG → Check the EGR valve. (Refer to P.13A-60, code No. P0403.)
- OK ↓

**MUT-II Actuator test**
08 Purge control solenoid valve (Refer to P.13A-110.)

- NG → Check the purge control solenoid valve system. (Refer to P.13A-62, code No. P0443.)
- OK ↓

Check ignition coil spark for each cylinder.
(1) Remove the ignition coil.
(2) Install a new spark plug to the removed ignition coil.
(3) Disconnect the injector intermediate connector.

**Caution**
**Never touch the connector terminal as approx. 100 V is applied to the injector, or you are seriously injured.**

(4) Earth the spark plug electrode securely.
(5) Check that the spark plug ignites when the engine is cranked.

- NG → Replace the ignition coil.
- OK ↓

Check all the following items:
(1) Spark plug
(2) Check if air is stuck in the air intake system.
- Damage intake manifold gasket
- Damaged or disconnected vacuum hose
- Damaged air intake hose

Purchased from www.WorkshopManuals.co.uk

www.WorkshopManuals.co.uk

## Inspection procedure 12

| The engine stalls when decelerating. | Probable cause |
|---|---|
| The cause is probably an improper air/fuel ratio due to a faulty EGR system, or poor intake air volume due to a faulty electronic-controlled throttle valve system. | • Malfunction of the electronic-controlled throttle valve system<br>• Malfunction of the EGR valve |

Have the battery terminals been disconnected recently?
- Yes → Warm up the engine, and then let it run at idle for approx. ten minutes.
- No ↓

**MUT-II Self-Diag code**
Is a diagnosis code displayed?
- Yes → (Refer to P.13A-15, INSPECTION CHART FOR DIAGNOSIS CODES.)
- No ↓

**MUT-II Data list**
26 Accelerator pedal position switch (Refer to P.13A-105.)
- NG → Check the accelerator pedal position switch. (Refer to P.13A-100, Inspection procedure 28.)
- OK ↓

**MUT-II Data list**
79 Throttle position sensor (1st channel) (Refer to P.13A-105.)
- NG → Check the throttle valve position feedback system. (Refer to P.13A-65, code No. P1221.)
- OK ↓

**MUT-II Data list**
68 EGR valve (Refer to P.13A-105.)
- NG → Check the EGR valve system. (Refer to P.13A-69, code No. P0403.)
- OK ↓

Check ignition coil spark for each cylinder.
(1) Remove the ignition coil.
(2) Install a new spark plug to the removed ignition coil.
(3) Disconnect the injector intermediate connector.

**Caution**
**Never touch the connector terminal as approx. 100 V is applied to the injector, or you are seriously injured.**

(4) Earth the spark plug electrode securely.
(5) Check that the spark plug ignites when the engine is cranked.
- NG → Replace the ignition coil.
- OK ↓

Check all the following items:
- Spark plug
- Clean around the throttle valve (Refer to P.13A-220.)

Purchased from www.WorkshopManuals.co.uk

www.WorkshopManuals.co.uk

## Inspection procedure 13

| Hesitation, sag, stumble, poor acceleration or surge | Probable cause |
|---|---|
| The cause is probably a malfunction of the ignition system, electronic-controlled throttle valve system, compression pressure, etc. | • Malfunction of the ignition system<br>• Malfunction of the air/fuel ratio control system<br>• Malfunction of the electronic-controlled throttle valve system<br>• Improper compression pressure<br>• Air stuck in the air intake system |

**MUT-II Self-Diag code**
Is a diagnosis code displayed?
- Yes → (Refer to P.13A-15, INSPECTION CHART FOR DIAGNOSIS CODES.)
- OK ↓

Check ignition timing. (Refer to GROUP 11A - Engine Adjustment.)
- NG → Check that the crank angle sensor and timing belt cover are properly installed.
- OK ↓

**MUT-II Data list**
26 Accelerator pedal position switch (Refer to P.13A-105.)
- NG → Check the accelerator pedal position switch. (Refer to P.13A-100, Inspection procedure 28.)
- OK ↓

**MUT-II Data list**
13 Intake air temperature sensor (Refer to P.13A-105.)
- NG → Check the intake air temperature sensor. (Refer to P.13A-21, code No. P0110.)
- OK ↓

**MUT-II Data list**
25 Barometric pressure sensor (Refer to P.13A-105.)
- NG → Check the barometric pressure sensor. (Refer to P.13A-19, code No. P0105.)
- OK ↓

**MUT-II Data list**
21 Engine coolant temperature sensor (Refer to P.13A-105.)
- NG → Check the engine coolant temperature sensor. (Refer to P.13A-22, code No. P0115.)
- OK ↓

**MUT-II Data list**
79 Throttle position sensor (1st channel) (Refer to P.13A-105.)
- NG → Check the throttle valve position feedback system. (Refer to P.13A-65, code No. P1221.)
- OK ↓

**MUT-II Data list**
59 Oxygen sensor (rear) (Refer to P.13A-78.)
- Transmission: 2nd gear
- Driving with throttle widely open

**OK:** 600 - 1,000 mV
- NG → Check the oxygen sensor (rear) system. (Refer to P.13A-31, code No. P0136.)
- OK ↓

**MUT-II Data list**
11 Oxygen sensor (front)
**OK:** 600 - 1,000 mV when the engine is suddenly raced
- NG → Check the oxygen sensor (front) system. (Refer to P.13A-28, code No. P0130.)
- OK ↓

**MUT-II Data list**
11 Oxygen sensor (front)
**OK:** 0 - 400 mV and 600 - 1,000 mV alternates when the engine is idling (wait for four minutes after the engine started).
- NG → Measure fuel high-pressure between the fuel pump (high pressure) and injector. (Refer to P.13A-224.)
  - OK ↓ Check that air is sucked in the air intake system.
    - Broken intake manifold gasket
    - Damaged vacuum hose
    - Damaged air intake hose
- OK ↓

**MUT-II Data list**
68 EGR valve (Refer to P.13A-105.)
- NG → Check the EGR valve. (Refer to P.13A-60, code No. P0403.)
- OK ↓

**MUT-II Actuator test**
08 Purge control solenoid valve (Refer to P.13A-110.)
- NG → Check the purge control solenoid valve. (Refer to P.13A-62, code No. P0443.)
- OK ↓

To the next page

Purchased from www.WorkshopManuals.co.uk

www.WorkshopManuals.co.uk

From the previous page

OK ↓

Measure high fuel pressure between the fuel pump (high pressure) and injector. (Refer to P.13A-224.) — NG → **Repair**

OK ↓

Check ignition coil spark for each cylinder. — NG → Replace the ignition coil.
(1) Remove the ignition coil.
(2) Install a new spark plug to the removed ignition coil.
(3) Disconnect the injector intermediate connector.

**Caution**
**Never touch the connector terminal as approx. 100 V is applied to the injector, or you are seriously injured.**

(4) Earth the spark plug electrode securely.
(5) Check that the spark plug ignites when the engine is cranked.

OK ↓

Check all the following items: — OK → Check trouble symptom. — NG → Replace the injector.
- Spark plug
- EGR system
- Compression pressure
- Clogged fuel filter, fuel line

## Inspection procedure 14

| The feeling of impact when accelerating | Probable cause |
|---|---|
| The cause is probably an ignition leak being generated in line with an increase in the spark plug request voltage during acceleration. | • Malfunction of the ignition system |

**MUT-II Self-Diag code**
Is a diagnosis code displayed? — Yes → (Refer to P.13A-15, INSPECTION CHART FOR DIAGNOSIS CODES.)

No ↓

**MUT-II Data list**
79 Throttle position sensor (1st channel) (Refer to P.13A-105.) — NG → Check the throttle valve position feedback system. (Refer to P.13A-65, code No. P1221.)

OK ↓

Check ignition coil spark for each cylinder. — OK → Check all the following items:
(1) Remove the ignition coil.
(2) Install a new spark plug to the removed ignition coil.
(3) Disconnect the injector intermediate connector.

**Caution**
**Never touch the connector terminal as approx. 100 V is applied to the injector, or you are seriously injured.**

(4) Earth the spark plug electrode securely.
(5) Check that the spark plug ignites when the engine is cranked.

- Spark plug
- Ignition current leak

NG → Replace the ignition coil.

Purchased from www.WorkshopManuals.co.uk

www.WorkshopManuals.co.uk

## Inspection procedure 15

| The feeling of impact when decelerating | Probable cause |
|---|---|
| The cause is probably insufficient intake air due to a faulty electronic-controlled throttle valve system. | • Malfunction of the electronic-controlled throttle valve system |

**MUT-II Self-Diag code**
Is a diagnosis code displayed?
- Yes → (Refer to P.13A-15, INSPECTION CHART FOR DIAGNOSIS CODES.)
- No ↓

**MUT-II Data list**
79 Throttle position sensor (1st channel) (Refer to P.13A-105.)
- NG → Check the throttle valve position feedback system. (Refer to P.13A-65, code No. P1221.)
- OK ↓

**MUT-II Data list**
26 Accelerator pedal position switch (Refer to P.13A-105.)
- NG → Check the accelerator pedal position switch system. (Refer to P.13A-100, Inspection procedure 28.)
- OK ↓

Clean around the throttle valve. (Refer to P.13A-220.)

## Inspection procedure 16

| Knocking | Probable cause |
|---|---|
| The cause is probably incorrect detonation control or improper heat range of the spark plugs. | • Malfunction of the detonation sensor<br>• Improper heat range of the spark plugs |

**MUT-II Self-Diag code**
Is a diagnosis code displayed?
- Yes → (Refer to P.13A-15, INSPECTION CHART FOR DIAGNOSIS CODES.)
- No ↓

Does knocking occur when the vehicle is driven with the detonation sensor disconnected?
(At this time, use the MUT-II to check whether the ignition timing is retarded from when the detonation sensor connector is connected.)
- No → Check the detonation sensor system. (Refer to P.13A-56, code No. P0325.)
- Yes ↓

Check all the following items:
- Spark plug
- Foreign material (such as water or kerosine) entered the fuel lines

## Inspection procedure 17

| Run-on (dieseling) | Probable cause |
|---|---|
| The cause is probably fuel leak from injector(s) | • Malfunction of the injector |

Replace the injector.

Purchased from www.WorkshopManuals.co.uk

www.WorkshopManuals.co.uk

## Inspection procedure 18

| Too high CO and HC concentration when idling | Probable cause |
|---|---|
| The cause is probably an incorrect air/fuel ratio | • Malfunction of air/fuel ratio control system<br>• Deterioration of the catalyst |

**MUT-II Self-Diag code**
Is a diagnosis code displayed?
- Yes → (Refer to P.13A-15, INSPECTION CHART FOR DIAGNOSIS CODES.)
- No ↓

Check ignition timing. (Refer to GROUP 11A - Engine Adjustment.)
- NG → Check that the crank angle sensor and timing belt cover are properly installed.
- OK ↓

**MUT-II Data list**
21 Engine coolant temperature sensor (Refer to P.13A-105.)
- NG → Check the engine coolant temperature sensor. (Refer to P.13A-22, code No. P0115.)
- OK ↓

**MUT-II Data list**
13 Intake air temperature sensor (Refer to P.13A-105.)
- NG → Check the intake air temperature sensor. (Refer to P.13A-21, code No. P0110.)
- OK ↓

**MUT-II Data list**
25 Barometric pressure sensor (Refer to P.13A-105.)
- NG → Check the barometric pressure sensor. (Refer to P.13A-19, code No. P0105.)
- OK ↓

**MUT-II Data list**
59 Oxygen sensor (rear) (Refer to P.13A-78.)
- Transmission: 2nd gear
- Driving with throttle widely open

**OK:** 600 - 1,000 mV
- NG → Check the oxygen sensor (rear) system. (Refer to P.13A-31, code No. P0136.)
- OK ↓

**MUT-II Data list**
11 Oxygen sensor (front)
**OK:** 600 - 1,000 mV when the engine is suddenly raced
- NG → Check the oxygen sensor (front) system. (Refer to P.13A-31, code No. P0130.)
- OK ↓

**MUT-II Data list**
11 Oxygen sensor (front)
**OK:** 0 - 400 mV and 600 - 1,000 mV alternates when the engine is idling (wait for four minutes after the engine started).
- OK → Replace the oxygen sensor (front). → Check trouble symptom. → NG ↓
- NG ↓

Measure fuel high-pressure between the fuel pump (high pressure) and injector. (Refer to P.13A-224.)
- NG → **Repair**
- OK ↓

Check ignition coil spark for each cylinder.
(1) Remove the ignition coil.
(2) Install a new spark plug to the removed ignition coil.
(3) Disconnect the injector intermediate connector.

**Caution**
**Never touch the connector terminal as approx. 100 V is applied to the injector, or you are seriously injured.**

(4) Earth the spark plug electrode securely.
(5) Check that the spark plug ignites when the engine is cranked.
- OK ↓
- NG → Replace the ignition coil.

Check all the following items:
- Spark plug
- EGR system
- Compression pressure
- Clogged fuel filter or line

OK ↓

To the next page

Purchased from www.WorkshopManuals.co.uk

www.WorkshopManuals.co.uk

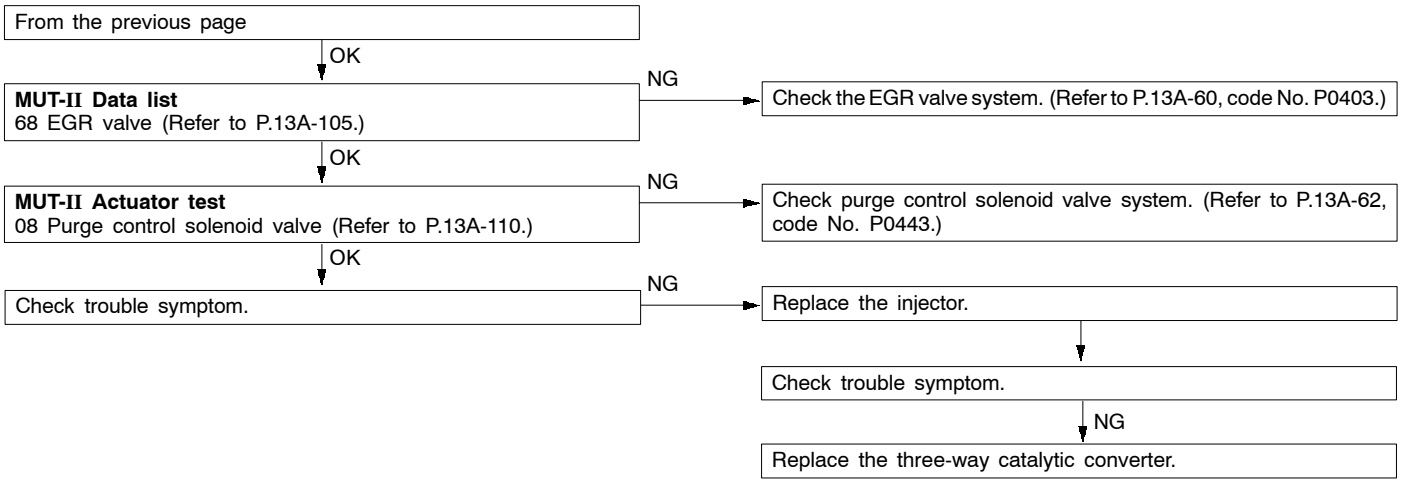


Purchased from www.WorkshopManuals.co.uk

www.WorkshopManuals.co.uk

## Inspection procedure 19

| Low alternator output voltage (approx. 12.3 V) | Probable cause |
|---|---|
| The cause is probably a malfunction of the alternator or one of the problems listed at right. | • Malfunction of the charging system<br>• Open circuit between the alternator G terminal and the engine-ECU<br>• Malfunction of the engine-ECU |

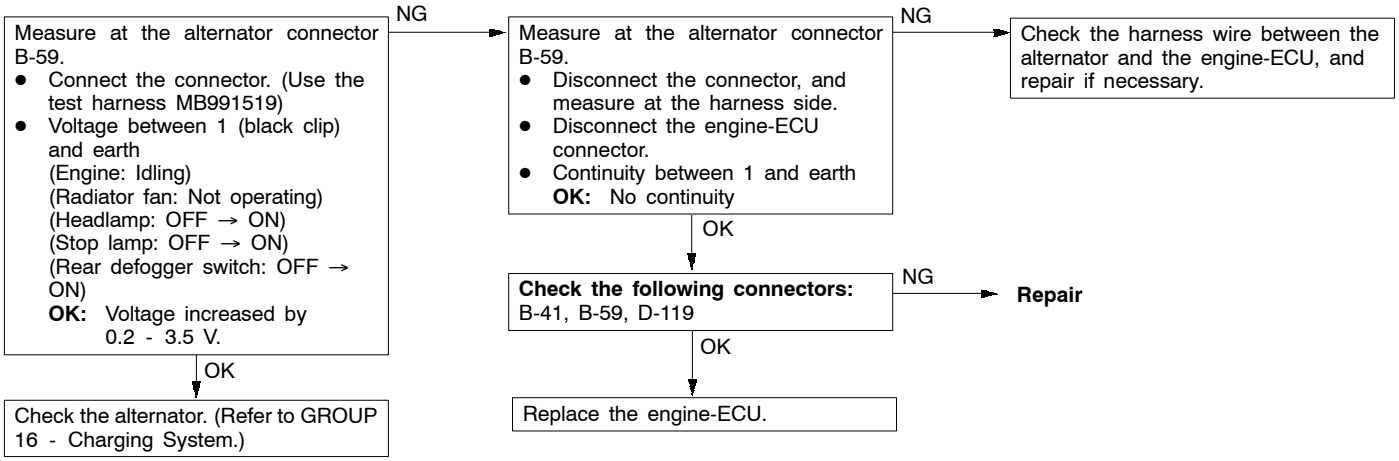


## Inspection procedure 20

| Idling speed is improper when A/C is operating | Probable cause |
|---|---|
| If the engine-ECU detects that the air conditioner is on, it activates the throttle control servo to control idle-up operation.<br>The A/C-ECU judges if the load caused by air conditioner operation is high or low, and converts it to voltage signal (high or low voltage) and inputs the signal to the engine-ECU.<br>Based on this voltage signal, the engine-ECU controls the idle-up speed (for high or low load). | • Malfunction of the A/C control system<br>• Improper connector contact, open circuit or short-circuited harness wire<br>• Malfunction of the engine-ECU |

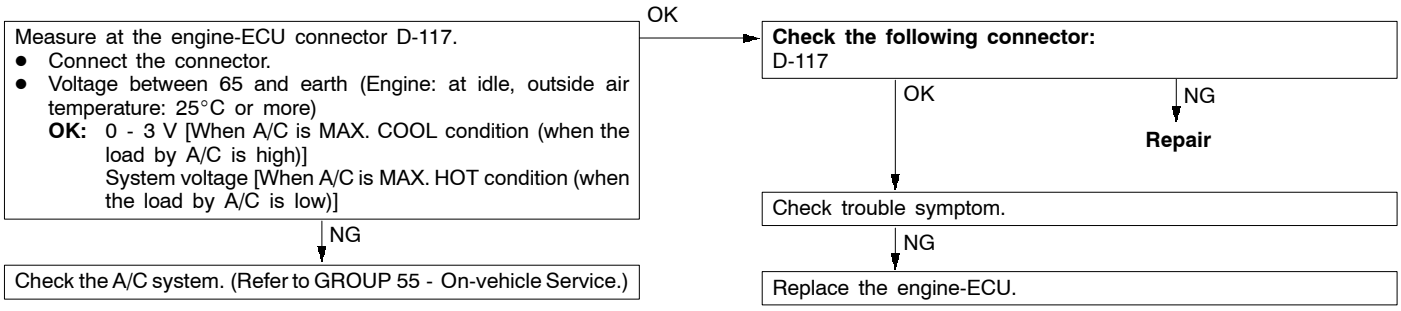


Purchased from www.WorkshopManuals.co.uk

www.WorkshopManuals.co.uk

## Inspection procedure 21

| A/C condenser fan is inoperative | Probable cause |
|---|---|
| The fan motor relay is controlled by turning on and off the power transistor in the engine-ECU. | • Malfunction of the A/C condenser fan relay.<br>• Malfunction of the condenser fan motor.<br>• Improper connector contact, open circuit or short-circuited harness wire<br>• Malfunction of the engine-ECU |

Measure at the engine-ECU connector D-116.
- Disconnect the connector, and measure at the harness side.
- Check condition of the condenser fan.
  (Ignition switch: ON)
  **OK:** Fan stops.
- The voltage between 18 and earth
  (Ignition switch: ON)
  **OK:** System voltage
- Connect a jumper cable between 18 and earth.
  (Ignition switch: ON)
  **OK:** A/C condenser fan rotates.

NG → Check the condenser fan circuit. (Refer to ELECTRICAL WIRING)

OK ↓

**Check the following connector:** D-116

NG → **Repair**

OK ↓

Check the trouble symptoms.

NG ↓

Replace the engine-ECU.

Purchased from www.WorkshopManuals.co.uk

www.WorkshopManuals.co.uk

## Inspection procedure 22

| Clutch switch system malfunction | Probable cause |
|---|---|
| The clutch pedal switch sends a signal indicating clutch pedal depression to the engine-ECU. The engine-ECU controls the fuel injection properly according to this signal, thus prevents the fluctuation of the engine speed during shift change. | • Malfunction of the clutch switch<br>• Open circuit or short-circuited harness wire in the clutch switch circuit<br>• Malfunction of the engine-ECU |

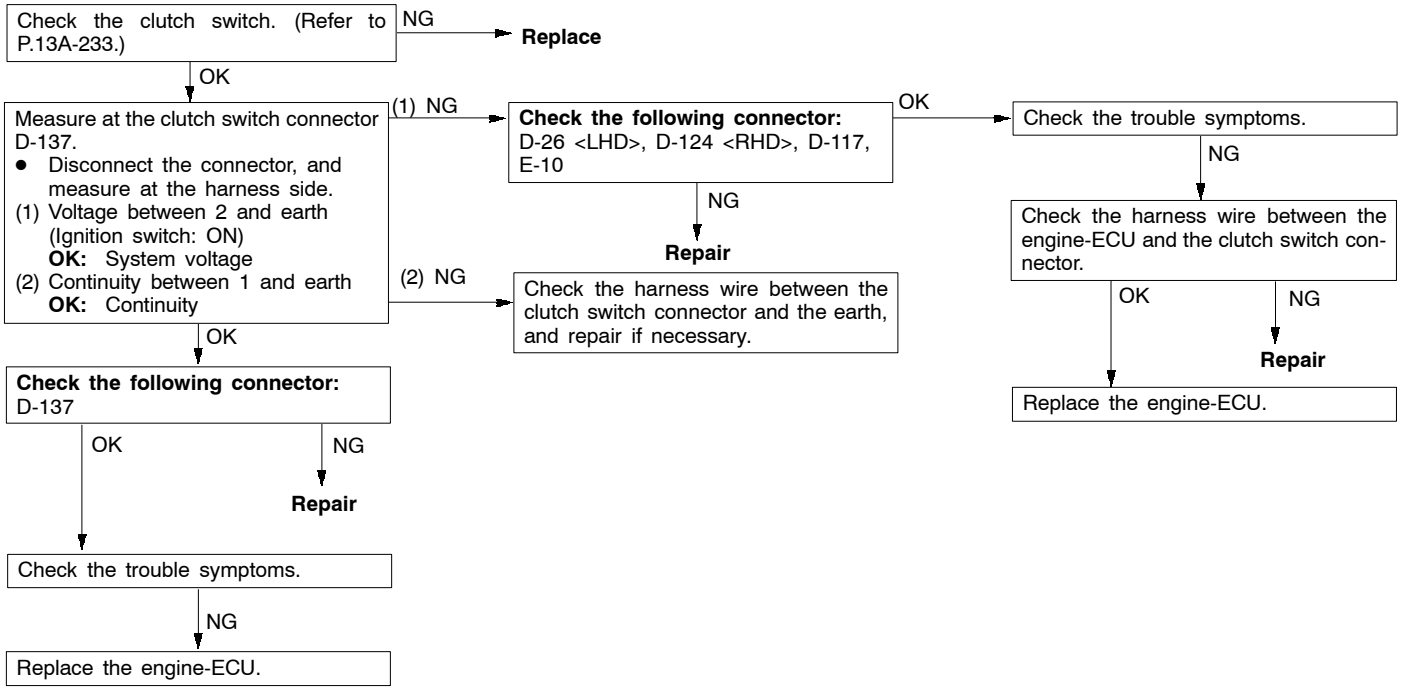


## Inspection procedure 23

| GDI ECO indicator lamp does not illuminate. | Probable cause |
|---|---|
| If the GDI ECO indicator lamp does not illuminate after turning switch, the causes listed in the right column are suspected. | • Burned-out GDI ECO indicator lamp bulb<br>• Open circuit or short-circuited harness wire in the GDI ECO indicator lamp circuit<br>• Malfunction of the engine-ECU<br>• Malfunction of the GDI ECO indicator lamp-ECU |

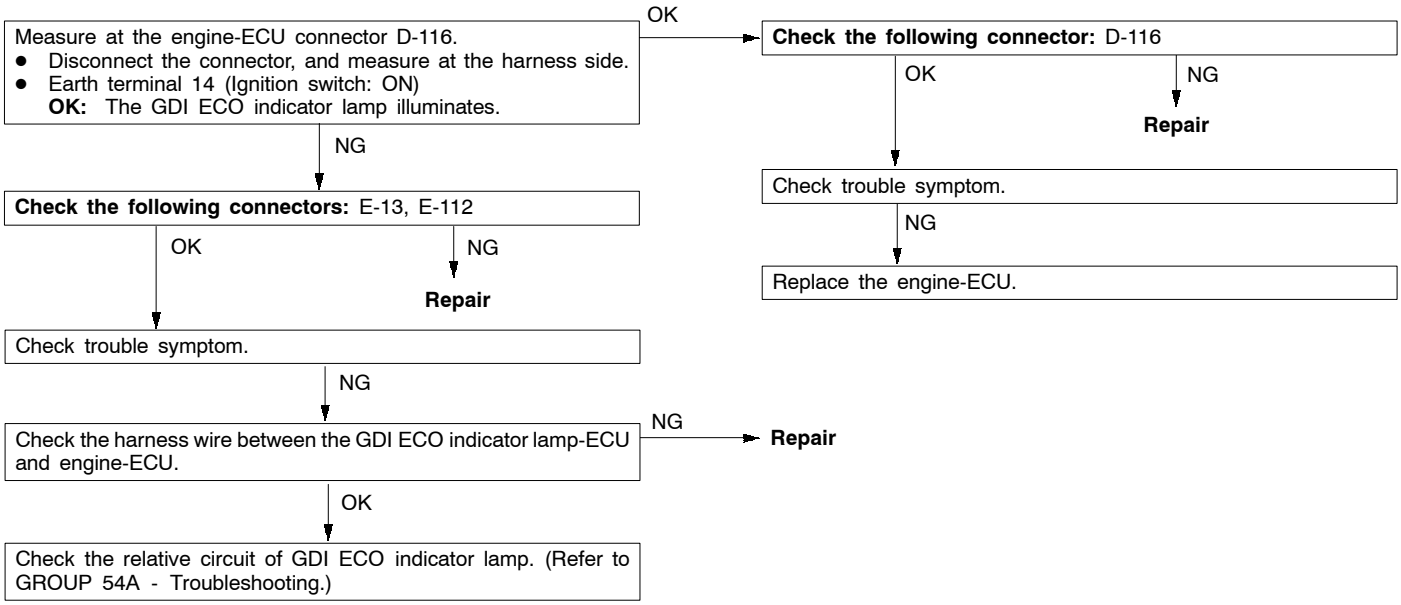


Purchased from www.WorkshopManuals.co.uk

www.WorkshopManuals.co.uk

## Inspection procedure 24

| GDI ECO indicator lamp remains illuminated and does not go off. | Probable cause |
|---|---|
| If the GDI ECO indicator lamp does not go off during high load operation, the causes listed in the right column are suspected. | • Short circuit between the GDI ECO indicator lamp and engine-ECU<br>• Malfunction of the engine-ECU<br>• Malfunction of the GDI ECO indicator lamp-ECU |

Measure at GDI ECO indicator lamp-ECU connector E-112.
- Disconnect the connector, and measure at the harness side.
- Disconnect the engine-ECU connector.
- Continuity between terminal 3 and earth

**OK:** No continuity

NG → Check the harness wire between the GDI ECO indicator lamp-ECU and engine-ECU, and repair if necessary.

OK ↓

Check the relative circuit of GDI ECO indicator lamp. (Refer to GROUP 54A - Troubleshooting.)

OK ↓

Replace the engine-ECU.

Purchased from www.WorkshopManuals.co.uk

www.WorkshopManuals.co.uk

## Inspection procedure 25

| Engine-ECU power supply and earth circuit system | Probable cause |
|---|---|
| The cause is probably a malfunction of the engine-ECU or one of the problems listed at right. | • Open circuit or short-circuited harness wire in the engine-ECU power supply circuit<br>• Open circuit or short-circuited harness wire in the engine-ECU earth circuit<br>• Malfunction of the engine-ECU |

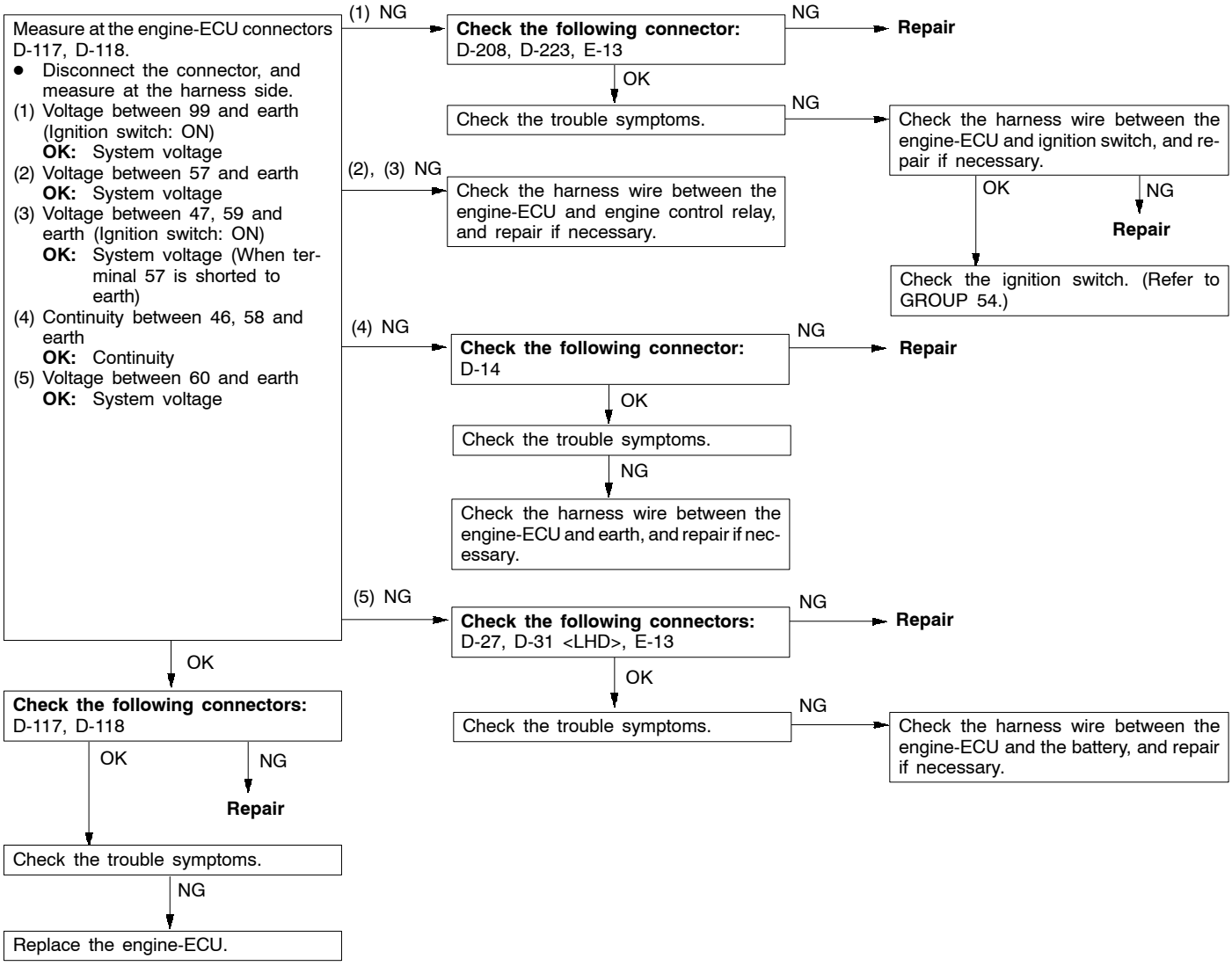


Purchased from www.WorkshopManuals.co.uk

www.WorkshopManuals.co.uk

## Inspection procedure 26

| Engine control relay and ignition switch-IG system | Probable cause |
|---|---|
| When the ignition switch ON signal is input to the engine-ECU, the engine-ECU turns on the engine control relay.<br>This causes system voltage to be supplied to the engine-ECU and to the sensors and actuators. | • Malfunction of the ignition switch<br>• Malfunction of the engine control relay<br>• Open circuit or short-circuited harness wire of the engine control relay circuit<br>• Malfunction of the engine-ECU |

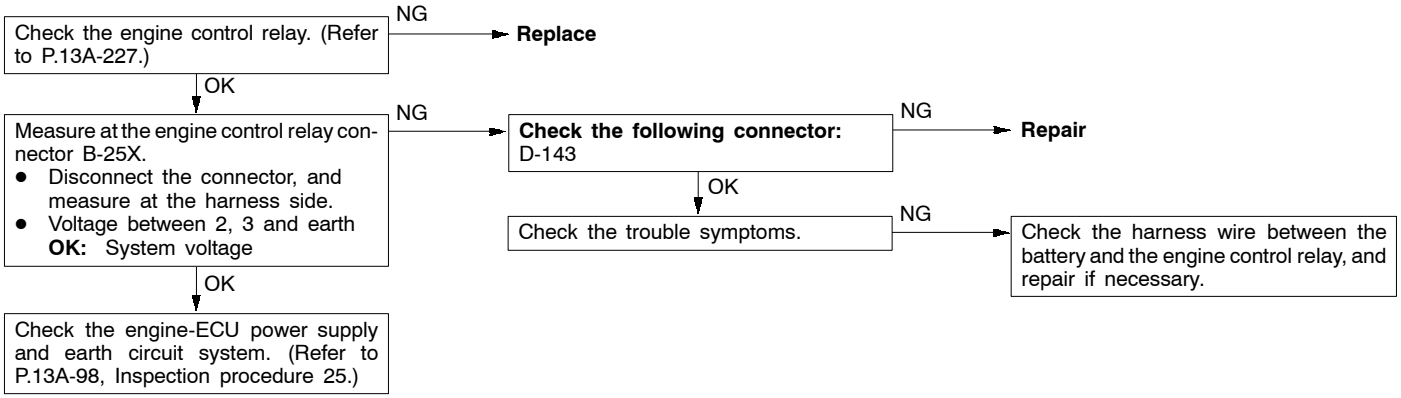


## Inspection procedure 27

| Ignition switch-ST system | Probable cause |
|---|---|
| The ignition switch-ST outputs a HIGH signal to the engine-ECU while the engine is cranking.<br>The engine-ECU uses this signal to carry out functions such as fuel injection control during starting. | • Malfunction of the ignition switch<br>• Open circuit or short-circuited harness wire of the ignition switch circuit<br>• Malfunction of the engine-ECU |

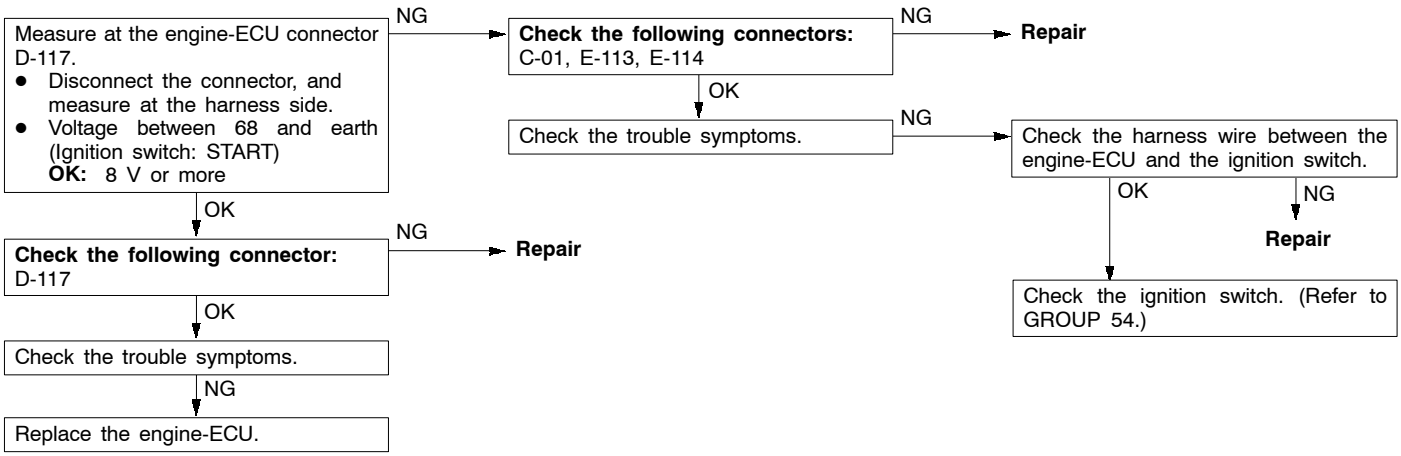


Purchased from www.WorkshopManuals.co.uk

www.WorkshopManuals.co.uk

## Inspection procedure 28

| Accelerator pedal position switch system | Probable cause |
|---|---|
| The accelerator pedal position switch detects that the accelerator pedal is fully closed, and sends a signal to the engine-ECU. The engine-ECU controls idle speed, based on this signal. | • Maladjustment of the accelerator cable<br>• Maladjustment of the accelerator pedal position switch<br>• Open circuit or short-circuited harness wire in the accelerator pedal position switch system, or poor connector contact<br>• Malfunction of the engine-ECU |

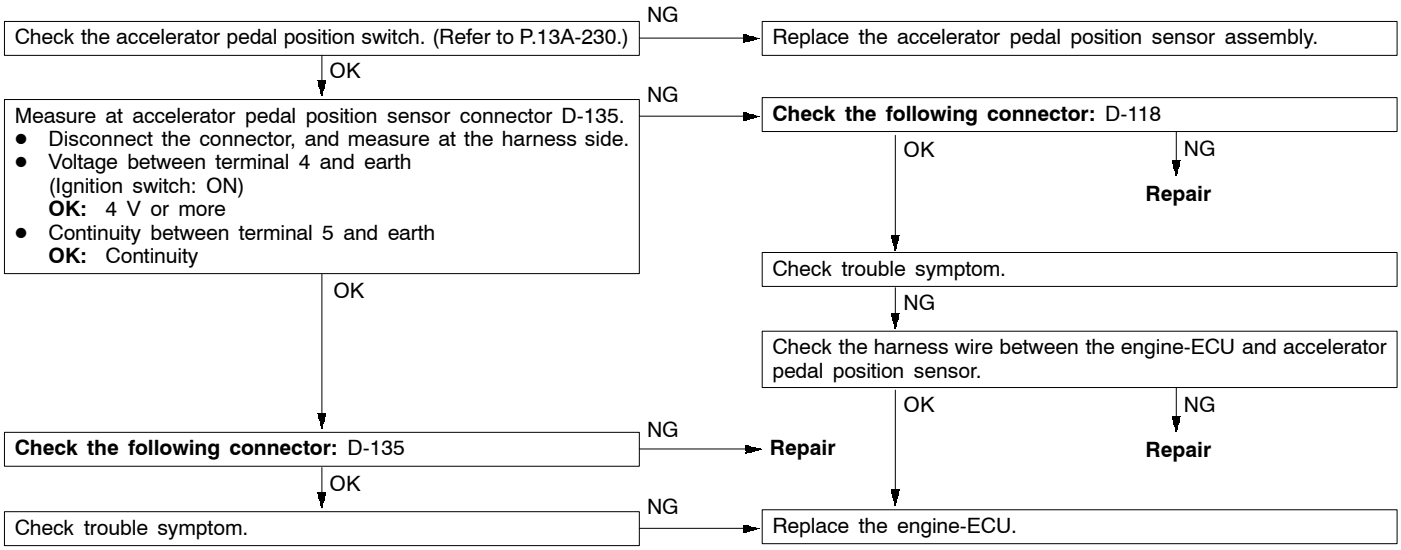


Purchased from www.WorkshopManuals.co.uk

www.WorkshopManuals.co.uk

## Inspection procedure 29

| Fuel pump (low pressure) system | Probable cause |
|---|---|
| The engine-ECU turns on the fuel pump relay while the engine is cranking or running, and supplies power source to the fuel pump (low pressure). | • Malfunction of the fuel pump relay<br>• Malfunction of the fuel pump (low pressure)<br>• Open circuit or short-circuited harness wire in the fuel pump (low pressure) circuit, or poor connector contact<br>• Malfunction of the engine-ECU |

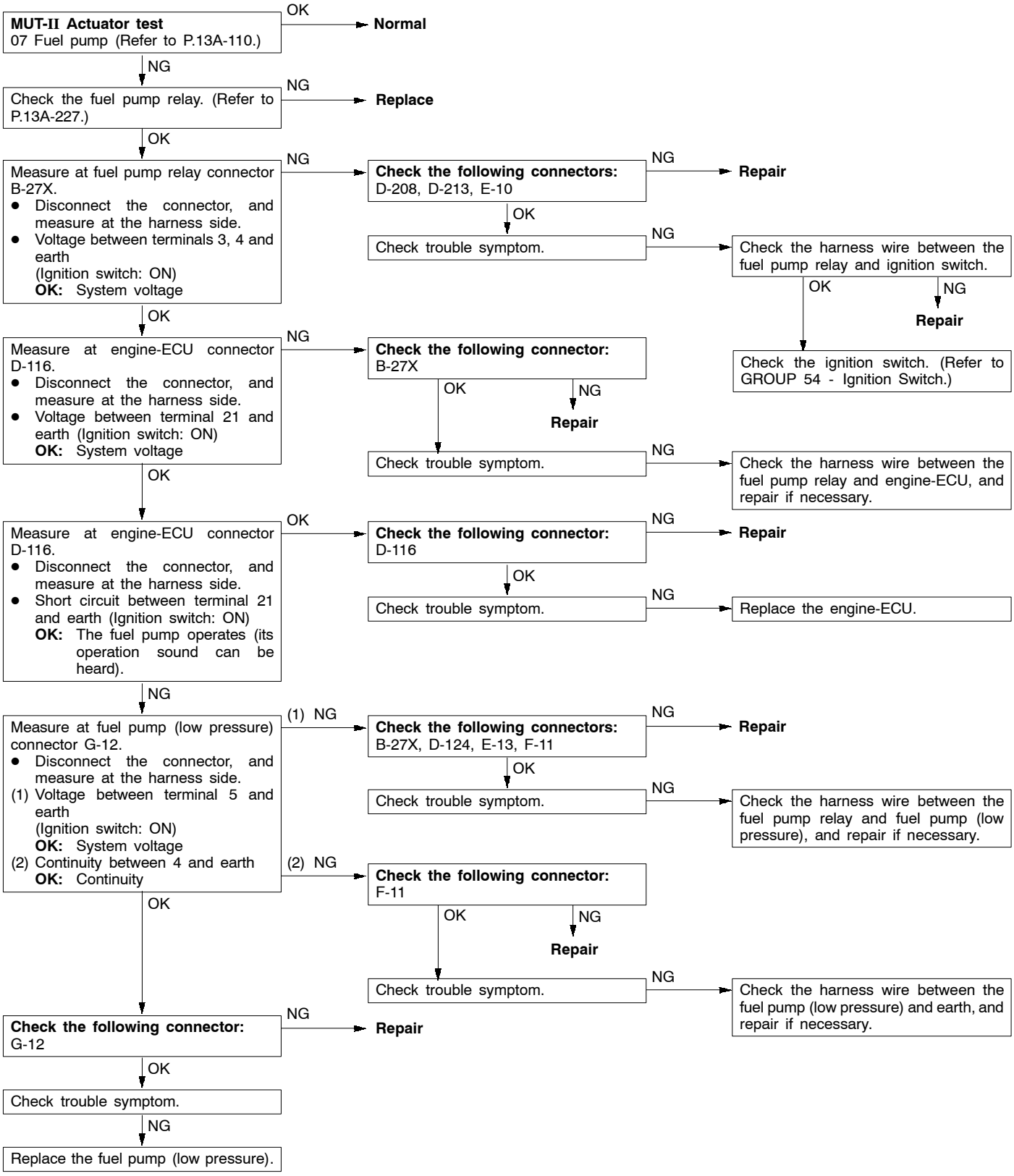


Purchased from www.WorkshopManuals.co.uk

www.WorkshopManuals.co.uk

## Inspection procedure 30

| Power steering fluid pressure switch system | Probable cause |
|---|---|
| The power steering fluid pressure switch sends a signal to the engine-ECU according to power steering load.<br>Based on this signal, the engine-ECU controls the throttle control servo so that idle speed increases when the power steering is in operation. | • Malfunction of the power steering fluid pressure switch<br>• Open circuit or short-circuited harness wire in the power steering fluid pressure switch circuit, or poor connector contact<br>• Malfunction of the engine-ECU |

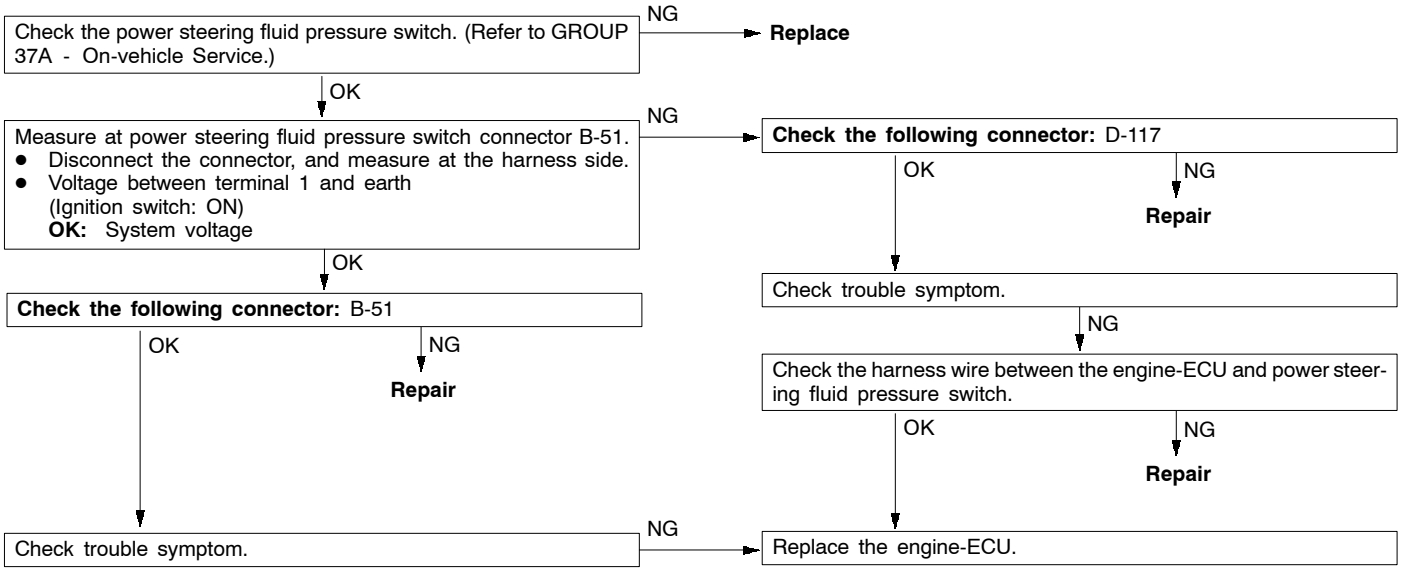


## Inspection procedure 31

| A/C switch and A/C relay system | Probable cause |
|---|---|
| If the engine-ECU receives a 'A/C on' signal, it operates the throttle control servo and A/C compressor magnetic clutch so that idle speed increases. | • Malfunction of the A/C control system<br>• Malfunction of the A/C switch<br>• Open circuit or short-circuited harness wire in the A/C switch circuit, or poor connector contact<br>• Malfunction of the engine-ECU |

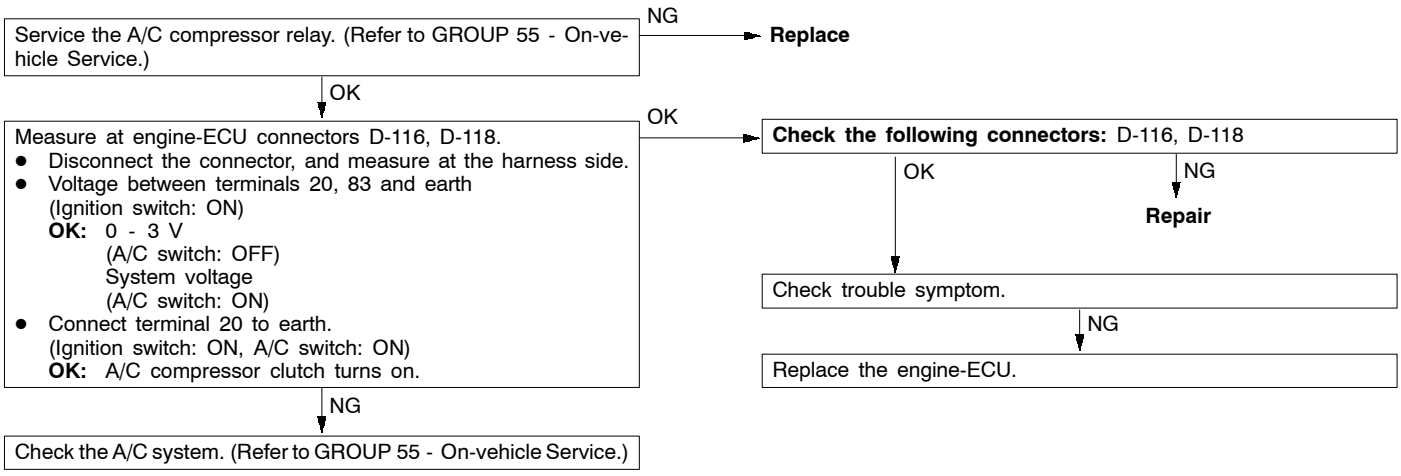


Purchased from www.WorkshopManuals.co.uk

www.WorkshopManuals.co.uk

## Inspection procedure 32

| Stop lamp switch system | Probable cause |
|---|---|
| The engine-ECU determines whether the brake pedal is depressed or not, by means of the stop lamp switch input signal. | • Malfunction of the stop lamp switch<br>• Open circuit or short-circuited harness wire in the stop lamp circuit, or poor connector contact<br>• Malfunction of the engine-ECU |

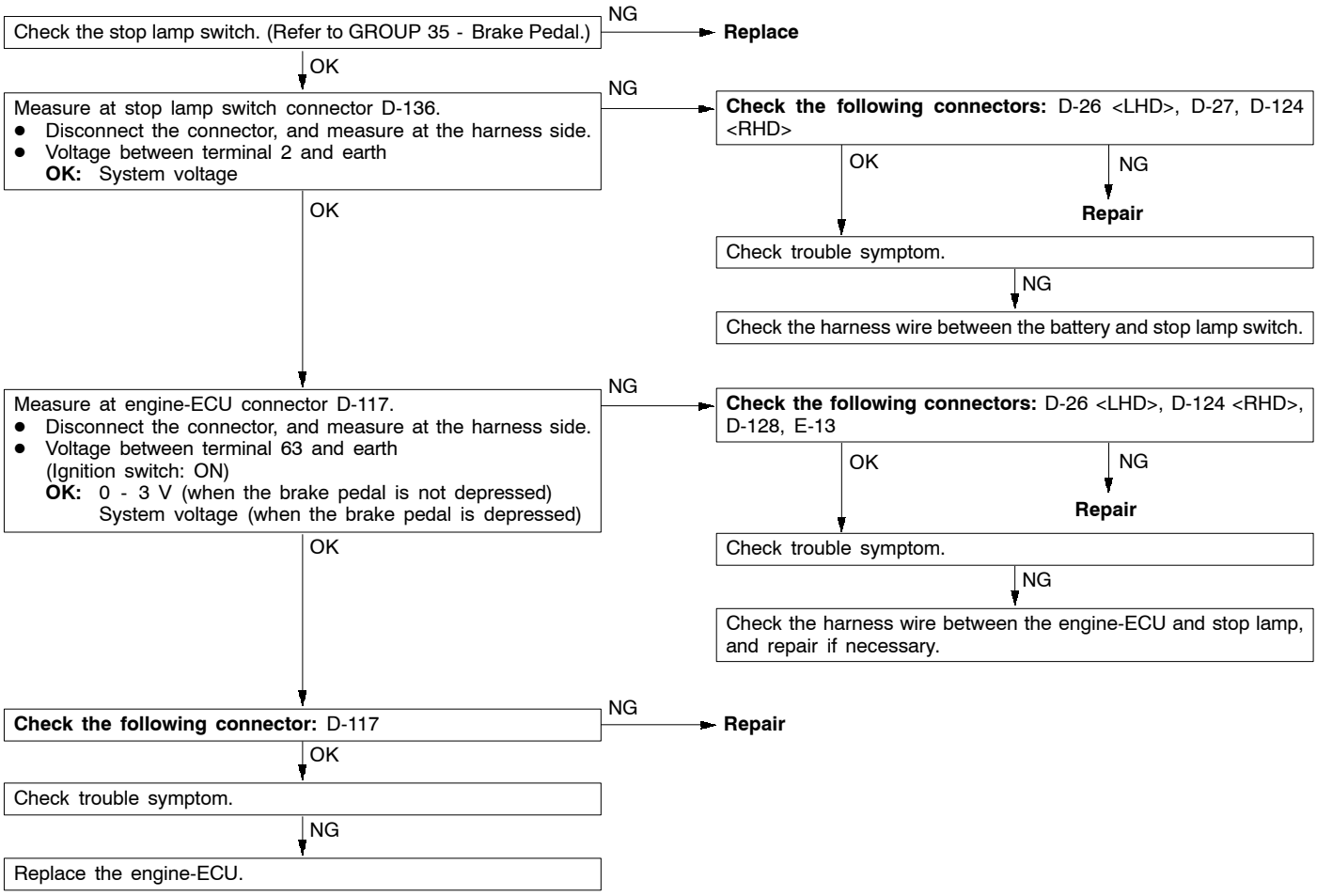


Purchased from www.WorkshopManuals.co.uk

www.WorkshopManuals.co.uk

## Inspection procedure 33

| Small lamp switch system | Probable cause |
|---|---|
| The engine-ECU determines whether the small lamp switch is on or off. According to that information, the engine-ECU controls alternator output current when the vehicle is started. | • Improper connector contact, open circuit or short-circuited harness wire in the taillamp circuit<br>• Malfunction of the engine-ECU |

Measure at the engine-ECU connector D-118.
- Disconnect the connector, and measure at the harness side.
- Voltage between 88 and earth (Lighting switch: ON)

**OK:** System voltage

NG → Check the taillamp circuit. (Refer to ELECTRICAL WIRING.)

OK ↓

**Check the following connector:** D-118

NG → **Repair**

OK ↓

Check the trouble symptoms.

NG ↓

Replace the engine-ECU.

## Inspection procedure 34

| Injector driver system | Probable cause |
|---|---|
| The engine-ECU drives the injector by the drive signal. | • Malfunction of the injector driver<br>• Improper connector contact, open circuit or short-circuited harness wire<br>• Malfunction of the engine-ECU |

**Check the following connectors:** B-121, D-116

NG → **Repair**

OK ↓

Check the harness wire between the injector driver and engine-ECU.

NG → **Repair**

OK ↓

Use a analyzer to measure the signal waveform at the engine-ECU connectors D-116 and D-118.
- Engine: idling
- Voltage between 96 and earth, and between 1 and earth

**OK:** A normal waveform should be displayed as described on P.13A-118 (INSPECTION PROCEDURE USING AN ANALYZER).

NG → Replace the injector driver.

OK ↓

Check the trouble symptoms.

OK → Transient malfunction (Refer to GROUP 00 - Points to Note for Intermittent Malfunctions.)

NG ↓

Replace the engine-ECU.

Purchased from www.WorkshopManuals.co.uk

www.WorkshopManuals.co.uk

## DATA LIST REFERENCE TABLE

**Caution**
**When shifting the select lever to D range, the brakes should be applied so that the vehicle does not move forward.**

NOTE
*1: Within four minutes after starting the engine
*2: In a new vehicle [driven approximately 500 km or less], the injector drive time is sometimes 10% longer than the standard time.
*3: The accelerator pedal position switch normally turns off when the voltage of the accelerator pedal position sensor (1st channel) is 200 - 600 mV higher than the voltage at the idle position. If the accelerator pedal position switch turns back on after the accelerator pedal position sensor voltage has risen by 100 mV and the throttle valve has opened, the accelerator pedal position switch and the accelerator pedal position sensor (1st channel) need to be adjusted.

| Item No. | Check items | Requirements | | Normal condition | Inspection procedure No. | Reference page |
|---|---|---|---|---|---|---|
| 11 | Oxygen sensor (front) | Engine: After warm-up | Idling | 200 mV or less*1 | Code No. P0130 | 13A-28 |
| | | | Sudden racing | 600 - 1,000 mV | | |
| | | | 2,500 r/min | 400 mV or less and 600 - 1,000 mV alternates. | | |
| 12 | Air flow sensor | • Engine coolant temperature: 80 - 95°C<br>• Lamps, electric cooling fan and all accessories: OFF<br>• Transmission: Neutral | Idling | 22 - 48 Hz | Code No. P0100 | 13A-17 |
| | | | 2,500 r/min | 60 - 100 Hz | | |
| | | | Racing | Frequency increases in response to racing. | | |
| 13 | Intake air temperature sensor | Ignition switch: ON | Intake air temperature: -20°C | -20°C | Code No. P0110 | 13A-21 |
| | | | Intake air temperature: 0°C | 0°C | | |
| | | | Intake air temperature: 20°C | 20°C | | |
| | | | Intake air temperature: 40°C | 40°C | | |
| | | | Intake air temperature: 80°C | 80°C | | |

Purchased from www.WorkshopManuals.co.uk

www.WorkshopManuals.co.uk

| Item No. | Check items | Requirements | | Normal condition | Inspection procedure No. | Reference page |
|---|---|---|---|---|---|---|
| 14 | Throttle position sensor (2nd channel) | • Engine coolant temperature: 80 - 95°C<br>• Ignition switch: ON (Engine stopped) | Release the accelerator pedal. | 4,000 mV or more | Code No. P0225 | 13A-52 |
| | | | Depress the accelerator pedal gradually. | Voltage decreases in response to the pedal depression. | | |
| | | | Depress the accelerator pedal fully. | 400 - 600 mV | | |
| 16 | Power supply voltage | Ignition switch: ON | | System voltage | Procedure No.25 | 13A-98 |
| 18 | Cranking signal (Ignition switch - ST) | Transmission: Neutral | Engine: Stopped | OFF | Procedure No.27 | 13A-99 |
| | | | Engine: Cranking | ON | | |
| 21 | Engine coolant temperature sensor | Ignition switch: ON | Engine coolant temperature: -20°C | -20°C | Code No. P0115 | 13A-22 |
| | | | Engine coolant temperature: 0°C | 0°C | | |
| | | | Engine coolant temperature: 20°C | 20°C | | |
| | | | Engine coolant temperature: 40°C | 40°C | | |
| | | | Engine coolant temperature: 80°C | 80°C | | |
| 22 | Crank angle sensor | • Engine: cranking<br>• Tachometer: Connected | Compare the engine speed readings on the tachometer and the MUT-II. | Accord | Code No. P0335 | 13A-56 |
| | | • Engine: Idling<br>• Accelerator pedal position switch: ON | Engine coolant temperature: -20°C | 1,250 - 1,450 r/min | | |
| | | | Engine coolant temperature: 0°C | 1,100 - 1,300 r/min | | |
| | | | Engine coolant temperature: 20°C | 1,000 - 1,200 r/min | | |
| | | | Engine coolant temperature: 40°C | 900 - 1,100 r/min | | |
| | | | Engine coolant temperature: 80°C | 550 - 650 r/min*1 | | |

Purchased from www.WorkshopManuals.co.uk

www.WorkshopManuals.co.uk

| Item No. | Check items | Requirements | | Normal condition | Inspection procedure No. | Reference page |
|---|---|---|---|---|---|---|
| 25 | Barometric pressure sensor | Ignition switch: ON | Altitude: 0 m | 101 kPa | Code No. P0105 | 13A-19 |
| | | | Altitude: 600 m | 95 kPa | | |
| | | | Altitude: 1,200 m | 88 kPa | | |
| | | | Altitude: 1,800 m | 81 kPa | | |
| 26 | Accelerator pedal position switch | Ignition switch: ON (Depress and release the accelerator pedal several times) | Release the accelerator pedal. | ON | Procedure No.28 | 13A-100 |
| | | | Depress the accelerator pedal slightly. | OFF | | |
| 27 | Power steering fluid pressure switch | Engine: Idling | Steering wheel stationary | OFF | Procedure No.30 | 13A-102 |
| | | | Steering wheel turning | ON | | |
| 28 | A/C switch | Engine: Idling (The A/C compressor is running when the A/C switch is on.) | A/C switch: OFF | OFF | Procedure No.31 | 13A-100 |
| | | | A/C switch: ON | ON | | |
| 31 | Small lamp switch | Engine: Idling | Lighting switch: OFF | OFF | Procedure No.33 | 13A-104 |
| | | | Lighting switch: ON | ON | | |
| 34 | Air flow sensor reset signal | Engine: After having warmed up | Engine is idling | ON | Code No. P0100 | 13A-17 |
| | | | 3,000 r/min | OFF | | |
| 37 | Volumetric efficiency | • Engine coolant temperature: 80 - 95°C<br>• Lamps, electric cooling fan and all accessories: OFF<br>• Transmission: Neutral | Engine is idling | 20 - 40% | - | - |
| | | | 2,500 r/min | 10 - 30% | | |
| | | | Engine is suddenly raced | Volumetric efficiency increases in response to racing | | |
| 38 | Crank angle sensor | • Engine: Cranking [reading is possible at 2,000 r/min or less]<br>• Tachometer: Connected | | Engine speeds displayed on the MUT-II and tachometer are identical. | - | - |

Purchased from www.WorkshopManuals.co.uk

www.WorkshopManuals.co.uk

| Item No. | Check items | Requirements | | Normal condition | Inspection procedure No. | Reference page |
|---|---|---|---|---|---|---|
| 41 | Injector drive time *2 | • Engine coolant temperature: 80 - 95°C<br>• Lamps, electric cooling fan and all accessories: OFF<br>• Transmission: Neutral | Idling | 0.3 - 0.8 ms*1 | - | - |
| | | | 2,500 r/min | 0.4 - 1.0 ms | | |
| | | | Sudden racing | Increases | | |
| 44 | Ignition advance | • Engine: After warm-up<br>• Set a timing light. | Idling | 5 - 20°BTDC *1 | Code No. P0300 | 13A-53 |
| | | | 2,500 r/min | 15 - 35°BTDC | | |
| 49 | A/C relay | Engine: After warm-up, idling | A/C switch: OFF | OFF (compressor clutch is not operating) | Procedure No.31 | 13A-102 |
| | | | A/C switch: ON | ON (compressor clutch is operating) | | |
| 59 | Oxygen sensor (rear) | • Transmission: 2nd gear<br>• Drive with throttle widely open | 3,500 r/min | 600 - 1,000 mV | Code No. P0136 | 13A-31 |
| 67 | Stop lamp switch | Ignition switch: ON | Brake pedal: Depressed | OFF | Procedure No.32 | 13A-103 |
| | | | Brake pedal: Released | ON | | |
| 68 | EGR valve | • Engine coolant temperature: 80 - 95°C<br>• Lamps, electric cooling fan and all accessories: OFF<br>• Transmission: Neutral | Idling | 2 - 20 STEP | Code No. P0403 | 13A-60 |
| | | | 2,500 r/min | 0 - 10 STEP | | |
| 74 | Fuel pressure sensor | • Engine coolant temperature: 80 - 95°C<br>• Lamps, electric cooling fan and all accessories: OFF<br>• Transmission: Neutral | Engine: Idling | 4 - 6.9 MPa | Code No. P0190 | 13A-36 |

Purchased from www.WorkshopManuals.co.uk

www.WorkshopManuals.co.uk

| Item No. | Check items | Requirements | | Normal condition | Inspection procedure No. | Reference page |
|---|---|---|---|---|---|---|
| 77 | Accelerator pedal position sensor (2nd channel) | Ignition switch: ON | Release the accelerator pedal. | 985 - 1085 mV | Code No.P1225 | 13A-68 |
| | | | Depress the accelerator pedal gradually. | Increases in response to the pedal depression stroke. | | |
| | | | Depress the accelerator pedal fully. | 4,000 mV or more | | |
| 78 | Accelerator pedal position sensor (1st channel) *3 | Ignition switch: ON | Release the accelerator pedal. | 985 - 1085 mV | Code No.P0220 | 13A-50 |
| | | | Depress the accelerator pedal gradually. | Increases in response to pedal depression stroke. | | |
| | | | Depress the accelerator pedal fully. | 4,200 - 4,800 mV | | |
| 79 | Throttle position sensor (1st channel) | • Engine coolant temperature: 80 - 95°C<br>• Ignition switch: ON (Engine stopped) | Release the accelerator pedal. | 400 - 800 mV | Code No.0120 | 13A-25 |
| | | | Depress the accelerator pedal gradually. | Increases in response to pedal depression stroke. | | |
| | | | 4,600 - 5,200 mV | 4,200 - 4,800 mV | | |
| | | Engine: After warm-up, idling | No load | 450 - 1,000 mV | | |
| | | | A/C switch: OFF → ON | Increases by 100 - 600 mV. | | |
| 99 | Fuel injection mode | Engine: After warm up | Idling (after four minutes or more have passed since engine start) | Lean compression | - | - |
| | | | 2,500 r/min | Stoichiometric metric feedback | | |
| | | | Sudden racing after idle position | Open loop | | |

Purchased from www.WorkshopManuals.co.uk

www.WorkshopManuals.co.uk

## ACTUATOR TEST REFERENCE TABLE

| Item No. | Inspection item | Drive contents | Inspection contents | Normal condition | Inspection procedure No. | Reference page |
|---|---|---|---|---|---|---|
| 01 | Injectors | Cut fuel to No. 1 injector | Engine: After having warmed up/Engine is idling (Cut the fuel supply to each injector in turn and check cylinders which don't affect idling.) | Idling condition becomes different (becomes unstable). | Code No. P0201 | 13A-38 |
| 02 | | Cut fuel to No. 2 injector | | | Code No. P0202 | 13A-40 |
| 03 | | Cut fuel to No. 3 injector | | | Code No. P0203 | 13A-42 |
| 04 | | Cut fuel to No. 4 injector | | | Code No. P0204 | 13A-44 |
| 05 | | Cut fuel to No. 5 injector | | | Code No. P0205 | 13A-46 |
| 06 | | Cut fuel to No. 6 injector | | | Code No. P0206 | 13A-48 |
| 07 | Fuel pump (low pressure) | Fuel pump operates and fuel is recirculated. | Ignition switch: ON | Sound of operation is heard. | Procedure No. 29 | 13A-101 |
| 08 | Purge control solenoid valve | Solenoid valve turns from OFF to ON. | Ignition switch: ON | Sound of operation can be heard when solenoid valve is driven. | Code No. P0443 | 13A-62 |
| 17 | Basic ignition timing | Set the engine-ECU to ignition timing adjustment mode | Idling after engine warm up | 5°BTDC | - | - |
| 21 | Condenser fan | Drive the fan motor | Ignition switch: ON | The fan motor operates | Procedure No.21 | 13A-95 |
| 34 | Electronic-controlled throttle valve system | Stop the throttle control servo. | Ignition switch: ON | Throttle valve is opened slightly. | Code No. P1220 | 13A-64 |

Purchased from www.WorkshopManuals.co.uk

www.WorkshopManuals.co.uk

## CHECK AT THE ENGINE-ECU TERMINALS

### TERMINAL VOLTAGE CHECK CHART

### Engine-ECU Connector Terminal Arrangement

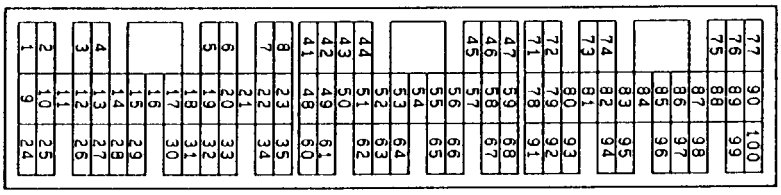


7FU2119

| Terminal No. | Check item | Check requirements (engine condition) | Normal condition |
|---|---|---|---|
| 1 | No.1 injector | Engine: Warm up, and then depress the accelerator pedal suddenly from the idle speed. | Decreases slightly for short time from 9 - 13 V. |
| 9 | No.2 injector | | |
| 24 | No.3 injector | | |
| 2 | No.4 injector | | |
| 10 | No.5 injector | | |
| 25 | No.6 injector | | |
| 3 | No.1 ignition coil | Engine: 3,000 r/min | 0.3 - 3.0 V. |
| 12 | No.2 ignition coil | | |
| 26 | No.3 ignition coil | | |
| 4 | No.4 ignition coil | | |
| 13 | No.5 ignition coil | | |
| 27 | No.6 ignition coil | | |
| 5 | EGR valve (D) | Ignition switch: Immediately after turning ON | 5 - 8 V (fluctuates for approx. three seconds) |
| 6 | EGR valve (C) | | |
| 32 | EGR valve (B) | | |
| 34 | EGR valve (A) | | |
| 8 | Alternator G terminal | • Engine: Warm up, and then idling<br>• Radiator fan: not operating<br>• Headlamp: OFF → ON<br>• Stop lamp: OFF → ON<br>• Rear defogger switch: OFF → ON | Voltage increases by 0.2 - 3.5 V |
| 14 | GDI ECO indication lamp | Ignition switch: OFF → ON | 0 - 3 V (system voltage after five seconds) |
| | | Engine: When the accelerator pedal is suddenly depressed while the engine is idling | System voltage |

Purchased from www.WorkshopManuals.co.uk

www.WorkshopManuals.co.uk

| Terminal No. | Check item | Check requirements (engine condition) | | Normal condition |
|---|---|---|---|---|
| 16 | Purge control solenoid valve | • Engine coolant temperature: 80 - 95°C<br>• Ignition switch: ON | Engine: stopped | System voltage |
| | | | Engine: Start the engine, and then increase engine speed up to 3,500 r/min. | Voltage decreases. |
| 18 | Condenser fan relay | Condenser fan is not operating. | | System voltage |
| | | Condenser fan is operating. | | 0 - 3 V |
| 20 | Fuel pump relay | Ignition switch: ON | Engine: stopped | System voltage |
| | | | Engine: idling | 0 - 3 V |
| 21 | A/C relay | • Engine: idling<br>• A/C switch: OFF → ON (Compressor is operating) | | System voltage, or changes from momentarily 6 V or more to 0 → 3 V |
| 31 | Engine warning lamp | Ignition switch: OFF → ON | | 0 - 3 V → System voltage (after several seconds) |
| 41 | Sensor power supply | Ignition switch: ON | | 4.5 - 5.5 V |
| 42 | Power supply to accelerator pedal position sensor (1st channel) | Ignition switch: ON | | 4.5 - 5.5 V |
| 43 | Crank angle sensor | Engine: Cranking | | 0.4 - 4.0 V |
| | | Engine: Idling | | 1.5 - 2.5 V |
| 44 | Engine coolant temperature sensor | Ignition switch: ON | Engine coolant temperature: 0 °C | 3.2 - 3.5 V |
| | | | Engine coolant temperature: 20 °C | 2.3 - 2.9 V |
| | | | Engine coolant temperature: 40 °C | 1.5 - 2.1 V |
| | | | Engine coolant temperature: 80 °C | 0.4 - 1.0 V |
| 45 | Engine ignition signal | Engine: 3,000 r/min | | 0.3 - 3.0 V |

Purchased from www.WorkshopManuals.co.uk

www.WorkshopManuals.co.uk

| Terminal No. | Check item | Check requirements (engine condition) | | Normal condition |
|---|---|---|---|---|
| 47 | Power supply | Ignition switch: ON | | System voltage |
| 59 | | | | |
| 50 | Camshaft position sensor | Engine: Cranking | | 0.4 - 3.0 V |
| | | Engine: Idling | | 0.5 - 2.0 V |
| 51 | Barometric pressure sensor | Ignition switch: ON | Altitude: 0 m | 3.7 - 4.3 V |
| | | | Altitude: 1,200 m | 3.2 - 3.8 V |
| 52 | Alternator FR terminal | ● Engine: Warm up, and then idling<br>● Radiator fan: not operating<br>● Headlamp: OFF → ON<br>● Stop lamp: OFF → ON<br>● Rear defogger: OFF → ON | | Voltage decreases |
| 53 | Oxygen sensor (rear) | ● Transmission: 2nd gear<br>● Engine speed: 3,500 r/min or more<br>● Driving with the throttle valve widely open | | 0.6 - 1.0 V |
| 54 | Power steering fluid pressure switch | Engine: Warm up, and then idling | Steering wheel stationary | System voltage |
| | | | Steering wheel turning | 0 - 3 V |
| 55 | Injector driver relay | Ignition switch: OFF | | 0 - 0.1 V |
| | | Ignition switch: ON | | 0.5 - 1.0 V |
| 56 | Throttle valve control servo relay | Ignition switch: OFF | | 0 - 0.3 V |
| | | Ignition switch: ON | | 0.5 - 1.0 V |
| 57 | Engine control relay | Ignition switch: OFF | | 0 - 3 V |
| | | Ignition switch: ON | | System voltage |
| 60 | Back-up power source | Ignition switch: OFF | | System voltage |
| 61 | Air flow sensor | Engine: Idling | | 2.2 - 3.2 V |
| | | Engine: 2,500 r/min | | |
| 62 | Intake air temperature sensor | Ignition switch: ON | Intake air temperature: 0°C | 3.2 - 3.8 V |
| | | | Intake air temperature: 20°C | 2.3 - 2.9 V |
| | | | Intake air temperature: 40°C | 1.5 - 2.1 V |
| | | | Intake air temperature: 80°C | 0.4 - 1.0 V |

Purchased from www.WorkshopManuals.co.uk

www.WorkshopManuals.co.uk

| Terminal No. | Check item | Check requirements (engine condition) | | Normal condition |
|---|---|---|---|---|
| 63 | Stop lamp switch | Depress the brake pedal. | | System voltage |
| | | Release the brake pedal. | | 0 - 3 V |
| 65 | A/C switch (2nd channel) | Refer to GROUP 55 - Troubleshooting “Check at the A/C-ECU terminal, engine-ECU output terminals.” | | |
| 66 | Clutch switch | Depress the clutch pedal. | | 0 - 3 V |
| | | Release the clutch pedal. | | System voltage |
| 68 | Ignition switch-ST | Engine: Cranking | | 8V or more |
| 71 | Oxygen sensor (front) | Engine: Warm up, and then hold the engine speed at 2,500r/min (Use a digital voltmeter). | | 0 ↔ 0.8 V alternates. |
| 76 | Air flow sensor reset signal | Engine: Idling | | 0 - 1 V |
| | | Engine: 3,000 r/min | | 6 - 9 V |
| 78 | Throttle position sensor (2nd channel) | Ignition switch: ON | Release the accelerator pedal. | 4.5 - 5.5 V |
| | | | Depress the accelerator pedal fully. | 0.4 - 0.6 V |
| 79 | Accelerator pedal position switch | Ignition switch: ON | Release the accelerator pedal. | 0 - 1 V |
| | | | Depress the accelerator pedal fully. | 4V or more |
| 80 | Vehicle speed sensor | • Ignition switch: ON<br>• Move the vehicle forward. | | 0 ↔ system voltage alternates. |
| 83 | A/C switch (1st channel) | Engine: Idling | A/C switch: OFF | 0 - 3 V |
| | | | A/C switch: ON (Compressor is operating) | System voltage |
| 88 | Small lamp switch | Lighting switch: OFF | | 0 - 3 V |
| | | Lighting switch: ON (Taillamp: ON) | | System voltage |
| 89 | Oxygen sensor heater (front) | Engine: Idling | | 0 - 3 V |
| | | Engine: 3,500 r/min | | System voltage |
| 90 | Oxygen sensor heater (rear) | Engine: Idling | | 0 - 3 V |
| | | Engine: 3,500 r/min | | System voltage |
| 92 | Fuel pressure sensor | Engine: Idling | | 0.3 - 4.7 V |

Purchased from www.WorkshopManuals.co.uk

www.WorkshopManuals.co.uk

| Terminal No. | Check item | Check requirements (engine condition) | | Normal condition |
|---|---|---|---|---|
| 94 | Accelerator pedal position sensor (1st channel) | Ignition switch: ON | Release the accelerator pedal. | 0.3 - 1.0 V*1 |
| | | | Depress the accelerator pedal fully. | 4.2 - 5.5 V*2 |
| 96 | Injector open circuit check signal | Engine: Increase engine speed from idle speed to 4,000 r/min. | | Decreases slightly (approx. 0.7V) from 4.5 V - 5.0 V. |
| 99 | Ignition switch - IG | Ignition switch: ON | | System voltage |

NOTE
Check if the difference in output between *1 and *2 is 4 V or more.

**CHECK CHART FOR RESISTANCE AND CONTINUITY BETWEEN TERMINALS**

1. Turn the ignition switch to OFF.
2. Disconnect the engine-ECU connector.
3. Measure the resistance and check for continuity between the terminals of the engine-ECU harness-side connector while referring to the check chart.

   NOTE
   (1) When measuring resistance and checking continuity, a harness for checking contact pin pressure should be used instead of inserting a test probe.
   (2) Checking need not be carried out in the order given in the chart.

   **Caution**
   **If the terminals that should be checked are mistaken, or if connector terminals are not correctly shorted to earth, damage may be caused to the vehicle wiring, sensors, engine-ECU and/or ohmmeter.**
   **Be careful to prevent this!**

4. If the ohmmeter shows any deviation from the standard value, check the corresponding sensor, actuator and related electrical wiring, and then repair or replace.
5. After repair or replacement, recheck with the ohmmeter to confirm that the repair or replacement has corrected the problem.

Purchased from www.WorkshopManuals.co.uk

www.WorkshopManuals.co.uk

## Engine-ECU Harness Side Connector Terminal Arrangement

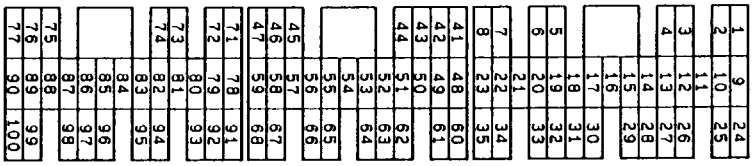


| Terminal No. | Check item | Standard value, normal condition (check requirements) |
|---|---|---|
| 5 - 47 | EGR valve (D) | 15 - 20 Ω (at 20°C) |
| 6 - 47 | EGR valve (C) | |
| 32 - 47 | EGR valve (B) | |
| 34 - 47 | EGR valve (A) | |
| 16 - 47 | Purge control solenoid valve | 36 - 44 Ω (at 20°C) |
| 44 - 72 | Engine coolant temperature sensor | 5.1 - 6.5 kΩ (when engine coolant temperature is 0°C) |
| | | 2.1 - 2.7 kΩ (when engine coolant temperature is 20°C) |
| | | 0.9 - 1.3 kΩ (when engine coolant temperature is 40°C) |
| | | 0.26 - 0.36 kΩ (when engine coolant temperature is 80°C) |
| 46 - Body earth | Earth | Continuity (0 Ω) |
| 58 - Body earth | | |
| 62 - 72 | Intake air temperature sensor | 5.3 - 6.7 kΩ (when intake air temperature is 0°C) |
| | | 2.3 - 3.0 kΩ (when intake air temperature is 20°C) |
| | | 1.0 - 1.5 kΩ (when intake air temperature is 40°C) |
| | | 0.30 - 0.42 kΩ (when intake air temperature is 80°C) |
| 79 - 49 | Accelerator pedal position switch | Continuity (when the accelerator pedal is released) |
| | | No continuity (when the accelerator pedal is slightly depressed) |
| 89 - 47 | Oxygen sensor heater control (front) | 4.5 - 8.0 Ω (at 20°C) |
| 90 - 47 | Oxygen sensor heater (rear) | 4.5 - 8.0 Ω (at 20°C) |

Purchased from www.WorkshopManuals.co.uk

www.WorkshopManuals.co.uk

## CHECK AT THE THROTTLE VALVE CONTROLLER TERMINALS

### TERMINAL VOLTAGE CHECK CHART

**Throttle Valve Controller Terminal Arrangement**

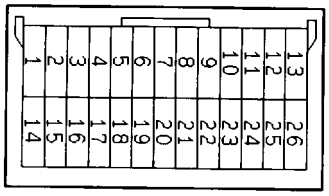


7FU2290

| Terminal No. | Check item | Check condition (Engine condition) | | Normal condition |
|---|---|---|---|---|
| 1 | Throttle control servo (U) | ● Ignition switch: ON<br>● Accelerator pedal: From released position to fully depressed position | | Changes |
| 14 | Throttle control servo (V) | | | |
| 15 | Throttle control servo (W) | | | |
| 2 | Throttle control servo power supply | Ignition switch: ON | | System voltage |
| 5 | Power supply | Ignition switch: ON | | System voltage |
| 6 | Sensor applied voltage | Ignition switch: ON | | 4.5 - 5.5 V |
| 7 | Throttle position sensor (1st channel) | Ignition switch: ON | Release the accelerator pedal. | 0.4 - 0.8 V |
| | | | Depress the accelerator pedal fully. | 4.2 - 4.8 V |
| 18 | Backup power supply | Ignition switch: OFF | | System voltage |
| 20 | Accelerator pedal position sensor (2nd channel) | Ignition switch: ON | Release the accelerator pedal. | 0.985 - 1.085 V |
| | | | Depress the accelerator pedal fully. | 4.0 V or higher |
| 22 | Ignition switch-IG | Ignition switch: ON | | System voltage |

Purchased from www.WorkshopManuals.co.uk

www.WorkshopManuals.co.uk

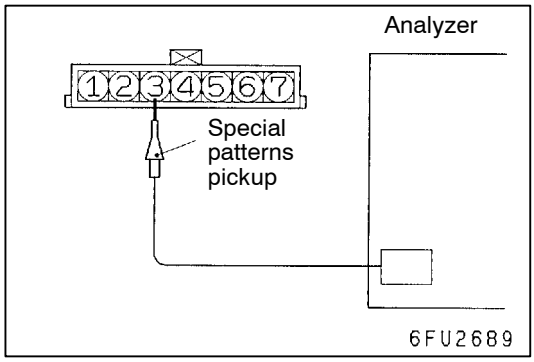


## INSPECTION PROCEDURE USING AN ANALYZER

### AIR FLOW SENSOR (AFS)

**Measurement Method**

1. Disconnect the air flow sensor connector, and connect the special tool (test harness: MB991709) in between. (All terminals should be connected.)
2. Connect the analyzer special patterns pickup to air flow sensor connector terminal 3.

**Alternate Method (Test harness not available)**

1. Connect the analyzer special patterns pickup to engine-ECU terminal 61.

**Standard Wave Pattern**

**Observation conditions**

| | |
|---|---|
| Function | Special patterns |
| Pattern height | Low |
| Pattern selector | Display |
| Engine r/min | Idle speed |

**Standard wave pattern**

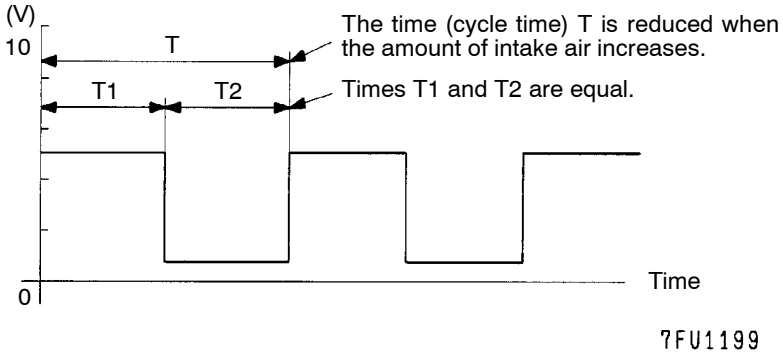


**Observation conditions (from conditions above engine speed is increased by racing.)**

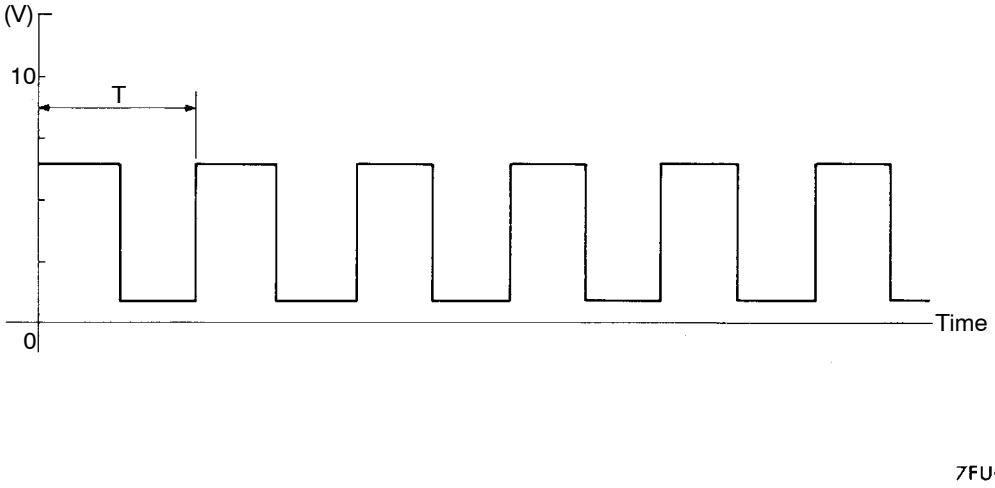


**Wave Pattern Observation Points**

Check that cycle time T becomes shorter and the frequency increases when the engine speed is increased.

Purchased from www.WorkshopManuals.co.uk

www.WorkshopManuals.co.uk

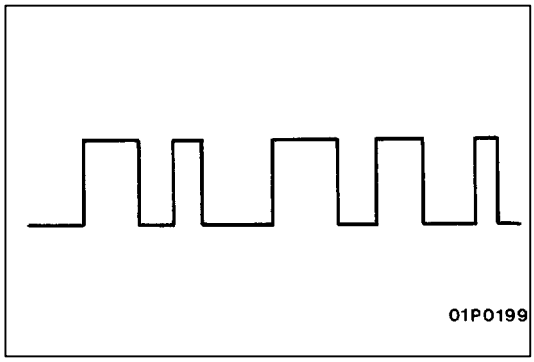


**Examples of Abnormal Wave Patterns**

- Example 1

  **Cause of problem**

  Sensor interface malfunction

  **Wave pattern characteristics**

  Rectangular wave pattern is output even when the engine is not started.

- Example 2

  **Cause of problem**

  Damaged rectifier or vortex generation column

  **Wave pattern characteristics**

  Unstable wave pattern with non-uniform frequency. However, when an ignition leak occurs during acceleration, the wave pattern will be distorted temporarily, even if the air flow sensor is normal.

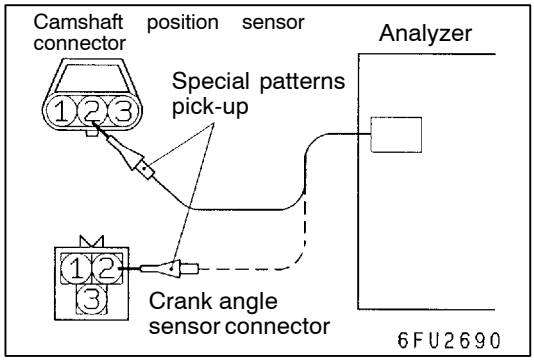


## CAMSHAFT POSITION SENSOR AND CRANK ANGLE SENSOR

### Measurement Method

1. Disconnect the camshaft position sensor connector and connect the special tool (test harness: MB991709) in between. (All terminals should be connected.)
2. Connect the analyzer special patterns pickup to camshaft position sensor terminal 2.
3. Disconnect the crank angle sensor connector and connect the special tool (test harness: MD998478) in between.
4. Connect the analyzer special patterns pickup to crank angle sensor terminal 2.

### Alternate Method (Test harness not available)

1. Connect the analyzer special patterns pickup to engine-ECU terminal 50. (When checking the camshaft position sensor signal wave pattern.)
2. Connect the analyzer special patterns pickup to engine-ECU terminal 43. (When checking the crank angle sensor signal wave pattern.)

### Standard Wave Pattern

**Observation conditions**

| | |
|---|---|
| Function | Special patterns |
| Pattern height | Low |
| Pattern selector | Display |
| Engine r/min | Idle speed |

Purchased from www.WorkshopManuals.co.uk

www.WorkshopManuals.co.uk

**Standard wave pattern**

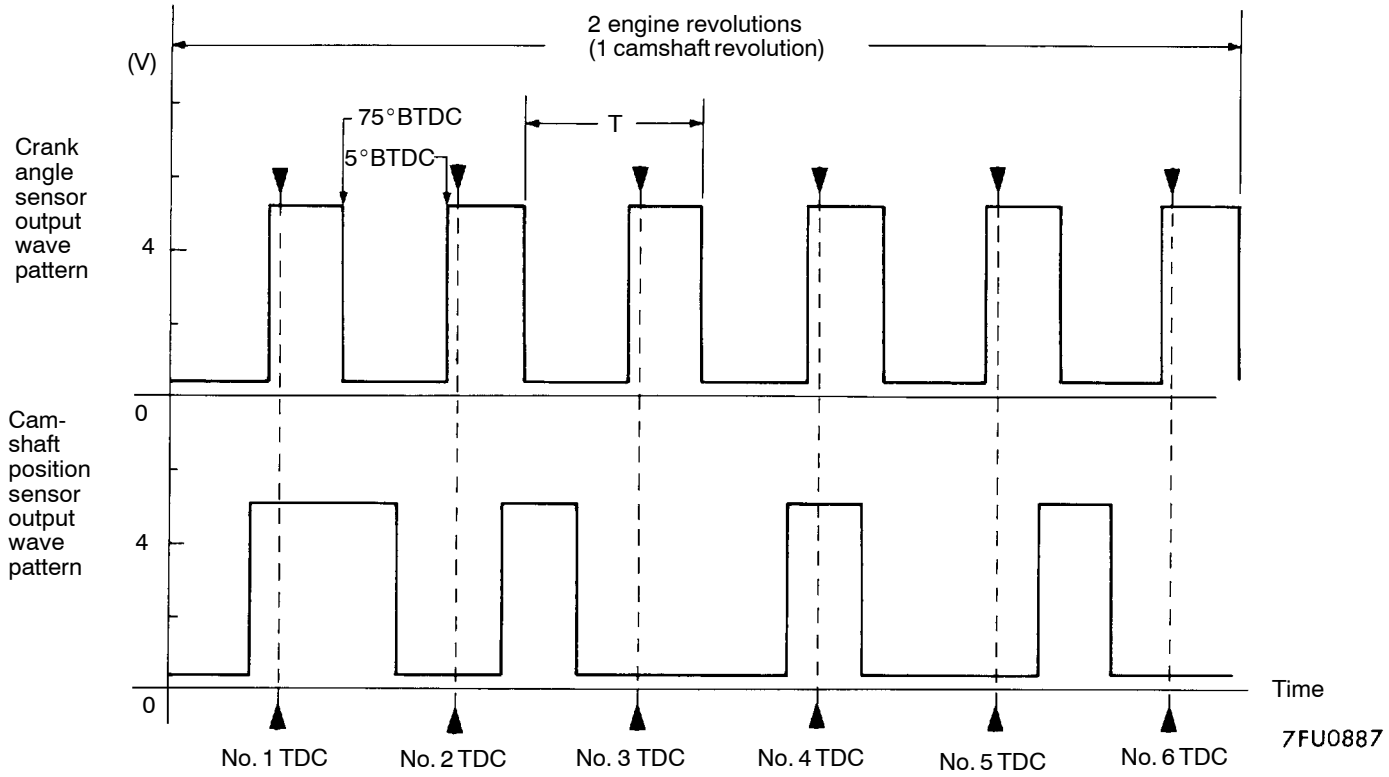


NOTE
1. TDC: Top dead centre
2. The time (cycle time) T is reduced when the engine speed increases

**Wave Pattern Observation Points**

Check that cycle time T becomes shorter when the engine speed increases.

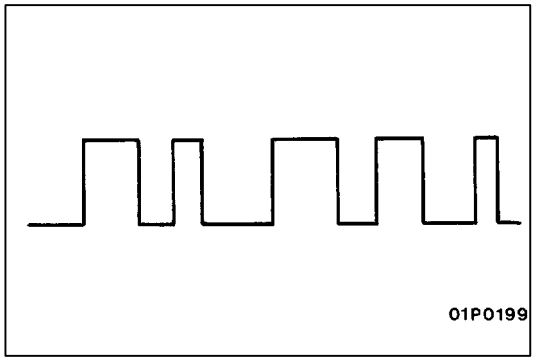


**Examples of Abnormal Wave Patterns**

- Example 1

  **Cause of problem**

  Sensor interface malfunction

  **Wave pattern characteristics**

  Rectangular wave pattern is output even when the engine is not started.

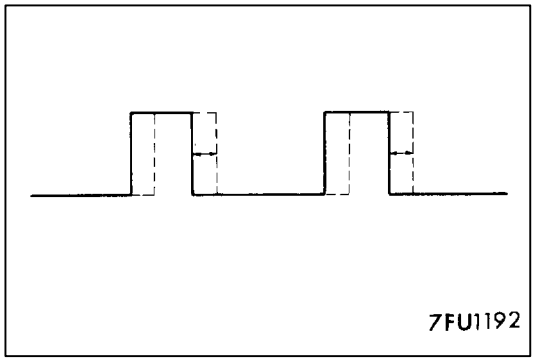


- Example 2

  **Cause of problem**

  Loose timing belt
  Abnormality in sensor disk

  **Wave pattern characteristics**

  Wave pattern is displaced to the left or right.

Purchased from www.WorkshopManuals.co.uk

www.WorkshopManuals.co.uk

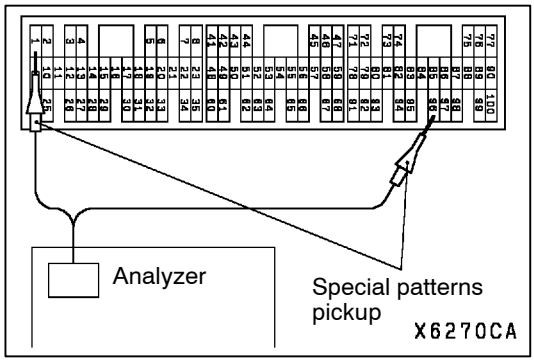


## INJECTORS AND INJECTOR OPEN CIRCUIT CHECK SIGNAL

### Measurement Method

1. Connect the analyzer special patterns pickup to terminal 1 (No.1 injector) of the engine-ECU connector.
2. Connect the analyzer special patterns pickup to terminal 96 (injector open circuit check signal) of the engine-ECU connector.
3. After checking terminal 1, check terminal 9 (No.2 injector), terminal 24 (No.3 injector) and terminal 2 (No.4 injector), terminal 10 (No.5 injector), terminal 25 (No.6 injector).

### Standard Wave Pattern

### Observation conditions

| | |
|---|---|
| Function | Special pattern |
| Pattern height | Low |
| Pattern selector | Display |
| Engine r/min | Idle speed |

### Standard wave pattern

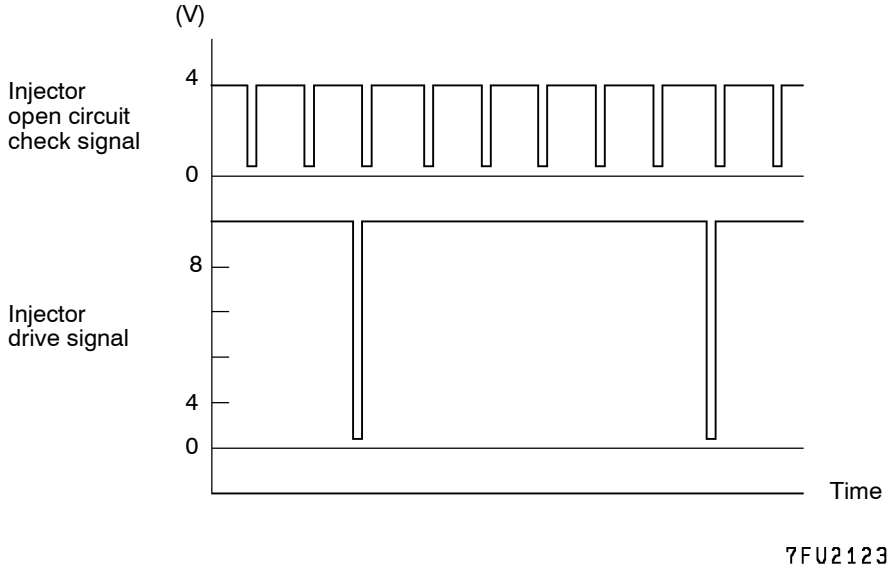


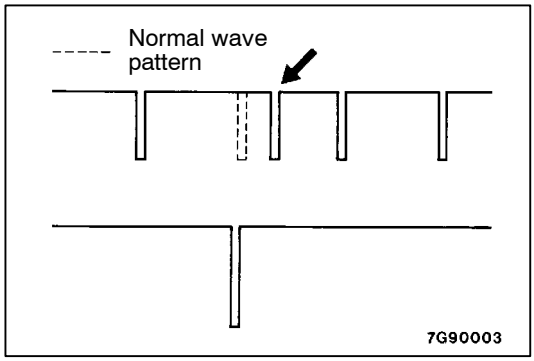


### Wave Pattern Observation Points

- Check that the injector drive time is identical to the time displayed on the MUT-II.
- Check that the injector signals become greatly extended but soon return to their normal wave length when the engine is suddenly raced.
- Check that the injector open circuit check signal is synchronized with each rising portion of the injector drive signal.

Purchased from www.WorkshopManuals.co.uk

www.WorkshopManuals.co.uk

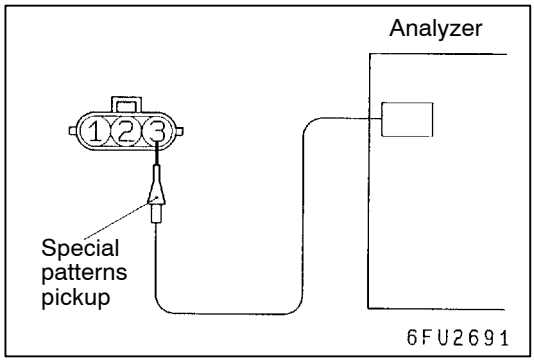


## IGNITION COIL AND POWER TRANSISTOR

Power transistor control signal

### Measurement Method

1. Disconnect the ignition coil connector, and connect the special tool (test harness: MB991658) in between. (All terminals should be connected.)
2. Connect the analyzer special patterns pickup to terminal 3 of each ignition coil connector in turn.

### Alternate Method (Test harness not available)

1. Connect the analyzer special patterns pickup to engine-ECU terminal 3 (No. 1 ignition coil), terminal 12 (No. 2 ignition coil), terminal 26 (No. 3 ignition coil), terminal 4 (No. 4 ignition coil), terminal 13 (No.5 ignition coil), terminal 27 (No.6 ignition coil) respectively.

### Standard Wave Pattern

### Observation condition

| | |
|---|---|
| Function | Special patterns |
| Pattern height | Low |
| Pattern selector | Display |
| Engine r/min | Approx. 1,200 r/min |

### Standard wave pattern

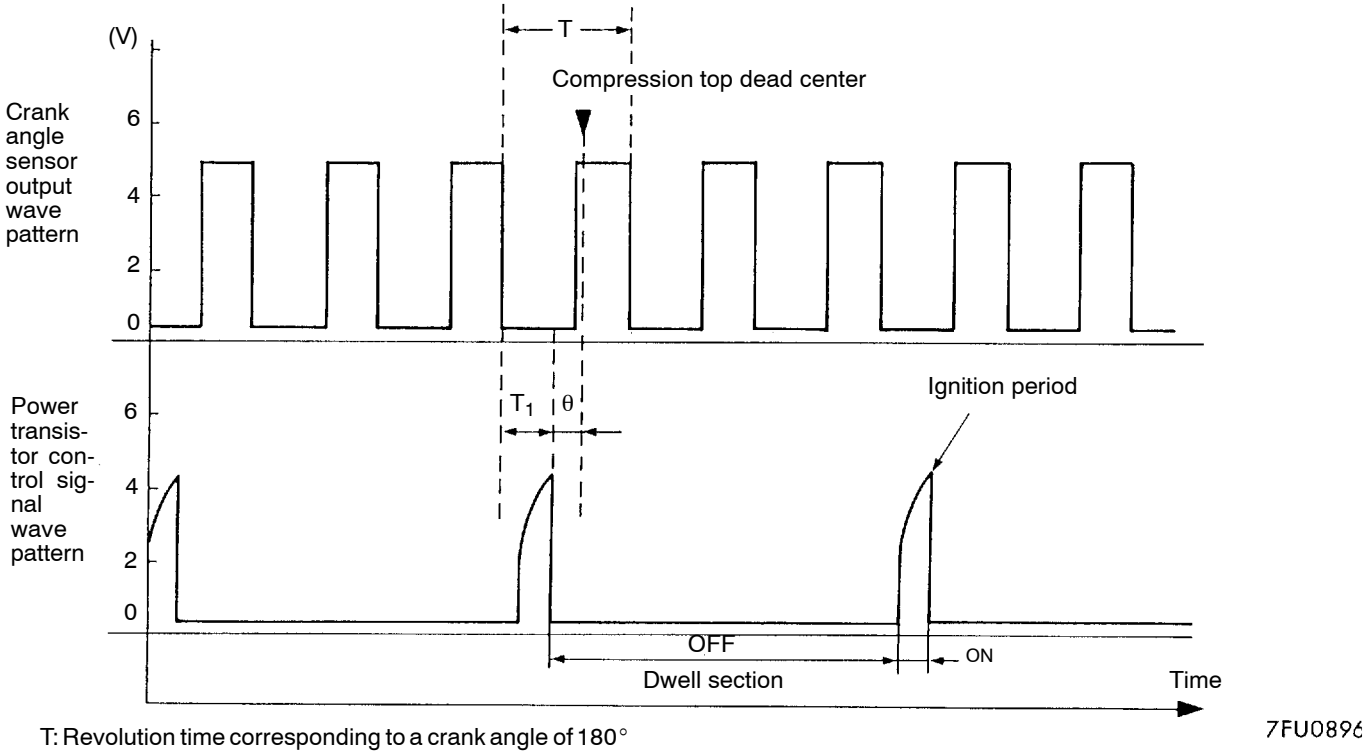


T: Revolution time corresponding to a crank angle of 180°

$T_1$: Time calculated by the engine-ECU

θ: Spark advance angle

Purchased from www.WorkshopManuals.co.uk

www.WorkshopManuals.co.uk

**Wave Pattern Observation Points**

Point: Condition of wave pattern build-up section and maximum voltage (Refer to abnormal wave pattern examples 1 and 2.)

| Condition of wave pattern build-up section and maximum voltage | Probable cause |
|---|---|
| Rises from approx. 2V to approx. 4.5V at the top-right | Normal |
| 2V rectangular wave | Open-circuit in ignition primary circuit |
| Rectangular wave at power voltage | Power transistor malfunction |

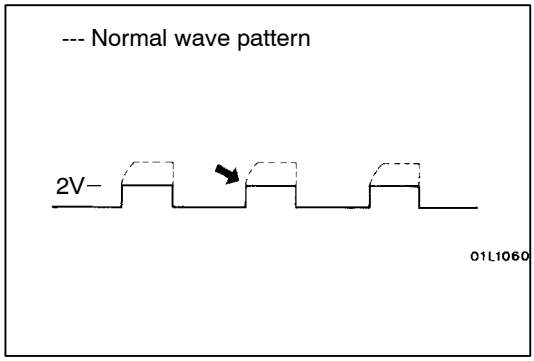


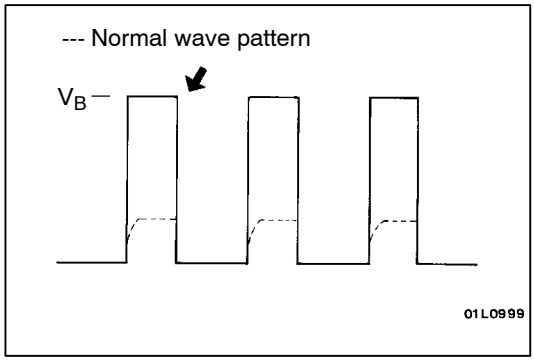


**Examples of Abnormal Wave Patterns**

- Example 1

  Wave pattern during engine cranking

  **Cause of problem**

  Open-circuit in ignition primary circuit

  **Wave pattern characteristics**

  Top-right part of the build-up section cannot be seen, and voltage value is approximately 2V too low.

- Example 2

  Wave pattern during engine cranking

  **Cause of problem**

  Malfunction in power transistor

  **Wave pattern characteristics**

  Power voltage results when the power transistor is ON.

Purchased from www.WorkshopManuals.co.uk

www.WorkshopManuals.co.uk

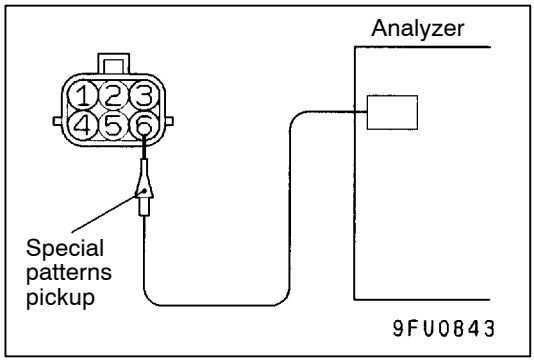


## EGR VALVE (STEPPER MOTOR)

### Measurement Method

1. Disconnect the EGR valve connector, and connect the special tool (test harness: MB991658) in between.
2. Connect the analyzer special patterns pickup to the EGR valve-side connector terminal 1, terminal 3, terminal 4 and terminal 6 respectively.

### Alternate Method (Test harness not available)

1. Connect the analyzer special patterns pickup to engine-ECU terminal 32, connection terminal 34, connection terminal 5, and connection terminal 6 respectively.

### Standard Wave Pattern

### Observation conditions

| | |
|---|---|
| Function | Special patterns |
| Pattern height | High |
| Pattern selector | Display |
| Engine condition | When the engine coolant temperature is 20°C or below, turn the ignition switch from OFF to ON (without starting the engine). |
| | While the engine is idling, turn the A/C switch to ON. |
| | Immediately after starting the warm engine |

### Standard wave pattern

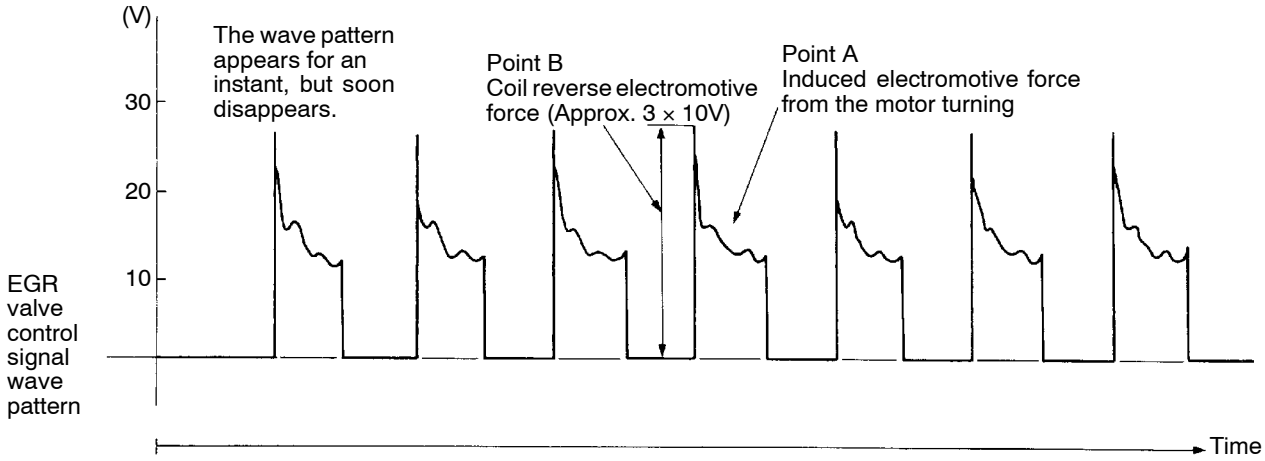


7FU1204

Purchased from www.WorkshopManuals.co.uk

www.WorkshopManuals.co.uk

**Wave Pattern Observation Points**

Check that the standard wave pattern appears when the EGR control servo is operating.
Point A: Presence or absence of induced electromotive force from the motor turning. (Refer to the abnormal wave pattern.)

| Contrast with standard wave pattern | Probable cause |
|---|---|
| Induced electromotive force does not appear or is extremely small. | Motor is malfunctioning |

Point B: Height of coil reverse electromotive force

| Contrast with standard wave pattern | Probable cause |
|---|---|
| Coil reverse electromotive force does not appear or is extremely small. | Short in the coil |

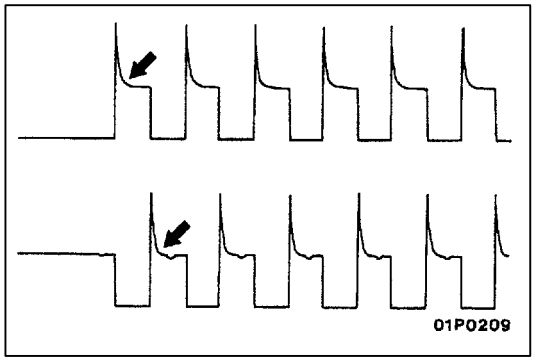


**Examples of Abnormal Wave Pattern**

- Example 1

  **Cause of problem**

  Motor is malfunctioning. (Motor is not operating.)

  **Wave pattern characteristics**

  Induced electromotive force from the motor turning does not appear.

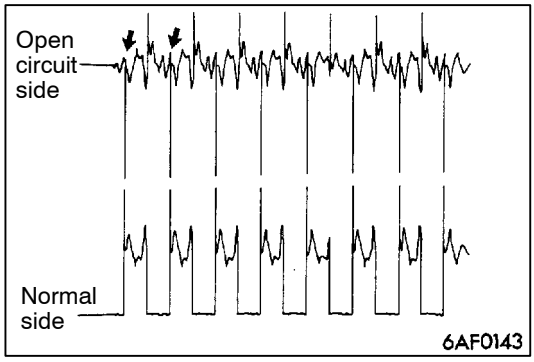


- Example 2

  **Cause of problem**

  Open circuit in the line between the EGR valve and the engine-ECU

  **Wave pattern characteristics**

  Current is not supplied to the motor coil on the open circuit side. (Voltage does not drop to 0 V.)
  Furthermore, the induced electromotive force waveform at the normal side is slightly different from the normal waveform.

Purchased from www.WorkshopManuals.co.uk

www.WorkshopManuals.co.uk

# TROUBLESHOOTING <A/T>

## STANDARD FLOW OF DIAGNOSTIC TROUBLESHOOTING

Refer to GROUP 00 - How to Use Troubleshooting/Inspection Service Points.

NOTE
When replacing the engine-A/T-ECU, replace immobilizer-ECU as well at the same time.

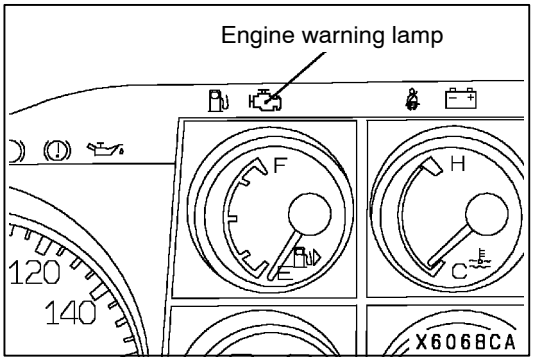


## DIAGNOSIS FUNCTION

### ENGINE WARNING LAMP (CHECK ENGINE LAMP)

If an abnormality occurs in any of the following items related to the GDI system, the engine warning lamp will illuminate. If the lamp remains illuminated or if the lamp illuminates while the engine is running, check the diagnosis code output. However, the warning lamp will illuminate as bulb check for five seconds whenever the ignition switch is turned to the ON position.

**Engine warning lamp inspection items**

| | |
|---|---|
| Air flow sensor | Ignition coil (power transistor) |
| Barometric pressure sensor | Detonation sensor |
| Intake air temperature sensor | Crank angle sensor |
| Engine coolant temperature sensor | Camshaft position sensor |
| Oxygen sensor | EGR valve |
| Oxygen sensor heater | Purge control solenoid valve |
| Fuel system malfunction | Injector driver |
| Abnormal fuel pressure | Electronic-controlled throttle valve system |
| Injector | Throttle control servo |
| Throttle position sensor (1st channel) | Throttle valve controller |
| Throttle position sensor (2nd channel) | Immobilizer system |
| Accelerator pedal position sensor (1st channel) | Engine-A/T-ECU |
| Accelerator pedal position sensor (2nd channel) | - |

**Caution**
**If a malfunction occurred inside the engine-A/T-ECU, the engine warning lamp will remain illuminated.**

NOTE
The engine warning lamp will flash when the electronic-controlled throttle valve system is suspended by the fail-safe function.

Purchased from www.WorkshopManuals.co.uk

www.WorkshopManuals.co.uk

## METHOD OF READING AND ERASING DIAGNOSIS CODES

Refer to GROUP 00 - How to Use Troubleshooting/Inspection Service Points.

## DIAGNOSIS USING DIAGNOSIS 2 MODE

1. Switch the diagnosis mode of the engine-A/T-ECU to DIAGNOSIS 2 mode using the MUT-II, and then carry out a road test.
2. Take a reading of the diagnosis code and repair the problem location.
3. Turn the ignition switch to the LOCK (OFF) position, and then back to ON again.

   NOTE
   By turning the ignition switch to the LOCK (OFF) position, the engine-A/T-ECU will switch the DIAGNOSIS 2 mode to DIAGNOSIS 1 mode.
4. Erase the diagnosis codes.

## INSPECTION USING MUT-II DATA LIST AND ACTUATOR TESTING

1. Carry out inspection by means of the data list and actuator test function. If there is an abnormality, check and repair the chassis harnesses and components.
2. After repairing, re-check using the MUT-II and check that the abnormal input and output have returned to normal as a result of the repairs.
3. Erase the diagnosis code memory.
4. Remove the MUT-II, and then start the engine again and carry out a road test to confirm that the problem has disappeared.

Purchased from www.WorkshopManuals.co.uk

www.WorkshopManuals.co.uk

## FAIL-SAFE FUNCTION REFERENCE TABLE

When the main sensor malfunctions are detected by the diagnosis function, the vehicle is controlled by means of the pre-set control logic to maintain safe conditions for driving.

| Malfunctioning item | Control contents during malfunction |
|---|---|
| Air flow sensor | 1. Suspends lean burn operation.<br>2. Uses the throttle position sensor signal and engine speed signal (crank angle sensor signal) to take reading of the basic injector drive time and basic ignition timing from the pre-set mapping. |
| Intake air temperature sensor | Controls as if the intake air temperature is 25°C. |
| Throttle position sensor (2nd channel) | 1. Suspends lean burn operation.<br>2. Controls the throttle opening angle feedback (half as much as the opening rate in the normal condition) by using signals from the throttle position sensor (1st channel). However, this controlling system is not applied if the throttle position sensor (1st channel) and throttle position sensor (2nd channel) combination output voltage is outside 4 - 6 V.<br>3. Refrains from controlling the throttle opening angle feedback if the throttle position sensor (1st channel) is also defective. |
| Engine coolant temperature sensor | Controls as if the engine coolant temperature is 80°C. (Moreover, the control system is working until the ignition switch is turned OFF if the sensor signal returns to normal.) |
| Camshaft position sensor | Cuts the fuel supply once a malfunction is detected. (Only when there has been no occasion of detecting No.1 cylinder top dead centre after the ignition switch is turned ON.) |
| Vehicle speed sensor | 1. Suspends lean burn operation. However, the control is cancelled as a certain time passes by with the engine speed of 1,500 r/min or more.<br>2. Suspends lean burn operation during the engine idling. |
| Barometric pressure sensor | Controls as if the barometric pressure is 101 kPa. |
| Detonation sensor | Fixes the ignition timing as that for regular gasoline. |
| Injector | 1. Suspends lean burn operation.<br>2. Suspends the exhaust gas recirculation. |
| Ignition coil (incorporating power transistor) | 1. Suspends lean burn operation.<br>2. Cuts off the fuel supply to cylinders with an abnormal ignition signal. |
| Fuel pressure sensor | 1. Controls as if the fuel pressure is 5MPa.<br>2. Suspends fuel injection. (when the low pressure is detected and the engine speed is more than 3,000r/min) |
| Alternator FR terminal | Refrains from controlling to suppress the alternator output to electrical load. (Operated as a normal alternator) |
| Accelerator pedal position sensor (2nd channel) | 1. Suspends lean burn operation.<br>2. Controls the throttle valve position by using signals from the accelerator pedal position sensor (1st channel). (However, the control system is not applicable if the difference from the accelerator pedal position sensor (1st channel) output voltage is 1.0V or higher.)<br>3. Suspends the electronic controlled throttle valve system if accelerator pedal position sensor (1st channel) is also defective. |

Purchased from www.WorkshopManuals.co.uk

www.WorkshopManuals.co.uk

| Malfunctioning item | Control contents during malfunction |
|---|---|
| Accelerator pedal position sensor (1st channel) | 1. Suspends lean burn operation.<br>2. Controls the throttle valve position by using signals from the accelerator pedal position sensor (2nd channel). (However, this control is not applicable if the voltage difference between the accelerator pedal position sensor (1st channel) and accelerator pedal position sensor (2nd channel) is 1.0 V or higher.)<br>3. Also suspends the electronic-controlled throttle valve system when the accelerator pedal position sensor (2nd channel) is defective. |
| Throttle position sensor (1st channel) | 1. Suspends lean burn operation.<br>2. Controls throttle opening angle feedback by using signals from throttle position sensor (2nd channel). (However, the controlling system is not applied when the throttle position sensor (1st channel) and throttle position sensor (2nd channel) combination output voltage is outside 4 - 6 V.)<br>3. Refrains from controlling the throttle opening angle feedback when throttle position sensor (2nd channel) is also defective. |
| Electronic-controlled throttle valve system | 1. Suspends the electronic controlled throttle valve system.<br>2. Suspends lean burn operation.<br>3. Suspends the idle speed feedback control. |
| Throttle valve position feedback | 1. Suspends the electronic controlled throttle valve system.<br>2. Suspends lean burn operation.<br>3. Suspends the engine speed feedback control.<br>However, if the throttle valve opening angle is significantly wide, this system carries out the following controls.<br>1. Always cuts the fuel supply to three cylinders.<br>2. Cuts the fuel supply when the engine speed reaches 3,000 r/min or more. |
| Throttle control servo | 1. Suspends the electronic-controlled throttle valve system.<br>2. Suspends lean burn operation.<br>3. Suspends the engine speed feedback control. |
| Communication line between the throttle valve controller and the ECU | 1. Communication error between the throttle valve controller and the engine-A/T-ECU:<br>● Suspends lean burn operation.<br>● Cuts the fuel supply when the engine speed reaches 3,000 r/min or more.<br>● Suspends the cruise-control.<br>2. Communication error between the throttle valve controller and the engine-A/T-ECU:<br>● Suspends lean burn operation.<br>● Cuts the fuel supply when the engine speed reaches 3,000 r/min or more.<br>● Suspends the cruise-control.<br>● The throttle valve controller controls the throttle valve opening angle by using signals from accelerator pedal position sensor (2nd channel). |
| Throttle valve controller | 1. Suspends the electronic-controlled throttle valve system.<br>2. Suspends lean burn operation.<br>3. Suspends the engine speed feedback control. |

NOTE
If the electronic-controlled throttle valve system is suspended, the engine warning lamp will illuminate.

Purchased from www.WorkshopManuals.co.uk

www.WorkshopManuals.co.uk

## INSPECTION CHART FOR DIAGNOSIS CODES

| Code No. | Diagnosis item | Reference page |
|---|---|---|
| 11 | Oxygen sensor system | 13A-131 |
| 12 | Air flow sensor system | 13A-133 |
| 13 | Intake air temperature sensor system | 13A-135 |
| 14 | Throttle position sensor (2nd channel) system | 13A-137 |
| 21 | Engine coolant temperature sensor system | 13A-138 |
| 22 | Crank angle sensor system | 13A-140 |
| 23 | Camshaft position sensor system | 13A-142 |
| 24 | Vehicle speed sensor system | 13A-144 |
| 25 | Barometric pressure sensor system | 13A-145 |
| 31 | Detonation sensor system | 13A-146 |
| 41 | Injector system | 13A-147 |
| 44 | Ignition coil (incorporating power transistor) system (for No. 1 and No. 4 cylinders) | 13A-148 |
| 52 | Ignition coil (incorporating power transistor) system (for No. 2 and No. 5 cylinders) | 13A-148 |
| 53 | Ignition coil (incorporating power transistor) system (for No. 3 and No. 6 cylinders) | 13A-148 |
| 54 | Immobilizer system | 13A-150 |
| 56 | Abnormal fuel pressure system | 13A-151 |
| 64 | Alternator FR terminal system | 13A-153 |
| 77 | Accelerator pedal position sensor (2nd channel) system | 13A-154 |
| 78 | Accelerator pedal position sensor (1st channel) system | 13A-156 |
| 79 | Throttle position sensor (1st channel) system | 13A-158 |
| 89 | Abnormality in fuel pressure system | 13A-160 |
| 91 | Electronic-controlled throttle valve system | 13A-161 |
| 92 | Throttle valve position feedback system | 13A-162 |
| 93 | Throttle valve control servo system | 13A-163 |
| 94 | Communication line system with throttle valve controller | 13A-164 |
| 96 | Throttle valve controller system | 13A-165 |

NOTE
Code No. 56 may be also output when air is sucked in high-pressure fuel line due to no fuel supply.

Purchased from www.WorkshopManuals.co.uk

www.WorkshopManuals.co.uk

## INSPECTION PROCEDURE CLASSIFIED BY DIAGNOSIS CODE

| Code No.11 Oxygen sensor system | Probable cause |
|---|---|
| Range of Check<br>● Three minutes have been passed since the engine has been started.<br>● The engine coolant temperature is approx. 80°C or more.<br>● Intake air temperature is 20 - 30°C<br>● Engine speed is 1,200 r/min or more<br>● Driving on a level surface at constant speed.<br>Set Conditions<br>● The oxygen sensor output voltage is 4.5 V or more when the sensor output voltage is 0.2 V or less and a voltage of 5 V is applied to the oxygen sensor inside the engine-A/T-ECU. | ● Malfunction of oxygen sensor<br>● Open or short circuit in the oxygen sensor circuit or loose connector contact<br>● Malfunction of engine-A/T-ECU |

Purchased from www.WorkshopManuals.co.uk

www.WorkshopManuals.co.uk

**Check the following connector:**
C-20

NG → **Repair**

OK ↓

Measure at oxygen sensor (front) connector C-20.
- Disconnect the connector and measure at the harness side.
- Resistance between terminal 2 and earth
  **OK:** 2 Ω or less

NG → **Check the following connectors:** D-121, E-116 → NG → **Repair**

OK ↓

Check the harness wire between between the oxygen sensor and the engine-A/T-ECU. → NG → **Repair**

OK ↓

Check the trouble symptoms.

NG ↓

Replace the engine-A/T-ECU.

OK ↓

Measure at oxygen sensor connector C-20.
- Use the test harness (MD998464) to connect the connector, and measure at the pick-up harness side.
- Engine: 2,500r/min (after warming up)
- Selector lever position: P

(1) Voltage between terminal 2 and earth
**OK:** 0.5 V or less

(2) Voltage between terminal 4 and earth
**OK:** 0 V and 0.8 V alternate.

(1) NG → **Check the following connectors:** D-121, E-116 → NG → **Repair**

OK ↓

Check the harness wire between the oxygen sensor and the engine-A/T-ECU, and repair if necessary.

(2) NG → Check the oxygen sensor. (Refer to P.13A-230.) → NG → **Replace**

OK ↓

**Check the following connectors:** D-121, E-116 → NG → **Repair**

OK ↓

Check the harness wire between the oxygen sensor and the engine-A/T-ECU, and repair if necessary.

OK ↓

Measure at engine-A/T-ECU connector D-121.
- Measure the voltage at the engine-A/T-ECU terminal.
- Engine: 2,500r/min (after warming up)
- Selector lever position: P
- Voltage between terminal 72 and earth
  **OK:** 0V and 0.8 V alternate.

NG → **Check the following connectors:** D-121, E-116 → NG → **Repair**

OK ↓

Check the harness wire between the oxygen sensor and the engine-A/T-ECU, and repair if necessary.

OK ↓

**Check the following connectors:** D-121, E-116

NG → **Repair**

OK ↓

Check the trouble symptoms.

OK → Transient malfunction (Refer to GROUP 00 - Points to Note for Intermittent Malfunctions.)

NG ↓

Replace the engine-ECU.

Purchased from www.WorkshopManuals.co.uk

www.WorkshopManuals.co.uk

| Code No.12 Air flow sensor system | Probable cause |
|---|---|
| Range of Check<br>● Engine speed: 500 r/min or more<br>Set Conditions<br>● The sensor output frequency is 3.3 Hz or less for four seconds. | ● Malfunction of air flow sensor<br>● Open or short circuit in air flow sensor circuit or loose connector contact<br>● Malfunction of engine-A/T-ECU |

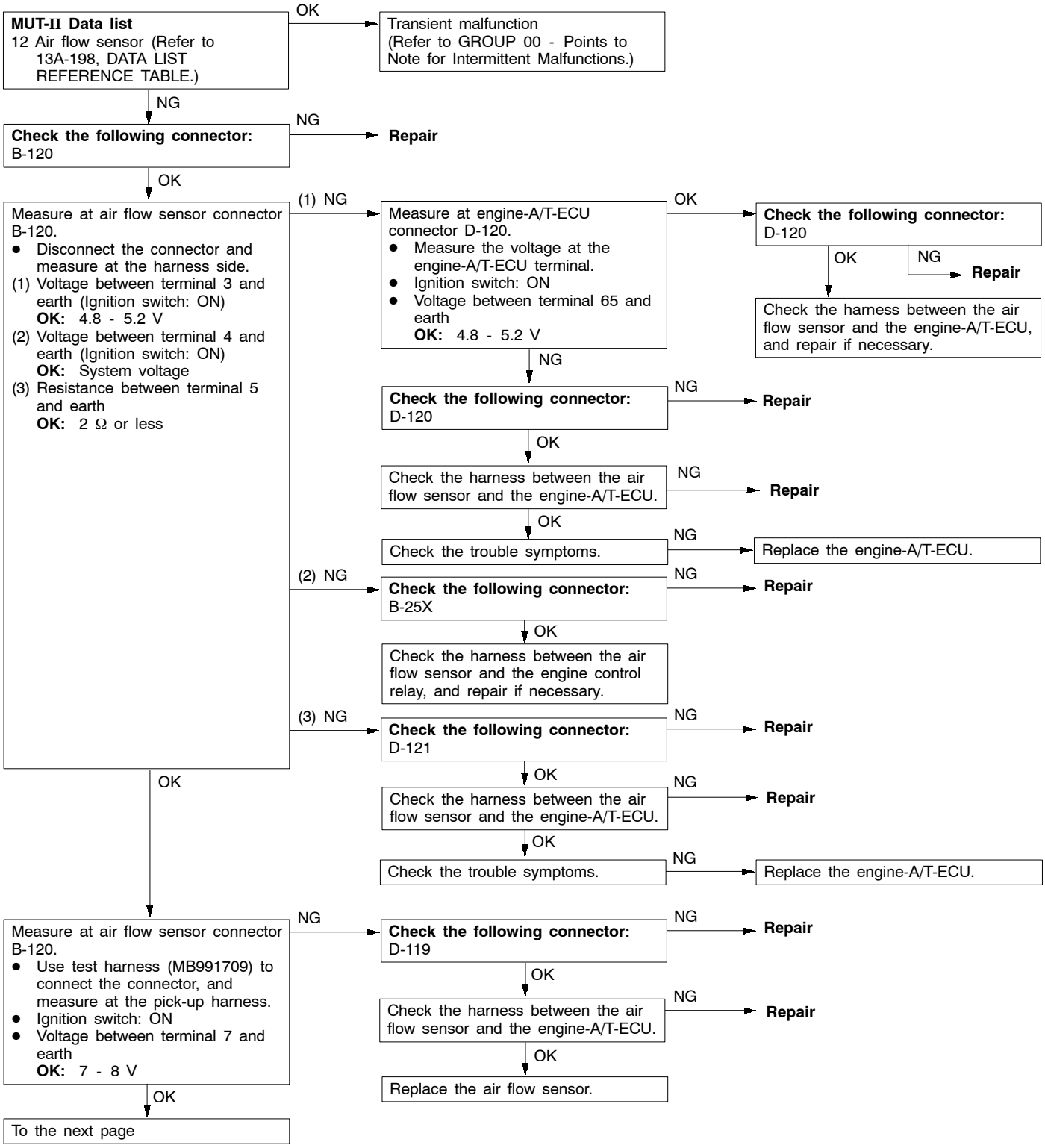


Purchased from www.WorkshopManuals.co.uk

www.WorkshopManuals.co.uk

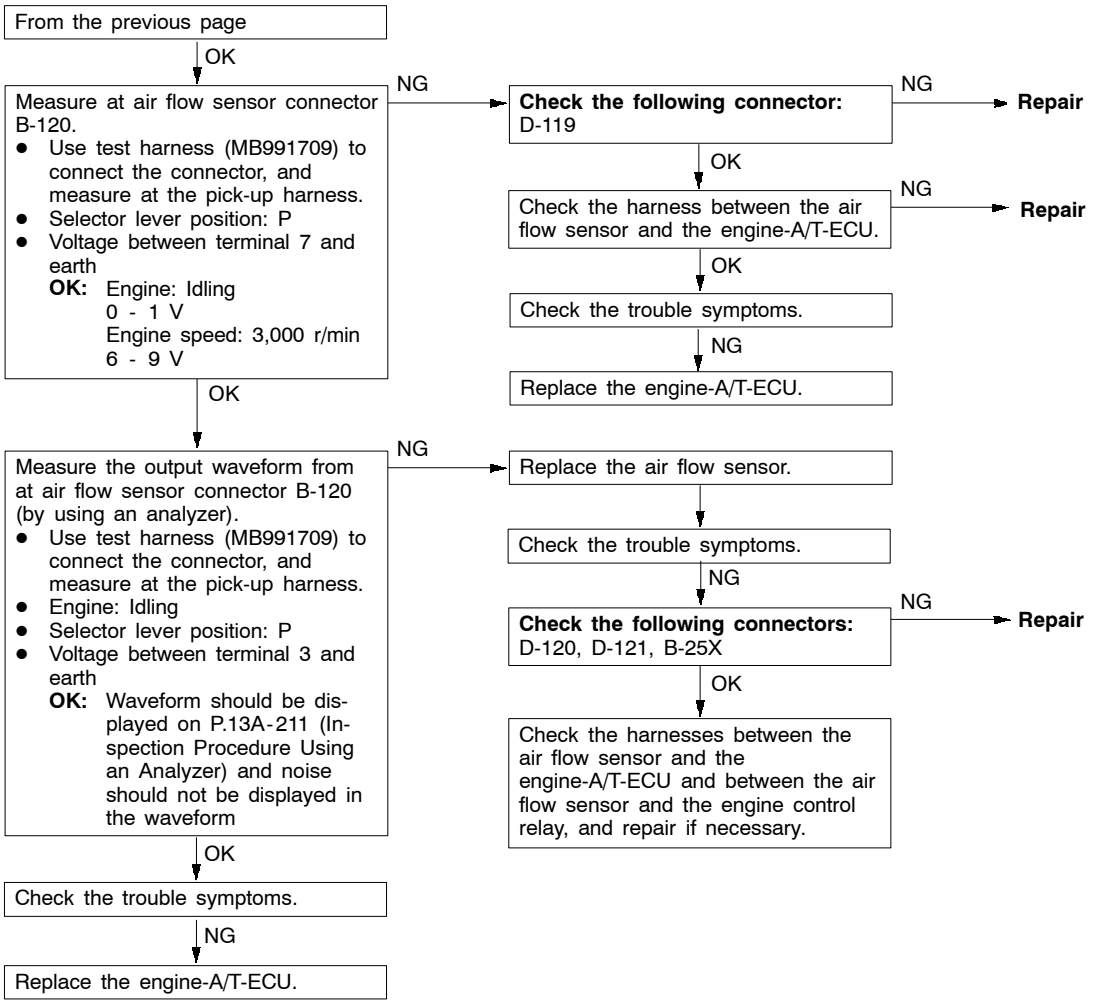


Purchased from www.WorkshopManuals.co.uk

www.WorkshopManuals.co.uk

| Code No.13 Intake air temperature sensor system | Probable cause |
|---|---|
| Range of Check<br>● Two seconds have passed since the ignition switch is turned ON or the engine starting process is completed.<br>Set Conditions<br>● The sensor output voltage is 4.6 V or more for four seconds (equivalent to -45°C of intake air temperature)<br>or<br>● The sensor output voltage is 0.2 V or more for four seconds (equivalent to 125°C of intake air temperature) | ● Malfunction of intake air temperature sensor<br>● Open or short circuit in intake air temperature sensor or loose connector contact<br>● Malfunction of engine-A/T-ECU |

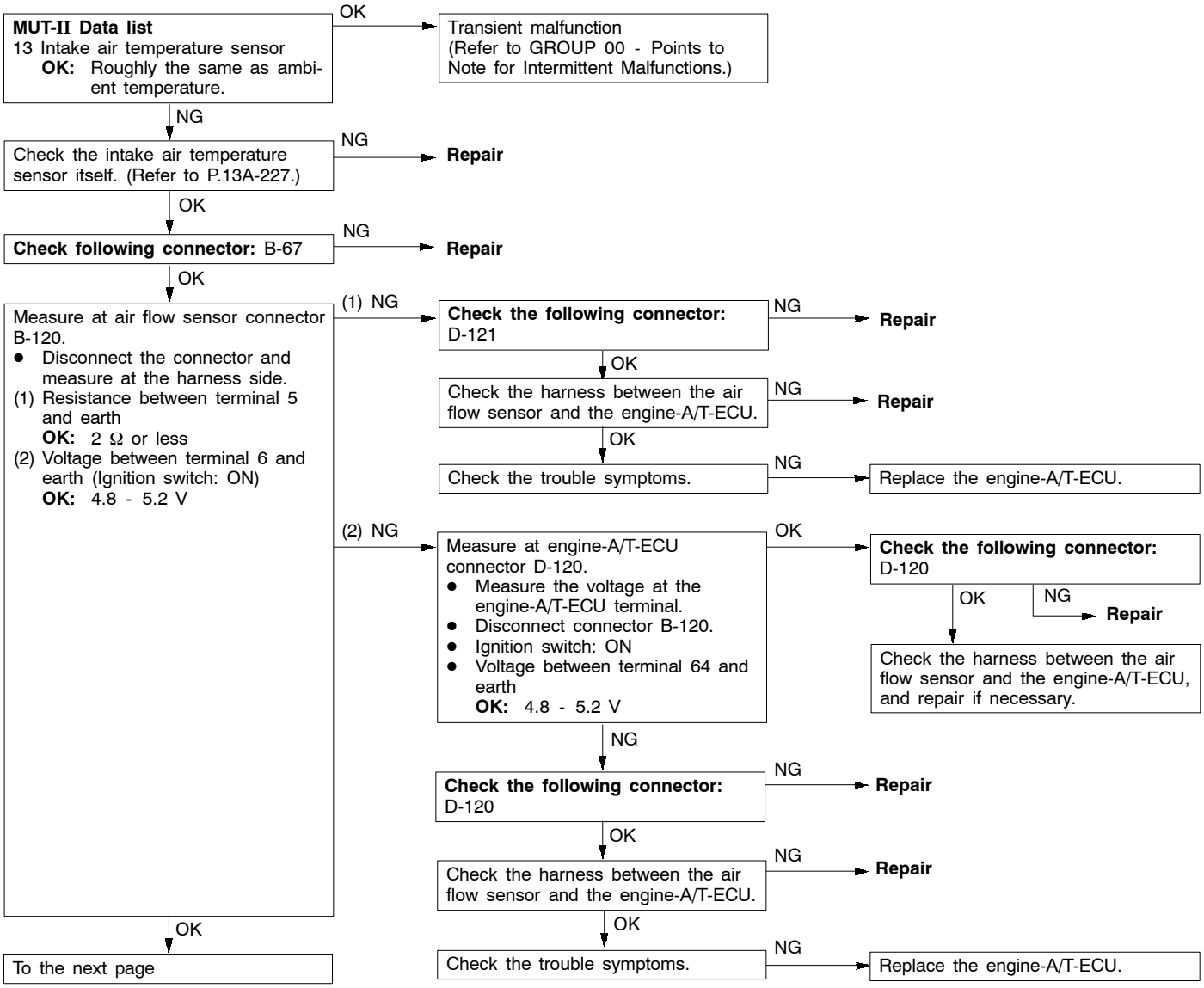


Purchased from www.WorkshopManuals.co.uk

www.WorkshopManuals.co.uk

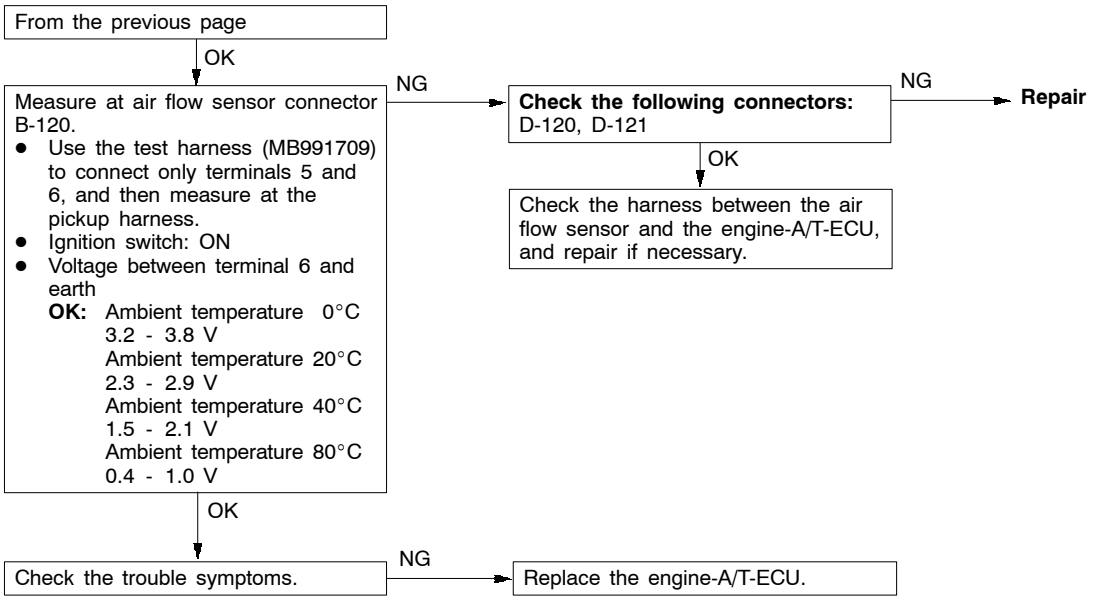


Purchased from www.WorkshopManuals.co.uk

www.WorkshopManuals.co.uk

| Code No.14 Throttle position sensor (2nd channel) system | Probable cause |
|---|---|
| The throttle valve controller judges a malfunction, and then transmit the result to the engine-A/T-ECU.<br>Range of Check<br>● Ignition switch: ON<br>● The throttle position sensor (1st channel) is normal.<br>Set Conditions<br>● The sensor output voltage is 0.2 V or less for four seconds.<br>or<br>● The sensor output voltage is 4.85 V or more and the throttle position sensor (1st channel) output voltage is 1.2 V or more for four seconds.<br>or<br>● The throttle position sensor (1st channel) and throttle position sensor (2nd channel) combination output voltage is outside 4 - 6 V. | ● Malfunction of throttle position sensor (2nd channel)<br>● Open or short circuit in the throttle position sensor (2nd channel) circuit or loose connector contact<br>● Malfunction of throttle valve controller<br>● Malfunction of engine-A/T-ECU |

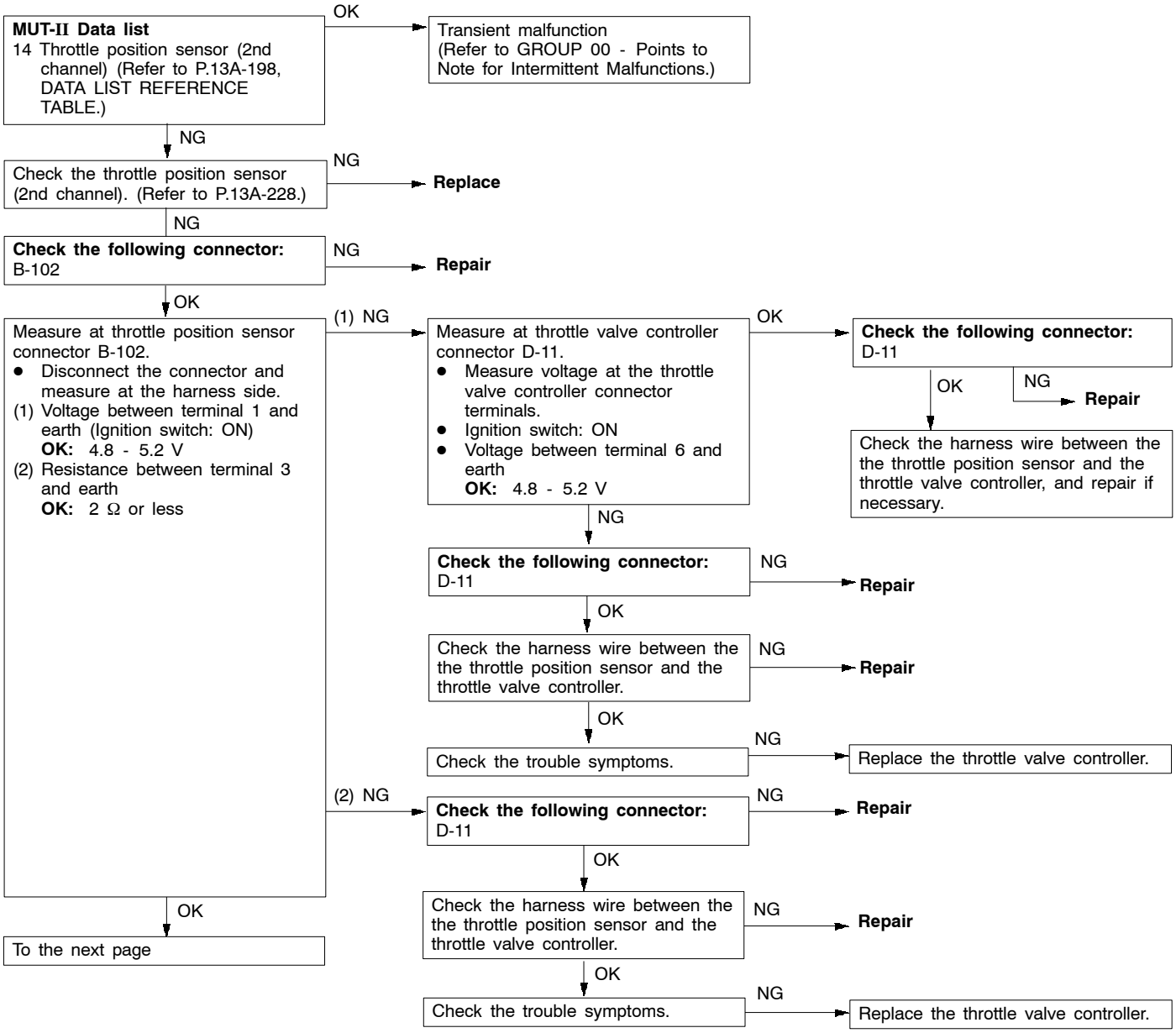


Purchased from www.WorkshopManuals.co.uk

www.WorkshopManuals.co.uk

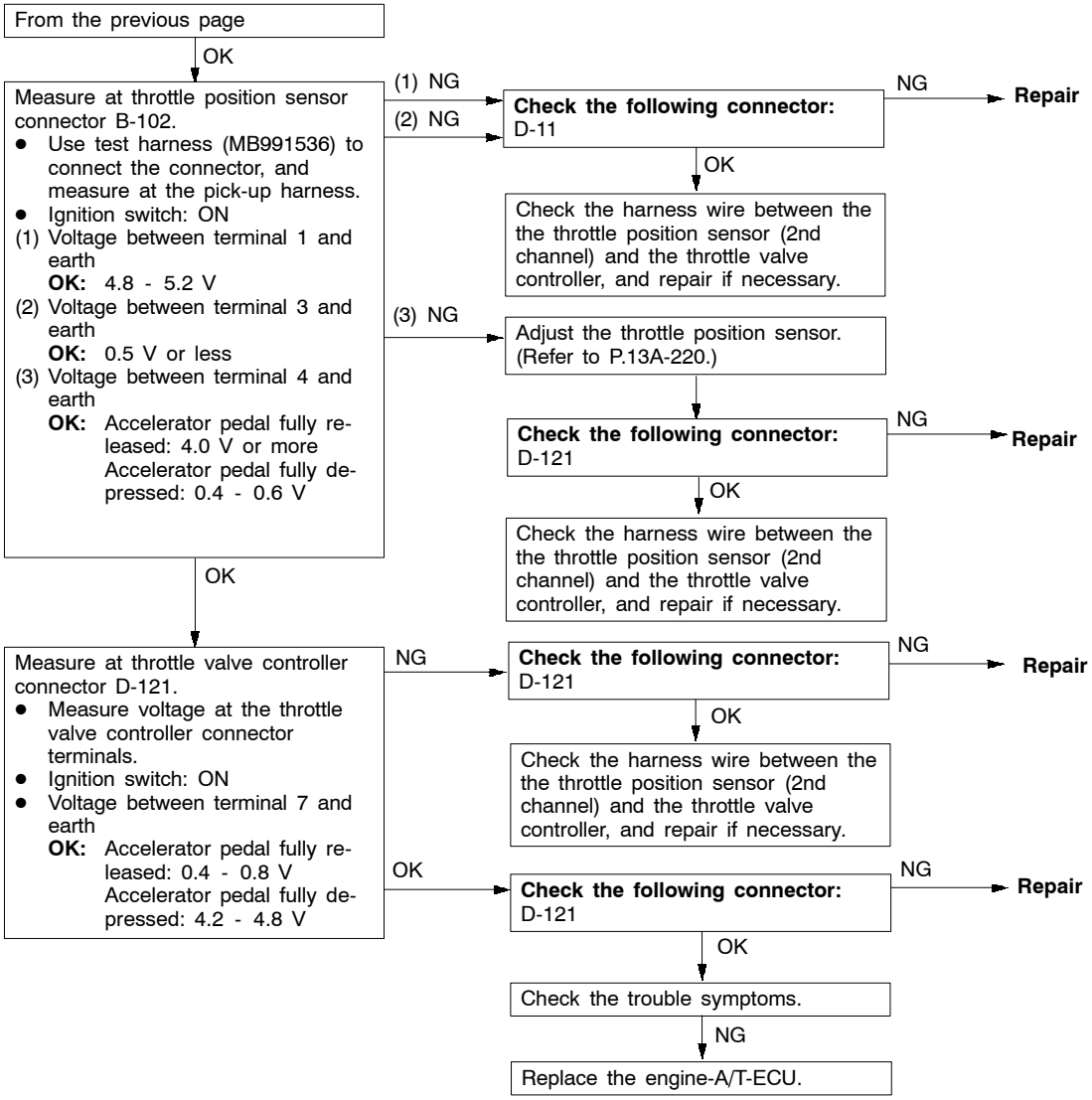


| Code No.21 Engine coolant temperature sensor system | Probable cause |
|---|---|
| Range of Check<br>● Engine: Two seconds after the engine has been started<br>Set Conditions<br>● The sensor output voltage is 4.6 V or more for four seconds (equivalent to -45°C of engine coolant temperature)<br>or<br>● The sensor output voltage is 0.1 V or less for four seconds (equivalent to 140°C of engine coolant temperature) | ● Malfunction of engine coolant temperature sensor<br>● Open or short circuit in the engine coolant temperature sensor circuit or loose connector contact<br>● Malfunction of engine-A/T-ECU |
| Range of Check<br>● Engine: After starting<br>Set Conditions<br>● The engine coolant temperature has reduced from over 40°C to less than 40°C, and that condition has lasted for five minutes or more. | |

Purchased from www.WorkshopManuals.co.uk

www.WorkshopManuals.co.uk

**MUT-II Data list**
21 Engine coolant temperature sensor
**OK:** When the engine is cold, the temperature is roughly the same as ambient temperature. If warm, it is 80 - 120°C.

OK → Transient malfunction (Refer to GROUP 00 - Points to Note for Intermittent Malfunctions.)

NG ↓

Measure at engine coolant temperature sensor connector B-56.
- Disconnect the connector and measure at the harness side.
- Resistance between terminals 1 and 2

**OK:** At 20°C of engine coolant temperature: 2.1 - 2.7 kΩ
At 80°C of engine coolant temperature: 0.26 - 0.36 kΩ

NG → **Replace**

OK ↓

**Check the following connector:** B-56

NG → **Repair**

OK ↓

Measure at engine coolant temperature sensor connector B-56.
- Disconnect the connector and measure at the harness side.

(1) Voltage between terminal 1 and earth
(Ignition switch: ON)
**OK:** 4.8 - 5.2 V
(2) Resistance between terminal 2 and earth
**OK:** 2 Ω or less

(1) NG →

Measure at engine-ECU connector D-120.
- Measure the voltage at the engine-A/T-ECU terminal.
- Disconnect connector B-56.
- Ignition switch: ON
- Voltage between terminal 44 and earth

**OK:** 4.8 - 5.2 V

OK → **Check the following connector:** D-120

OK ↓ Check the harness wire between the engine coolant temperature sensor and the engine-A/T-ECU.

NG → **Repair**

NG ↓

**Check the following connector:** D-120

NG → **Repair**

OK ↓

Check the harness wire between the engine coolant temperature sensor and the engine-A/T-ECU.

NG → **Repair**

OK ↓

Check the trouble symptoms.

NG → Replace the engine-A/T-ECU.

(2) NG →

**Check the following connector:** D-121

NG → **Repair**

OK ↓

Check the harness wire between the engine coolant temperature sensor and the engine-A/T-ECU.

NG → **Repair**

OK ↓

Check the trouble symptoms.

NG → Replace the engine-A/T-ECU.

OK ↓

To the next page

Purchased from www.WorkshopManuals.co.uk

www.WorkshopManuals.co.uk

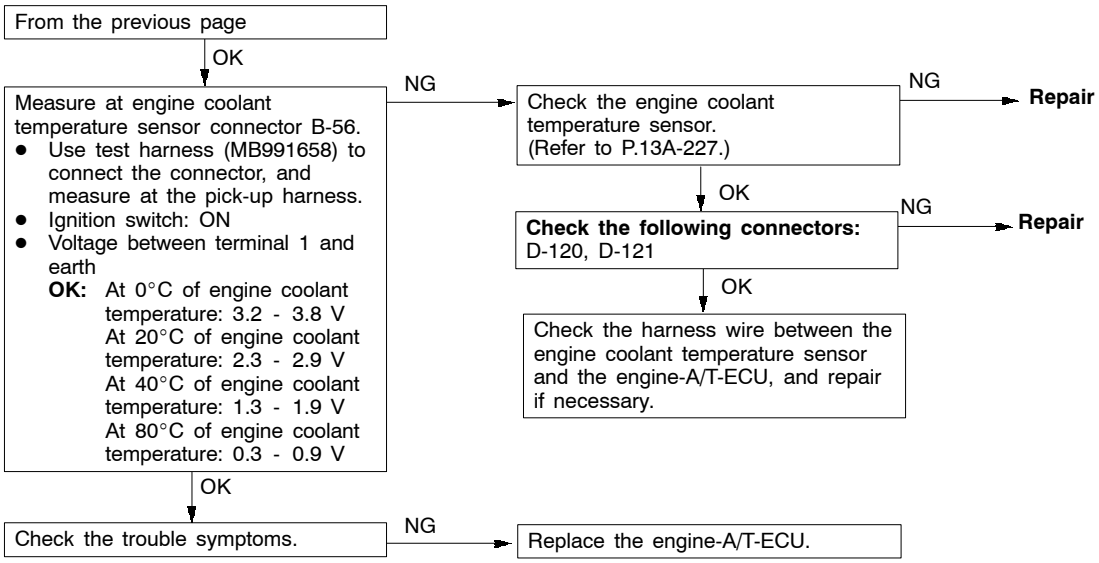


| Code No.22 Crank angle sensor system | Probable cause |
|---|---|
| Range of Check<br>● Engine is cranking<br>Set Conditions<br>● Sensor output voltage does not change for 4 seconds (no pulse signal input). | ● Malfunction of the crank angle sensor.<br>● Open or short circuit in the crank angle sensor circuit or loose connector contact.<br>● Malfunction of engine-A/T-ECU |

Purchased from www.WorkshopManuals.co.uk

www.WorkshopManuals.co.uk

**MUT-II Data list**
22 Crank angle sensor (Refer to P.13A-198, DATA LIST REFERENCE TABLE.)

- OK → Intermittent malfunction (Refer to GROUP 00 - Points to Note for Intermittent Malfunctions.)
- NG ↓

**Check the following connector:**
B-52

- NG → **Repair**
- OK ↓

Measure at the crank angle sensor connector B-52.
- Disconnect the connector and measure at the harness side.

(1) The resistance between terminal 1 and earth
**OK:** 2 Ω or less
(2) The voltage between terminal 2 and earth
(Ignition switch: ON)
**OK:** 4.8 - 5.2 V
(3) The voltage between terminal 3 and earth
(Ignition switch: ON)
**OK:** System voltage

- (1) NG → Check the harness between the crank angle sensor and earth, and repair if necessary.
- (2) NG → Measure at engine-A/T-ECU connector D-120.
  - Measure the voltage at the engine-A/T-ECU terminal.
  - Disconnect the connector B-52
  - Ignition switch: ON
  - The voltage between terminal 45 and earth.
  **OK:** 4.8 - 5.2 V
  - OK → **Check the following connector**: D-120
    - OK ↓ Check the harness wire between the crank angle sensor and the engine-A/T-ECU, and repair if necessary.
    - NG → **Repair**
  - NG ↓ **Check the following connector:** D-120
    - NG → **Repair**
    - OK ↓ Check the harness wire between the crank angle sensor and the engine-A/T-ECU.
      - NG → **Repair**
      - OK ↓ Check the trouble symptoms.
        - NG → Replace the engine-A/T-ECU.
- (3) NG → **Check the following connector:** B-25X
  - NG → **Repair**
  - OK ↓ Check the harness wire between the crank angle sensor and the engine control relay, and repair if necessary.
- OK ↓

Use an analyzer to measure the output waveform at the crank angle sensor connector B-52.
- Use the test harness (MD998478) to connect the connector, and measure at the pickup harness side.
- Engine: Idling
- The voltage between terminal 2 and earth
  **OK:** A normal waveform should be displayed as described on P.13A-212 (Inspection Procedure Using an Analyzer). Its maximum value should be 4.8 V or more, and its minimum value should be 0.6 V or less with no noise in waveform

- NG → Check the crank angle sensor vane
  - NG → **Replace**
  - OK ↓ Replace the crank angle sensor
  - OK ↓ Check the trouble symptoms.
  - NG ↓ **Check the following connectors:** B-25X, D-120
    - NG → **Repair**
    - OK ↓ Check the harness wires between the crank angle sensor and the engine-A/T-ECU, crank angle sensor and the engine control relay, and the crank angle sensor and earth. Then, repair if necessary.
- OK ↓ Check the trouble symptoms.
  - NG ↓ Replace the engine-A/T-ECU.

Purchased from www.WorkshopManuals.co.uk

www.WorkshopManuals.co.uk

| Code No.23 Camshaft position sensor system | Probable cause |
|---|---|
| Range of Check<br>● After the engine was started<br>Set Conditions<br>● The sensor output voltage does not change for 4 seconds (no pulse signal input). | ● Malfunction of the camshaft position sensor<br>● Open or short circuit in the camshaft position sensor circuit or loose connector contact.<br>● Malfunction of engine-A/T-ECU |

Purchased from www.WorkshopManuals.co.uk

www.WorkshopManuals.co.uk

**Check the following connector:**
B-110

NG → **Repair**

OK ↓

Measure at intermediate connector B-110
- Disconnect the connector and measure at the harness side.

(1) The voltage between terminal 1 and earth
(Ignition switch: ON)
**OK:** System voltage

(2) The voltage between terminal 2 and earth
(Ignition switch: ON)
**OK:** 4.8 - 5.2 V

(3) The resistance between terminal 3 and earth
**OK:** 2 Ω or less

(1) NG → **Check the following connector:**
B-25X

NG → **Repair**

OK ↓

Check the harness wire between the intermediate connector and the engine control relay, and repair if necessary.

(2) NG → Measure at engine-A/T-ECU connector D-120.
- Measure the voltage at the engine-A/T-ECU terminal.
- Disconnect connector B-110.
- Ignition switch: ON
- The voltage between terminal 50 and earth
**OK:** 4.8 - 5.2 V

OK → **Check the following connector**:
D-120

OK ↓ / NG → **Repair**

Check the harness wire between the intermediate connector and the engine-A/T-ECU, and repair if necessary.

NG ↓

**Check the following connector:**
D-120

NG → **Repair**

OK ↓

Check the harness wire between the intermediate connector and the engine-A/T-ECU.

NG → **Repair**

OK ↓

Check the trouble symptoms.

NG → Replace the engine-A/T-ECU.

(3) NG → Check the harness wire between the intermediate connector and earth, and repair if necessary.

OK ↓

Use an analyzer to measure the output waveform at intermediate connector B-110.
- Use test harness (MB991658) to connect the connector, and measure at the pick-up harness.
- Engine: Idling
- Selector lever position: P
- The voltage between terminal 2 and earth
**OK:** A normal waveform should be displayed as described on P.13A-212 (Inspection Procedure Using an Analyzer), its maximum value should be 4.8 V or more, and its minimum value should be 0.6 V or less with no noise in waveform.

(1) NG → **Check the following connector:**
B-23

NG → **Repair**

OK ↓

Check the harness wire between the camshaft position sensor and the intermediate connector.

NG → **Repair**

OK ↓

Replace the camshaft position sensor

↓

Check the trouble symptoms.

NG ↓

Check the camshaft position sensing cylinder

NG → **Replace**

OK ↓

**Check the following connectors:**
B-25X, D-120

NG → **Repair**

OK ↓

Check the harness wires between the intermediate connector and the engine-A/T-ECU, the intermediate connector and the engine control relay, and the intermediate connector and earth. Then, repair if necessary.

OK ↓

Check the trouble symptoms.

OK → Intermittent malfunction
(Refer to GROUP 00 - Points to Note for Intermittent Malfunctions.)

NG ↓

Replace the engine-A/T-ECU.

Purchased from www.WorkshopManuals.co.uk

www.WorkshopManuals.co.uk

| Code No.24 Vehicle speed sensor system | Probable cause |
|---|---|
| Range of Check<br>● Engine: Two seconds after the engine was started<br>● Idle switch: OFF<br>● Engine speed: 2,500 r/min or more<br>● During high engine load<br>Set Conditions<br>● The sensor output voltage does not change for 4 seconds (no pulse signal input). | ● Malfunction of the vehicle speed sensor<br>● Open or short circuit in the vehicle speed sensor circuit or loose connector contact<br>● Malfunction of engine-A/T-ECU |

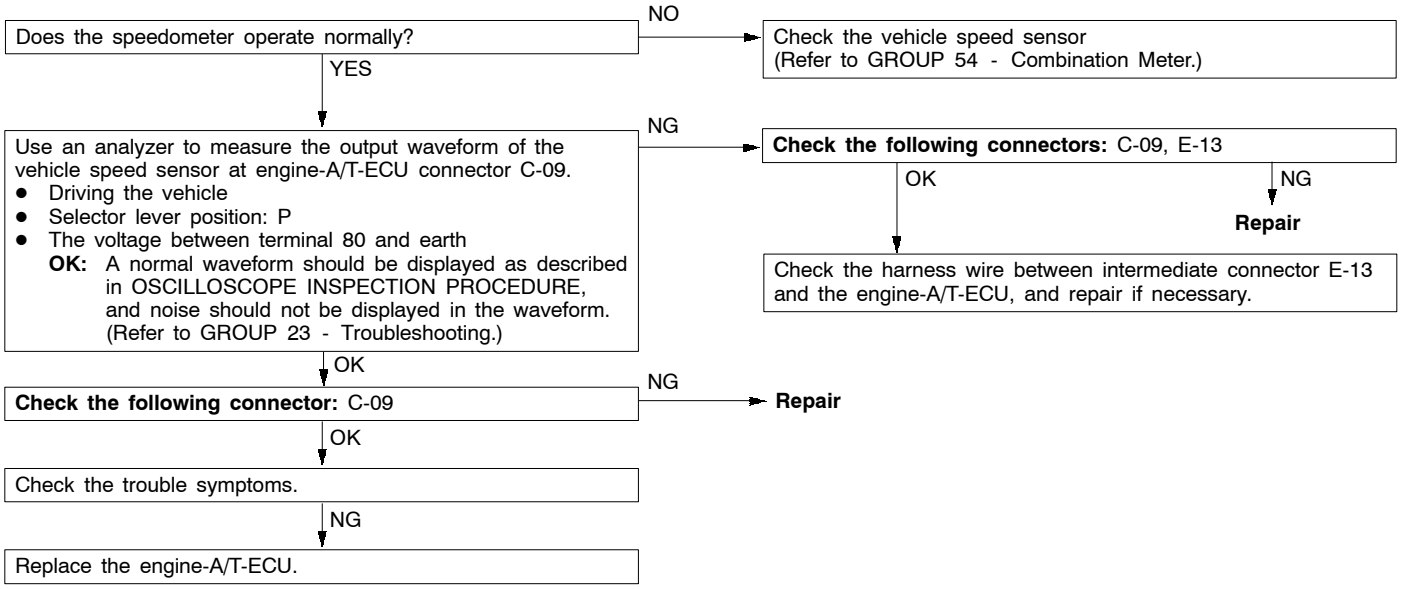


Purchased from www.WorkshopManuals.co.uk

www.WorkshopManuals.co.uk

| Code No.25 Barometric pressure sensor system | Probable cause |
|---|---|
| Range of Check<br>● Two seconds have passed since the ignition switch is turned ON or the engine starting process is completed.<br>● Battery voltage: 8 V or more<br>Set Conditions<br>● The sensor output voltage is 4.5 V or more for four seconds (equivalent to 114 kPa of barometric pressure)<br>or<br>● The sensor output voltage is 0.2 V or less (equivalent to 53 kPa of barometric pressure) | ● Malfunction of barometric pressure sensor<br>● Open or short circuit in barometric pressure sensor circuit or loose connector contact<br>● Malfunction of engine-A/T-ECU |

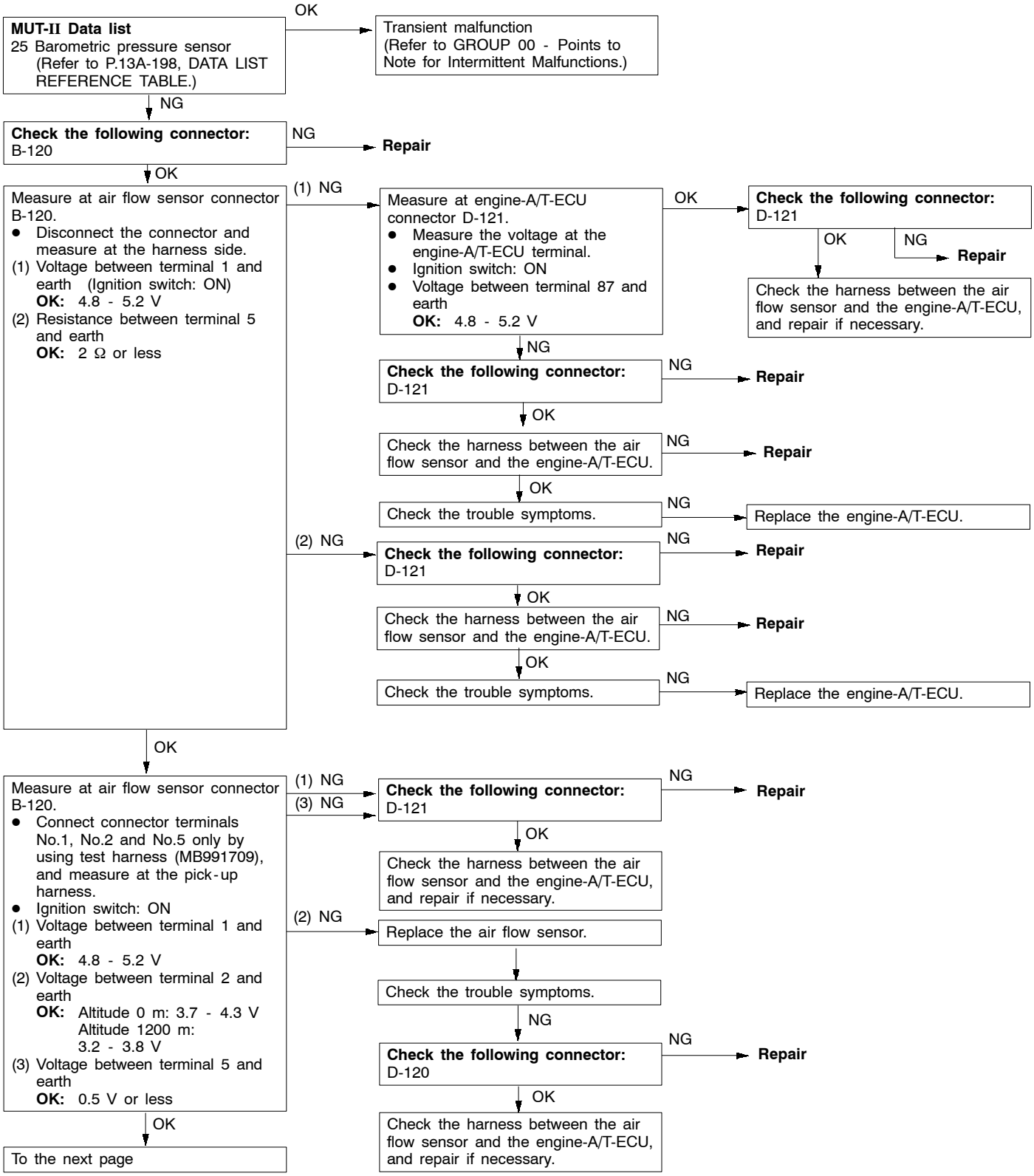


Purchased from www.WorkshopManuals.co.uk

www.WorkshopManuals.co.uk

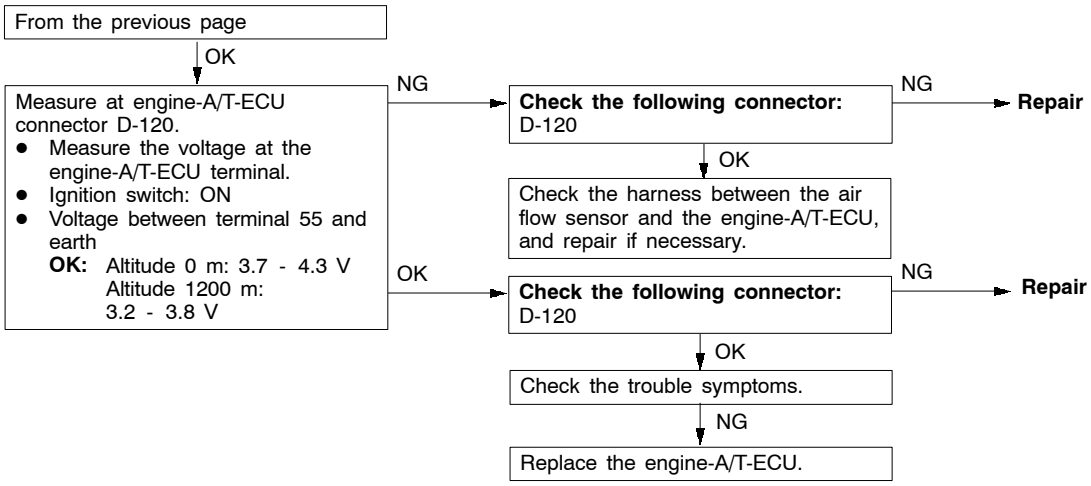


| Code No.31 Detonation sensor system | Probable cause |
|---|---|
| Range of Check<br>● Engine: Two seconds after the engine has been started<br>Set Conditions<br>● Changes in sensor output voltage (detonation sensor peak voltage per 1/3 crankshaft rotation) in 200 consecutive cycles are 0.08 V or less. | ● Malfunction of the detonation sensor<br>● Open or short circuit in the detonation sensor circuit or loose connector contact<br>● Malfunction of engine-A/T-ECU |

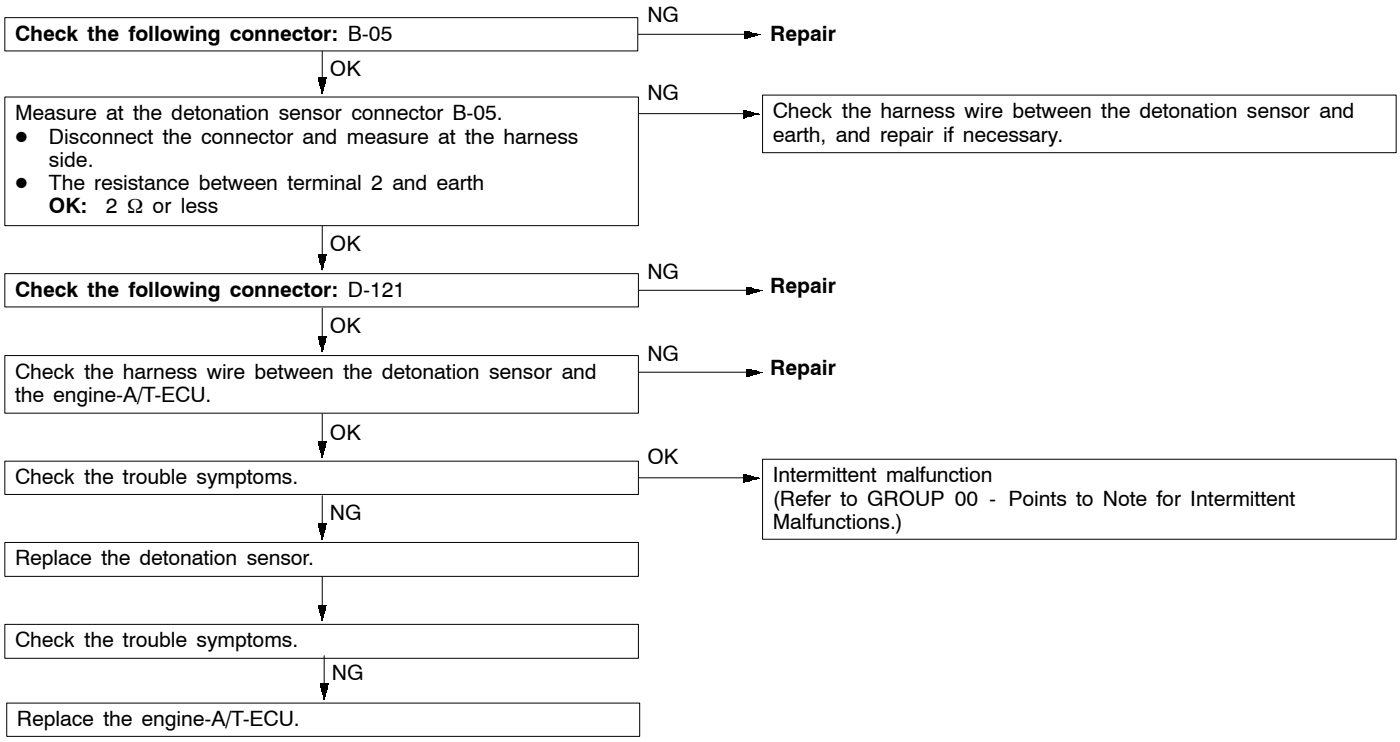


Purchased from www.WorkshopManuals.co.uk

www.WorkshopManuals.co.uk

| Code No.41 Injector system | Probable cause |
|---|---|
| Range of Check<br>● The engine speed is 4,000 r/min or less.<br>● The battery voltage is 10 V or more.<br>● The fuel cut operation or the injector operation (by carrying out the Actuator Test) is not in progress.<br>Set Conditions<br>● The injector driver is not transmitting a injector open circuit check signal for four seconds. | ● Malfunction of injector<br>● Open or short circuit in the injector circuit or loose connector contact<br>● Malfunction of engine-A/T-ECU |

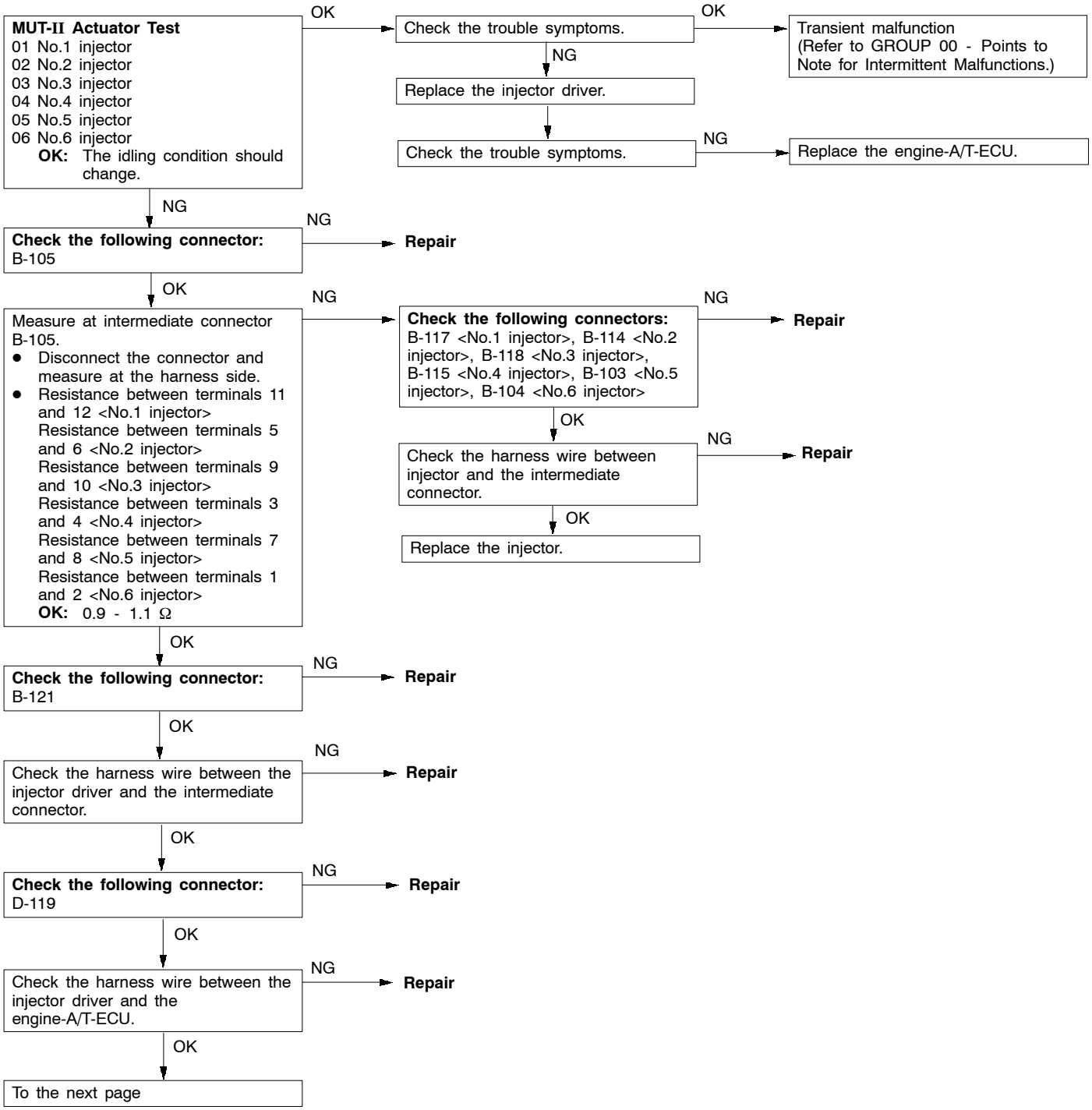


Purchased from www.WorkshopManuals.co.uk

www.WorkshopManuals.co.uk

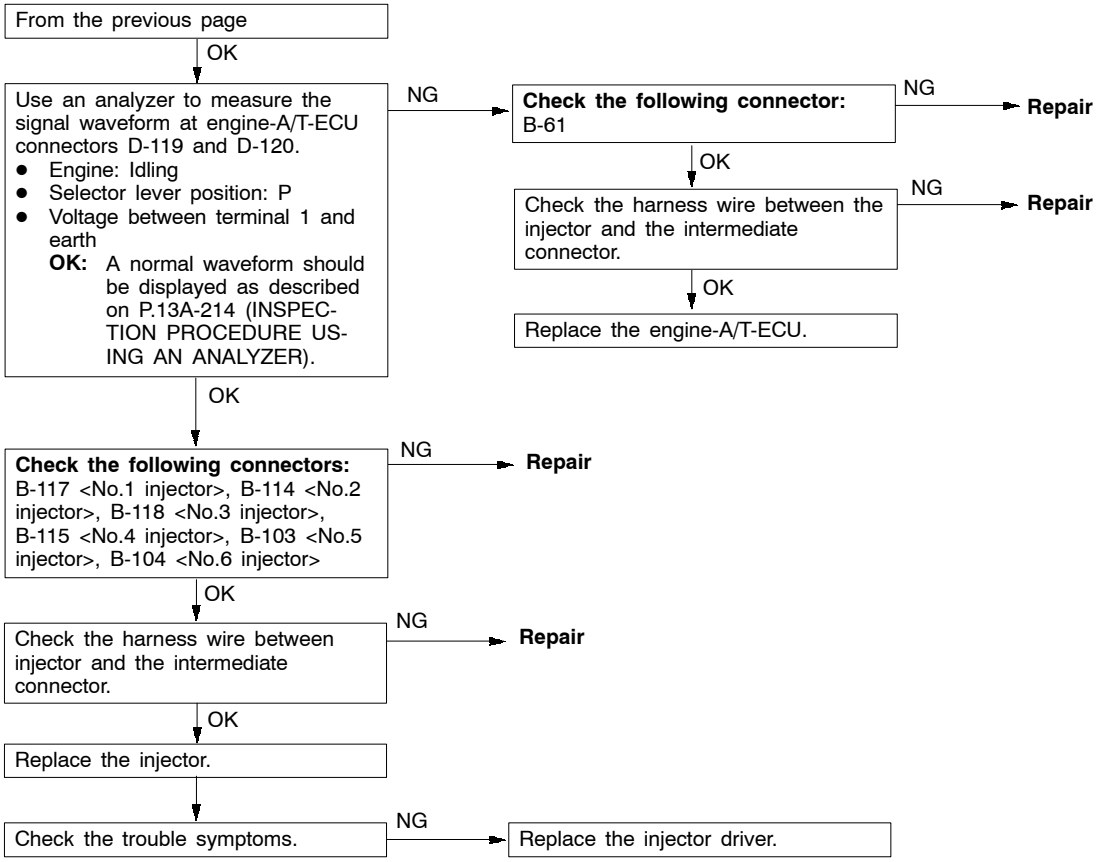


| Code No.44, 52, 53 Ignition coil (incorporating power transistor) system | Probable cause |
|---|---|
| Range of Check<br>● Engine speed is approx. 50 - 4,000 r/min.<br>● Engine is not cranking.<br>Set Conditions<br>● The ignition failure sensor does not send a signal about a certain cylinder for four seconds. However, except that the ignition failure sensor does not send a signal about all of cylinders. | ● Malfunction of the ignition coil<br>● Malfunction of the ignition failure sensor<br>● Malfunction of spark plug<br>● Open or short circuit in the primary ignition circuit or loose connector contact<br>● Malfunction of engine-A/T-ECU |

Purchased from www.WorkshopManuals.co.uk

www.WorkshopManuals.co.uk

Check the ignition coil. (Refer to GROUP 16 - Ignition System.)
- NG → **Replace**
- OK ↓

Check the ignition failure sensor. (Refer to GROUP 16 - Ignition System.)
- NG → **Replace**
- OK ↓

Measure at the ignition coil connectors B-101, B-108, B-112, B-113, B-116, B-119.
- Disconnect the connector, and measure at the harness side.

(1) Voltage between 1 and earth (Ignition switch: ON)
**OK:** System voltage
(2) Voltage between 3 and earth (Engine: cranking)
**OK:** 0.5 - 4.0 V
(3) Continuity between 2 and earth
**OK:** Continuity

- (1) NG → **Check the following connectors:** B-07, B-107, E-13, D-223 <LHD>
  - OK ↓
  - NG → **Repair**
  - Check trouble symptom. ↓
  - Check and repair the harness wire between the ignition coil and ignition failure sensor.
    Check and repair the harness wire between the ignition failure sensor and ignition switch.
- (2) NG → **Check the following connectors:** B-107, D-119
  - OK ↓
  - NG → **Repair**
  - Check trouble symptom. ↓
  - NG ↓
  - Check the harness wire between the engine-A/T-ECU and the ignition coil.
    - OK ↓
    - NG → **Repair**
  - Replace the engine-A/T-ECU.
- (3) NG → Check and repair the harness wire between the ignition coil and earth.
- OK ↓

**Check the following connectors:** B-101, B-108, B-112, B-113, B-116, B-119
- OK ↓
- NG → **Repair**

Check trouble symptom.
- NG ↓

Measure at the ignition failure sensor connector B-04.
- Disconnect the connector, and measure at the harness side.

(1) Voltage between 2 and earth (Ignition switch: ON)
**OK:** 4 V or more
(2) Continuity between 1 and earth
**OK:** Continuity

- (1) NG → There is short circuit or open circuit in the ignition signal output harness of the ignition failure sensor. Check and repair the harness.
- (2) NG → Check and repair the harness wire between the ignition failure sensor and earth.
- OK ↓

Measure at the engine-A/T-ECU connector D-120.
- Connect the connector.
- Voltage between 45 and earth (Engine: 3,000 r/min)
  **OK:** 0.3 - 3.0 V

- NG → **Check the following connectors:** B-04, D-120
  - OK ↓
  - NG → **Repair**
  - Check the harness wire between the engine-A/T-ECU and the ignition failure sensor.
    - OK ↓
    - NG → **Repair**
  - Replace the ignition failure sensor.
- OK ↓

Replace the engine-A/T-ECU.

Purchased from www.WorkshopManuals.co.uk

www.WorkshopManuals.co.uk

| Code No.54 Immobilizer system | Probable cause |
|---|---|
| Range of Check<br>● Ignition switch: ON<br>Set Conditions<br>● Improper communication between the engine-A/T-ECU and the immobilizer-ECU | ● Open or short circuit, or loose connector contact<br>● Malfunction of the immobilizer-ECU<br>● Malfunction of the engine-A/T-ECU |

NOTE
(1) If the registered ignition keys are close each other when starting the engine, radio interference may cause this code to be displayed.
(2) This code may be displayed when registering the key encrypted code.

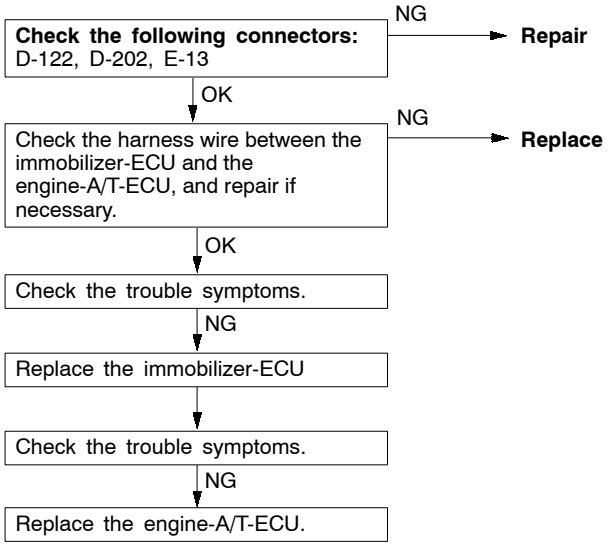


Purchased from www.WorkshopManuals.co.uk

www.WorkshopManuals.co.uk

| Code No.56 Abnormal fuel pressure | Probable cause |
|---|---|
| Range of Check<br>● Ignition switch: ON<br>Set Conditions<br>● The sensor output voltage is 4.8V or more, or 0.2 V or less for four seconds. | ● Malfunction of of fuel pressure sensor<br>● Open or short circuit in the fuel pressure sensor circuit or loose connector contact<br>● Malfunction of engine-A/T-ECU |
| Range of Check<br>● The following conditions are detected temporarily after the engine has been started.<br>(1) Engine speed: 1,000 r/min or more<br>(2) Fuel pressure: 2 MPa or more<br>● Engine running<br>Set Conditions<br>● The fuel pressure is 6.9 MPa or more, or 2 MPa or less for four seconds. | ● Malfunction of high-pressure fuel pump<br>● Clogging of high-pressure fuel lines |
| This diagnosis code will also be output when air is trapped into the high-pressure fuel lines (such as poor fuel level). In that case, the air can be evacuated by operating the engine for at least 15 seconds at 2,000 r/min. After the repair, use the MUT-II to erase the diagnosis code. | ● Air trapped due to poor fuel level |

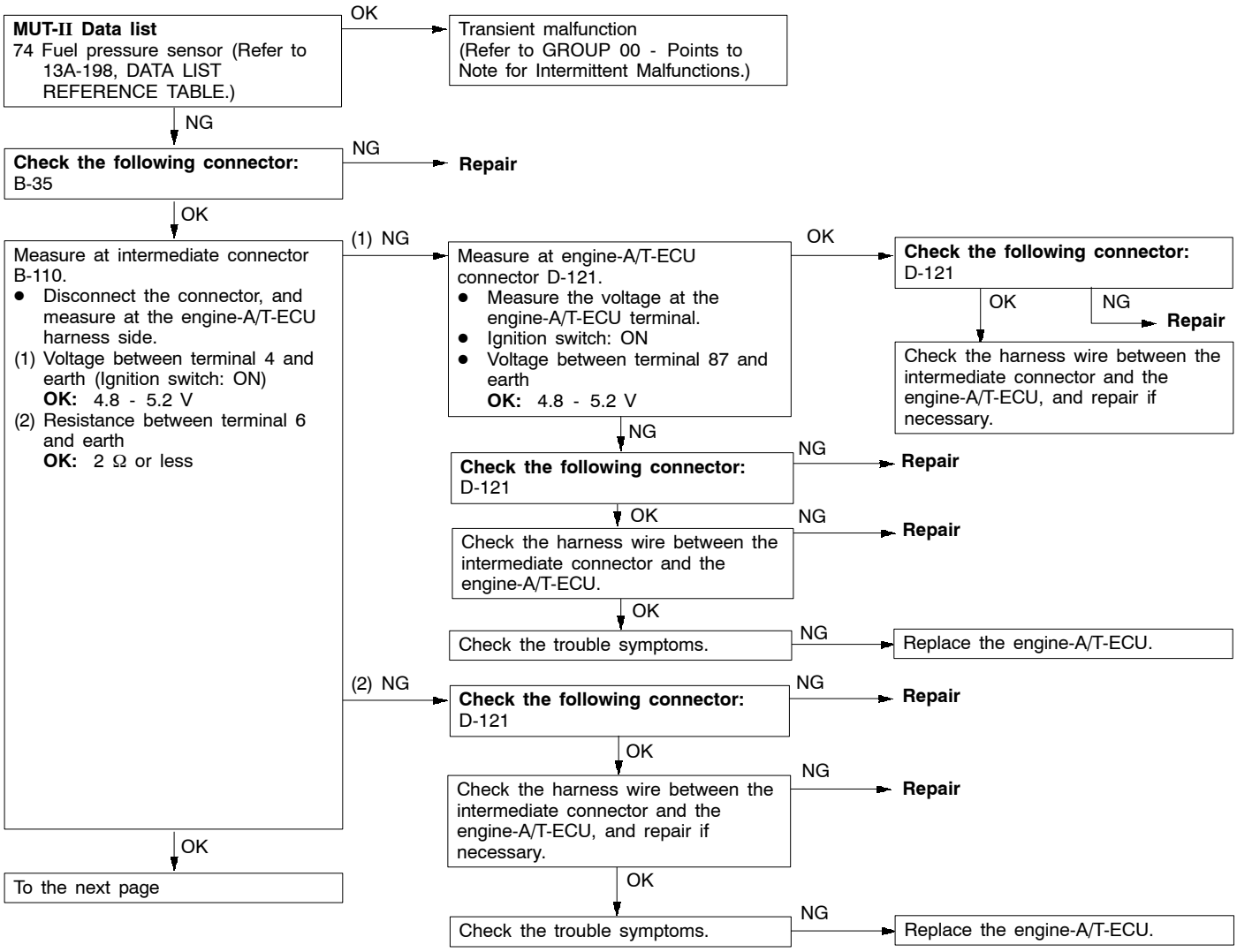


Purchased from www.WorkshopManuals.co.uk

www.WorkshopManuals.co.uk

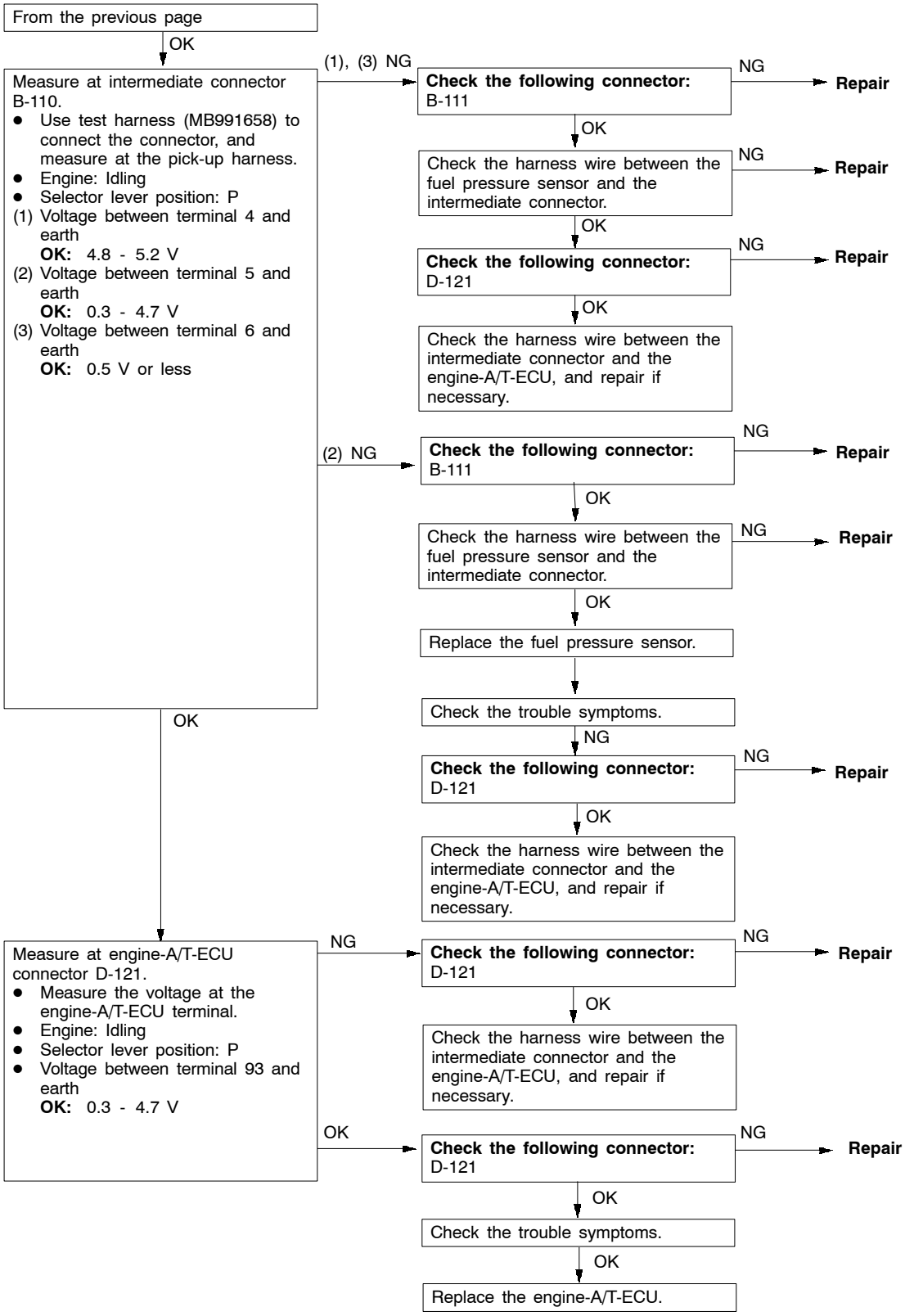


Purchased from www.WorkshopManuals.co.uk

www.WorkshopManuals.co.uk

| Code No.64 Alternator FR terminal system | Probable cause |
|---|---|
| Range of Check<br>● Engine speed: 50 r/min or more<br>Set Conditions<br>● Input voltage from the alternator FR terminal is system voltage for 20 seconds. | ● Open circuit in alternator FR terminal circuit<br>● Malfunction of engine-A/T-ECU |

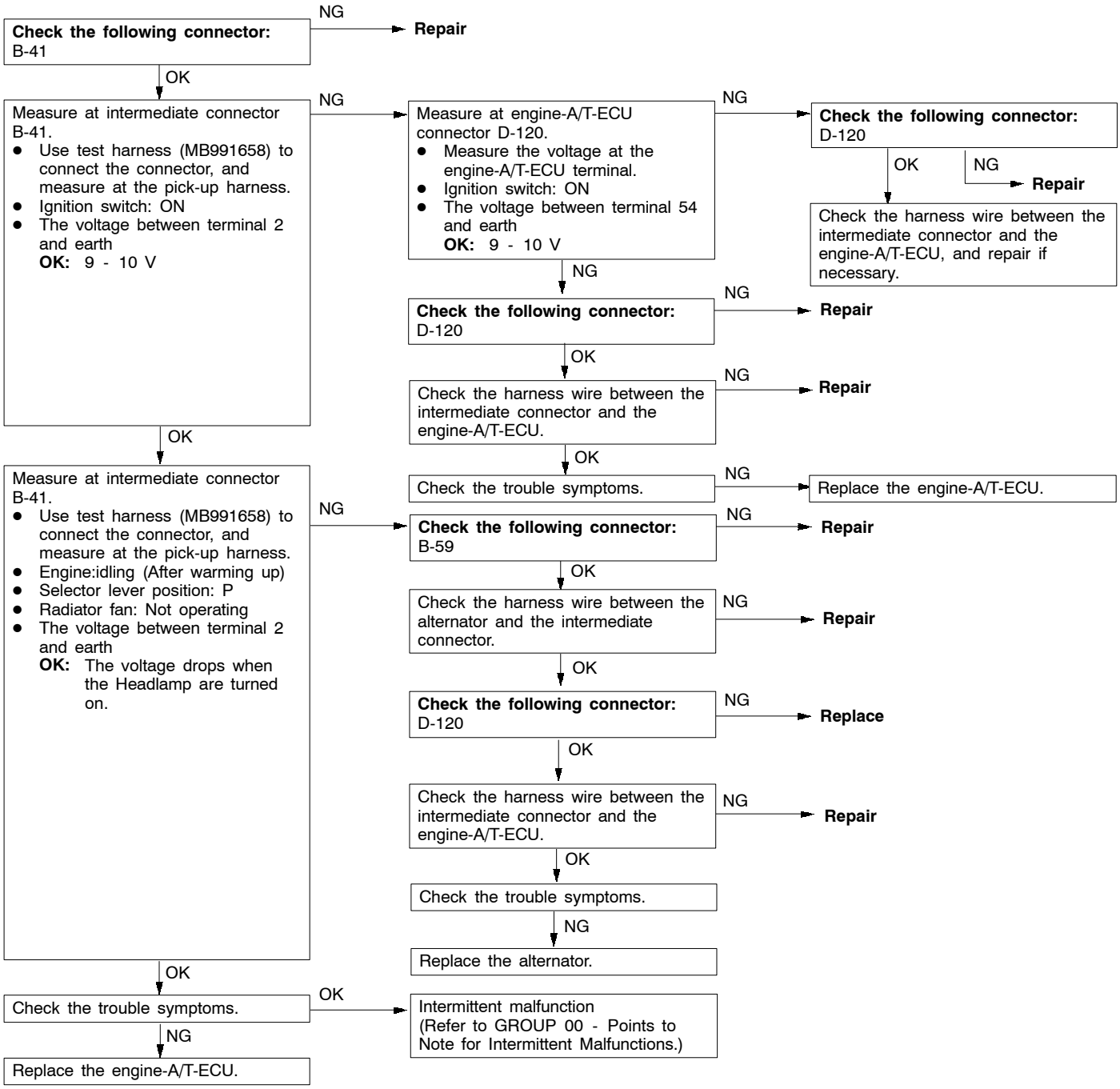


Purchased from www.WorkshopManuals.co.uk

www.WorkshopManuals.co.uk

| Code No.77 Accelerator pedal position sensor (2nd channel) system | Probable cause |
|---|---|
| Range of Check<br>● Accelerator pedal position sensor (1st channel) is normal.<br>● Communication between the engine-A/T-ECU and the throttle valve controller is normal.<br>Set Conditions<br>● Output voltage of the accelerator pedal position sensor (2nd channel) is 0.2 V or less for one second<br>or<br>● Output voltage of the accelerator pedal position sensor (1st channel) is 2.5 V or less, and output voltage of the accelerator pedal position sensor (2nd channel) is 4.5 V or more for one second.<br>or<br>● Difference between the accelerator pedal position sensor (1st and 2nd channels) output voltages exceeds 1.0 V (i.e. when the throttle valve opening angle changes slightly). | ● Malfunction of accelerator pedal position sensor (2nd channel)<br>● Open or short circuit in accelerator pedal position sensor (2nd channel) circuit or loose connector contact<br>● Malfunction of the throttle valve controller<br>● Malfunction of engine-A/T-ECU |

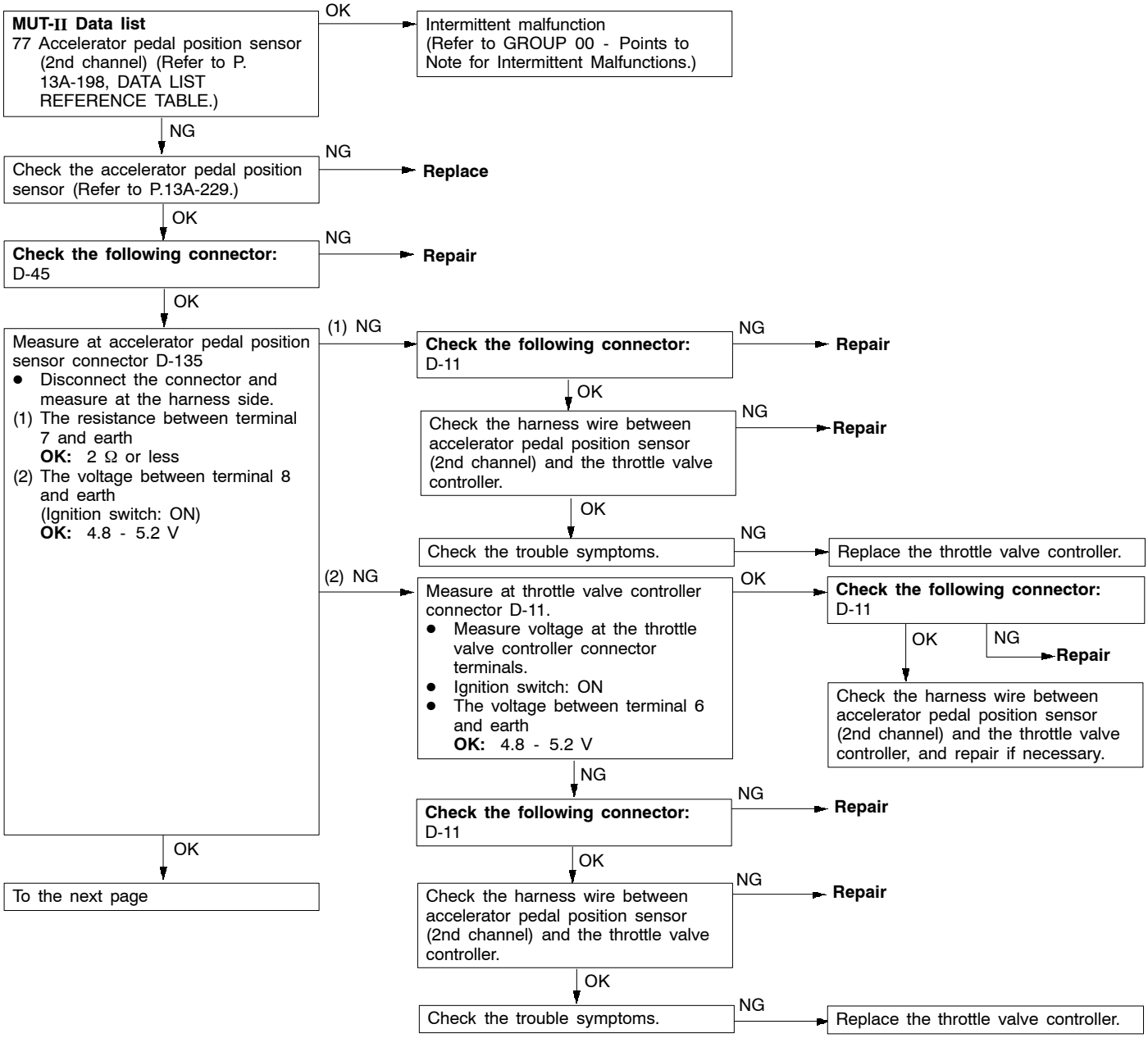


Purchased from www.WorkshopManuals.co.uk

www.WorkshopManuals.co.uk

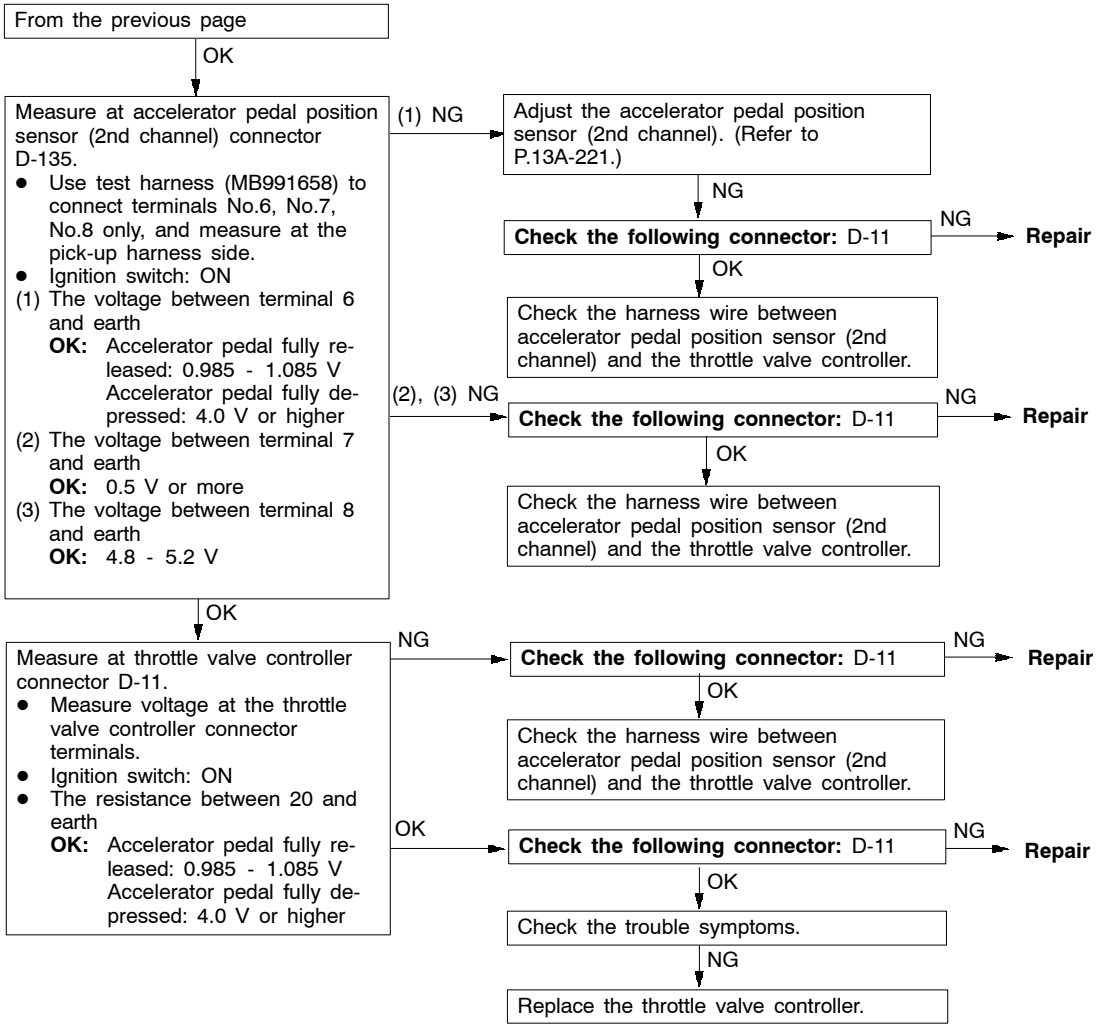


Purchased from www.WorkshopManuals.co.uk

www.WorkshopManuals.co.uk

| Code No.78 Accelerator pedal position sensor (1st channel) system | Probable cause |
|---|---|
| Range of Check<br>● Accelerator pedal position sensor (2nd channel) is normal.<br>● Communication between the engine-A/T-ECU and the throttle valve controller is normal.<br>Set Conditions<br>● The output voltage of accelerator pedal position sensor (1st channel) is 0.2 V or less for one second.<br>or<br>● The output voltage of accelerator pedal position sensor (2nd channel) is 2.5 V or less, and that of accelerator pedal position sensor (1st channel) is 4.5 V or more for one second<br>or<br>● The difference between accelerator pedal position sensor (1st channel) and accelerator pedal position sensor (2nd channel) output voltages is 1.0 V or more (i.e. the throttle opening angle changes slightly).<br>or<br>● The output voltage of accelerator pedal position sensor (1st channel) is 1.1 V or more for one second when the accelerator pedal position switch is turned on. | ● Malfunction of accelerator pedal position sensor (1st channel)<br>● Open or short circuit in the accelerator pedal position sensor (1st channel) circuit or loose connector contact<br>● Accelerator pedal position switch seized ON<br>● Malfunction of throttle valve controller<br>● Malfunction of engine-A/T-ECU |

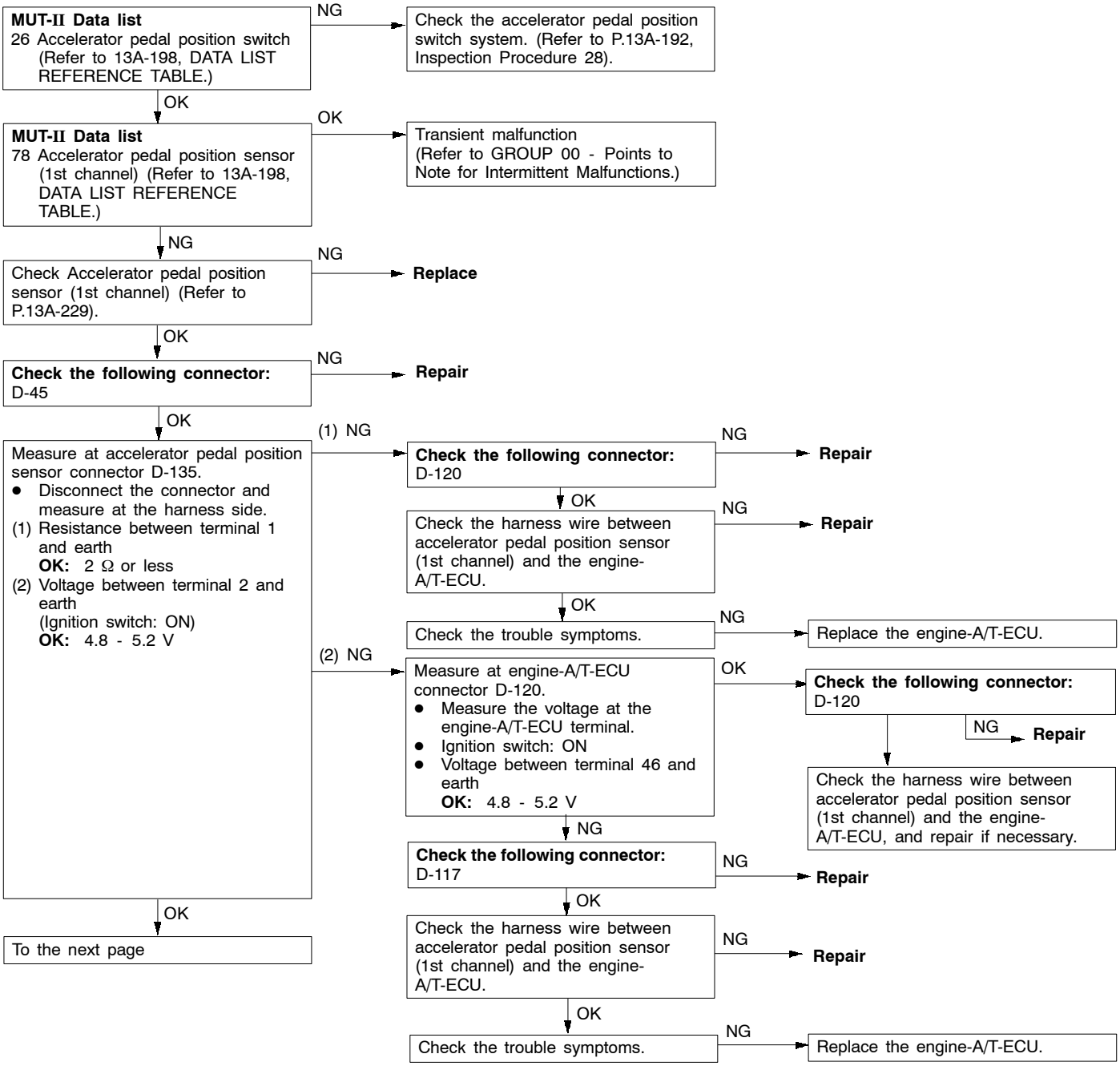


Purchased from www.WorkshopManuals.co.uk

www.WorkshopManuals.co.uk

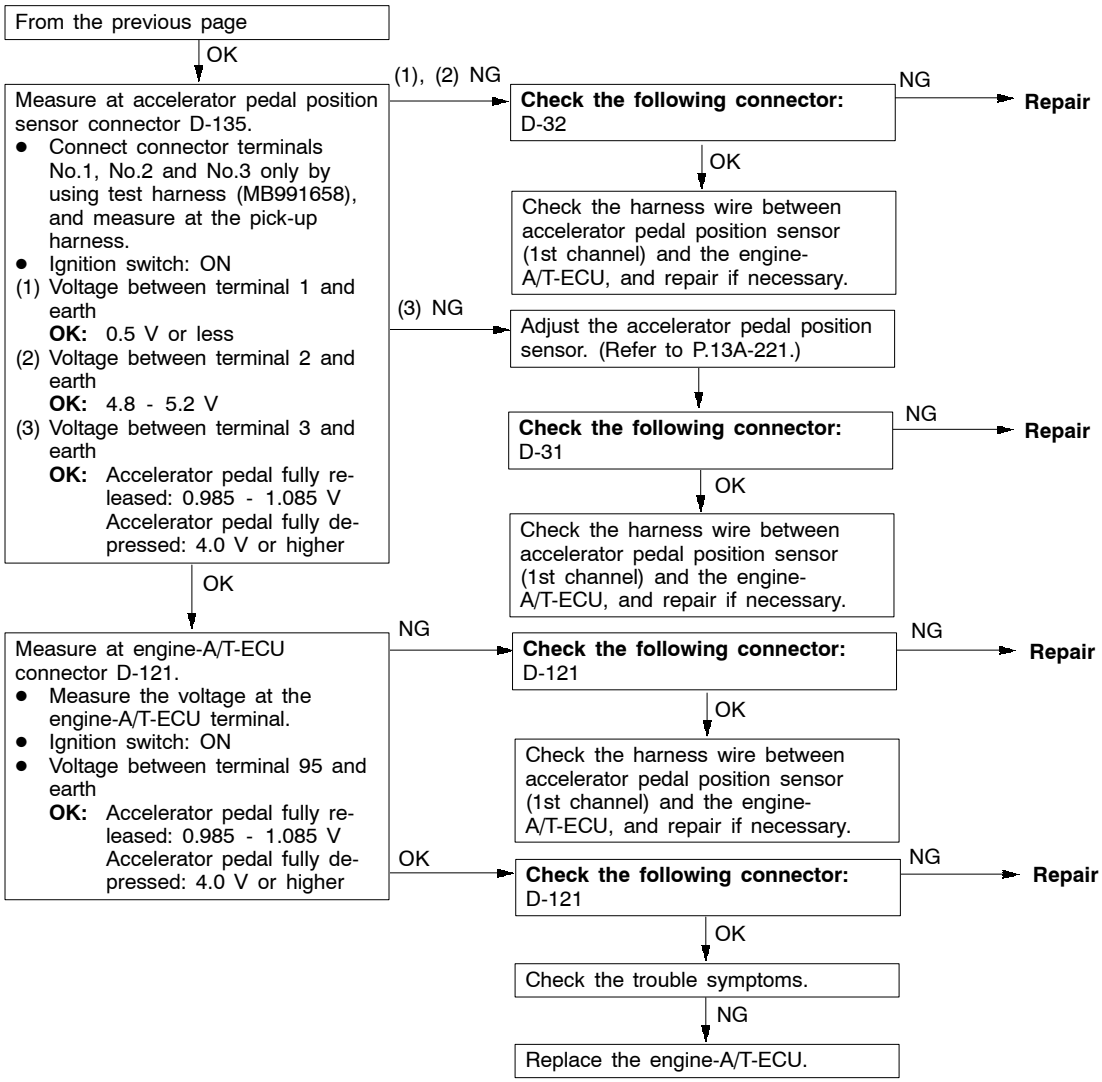


Purchased from www.WorkshopManuals.co.uk

www.WorkshopManuals.co.uk

| Code No.79 Throttle position sensor (1st channel) system | Probable cause |
|---|---|
| The throttle valve controller judges a malfunction, and then transmit the result to the engine-A/T-ECU.<br>Range of Check<br>● Ignition switch: ON<br>Set Conditions<br>● The sensor output voltage is 0.2 V or less.<br>or<br>● The sensor output voltage is 4.85 V or more and the throttle position sensor (2nd channel) output voltage is 2.5V or more.<br>or<br>● The throttle position sensor (1st channel) and throttle position sensor (2nd channel) combination output voltage is outside 4 - 6V.<br>or<br>● The opening angle of throttle position sensor (1st channel) is different from its target by 1V or more.<br>or<br>● The throttle position sensor (1st channel) output changes within 25 mV when the throttle valve control servo moves one step. | ● Malfunction of throttle position sensor<br>● Open or short circuit in the throttle position sensor (1st channel) circuit or loose connector contact<br>● Malfunction of throttle valve controller<br>● Malfunction of engine-A/T-ECU |

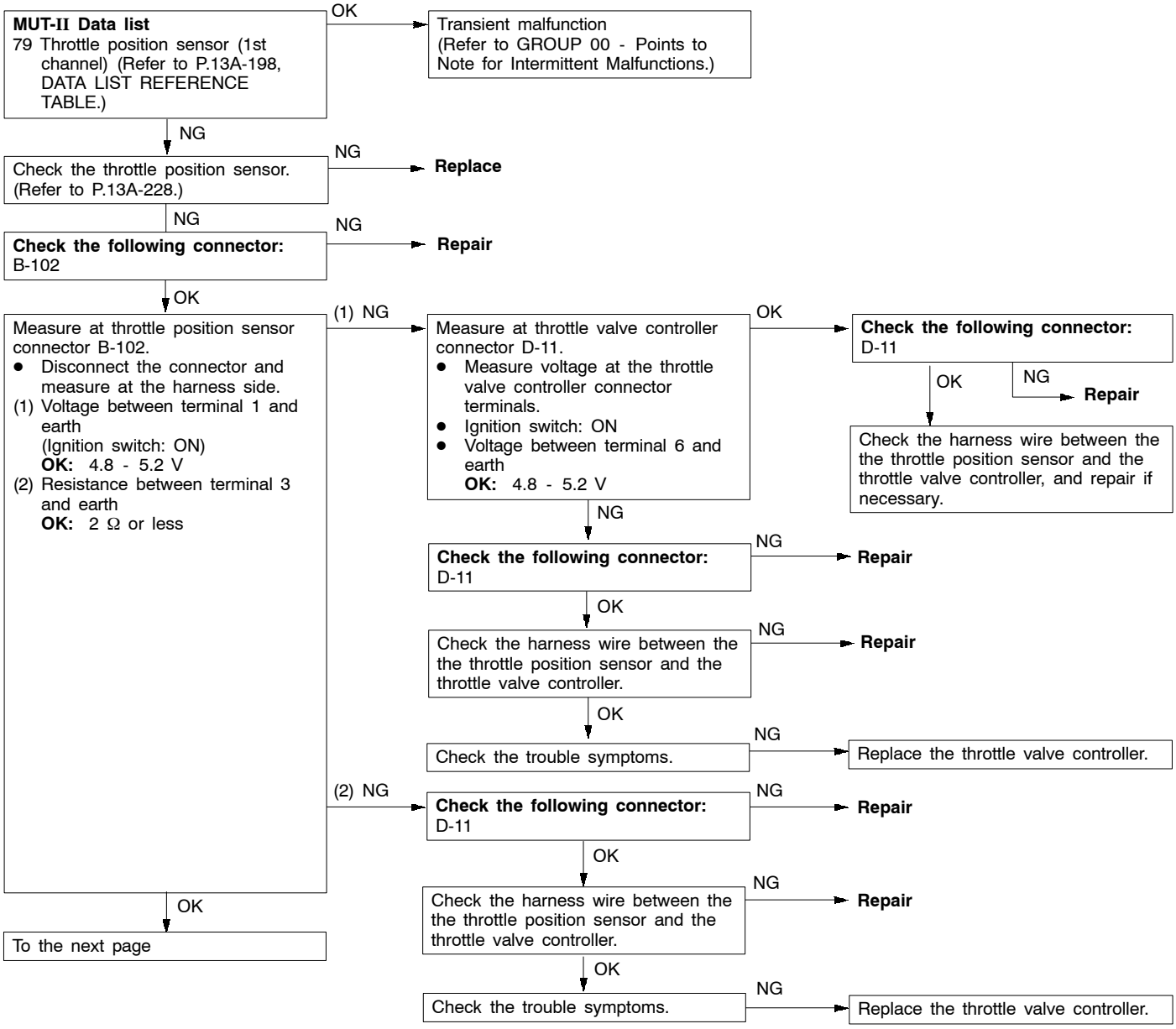


Purchased from www.WorkshopManuals.co.uk

www.WorkshopManuals.co.uk

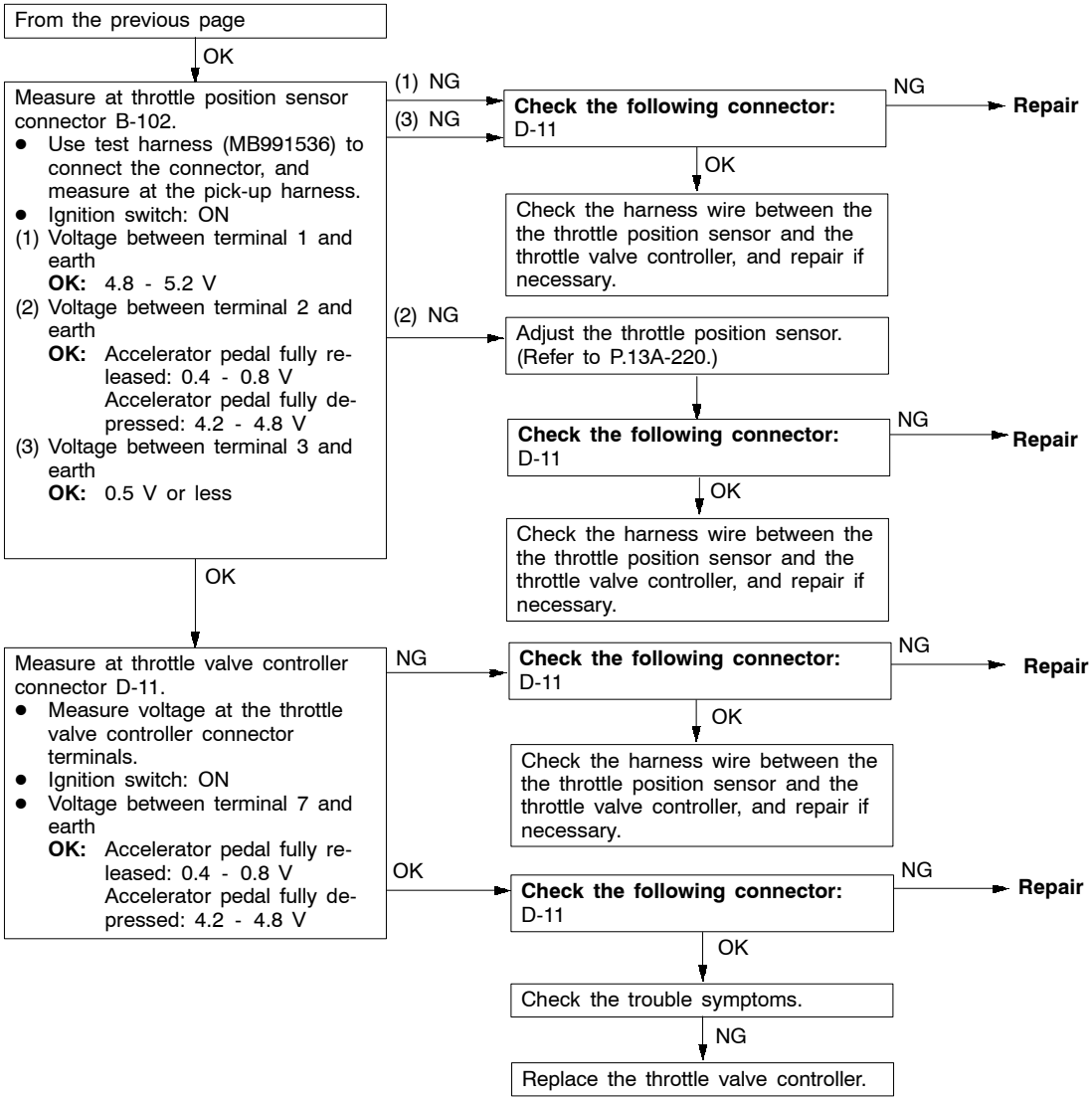


Purchased from www.WorkshopManuals.co.uk

www.WorkshopManuals.co.uk

| Code No.89 Abnormal fuel system | Probable cause |
|---|---|
| Range of Check<br>● Engine: Being learning the air-fuel ratio<br>Set Conditions<br>● Ten seconds or more have been passed while the fuel injection amount compensation value is too low.<br>or<br>● Ten seconds or more have been passed while the fuel injection amount compensation value is too high. | ● Malfunction of fuel supply system<br>● Malfunction of oxygen sensor<br>● Malfunction of intake air temperature sensor<br>● Malfunction of barometric pressure sensor<br>● Malfunction of air flow sensor<br>● Malfunction of engine-A/T-ECU |

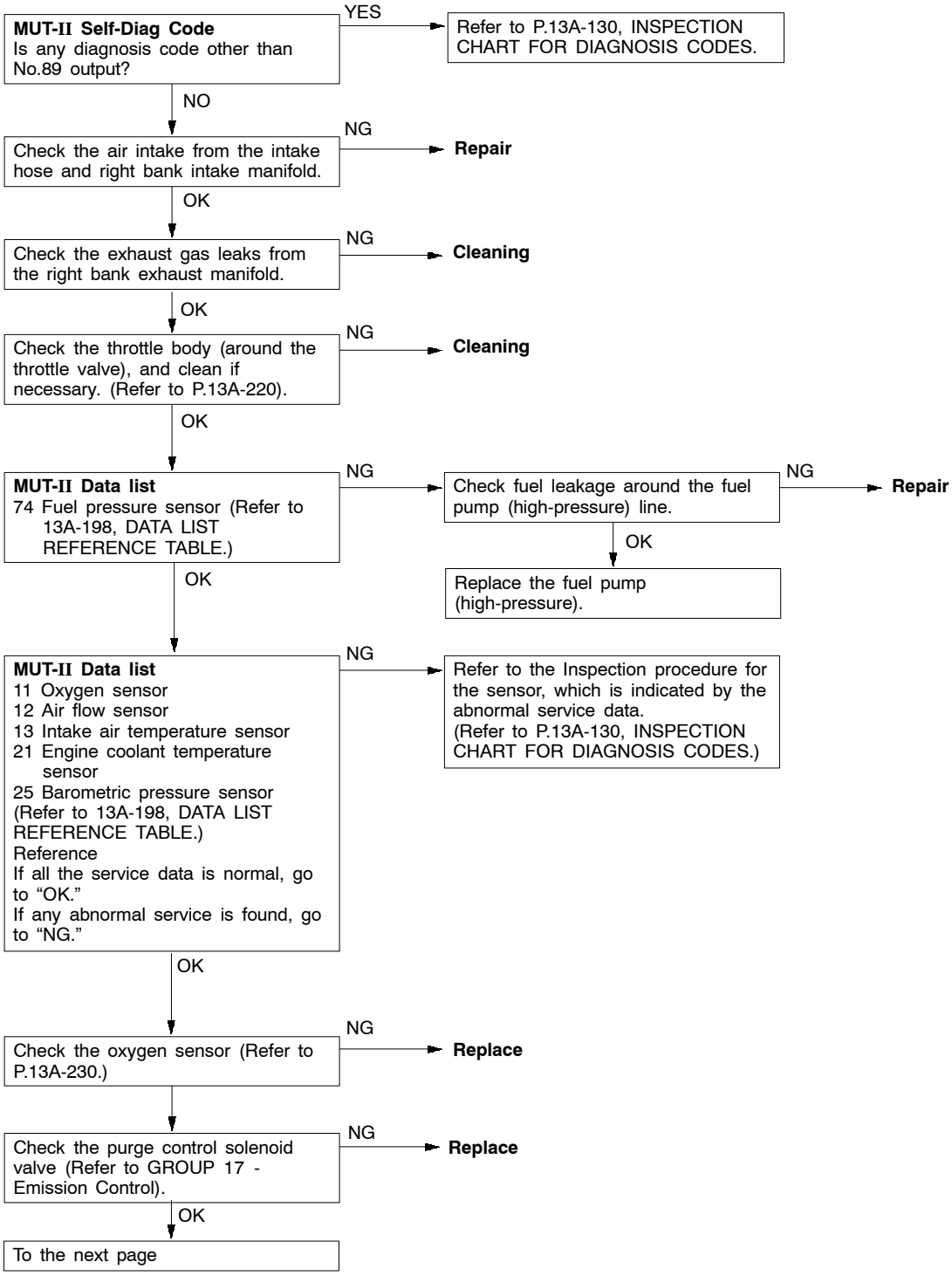


Purchased from www.WorkshopManuals.co.uk

www.WorkshopManuals.co.uk

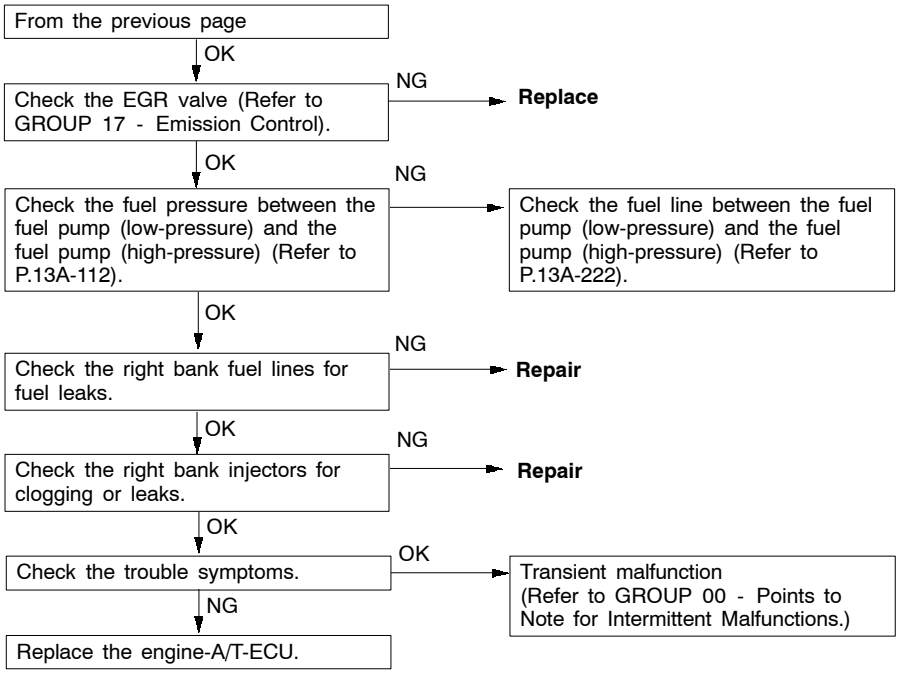


| Code No.91 Electronic-controlled throttle valve system | Probable cause |
|---|---|
| Range of Check<br>● Ignition switch: ON<br>● Error in communication between the engine-A/T-ECU and the throttle valve controller<br>Set Conditions<br>● Output voltage of throttle position sensor (2nd channel) fluctuates significantly (approx. 1 V or more) from an expected value, based on that of the accelerator pedal position sensor (2nd channel).<br>Range of Check<br>● Ignition switch: ON<br>● Error in communication between the throttle valve controller and the engine-A/T-ECU<br>Set Conditions<br>● The output voltage of the throttle position sensor (2nd channel) is significantly different (approx. 1 V) from the the throttle valve opening angle (voltage), which the engine-A/T-ECU request the throttle valve controller. | ● Short in communication line<br>● Malfunction of the engine-A/T-ECU<br>● Malfunction of the throttle valve controller |

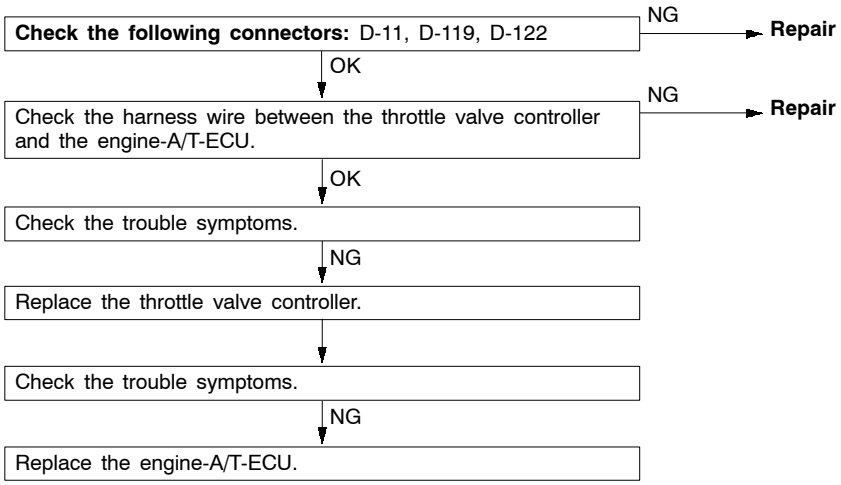


Purchased from www.WorkshopManuals.co.uk

www.WorkshopManuals.co.uk

| Code No.92 Throttle valve position feedback system | Probable cause |
|---|---|
| The throttle valve controller judges a malfunction, and then transmit the result to the engine-A/T-ECU.<br>Range of Check<br>● Ignition switch: ON<br>● Battery voltage: 10 V or more<br>Set Conditions<br>● Failure in the position feedback<br>[The engine-A/T-ECU detects that the current in the motor is excessive and the opening angle difference between the target value of throttle position sensor (1st channel) and the actual value of throttle position sensor (1st channel) is 2.0V or more] | ● Malfunction of throttle position sensor (1st channel)<br>● Open or short circuit in the throttle position sensor (1st channel) circuit or loose connector contact<br>● Malfunction of the throttle valve controller |

**MUT-II Self-Diag Code**
Is code No.79 set?
- YES → Refer to Code No.79, Throttle position sensor (1st channel) system. (Refer to P.13A-158.)
- NO ↓

**MUT-II Self-Diag Code**
Is Code No.93 set?
- YES → Refer to Code No.93, Throttle valve control servo system (Refer to P.13A-163.)
- NO ↓

Adjust the throttle position sensor. (Refer to P.13A-220.)
- OK ↓

Check the throttle valve control servo. (Refer to 13A-232.)
- NG → Replace the throttle body assembly.
- OK ↓

**Check the following connectors:** B-102, B-122, D-11
- NG → **Repair**
- NG ↓

Check the harness wires between the throttle position sensor and the throttle valve controller, and between the throttle valve control servo and the throttle valve controller.
- NG → **Repair**
- OK ↓

Check the trouble symptoms.
- NG ↓

Replace the throttle valve controller.

Purchased from www.WorkshopManuals.co.uk

www.WorkshopManuals.co.uk

| Code No.93 Throttle valve control servo system | Probable cause |
|---|---|
| The throttle valve controller judges a malfunction, and then transmit the result to the engine-A/T-ECU.<br>Range of Check<br>● Throttle valve control servo relay: ON<br>Set Conditions<br>● Short circuit of the throttle valve control servo drive circuit to earth<br>● Power is supplied to the throttle valve control servo circuit from other sources.<br>● Open circuit in the throttle valve control servo power supply circuit | ● Malfunction of the throttle valve control servo<br>● Open circuit in the throttle valve control servo power supply circuit<br>● Open or short circuit in the throttle valve control servo circuit or loose connector contact<br>● Malfunction of throttle valve controller |

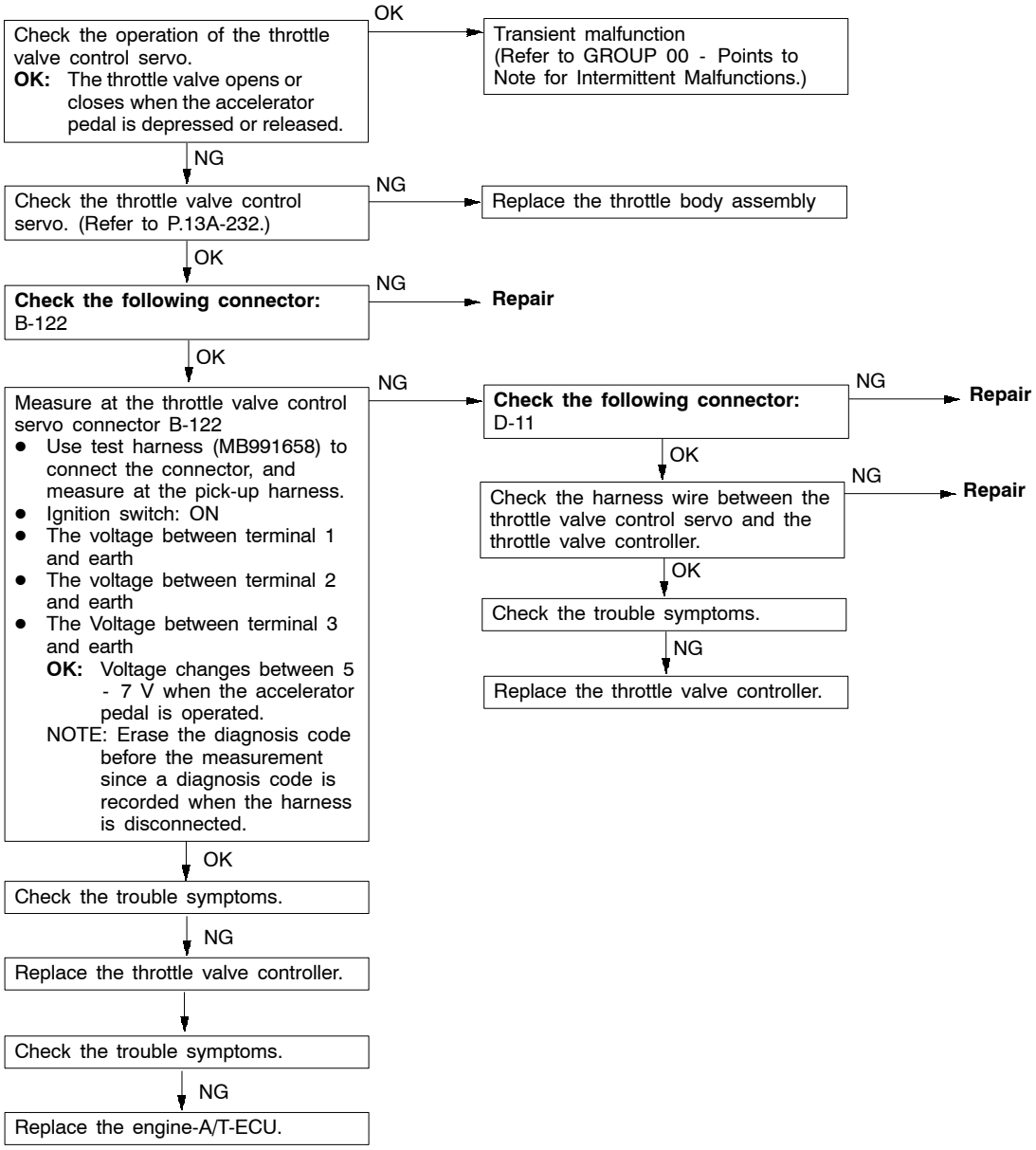


Purchased from www.WorkshopManuals.co.uk

www.WorkshopManuals.co.uk

| Code No.94 Communication line system with the throttle valve controller | Probable cause |
|---|---|
| Range of Check<br>● Ignition switch: ON<br>● Battery voltage: 8 V or more.<br>● Engine: not cranking<br>Set Conditions<br>● System detects an error in communication line between the engine-A/T-ECU and the throttle valve controller, and between the throttle valve controller and the engine-A/T-ECU. | ● Short in communication line<br>● Malfunction of engine-A/T-ECU<br>● Malfunction of throttle valve controller |

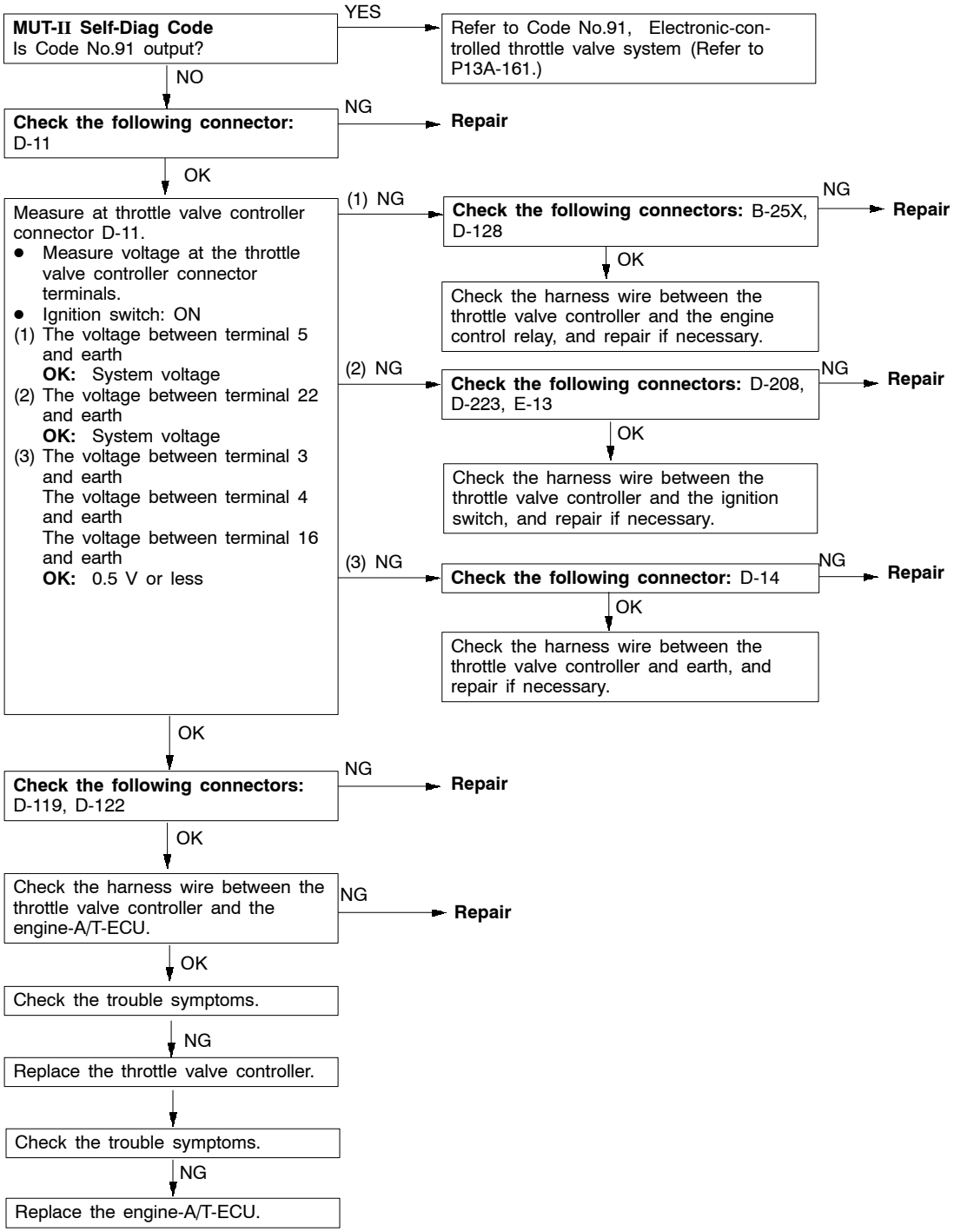


Purchased from www.WorkshopManuals.co.uk

www.WorkshopManuals.co.uk

| Code No.96 Throttle valve controller system | Probable cause |
|---|---|
| Set Conditions<br>● Errors in reading or writing to the throttle valve controller ROM. | ● Malfunction of the throttle valve controller |

Replace the throttle valve controller.

Purchased from www.WorkshopManuals.co.uk

www.WorkshopManuals.co.uk

## INSPECTION CHART FOR TROUBLE SYMPTOMS

| Trouble symptom | | Inspection procedure No. | Reference page |
|---|---|---|---|
| Communication with MUT-II is impossible. | Communication with all systems is not possible. | 1 | 13A-169 |
| | Communication with engine-A/T-ECU only is not possible. | 2 | 13A-169 |
| Engine warning lamp and related parts | The engine warning lamp does not illuminate right after the ignition switch is turned to the ON position. | 3 | 13A-170 |
| | The engine warning lamp remains illuminating and never goes out. | 4 | 13A-170 |
| Starting | No initial combustion (starting impossible) | 5 | 13A-171 |
| | Initial combustion but no complete combustion (starting impossible) | 6 | 13A-172 |
| | Long time to start (improper starting) | | |
| Idling stability (Improper idling) | Unstable idling (Rough idling, hunting) | 7 | 13A-174 |
| | Idling speed is high. (Improper idling speed) | 8 | 13A-176 |
| | Idling speed is low. (Improper idling speed) | | |
| Idling stability (Engine stalls) | When the engine is cold, it stalls at idling. (Die out) | 9 | 13A-177 |
| | When the engine is hot, it stalls at idling. (Die out) | 10 | 13A-178 |
| | The engine stalls when starting the car. (Pass out) | 11 | 13A-180 |
| | The engine stalls when decelerating. | 12 | 13A-181 |
| Driving | Hesitation, sag or stumble | 13 | 13A-182 |
| | Poor acceleration | | |
| | Surge | | |
| | The feeling of impact or vibration when accelerating | 14 | 13A-183 |
| | The feeling of impact or vibration when decelerating | 15 | 13A-184 |
| | Knocking | 16 | 13A-184 |
| Dieseling | | 17 | 13A-184 |
| Too high CO and HC concentration when idling | | 18 | 13A-185 |
| Low alternator output voltage (approx. 12.3 V) | | 19 | 13A-186 |
| Engine idle speed is incorrect while the A/C is on (A/C switch 2 signal). | | 20 | 13A-187 |
| Fans (radiator fan, A/C condenser fan) are inoperative | | 21 | 13A-187 |
| GDI ECO indicator lamp system | GDI ECO indicator lamp does not illuminate. | 22 | 13A-188 |
| | GDI ECO indicator lamp remains illuminated and does not go off. | 23 | 13A-188 |

Purchased from www.WorkshopManuals.co.uk

www.WorkshopManuals.co.uk

## PROBLEM SYMPTOMS TABLE (FOR YOUR INFORMATION)

| Items | | Symptom |
|---|---|---|
| Starting | Won't start | The starter is used to crank the engine, but there is no combustion within the cylinders, and the engine won't start. |
| | Fires up and dies | There is combustion within the cylinders, but then the engine soon stalls. |
| | Hard starting | Engine starts after cranking a while. |
| Idling stability | Hunting | Engine speed doesn't remain constant; changes at idle. |
| | Rough idle | Usually, a judgement can be based upon the movement of the tachometer pointer, and the vibration transmitted to the steering wheel, shift lever, body, etc. This is called rough idle. |
| | Incorrect idle speed | The engine doesn't idle at the usual correct speed. |
| | Engine stall (Die out) | The engine stalls when the foot is taken from the accelerator pedal, regardless of whether the vehicles is moving or not. |
| | Engine stall (Pass out) | The engine stalls when the accelerator pedal is depressed or while it is being used. |
| Driving | Hesitation, Sag | "Hesitation" is the delay in response of the vehicle speed (engine speed) that occurs when the accelerator is depressed in order to accelerate from the speed at which the vehicle is now traveling, or a temporary drop in vehicle speed (engine speed) during such acceleration.<br>Serious hesitation is called "sag".<br> 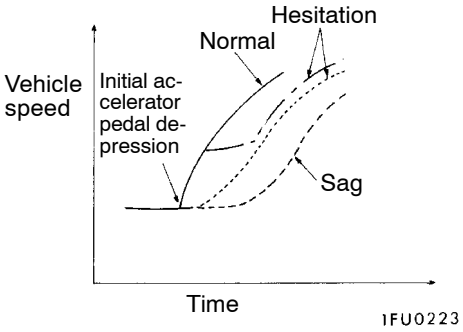 |
| | Poor acceleration | Poor acceleration is inability to obtain an acceleration corresponding to the degree of throttle opening, even though acceleration is smooth, or the inability to reach maximum speed. |
| | Stumble | Engine speed increase is delayed when the accelerator pedal is initially depressed for acceleration.<br> 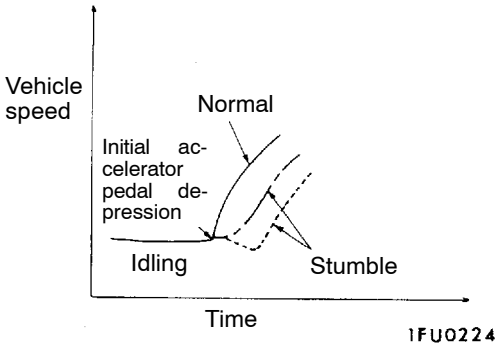 |

Purchased from www.WorkshopManuals.co.uk

www.WorkshopManuals.co.uk

| Items | | Symptom |
|---|---|---|
| Driving | Shock | The feeling of a comparatively large impact or vibration when the engine is accelerated or decelerated. |
| | Surge | This is repeated surging ahead during constant speed travel or during variable speed travel. |
| | Knocking | A sharp sound like a hammer striking the cylinder walls during driving and which adversely affects driving. |
| Stopping | Run on (“Dieseling”) | The condition in which the engine continues to run after the ignition switch is turned to OFF. Also called “Dieseling”. |

Purchased from www.WorkshopManuals.co.uk

www.WorkshopManuals.co.uk

# INSPECTION PROCEDURE FOR TROUBLE SYMPTOMS

## Inspection procedure 1

| Communication with all systems is not possible. | Probable cause |
|---|---|
| The cause is probably a defect in the power supply system (including earth) for the diagnosis line. | • Malfunction of the diagnosis connector<br>• Open circuit or short-circuited between engine-A/T-ECU and diagnosis connector circuit<br>• Malfunction of the MUT-II |

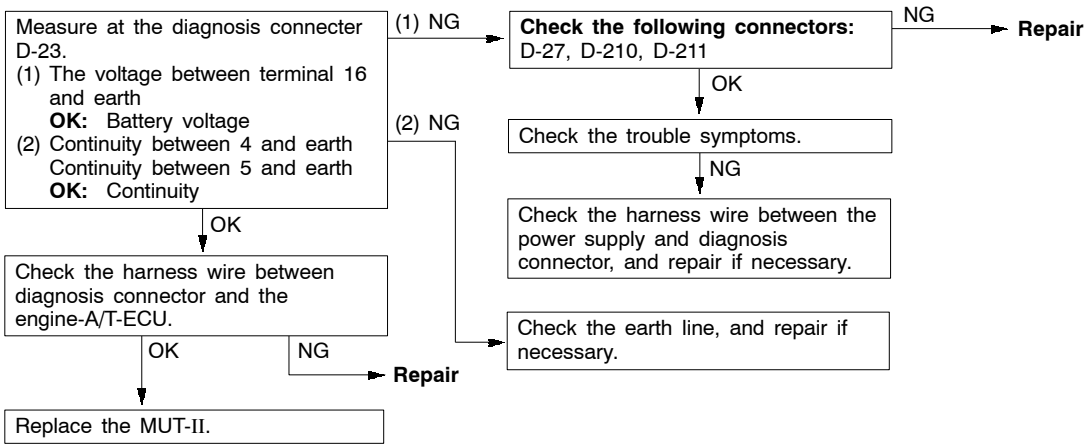


## Inspection procedure 2

| Communication with engine-A/T-ECU is not possible. | Probable cause |
|---|---|
| The cause is probably a defect in the engine-A/T-ECU power supply circuit (including earth). | • Open circuit or short-circuited harness wire in the engine-A/T-ECU power supply circuit.<br>• Open circuit between engine-A/T-ECU and diagnosis connector<br>• Malfunction of the engine-A/T-ECU |

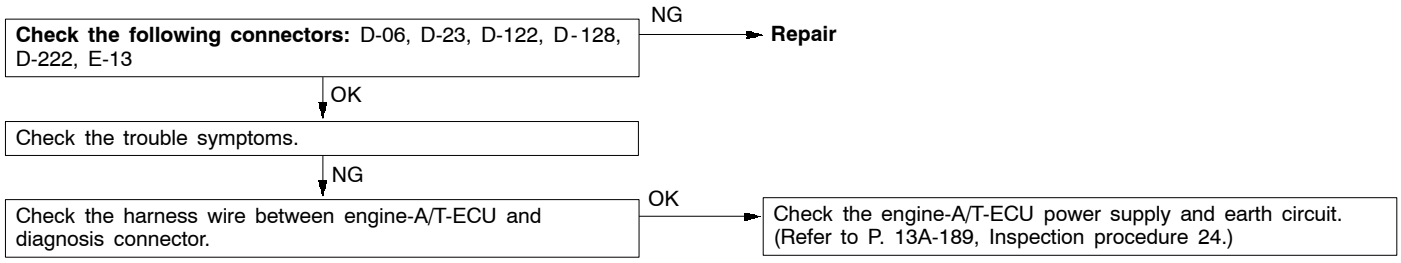


NOTE
On vehicles with multi communication system (MMCS) or RV meter, if a malfunction cannot be resolved after the procedure above, check the multi center display unit or RV meter and replace if necessary. (Refer to GROUP 54 - Clock, multi center display and RV meter.)

Purchased from www.WorkshopManuals.co.uk

www.WorkshopManuals.co.uk

## Inspection procedure 3

| The engine warning lamp does not illuminate right after the ignition switch is turned to the ON position. | Probable cause |
|---|---|
| Because there is a burnt-out bulb, the engine-A/T-ECU causes the engine warning lamp to illuminate for five seconds immediately after the ignition switch is turned to ON.<br>If the engine warning lamp does not illuminate immediately after the ignition switch is turned to ON, one of the malfunction listed at right has probably occurred. | • Burnt-out bulb<br>• Open circuit or short-circuit between the engine warning lamp and engine-A/T-ECU.<br>• Malfunction of the engine-A/T-ECU |

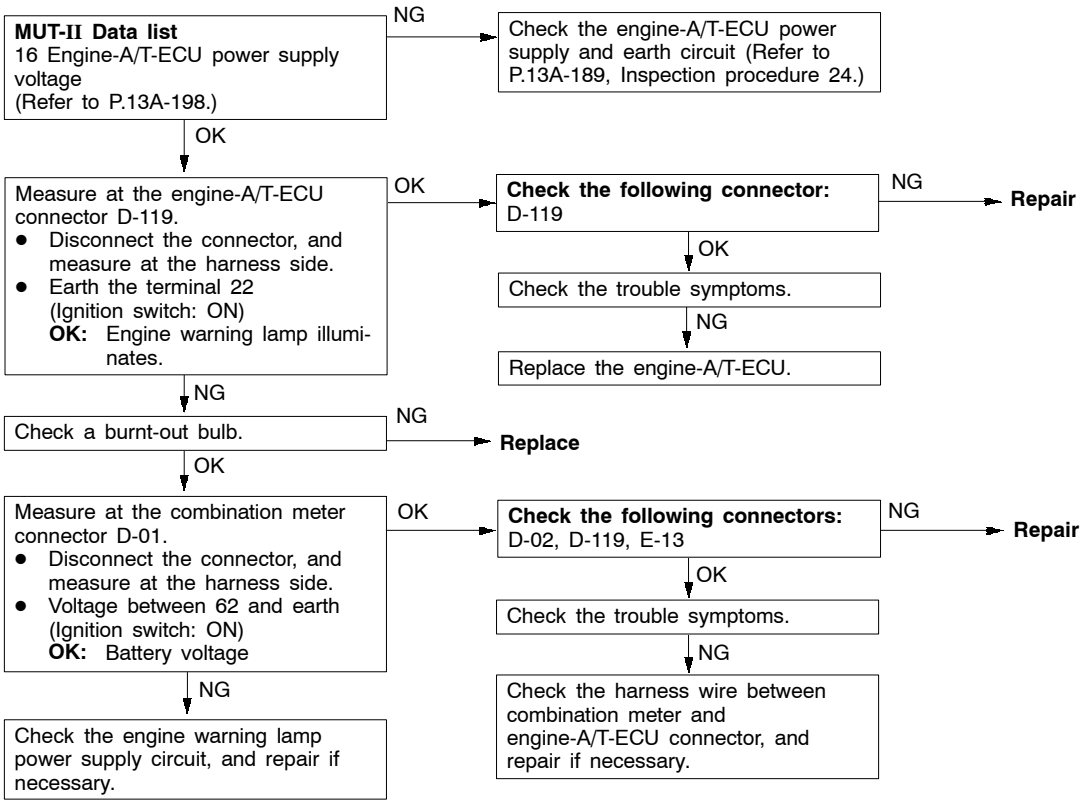


## Inspection procedure 4

| The engine warning lamp remains illuminating and never goes out. | Probable cause |
|---|---|
| In cases such as the above, the cause is probably that the engine-A/T-ECU is detecting a problem in a sensor or actuator, or that one of the malfunctions listed at right has occurred. | • Short-circuit between the engine warning lamp and engine-A/T-ECU<br>• Malfunction of the engine-A/T-ECU |

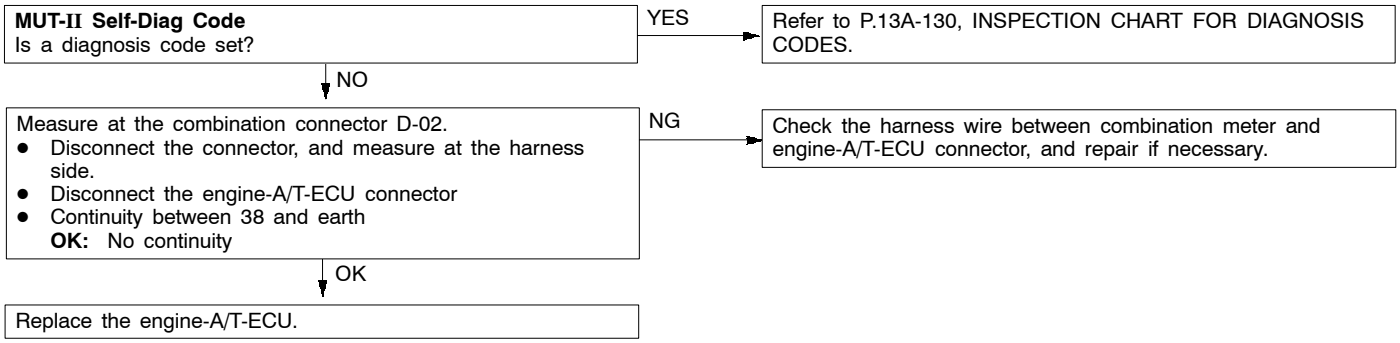


Purchased from www.WorkshopManuals.co.uk

www.WorkshopManuals.co.uk

## Inspection procedure 5

| No initial combustion (starting impossible) | Probable cause |
|---|---|
| In cases such as the above, the cause is probably that a spark plug is defective, or that the supply of fuel to the combustion chamber is defective. In addition, foreign materials (water, kerosene, etc.) may be mixed with the fuel. | • Malfunction of the fuel supply system<br>• Malfunction of the ignition system<br>• Malfunction of the engine-A/T-ECU |

Check battery voltage when cranking.
**OK:** 8 V or higher
- NG → Check the battery.
- OK ↓

**MUT-II Self-Diag Code**
Is a diagnosis code set?
- YES → Refer to P.13A-130, INSPECTION CHART FOR DIAGNOSIS CODES
- NO ↓

**MUT-II Data list**
16 Battery voltage (Refer to P.13A-198.)
- NG → Check the engine control relay and ignition switch-IG system (Refer to P.13A-190, Inspection procedure 25.)
- OK ↓

Does the camshaft rotate when the engine is cranking?
- NO → Check if the timing belt is broken or damaged.
- YES ↓

**MUT-II Actuator Test**
07 Fuel pump (low pressure) (Refer to P.13A-203.)
- NG → Check fuel pump (low pressure) system (Refer to P.13A-193, Inspection procedure 29.)
- OK ↓

**MUT-II Data list**
22 Crank angle sensor (Refer to P.13A-198.)
- NG → Check the crank angle sensor system. (Refer to P.13A-140, code No.22.)
- OK ↓

**MUT-II Data list**
21 Engine coolant temperature sensor (Refer to P.13A-198.)
- NG → Check the engine coolant temperature sensor system (Refer to P.13A-138, code No.21.)
- OK ↓

**MUT-II Data list**
79 Throttle position sensor (1st channel) (Refer to P.13A-198.)
- NG → Check the throttle position sensor (1st channel) system (Refer to P.13A-158, code No.79.)
- OK ↓

Is starting good if the engine is cranked with the accelerator pedal slightly depressed?
- YES →
  - Clean the throttle valve area. (Refer to P.13A-220.)
  - Check and adjust the throttle position sensor (Refer to P.13A-220.)
- NO ↓

Adjust the throttle position sensor (Refer to P.13A-220.)
- NG ↓

Measure at injector driver connector B-19
- Disconnect the connector, and measure at the harness side.
- The voltage between terminals 4, 12, 21 and earth (Ignition switch: ON)

**OK** Battery voltage
- NG → Check the injector driver system. (Refer to P.13A-196, Inspection procedure 34.)
- OK ↓

Check fuel leakage (Refer to P.13A-225.)
- NG → **Repair**
- OK ↓

Measure low fuel pressure between the fuel pump (low pressure) and fuel pump (high pressure) (Refer to P.13A-222.)
- NG → **Repair**
- OK ↓

To the next page

Purchased from www.WorkshopManuals.co.uk

www.WorkshopManuals.co.uk

From the previous page

OK

Clamp the leads of the ignition coil No.1 terminal with a timing light pick-up in order. Does the timing light flash when the engine is cranked?

NO → Check the ignition coil (built-in power transistor) system (Refer to P.13A-148, code No.44.)

YES

Check the ignition timing when cranking.
**OK:** approx. 5 °BTDC

NG → Check that the crank angle sensor and timing belt cover are properly installed.

OK

Check ignition coil spark for each cylinder.
1. Remove the ignition coil.
2. Install a new spark plug to the removed ignition coil.
3. Disconnect the injector intermediate connector.

**Caution**
**Never touch the connector terminal as approx. 100 V is applied to the injector, or you are seriously injured.**

4. Earth the spark plug electrode securely.
5. Check that the spark plug ignites when the engine is cranked.

NG → Replace the ignition coil.

OK

Check the following items in that order.
- Check the spark plug
- Check the compression pressure
- Check if foreign materials (water, alcohol, etc.) got into fuel.

OK

Check the trouble symptoms.

NG

Replace the injector.

## Inspection procedure 6

| Initial combustion but no complete combustion (starting impossible), long time to start (hard starting) | Probable cause |
|---|---|
| In such cases as the above, the cause is probably that the spark plugs are generating sparks by the spark are weak, or the initial mixture is not appropriate. | • Malfunction of fuel supply system<br>• Malfunction of of fuel pressure control solenoid valve<br>• Malfunction of the ignition system<br>• Malfunction of the electronic-controlled throttle valve system<br>• Malfunction of the engine-A/T-ECU |

Check the battery voltage when cranking.
**OK:** 8 V or higher

NG → Check the battery.

OK

**MUT-II Self-Diag Code**
Is a diagnosis code set?

YES → Refer to P.13A-130, INSPECTION CHART FOR DIAGNOSIS CODES.

NO

**MUT-II Actuator Test**
07 Fuel pump (low pressure) (Refer to P.13A-203.)

NG → Check fuel pump system (low-pressure) (Refer to P.13A-193, Inspection procedure 29.)

OK

**MUT-II Data list**
21 Engine coolant temperature sensor (Refer to P.13A-198.)

NG → Check the engine coolant temperature sensor system (Refer to P.13A-138, code No.21.)

OK

To the next page

Purchased from www.WorkshopManuals.co.uk

www.WorkshopManuals.co.uk

From the previous page

OK ↓

**MUT-II Data list**
18 Cranking signal (Refer to P.13A-198.)

NG → Check the ignition switch-ST system and inhibitor switch (Refer to 13A-191, Inspection procedure 27.)

OK ↓

**MUT-II Actuator Test**
74 Fuel pressure sensor (Refer to P.13A-203.)

NG → Check abnormal fuel pressure. (Refer to P.13A-151, code No.56.)

OK ↓

Check fuel leakage. (Refer to P.13A-225.)

NG → **Repair**

OK ↓

**MUT-II Data list**
79 Throttle position sensor (1st channel) (Refer to P.13A-198.)

NG → Check the throttle valve position feedback system. (Refer to P.13A-162, code No.92.)

OK ↓

Is starting good if the engine is cranked with the accelerator pedal slightly depressed?

YES →
- Clean the throttle valve area. (Refer to P.13A-220)
- Adjust the throttle position sensor (Refer to P.13A-220.)

NO ↓

Adjust the throttle position sensor (Refer to P.13A-220.)

↓

Check the ignition timing when cranking.
**OK:** Approx. 5 °BTDC

NG → Check that the crank angle sensor and timing belt cover are installed properly.

OK ↓

Check ignition coil spark for each cylinder.
1. Remove the ignition coil.
2. Install a new spark plug to the removed ignition coil.

**Caution**
**Never touch the connector terminal as approx. 100 V is applied to the injector, or you are seriously injured.**

3. Disconnect the injector intermediate connector.
4. Earth the spark plug electrode securely.
5. Check that the spark plug ignites when the engine is cranked.

NG → Replace the ignition coil.

OK ↓

Check the following items in that order.
- Check the spark plug
- Check the compression pressure
- Check the fuel lines for clogging.
- Check if foreign materials (water, alcohol, etc.) got into fuel.

↓

Check the trouble symptoms.

NG → Replace the injector.

Purchased from www.WorkshopManuals.co.uk

www.WorkshopManuals.co.uk

## Inspection procedure 7

| Unstable idling (Rough idling, hunting) | Probable cause |
|---|---|
| The cause is probably a malfunction of the ignition system, air/fuel ratio control system, electronic controlled throttle valve system, compression pressure, etc. As many causes can be suspected, diagnose from easier items. | • Malfunction of the ignition system<br>• Malfunction of the air/fuel ratio control system<br>• Malfunction of the electronic-controlled throttle valve system<br>• Poor compression<br>• Air sucking into the air intake system |

Has the battery been disconnected recently?
- YES → After warming-up, let the engine run at idling for 10 minutes.
- NO ↓

**MUT-II Self-Diag Code**
Is a diagnosis code set?
- YES → Refer to P.13A-130, INSPECTION CHART FOR DIAGNOSIS CODES.
- NO ↓

**MUT-II Data list**
79 Throttle position sensor (1st channel) (Refer to P.13A-198.)
- NG → Check the throttle valve position feedback system (Refer to P.13A-162, code No.92.)
- OK ↓

Does the idling speed fluctuate excessively?
- YES →
  - Clean around the throttle valve. (Refer to P.13A-220)
  - Adjust the throttle position sensor (Refer to P.13A-220.)
- NO ↓

**MUT-II Data list**
26 Accelerator pedal position switch (Refer to P.13A-198.)
- NG → Check the accelerator pedal position switch system (Refer to P.13A-192, Inspection procedure 28.)
- OK ↓

**MUT-II Data list**
13 Intake air temperature sensor (Refer to P.13A-198.)
- NG → Check the intake air temperature sensor system (Refer to P.13A-135, code No.13.)
- OK ↓

**MUT-II Data list**
25 Barometric pressure sensor (Refer to P.13A-198.)
- NG → Check the barometric pressure sensor system (Refer to P.13A-145, code No.25.)
- OK ↓

**MUT-II Data list**
21 Engine coolant temperature sensor (Refer to P.13A-198.)
- NG → Check the engine coolant temperature sensor system (Refer to P.13A-138, code No.21.)
- OK ↓

**MUT-II Actuator Test**
08 Purge control solenoid valve (Refer to P.13A-203.)
- NG → Check the purge control solenoid valve system (Refer to P.13A-197, Inspection procedure 36.)
- OK ↓

**MUT-II Data list**
11 Oxygen sensor (Refer to P.13A-198.)
**OK:** 600 - 1,000 mV when the engine is suddenly raced
- NG → 11 Oxygen sensor system check (Refer to P. 13A-131, code No.11.)
- OK ↓

**MUT-II Data list**
11 Oxygen sensor (Refer to P.13A-198.)
**OK:** 0 - 400 mV and 600 - 1,000 mV alternates when the engine is idling (wait for 2 minutes after the engine is started).
- NG → Measure fuel high-pressure between the fuel pump (high pressure) and injector. (Refer to P.13A-222.)
  - OK ↓ Check that air is sucked in the air intake system.
    - Broken intake manifold gasket
    - Damaged vacuum hose
    - Damaged air intake hose
- OK ↓

To the next page

Purchased from www.WorkshopManuals.co.uk

www.WorkshopManuals.co.uk

From the previous page

OK

**MUT-II Data list**
27 Power steering oil pressure switch (Refer to P.13A-198.)

NG → Check the power steering oil pressure switch system (Refer to P.13A-194, Inspection procedure 30.)

OK

**MUT-II Data list**
28 A/C switch (Refer to P.13A-198.)

NG → Check the A/C switch and A/C relay system (Refer to P.13A-194, Inspection procedure 31.)

OK

**MUT-II Data list**
67 Stop lamp switch (Refer to P.13A-198.)

NG → Check the stop lamp switch system (Refer to P.13A-195, Inspection procedure 32.)

OK

**MUT-II Data list**
31 Small lamp switch (Refer to P.13A-198.)

NG → Check the small lamp switch system (Refer to P.13A-195, Inspection procedure 33.)

OK

**MUT-II Data list**
14 Throttle position sensor (2nd channel)
After warming-up, let the engine run at idling with no load.
**OK:** When idling, 3,900 - 4,800 mV

NG →
- Clean around the throttle valve. (Refer to P.13A-220)
- Adjust the throttle position sensor (Refer to P.13A-220.)

OK

**MUT-II Data list**
68 EGR valve (Refer to P.13A-198.)

NG → Check the EGR valve system (Refer to P.13A-196, Inspection procedure 35.)

OK

Check the ignition timing. (Refer to GROUP 11A - Engine Adjustment.)

NG → Check that the crank angle sensor and timing belt cover are properly installed.

OK

Clean around the throttle valve. (Refer to P.13A-220.)

OK

Check ignition coil spark for each cylinder.
1. Remove the ignition coil.
2. Install a new spark plug to the removed ignition coil.
3. Disconnect the injector intermediate connector.

**Caution**
**Never touch the connector terminal as approx. 100 V is applied to the injector, or you are seriously injured.**

4. Earth the spark plug electrode securely.
5. Check that the spark plug ignites when the engine is cranked.

NG → Replace the ignition coil.

OK

Check the following items in that order.
- Check the spark plug
- Check the exhaust gas emission control system
- Check the EGR control system
- Check the compression pressure
- Check if foreign materials (water, kerosine,etc.) got into fuel.

→ Check the trouble symptoms.

NG →
Air is sucked in the air intake system, or EGR gas leaks.
- Broken intake manifold gasket
- Damaged air intake hose
- Damaged vacuum hose
- Faulty EGR valve seat

Purchased from www.WorkshopManuals.co.uk

www.WorkshopManuals.co.uk

## Inspection procedure 8

| Idling speed is high or low (Improper idling speed) | Probable cause |
|---|---|
| The cause is probably that the intake air amount during idling is too great or too small. | • Malfunction of the electronic-controlled throttle valve system<br>• Malfunction of the throttle body |

**MUT-II Self-Diag Code**
Is a diagnosis code set?
- YES → Refer to P.13A-130, INSPECTION CHART FOR DIAGNOSIS CODES.
- NO ↓

**MUT-II Data list**
79 Throttle position sensor (1st channel) (Refer to P.13A-198.)
- NG → Check the throttle valve position feedback system (Refer to P.13A-162, code No.92.)
- OK ↓

**MUT-II Actuator Test**
08 Purge control solenoid valve (Refer to P.13A-203.)
- NG → Check the purge control solenoid valve system (Refer to P.13A-197, Inspection procedure 36.)
- OK ↓

**MUT-II Data list**
26 Accelerator pedal position switch (Refer to P.13A-198.)
- NG → Check the accelerator pedal position switch system (Refer to P.13A-192, Inspection procedure 28.)
- OK ↓

**MUT-II Data list**
21 Engine coolant temperature sensor (Refer to P.13A-198.)
- NG → Check the engine coolant temperature sensor system (Refer to P.13A-138, code No.21.)
- OK ↓

**MUT-II Data list**
28 A/C switch (Refer to P.13A-198.)
- NG → Check the A/C switch and A/C relay system (Refer to P.13A-194, Inspection procedure 31.)
- OK ↓

**MUT-II Data list**
67 Stop lamp switch (Refer to P.13A-198.)
- NG → Check the stop lamp switch system (Refer to P.13A-195, Inspection procedure 32.)
- OK ↓

- Clean around the throttle valve. (Refer to P.13A-220.)
- Adjust the throttle position sensor (Refer to P.13A-220.)

Purchased from www.WorkshopManuals.co.uk

www.WorkshopManuals.co.uk

## Inspection procedure 9

| When the engine is cold, it stalls at idling. (Die out) | Probable cause |
|---|---|
| In such cases as the above, the cause is probably that the air/fuel mixture is inappropriate when the engine is cold, or that the intake air volume is insufficient. | • Malfunction of the electronic-controlled throttle valve system<br>• Malfunction of the throttle body |

Has the battery been disconnected recently?
- YES → After warming-up, let the engine run at idling for 10 minutes.
- NO ↓

**MUT-II Self-Diag Code**
Is a diagnosis code set?
- YES → Refer to P.13A-130, INSPECTION CHART FOR DIAGNOSIS CODES.
- NO ↓

Is engine-idling stable after the warming-up?
- YES → Check the unstable idling (rough, hunting). (Refer to P.13A-174, Inspection procedure 7.)
- NO ↓

**MUT-II Data list**
14 Throttle position sensor (2nd channel) (Refer to P.13A-198.)
- NG → Check the throttle valve position feedback system. (Refer to P.13A-162, code No.92.)
- OK ↓

**MUT-II Data list**
26 Accelerator pedal position switch (Refer to P.13A-198.)
- NG → Check the accelerator pedal position switch system. (Refer to P.13A-192, Inspection procedure 28.)
- OK ↓

**MUT-II Data list**
21 Engine coolant temperature sensor (Refer to P.13A-198.)
- NG → Check the engine coolant temperature sensor system. (Refer to P.13A-138, code No.21.)
- OK ↓

**MUT-II Data list**
68 EGR valve (Refer to P.13A-198.)
- NG → Check the EGR valve system. (Refer to P.13A-196, Inspection procedure 35.)
- OK ↓

Does the engine stall right after the accelerator pedal is released?
- YES →
  - Clean around the throttle valve. (Refer to P.13A-220.)
  - Adjust the throttle position sensor. (Refer to P.13A-220.)
- NO ↓

Measure fuel high-pressure between the fuel pump (high pressure) and injector. (Refer to P.13A-222.)
- OK ↓

Check the ignition timing. (Refer to GROUP 11A - Engine Adjustment.)
- NG → Check that the crank angle sensor and timing belt cover are properly installed.
- OK ↓

Check ignition coil spark for each cylinder.
1. Remove the ignition coil.
2. Install a new spark plug to the removed ignition coil.
3. Disconnect the injector intermediate connector.

**Caution**
**Never touch the connector terminal as approx. 100 V is applied to the injector, or you are seriously injured.**

4. Earth the spark plug electrode securely.
5. Check that the spark plug ignites when the engine is cranked.

- NG → Replace the ignition coil.
- OK → Check the following items in that order.
  - Check the spark plug
  - Check the compression pressure
  - Check the engine oil viscosity.

  ↓

  Check the trouble symptoms.
  - NG → Replace the injector.

Purchased from www.WorkshopManuals.co.uk

www.WorkshopManuals.co.uk

## Inspection procedure 10

| When the engine becomes hot, it stalls at idling. (Die out) | Probable cause |
|---|---|
| In such cases as the above, the cause is probably that ignition system, air/fuel mixture, electronic-controlled throttle valve system, compression pressure is defective. In addition, if the engine suddenly stalls, the cause may also be a defective connector contact. | • Malfunction of the ignition system<br>• Malfunction of the air/fuel ratio control system<br>• Malfunction of the electronic-controlled throttle valve system<br>• Malfunction of the throttle body<br>• Improper connector contact<br>• Drawing air into intake system |

Has the battery been disconnected recently?
- YES → After warming-up, let the engine run at idling for 10 minutes.
- NO ↓

**MUT-II Self-Diag Code**
Is a diagnosis code set?
- YES → Refer to P.13A-130, INSPECTION CHART FOR DIAGNOSIS CODES.
- NO ↓

**MUT-II Data list**
79 Throttle position sensor (1st channel) (Refer to P.13A-198.)
- NG → Check the throttle valve position feedback system. (Refer to P.13A-162, code No.92.)
- OK ↓

Does the engine stall easily again?
- NO → While carrying out an intermittent malfunction simulation test (Refer to GROUP 00 - Points to Note for Intermittent Malfunctions.), check for sudden changes in the signals shown below.
  - Crank angle sensor signal
  - Injector activating signal
  - Low pressure fuel pump drive signal
  - Air flow sensor
  - Primary ignition signal
  - Engine-A/T-ECU power supply voltage
- YES ↓

**MUT-II Data list**
26 Accelerator pedal position switch (Refer to P.13A-198.)
- NG → Check the accelerator pedal position switch system. (Refer to P.13A-192, Inspection procedure 28.)
- OK ↓

**MUT-II Data list**
13 Intake air temperature sensor (Refer to P.13A-198.)
- NG → Check the intake air temperature sensor system. (Refer to P.13A-135, code No.13.)
- OK ↓

**MUT-II Data list**
25 Barometric pressure sensor (Refer to P.13A-198.)
- NG → Check the barometric pressure sensor system. (Refer to P.13A-145, code No.25.)
- OK ↓

**MUT-II Data list**
21 Engine coolant temperature sensor (Refer to P.13A-198.)
- NG → Check the engine coolant temperature sensor system. (Refer to P.13A-138, code No.21.)
- OK ↓

**MUT-II Data list**
11 Oxygen sensor (Refer to P.13A-198.)
**OK** 600 - 1,000 mV when the engine is suddenly raced.
- NG → Check Oxygen sensor system (Refer to P.13A-131, code No.11.)
- OK ↓

**MUT-II Data list**
11 Oxygen sensor (Refer to P.13A-198.)
**OK** 0 - 400 mV and 600 - 1,000 mV alternates when the engine is idling (wait for 2 minutes after the engine is started).
- NG → Measure fuel high-pressure between the fuel pump (high pressure) and injector. (Refer to P.13A-222.)
  - OK ↓ Check that air is sucked in the air intake system.
    - Broken intake manifold gasket
    - Damaged vacuum hose
    - Damaged air intake hose
- OK ↓

To the next page

Purchased from www.WorkshopManuals.co.uk

www.WorkshopManuals.co.uk

From the previous page

OK ↓

**MUT-II Data list**
27 Power steering oil pressure switch (Refer to P.13A-198.)

NG → Check the power steering oil pressure switch system (Refer to P.13A-194, Inspection procedure30.)

OK ↓

**MUT-II Data list**
28 A/C switch (Refer to P.13A-198.)

NG → Check the A/C switch and A/C relay system (Refer to P.13A-194, Inspection procedure 31.)

OK ↓

**MUT-II Data list**
31 Small lamp switch (Refer to P.13A-198.)

NG → Check the small lamp switch system (Refer to P.13A-195, Inspection procedure 33.)

OK ↓

**MUT-II Data list**
34 Air flow sensor reset signal (Refer to P.13A-198.)

NG → Check the air flow sensor system (Refer to P.13A-133, code No.12.)

OK ↓

**MUT-II Data list**
14 Throttle position sensor (2nd channel)
After warming-up, let the engine run at idling with no load.
**OK:** 3,900 - 4,800 mV

NG →
- Clean around the throttle valve. (Refer to P.13A-220)
- Adjust the throttle position sensor (Refer to P.13A-220.)

OK ↓

**MUT-II Data list**
68 EGR valve (Refer to P.13A-198.)

NG → Check the EGR valve system (Refer to P.13A-196, Inspection procedure 35.)

OK ↓

Does the engine stall right after the accelerator pedal is released?

YES → Clean around the throttle valve. (Refer to P.13A-220.)

NO ↓

Check the ignition timing. (Refer to GROUP 11A - Engine Adjustment.)

OK → Check that the crank angle sensor and timing belt cover are properly installed.

NG ↓

Check ignition coil spark for each cylinder.
1. Remove the ignition coil.
2. Install a new spark plug to the removed ignition coil.
3. Disconnect the injector intermediate connector.

**Caution**
**Never touch the connector terminal as approx. 100 V is applied to the injector, or you are seriously injured.**

4. Earth the spark plug electrode securely.
5. Check that the spark plug ignites when the engine is cranked.

NG → Replace the ignition coil.

OK ↓

Check the following items in that order.
- Check the spark plug
- Check the compression pressure
- Check if foreign materials (water, kerosine,etc.) got into fuel.

Purchased from www.WorkshopManuals.co.uk

www.WorkshopManuals.co.uk

## Inspection procedure 11

| The engine stalls when starting the car. (Pass out) | Probable cause |
|---|---|
| In cases such as the above, the cause is probably misfiring due to a weak spark, or an inappropriate air/fuel mixture when the accelerator pedal is depressed. | • Malfunction of the ignition system<br>• Malfunction of the EGR valve<br>• Air stuck in the air intake system |

**MUT-II Self-Diag Code**
Is a diagnosis code set?

YES → Refer to P.13A-130, INSPECTION CHART FOR DIAGNOSIS CODES.

NO ↓

**MUT-II Data list**
68 EGR valve (Refer to P.13A-198)

NG → Check the EGR valve system (Refer to P.13A-196, Inspection procedure 35.)

OK ↓

**MUT-II Actuator Test**
08 Purge control solenoid valve (Refer to P.13A-203.)

NG → Check the purge control solenoid valve system (Refer to P.13A-197, Inspection procedure 36.)

OK ↓

Check ignition coil spark for each cylinder.
1. Remove the ignition coil.
2. Install a new spark plug to the removed ignition coil.
3. Disconnect the injector intermediate connector.

**Caution**
**Never touch the connector terminal as approx. 100 mV is applied to the injector, or you are seriously injured.**

4. Earth the spark plug electrode securely.
5. Check that the spark plug ignites when the engine is cranked.

NG → Replace the ignition coil.

OK ↓

Check the following items in that order.
- Check the spark plug
- Check that air is sucked in the air intake system.
- Broken intake manifold gasket
- Damaged or disconnected vacuum hose
- Damaged air intake hose

Purchased from www.WorkshopManuals.co.uk

www.WorkshopManuals.co.uk

## Inspection procedure 12

| The engine stalls when decelerating. | Probable cause |
|---|---|
| The cause is probably an improper air/fuel ratio due to a faulty EGR system, or poor intake air volume due to a faulty electronic-controlled throttle valve system. | • Malfunction of the electronic-controlled throttle valve system<br>• Malfunction of the EGR valve |

Has the battery been disconnected recently?
- YES → After warming-up, let the engine run at idling for 10 minutes.
- NO ↓

**MUT-II Self-Diag Code**
Is a diagnosis code set?
- YES → Refer to P.13A-130, INSPECTION CHART FOR DIAGNOSIS CODES.
- NO ↓

**MUT-II Data list**
26 Accelerator pedal position switch (Refer to P.13A-198.)
- NG → Check the accelerator pedal position switch system. (Refer to P.13A-192, Inspection procedure 28)
- OK ↓

**MUT-II Data list**
79 Throttle position sensor (1st channel) (Refer to P.13A-198.)
- NG → Check the throttle valve position feedback system (Refer to P.13A-162, code No.P92)
- OK ↓

Check the vehicle speed sensor system (Refer to P.13A-144, code No.24.)
- NG → **Repair**
- NO ↓

**MUT-II Data list**
68 EGR valve (Refer to P.13A-198.)
- NG → Check the EGR valve system (Refer to P.13A-196, Inspection procedure 35.)
- OK ↓

Check ignition coil spark for each cylinder.
1. Remove the ignition coil.
2. Install a new spark plug to the removed ignition coil.
3. Disconnect the injector intermediate connector.

**Caution**
**Never touch the connector terminal as approx. 100 V is applied to the injector, or you are seriously injured.**

4. Earth the spark plug electrode securely.
5. Check that the spark plug ignites when the engine is cranked.

- NG → Replace the ignition coil.
- OK ↓

Check the following items in that order.
- Check the spark plug
- Clean around the throttle valve. (Refer to P.13A-220.)
- Adjust the throttle position sensor (Refer to P.13A-220.)

Purchased from www.WorkshopManuals.co.uk

www.WorkshopManuals.co.uk

## Inspection procedure 13

| Hesitation, sag, stumble, poor acceleration or surge | Probable cause |
|---|---|
| The cause is probably a malfunction of the ignition system, air/fuel ratio control system, electronic controlled throttle valve system, compression pressure, etc. | • Malfunction of the ignition system<br>• Malfunction of the air/fuel ratio control system<br>• Malfunction of the electronic-controlled throttle valve system<br>• Improper compression pressure<br>• Air stuck in the air intake system |

**MUT-II Self-Diag Code**
Is a diagnosis code displayed?
- YES → Refer to P.13A-130, INSPECTION CHART FOR DIAGNOSIS CODES.
- NO ↓

Check the ignition timing. (Refer to GROUP11A - Engine Adjustment)
- NG → Check that the crank angle sensor and timing belt cover are properly installed.
- OK ↓

**MUT-II Data list**
26 Accelerator pedal position switch
(Refer to P.13A-198.)
- NG → Check the accelerator pedal position switch system. (Refer to P.13A-192, Inspection procedure 28.)
- OK ↓

**MUT-II Data list**
13 Intake air temperature sensor (Refer to P.13A-198.)
- NG → Check the intake air temperature sensor system (Refer to P.13A-135, code No.13.)
- OK ↓

**MUT-II Data list**
25 Barometric pressure sensor (Refer to P.13A-198.)
- NG → Check the barometric pressure sensor system (Refer to P.13A-145, code No.25.)
- OK ↓

**MUT-II Data list**
21 Engine coolant temperature sensor (Refer to P.13A-198.)
- NG → Check the engine coolant temperature sensor system (Refer to P.13A-138, code No.21.)
- OK ↓

**MUT-II Data list**
79 Throttle position sensor (1st channel) (Refer to P.13A-198.)
- NG → Check the throttle valve position feedback system (Refer to P.13A-162, code No.92.)
- OK ↓

**MUT-II Data list**
11 Oxygen sensor (Refer to P.13A-198.)
**OK:** 600 - 1,000 mV when the engine is suddenly raced
- NG → Check the oxygen sensor system. (Refer to P.13A-131, code No.11.)
- OK ↓

**MUT-II Data list**
11 Oxygen sensor (Refer to P.13A-198.)
**OK:** 0 - 400 mV and 600 - 1,000 mV alternates when the engine is idling (wait for 2 minutes after the engine is started).
- NG → Measure fuel high-pressure between the fuel pump (high pressure) and injector. (Refer to P.13A-222.)
  - OK ↓ Check that air is sucked in the air intake system.
    - Broken intake manifold gasket
    - Damaged vacuum hose
    - Damaged air intake hose
- OK ↓

**MUT-II Data list**
68 EGR valve (Refer to P.13A-198.)
- NG → Check the EGR valve system (Refer to P.13A-196, Inspection procedure 35.)
- OK ↓

To the next page

Purchased from www.WorkshopManuals.co.uk

www.WorkshopManuals.co.uk

From the previous page

OK ↓

**MUT-II Actuator Test**
08 Purge control solenoid valve
(Refer to P.13A-203.)

NG → Check the purge control solenoid valve system (Refer to P.13A-197, Inspection procedure 36.)

OK ↓

Measure fuel high-pressure between the fuel pump (high pressure) and injector. (Refer to P.13A-222.)

NG → **Repair**

OK ↓

Check ignition coil spark for each cylinder.
1. Remove the ignition coil.
2. Install a new spark plug to the removed ignition coil.
3. Disconnect the injector intermediate connector.

**Caution**
**Never touch the connector terminal as approx. 100 V is applied to the injector, or you are seriously injured.**

4. Earth the spark plug electrode securely.
5. Check that the spark plug ignites when the engine is cranked.

NG → Replace the ignition coil.

OK ↓

Check the following items in that order.
- Check the spark plug
- Check the EGR control system
- Check the compression pressure
- Check the fuel filter or fuel line for clogging

Check the trouble symptoms.

NG → Replace the injector.

## Inspection procedure 14

| The feeling of impact or vibration when accelerating | Probable cause |
|---|---|
| In cases such as the above, the cause is probably that there is an ignition leak accompanying the increase in the spark plug demand voltage during acceleration. | • Malfunction of the ignition system |

**MUT-II Self-Diag Code**
Is a diagnosis code displayed?

YES → Refer to P.13A-130, INSPECTION CHART FOR DIAGNOSIS CODES.

NO ↓

**MUT-II Data list**
79 Throttle position sensor (1st channel) (Refer to P.13A-198.)

NG → Check the throttle valve position feedback system (Refer to P.13A-162, code No.92.)

OK ↓

Check the spark plug

NG → **Replace**

OK ↓

Check the trouble symptoms.

NG ↓

Replace the ignition coil.

Purchased from www.WorkshopManuals.co.uk

www.WorkshopManuals.co.uk

## Inspection procedure 15

| The feeling of impact or vibration when decelerating | Probable cause |
|---|---|
| The cause is probably insufficient intake air due to a faulty electronic-controlled throttle valve system. | • Malfunction of the electronic-controlled throttle valve system |

**MUT-II Self-Diag Code**
Are diagnosis codes displayed?
- YES → Refer to P.13A-130, INSPECTION CHART FOR DIAGNOSIS CODES.
- NO ↓

**MUT-II Data list**
79 Throttle position sensor (1st channel) (Refer to P.13A-198.)
- NG → Check the throttle valve position feedback system (Refer to P.13A-162, code No.92.)
- OK ↓

**MUT-II Data list**
26 Accelerator pedal position switch (Refer to P.13A-198.)
- NG → Check the accelerator pedal position switch system (Refer to P.13A-192, Inspection procedure 28.)
- OK ↓

Clean around the throttle valve. (Refer to P.13A-220.)

## Inspection procedure 16

| Knocking | Probable cause |
|---|---|
| In case as the above, the cause is probably that the heat value of the spark plug is inappropriate. | • Malfunction of the detonation sensor<br>• Improper heat range of the spark plugs. |

**MUT-II Self-Diag Code**
Is a diagnosis code set?
- YES → Refer to P.13A-130, INSPECTION CHART FOR DIAGNOSIS CODES.
- NO ↓

Does knocking occur when the vehicle is driven with the detonation sensor disconnected?
(At this time, use the MUT-II to check whether the ignition timing is retarded from when the detonation sensor connector is connected.)
- NO → Check the detonation sensor system. (Refer to P.13A-146, code No.31.)
- YES ↓

Check the following items in that order.
- Spark plugs
- Check if foreign materials (water, kerosine,etc.) got into fuel.

## Inspection procedure 17

| Run-on (Dieseling) | Probable cause |
|---|---|
| Fuel leakage from injectors is suspected. | • Malfunction of the injector |

Replace the injector.

Purchased from www.WorkshopManuals.co.uk

www.WorkshopManuals.co.uk

## Inspection procedure 18

| Too high CO and HC concentration when idling | Probable cause |
|---|---|
| Abnormal air-fuel ratio is suspected. | • Malfunction of the air/fuel ratio control system<br>• Deteriorated catalyst |

**MUT-II Self-Diag Code**
Are diagnosis codes displayed?
- YES → Refer to P.13A-130, INSPECTION CHART FOR DIAGNOSIS CODES.
- NO ↓

Check the ignition timing. (Refer to GROUP 11A - Engine Adjustment.)
- NG → Check that the crank angle sensor and timing belt cover are properly installed.
- OK ↓

**MUT-II Data list**
21 Engine coolant temperature sensor (Refer to P.13A-198.)
- NG → Check the engine coolant temperature sensor system (Refer to P.13A-138, code No.21.)
- OK ↓

**MUT-II Data list**
13 Intake air temperature sensor (Refer to P.13A-198.)
- NG → Check the intake air temperature sensor system (Refer to P.13A-135, code No.13.)
- OK ↓

**MUT-II Data list**
25 Barometric pressure sensor (Refer to P.13A-198.)
- NG → Check the barometric pressure sensor system (Refer to P.13A-145, code No.25.)
- OK ↓

**MUT-II Data list**
68 EGR valve (Refer to P.13A-198.)
- NG → Check the EGR valve system (Refer to P.13A-196, Inspection procedure 35.)
- OK ↓

**MUT-II Actuator Test**
08 Purge control solenoid valve
(Refer to P.13A-203.)
- NG → Check the purge control solenoid valve system (Refer to P.13A-197, Inspection procedure 36.)
- OK ↓

**MUT-II Data list**
11 Oxygen sensor (Refer to P.13A-198.)
**OK:** 600 - 1,000 mV when the engine is suddenly raced
- NG → Check the oxygen sensor system. (Refer to P.13A-131, code No.11.)
- OK ↓

**MUT-II Data list**
11 Oxygen sensor (Refer to P.13A-198.)
**OK:** Repeat 0 - 400 mV and 600 - 1,000 mV alternately during idling (wait for at least 2 minutes after the engine started to run at idle).
- OK → Replace the oxygen sensor. → Check the trouble symptoms. → NG ↓
- NG ↓

Measure fuel high-pressure between the fuel pump (high pressure) and injector. (Refer to P.13A-223.)
- OK ↓

Check ignition coil spark for each cylinder.
1. Remove the ignition coil.
2. Install a new spark plug to the removed ignition coil.
3. Disconnect the injector intermediate connector.

**Caution**
**Never touch the connector terminal as approx. 100 V is applied to the injector, or you are seriously injured.**

4. Earth the spark plug electrode securely.
5. Check that the spark plug ignites when the engine is cranked.

- OK → To the next page
- NG → Replace the ignition coil.

Purchased from www.WorkshopManuals.co.uk

www.WorkshopManuals.co.uk

From the previous page

OK

Check the following items in that order.
- Check the spark plug
- Check the compression pressure
- Check the positive crankcase ventilation system.

Check the trouble symptoms.

NG → Replace the injector.

Check the trouble symptoms.

NG

Replace the catalytic converter.

## Inspection procedure 19

| Low alternator output voltage (approx. 12.3 V) | Probable cause |
|---|---|
| The cause is probably a malfunction of the alternator or one of the problems listed at right. | • Malfunction of the charging system<br>• Open circuit between the alternator G terminal and the engine-A/T-ECU<br>• Malfunction of the engine-A/T-ECU |

Measure at alternator connector B-59
- Connect the connector.
  (Use test harness: MB991519)
- The voltage between terminal 1 (black clip) and earth
  (Engine: Idling)
  (Headlamp: OFF to ON)
  (Stop lamp: OFF to ON)
  (Rear defogger switch: OFF to ON)
  **OK:** The voltage increases by 0.2 - 3.5 V

OK → Check the alternator (Refer to GROUP16 - Charging System.)

NG → Measure at alternator connector B-59
- Disconnect the connector, and measure at the harness side.
- Disconnect the engine-A/T-ECU connector
- The continuity between terminal 1 and earth
  **OK:** No continuity

NG → Check the harness wire between the alternator and the engine-A/T-ECU, and repair if necessary.

OK → **Check the following connectors:** B-41, D-119

NG → **Repair**

OK → Check the trouble symptoms.

NG → Check the harness wire between the alternator and the engine-A/T-ECU.

NG → **Repair**

OK → Replace the engine-A/T-ECU.

Purchased from www.WorkshopManuals.co.uk

www.WorkshopManuals.co.uk

## Inspection procedure 20

| Idling speed is improper when A/C is operating (A/C switch 2 signal) | Probable cause |
|---|---|
| The A/C-ECU judges if load caused by air conditioner is high or low, and converts it to A/C switch 2 signal to send the engine-A/T-ECU it.<br>Based on this signal, the engine-A/T-ECU operates the throttle control servo to control the idle-up speed. | • Malfunction of the A/C control system<br>• Open or short circuit, or loose connector contact<br>• Malfunction of the engine-A/T-ECU |

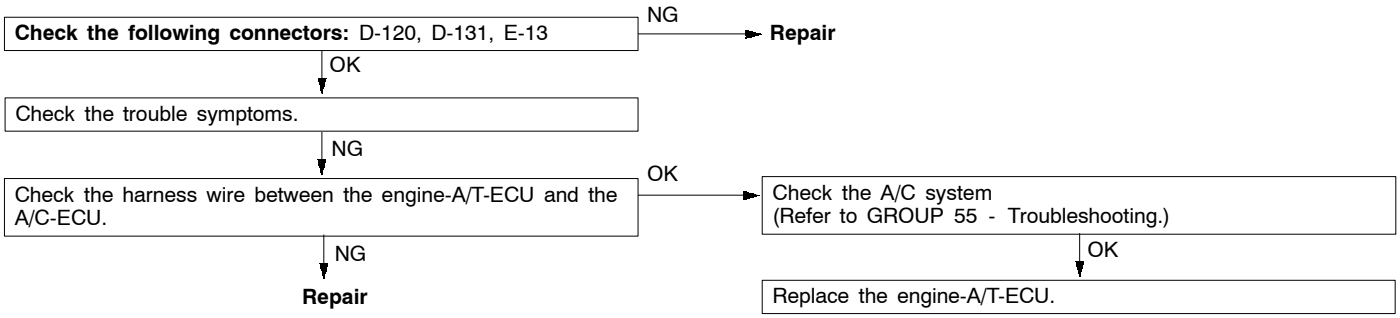


## Inspection procedure 21

| A/C condenser fan is inoperative | Probable cause |
|---|---|
| The fan motor relay is controlled by turning on and off the power transistor in the engine-A/T-ECU. | • Malfunction of the A/C condenser fan relay.<br>• Malfunction of the A/C condenser fan motor.<br>• Open or short circuit, or loose connector contact<br>• Malfunction of the engine-A/T-ECU |

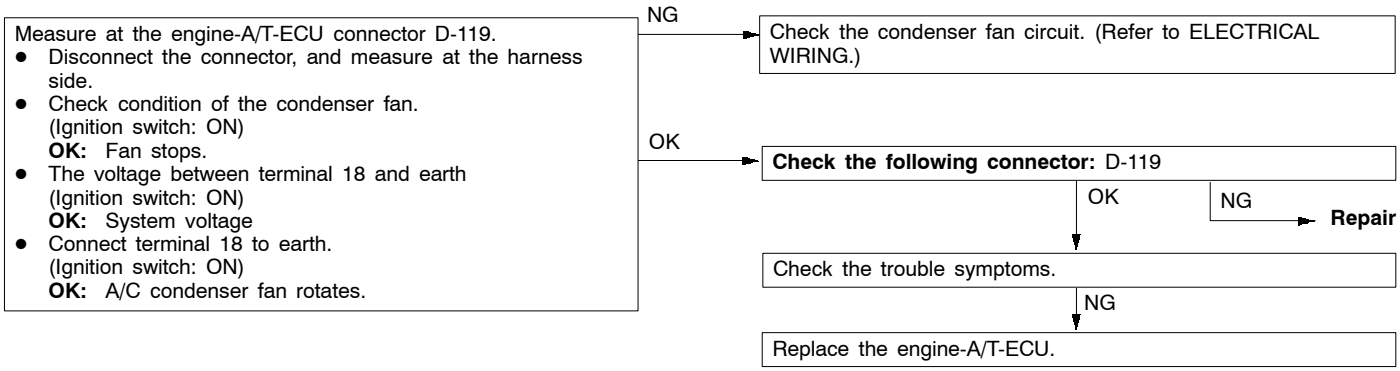


Purchased from www.WorkshopManuals.co.uk

www.WorkshopManuals.co.uk

## Inspection procedure 22

| GDI ECO indicator lamp does not illuminate. | Probable cause |
|---|---|
| If the GDI ECO indicator lamp does not illuminate after turning switch, the causes listed in the right column are suspected. | • Burned-out GDI ECO indicator lamp bulb<br>• Open circuit or short-circuited harness wire in the GDI ECO indicator lamp circuit<br>• Malfunction of the engine-A/T-ECU<br>• Malfunction of the GDI ECO indicator lamp ECU |

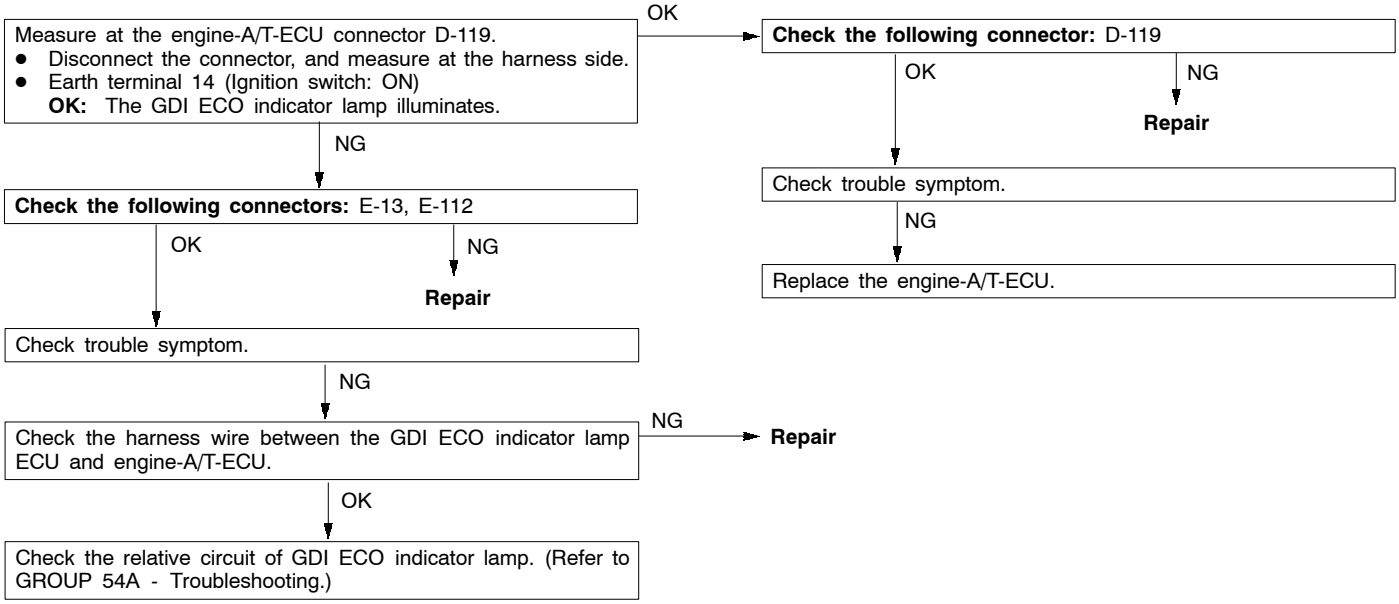


## Inspection procedure 23

| GDI ECO indicator lamp remains illuminated and does not go off. | Probable cause |
|---|---|
| If the GDI ECO indicator lamp does not go off during high load operation, the causes listed in the right column are suspected. | • Short circuit between the GDI ECO indicator lamp and engine-A/T-ECU<br>• Malfunction of the engine-A/T-ECU<br>• Malfunction of the GDI ECO indicator lamp ECU |

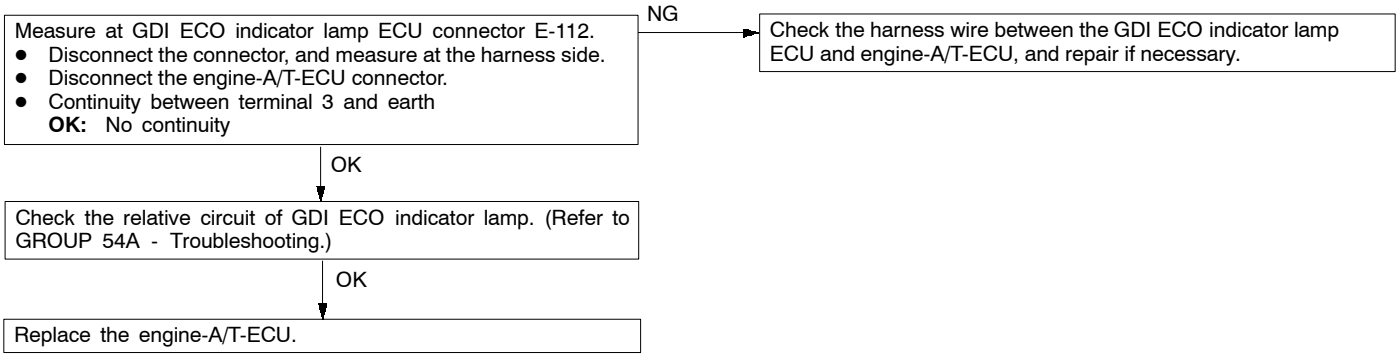


Purchased from www.WorkshopManuals.co.uk

www.WorkshopManuals.co.uk

## Inspection procedure 24

| Engine-A/T-ECU power supply and earth circuit system | Probable cause |
|---|---|
| The cause is probably the malfunction of the engine-A/T-ECU, or the malfunctions listed at right. | • Open circuit or short-circuited harness wire in the engine-A/T-ECU power supply circuit.<br>• Open circuit or short-circuited harness wire to earth in the engine-A/T-ECU.<br>• Malfunction of the engine-A/T-ECU |

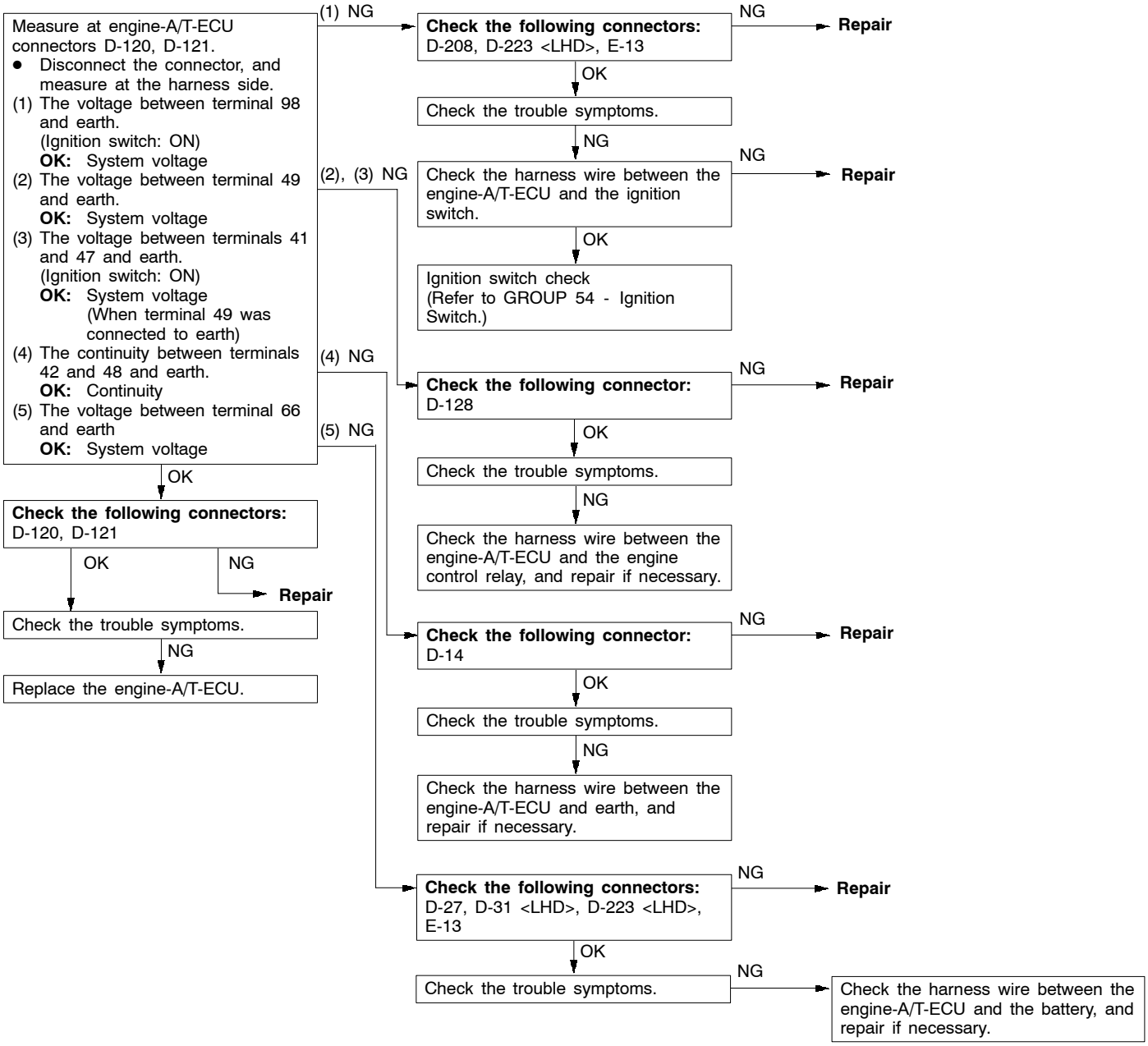


Purchased from www.WorkshopManuals.co.uk

www.WorkshopManuals.co.uk

## Inspection procedure 25

| Engine control relay, ignition switch-IG system | Probable cause |
|---|---|
| When an ignition switch ON signal is input to the engine-A/T-ECU, the engine-A/T-ECU turns the control relay ON.<br>This causes system voltage to be supplied to the engine-A/T-ECU, sensors, and actuators. | • Malfunction of the ignition switch<br>• Malfunction of the control relay.<br>• Open circuit or short-circuited harness wire in the engine control relay circuit.<br>• Malfunction of the engine-A/T-ECU |

Check the control relay.
(Refer to P.13A-227.)
- NG → **Replace**
- OK ↓

Measure at control relay connector B-25X.
- Disconnect the connector, and measure at the harness side.
- The voltage between 2, 3 and earth
  **OK:** System voltage

- NG → Check the harness wire between the battery and the engine control relay, and repair if necessary.
- OK → Check the engine-A/T-ECU power supply and earth circuit. (Refer to P.13A-189, Inspection procedure 24.)

## Inspection procedure 26

| Injector driver relay system | Probable cause |
|---|---|
| When an ignition switch ON signal is input to the engine-A/T-ECU, the engine-A/T-ECU turns the injector driver relay ON.<br>This causes system voltage to be supplied to the injector driver. | • Malfunction of the injector driver relay.<br>• Open or short circuit, or loose connector contact<br>• Malfunction of the engine-A/T-ECU |

Check the injector driver relay (Refer to P.13A-227.)
- NG → **Replace**
- OK ↓

Measure at the injector driver relay connector B-28X.
- Disconnect the connector, and measure at the harness side.

(1) The voltage between terminal 3 and earth
**OK:** System voltage
(2) The voltage between terminal 4 and earth (Ignition switch: ON)
**OK:** System voltage

- (1) NG → Check the harness wire between the injector driver relay and the battery, and repair if necessary.
- (2)NG → **Check the following connectors:** D-208, D-223 <LHD>, E-13
  - OK ↓
  - NG → **Repair**

  Check the trouble symptoms.
  - NG ↓

  Check the harness wire between the injector driver relay and the ignition switch, and repair if necessary.
- OK ↓

Measure at engine-A/T-ECU connector D-119.
- Disconnect the connector, and measure at the harness side.
- The voltage between terminal 6 and earth (Ignition switch: ON)
  **OK:** System voltage

- NG → **Check the following connector:** B-28X
  - OK ↓
  - NG → **Repair**

  Check the trouble symptoms.
  - NG ↓

  Check the harness wire between the injector driver relay and the engine-A/T-ECU, and repair if necessary.
- OK ↓

**Check the following connector:** D-119
- OK ↓
- NG → **Repair**

Check the trouble symptoms.
- NG ↓

Measure at injector driver connector B-121.
- Connect the connector.
- The voltage between terminal 4, 12, 21 and earth (Ignition switch: ON)
  **OK:** System voltage

- NG → **Check the following connector:** B-28X
  - OK ↓
  - NG → **Repair**

  Check the trouble symptoms.
  - NG ↓

  Check the harness wire between the injector driver relay and the injector driver, and repair if necessary.
- OK ↓

Check the injector driver system.
(Refer to P.13A-196, Inspection procedure 34.)

Purchased from www.WorkshopManuals.co.uk

www.WorkshopManuals.co.uk

## Inspection procedure 27

| Ignition switch-ST and inhibitor switch system | Probable cause |
|---|---|
| The ignition switch-ST inputs a HIGH signal to the engine-A/T-ECU while the engine is cranking. The engine-A/T-ECU controls fuel injection, etc. during starting based on this input.<br>The inhibitor switch inputs the position of the selector lever to the engine-A/T-ECU. The engine-A/T-ECU uses this signal to carry out idle speed control. | • Malfunction of the ignition switch<br>• Malfunction of the inhibitor switch<br>• Open circuit or short-circuited harness wire between the ignition switch and the inhibitor switch, or improper connector contact.<br>• Malfunction of the engine-A/T-ECU |

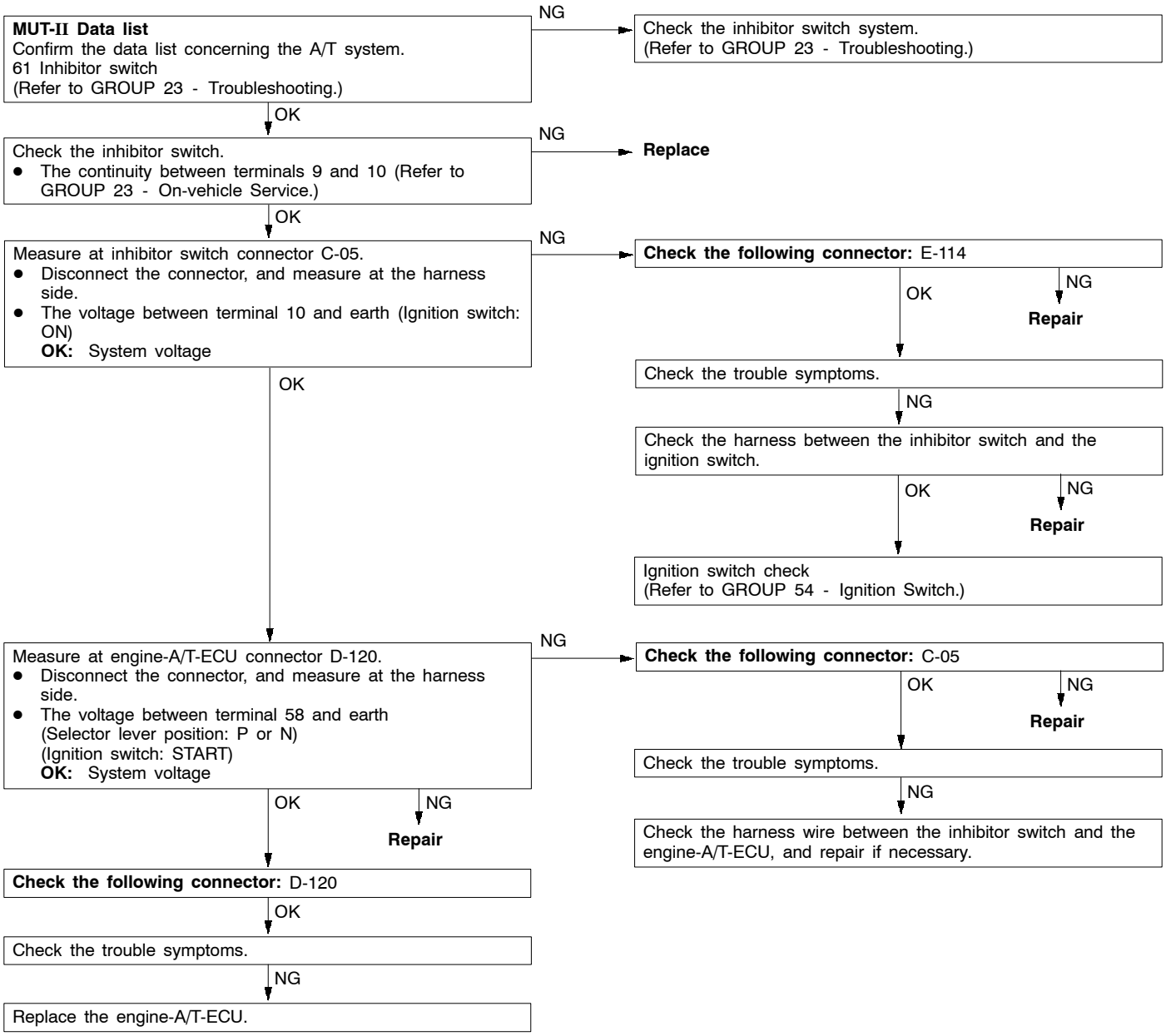


Purchased from www.WorkshopManuals.co.uk

www.WorkshopManuals.co.uk

## Inspection procedure 28

| Accelerator pedal position switch system | Probable cause |
|---|---|
| The accelerator pedal position switch detects that the accelerator pedal is fully closed, and sends a signal to the engine-A/T-ECU. The engine-A/T-ECU uses this signal to carry out idle speed control. | • Maladjustment of the accelerator pedal position switch and the accelerator pedal position sensor.<br>• Open circuit or short-circuited harness wire in the accelerator pedal position switch system, or poor connector contact<br>• Malfunction of the engine-A/T-ECU |

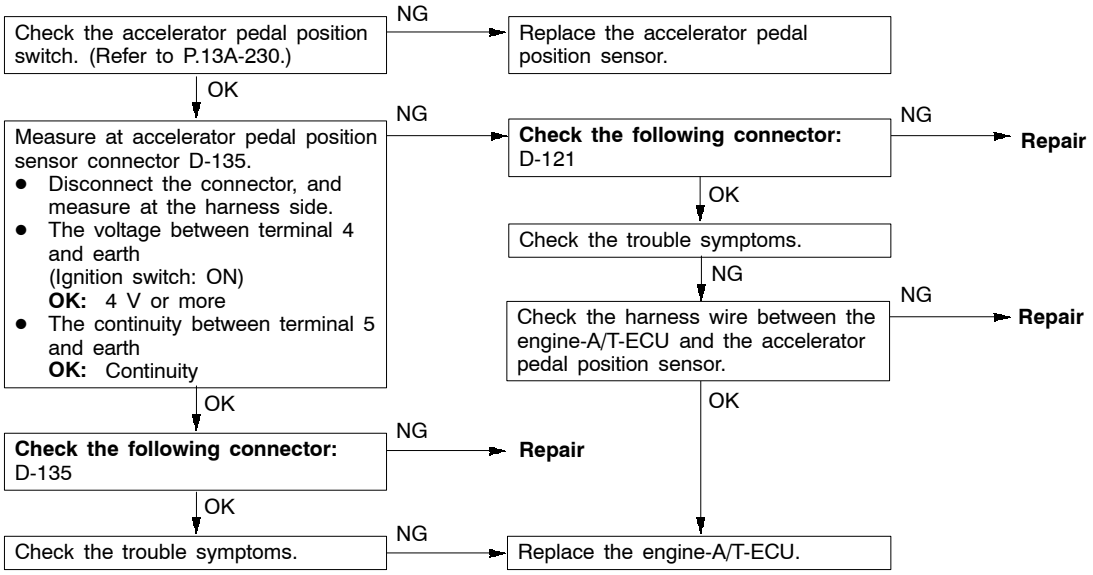


Purchased from www.WorkshopManuals.co.uk

www.WorkshopManuals.co.uk

## Inspection procedure 29

| Fuel pump (low pressure) system | Probable cause |
|---|---|
| The engine-A/T-ECU turns on the fuel pump relay while the engine is cranking or running, and supplies power source to the fuel pump (low pressure). | • Malfunction of the fuel pump relay<br>• Malfunction of the fuel pump (low pressure)<br>• Improper connector contact, open circuit or short-circuited harness wire<br>• Malfunction of the engine-A/T-ECU |

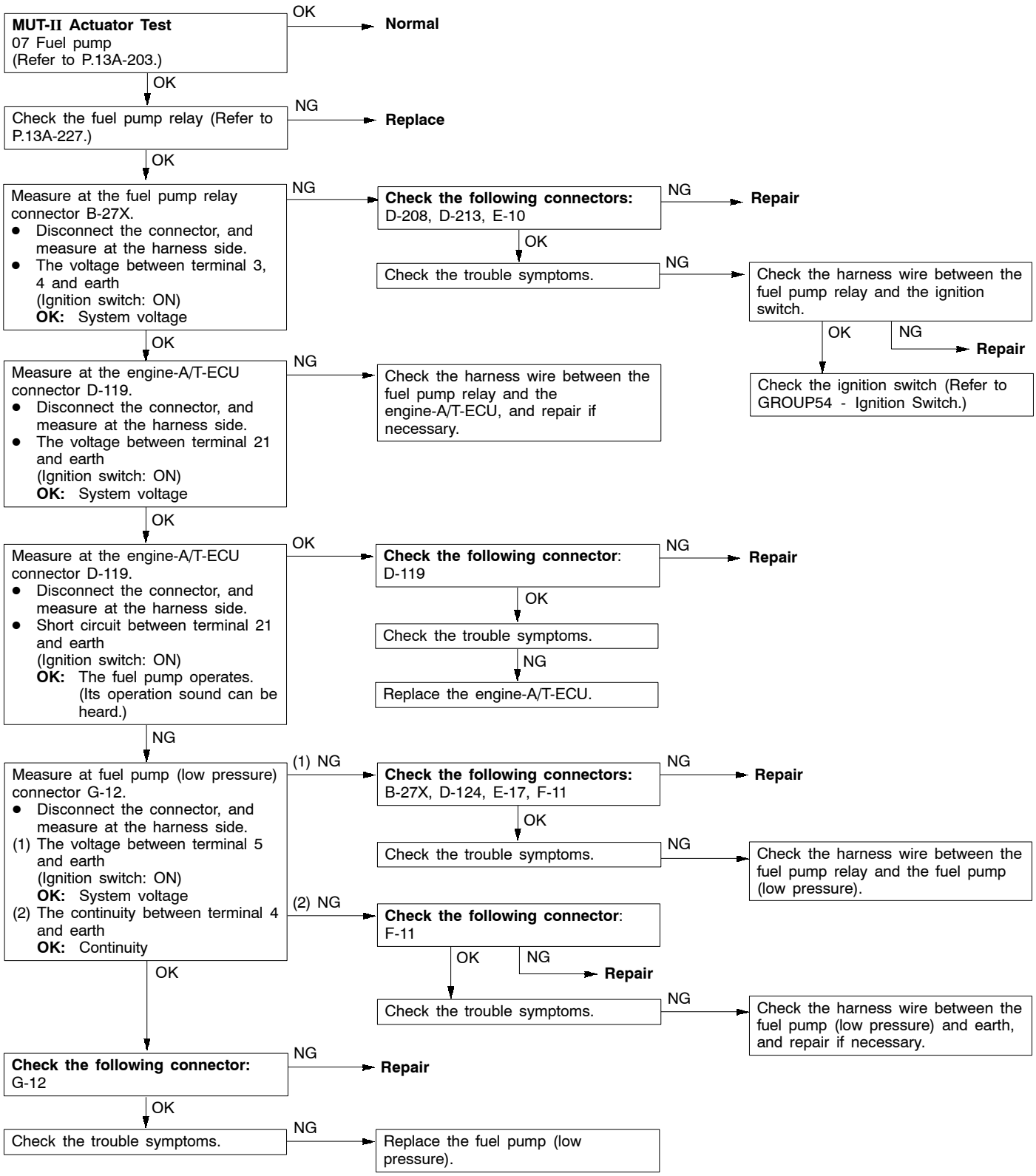


Purchased from www.WorkshopManuals.co.uk

www.WorkshopManuals.co.uk

## Inspection procedure 30

| Power steering fluid pressure switch system | Probable cause |
|---|---|
| The presence or absence of power steering load is input to the engine-A/T-ECU. Based on this signal, the engine-A/T-ECU controls the throttle control servo so that idle speed increases when the power steering is in operation. | • Malfunction of the power steering fluid pressure switch.<br>• Improper connector contact, open circuit or short-circuited harness wire<br>• Malfunction of the engine-A/T-ECU |

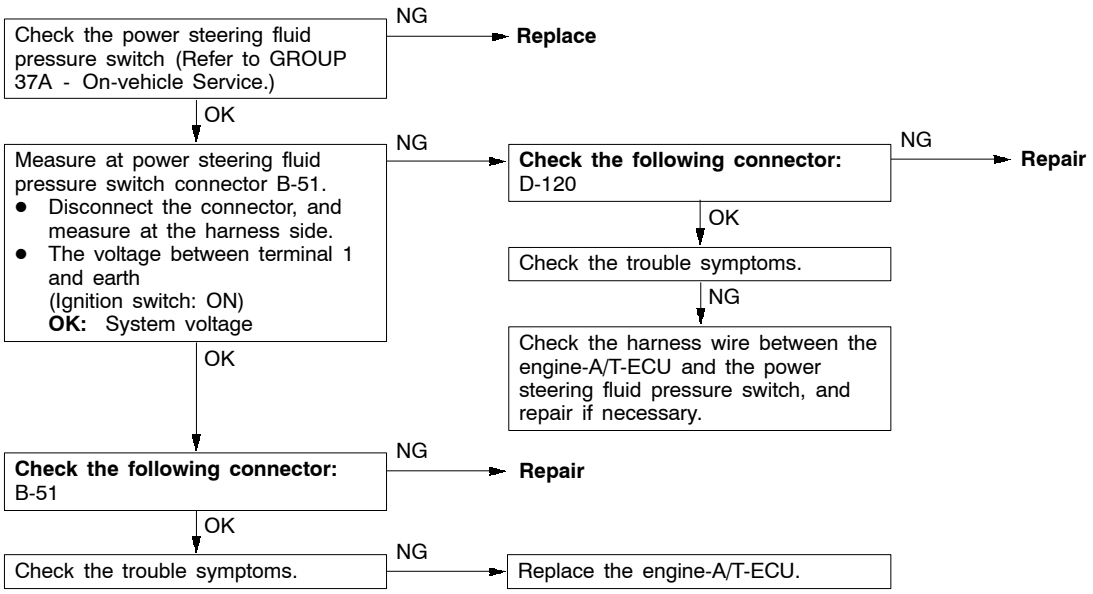


## Inspection procedure 31

| A/C switch and A/C relay system | Probable cause |
|---|---|
| When an A/C ON signal is input to the engine-A/T-ECU, the engine-A/T-ECU controls the throttle control servo so that idle speed increases, and also operates the A/C compressor magnetic clutch. | • Malfunction of the A/C control system<br>• Malfunction of the A/C switch<br>• Improper connector contact, open circuit or short-circuited harness wire<br>• Malfunction of the engine-A/T-ECU |

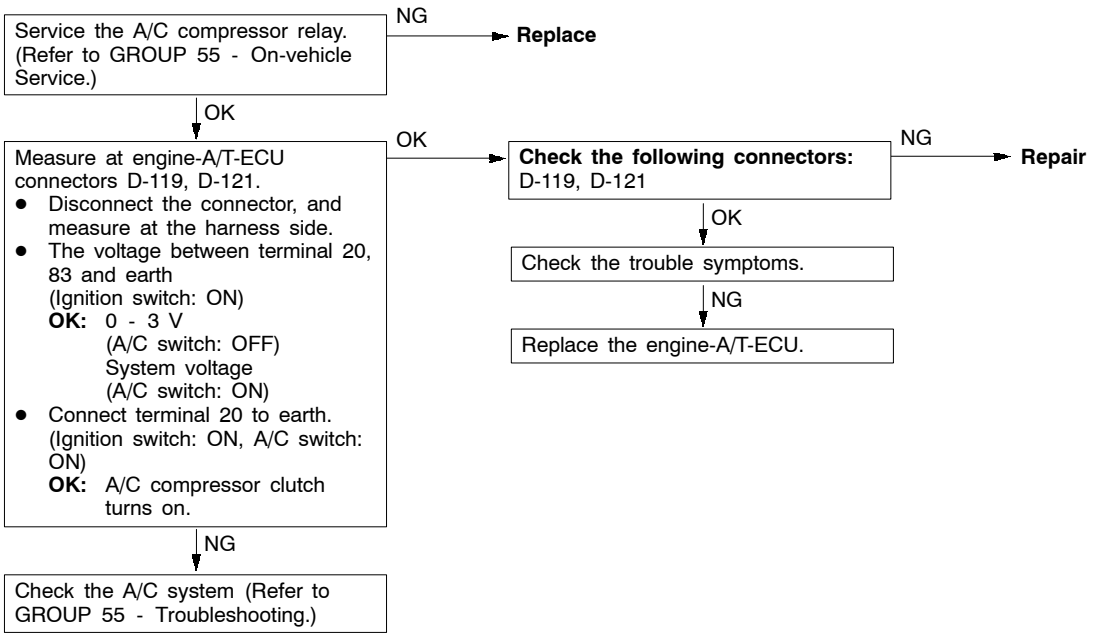


Purchased from www.WorkshopManuals.co.uk

www.WorkshopManuals.co.uk

## Inspection procedure 32

| Stop lamp switch system | Probable cause |
|---|---|
| The engine-A/T-ECU determines whether the brake pedal is depressed or not. The engine-A/T-ECU selects a fuel injection mode by determining the brake operation according to this information. | • Malfunction of the stop lamp switch<br>• Improper connector contact, open circuit or short-circuited harness wire<br>• Malfunction of the engine-A/T-ECU |

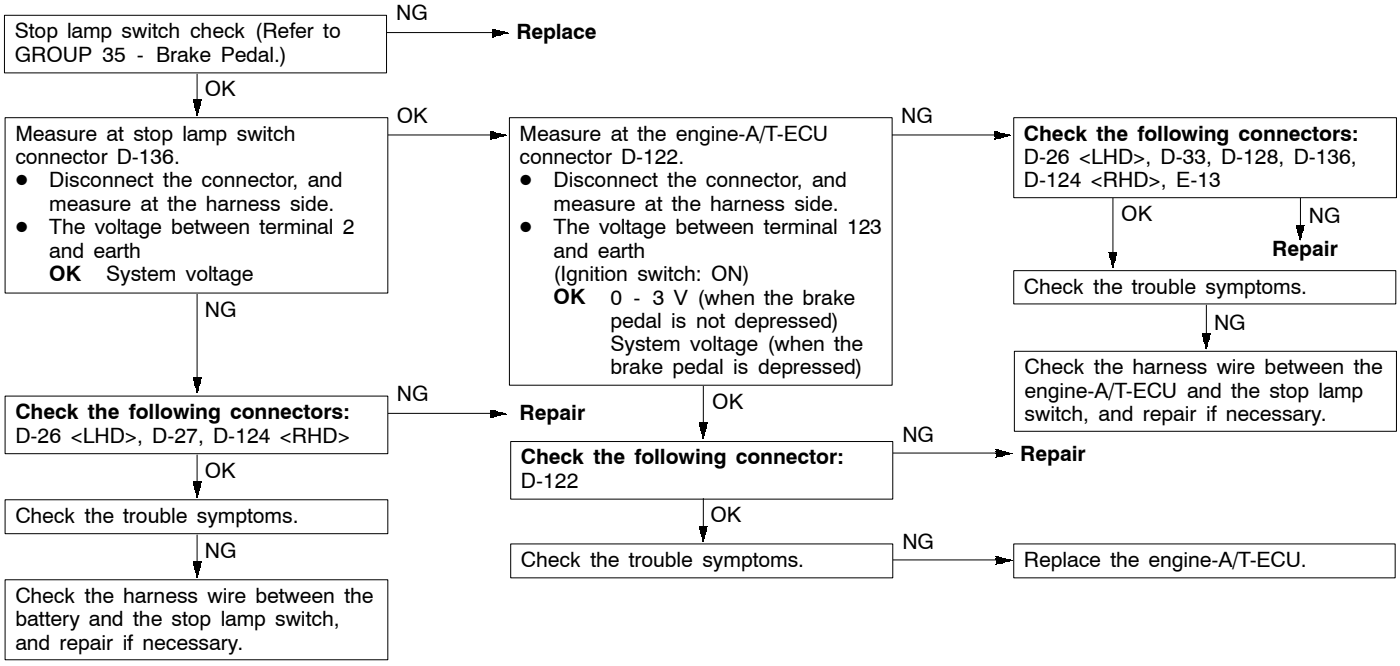


## Inspection procedure 33

| Small lamp switch system | Probable cause |
|---|---|
| The engine-A/T-ECU determines whether the small lamp switch is on or off. According to that information, the engine-A/T-ECU controls alternator output current when the vehicle is started. | • Improper connector contact, open circuit or short-circuited harness wire in the taillamp relay circuit.<br>• Malfunction of the engine-A/T-ECU |

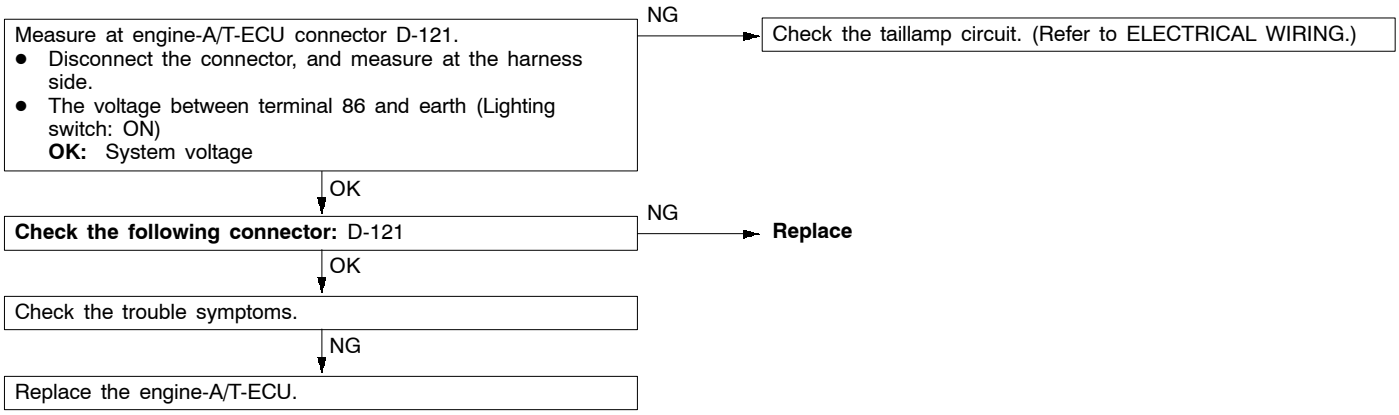


Purchased from www.WorkshopManuals.co.uk

www.WorkshopManuals.co.uk

## Inspection procedure 34

| Injector driver | Probable cause |
|---|---|
| The engine-A/T-ECU drives the injector by the drive signal. | • Malfunction of the injector driver<br>• Improper connector contact, open circuit or short-circuited harness wire<br>• Malfunction of the engine-A/T-ECU |

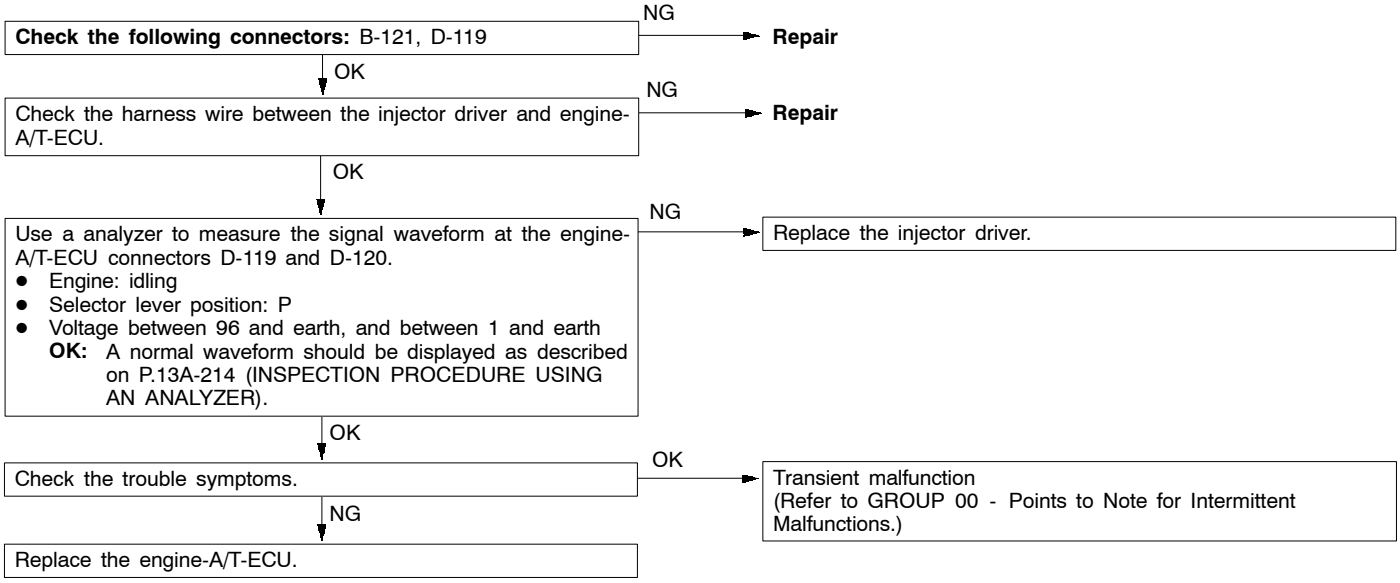


## Inspection procedure 35

| EGR valve (stepper motor) system | Probable cause |
|---|---|
| The engine-A/T-ECU controls the EGR valve (stepper motor) in order to control the amount of exhaust gas mixed in the intake air. | • Malfunction of the EGR valve<br>• Open circuit or short-circuited harness wire in the EGR valve circuit<br>• Malfunction of the engine-A/T-ECU |

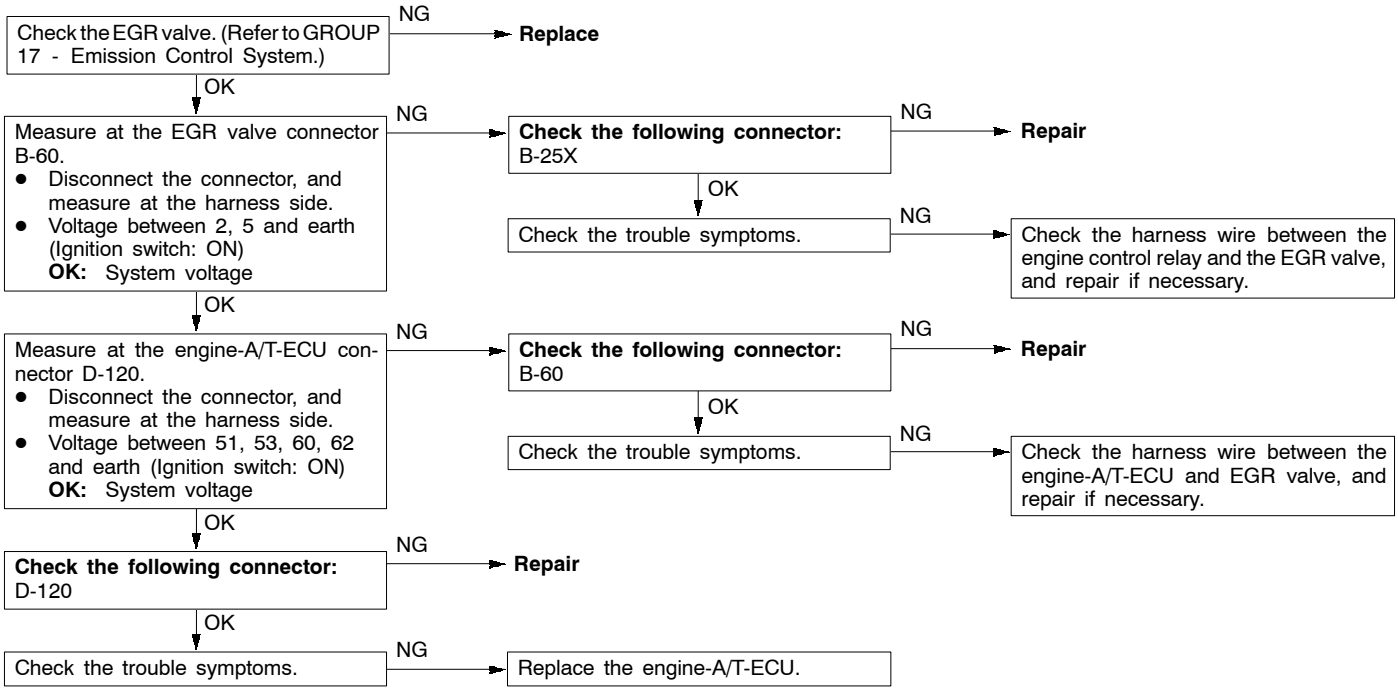


Purchased from www.WorkshopManuals.co.uk

www.WorkshopManuals.co.uk

## Inspection procedure 36

| Purge control solenoid valve system | Probable cause |
|---|---|
| The engine-A/T-ECU controls the purge control solenoid valve in order to control the purge air coming from the canister. | • Malfunction of the purge control solenoid valve<br>• Open circuit or short-circuited harness wire in the purge control solenoid valve circuit<br>• Malfunction of the engine-A/T-ECU |

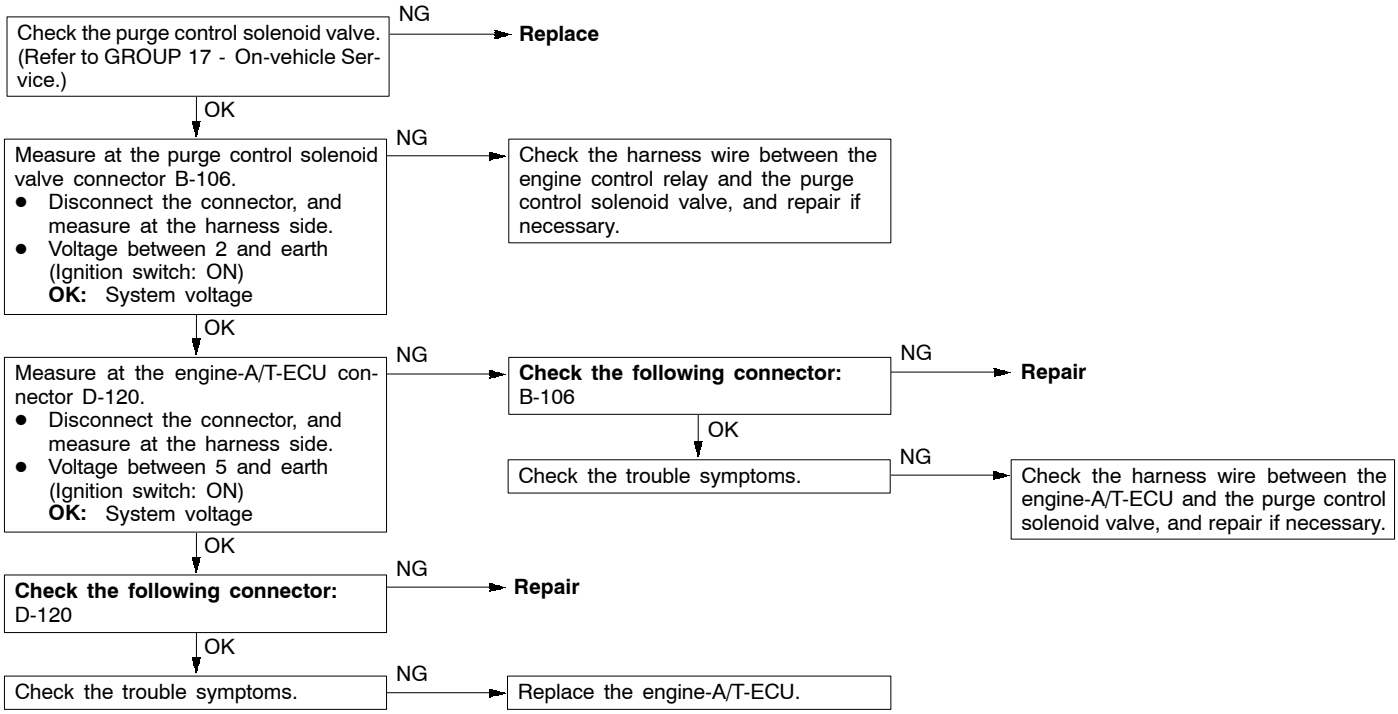


Purchased from www.WorkshopManuals.co.uk

www.WorkshopManuals.co.uk

## DATA LIST REFERENCE TABLE

**Caution**
**When shifting the select lever to D range, the brakes should be applied so that the vehicle does not move forward.**

NOTE
*1: Injector running time indicates the time where the power voltage is 11 V and the cranking speed is 250 r/min or less. As the engine speed increases and the time passes by, the injector running time decreases.
*2: There may be occasions of taking the injector running time approximately 10% longer than usual when a vehicle has not been driven for a long time (mileage is no more than 500 km.)
*3: It is normal that the idle switch turns from ON to OFF when accelerator pedal position sensor (1st channel) voltage increases by 200 - 600 mV from the idling position. Moreover, adjust the idle switch and accelerator pedal position sesor if the idle switch keeps turning after the accelerator pedal is depressed.

| Item No. | Inspection item | Inspection contents | | Normal condition | Inspection procedure No. | Reference page |
|---|---|---|---|---|---|---|
| 11 | Oxygen sensor | Engine: After having warmed up (Air/fuel mixture is made leaner when decelerating, and is made richer when racing.) | When at 4,000 r/min, engine is decelerated | 200 mV or less | Code No. 11 | 13A-131 |
| | | | Race the engine suddenly. | 600 - 1,000 mV | | |
| | | Engine: After having warmed up (The oxygen sensor signal is used to check the air/fuel mixture ratio, and control condition by the engine-A/T-ECU.) | Idling (after six minutes) | 400 mV or less 600 - 1,000 mV (changes) | | |
| | | | 2,500 r/min | | | |
| 12 | Air flow sensor | • Engine coolant temperature: 80 - 95°C<br>• Lamps and all accessories: OFF<br>• Transmission: P range | Idling | 22 - 48 Hz | Code No. 12 | 13A-133 |
| | | | 2,500 r/min | 60 - 100 Hz | | |
| | | | Racing | Frequency increases in response to racing | | |
| 13 | Intake air temperature sensor | Ignition switch: ON or with engine running | When intake air temperature is -20°C | -20°C | Code No. 13 | 13A-135 |
| | | | When intake air temperature is 0°C | 0°C | | |
| | | | When intake air is 20°C | 20°C | | |
| | | | When intake air is 40°C | 40°C | | |

Purchased from www.WorkshopManuals.co.uk

www.WorkshopManuals.co.uk

| Item No. | Inspection item | Inspection contents | | Normal condition | Inspection procedure No. | Reference page |
|---|---|---|---|---|---|---|
| 14 | Throttle position sensor (2nd channel) | • Engine: After having warmed up<br>• Ignition switch: ON (Engine: Stopped) | Release the accelerator pedal. | 4,000 mV or more | Code No. 14 | 13A-137 |
| | | | Depress the accelerator pedal gradually. | Voltage decreases in response to the pedal depression. | | |
| | | | Depress the accelerator pedal fully. | 400 - 600 mV | | |
| 16 | System voltage | Ignition switch: ON | | System voltage | Procedure No. 25 | 13A-190 |
| 18 | Cranking signal (ignition switch: ST) | Ignition switch: ON | Engine: Stopped | OFF | Procedure No.27 | 13A-191 |
| | | | Engine: Cranking | ON | | |
| 21 | Engine coolant temperature sensor | Ignition switch: ON or with engine running | When engine coolant temperature is -20°C | -20°C | Code No. 21 | 13A-138 |
| | | | When engine coolant temperature is 0°C | 0°C | | |
| | | | When engine coolant temperature is 20°C | 20°C | | |
| | | | When engine coolant temperature is 40°C | 40°C | | |
| 22 | Crank angle sensor | • Engine: Cranking<br>• Tachometer: Connected | Compare the tachometer with the MUT-II reading. | Identical | Code No. 22 | 13A-140 |
| | | • Engine: Idling<br>• Idle position switch: ON<br>• Within six minutes after engine starting (Only when engine coolant temperature is 80°C) | When engine coolant temperature is -20°C | 1,250 - 1,450 r/min | | |
| | | | When engine coolant temperature is 0°C | 1,100 - 1,300 r/min | | |
| | | | When engine coolant temperature is 20°C | 1,000 - 1,200 r/min | | |
| | | | When engine coolant temperature is 40°C | 900 - 1,100 r/min | | |
| | | | When engine coolant temperature is 80°C | 550 - 650 r/min | | |

Purchased from www.WorkshopManuals.co.uk

www.WorkshopManuals.co.uk

| Item No. | Inspection item | Inspection contents | | Normal condition | Inspection procedure No. | Reference page |
|---|---|---|---|---|---|---|
| 25 | Barometric pressure sensor | Ignition switch: ON | At altitude of 0 m | 101 kPa | Code No. 25 | 13A-145 |
| | | | At altitude of 600 m | 95 kPa | | |
| | | | At altitude of 1,200 m | 88 kPa | | |
| | | | At altitude of 1,800 m | 81 kPa | | |
| 26 | Accelerator pedal position switch | Ignition switch: ON (Depress and release the accelerator pedal several times) | Release the accelerator pedal. | ON | Procedure No.28 | 13A-192 |
| | | | Depress the accelerator pedal slightly. | OFF | | |
| 27 | Power steering fluid pressure switch | Engine: Idling | When steering wheel is turned | ON | Procedure No.30 | 13A-194 |
| 28 | A/C switch | Engine: Idling (The A/C compressor is running when the A/C switch is on.) | A/C switch: OFF | OFF | Procedure No.31 | 13A-194 |
| | | | A/C switch: ON | ON | | |
| 31 | Small lamp switch | Engine: Idling | Lighting switch: OFF | OFF | Procedure No.33 | 13A-195 |
| | | | Lighting switch: ON | ON | | |
| 34 | Air flow sensor reset signal | Engine: After having warmed up | Idling | ON | Code No. 12 | 13A-133 |
| | | | 3,000 r/min | OFF | | |
| 37 | Volumetric efficiency | • Engine coolant temperature: 85 - 95°C<br>• Lamps and all accessories: OFF<br>• Transmission: P range | Idling | 20 - 40% | - | - |
| | | | 2,500 r/min | 10 - 30% | | |
| | | | Engine is suddenly raced | Volumetric efficiency increases in response to racing | | |
| 38 | Crank angle sensor | • Engine: Cranking (reading is possible at 2,000 r/min or less)<br>• Tachometer: Connected | | Engine speeds displayed on the MUT-II and tachometer are identical. | - | - |

Purchased from www.WorkshopManuals.co.uk

www.WorkshopManuals.co.uk

| Item No. | Inspection item | Inspection contents | | Normal condition | Inspection procedure No. | Reference page |
|---|---|---|---|---|---|---|
| 41 | Injector drive time*1 | • Engine: Cranking | When engine coolant temperature is 0°C | 120 - 160 ms | Code No. 41 | 13A-147 |
| | | | When engine coolant temperature is 20°C | 70 - 90 ms | | |
| | | | When engine coolant temperature is 80°C | 20 - 35 ms | | |
| | Injector drive time*2 | • Engine coolant temperature: 85 - 95°C<br>• Lamps and all accessories: OFF<br>• Transmission: P range<br>• Within six minutes after engine starting | Idling | 0.3 - 0.8 ms | | |
| | | | 2,500 r/min | 0.4 - 1.0 ms | | |
| | | | When engine is suddenly raced | Increases | | |
| 44 | Ignition advance value | • Engine: After having warmed up<br>• Timing lamp is set. (The timing lamp is set in order to check actual ignition timing.)<br>• Within six minutes after engine starting | Idling | 12 - 28° BTDC | Code No. 44 | 13A-148 |
| | | | 2,500 r/min | 15 - 35° BTDC | | |
| 49 | A/C relay | Engine: After having warmed up, idling | A/C switch: OFF | OFF (compressor clutch is not operating) | Procedure No.31 | 13A-194 |
| | | | A/C switch: ON | ON (compressor clutch is operating) | | |
| 67 | Stop lamp switch | Ignition switch: ON | Brake pedal: Depressed | OFF | Procedure No.32 | 13A-195 |
| | | | Brake pedal: Released | ON | | |
| 68 | EGR valve | • Engine coolant temperature: 85 - 95°C<br>• Lamps and all accessories: OFF<br>• Transmission: P range | Idling | 2 - 20 STEP | Procedure No.35 | 13A-196 |
| | | | 2,500 r/min | 0 - 10 STEP | | |
| 74 | Fuel pressure sensor | • Engine coolant temperature: 85 - 95°C<br>• Lamps and all accessories: OFF<br>• Transmission: P range | Engine: Cranking | 2 MPa or more | Code No. 56 | 13A-151 |
| | | | Engine: Idling | 4.0 - 6.9 MPa | | |

Purchased from www.WorkshopManuals.co.uk

www.WorkshopManuals.co.uk

| Item No. | Inspection item | Inspection contents | | Normal condition | Inspection procedure No. | Reference page |
|---|---|---|---|---|---|---|
| 77 | Accelerator pedal position sensor (2nd channel) | Ignition switch: ON | Release the accelerator pedal. | 985 - 1,085 mV | Code No. 77 | 13A-154 |
| | | | Depress the accelerator pedal gradually. | Increases in response to the pedal depression stroke. | | |
| | | | Depress the accelerator pedal fully. | 4,000 mV or more | | |
| 78 | Accelerator pedal position sensor (1st channel) | Ignition switch: ON | Release the accelerator pedal. | 985 - 1085 mV | Code No. 78 | 13A-156 |
| | | | Depress the accelerator pedal gradually. | Increases in response to the pedal depression stroke. | | |
| | | | Depress the accelerator pedal fully. | 4,000 mV or more | | |
| 79 | Throttle position sensor (1st channel) | • Engine: After having warmed up<br>• Ignition switch: ON (Engine stopped) | Release the accelerator pedal. | 400 - 800 mV | Code No. 79 | 13A-158 |
| | | | Depress the accelerator pedal gradually. | Increases in response to the pedal depression stroke. | | |
| | | | Depress the accelerator pedal fully. | 4,200 - 4,800 mV | | |
| | | Engine: Idling after warming-up | No load | 450 - 1,000 mV | | |
| | | | A/C switch: OFF to ON | Increases by 100 - 600 mV | | |
| | | | Transmission: P to D range | Increases by 0 - 200 mV. | | |
| 99 | Combustion mode | Engine: After having warmed up | Idling (several minutes after starting) | Compression lean | - | - |
| | | | 2,500 r/min | Stoichiometric feedback | | |
| | | | Race the engine suddenly while the engine is idling. | Open loop | | |

Purchased from www.WorkshopManuals.co.uk

www.WorkshopManuals.co.uk

## ACTUATOR TEST REFERENCE TABLE

| Item No. | Inspection item | Drive Contents | Inspection contents | | Normal condition | Inspection procedure No. | Reference page |
|---|---|---|---|---|---|---|---|
| 01 | Injector | Cut fuel to the No.1 injector. | Engine:<br>Idling after warming-up<br>(Cut the fuel supply to each injector in turn and check cylinders which does not affect idling.) | | Idling condition becomes different (becomes unstable, or the engine stalls). | Code No. 41 | 13A-147 |
| 02 | | Cut fuel to the No.2 injector. | | | | | |
| 03 | | Cut fuel to the No.3 injector. | | | | | |
| 04 | | Cut fuel to the No.4 injector. | | | | | |
| 05 | | Cut fuel to the No.5 injector. | | | | | |
| 06 | | Cut fuel to the No.6 injector. | | | | | |
| 07 | Fuel pump (low-pressure) | Operates the fuel pump (low-pressure) to circulate fuel. | Ignition switch: ON | Pinch the return hose with fingers to feel the pulse of the fuel being circulated. | Pulse is felt. | Procedure No.29 | 13A-193 |
| | | | | Operating sound can be heard around the fuel tank. | Sound of operation can be heard | | |
| 08 | Purge control solenoid valve | Solenoid valve turns from OFF to ON. | Ignition switch: ON | | Sound of operation can be heard when solenoid valve is driven. | Procedure No.36 | 13A-197 |
| 17 | Basic ignition timing | Solenoid valve turns from OFF to ON. | ● Engine: Idling<br>● Set a timing light. | | 5° BTDC | - | - |
| 21 | Condenser fan | Drive the fan motor | ● Ignition switch: ON<br>● A/C switch: ON | | Fan motor runs | Procedure No.21 | 13A-187 |
| 34 | Electronic-controlled throttle valve system | Stop the throttle control servo | Ignition switch: ON | | The throttle valve opens slightly | Code No. 91 | 13A-161 |

Purchased from www.WorkshopManuals.co.uk

www.WorkshopManuals.co.uk

## CHECK AT THE ENGINE-ECU TERMINALS

### TERMINAL VOLTAGE CHECK CHART

**Engine-A/T-ECU Connector Terminal Arrangement**

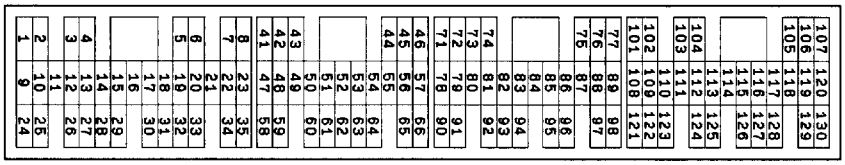


7FU1763

| Terminal No. | Check item | Check condition (Engine condition) | Normal condition |
|---|---|---|---|
| 1 | No.1 injector | While engine is idling after having warmed up, suddenly depress the accelerator pedal. | From 9 - 13 V, momentarily drops slightly |
| 9 | No.2 injector | | |
| 24 | No.3 injector | | |
| 2 | No.4 injector | | |
| 10 | No.5 injector | | |
| 25 | No.6 injector | | |
| 3 | Oxygen sensor heater | Engine: Idling | 0 - 3 V |
| | | Engine: 5,000 r/min | System voltage |
| 6 | Injector driver relay | Ignition switch: OFF | 0 - 0.1 V |
| | | Ignition switch: ON | 0.5 - 1.0 V |
| 8 | Alternator G terminal | • Engine: Idling after warming-up<br>• Radiator fan: Not operating<br>• Headlamp: off to on<br>• Stop lamp: off to on<br>• Defogger switch: OFF to ON | The voltage increases by 0.2 - 3.5 V |
| 54 | Alternator FR terminal | • Engine: Idling after warming-up<br>• Radiator fan: Not operating<br>• Headlamp: off to on<br>• Stop lamp: off to on<br>• Defogger switch: OFF to ON | The voltage drops |
| 11 | No.1 ignition coil | Engine speed: 3,000 r/min | 0.3 - 3.0 V |
| 31 | No.2 ignition coil | | |
| 13 | No.3 ignition coil | | |
| 30 | No.4 ignition coil | | |
| 12 | No.5 ignition coil | | |
| 32 | No.6 ignition coil | | |
| 14 | Throttle control servo relay | Ignition switch: OFF | 0 - 0.1 V |
| | | Ignition switch: ON | 0.5 - 1.0 V |

Purchased from www.WorkshopManuals.co.uk

www.WorkshopManuals.co.uk

| Terminal No. | Check item | Check condition (Engine condition) | | Normal condition |
|---|---|---|---|---|
| 18 | Condenser fan relay | Condenser fan not operating | | System voltage |
| | | Condenser fan operating | | 0 - 3 V or more |
| 19 | Air flow sensor reset signal | Engine: Idling | | 0 - 1 V |
| | | Engine speed: 3,000 r/min | | 6 - 9 V |
| 20 | A/C relay | ● Engine: Idling<br>● A/C switch: OFF to ON (Compressor operating) | | System voltage or changes momentarily 6 V or more to 0 - 3 V |
| 21 | Fuel pump relay | Ignition switch: ON | | System voltage |
| | | Engine: Idling | | 0 - 3 V |
| 22 | Engine warning lamp | Ignition switch: OFF to ON | | System voltage |
| 23 | GDI ECO indication lamp | Ignition switch: OFF to ON | | 0 - 3 V (system voltage after five seconds) |
| | | Rev the engine suddenly. | | System voltage |
| 34 | Purge control solenoid valve | ● Engine coolant temperature: 80 - 95 °C<br>● Ignition switch: ON | Engine: stopped | System voltage |
| | | | Engine: After starting, increase the engine speed up to 3,500 r/min | The voltage drops |
| 41 | Power supply | Ignition switch: ON | | System voltage |
| 47 | | | | |
| 43 | Engine ignition signal | Engine speed: 3,000 r/min | | 0.3 - 3.0 V |
| 44 | Engine coolant temperature sensor | Ignition switch: ON | When engine coolant temperature is 0°C | 3.2 - 3.8 V |
| | | | When engine coolant temperature is 20°C | 2.3 - 2.9 V |
| | | | When engine coolant temperature is 40°C | 1.3 - 1.9 V |
| | | | When engine coolant temperature is 80°C | 0.3 - 0.9 V |
| 45 | Crank angle sensor | Engine: Cranking | | 0.4 - 4.0 V |
| | | Engine: Idling | | 1.5 - 2.5 V |
| 46 | Power supply voltage applied to accelerator pedal position sensor (1st channel) | Ignition switch: ON | | 4.5 - 5.5 V |

Purchased from www.WorkshopManuals.co.uk

www.WorkshopManuals.co.uk

| Terminal No. | Check item | Check condition (Engine condition) | | Normal condition |
|---|---|---|---|---|
| 49 | Engine control relay | Ignition switch: OFF | | 0 - 3 V |
| | | Ignition switch: ON | | System voltage |
| 51 | EGR valve (A) | Ignition switch: OFF to ON | | 5 - 8 V (Repeatedly changes for approx. 3 seconds) |
| 53 | EGR valve (C) | | | |
| 60 | EGR valve (B) | | | |
| 62 | EGR valve (C) | | | |
| 52 | Power steering fluid pressure switch | Engine: Idling after warming-up | When steering wheel is stationary | System voltage |
| | | | When steering wheel is turned | 0 - 3 V |
| 55 | Barometric pressure sensor | Ignition switch: ON | At an altitude of 0 m | 3.7 - 4.3 V |
| | | | At an altitude of 1,200 m | 3.2 - 3.8 V |
| 56 | Camshaft position sensor | Engine: Cranking | | 0.4 - 3.0 V |
| | | Engine: Idling | | 0.5 - 2.0 V |
| 58 | Ignition switch-ST | Engine: Cranking | | 8 V or more |
| 61 | A/C switch 2 | Refer to GROUP 55 - Troubleshooting (Check at A/C-ECU or Engine-ECU Terminal). | | |
| 63 | Injector open circuit check signal | Engine: Increases from idling up to 4,000 r/min | | The voltage decreases slightly (approx. 0.7 V) from 4.5 - 5.0 V. |
| 64 | Intake air temperature sensor | Ignition switch: ON | When intake air temperature is 0°C | 3.2 - 3.8 V |
| | | | When intake air temperature is 20°C | 2.3 - 2.9 V |
| | | | When intake air temperature is 40°C | 1.5 - 2.1 V |
| | | | When intake air temperature is 80°C | 0.4 - 1.0 V |
| 65 | Air flow sensor | Engine: Idling | | 2.2 - 3.2 V |
| | | Engine speed: 2,500 r/min | | |
| 66 | Backup power supply | Ignition switch: OFF | | System voltage |
| 71 | Oxygen sensor | Engine: Running at 2,500 r/min after warming-up (Check by using a digital voltmeter.) | | Voltages of 0 V and 0.8 V alternate |

Purchased from www.WorkshopManuals.co.uk

www.WorkshopManuals.co.uk

| Terminal No. | Check item | Check condition (Engine condition) | | Normal condition |
|---|---|---|---|---|
| 78 | Throttle position sensor (2nd channel) | Ignition switch: ON | Release the accelerator pedal. | 4.0 V or higher |
| | | | Depress the accelerator pedal fully. | 0.4 - 0.6 V |
| 79 | Accelerator pedal position switch | Ignition switch: ON | Release the accelerator pedal. | 0 - 1 V |
| | | | Depress the accelerator pedal slightly. | 4 V or more |
| 80 | Vehicle speed sensor | ● Ignition switch: ON<br>● Move the vehicle slowly forward | | Voltages of 0 and 8 - 12 V alternate (changes repeatedly) |
| 83 | A/C switch 1 | Engine: Idling | A/C switch: OFF | 0 - 3 V |
| | | | A/C switch: ON (Compressor is operating) | System voltage |
| 86 | Small lamp switch | Lighting switch: OFF | | 0 - 3 V |
| | | Lighting switch: Tail light position | | System voltage |
| 87 | Sensor applied voltage | Ignition switch: ON | | 4.5 - 5.5 V |
| 93 | Fuel pressure sensor | Engine: Idling | | 0.3 - 4.7 V |
| 95 | Accelerator pedal position sensor (1st channel) | Ignition switch: ON | Release the accelerator pedal. | 0.985 - 1.085 V |
| | | | Depress the accelerator pedal fully. | 4.0 V or higher |
| 98 | Ignition switch-IG | Ignition switch: ON | | System voltage |
| 123 | Stop lamp switch | Depress the brake pedal. | | System voltage |
| | | Release the brake pedal. | | 0 - 3 V |

Purchased from www.WorkshopManuals.co.uk

www.WorkshopManuals.co.uk

**CHECK CHART FOR RESISTANCE AND CONTINUITY BETWEEN TERMINALS**

1. Turn the ignition switch to OFF.
2. Disconnect the engine-A/T-ECU connector.
3. Measure the resistance and check for continuity between the terminals of the engine-A/T-ECU harness-side connector while referring to the check chart.

   NOTE
   (1) When measuring resistance and checking continuity, a harness for checking contact pin pressure should be used instead of inserting a test probe.
   (2) Checking need not be carried out in the order given in the chart.

   **Caution**
   **If the terminals that should be checked are mistaken, or if connector terminals are not correctly shorted to earth, damage may be caused to the vehicle wiring, sensors, engine-A/T-ECU and/or ohmmeter.**
   **Be careful to prevent this!**

4. If the ohmmeter shows any deviation from the standard value, check the corresponding sensor, actuator and related electrical wiring, and then repair or replace.
5. After repair or replacement, recheck with the ohmmeter to confirm that the repair or replacement has corrected the problem.

Purchased from www.WorkshopManuals.co.uk

www.WorkshopManuals.co.uk

**Engine-A/T-ECU Harness Side Connector Terminal Arrangement**

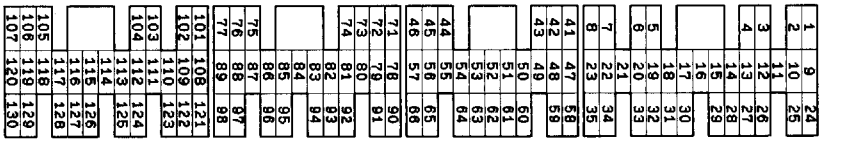


7FU1764

| Terminal No. | Check item | Standard value, normal condition (check conditions) |
|---|---|---|
| 3-41 | Oxygen sensor heater | 4.5 - 8.0 Ω (at 20°C) |
| 34-41 | Purge control solenoid valve | 28 - 36 Ω (at 20°C) |
| 42-body earth | Earth | Continuity (0 Ω) |
| 48-body earth | | |
| 51-41 | EGR valve (A) | 15 - 20 Ω (at 20°C) |
| 53-41 | EGR valve (C) | |
| 60-41 | EGR valve (B) | |
| 62-41 | EGR valve (D) | |
| 44-81 | Engine coolant temperature sensor | 5.1 - 6.5 kΩ (When coolant temperature is 0°C) |
| | | 2.1 - 2.7 kΩ (When coolant temperature is 20°C) |
| | | 0.9 - 1.3 kΩ (When coolant temperature is 40°C) |
| | | 0.26 - 0.36 kΩ (When coolant temperature is 80°C) |
| 64-81 | Intake air temperature sensor | 5.3 - 6.7 kΩ (When intake air temperature is 0°C) |
| | | 2.3 - 3.0 kΩ (When intake air temperature is 20°C) |
| | | 1.0 - 1.5 kΩ (When intake air temperature is 40°C) |
| | | 0.30 - 0.42 kΩ (When intake air temperature is 80°C) |
| 79-81 | Accelerator pedal position switch | Continuity (when the accelerator pedal is released) |
| | | No continuity (when the accelerator pedal is depressed slightly) |

Purchased from www.WorkshopManuals.co.uk

www.WorkshopManuals.co.uk

## CHECK AT THROTTLE VALVE CONTROLLER TERMINALS

### TERMINAL VOLTAGE CHECK CHART

**Throttle Valve Controller Terminal Arrangement**

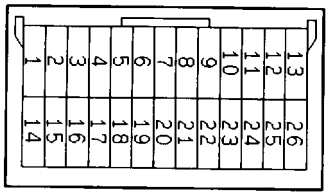


7FU2290

| Terminal No. | Check item | Check condition (Engine condition) | | Normal condition |
|---|---|---|---|---|
| 1 | Throttle control servo (U) | ● Ignition switch: ON<br>● Accelerator pedal: From released position to fully depressed position | | Changes |
| 14 | Throttle control servo (V) | | | |
| 15 | Throttle control servo (W) | | | |
| 2 | Throttle control servo power supply | Ignition switch: ON | | System voltage |
| 5 | Power supply | Ignition switch: ON | | System voltage |
| 6 | Sensor applied voltage | Ignition switch: ON | | 4.5 - 5.5 V |
| 7 | Throttle position sensor (1st channel) | Ignition switch: ON | Release the accelerator pedal. | 0.4 - 0.8 V |
| | | | Depress the accelerator pedal fully. | 4.2 - 4.8 V |
| 18 | Backup power supply | Ignition switch: OFF | | System voltage |
| 20 | Accelerator pedal position sensor (2nd channel) | Ignition switch: ON | Release the accelerator pedal. | 0.985 - 1.085 V |
| | | | Depress the accelerator pedal fully. | 4.0 V or higher |
| 22 | Ignition switch-IG | Ignition switch: ON | | System voltage |

Purchased from www.WorkshopManuals.co.uk

www.WorkshopManuals.co.uk

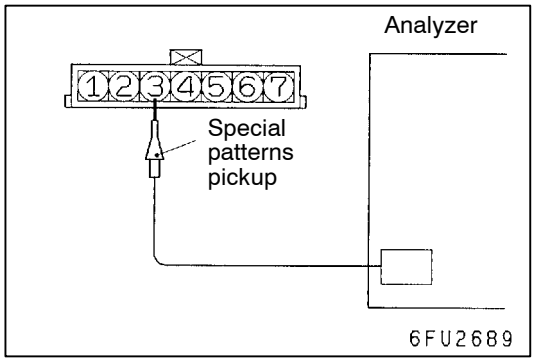


## INSPECTION PROCEDURE USING AN ANALYZER

### AIR FLOW SENSOR (AFS)

**Measurement Method**

1. Disconnect the air flow sensor connector, and connect the special tool (test harness: MB991709) in between. (All terminals should be connected.)
2. Connect the analyzer special patterns pickup to air flow sensor connector terminal 3.

**Alternate Method (Test harness not available)**

1. Connect the analyzer special patterns pickup to engine-A/T-ECU terminal 65.

**Standard Wave Pattern**

**Observation conditions**

| | |
|---|---|
| Function | Special patterns |
| Pattern height | Low |
| Pattern selector | Display |
| Engine r/min | Idle speed |

**Standard wave pattern**

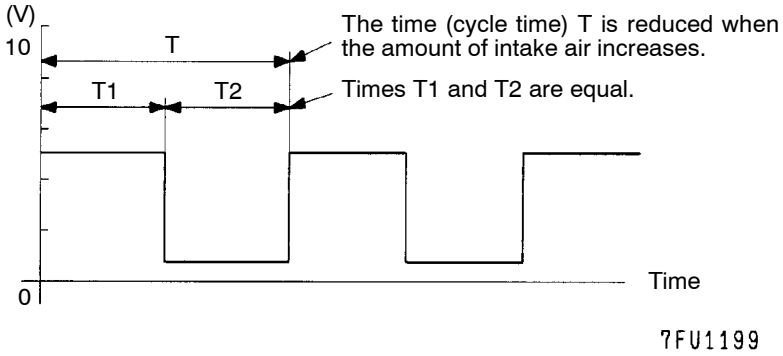


**Observation conditions (from conditions above engine speed is increased by racing.)**

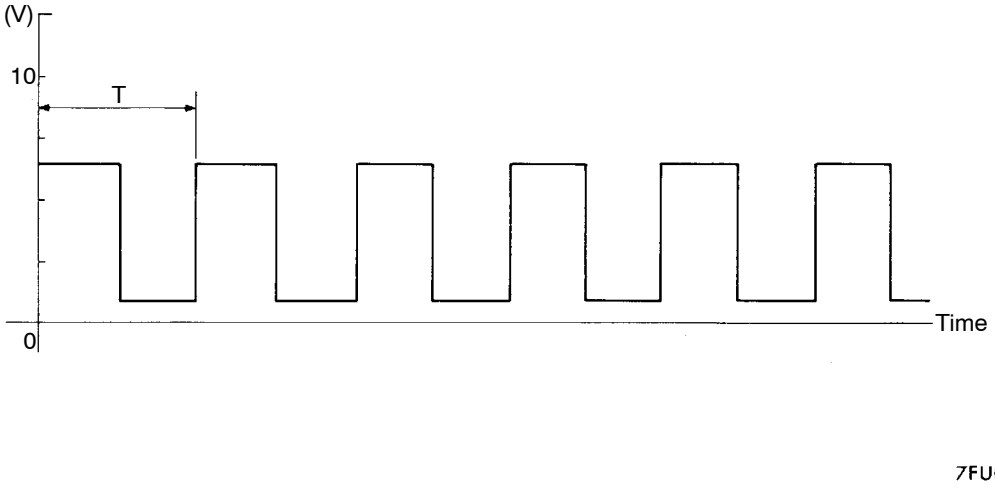


**Wave Pattern Observation Points**

Check that cycle time T becomes shorter and the frequency increases when the engine speed is increased.

Purchased from www.WorkshopManuals.co.uk

www.WorkshopManuals.co.uk

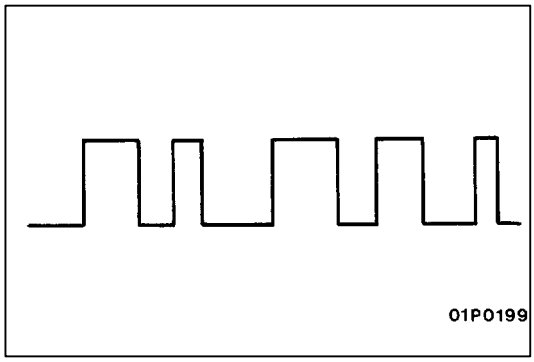


**Examples of Abnormal Wave Patterns**

- Example 1

  **Cause of problem**

  Sensor interface malfunction

  **Wave pattern characteristics**

  Rectangular wave pattern is output even when the engine is not started.

- Example 2

  **Cause of problem**

  Damaged rectifier or vortex generation column

  **Wave pattern characteristics**

  Unstable wave pattern with non-uniform frequency. However, when an ignition leak occurs during acceleration, the wave pattern will be distorted temporarily, even if the air flow sensor is normal.

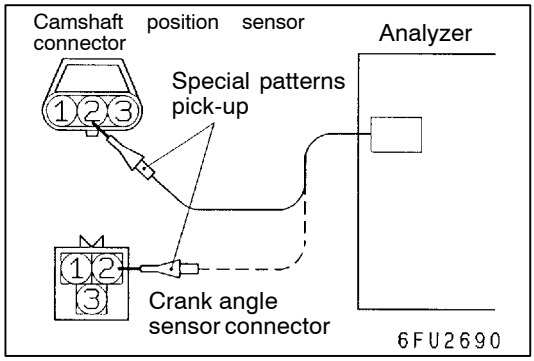


**CAMSHAFT POSITION SENSOR AND CRANK ANGLE SENSOR**

**Measurement Method**

1. Disconnect the camshaft position sensor connector and connect the special tool (test harness: MB991709) in between. (All terminals should be connected.)
2. Connect the analyzer special patterns pickup to camshaft position sensor terminal 2.
3. Disconnect the crank angle sensor connector and connect the special tool (test harness: MD998478) in between.
4. Connect the analyzer special patterns pickup to crank angle sensor terminal 2.

**Alternate Method (Test harness not available)**

1. Connect the analyzer special patterns pickup to engine-A/T-ECU terminal 56. (When checking the camshaft position sensor signal wave pattern.)
2. Connect the analyzer special patterns pickup to engine-A/T-ECU terminal 45. (When checking the crank angle sensor signal wave pattern.)

**Standard Wave Pattern**

**Observation conditions**

| | |
|---|---|
| Function | Special patterns |
| Pattern height | Low |
| Pattern selector | Display |
| Engine r/min | Idle speed |

Purchased from www.WorkshopManuals.co.uk

www.WorkshopManuals.co.uk

**Standard wave pattern**

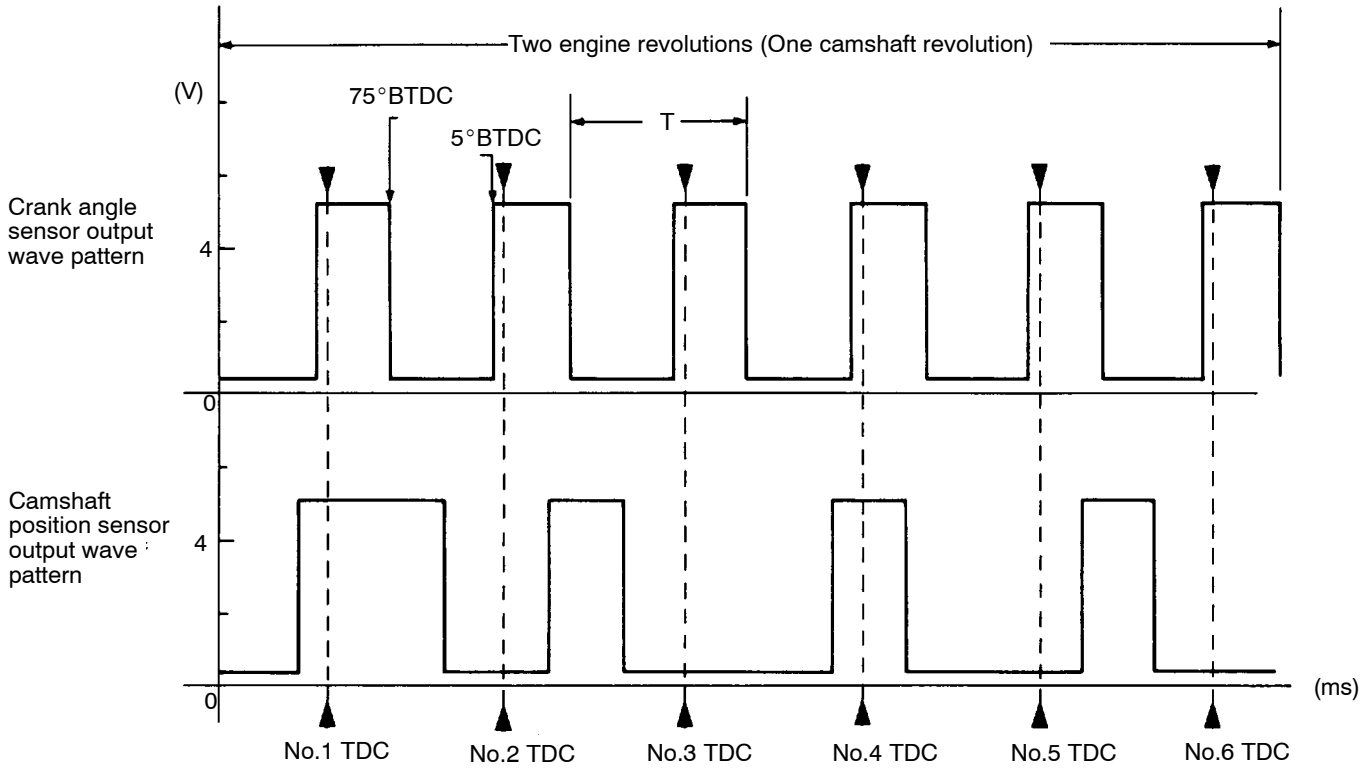


7FU0887

**Wave Pattern Observation Points**

Check that cycle time T becomes shorter when the engine speed increases.

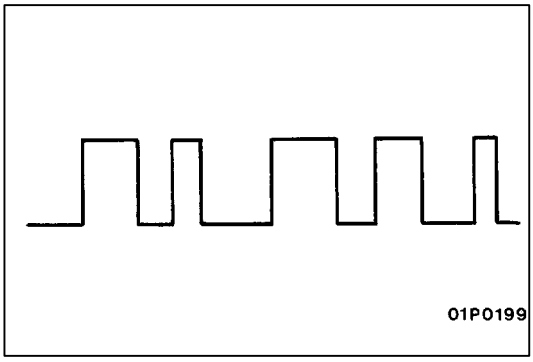

01P0199

**Examples of Abnormal Wave Patterns**

- Example 1

  **Cause of problem**

  Sensor interface malfunction

  **Wave pattern characteristics**

  Rectangular wave pattern is output even when the engine is not started.

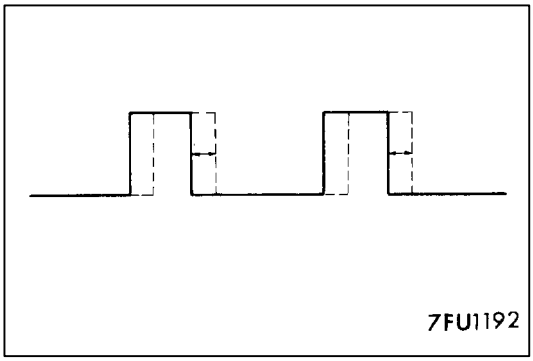

7FU1192

- Example 2

  **Cause of problem**

  Loose timing belt
  Abnormality in sensor disk

  **Wave pattern characteristics**

  Wave pattern is displaced to the left or right.

Purchased from www.WorkshopManuals.co.uk

www.WorkshopManuals.co.uk

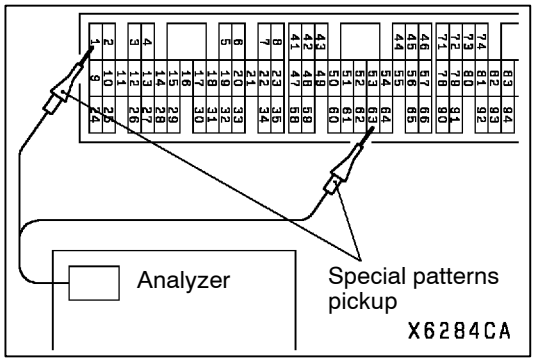


## INJECTORS AND INJECTOR OPEN CIRCUIT CHECK SIGNAL

### Measurement Method

1. Connect the analyzer special patterns pickup to terminal 1 (No.1 injector) of the engine-A/T-ECU connector.
2. Connect the analyzer special patterns pickup to terminal 63 (injector open circuit check signal) of the engine-ECU connector.
3. After checking terminal 1, check terminal 9 (No.2 injector), terminal 24 (No.3 injector), terminal 2 (No.4 injector), terminal 10 (No.5 injector) and terminal 25 (No.6 injector).

### Standard Wave Pattern

### Observation conditions

| | |
|---|---|
| Function | Special pattern |
| Pattern height | Low |
| Pattern selector | Display |
| Engine r/min | Idle speed |

### Standard wave pattern

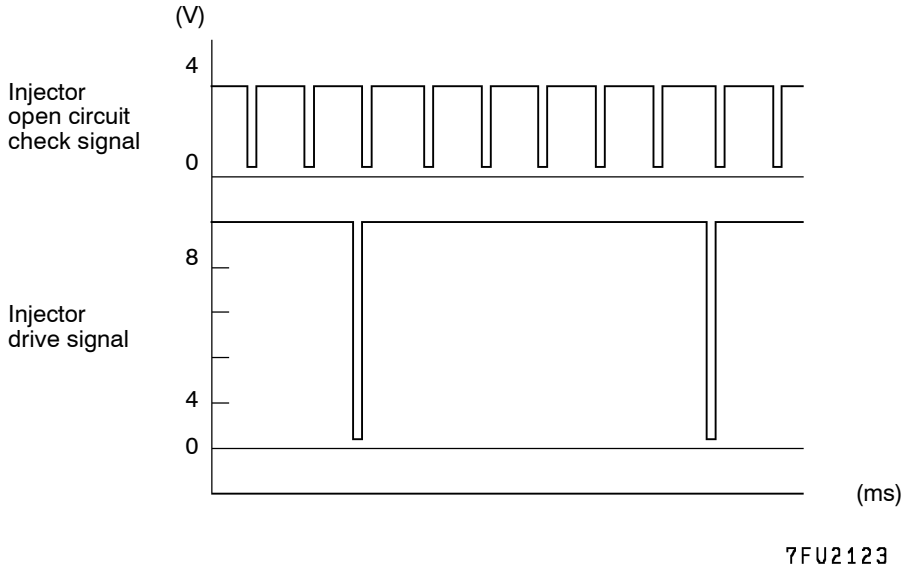


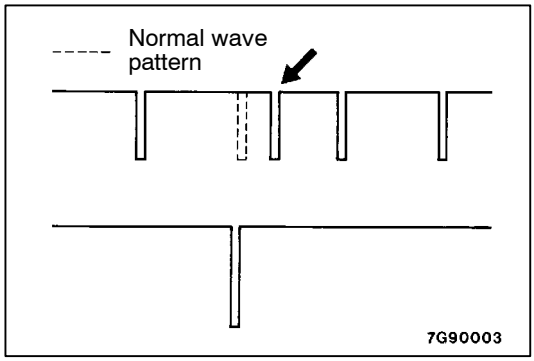


### Wave Pattern Observation Points

- Check that the injector drive time is identical to the time displayed on the MUT-II.
- Check that the injector signals become greatly extended but soon return to their normal wave length when the engine is suddenly raced.
- Check that the injector open circuit check signal is synchronized with each rising portion of the injector drive signal.

Purchased from www.WorkshopManuals.co.uk

www.WorkshopManuals.co.uk

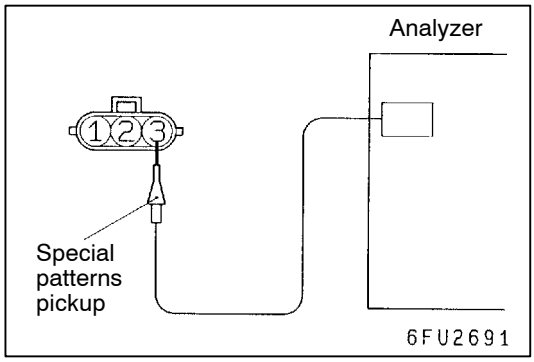


## IGNITION COIL AND POWER TRANSISTOR

Power transistor control signal

### Measurement Method

1. Disconnect the ignition coil connector, and connect the special tool (test harness: MB991658) in between. (All terminals should be connected.)
2. Connect the analyzer special patterns pickup to terminal 3 of each ignition coil connector in turn.

### Alternate Method (Test harness not available)

1. Connect the analyzer special patterns pickup to engine-A/T-ECU terminal 11 (No. 1 ignition coil), terminal 31 (No. 2 ignition coil), terminal 13 (No. 3 ignition coil), terminal 30 (No. 4 ignition coil), terminal 12 (No.5 ignition coil) and terminal 32 (No.6 ignition coil) respectively.

### Standard Wave Pattern

### Observation condition

| | |
|---|---|
| Function | Special patterns |
| Pattern height | Low |
| Pattern selector | Display |
| Engine r/min | Approx. 1,200 r/min |

### Standard wave pattern

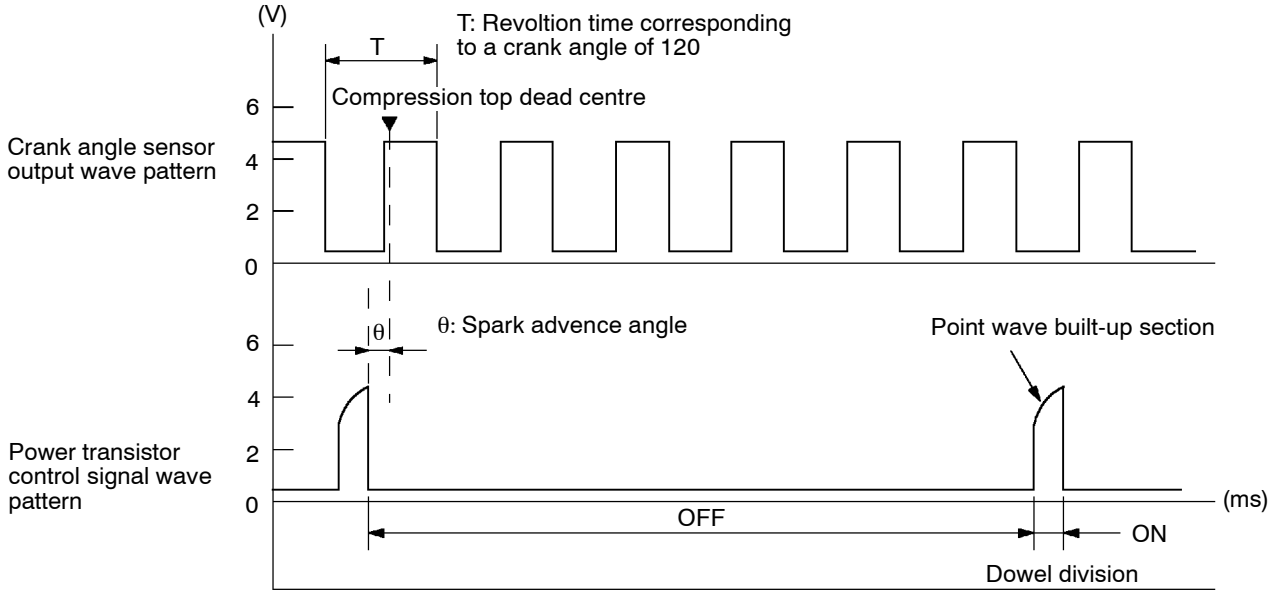


Y6007CA

Purchased from www.WorkshopManuals.co.uk

www.WorkshopManuals.co.uk

**Wave Pattern Observation Points**

Point: Condition of wave pattern build-up section and maximum voltage (Refer to abnormal wave pattern examples 1 and 2.)

| Condition of wave pattern build-up section and maximum voltage | Probable cause |
|---|---|
| Rises from approx. 2V to approx. 4.5V at the top-right | Normal |
| 2V rectangular wave | Open-circuit in ignition primary circuit |
| Rectangular wave at power voltage | Power transistor malfunction |

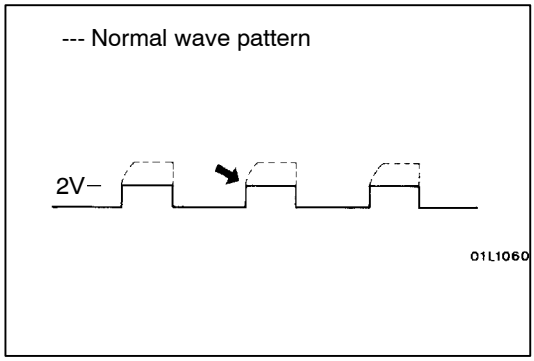


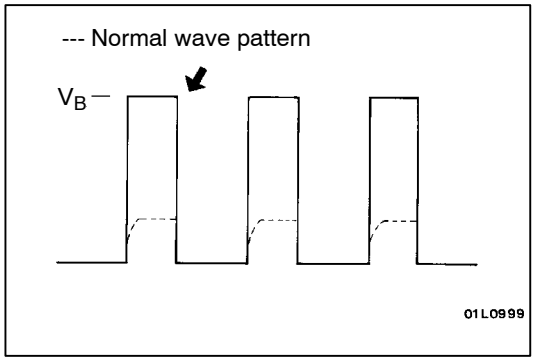


**Examples of Abnormal Wave Patterns**

- Example 1

  Wave pattern during engine cranking

  **Cause of problem**

  Open-circuit in ignition primary circuit

  **Wave pattern characteristics**

  Top-right part of the build-up section cannot be seen, and voltage value is approximately 2V too low.

- Example 2

  Wave pattern during engine cranking

  **Cause of problem**

  Malfunction in power transistor

  **Wave pattern characteristics**

  Power voltage results when the power transistor is ON.

Purchased from www.WorkshopManuals.co.uk

www.WorkshopManuals.co.uk

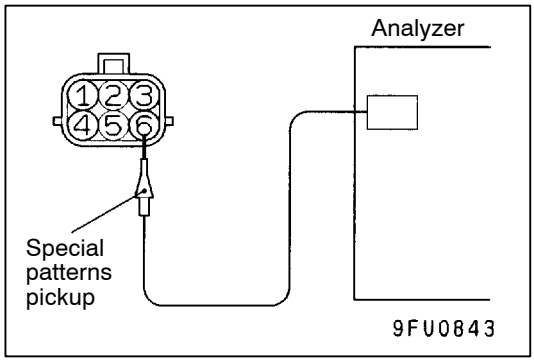


## EGR VALVE (STEPPER MOTOR)

### Measurement Method

1. Disconnect the EGR valve connector, and connect the special tool (test harness: MB991658) in between.
2. Connect the analyzer special patterns pickup to the EGR valve-side connector terminal 1, terminal 3, terminal 4 and terminal 6 respectively.

### Alternate Method (Test harness not available)

1. Connect the analyzer special patterns pickup to engine-A/T-ECU terminal 51, connection terminal 60, connection terminal 53, and connection terminal 62 respectively.

### Standard Wave Pattern

### Observation conditions

| | |
|---|---|
| Function | Special patterns |
| Pattern height | High |
| Pattern selector | Display |
| Engine condition | When the engine coolant temperature is 20°C or below, turn the ignition switch from OFF to ON (without starting the engine). |
| | While the engine is idling, turn the A/C switch to ON. |
| | Immediately after starting the warm engine |

### Standard wave pattern

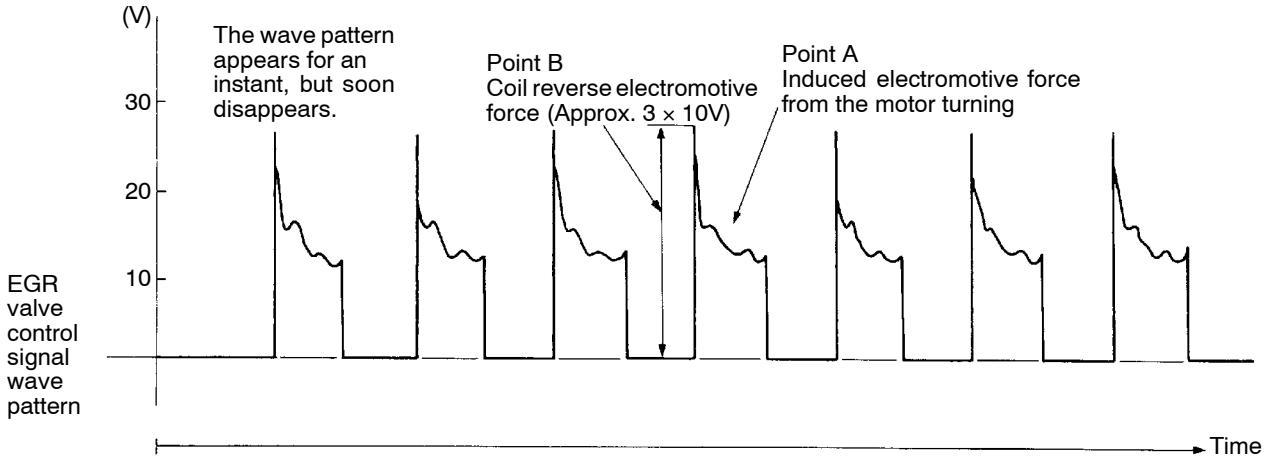


7FU1204

Purchased from www.WorkshopManuals.co.uk

www.WorkshopManuals.co.uk

**Wave Pattern Observation Points**

Check that the standard wave pattern appears when the EGR control servo is operating.
Point A: Presence or absence of induced electromotive force from the motor turning. (Refer to the abnormal wave pattern.)

| Contrast with standard wave pattern | Probable cause |
|---|---|
| Induced electromotive force does not appear or is extremely small. | Motor is malfunctioning |

Point B: Height of coil reverse electromotive force

| Contrast with standard wave pattern | Probable cause |
|---|---|
| Coil reverse electromotive force does not appear or is extremely small. | Short in the coil |

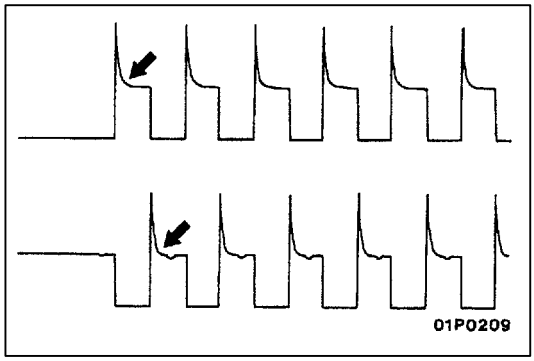


**Examples of Abnormal Wave Pattern**

- Example 1

  **Cause of problem**

  Motor is malfunctioning. (Motor is not operating.)

  **Wave pattern characteristics**

  Induced electromotive force from the motor turning does not appear.

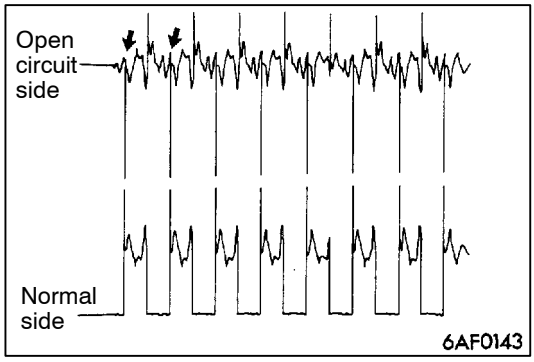


- Example 2

  **Cause of problem**

  Open circuit in the line between the EGR valve and the engine-A/T-ECU

  **Wave pattern characteristics**

  Current is not supplied to the motor coil on the open circuit side. (Voltage does not drop to 0 V.)
  Furthermore, the induced electromotive force waveform at the normal side is slightly different from the normal waveform.

Purchased from www.WorkshopManuals.co.uk

www.WorkshopManuals.co.uk

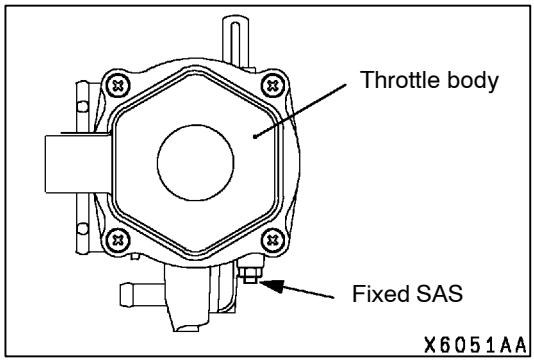


# ON-VEHICLE SERVICE

**Caution**

**(1) Never attempt to tamper the fixed SAS. The fixed SAS is precisely adjusted at factory.**

**(2) Should it be tampered, the full closed position of the throttle valve will be changed. This causes the engine-ECU to learn a wrong position of the throttle valve.**

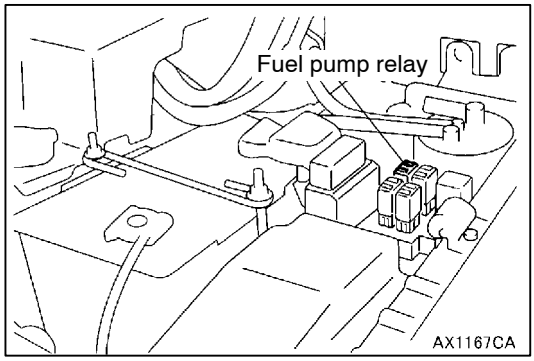


## FUEL PUMP CONNECTOR DISCONNECTION (HOW TO REDUCE FUEL PRESSURE)

When removing the fuel pipe, hose, etc., since fuel pressure in the fuel pipe line is high, do the following operation so as to release fuel pressure in the line and prevent fuel from running out.

1. Remove the fuel filler cap to release pressure in the fuel tank.
2. Remove the fuel pump relay.
3. Connect the MUT-II to the diagnosis connector.

   **Caution**

   **Turn off the ignition switch before disconnecting or connecting the MUT-II.**

4. Turn off the ignition switch.
5. Select “Item No.74” from the MUT-II Data list.
6. Crank the engine for at least two seconds.
7. If the engine is not be started, use the MUT-II to make sure that the fuel pressure is 0.5 MPa or less. Then turn off the ignition switch.
8. If the engine is started, release fuel pressure by the following procedure:
   (1) Turn off the ignition switch, and then stop the engine.
   (2) Disconnect one of the ignition coil connectors.
   (3) Crank the engine for at least two seconds.
   (4) If the engine is not be started, use the MUT-II to make sure that the fuel pressure is 0.5 MPa or less. Then turn off the ignition switch.
   (5) If the engine is started, stop it by racing and use the MUT-II to make sure that the fuel pressure is 0.5 MPa or less. Then turn off the ignition switch.
   (6) Reconnect the ignition coil connector.

   **Caution**

   **Clean the spark plug which corresponds to the disconnected ignition coil connector.**

9. Remove the MUT-II.
10. Install the fuel pump relay.

Purchased from www.WorkshopManuals.co.uk

www.WorkshopManuals.co.uk

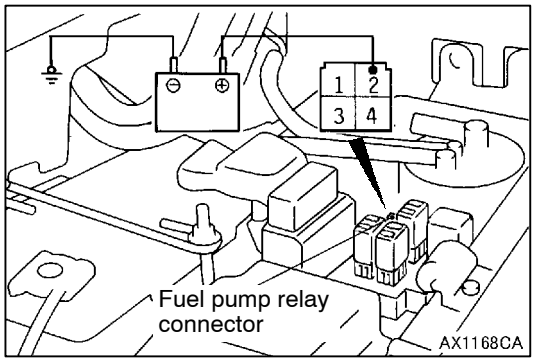


## FUEL PUMP OPERATION (LOW PRESSURE) CHECK

1. Check the operation of the fuel pump by using the MUT-II to force-drive the fuel pump.
2. If the fuel pump will not operate, check by using the following procedure, and if it is normal, check the drive circuit.
   (1) Turn the ignition switch to the LOCK (OFF) position.
   (2) Remove the fuel pump relay. Connect the terminal No.2 of the harness-side connector to the battery. Check if the fuel pump operation sound can be heard at this time.

   NOTE
   As the fuel pump is an in-tank type, the fuel pump sound is hard to hear, so remove the fuel filler cap and check from the tank inlet.

   (3) Check the fuel pressure by pinching the fuel hose with the fingertips.

## THROTTLE BODY (THROTTLE VALVE AREA) CLEANING

1. Start the engine, and warm it up until engine coolant temperature reaches 80°C. Then stop the engine.
2. Remove the air intake hose at the throttle body side.
3. Apply cleaning agent to the throttle valve through the intake port of the throttle valve, and then leave it for approx. five minutes.
4. Start the engine, race it several times, and then let it run at idle for approx. one minute.
5. If carbon deposits are not removed from the throttle vale area, repeat steps (3) and (4).
6. Install the air intake hose.
7. Use the MUT-II or disconnect the negative battery cable from the battery terminal in order to erase a diagnosis code. Wait for at least ten seconds, and then let the engine run at idle again for approx. ten minutes.

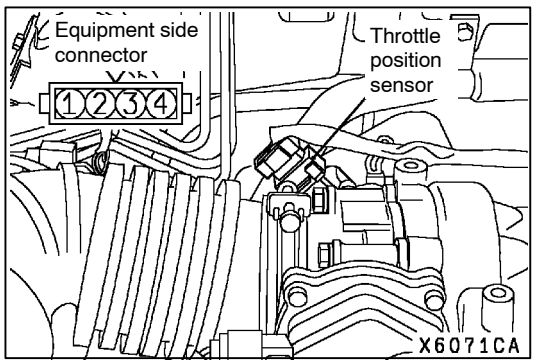


## THROTTLE POSITION SENSOR (TPS) ADJUSTMENT

1. Connect the MUT-II to the diagnosis connector.

Purchased from www.WorkshopManuals.co.uk

www.WorkshopManuals.co.uk

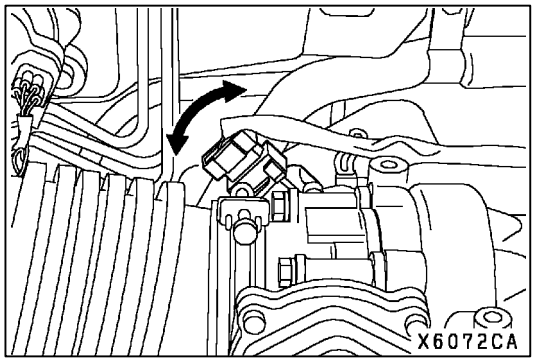


2. Check the output voltage of throttle position sensor (1st channel) while closing the throttle valve fully with your finger.

   **Standard value: 0.4 - 0.6 V**

3. If outside the standard value, loosen the throttle position sensor mounting bolts, and adjust the throttle position sensor by rotating it.
4. Check the output voltage of throttle position sensor (2nd channel) while closing the throttle valve fully with your finger.

   **Standard value: 4.2 - 4.8 V**

5. If outside the standard value, replace the throttle position sensor.
6. Turn the ignition switch to the LOCK (OFF) position.
7. Connect the throttle control servo connector.
8. Remove the MUT-II.
9. If a diagnosis code is set, erase it by using the MUT-II or by disconnecting the negative battery cable for ten seconds or more, reconnecting it.
10. Turn the ignition switch to the ON position, and then return it to the LOCK (OFF) position. Then maintain that condition for ten seconds or more.)
    If the negative battery cable is disconnected at step 11, let the engine run at idle for ten minutes.

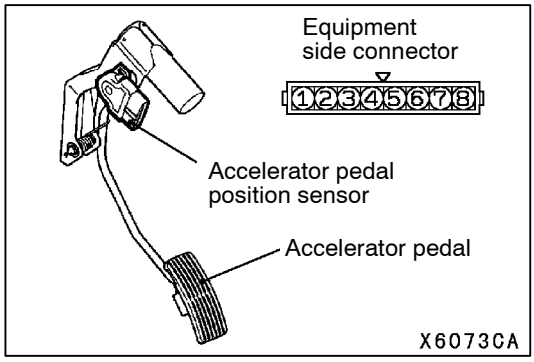


## ACCELERATOR PEDAL POSITION SENSOR ADJUSTMENT

**Caution**

1. **The Accelerator pedal position sensor should not be moved unnecessarily; it has been precisely adjusted by the manufacturer.**
2. **If the adjustment is disturbed for any reason, readjust as follows.**

1. Remove the accelerator pedal complete.
2. Connect the MUT-II to the diagnosis connector.

Purchased from www.WorkshopManuals.co.uk

www.WorkshopManuals.co.uk

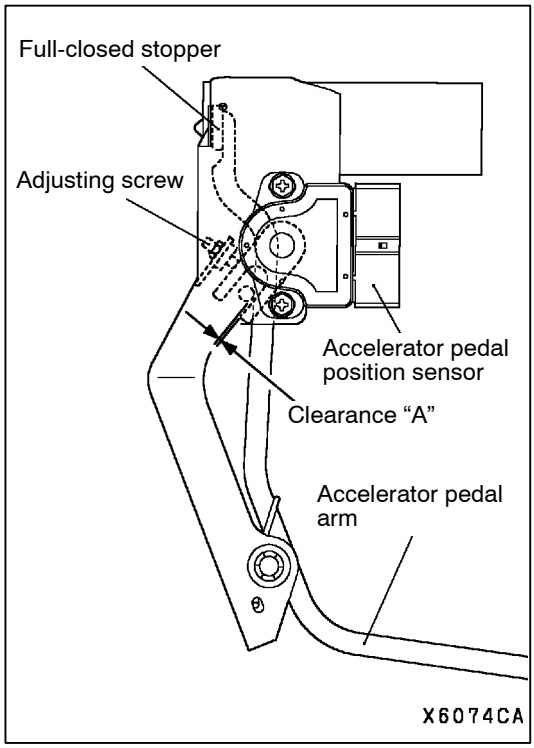


3. Check that the accelerator pedal arm touches the full-closed stopper.
4. Adjust the pedal arm by the adjusting screw so that clearance "A" (see the illustration) is 0.5 - 0.93 mm.
5. Hold the adjusting screw with the lock nut.
6. Turn the ignition switch to the ON position. (but do not start the engine.)
7. Turn the accelerator pedal position sensor until the output from accelerator pedal position sensor (1st channel) satisfies the standard value.

   **Standard value: 0.985 - 1.085 V**
8. Tighten the accelerator pedal position sensor mounting bolts securely.
9. Install the accelerator pedal complete.

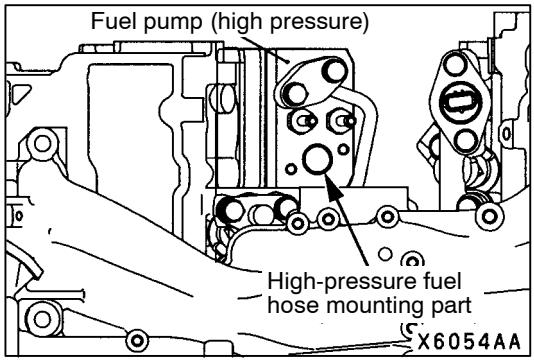


## FUEL PRESSURE TEST

### MEASUREMENT OF FUEL LOW PRESSURE BETWEEN FUEL PUMP (LOW PRESSURE) AND FUEL PUMP (HIGH PRESSURE)

1. Release residual pressure from the fuel pipe line to prevent fuel gush out. (Refer to P.13A-225.)
2. Disconnect the high-pressure fuel hose at the fuel pump (high pressure) side.

   **Caution**
   **Cover the hose connection with rags to prevent splash of fuel that could be caused by some residual pressure in the fuel pipe line.**

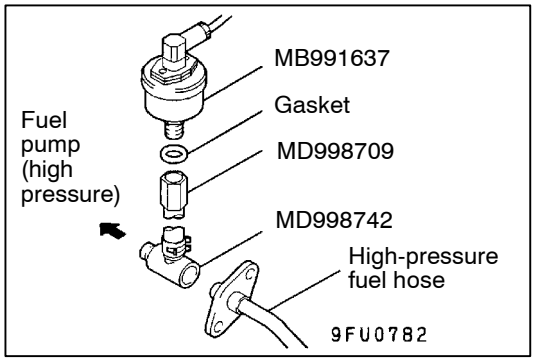


3. Remove the union joint and bolt from the special tool (adapter hose) and instead attach the special tool (hose adapter) to the adapter hose.
4. Install the special tool (for measuring the fuel pressure) that was set up in step 3.

   <When using the fuel pressure gauge set (special tool)>
   (1) Install the special tool (for measuring the fuel pressure) between the high-pressure fuel hose and the fuel pump (high pressure).

Purchased from www.WorkshopManuals.co.uk

www.WorkshopManuals.co.uk

(2) Install the fuel pressure gauge set (special tool) on the special tool (for measuring the fuel pressure) putting the gasket between them.
(3) Connect the lead wire of the fuel pressure gauge set (special tool) to the power supply (cigarette lighter socket) and to the MUT-II.

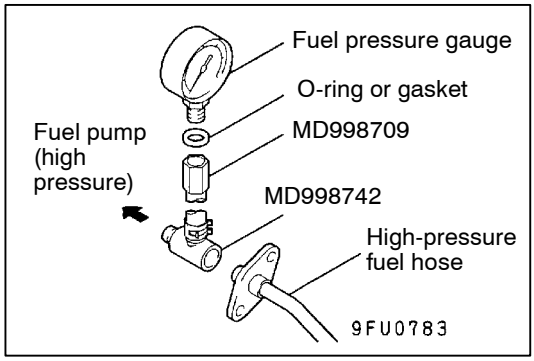


<When using the fuel pressure gauge>
(1) Install the fuel pressure gauge on the special tool (for measuring the fuel pressure) putting a suitable O-ring or gasket between them.
(2) Install the special tool which was set up in step (1) between the high-pressure fuel hose and the fuel pump (high pressure).

5. Connect the MUT-II to the diagnosis connector.

**Caution**
**Turn off the ignition switch before disconnecting or connecting the MUT-II.**

6. Turn the ignition switch to ON. (But do not start the engine.)
7. Select “Item No.07” from the MUT-II Actuator test to drive the fuel pump (low pressure) at the fuel tank side. Check that there are no fuel leaks from any parts.
8. Finish the actuator test or turn the ignition switch to OFF.
9. Start the engine and run at idle.
10. Measure fuel pressure while the engine is running at idle.

**Standard value: approximately 329 kPa**

11. Check to see that fuel pressure at idle does not drop even after the engine has been raced several times.
12. If fuel pressure is out of the standard value, troubleshoot and repair according to the table below.

| Symptom | Probable cause | Remedy |
|---|---|---|
| ● Fuel pressure too low<br>● Fuel pressure drops after racing | Clogged fuel filter | Replace fuel filter |
| | Fuel leaking to return side due to poor fuel pressure regulator (low pressure) valve seating or settled spring | Replace fuel pressure regulator (low pressure) |
| | Low fuel pump (low pressure) delivery pressure | Replace the fuel pump (low pressure) |
| Fuel pressure too high | Binding valve in fuel pressure regulator (low pressure) | Replace fuel pressure regulator (low pressure) |
| | Clogged fuel return hose or pipe | Clean or replace hose or pipe |

Purchased from www.WorkshopManuals.co.uk

www.WorkshopManuals.co.uk

13. Stop the engine and check change of fuel pressure gauge reading. Normal if the reading does not drop within 2 minutes. If it does, observe the rate of drop and troubleshoot and repair according to the table below.

| Symptom | Probable cause | Remedy |
|---|---|---|
| Fuel pressure drops gradually after engine is stopped | Leaky fuel pressure regulator (low pressure) valve seat | Replace fuel pressure regulator (low pressure) |
| Fuel pressure drops sharply immediately after engine is stopped | Check valve in fuel pump (low pressure) is held open | Replace the fuel pump (low pressure) |

14. Release residual pressure from the fuel pipe line. (Refer to P.13A-225.)
15. Remove the fuel pressure gauge and special tools from the fuel pump (high pressure).

    **Caution**
    **Cover the hose connection with rags to prevent splash of fuel that could be caused by some residual pressure in the fuel pipe line.**

16. Replace the O-ring at the end of the high-pressure fuel hose with a new one. Furthermore, apply engine oil to the new O-ring before replacement.
17. Fit the high-pressure fuel hose to the fuel pump (high pressure) and tighten the mounting bolt to specified torque.
18. Check for any fuel leaks by following the procedure in step 7.
19. Disconnect the MUT-II.

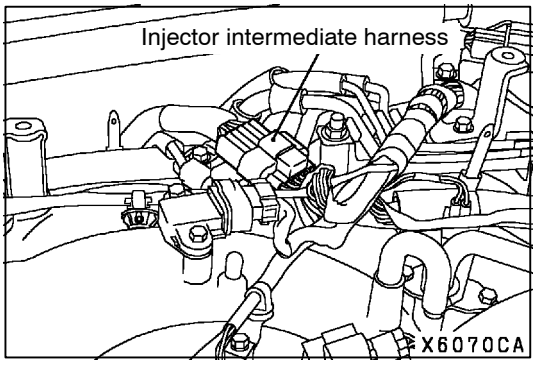


## MEASUREMENT OF FUEL HIGH PRESSURE BETWEEN FUEL PUMP (HIGH PRESSURE) AND INJECTORS

NOTE
Measurement of the fuel pressure between the fuel pump (high pressure) and the injectors should be carried out after checking that the fuel pressure between the fuel pump (low pressure) and the fuel pump (high pressure) is normal.

1. Connect the MUT-II to the diagnosis connector.
2. Disconnect the injector intermediate harness connector.
3. Turn the ignition switch to ON.
4. Select “Item No.74” from the MUT-II Data list.
5. Crank the engine continuously for 2 seconds or more, and visually check that there are no fuel leaks from any parts.

   **Caution**
   **If any fuel leaks appear, stop cranking immediately and repair the source of the leak.**

6. Check if the fuel pressure is more than 1 MPa immediately after 20 seconds have passed since cranking was finished.

Purchased from www.WorkshopManuals.co.uk

www.WorkshopManuals.co.uk

7. If the fuel pressure is lower than 1 MPa, it means that there is likely to be a leak in the high-pressure fuel system, so this system should be checked.
8. Turn the ignition switch to OFF.
9. Connect the injector intermediate harness connector.
10. Start the engine and run at idle.
11. Measure fuel pressure while the engine is running at idle.

    **Standard value: 4 - 6.9 MPa**

12. Check to see that fuel pressure at idle does not drop even after the engine has been raced several times.
13. If fuel pressure is out of the standard value, troubleshoot and repair according to the table below.

| Symptom | Probable cause | Remedy |
|---|---|---|
| • Fuel pressure too low<br>• Fuel pressure drops after racing | Fuel leaking to return side due to poor fuel pressure regulator (high pressure) valve seating or settled spring | Replace fuel pressure regulator (high pressure) |
| | Low fuel pump (high pressure) delivery pressure | Replace the fuel pump (high pressure) |
| Fuel pressure too high | Binding valve in fuel pressure regulator (high pressure) | Replace fuel pressure regulator (high pressure) |
| | Clogged fuel return hose or pipe | Clean or replace hose or pipe |

14. Stop the engine and turn the ignition switch to OFF.
15. Disconnect the MUT-II.

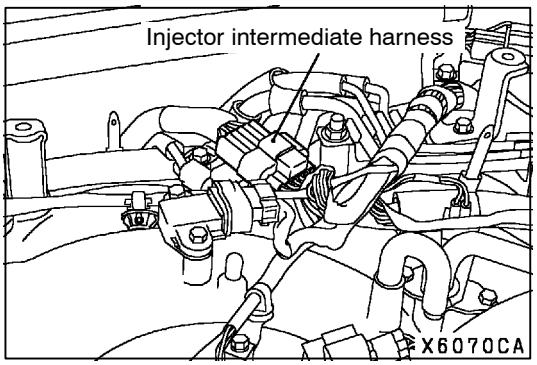


## FUEL LEAK CHECK

1. Connect the MUT-II to the diagnosis connector.
2. Disconnect the injector intermediate harness connector.
3. Turn the ignition switch to ON.
4. Select “Item No.74” from the MUT-II Data list.
5. Crank the engine continuously for two seconds or more, and visually check that there are no fuel leaks from any parts.

   **Caution**
   **If any fuel leaks appear, stop cranking immediately and repair the source of the leak.**

6. Crank the engine, and then measure fuel pressure immediately after 20 seconds.

   **Limit: Minimum 1 MPa**

   **Caution**
   **If the fuel pressure is less than 1 MPa, there may be a partial fuel leak in the high-pressure fuel system.**

7. Turn off the ignition switch.
8. Reconnect the injector intermediate connector.
9. Remove the MUT-II.

Purchased from www.WorkshopManuals.co.uk

www.WorkshopManuals.co.uk

## COMPONENT LOCATION

| Name | Symbol | Name | Symbol |
|---|---|---|---|
| A/C relay | O | Fuel pump relay | H |
| A/C switch | R | Ignition coil | F |
| Accelerator pedal position sensor (1st and 2nd channels) | T | Ignition failure sensor | D |
| | | Inhibitor switch <A/T> | X |
| Air flow sensor (with intake air temperature sensor and barometric pressure sensor) | A | Injectors | F |
| | | Injector driver (L.H.D) | B |
| Camshaft position sensor | E | Injector driver (R.H.D) | G |
| Clutch switch <M/T> | S | Injector driver relay | H |
| Crank angle sensor | K | Oxygen sensor (front) | V |
| Detonation sensor | L | Oxygen sensor (rear) <M/T> | W |
| Diagnosis connector | Q | Power steering fluid pressure switch | N |
| EGR valve | I | Purge control solenoid valve | M |
| Engine control relay | H | Throttle position sensor | C |
| Engine coolant temperature sensor | J | Throttle valve controller | U |
| Engine-A/T-ECU <A/T> | U | Throttle valve control servo | C |
| Engine-ECU <M/T> | U | Throttle valve control servo relay | H |
| Engine warning lamp (CHECK ENGINE lamp) | P | Vehicle speed sensor | Y |
| Fuel pressure sensor | E | | |

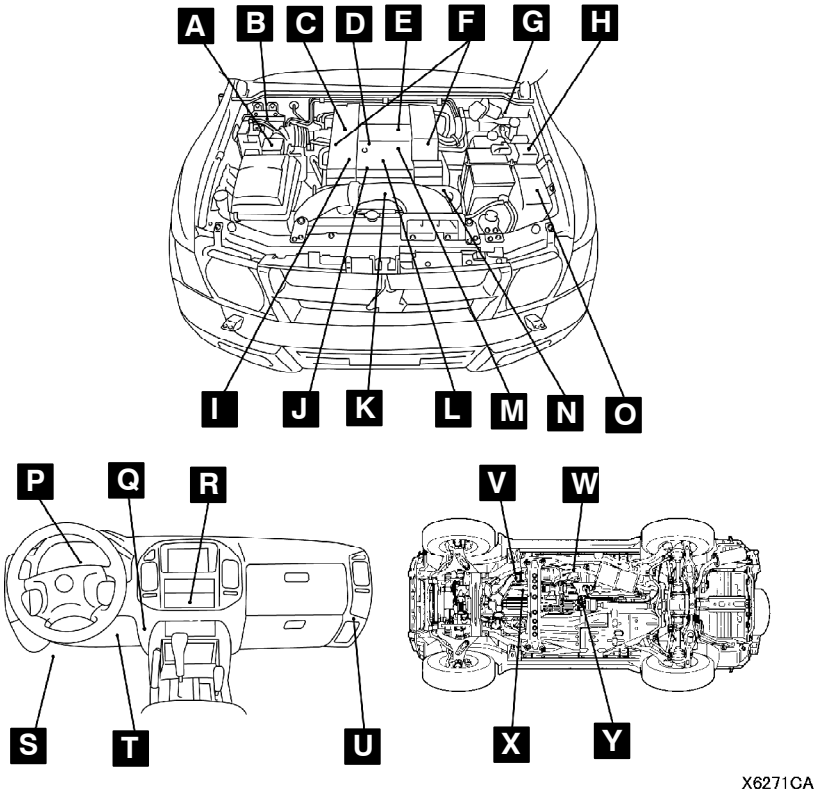


Purchased from www.WorkshopManuals.co.uk

www.WorkshopManuals.co.uk

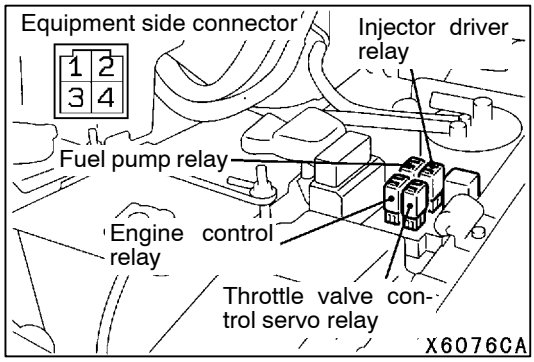


## ENGINE CONTROL RELAY, FUEL PUMP RELAY, INJECTOR DRIVER CONTROL RELAY AND THROTTLE VALVE CONTROL SERVO RELAY CONTINUITY CHECK

| Battery voltage | Terminal No. | | | |
|---|---|---|---|---|
| | 1 | 2 | 3 | 4 |
| Not supplied | | ○ | — | ○ |
| Supplied | ○ | ⊖ | ○ | ⊕ |

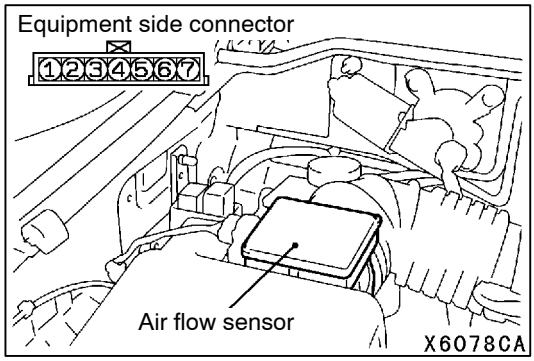


## INTAKE AIR TEMPERATURE SENSOR CHECK

1. Disconnect the air flow sensor connector.
2. Measure resistance between terminals 5 and 6.

   **Standard value:**
   **2.3 - 3.0 kΩ (at 20°C)**
   **0.30 - 0.42 kΩ (at 80°C)**

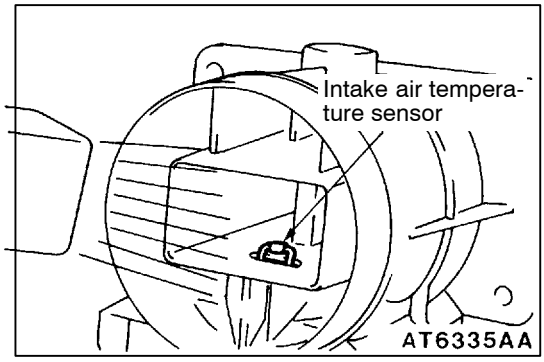


3. Measure resistance while heating the sensor using a hair drier.

   **Normal condition:**

| Temperature (°C) | Resistance (kΩ) |
|---|---|
| Higher | Smaller |

4. If the value deviates from the standard value or the resistance remains unchanged, replace the air flow sensor assembly.

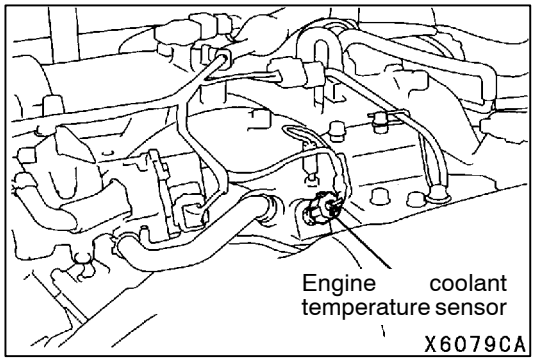


## ENGINE COOLANT TEMPERATURE SENSOR CHECK

**Caution**
**Be careful not to touch the connector (resin section) with the tool when removing and installing.**

1. Remove the engine coolant temperature sensor.

Purchased from www.WorkshopManuals.co.uk

www.WorkshopManuals.co.uk

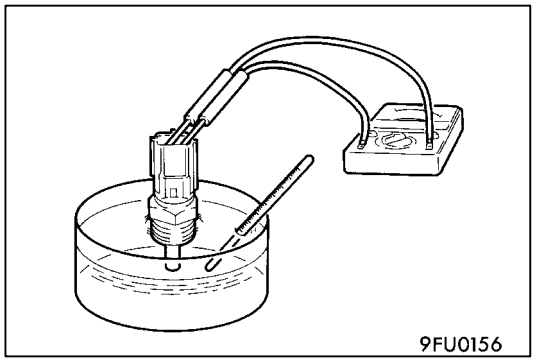


2. With temperature sensing portion of engine coolant temperature sensor immersed in hot water, check resistance.

   **Standard value:**
   **2.1 - 2.7 kΩ (at 20°C)**
   **0.26 - 0.36 kΩ (at 80°C)**

3. If the resistance deviates from the standard value greatly, replace the sensor.

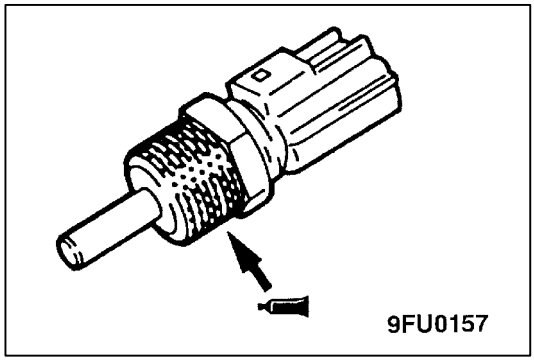


4. Apply sealant to threaded portion.

   **Specified sealant:**
   **3M NUT Locking Part No.4171 or equivalent**

5. Install the engine coolant temperature sensor and tighten it to the specified torque.

   **Tightening torque: 29 N·m**

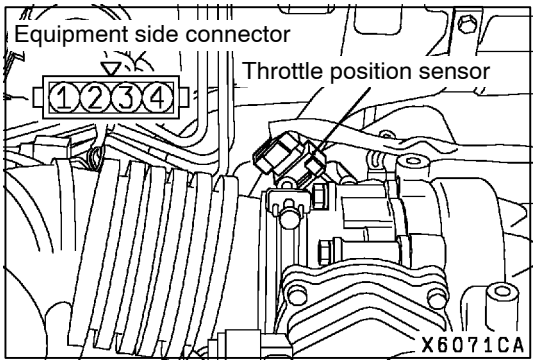


## THROTTLE POSITION SENSOR CHECK

1. Disconnect the throttle position sensor connector.
2. Measure the resistance between throttle position sensor side connector terminal 1 and terminal 3.

   **Standard value: 0.9 - 2.5 kΩ**

3. Measure resistance between terminal Nos. 1 and 2 as well as 1 and 4 of the throttle position sensor connector, respectively.

   **Normal condition:**

| | |
|---|---|
| Throttle valve slowly open until fully open from the idle position | Changes smoothly in proportion to the opening angle of the throttle valve |

4. If the resistance is outside the standard value, or if it doesn't change smoothly, replace the throttle position sensor.

   NOTE
   For the throttle position sensor adjustment procedure, refer to P.13A-220.

Purchased from www.WorkshopManuals.co.uk

www.WorkshopManuals.co.uk

## ACCELERATOR PEDAL POSITION SENSOR CHECK

1. Disconnect the accelerator pedal position sensor connector.
2. Measure the resistance between accelerator pedal position sensor connector terminal (1) [accelerator pedal position sensor (1st channel) earth] and terminal (2) [accelerator pedal position sensor (1st channel) power supply], and between terminal (7) [accelerator pedal position sensor (2nd channel) earth] and terminal (8) [accelerator pedal position sensor (2nd channel) power supply].

   **Standard value: 3.5 - 6.5 kΩ**

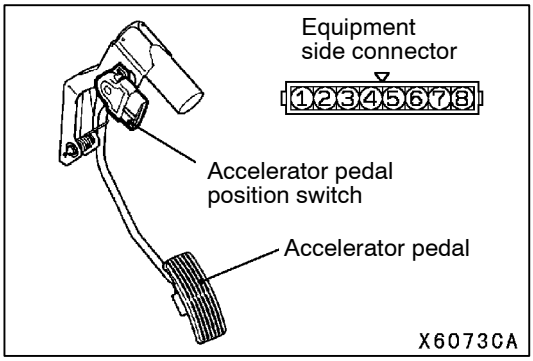


3. Measure the resistance between accelerator pedal position sensor connector terminal (2) [accelerator pedal position sensor (1st channel) power supply] and terminal (3) [accelerator pedal position sensor (1st channel) output]; and between terminal (8) [accelerator pedal position sensor (2nd channel) power supply] and terminal (6) [accelerator pedal position sensor (2nd channel) output].

   **Normal condition:**

| | |
|---|---|
| When accelerator pedal is gently depressed | Changes comparatively smoothly in proportion to the accelerator pedal depression amount |

4. If the measured values are outside the standard value range, or if the resistance does not change smoothly, replace the accelerator pedal position sensor.

   NOTE
   After replacement, adjust the accelerator pedal position sensor. (Refer to P.13A-221.)

Purchased from www.WorkshopManuals.co.uk

www.WorkshopManuals.co.uk

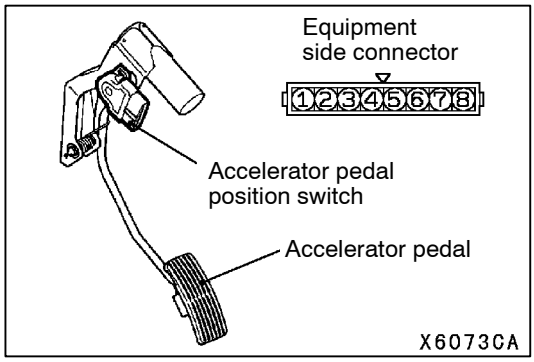


## ACCELERATOR PEDAL POSITION SWITCH CHECK

1. Disconnect the accelerator pedal position sensor (1st channel) connector.
2. Check continuity between terminal Nos. 4 (accelerator pedal position switch) and 5 (sensor earth) of the connector.

   **Normal condition**

| | |
|---|---|
| Accelerator pedal | Continuity |
| Depressed | No continuity |
| Released | Continuity (0 Ω) |

3. If defective, replace the accelerator pedal position sensor assembly.

   NOTE
   After replacement, adjust the accelerator pedal position sensor and switch. (Refer to P.13A-221.)

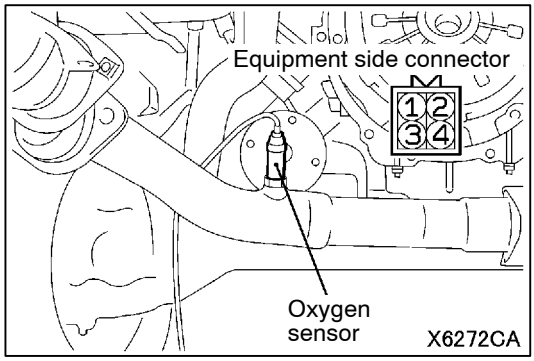


## OXYGEN SENSOR CHECK

**<Oxygen sensor (front)>**

1. Disconnect the oxygen sensor connector and connect the special tool (test harness) to the connector on the oxygen sensor side.
2. Make sure that there is continuity (4.5 - 8.0 Ω at 20°C) between terminal 2 (red clip of special tool) and terminal 4 (blue clip of special tool) on the oxygen sensor connector.

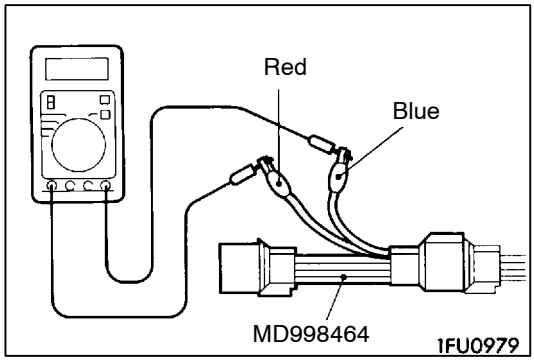


3. If there is no continuity, replace the oxygen sensor.
4. Warm up the engine until engine coolant is 80°C or higher.

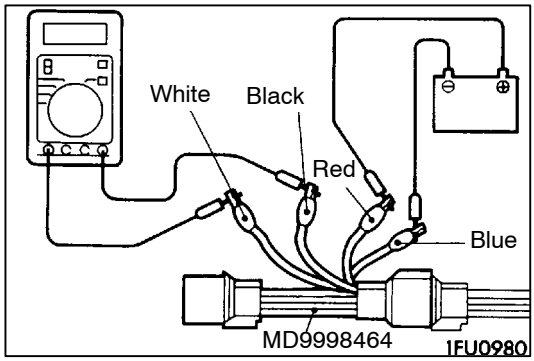


5. Use a jumper wire to connect terminal 1 (red clip) of the oxygen sensor connector to the battery (+) terminal and terminal 3 (blue clip) to the battery (-) terminal.

   **Caution**
   **Be very careful when connecting the jumper wire; incorrect connection can damage the oxygen sensor.**

6. Connect a digital voltage meter between terminal 2 (black clip) and terminal 4 (white clip).

Purchased from www.WorkshopManuals.co.uk

www.WorkshopManuals.co.uk

7. While repeatedly racing the engine, measure the oxygen sensor output voltage.

**Standard value:**

| Engine | Oxygen sensor output voltage | Remarks |
|---|---|---|
| When racing the engine | 0.6 - 1.0 V | If you make the air/fuel ratio rich by racing the engine repeatedly, a normal oxygen sensor will output a voltage of 0.6 - 1.0 V. |

8. If the sensor is defective, replace the oxygen sensor.

NOTE
For removal and installation of the oxygen sensor, refer to GROUP 15 - Exhaust Pipe and Main Muffler.

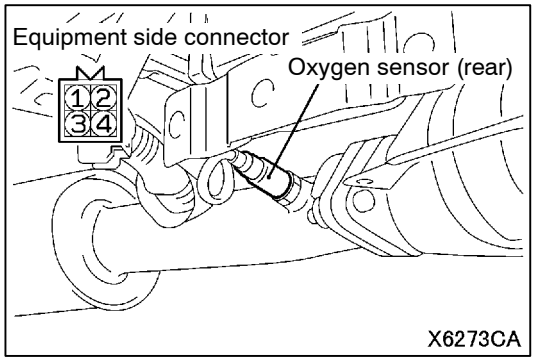


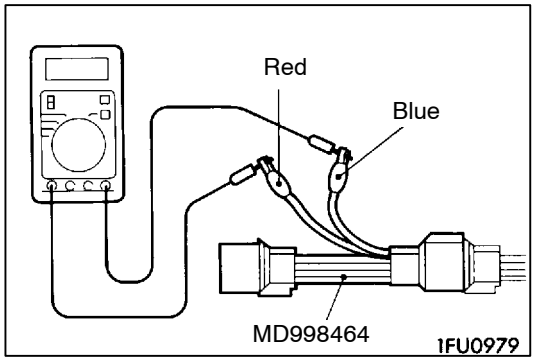


**<Oxygen sensor (rear) M/T only>**

1. Disconnect the oxygen sensor connector and connect the special tool (test harness set) to the connector on the oxygen sensor side.
2. Make sure that there is continuity (4.5 - 8.0 Ω at 20°C) between terminal 2 and terminal 4 on the oxygen sensor connector.
3. If there is no continuity, replace the oxygen sensor.

NOTE
(1) If the MUT-II does not display the standard value although no abnormality is found by the above mentioned continuity test and harness check, replace the oxygen sensor (rear).
(2) For removal and installation of the oxygen sensor, refer to GROUP 15 - Exhaust Pipe and Main Muffler.

Purchased from www.WorkshopManuals.co.uk

www.WorkshopManuals.co.uk

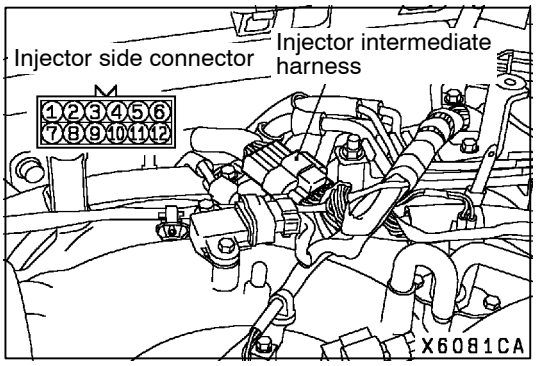


## INJECTOR CHECK

1. Disconnect the injector intermediate harness connector.
2. Measure the resistance between each of the terminals.

   **Standard value: 0.9 - 1.1 Ω (at 20°C)**

| Injector | Measurement terminal |
|---|---|
| No.1 cylinder | 11 - 12 |
| No.2 cylinder | 5 - 6 |
| No.3 cylinder | 9 - 10 |
| No.4 cylinder | 3 - 4 |
| No.5 cylinder | 7 - 8 |
| No.6 cylinder | 1 - 2 |

3. Connect the injector intermediate harness connector.

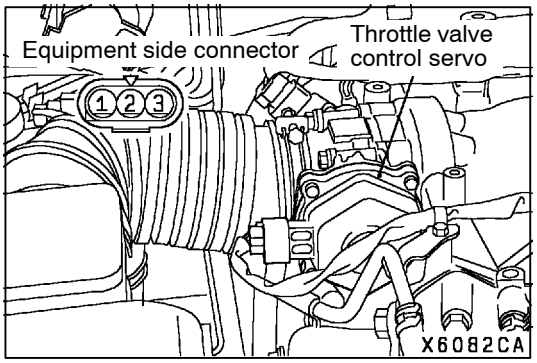


## THROTTLE VALVE CONTROL SERVO CHECK

### Operation Check

1. Disconnect the air intake hose from the throttle body.
2. Turn on the ignition switch.
3. Check that the throttle valve opens or closes in response to the accelerator pedal depression.

### Check of Coil Resistance

1. Disconnect the throttle valve control servo connector.
2. Measure resistance between the throttle valve control servo connector terminals.

   **Standard value:**

| Terminals to be measured | Resistance value (Ω) |
|---|---|
| 1 - 2 | 0.6 - 1.0 (at 20°C) |
| 1 - 3 | |
| 2 - 3 | |

3. Check that there is no continuity between the terminals and body.

Purchased from www.WorkshopManuals.co.uk

www.WorkshopManuals.co.uk

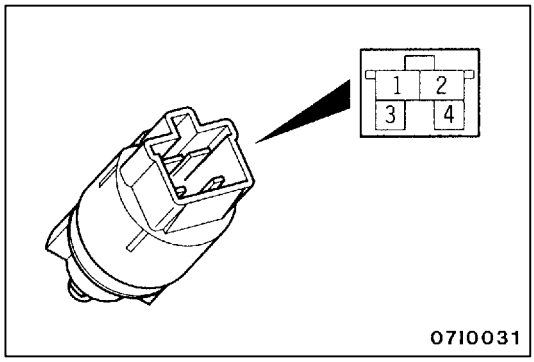


## CLUTCH SWITCH CHECK

1. Disconnect the connector.
2. Check for continuity between the terminals of the switch.

| Measurement conditions | Terminal No. | |
|---|---|---|
| | 1 | 2 |
| When clutch pedal is depressed. | ○ | ○ |
| When clutch pedal is not depressed. | | |

## PURGE CONTROL SOLENOID VALVE CHECK

Refer to GROUP 17 - Emission Control System.

## EGR VALVE CHECK

Refer to GROUP 17 - Emission Control System.

Purchased from www.WorkshopManuals.co.uk

www.WorkshopManuals.co.uk

# INJECTOR

## REMOVAL AND INSTALLATION

**Pre-removal and Post-installation Operation**
- Fuel Line Pressure Reduction <before removal only> (Refer to P.13A-219.)
- Engine Cover Removal and Installation
- Air Intake Hose Removal and Installation (Refer to GROUP 15 - Air Cleaner.)
- Intake Manifold Removal and Installation (Refer to GROUP 15 - Intake Manifold.)
- Fuel Leak Check <after installation only> (Refer to P.13A-225.)

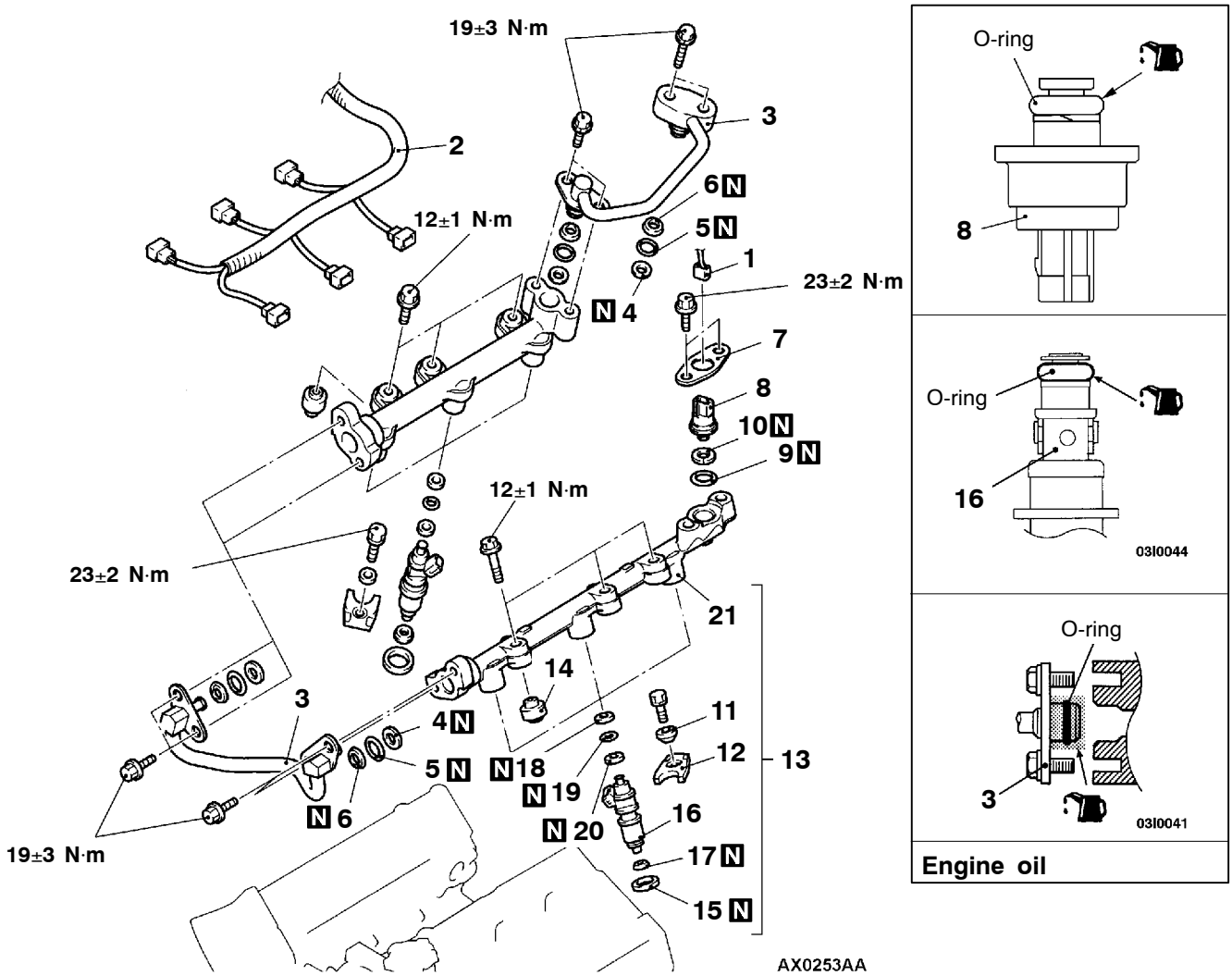


**Removal steps**

▶F◀ ● Air bleeding from high-pressure fuel line
1. Fuel pressure sensor connector
◀A▶ 2. Injector harness
▶E◀ 3. Fuel feed pipe
▶E◀ 4. Back-up ring A
▶E◀ 5. O-ring
▶E◀ 6. Back-up ring B
◀B▶ ▶D◀ 7. Flange
▶D◀ 8. Fuel pressure sensor
▶C◀ 9. O-ring
▶C◀ 10. Back-up ring
▶B◀ 11. Injector washer
▶B◀ 12. Injector holder
◀C▶ ▶B◀ 13. Delivery pipe assembly and Fuel injector assembly
▶B◀ 14. Insulator
▶B◀ 15. Injector gasket
16. Fuel injector assembly
▶A◀ 17. Corrugated washer
▶A◀ 18. Back-up ring A
▶A◀ 19. O-ring
▶A◀ 20. Back-up ring B
21. Delivery pipe

Purchased from www.WorkshopManuals.co.uk

www.WorkshopManuals.co.uk

## REMOVAL SERVICE POINTS

### ◀A▶ INJECTOR HARNESS DISCONNECTION

**Caution**
**Disconnect the negative battery cable from its terminal before carrying out this operation.**

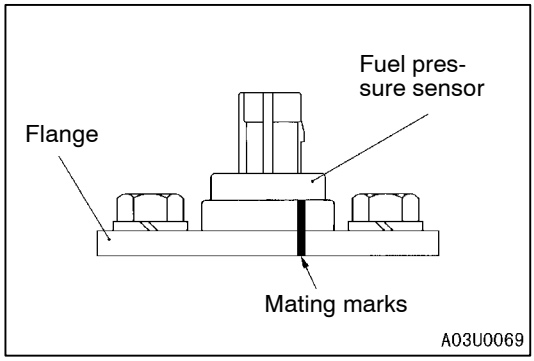


### ◀B▶ FLANGE REMOVAL

If the fuel pressure sensor is reused, make mating marks on the sensor and the flange.

NOTE
The flange secures sealing performance of fuel pressure sensor and installation rigidity by bending to deform the shape at installation. Therefore, make mating marks to install the flange with the right phase and side. In addition, if the fuel pressure sensor is replaced with a new one, replace it together with the flange as a set.

### ◀C▶ DELIVERY PIPE ASSEMBLY/FUEL INJECTOR ASSEMBLY REMOVAL

Remove the delivery pipe assembly with the fuel injector assembly still attached.

**Caution**
**Be careful not to drop the fuel injector assembly when removing the delivery pipe assembly.**

## INSTALLATION SERVICE POINTS

### ▶A◀ BACK-UP RING B/O-RING/BACK-UP RING A/CORRUGATED WASHER INSTALLATION

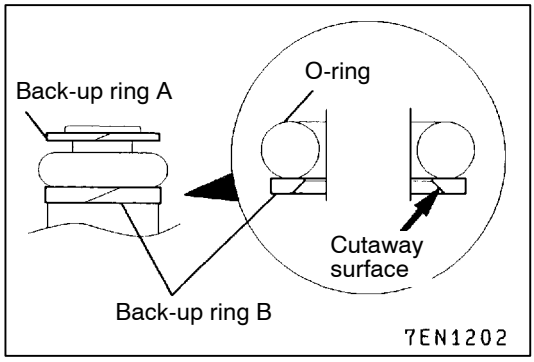


1. Install the back-up rings and the O-ring as shown in the illustration.

   **Caution**
   **(1) Install the back-up ring B facing its cutaway surface toward the opposite side of the O-ring as shown in the illustration.**
   **(2) Do not confuse back-up ring A with that for the fuel pressure sensor. (External diameter of back-up ring A: 14.8 mm)**

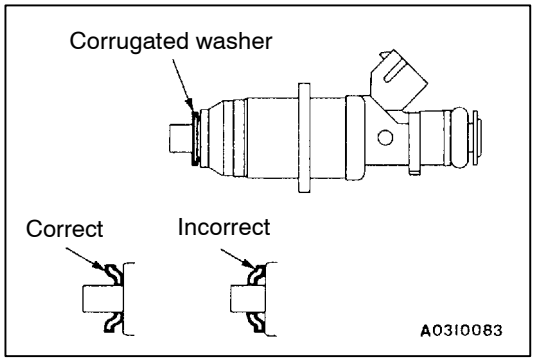


2. Apply petroleum jelly to the corrugated washer to prevent it from dropping, and then install it to the direction shown.

   **Caution**
   **The corrugated washer should always be replaced with a new part.**

Purchased from www.WorkshopManuals.co.uk

www.WorkshopManuals.co.uk

### ▶B◀ INJECTOR GASKET/INSULATOR/DELIVERY PIPE ASSEMBLY AND FUEL INJECTOR ASSEMBLY/INJECTOR HOLDER//INJECTOR WASHER INSTALLATION

1. Apply a small amount of fresh engine oil to the O-ring.

   **Caution**
   **Take care not to let any of the engine oil get inside the delivery pipe assembly.**

2. While being careful not to damage the O-ring, turn the fuel injector assembly to the left and right and connect it to the delivery pipe assembly. After connecting, check that the fuel injector turns smoothly.
3. If the fuel injector does not turn smoothly, the cause may be that the O-ring is getting caught. Remove the fuel injector, check the O-ring for damage and re-connect the fuel injector to the delivery pipe assembly and then re-check.
4. Align the injector mating mark with the delivery pipe mating mark.
5. Install the injector gasket and the insulator to the cylinder head.
6. Install the delivery pipe and fuel injectors assembly to the cylinder head, and then tighten them provisionally.
7. Install the injector holders and washers, and then tighten them to the specified torque.

   **Caution**
   **Observe the tightening torque.**

8. Working from the centre mounting bolt, tighten the delivery pipe and injector assembly mounting bolts to the specified torque.

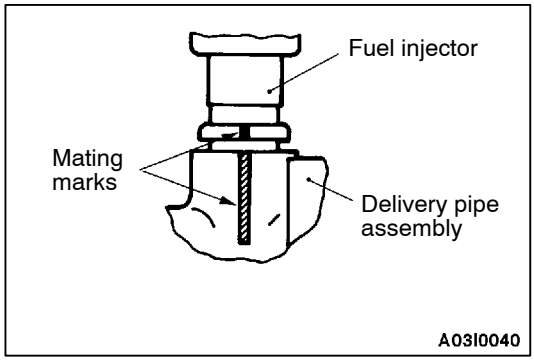


### ▶C◀ BACK-UP RING B/O-RING INSTALLATION

Install the back-up rings and the O-ring as shown in the illustration.

**Caution**
**Be careful not to confuse this back-up ring with the back-up ring for the injector or back-up ring A for the fuel pipe. (External diameter of the back-up ring: 15.1 mm)**

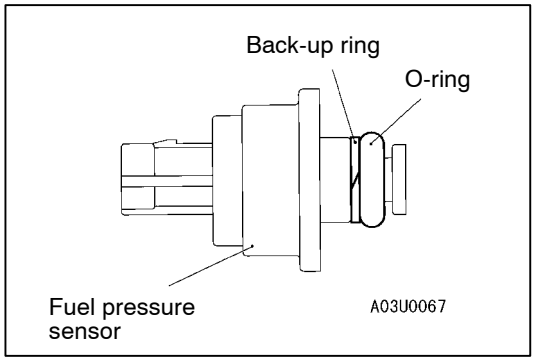


Purchased from www.WorkshopManuals.co.uk

www.WorkshopManuals.co.uk

### ▶D◀ FUEL PRESSURE SENSOR/FLANGE INSTALLATION

1. Apply a small amount of fresh engine oil to the O-ring.

   **Caution**
   **Take care not to let any of the engine oil get inside the delivery pipe.**

2. Align the mating marks, and then install the sensor to the delivery pipe.

   **Caution**
   **If the fuel pressure sensor is replaced, replace it together with the flange as a set.**

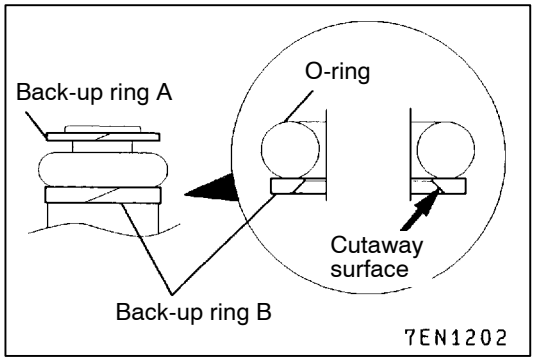


### ▶E◀ BACK-UP RING B/O-RING/BACK-UP RING A/FUEL PIPE INSTALLATION

1. Install the back-up rings and the O-ring as shown in the illustration.

   **Caution**
   **(1) Install the back-up ring B facing its cutaway surface toward the opposite side of the O-ring as shown in the illustration.**
   **(2) Do not confuse back-up ring A with that for the fuel pressure sensor. (External diameter of back-up ring A: 14.8 mm)**

2. Apply a small amount of fresh engine oil to the O-ring.

   **Caution**
   **Take care not to let any of the engine oil get inside the fuel pump (high pressure) and delivery pipe.**

3. Insert the fuel pipe into the fuel pump (high-pressure) and the delivery pipe ports squarely. Insert the pipe securely, being careful not to twisting it, and then tighten the mounting bolts to the specified torque.

### ▶F◀ AIR BLEEDING FROM THE HIGH-PRESSURE FUEL LINE

1. Run the engine at 2,000 r/min for 15 seconds or more in order to bleed the air.

Purchased from www.WorkshopManuals.co.uk

www.WorkshopManuals.co.uk

NOTE
When removing the fuel pump (high pressure), air may get into the fuel pump (high pressure). If air gets into the fuel pump (high pressure), diagnosis code No.56 for abnormal fuel pressure will be output.

2. Use the MUT-II to check the diagnosis code. If the diagnosis code No.56 for fuel pressure sensor system defect is output, erase it.

Purchased from www.WorkshopManuals.co.uk

www.WorkshopManuals.co.uk

# FUEL PUMP (HIGH PRESSURE)

## REMOVAL AND INSTALLATION

**Pre-removal and Post-installation Operation**
- Fuel Line Pressure Reduction <before removal only> (Refer to P.13A-219.)
- Engine Cover Removal and Installation
- Air Intake Hose Removal and Installation (Refer to GROUP 15 - Air Cleaner.)
- Intake Manifold Removal and Installation (Refer to GROUP 15 - Intake Manifold.)
- Fuel Leak Check <after installation only> (Refer to P.13A-225.)
- Air Bleeding from High Pressure Fuel Line (Refer to P.13A-237.)

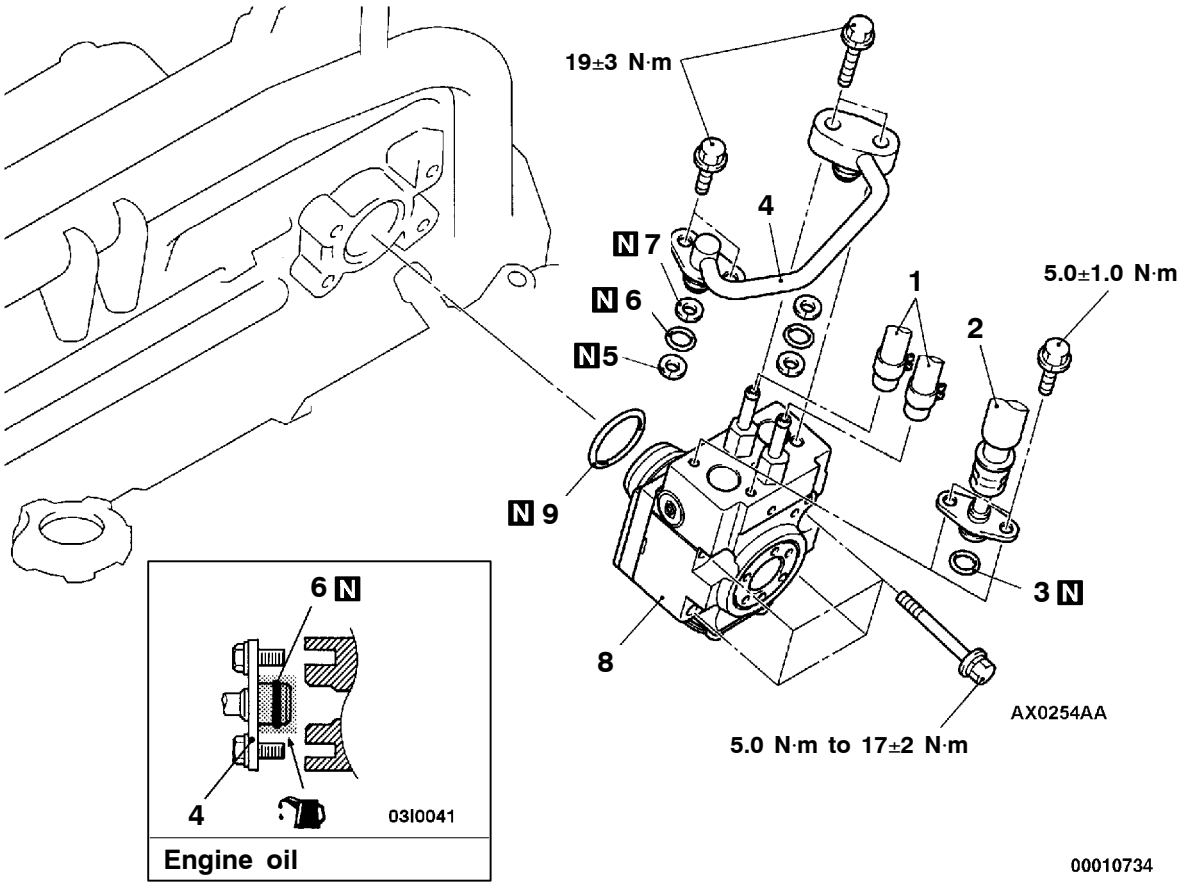


**Removal steps**

▶D◀ 1. Fuel return hose connection
▶C◀ 2. Fuel pressure hose connection
▶C◀ 3. O-ring
▶B◀ 4. Fuel feed pipe
▶B◀ 5. Back-up ring A
▶B◀ 6. O-ring
▶B◀ 7. Back-up ring B
▶A◀ 8. Fuel pump (high pressure)
9. O-ring

## INSTALLATION SERVICE POINTS

### ▶A◀ FUEL PUMP (HIGH PRESSURE) INSTALLATION

1. Apply a small amount of fresh engine oil to the fuel pump (high pressure) roller and O-ring.
2. Install temporarily the fuel pump (high pressure) to the cylinder head.

Purchased from www.WorkshopManuals.co.uk

www.WorkshopManuals.co.uk

3. Insert the fuel pump (high-pressure) to the cylinder head ports squarely, and then tighten the mounting bolts temporarily (a little more tightly than finger-tightening).Tightening them to the specified torque should be carried out in later step ▶B◀.

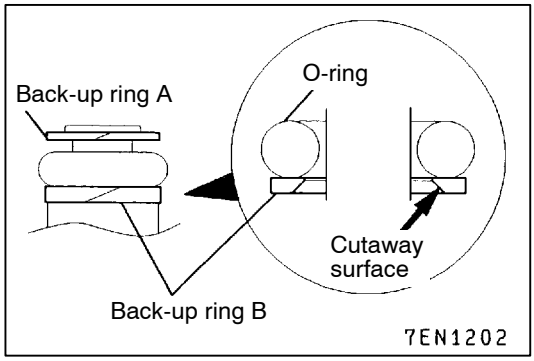


**▶B◀ BACK-UP RING B/O-RING/BACK-UP RING A/FUEL PIPE INSTALLATION**

1. Install the back-up rings and the O-ring as shown in the illustration.

   **Caution**
   **(1) Install the back-up ring B facing its cutaway surface toward the opposite side of the O-ring as shown in the illustration.**
   **(2) Confirm the outer diameter of the back-up ring A. Take care not to install the back-up ring for the fuel pressure sensor by mistake. (Outer diameter of the back-up ring A: 14.8 mm)**

2. Apply a small amount of fresh engine oil to the O-ring.

   **Caution**
   **Take care not to let any of the engine oil get inside the fuel pump (high pressure) or the delivery pipe assembly.**

3. Insert the fuel pipe into the fuel pump (high-pressure) and the delivery pipe ports squarely.
   Insert the pipe securely, being careful not to twisting it, and then tighten the mounting bolts to the specified torque.

   **Tightening torque: 19 ± 3 N·m**

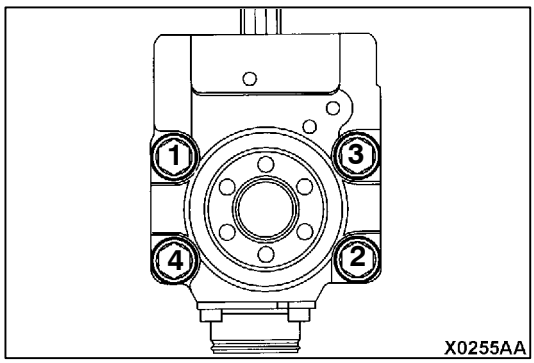


4. Tighten the temporarily tightened mounting bolts of the fuel pump (high-pressure) in the shown order to 5.0 N·**m**.
5. Tighten the bolts to 17 N·m in the order shown in the illustration. The overall difference in tightening torque between the four bolts should be within 2 N·m.

Purchased from www.WorkshopManuals.co.uk

www.WorkshopManuals.co.uk

### ▶C◀ O-RING/FUEL PRESSURE HOSE INSTALLATION

1. Apply a small amount of fresh engine oil to the O-ring.

   **Caution**
   **Take care not to let any of the engine oil get inside the fuel pump (high pressure) or the delivery pipe assembly.**

2. While being careful not to damage the O-ring, turn the fuel pressure hose to the left and right and connect it to the delivery pipe assembly. After connecting, check that the fuel injector turns smoothly.
3. If the fuel pressure hose does not turn smoothly, the cause may be that the O-ring is getting caught. Remove the fuel pressure hose, check the O-ring for damage and re-connect the fuel pressure hose to the delivery pipe assembly and then re-check.

Purchased from www.WorkshopManuals.co.uk

www.WorkshopManuals.co.uk

# THROTTLE BODY

## REMOVAL AND INSTALLATION

**Pre-removal and Post-installation Operation**
- Engine Coolant Draining and Supplying (Refer to GROUP 14 - On-vehicle Service.)
- Engine Cover Removal and Installation
- Air Cleaner Removal and Installation (Refer to GROUP 15.)

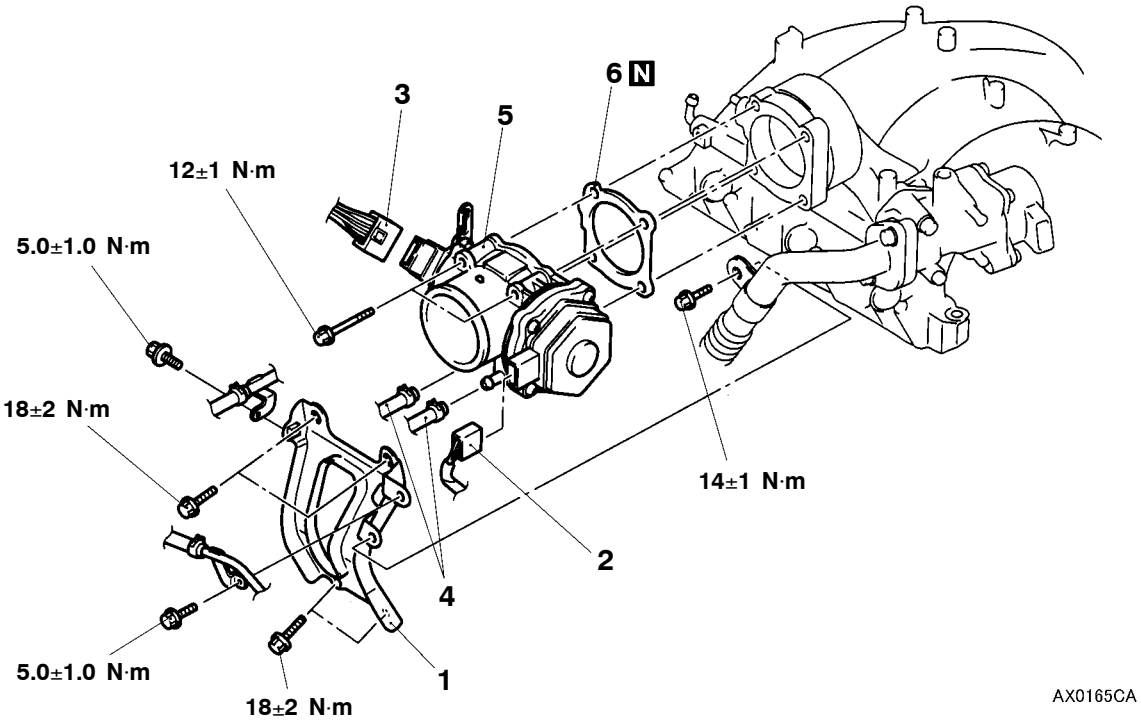


**Removal steps**

1. Throttle body stay
2. Throttle control servo connector connection
3. Throttle position sensor connector connection
4. Water hose connection
5. ▶B◀ Throttle body assembly
6. ▶A◀ Throttle body gasket

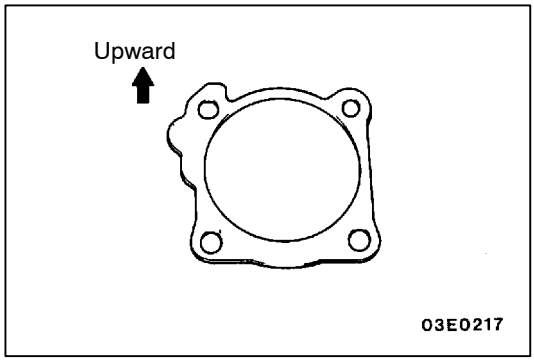


## INSTALLATION SERVICE POINTS

### ▶A◀ THROTTLE BODY GASKET INSTALLATION

The projection on the gasket should face upward.

Purchased from www.WorkshopManuals.co.uk

www.WorkshopManuals.co.uk

### ▶B◀ THROTTLE BODY INSTALLATION

If the throttle body is replaced, initialize the electronic-controlled throttle valve system.

**Initialization**

Turn on the ignition switch, and turn it to the LOCK (OFF) position within one second. Then leave it for at least ten seconds with the ignition switch in the LOCK (OFF) position.

Purchased from www.WorkshopManuals.co.uk

www.WorkshopManuals.co.uk

## DISASSEMBLY AND REASSEMBLY

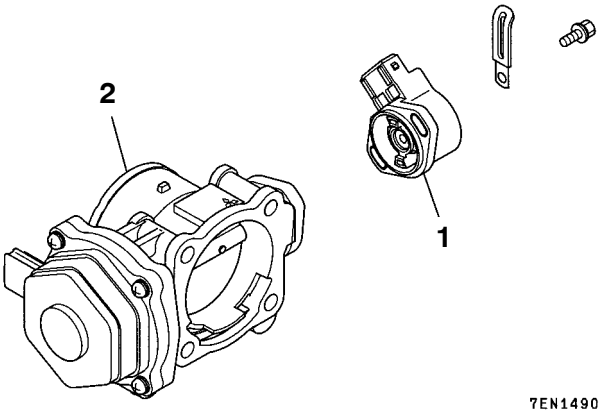


**Disassembly steps**

▶A◀ 1. Throttle position sensor
2. Throttle body

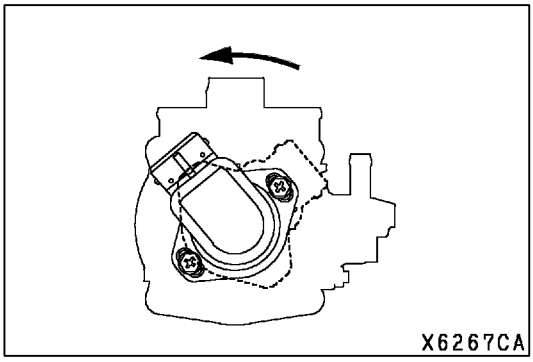


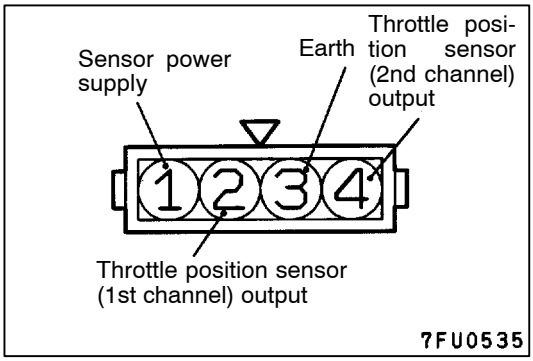


## REASSEMBLY SERVICE POINTS

### ▶A◀ THROTTLE POSITION SENSOR

1. Position the throttle position sensor on the throttle body along the dotted line as shown in the illustration.
2. Rotate the throttle position sensor anticlockwise as shown in the illustration, and then tighten the screws.
3. Measure resistance value between terminal Nos. 1 (sensor power supply) and 2 (throttle position sensor 1st-channel output) as well as 1 (sensor power supply) and 4 (throttle position sensor 2nd channel output).

**Normal condition**

| | |
|---|---|
| Open the throttle valve slowly from the idle position to full-open position. | Resistance value changes smoothly in response to throttle valve opening angle. |

4. If the resistance value does not change smoothly, replace the throttle position sensor.

Purchased from www.WorkshopManuals.co.uk

www.WorkshopManuals.co.uk

# INJECTOR DRIVER

## REMOVAL AND INSTALLATION

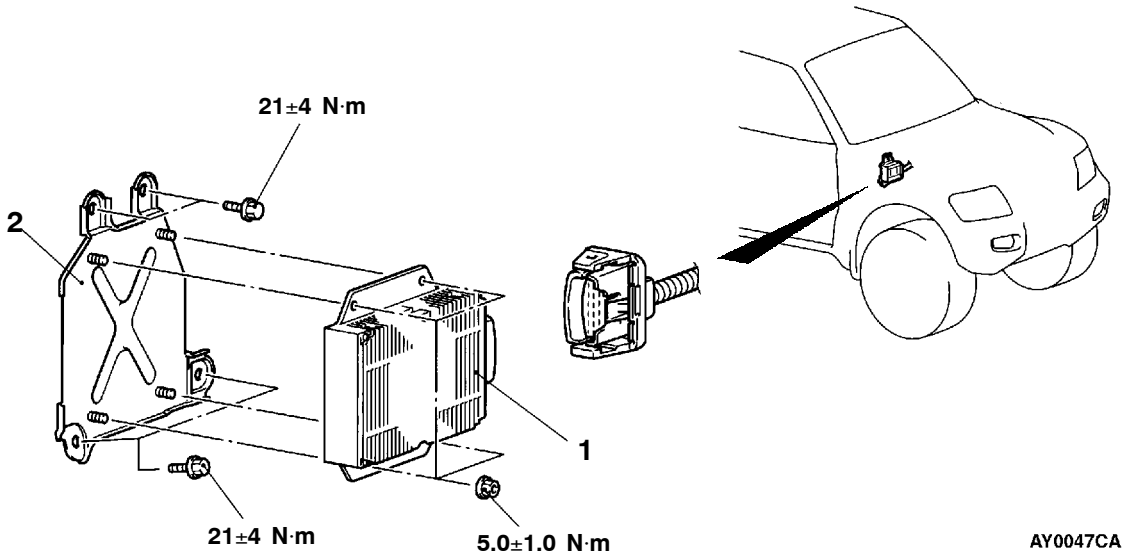


**Removal steps**

◀A▶ 1. Injector driver
2. Bracket

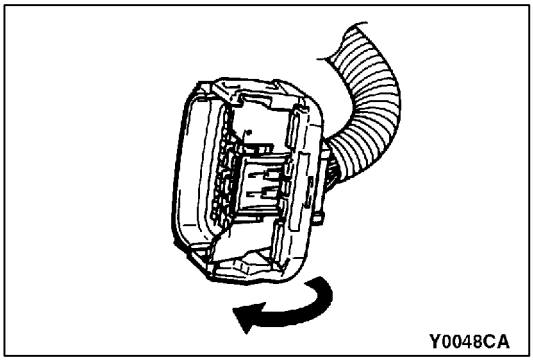


## REMOVAL SERVICE POINT

### ◀A▶ INJECTOR DRIVER REMOVAL

Press the injector driver connector in the place shown in the illustration to disconnect the injector driver connector.

**Caution**

1. **Disconnect the negative cable from its terminal before carrying out this operation.**
2. **High-tension current is flowing in the harness between the injector driver and the injector while engine is running, and the injector driver will become hot after the vehicle has been driven, so take care when handling it.**

Purchased from www.WorkshopManuals.co.uk

www.WorkshopManuals.co.uk

# ENGINE-ECU<M/T>, ENGINE-A/T-ECU<A/T>, THROTTLE VALVE CONTROLLER

## REMOVAL AND INSTALLATION

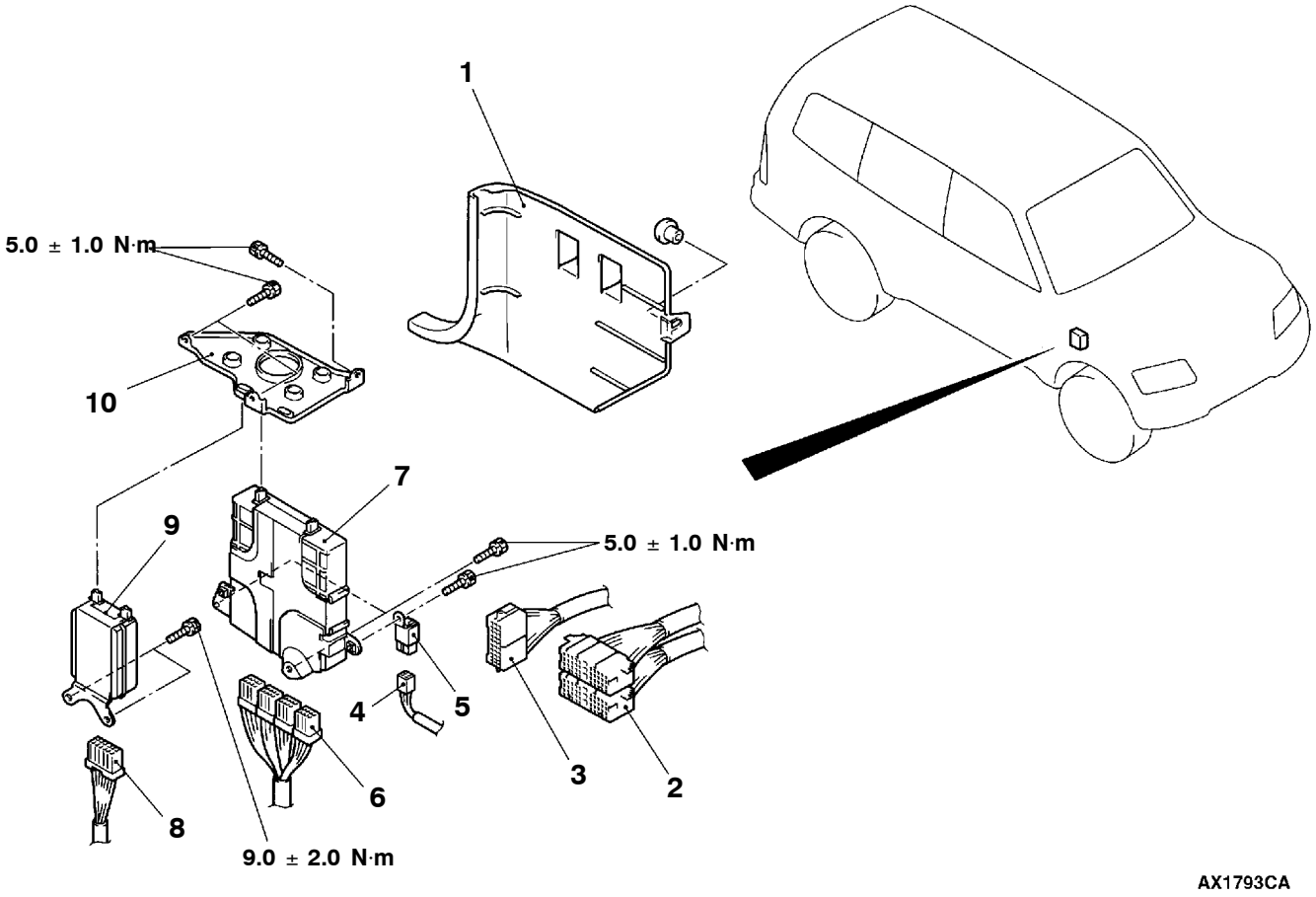


**Removal steps**

1. Cowl side trim
2. Instrument panel harness and front door harness connection
3. Instrument panel harness and front floor harness connection
4. A/T control relay connector <A/T>
5. A/T control relay <A/T>
6. Engine-ECU <M/T>, Engine□A/T-ECU <A/T> connector
7. Engine-ECU <M/T>, Engine□A/T-ECU <A/T>
8. Throttle valve controller connector
9. ▶A◀ Throttle valve controller Instrument panel (Refer to GROUP 52A.)
10. Bracket

## INSTALLATION SERVICE POINT

### ▶A◀ THROTTLE VALVE CONTROLLER INSTALLATION

If the throttle valve controller is replaced, initialize the electronic-controlled throttle valve system.

**Initialization**

Turn on the ignition switch, and turn it to the LOCK (OFF) position within one second. Then leave it for at least ten seconds with the ignition switch in the LOCK (OFF) position.

Purchased from www.WorkshopManuals.co.uk

www.WorkshopManuals.co.uk

# Service Bulletins

**Click on the applicable bookmark to select the Service Bulletin.**

Purchased from www.WorkshopManuals.co.uk

www.WorkshopManuals.co.uk

MITSUBISHI MOTORS

# SERVICE BULLETIN

**QUALITY INFORMATION ANALYSIS**
**OVERSEAS SERVICE DEPT. MITSUBISHI MOTORS CORPORATION**

| SERVICE BULLETIN | **No.:** MSB-00E13-001 | |
|---|---|---|
| | **Date:** 2001-06-03 | |

| **Subject:** | AVAILABILITY OF DRIVE CYCLE PATTERNS FOR 2001 MODEL CARS | **<Model>** | **<M/Y>** |
|---|---|---|---|
| **Group:** | FUEL | **Draft No.:** 00AL602317 | (EC)GALANT(EA0)<br>(EC)SPACE STAR<br>(EC) SPACE RUNNER/SPACE WAGON(N80, N90)<br>(EC)PAJERO SPORT (K80W,K90W)<br>(EC)PAJERO/ MONTERO (V60, V70)<br>(EC)CARISMA<br>(EC)PAJERO PININ (H60,H70) |
| **INFORMATION** | **INTERNATIONAL CAR ADMINISTRATION OFFICE** | T.MASAKI-MANAGER<br>TECHNICAL SERVICE PLANNING | |

**1. Description:**

On the 2001 model cars equipped with the on-board diagnostics system, the drive cycle patterns have been made available.
Performing the running test of the car using these drive cycle patterns makes it possible to monitor all the diagnosis codes that are required for operation of the car in order to determine if the applicable system is operating properly or not.

Purchased from www.WorkshopManuals.co.uk

www.WorkshopManuals.co.uk

**2. Applicable Manuals:**

| Manual | Pub. No. | Language | Page(s) |
|---|---|---|---|
| 2001 GALANT<br>Workshop Manual Supplement | PWDE9611-B | (English) | 4G64-GDI:13I-8<br>4G63-MPI:13A-7<br>6A13-MPI:13A-97 |
| | PWDS9612-B | (Spanish) | |
| | PWDF9613-B | (French) | |
| | PWDG9614-B | (German) | |
| | PWDD9615-B | (Dutch) | |
| | PWDW9616-B | (Swedish) | |
| 2001 SPACE RUNNER/ SPACE WAGON<br>Workshop Manual Supplement | PWDE9803-C | (English) | 4G64-GDI:13A-9<br>4G63-MPI:13D-12 |
| | PWDS9804-C | (Spanish) | |
| | PWDF9805-C | (French) | |
| | PWDG9806-C | (German) | |
| | PWDD9807-C | (Dutch) | |
| | PWDW9808-C | (Swedish) | |
| 2001 CARISMA<br>Workshop Manual Supplement | PWDE9502-E | (English) | 4G93-GDI:13J-8<br>4G92-MPI:13A-7 |
| | PWDS9503-E | (Spanish) | |
| | PWDF9504-E | (French) | |
| | PWDG9505-E | (German) | |
| | PWDD9506-E | (Dutch) | |
| | PWDW9507-E | (Swedish) | |
| 2001 SPACE STAR<br>Workshop Manual Supplement | CMXE99E1-A | (English) | 4G93-GDI:13A-9<br>4G13-MPI:13B-7 |
| 2001 COLT<br>Workshop Manual Supplement | PWME9511-C | (English) | 4G13-MPI:13A-7<br>4G93-MPI:13A-88 |
| | PWMS9512-C | (Spanish) | |
| | PWMF9513-C | (French) | |
| | PWMG9514-C | (German) | |
| | PWMD9515-C | (Dutch) | |
| | PWMW9516-C | (Swedish) | |
| 2001 PAJERO<br>Workshop Manual VOL1 | PWJE0001(1/2) | (English) | 6G74-GDI:13A-12 |
| 2001 MONTERO<br>Workshop Manual VOL1 | PWJS0002(1/2) | (Spanish) | |
| 2001 PAJERO/MONTERO<br>Workshop Manual CD-ROM | PWJT0008R | (English) | |
| | | (Spanish) | |
| | | (French) | |
| | | (German) | |
| 2001 PAJERO SPORT<br>Workshop Manual Supplement | PWJE9812-B | (English) | 6G72-MPI:13A-8 |
| | PWJS9813-B | (Spanish) | |
| | PWJF9814-B | (French) | |
| | PWJG9815-B | (German) | |
| 2001 PAJERO PININ<br>Workshop Manual Supplement | CKRE99E1-A | (English) | 4G93-GDI: 13A-9 |



Purchased from www.WorkshopManuals.co.uk

www.WorkshopManuals.co.uk

# DRIVE CYCLE

Performing the running test of the car using the following five drive cycle patterns makes it possible to monitor all the diagnosis codes that are required for operation of the car in order to determine if the applicable system is operating properly or not.
In other words, doing such a drive allows to regenerate any kind of trouble which involves illuminating the Engine Warning Lamp (Check Engine Lamp) and to verify the repair procedure has eliminated the trouble [the Engine Warning Lamp (Check Engine Lamp) is no longer illuminated].

**Caution**
**Two technicians should always be in the vehicle when carrying out a test drive.**

NOTE
Check that the diagnosis code is not output before traveling in the Drive cycle pattern. Erase the diagnosis code if it has been output.

## DRIVE CYCLE PATTERN LIST

| PROCEDURE | MONITOR ITEM | DIAGNOSIS CODE |
|---|---|---|
| 1 | Catalytic converter monitor | P0420 |
| | Heated oxygen sensor <front> monitor | P0130 |
| 2 | Fuel trim monitor | P0170 |
| 3 | Feed back monitor | P0125 |
| 4 | Other monitor | P0136, P0201, P0202, P0203, P0204, P0205, P0206, P0300, P0301, P0302, P0303, P0304, P0305, P0306, P0325 |

NOTE
The vehicle speed sensor (P0500) and the power steering fluid pressure switch (P0551) are used to determine if the system is operating properly or not through use of the Data List function of the MUT-II.


Purchased from www.WorkshopManuals.co.uk

www.WorkshopManuals.co.uk

## PROCEDURE 1

| | |
|---|---|
| monitor item | **CATALYTIC CONVERTER MONITOR (P0420)**<br>**OXYGEN SENSOR <FRONT> MONITOR (P0130)** |
| Drive cycle pattern | One trip monitor [from start to ignition switch to “LOCK” (OFF) position] will be completed while traveling with the following drive cycle pattern. It will take 10 minutes or more.<br> 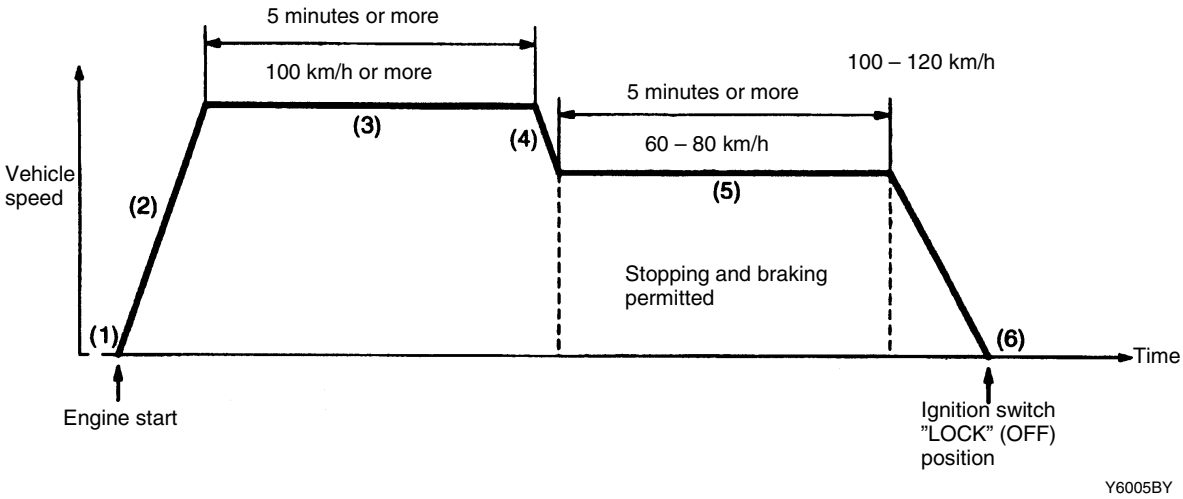 <br> |
| Inspection conditions | • Atmospheric temperature : -10 °C or more<br>• Condition of A/T :Selector lever D range, overdrive switch “ON” position |
| Test procedure | 1. Engine : start<br>2. Accelerate until the vehicle speed is 100 km/h or more.<br>3. Travel for 5 minutes or more while keeping the vehicle speed is 100 km/h or more.<br>4. Decelerate until the vehicle speed is 60 - 80 km/h or less.<br>5. While keeping the accelerator pedal opening degree constant, keep the vehicle speed at 60 - 80 km/h and travel for 5 minutes or more.<br>• Stopping and braking during this operation are permitted.<br>6. Return the vehicle to the shop, then turn the ignition switch ”LOCK” (OFF) position. |


Purchased from www.WorkshopManuals.co.uk

www.WorkshopManuals.co.uk

## PROCEDURE 2

| monitor item | **FUEL TRIM MONITOR (P0170)** |
|---|---|
| Drive cycle pattern | One trip monitor [from start to ignition switch to “LOCK” (OFF) position] will be completed while traveling with the following drive cycle pattern. It will take 15 minutes or more.<br> 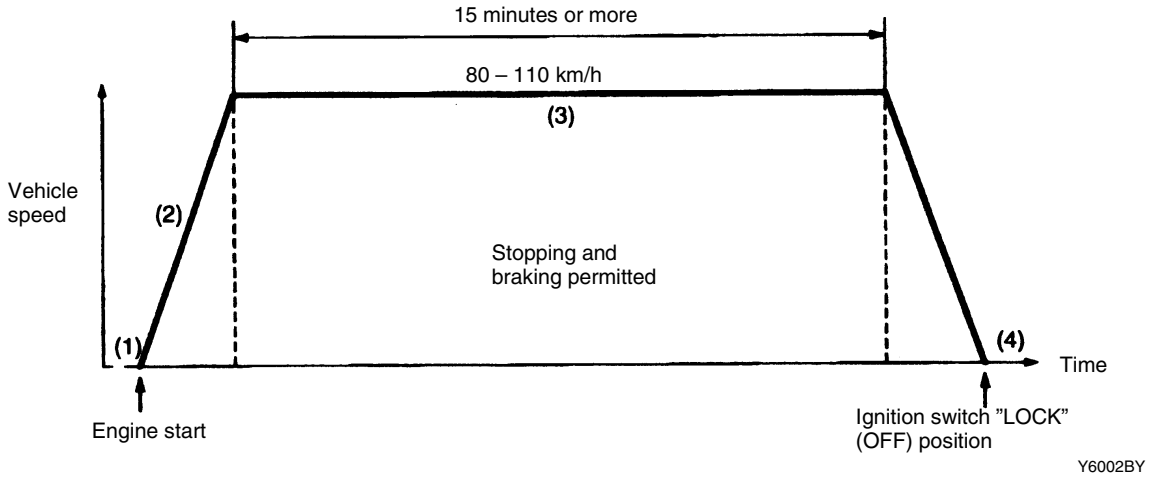 <br> |
| Inspection conditions | • Engine coolant temperature : 85 °C or more<br>• Atmospheric temperature : -10 °C or more<br>• Condition of A/T :Selector lever D range, overdrive switch “ON” position |
| Test procedure | 1. Engine : start<br>2. Accelerate until the vehicle speed is 80 – 110 km/h.<br>3. While keeping the accelerator pedal opening degree constant, keep the vehicle speed at 80 – 110 km/h and travel for 15 minutes or more.<br>4. Return the vehicle to the shop, then turn the ignition switch “LOCK” (OFF) position. |


Purchased from www.WorkshopManuals.co.uk

www.WorkshopManuals.co.uk

## PROCEDURE 3

| monitor item | **FEED BACKK MONITOR (P0125)** |
|---|---|
| Drive cycle pattern | One trip monitor [from start to ignition switch to “LOCK” (OFF) position] will be completed while traveling with the following drive cycle pattern. It will take 5 minutes or more.<br> 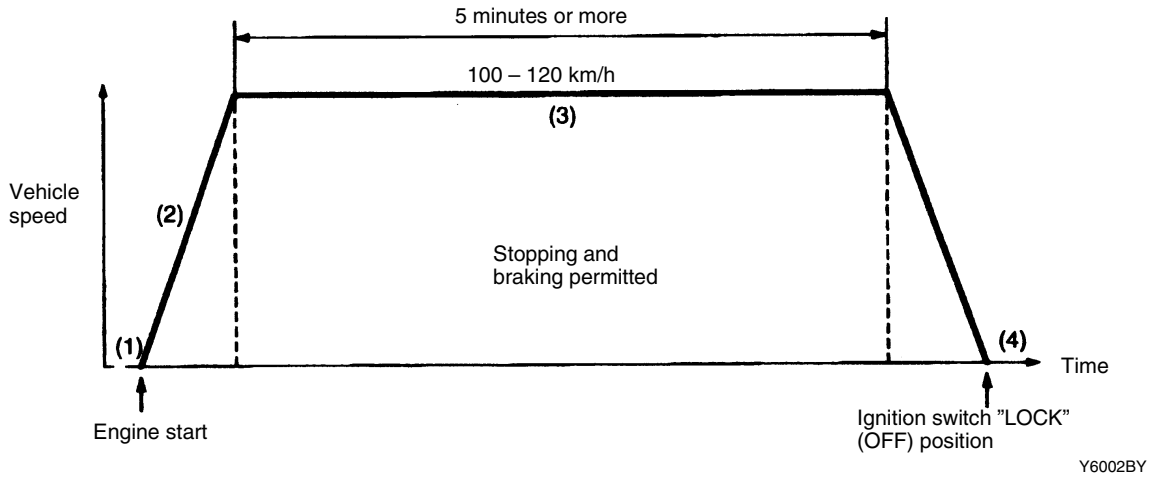 <br> |
| Inspection conditions | • Engine coolant temperature : 85 °C or more<br>• Atmospheric temperature : -10 °C or more<br>• Condition of A/T :Selector lever D range, overdrive switch “ON” position |
| Test procedure | 1. Engine : start<br>2. Accelerate until the vehicle speed is 100 – 120 km/h.<br>3. While keeping the accelerator pedal opening degree constant, keep the vehicle speed at 100 – 120 km/h and travel for 5 minutes or more.<br>4. Return the vehicle to the shop, then turn the ignition switch “LOCK” (OFF) position. |


Purchased from www.WorkshopManuals.co.uk

www.WorkshopManuals.co.uk

## PROCEDURE 4

| monitor item | **OTHER MONITOR** |
|---|---|
| Diagnosis code No. | P0136, P0201, P0202, P0203, P0204, P0205, P0206, P0300, P0301, P0302, P0303, P0304, P0305, P0306, P0325 |
| Drive cycle pattern | One trip monitor [from start to ignition switch to “LOCK” (OFF) position] will be completed while traveling with the following drive cycle pattern. It will take 6 minutes or more.<br> 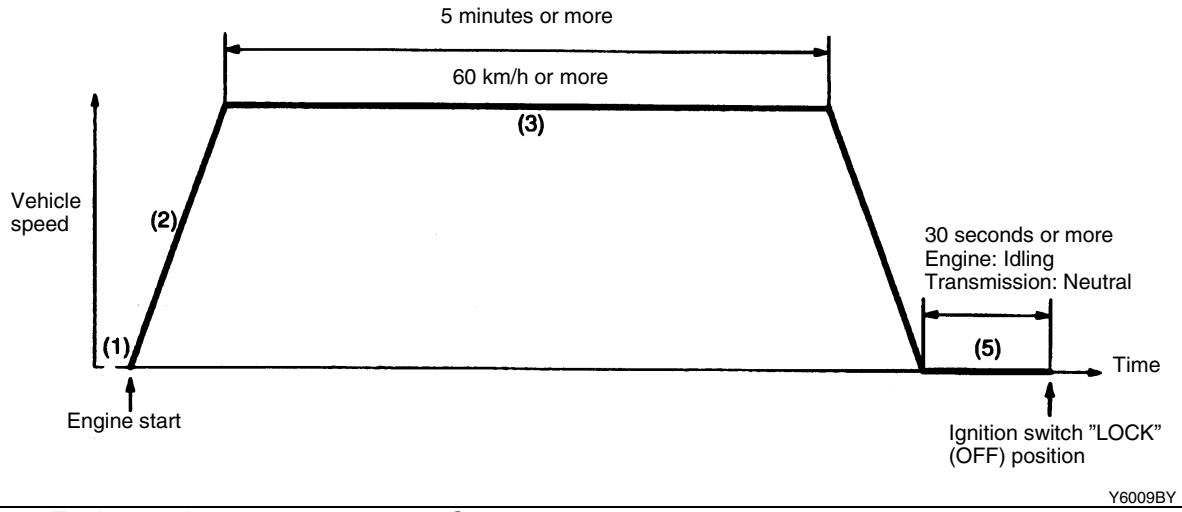 <br> |
| Inspection conditions | • Engine coolant temperature : 85 °C or more<br>• Atmospheric temperature : -10 °C or more<br>• Condition of A/T :Selector lever D range, overdrive switch “ON” position |
| Test procedure | 1. Engine : start<br>2. Accelerate until the vehicle speed is 60 km/h.<br>3. While keeping the accelerator pedal opening degree constant, keep the vehicle speed at 60 km/h or more and travel for 5 minutes or more.<br>4. Return the vehicle to the shop<br>5. After stopping the vehicle, continue idling for 30 seconds, and then turn the ignition switch to ”LOCK” (OFF) position.<br>• A/C switch : OFF<br>• Light and all accessories: OFF<br>• Transmission : Neutral |


Purchased from www.WorkshopManuals.co.uk

www.WorkshopManuals.co.uk

# GASOLINE DIRECT INJECTION (GDI)

## CONTENTS

**GENERAL . . . . . 3**
Outline of Change . . . . . 3
**GENERAL INFORMATION . . . . . 3**
General Specifications . . . . . 3

Purchased from www.WorkshopManuals.co.uk

www.WorkshopManuals.co.uk

# GENERAL

## OUTLINE OF CHANGE

The engine-ECU <M/T> and engine-A/T-ECU <A/T>, which feature communication port with stability control system, have been introduced. The service procedures for these ECUs are the same as before.

# GENERAL INFORMATION

## GENERAL SPECIFICATIONS

| Items | | Specifications |
|---|---|---|
| Engine-ECU <M/T> | Identification No. | E2T79275 <LHD><br>E2T79276 <RHD> |
| Engine-A/T-ECU <A/T> | Identification No. | E2T76290 <LHD><br>E2T76291 <RHD> |

Purchased from www.WorkshopManuals.co.uk

www.WorkshopManuals.co.uk

# GASOLINE DIRECT INJECTION (GDI)

## CONTENTS

**GENERAL** . . . . . 3
Outline of Changes . . . . . 3
**GENERAL INFORMATION** . . . . . 3
**TROUBLESHOOTING** . . . . . 3
**ON-VEHICLE SERVICE** . . . . . 7
Oxygen Sensor Check . . . . . 7

Purchased from www.WorkshopManuals.co.uk

www.WorkshopManuals.co.uk

# GENERAL

## OUTLINE OF CHANGES

Due to the changes as shown below, the service procedures regarding the different description from the previous version have been established.

- On M/T, the engine-ECU has been changed as diagnosis code P1603 has been added.
- On A/T, the engine-A/T-ECU has been changed as an on-board diagnosis system has been adopted. The engine warning lamp control, the diagnosis function, the service data output and the actuator test are basically the same as for M/T.
- On A/T, an dual oxygen sensor has been adopted. This sensor is the same as for the previous M/T.

# GENERAL INFORMATION

## GENERAL SPECIFICATIONS

| Items | | Specifications |
|---|---|---|
| Engine-ECU <M/T> | Identification No. | E2T79277 <LHD><br>E2T79278 <RHD> |
| Engine-A/T-ECU <A/T> | Identification No. | E2T76292 <LHD><br>E2T76293 <RHD> |

# TROUBLESHOOTING

## DIAGNOSIS FUNCTION

### ENGINE WARNING LAMP (CHECK ENGINE LAMP)

The following item has been added as diagnosis code P1603 has been added. The other items are the same as before.

**Engine warning lamp inspection items**

| Code No. | Diagnosis item |
|---|---|
| P1603 | Battery backup line malfunction |

## INSPECTION CHART FOR DIAGNOSIS CODES

Diagnosis code P1603 has been added. The other codes are the same as for the previous M/T.

| Code No. | Diagnosis item | Reference page |
|---|---|---|
| P1603 | Battery backup line malfunction | 13A-4 |

Purchased from www.WorkshopManuals.co.uk

www.WorkshopManuals.co.uk

## INSPECTION PROCEDURE CLASSIFIED BY DIAGNOSIS CODE

| Code No. P1603 Battery backup line malfunction | Probable cause |
|---|---|
| Range of Check<br>● Starting sequence was completed.<br>● The battery voltage is 10 V or more.<br>Set Condition<br>● Battery backup line voltage is less than 2 V. | ● Open or short circuit in the battery back-up line or loose connector contact<br>● Malfunction of engine-ECU <M/T><br>● Malfunction of engine-A/T-ECU <A/T><br>NOTE: If the engine is started while the ignition-off current draw connector has been pulled off, the engine-ECU <M/T> or the engine-A/T-ECU <A/T> judges that the battery backup line is open, and illuminates the engine warning lamp and stores this diagnosis code. |

**MUT-II Self-Diag Code**
Is code No. P1603 set?

- NO → Intermittent malfunction (Refer to GROUP 00 - Points to Notes for Intermittent Malfunction).
- YES ↓

Measure at engine-ECU connector D-117 <M/T> or engine-A/T-ECU connector D-120 <A/T>.
- Disconnect the connector, and measure at the harness side.
- The voltage between terminal No.60 <M/T> or 66 <A/T> and earth
  **OK:** System voltage

- NG → **Check the following connectors:** E-13, D-27, D-31 <L.H. drive vehicles>, D-223 <L.H. drive vehicles>
  - OK ↓
  - NG → **Repair**
  - Check the harness wire between the battery and the engine-ECU <M/T> or engine-A/T-ECU <A/T>, and repair if necessary.
- OK ↓

**Check the following connector:** D-117 <M/T>, D-120 <A/T>

- OK ↓
- NG → **Repair**

Check the harness wire between the battery and the engine-ECU <M/T> or engine-A/T-ECU, and repair if necessary.

- OK ↓
- NG → **Repair**

Check the trouble symptoms.

- NG ↓

Replace the engine-ECU <M/T> or engine-A/T-ECU <A/T>.

Purchased from www.WorkshopManuals.co.uk

www.WorkshopManuals.co.uk

## DATA LIST REFERENCE TABLE

The data list has been changed as the engine-ECU and the engine-A/T-ECU have been changed. The other items are the same as for M/T.

| Item No. | Inspection item | Inspection contents | | Normal condition | Inspection procedure No. | Reference page |
|---|---|---|---|---|---|---|
| 22 | Crank angle sensor | • Engine: Cranking<br>• Tachometer: Connected | Compare the engine speed readings on the tachometer and the MUT-II. | Accord | Code No. P0335 | 13A-56* |
| | | • Engine: Idling<br>• Idle position switch: ON | When engine coolant temperature is -20°C | 1,300 - 1,500 r/min | | |
| | | | When engine coolant temperature is 0°C | 1,300 - 1,500 r/min | | |
| | | | When engine coolant temperature is 20°C | 1,250 - 1,450 r/min | | |
| | | | When engine coolant temperature is 40°C | 1,100 - 1,300 r/min | | |
| | | | When engine coolant temperature is 80°C (more than four minutes later after engine has started) | 600 - 800 r/min | | |
| A1★ | Oxygen sensor | Engine: After having warmed up. (Air/fuel mixture is made leaner when decelerating, and is made richer when racing.) | When at 4,000 r/min, engine is decelerated | 200 mV or less | Code No. P0130 | 13A-28* |
| | | | Rev the engine. | 600 - 1000 mV | | |
| | | Engine: After having warmed up (The oxygen sensor signal is used to check the air/fuel mixture ratio, and control condition is also check by the engine-ECU <M/T> or engine-A/T-ECU <A/T>.) | Engine is idling (more than 4 minutes later after engine has started) | Voltage should alternate between 400 mV or less and 600 - 1,200 mV (more than 4 minutes after the engine has started). | | |
| | | | 2,500 r/min | | | |
| 24★ | Vehicle speed sensor | Drive at 40 km/h | | Approximately 40 km/h | Code No. P0500 | 13A-63* |

Purchased from www.WorkshopManuals.co.uk

www.WorkshopManuals.co.uk

| Item No. | Inspection item | Inspection contents | | Normal condition | Inspection procedure No. | Reference page |
|---|---|---|---|---|---|---|
| 81★ | Learned value | Engine: Warm, 2,500 r/min without any load (during closed loop lambda control) | | -10 - 10 % | Code No. P0170 | 13A-34* |
| 82★ | Closed loop control | Engine: Warm, 2,500 r/min without any load (during closed loop lambda control) | | -25 - 25 % | Code No. P0170 | 13A-34* |
| 87★ | Engine load | Engine: After having warmed up | Idling (more than 4 minutes later after the engine has started) | 20 - 40 % | - | - |
| | | | 2,500 r/min | 10 - 30 % | | |
| 8A★ | Throttle position sensor (1st channel) (throttle valve angle) | ● Engine: After having warmed up<br>● Ignition switch: ON (Engine: stopped) | Release the accelerator pedal. | 0 - 20 % | Code No. P0120 | 13A-25* |
| | | | Depress the accelerator pedal. | Increase in proportion to the pedal stroke | | |
| | | | Depress the accelerator pedal fully. | 80 - 100 % | | |

NOTE
★: will not displayed if service data is selected on the check mode.
*: Refer to the 2001 PAJERO Workshop Manual (Pub.No. PWJE0001)

Purchased from www.WorkshopManuals.co.uk

www.WorkshopManuals.co.uk

## CHECK AT THE ENGINE-ECU TERMINALS

### TERMINAL VOLTAGE CHECK CHART <A/T>

#### Engine-A/T-ECU Connector Terminal Arrangement

The terminals below have been changed as the engine-A/T-ECU has been changed. The other terminals are the same as before.

| Terminal No. | Check item | Check requirements (Engine condition) | Normal condition |
|---|---|---|---|
| 3 | Oxygen sensor heater (front) | Engine: Idling | 0 - 3 V |
| | | Engine: 3,500 r/min | System voltage |
| 26 | Oxygen sensor heater (rear) | Engine: Idling | 0 - 3 V |
| | | Engine: 3,500 r/min | System voltage |
| 71 | Oxygen sensor (front) | Engine: Warmed up, and then hold the engine speed at 2,500 r/min (Use a digital voltmeter) | 0 and 0.8 V alternate. |
| 73 | Oxygen sensor (rear) | ● Transmission: 2nd gear<br>● Engine speed: 3,500 r/min or more<br>● Driving with the throttle valve widely open | 0.6 - 1.0 V |

#### Engine-A/T-ECU Harness-side Connector Terminal Arrangement

The terminals below have been changed as the engine-A/T-ECU has been changed. The other terminals are the same as before.

| Terminal No. | Check item | Standard value, normal condition (check conditions) |
|---|---|---|
| 3 - 41 | Oxygen sensor heater (front) | 11 - 18 Ω (at 20°C) |
| 26 - 41 | Oxygen sensor heater (rear) | 11 - 18 Ω (at 20°C) |

# ON-VEHICLE SERVICE

## OXYGEN SENSOR CHECK

On A/T, a dual oxygen sensor has been adopted. Its service procedure is the same as for the previous M/T.

Purchased from www.WorkshopManuals.co.uk

www.WorkshopManuals.co.uk

**NOTES**

Purchased from www.WorkshopManuals.co.uk

www.WorkshopManuals.co.uk

# DIESEL FUEL <4D5>

**Click on the applicable bookmark to selected the required model year.**

Purchased from www.WorkshopManuals.co.uk

www.WorkshopManuals.co.uk


# DIESEL FUEL <4D5>

## CONTENTS

**GENERAL INFORMATION** . . . . . 2

**SERVICE SPECIFICATIONS** . . . . . 2

**SPECIAL TOOL** . . . . . 2

**ON-VEHICLE SERVICE** . . . . . 2

Fuel Injection Timing Check and Adjustment . . . 2

Engine Idle Speed Check and Adjustment . . . . . 2

Evacuation of Water from Fuel Filter . . . . . 2

Evacuation of Air from Fuel Line . . . . . 3

Fuel Filter Cartridge Replacement . . . . . 3

Fuel Injection Pump Check . . . . . 3

Boost Compensator Check . . . . . 4

Injection Nozzle Check and Adjustment . . . . . 4

**INJECTION NOZZLE** . . . . . 6

**INJECTION PUMP** . . . . . 10

Purchased from www.WorkshopManuals.co.uk

www.WorkshopManuals.co.uk

# GENERAL INFORMATION

The fuel is drawn out of the fuel tank by means of the feed pump which is built into the fuel injection pump. It then passes through the fuel filter and is fed to the injection pump.
The fuel is pressurized by the feed pump, and this fuel pressure is controlled by the regulating valve which is built into the pump. Then, the fuel is compressed by the plunger and injected from the nozzles at high pressure in accordance with the injection sequence.

Engine speed (fuel injection amount) control is carried out by means of a centrifugal-type governor using a flyweight.
Fuel injection timing control is carried out by a hydraulic timer. The hydraulic timer operates by the fuel pressure inside the pump chamber. This pressure is controlled by the regulating valve.

# SERVICE SPECIFICATIONS

| Items | Standard value |
|---|---|
| Injection timing control solenoid coil resistance Ω | 8 - 10 |
| Fuel injection initial pressure kPa | 14,710 - 15,690 |

# SPECIAL TOOL

| Tool | Number | Name | Use |
|---|---|---|---|
| 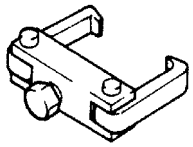 | MD998388 | Injection pump sprocket puller | Fuel injection pump sprocket removal |

# ON-VEHICLE SERVICE

## FUEL INJECTION TIMING CHECK AND ADJUSTMENT

Refer to GROUP 11B - On-vehicle Service.

## ENGINE IDLE SPEED CHECK AND ADJUSTMENT

Refer to GROUP 11B - On-vehicle Service.

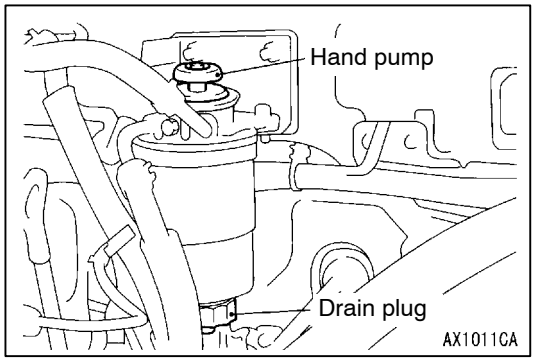


## EVACUATION OF WATER FROM FUEL FILTER

Water is in the filter when fuel filter warning lamp lights. Evacuate water by the following procedures.
1. Loosen drain plug.
2. Drain water with hand pump. Finger-tighten drain plug.

Purchased from www.WorkshopManuals.co.uk

www.WorkshopManuals.co.uk

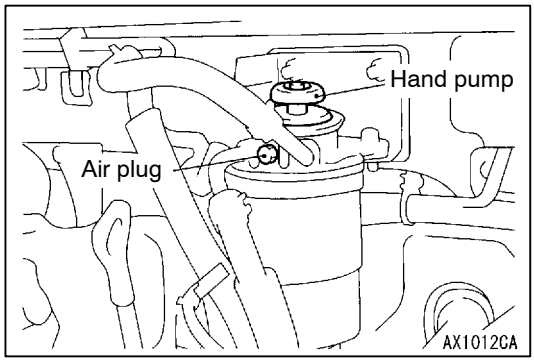


## EVACUATION OF AIR FROM FUEL LINE

Bleed the air from the fuel line after refilling the fuel.

- When fuel is drained for service.
- When fuel filter is replaced.
- When main fuel line is removed.

1. Loosen fuel filter air plug.
2. Place rags around air plug hole. Operate hand pump repeatedly until no bubbles come from plug hole. Tighten air plug.
3. Repeat until hand pump operation becomes stiff.

## FUEL FILTER CARTRIDGE REPLACEMENT

Refer to GROUP 13D.

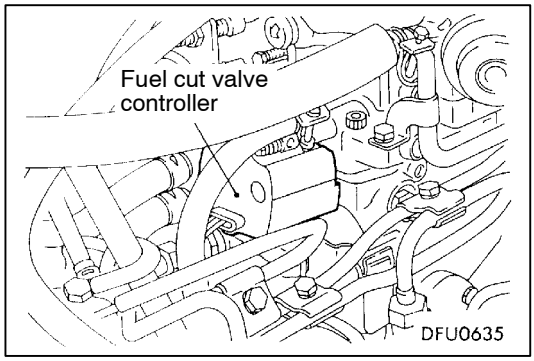


## FUEL INJECTION PUMP CHECK

### FUEL CUT VALVE CONTROLLER OPERATION CHECK

When a sound scope is held against the fuel cut valve controller and the ignition switch is turned to “ON”, check that the sound of the valve operating can be heard.
If no operating sound can be heard, check the immobilizer system while referring to GROUP 54.

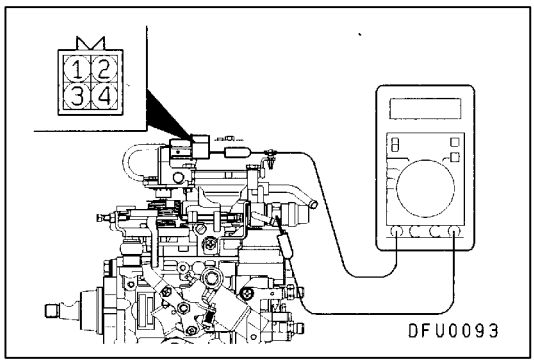


### INJECTION TIMING CONTROL SOLENOID COIL RESISTANCE CHECK

Measure the resistance between the injection pump connector terminal No.4 (injection timing control solenoid terminal) and the injection pump body.

**Standard value: 8 - 10 Ω (at 20 °C)**

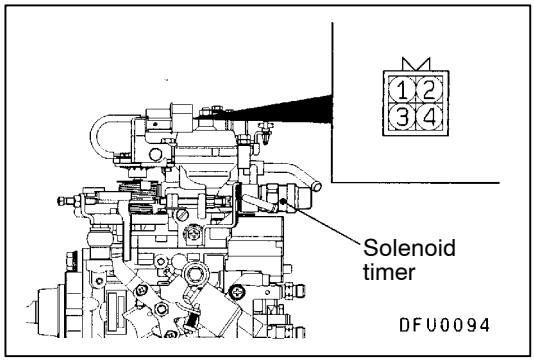


### INJECTION TIMING CONTROL SOLENOID OPERATION CHECK

Check that operation sound of the injection timing control solenoid can be heard when connecting the injection pump connector terminal No.4 (injection timing control solenoid terminal) and the battery positive terminal.

Purchased from www.WorkshopManuals.co.uk

www.WorkshopManuals.co.uk

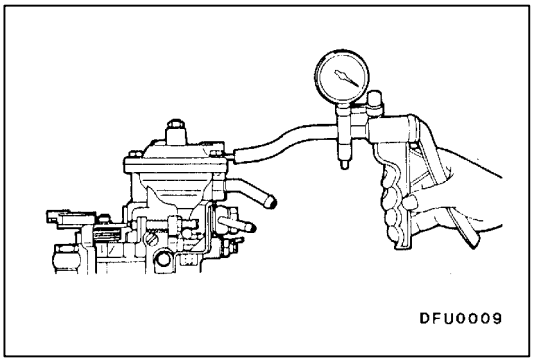


## BOOST COMPENSATOR CHECK

1. Connect a hand pump (pressurization type) to the nipple of the boost compensator.
2. Apply 30 kPa of pressure and check to be sure that the pressure is maintained.

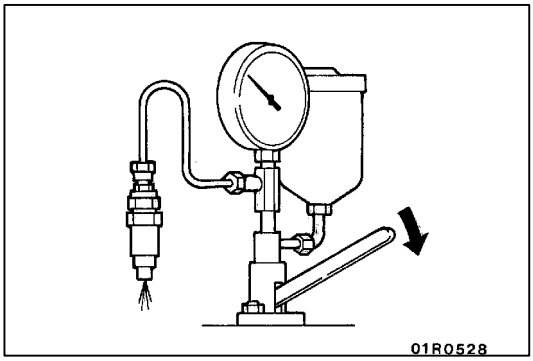


## INJECTION NOZZLE CHECK AND ADJUSTMENT

**Caution**
**Never touch the injection spray that is injected from the nozzle.**

### FUEL INJECTION INITIAL PRESSURE CHECK

1. Install the injection nozzle to a nozzle tester.
2. Move the lever of the nozzle tester 2 - 3 times to inject fuel and to bleed the air.
3. Gently press down the lever of the nozzle tester, and take a reading of the indication value on the pressure gauge at the point where the needle slowly rises and then suddenly drops.

   **Standard value (Fuel injection initial pressure): 14,710 - 15,690 kPa**

4. If the fuel injection initial pressure is outside the standard value, disassembly the nozzle holder to clean it, and then change the thickness of the shim to adjust the fuel injection initial pressure.

   NOTE
   (1) For disassembly, reassembly and adjustment of the nozzle holder, refer to P.13B-8.
   (2) There are 10 shims for adjustment, with thicknesses in the range of 0.10 - 0.80 mm.
   (3) When the shim thickness is increased by 0.1 mm, the fuel injection initial pressure increases by 2,350 kPa.

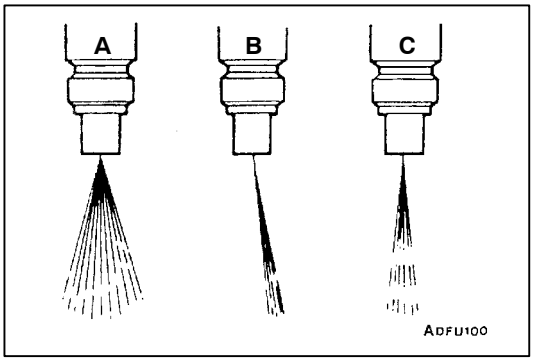


### INJECTION SPRAY CONDITION CHECK

1. Move the lever of the nozzle tester rapidly (4 - 6 times per second) to eject the fuel continuously. Check to be sure that the injection spray comes out evenly in a cone shape (injection spray angle is 10 °). The injection spray patterns shown in the illustration at left are wrong.
   A. Injection angle is tool large
   B. Bias
   C. Intermittent fuel injection

Purchased from www.WorkshopManuals.co.uk

www.WorkshopManuals.co.uk

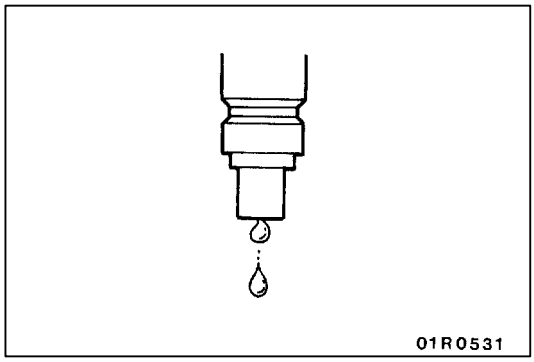


2. Check to be sure that no fuel drips after injection is completed.
3. If there are any drips, disassemble the nozzle, clean it and reinspect, or replace the nozzle.

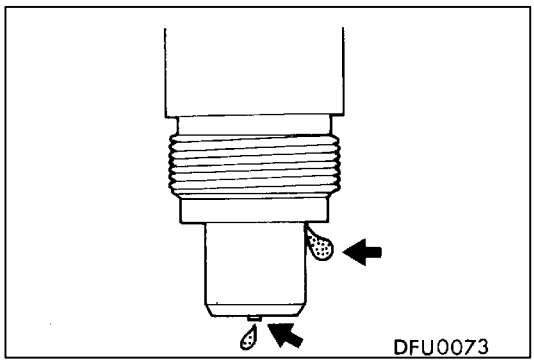


**NOZZLE FUEL-TIGHT CHECK**

1. Gently raise the lever of the nozzle tester until the pressure inside the nozzle (value displayed on pressure gauge) becomes 12,750 - 13,730 kPa, and after holding this pressure for approximately 10 seconds, check to be sure that there are no fuel leaks from the nozzle.
2. If there are any leaks, disassemble the injection nozzle, clean it and re-inspect, or replace the nozzle.

Purchased from www.WorkshopManuals.co.uk

www.WorkshopManuals.co.uk

# INJECTION NOZZLE

## REMOVAL AND INSTALLATION

**Pre-removal Operation**
- Battery and Battery Tray Removal
- Air Pipe Removal (Refer to GROUP 15.)

**Post-installation Operation**
- Air Pipe Installation (Refer to GROUP 15.)
- Battery and Battery Tray Installation
- Accelerator Cable Adjustment (Refer to GROUP 17 - On-vehicle Service.)

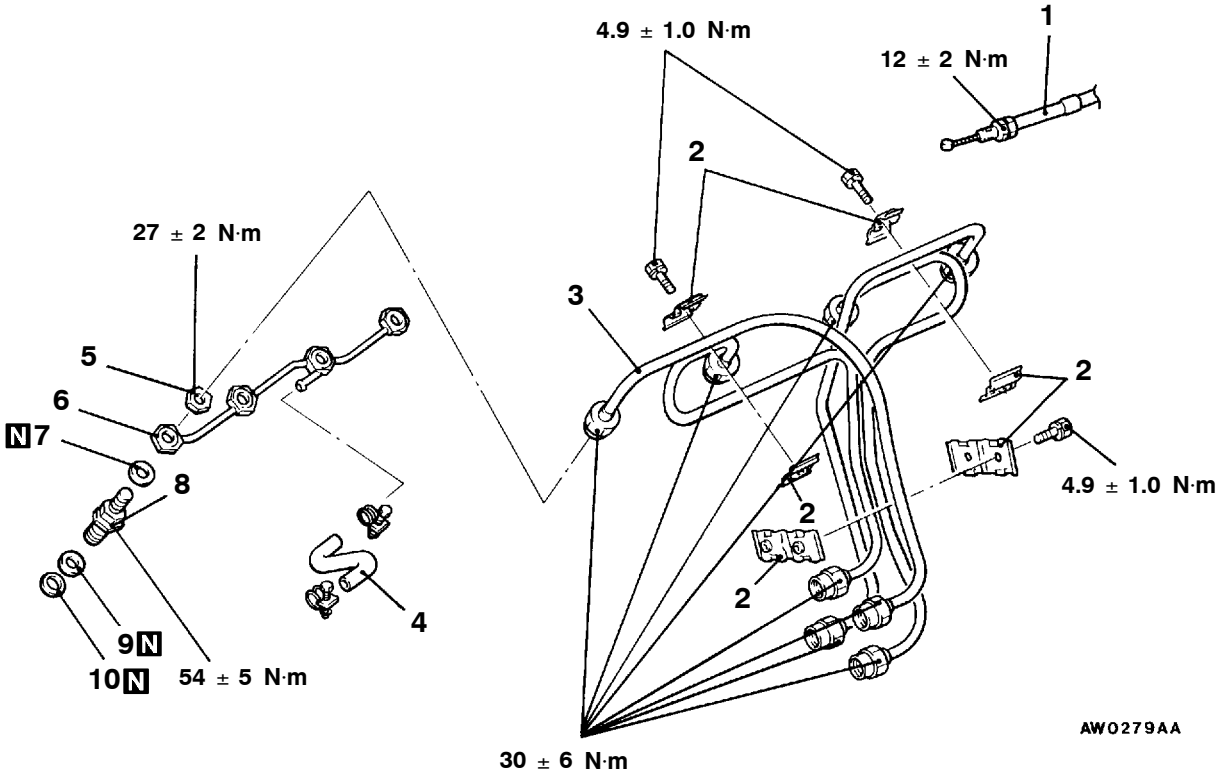


**Removal steps**

1. Accelerator cable connection
2. Injection pipe clamp
3. ◀A▶ Injection pipe
4. Fuel return hose
5. ◀B▶ Nut
6. ◀B▶ Fuel return pipe
7. Fuel return pipe gasket
8. ◀C▶ Injection nozzle assembly
9. ▶A◀ Holder gasket
10. ▶A◀ Nozzle gasket

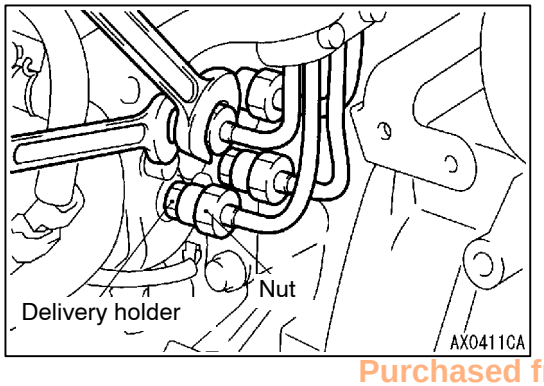


## REMOVAL SERVICE POINTS

### ◀A▶ INJECTION PIPE DISCONNECTION

When loosening nuts at both ends of injection pipe, hold the delivery holder (for pump side) and the injection nozzle assembly (for nozzle side) with wrench and loosen nut.

Purchased from www.WorkshopManuals.co.uk

www.WorkshopManuals.co.uk

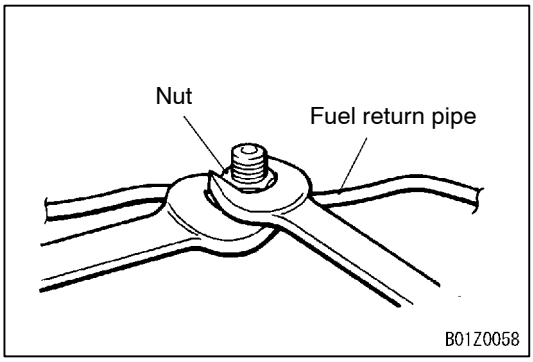


### ◀B▶ NUT/FUEL RETURN PIPE REMOVAL

1. While using a spanner or similar tool to hold the hexagonal nut of the fuel return pipe, remove the nut.

   **Caution**
   **If an attempt is made to loosen the nut without first holding the fuel return pipe, the pipe may be broken or otherwise damaged.**

2. Disconnect the fuel return pipe.

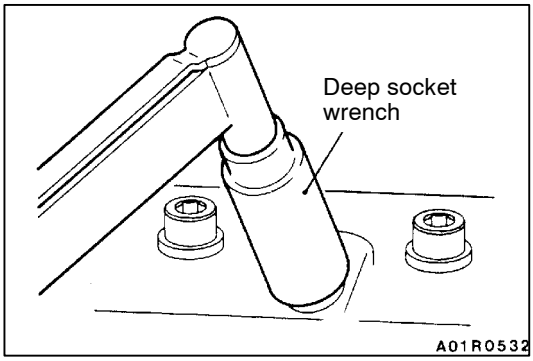


### ◀C▶ INJECTION NOZZLE ASSEMBLY REMOVAL

Using a deep socket wrench, remove the injection nozzle assembly.

**Caution**

1. **Make a mark on the removed injection nozzle assembly (the cylinder No.).**
2. **Use a cap to prevent foreign material, etc. from entering the injection nozzle hole.**

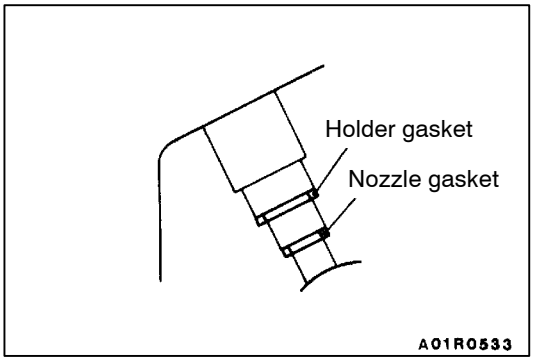


## INSTALLATION SERVICE POINT

### ▶A◀ NOZZLE GASKET/HOLDER GASKET INSTALLATION

Clean the cylinder head's injection nozzle hole, and insert a new gasket.

Purchased from www.WorkshopManuals.co.uk

www.WorkshopManuals.co.uk

## DISASSEMBLY AND REASSEMBLY

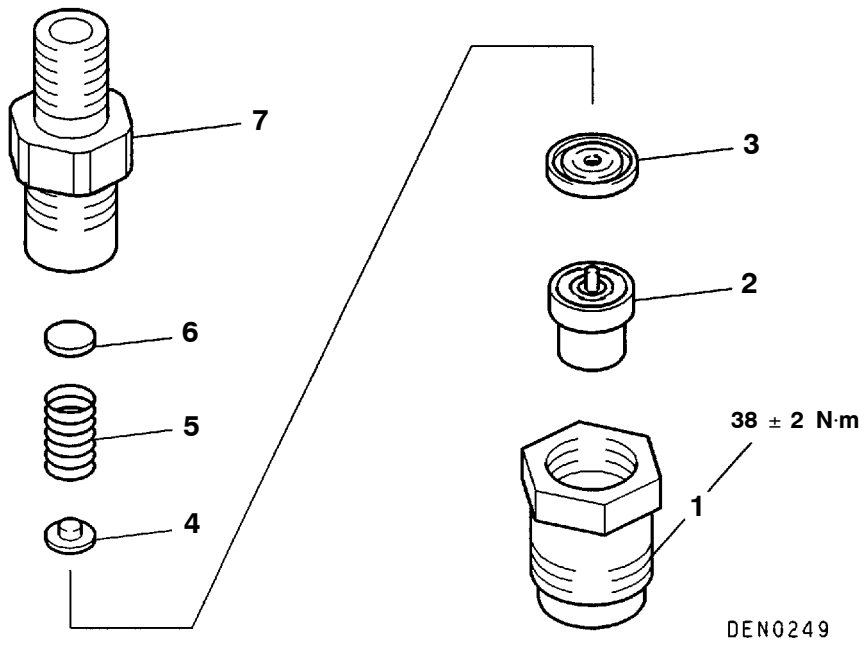


**Disassembly steps**

◀A▶ ▶A◀ 1. Retaining nut
2. Nozzle tip
3. Distance piece
4. Retaining pin
5. Pressure ring
6. Shim
7. Nozzle holder body

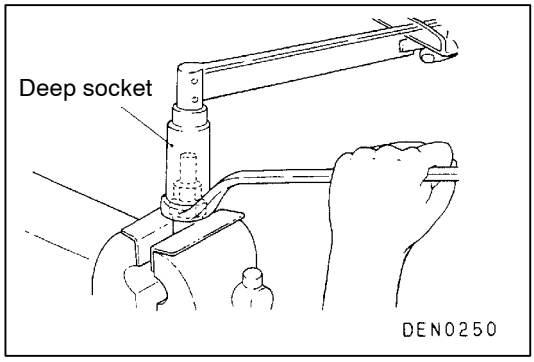


## DISASSEMBLY SERVICE POINT

### ◀A▶ RETAINING NUT REMOVAL

1. Lightly clamp the retaining nut in a vise with soft jaws.
2. Hold the retaining nut with a box wrench, and loosen the nozzle holder body using a deep socket.

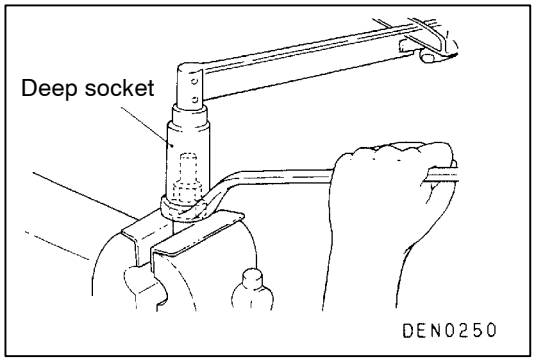


## REASSEMBLY SERVICE POINT

### ▶A◀ RETAINING NUT INSTALLATION

1. Finger-tighten the nozzle holder body.
2. Lightly clamp the retaining nut in a vise with soft jaws.
3. While holding the retaining nut with a box wrench, tighten the nozzle holder body to the specified torque with a deep socket.

Purchased from www.WorkshopManuals.co.uk

www.WorkshopManuals.co.uk

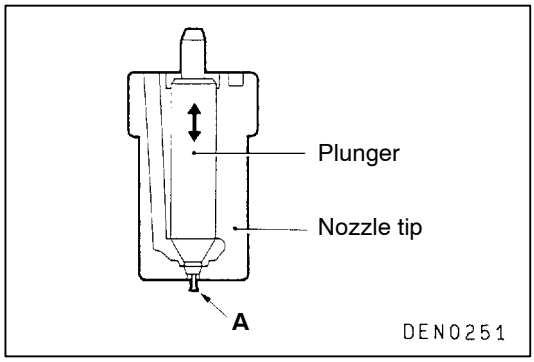


## INSPECTION

### NOZZLE TIP

1. Check the nozzle tip for carbon deposits. Scape off carbon deposits with a piece of wood and clean each part with petrol. After cleaning, keep parts submerged in diesel fuel. Take particular care to protect the nozzle tip needle valve from damage.
2. While the nozzle tip is submerged in diesel fuel, check that the needle valve slides smoothly.
   If the needle valve does not slide smoothly, replace the nozzle tip.
   When replacing the nozzle tip, completely wash off the anticorrosive oil from the new nozzle tip with clean diesel fuel before using it.
3. Check plunger tip “A” for deformation and breakage. If “A” is damaged or broken, replace it.

### DISTANCE PIECE

Check the surface in contact with the nozzle holder body by using minium.

### PRESSURE SPRING

Check spring for weakness and breakage.

Purchased from www.WorkshopManuals.co.uk

www.WorkshopManuals.co.uk

# INJECTION PUMP

## REMOVAL AND INSTALLATION

**Pre-removal Operation**
- Engine Coolant Draining
  (Refer to GROUP 14 - On-vehicle Service.)
- Battery and Battery Tray Removal
- Timing Belt Removal (Refer to GROUP 11B.)
- Air Pipe Removal (Refer to GROUP 15.)

**Post-installation Operation**
- Air Pipe Installation (Refer to GROUP 15.)
- Timing Belt Installation (Refer to GROUP 11B.)
- Battery and Battery Tray Installation
- Engine Coolant Supplying
  (Refer to GROUP 14 - On-vehicle Service.)
- Injection Timing Adjustment
  (Refer to GROUP 11B - On-vehicle Service.)
- Accelerator Cable Adjustment
  (Refer to GROUP 17 - On-vehicle Service.)

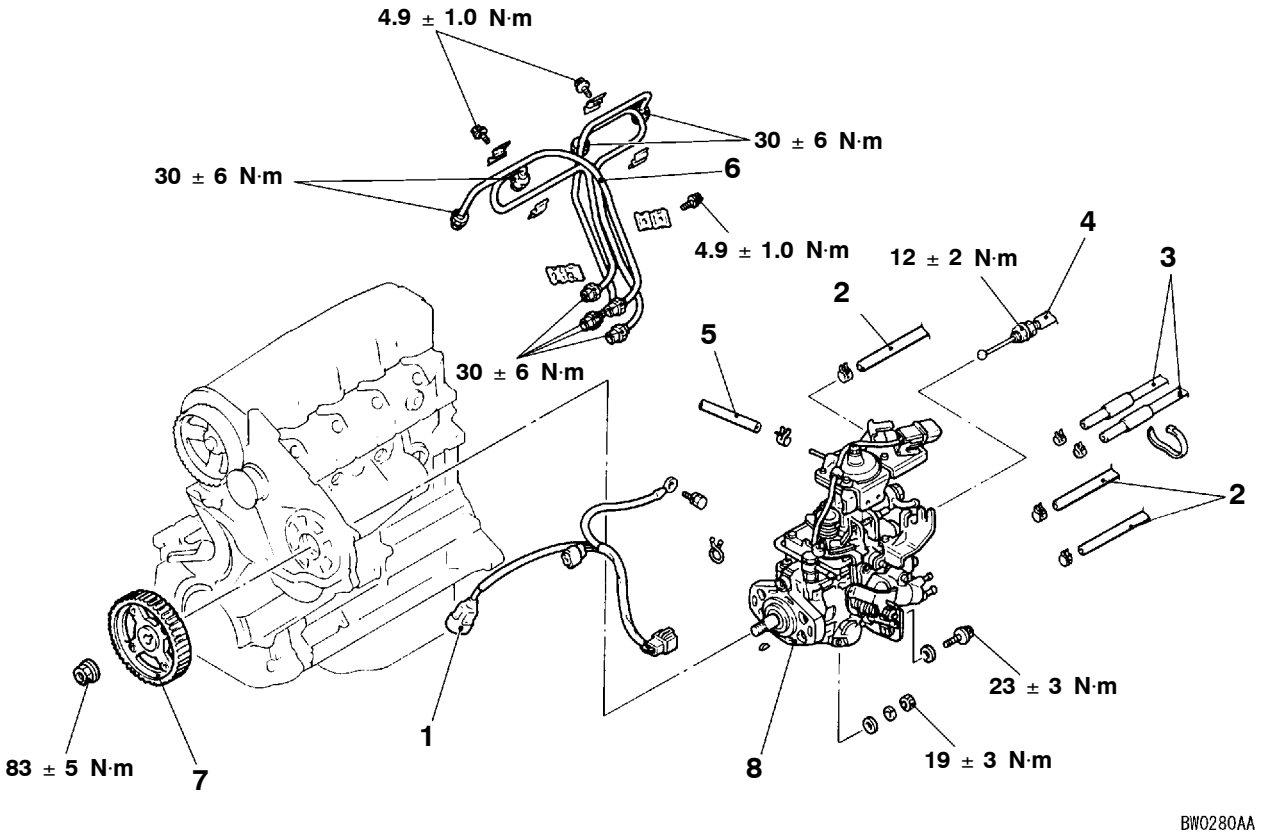


**Removal steps**

1. Fuel injection pump wiring harness
2. Water hoses connection
3. Fuel hoses connection
4. Accelerator cable connection

◀A▶
◀B▶

5. Boost hose connection
6. Fuel injection pipe
7. Fuel injection pump sprocket
8. Fuel injection pump

Purchased from www.WorkshopManuals.co.uk

www.WorkshopManuals.co.uk

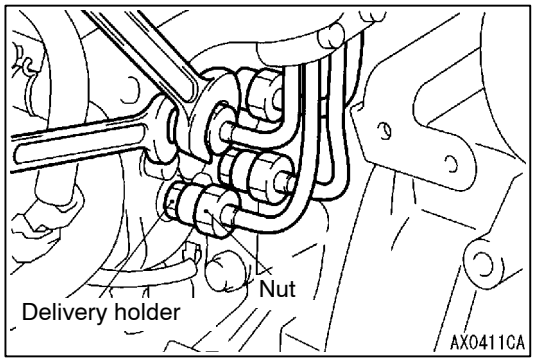


## REMOVAL SERVICE POINTS

### ◀A▶ INJECTION PIPE REMOVAL

Loosen the nuts at the end of the injection pipe with the delivery holder (for pump side) and injection nozzle assembly (for nozzle side) retained by a spanner, etc.

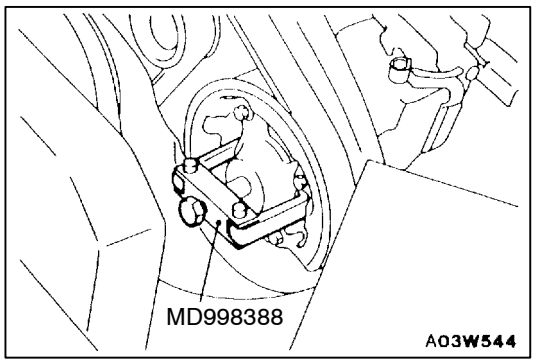


### ◀B▶ FUEL INJECTION PUMP SPROCKET REMOVAL

Remove sprocket installing nut and remove sprocket from pump drive shaft with special tool.

**Caution**

1. **Do not hit pump drive shaft with hammer, etc.**
2. **When holding injection pump, do not allow to dangle by holding accelerator lever or fast idle lever. Do not remove these levers. Removal will cause injection pump malfunction.**

Purchased from www.WorkshopManuals.co.uk

www.WorkshopManuals.co.uk

**NOTES**

Purchased from www.WorkshopManuals.co.uk

www.WorkshopManuals.co.uk

# DIESEL FUEL <4M4>

**Click on the applicable bookmark to selected the required model year.**

Purchased from www.WorkshopManuals.co.uk

www.WorkshopManuals.co.uk


# DIESEL FUEL <4M4>

## CONTENTS


**GENERAL INFORMATION . . . . . 2**

**SERVICE SPECIFICATIONS . . . . . 3**

**SEALANT . . . . . 3**

**SPECIAL TOOLS . . . . . 4**

**TROUBLESHOOTING . . . . . 5**

**ON-VEHICLE SERVICE . . . . . 42**

- Injection Timing Check and Adjustment . . . . . 42
- Idle Speed Check and Adjustment . . . . . 42
- Accelerator Pedal Position Sensor (APS) Adjustment . . . . . 42
- Control Relay Continuity Check . . . . . 43
- Accelerator Pedal Position Sensor (APS) Check . 43
- Idle Switch Check . . . . . 43
- Boost Air Temperature Sensor (Intake Air Temperature Sensor) Check . . . . . 44
- Engine Coolant Temperature Sensor Check . . . . . 44
- Evacuation of Water from Fuel Filter . . . . . 45
- Fuel Filter Cartridge Replacement . . . . . 45
- Evacuation of Air from Fuel Line . . . . . 45
- Fuel Injection Pump Check . . . . . 46
- Intake Air Restriction Equipment Check . . . . . 48
- Injection Nozzle Check and Adjustment . . . . . 49

**INJECTION NOZZLE . . . . . 50**

**INJECTION PUMP . . . . . 56**

**ENGINE-ECU . . . . . 59**


Purchased from www.WorkshopManuals.co.uk

www.WorkshopManuals.co.uk

# GENERAL INFORMATION

The electronically-controlled fuel injection system consists of sensors which detect the condition of the diesel engine, an engine-ECU which controls the system based on signals from these sensors, and actuators which operate according to control commands from the engine-ECU.
The engine-ECU carries out operations such as fuel injection rate control, fuel injection timing control and idle up control. In addition, the engine-ECU is equipped with several self-diagnosis functions which make troubleshooting easier in the event that a problem develops.

## FUEL INJECTION RATE CONTROL

The fuel injection completion timing is controlled by means of a solenoid-type spill valve to ensure that the optimum amount of fuel is supplied to the engine in accordance with gradual changes in the engine running condition.
Before fuel injection starts, the solenoid-type spill valve is on (energized), so that the valve is closed. As the plunger turns and rises, fuel is sent out under pressure, and when the fuel flow rate reaches the target value for fuel injection, the solenoid-type spill valve turns off. When the solenoid-type spill valve turns off, the fuel under high pressure inside the plunger is leaked out into the pump chamber and fuel injection is completed.

## FUEL INJECTION TIMING CONTROL

The position of the injection pump timer piston is controlled so that fuel injection is carried out at the optimum timing in accordance with the engine running condition.
The timer piston position is determined by duty control of the timing control solenoid valve which is located in the line between the high-pressure chamber and the low-pressure chamber of the timer piston.
The fuel injection timing is advanced by increasing the control duty of the timing control solenoid valve.

## IDLE SPEED CONTROL

Controlling the fuel injection rate in accordance with the engine running condition maintains the idle speed at the optimum condition.

## SELF-DIAGNOSIS FUNCTION

- When an abnormality is detected in any of the sensors or actuators, the engine warning lamp illuminates to warn the driver.
- When an abnormality is detected in any of the sensors or actuators, a diagnosis code number corresponding to the problem which occurred is output.
- The RAM data relating to the sensors and actuators which is stored in the engine-ECU can be read using the MUT-II. In addition, the actuators can be force-driven under certain conditions.

## OTHER CONTROL FUNCTIONS

1. Power Supply Control
   When the ignition switch is turned to ON, the relay turns on and power is supplied to components such as the timing control solenoid valve.
2. Intake Air Throttle Control
   When the engine is idling after having warmed up, the throttle valve is half opened to restrict the amount of intake air in order to reduce vibration and noise.
3. A/C Relay Control
   Turns the compressor clutch of the A/C ON and OFF
4. Fan motor relay control
   The radiator fan and condenser fan operating speeds are controlled in accordance with the engine coolant temperature and the vehicle speed.
5. Glow Control
   Refer to GROUP 16.
6. EGR Control
   Refer to GROUP 17.

Purchased from www.WorkshopManuals.co.uk

www.WorkshopManuals.co.uk

# SERVICE SPECIFICATIONS

| Item | | Standard value |
|---|---|---|
| Accelerator pedal position sensor reference voltage V | | 0.985 - 1.085 |
| Accelerator pedal position sensor resistance kΩ | | 3.5 - 6.5 |
| Boost air temperature sensor (Intake air temperature sensor) resistance kΩ | When the temperature is 20°C | 2.3 - 2.9 |
| | When the temperature is 80°C | 0.30 - 0.39 |
| Engine coolant temperature sensor resistance kΩ | When the temperature is 20°C | 2.3 - 2.6 |
| | When the temperature is 80°C | 0.30 - 0.34 |
| Fuel cut solenoid valve resistance Ω | | 6.8 - 9.2 |
| Timing control valve resistance Ω | | 10.8 - 11.2 |
| Timer piston position sensor resistance Ω | Connector terminals No.1 - No.2 | 160 - 168 |
| | Connector terminals No.1 - No.3 | 80 - 84 |
| | Connector terminals No.2 - No.3 | 80 - 84 |
| Control sleeve position sensor resistance Ω | Connector terminals No.4 - No.12 | 11.2 - 12.4 |
| | Connector terminals No.4 - No.8 | 5.6 - 6.2 |
| | Connector terminals No.8 - No.12 | 5.6 - 6.2 |
| GE actuator (electronic governor) resistance Ω | Connector terminals No.6 - No.10 | 0.64 - 0.72 |
| Fuel temperature sensor resistance kΩ | Connector terminals No.7 - No.11 | 1.4 - 2.6 |
| Engine speed sensor resistance kΩ | | 2.15 |
| Main/sub throttle solenoid valve resistance Ω | | 36 - 44 |

# SEALANT

| Item | Specified sealant |
|---|---|
| Engine coolant temperature sensor | 3M Nut Locking Part No.4171 or equivalent |

Purchased from www.WorkshopManuals.co.uk

www.WorkshopManuals.co.uk

# SPECIAL TOOLS

| Tools | Number | Name | Application |
|---|---|---|---|
| 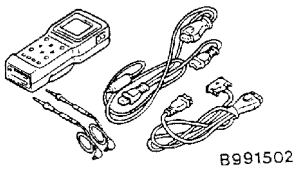  | MB991502 | MUT-II sub assembly | Electronically controlled fuel injection system check |
| 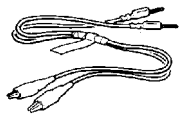 | MB991529 | Diagnosis code check harness | Diagnosis code reading |
| 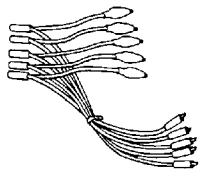 | MB991348, MB991658 | Test harness set | • Boost pressure sensor check <MB991348><br>• APS adjustment <MB991658> |
| 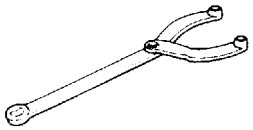 | MB990767 | End yoke holder | Holding the crankshaft pulley |
| 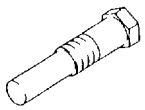 | MB998754 | Crankshaft pulley holder pin | |
| 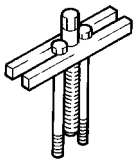  | MH062567 | Gear puller | Injection pump gear assembly removal |
| 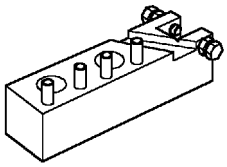 | 157992-2820 (zexcel) | Plate | Retaining nut removal and installation |
| 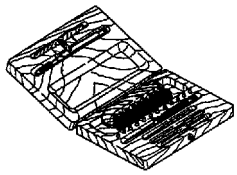 | 105789-0010 (zexcel) | Nozzle cleaning tool | Cleaning of nozzle and needle valve |

Purchased from www.WorkshopManuals.co.uk

www.WorkshopManuals.co.uk

# TROUBLESHOOTING

## STANDARD FLOW OF DIAGNOSTIC TROUBLESHOOTING

Refer to GROUP 00 - How to Use Troubleshooting/Inspection Service Points.

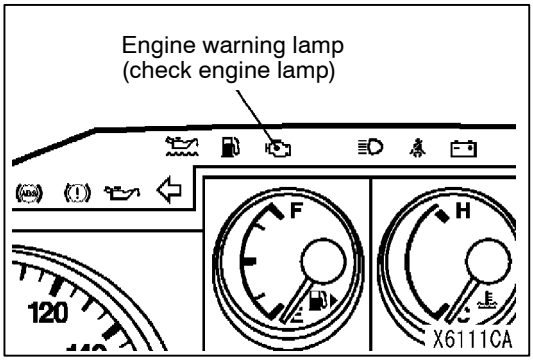


## DIAGNOSIS FUNCTION

### ENGINE WARNING LAMP (CHECK ENGINE LAMP)

Engine warning lamp is lit when any abnormality takes place in the item related to electronically controlled fuel injection system shown in the following table.
If the malfunction indicator lamp has been on and/or is lit when the engine is in operation, check the diagnosis output.

**Engine warning lamp check items**

| |
|---|
| Accelerator pedal position sensor (main) |
| Accelerator pedal position sensor (sub) |
| Boost pressure sensor (Boost sensor) |
| Engine speed sensor |
| Control sleeve position sensor |
| Timer piston position sensor |
| Main throttle solenoid valve |
| GE actuator |
| Idle switch (built-in) |
| Engine-ECU |

### METHOD OF ERASING AND ERASING DIAGNOSIS CODES

Refer to GROUP 00 - How to Use Troubleshooting/Inspection Service Points.

### INSPECTION USING MUT-II DATA LIST AND ACTUATOR TESTING

1. Carry out inspection by means of the data list and the actuator test function.
   If there is an abnormality, check and repair the chassis harnesses and components.
2. After repairing, re-check using MUT-II and check that the abnormal input and output have returned to normal as a result of the repairs.
3. Erase the diagnosis code memory.
4. Remove the MUT-II.
5. Start the engine again and carry out a road test to confirm that the problem has disappeared.

Purchased from www.WorkshopManuals.co.uk

www.WorkshopManuals.co.uk

## FAIL-SAFE, BACKUP FUNCTIONS

When abnormalities in the major sensors are detected by diagnosis functions, pre-set control logic operates to maintain a safe driving condition for the vehicle.

| Diagnosis item | Control features in malfunction |
|---|---|
| Accelerator pedal position sensor | ● Accelerator pedal released (idle switch ON)<br>Acceleration opening degree = 0%<br>● Accelerator pedal applied (idle switch OFF)<br>Engine controlled at low speed<br>Acceleration opening degree = 20% fixed |
| Idle switch | ● Void idling speed control.<br>● Void cruise control. |
| Engine speed sensor | ● Engine controlled at low speed<br>● Void cruise control. |
| Boost air temperature sensor | Maintain the intake air temperature at 50 °C. |
| Vehicle speed sensor | ● Void idling speed control.<br>● Void cruise control. |
| Engine coolant temperature sensor | Maintain the engine coolant temperature at 80 °C. |
| Control sleeve position sensor | ● Engine controlled at low speed<br>● Void cruise control. |
| Timer piston position sensor | ● Injection timing stabilizing control<br>● Void cruise control. |
| Barometric pressure sensor (ECU built-in) | Keep the barometric pressure at 101 kPa. |
| Fuel temperature sensor | Maintain the fuel temperature at 50 °C. |
| Boost pressure sensor | Keep the boost pressure as barometric pressure (101 kPa). |
| Injection correction ROM | Void correction. |
| GE actuator | ● Engine controlled at low speed<br>● Void cruise control. |
| Over boost | Void cruise control. |
| Timing control valve | ● Injection timing stabilizing control<br>● Void cruise control. |

Purchased from www.WorkshopManuals.co.uk

www.WorkshopManuals.co.uk

## INSPECTION CHART FOR DIAGNOSIS CODES

| Code No. | Diagnosis item | Reference page |
|---|---|---|
| 11 | Accelerator pedal position sensor (main) system | 13C-8 |
| 12* | Boost pressure sensor system | 13C-9 |
| 13 | Barometric pressure sensor (ECU built-in) system | 13C-10 |
| 14 | Fuel temperature sensor system | 13C-10 |
| 15 | Engine coolant temperature sensor system | 13C-11 |
| 16 | Boost air temperature sensor system | 13C-11 |
| 17 | Vehicle speed sensor system | 13C-12 |
| 18 | Engine speed sensor (backup) system | 13C-13 |
| 21 | Engine speed sensor system | 13C-14 |
| 23 | Idle switch (accelerator pedal position sensor built-in) system | 13C-15 |
| 25* | Timer piston position sensor system | 13C-16 |
| 26* | Control sleeve position sensor system | 13C-17 |
| 27 | Accelerator pedal position sensor (sub) system | 13C-18 |
| 41* | Main throttle solenoid valve system | 13C-19 |
| 43 | Timing control valve system | 13C-20 |
| 46 | Injection correction ROM system | 13C-21 |
| 48* | GE actuator (in the middle of control sleeve position sensor inoperative) system | 13C-21 |
| 49* | Over boost (turbocharger waste gate malfunction) | 13C-22 |
| 54 | Immobilizer system | 13C-22 |

**Caution**
**If the the above-mentioned diagnosis code number with the asterisks can be displayed along with another code number in parentheses simultaneously, check the other code number before replacing the engine-ECU.**
**12 (41, 49), 26 (48), 25 (43), 41 (12, 49), 48 (26), 49 (12, 41)**

Purchased from www.WorkshopManuals.co.uk

www.WorkshopManuals.co.uk

## INSPECTION PROCEDURE FOR DIAGNOSIS CODE

| Code No. 11 Accelerator pedal position sensor system | Probable cause |
|---|---|
| Range of Check<br>● Ignition switch: ON, accelerator pedal position sensor (sub) operative, except for during engine cranking<br>Set Conditions<br>● Output voltage of accelerator pedal position sensor (sub) for one second is 0.2 V or higher and lower than 2.5V. Output voltage of accelerator pedal position sensor (main) for one second is 4.5V or higher, or lower than 0.2V.<br>Range of Check<br>● Ignition switch:ON, except for during engine cranking<br>Set Conditions<br>● The output voltage of accelerator pedal position sensor (main and sub) for 0.2 second is 0.2V or higher, or lower than 4.5V and the difference in sensor output voltage between the main and sub is 1V or higher, or idle switch:ON, and sensor main output voltage is 1.875V or higher. | ● Accelerator pedal position sensor inoperative<br>● Accelerator pedal position sensor open circuit, short circuit, or connector contact inoperative<br>● Engine-ECU inoperative |

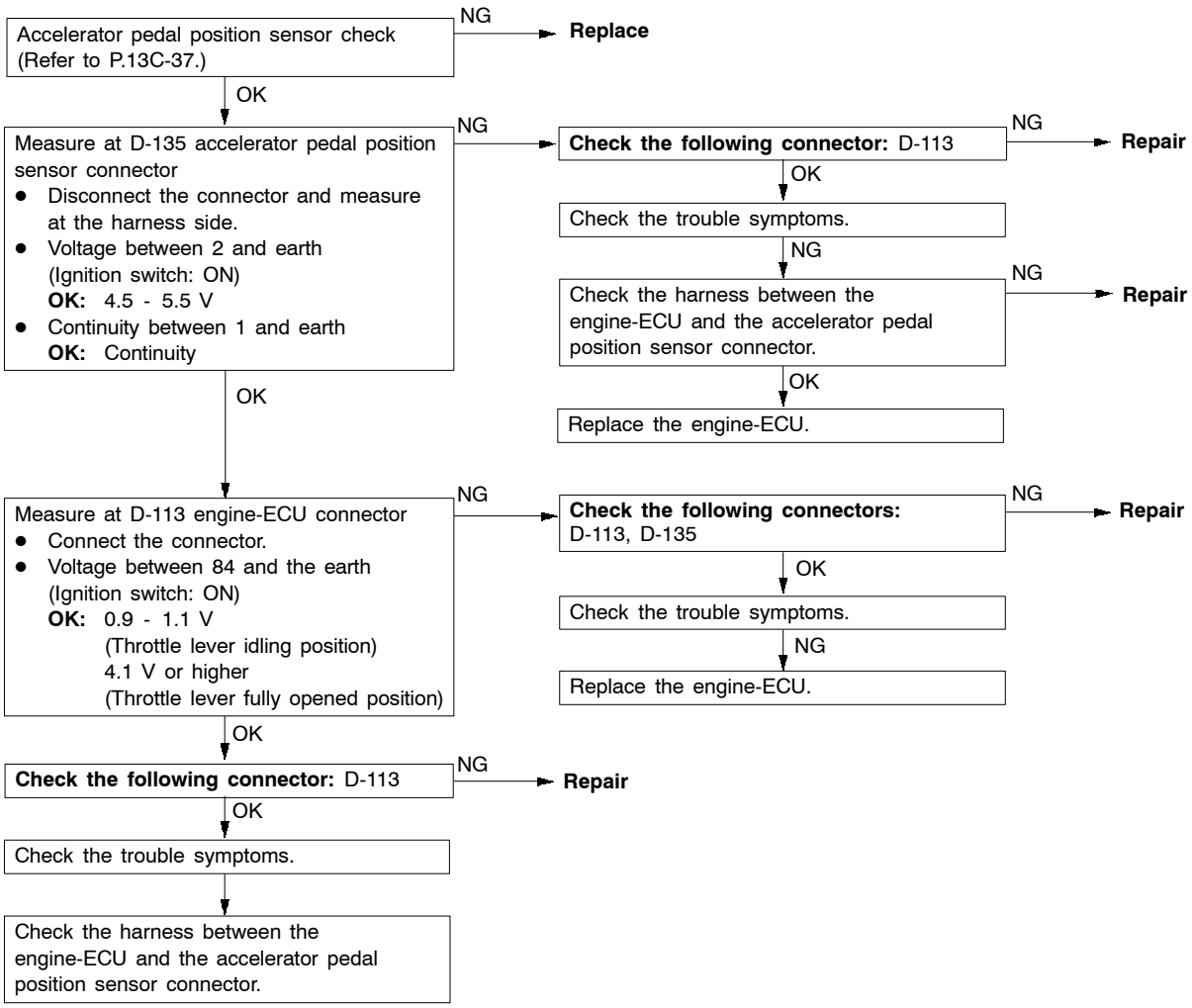


Purchased from www.WorkshopManuals.co.uk

www.WorkshopManuals.co.uk

| Code No. 12 Boost pressure sensor (boost sensor) system | Probable cause |
|---|---|
| Range of Check<br>● Ignition switch: ON, except for during engine cranking<br>Set Conditions<br>● Sensor output voltage for one second is 4.5 Vor higher (boost pressure is approximately 306.7kPa).<br>or<br>● Sensor output voltage for one second is 0.2 Vor lower (boost pressure is approximately 20kPa or lower)<br>Range of Check<br>● Engine speed is 1600 r/min or higher and the acceleration opening degree is 60% or more.<br>Set Conditions<br>● Boost pressure is lower than the barometric pressure + 13 kPa for two seconds. | ● Boost pressure sensor inoperative<br>● Boost pressure sensor open circuit, short circuit, or connector contact inoperative<br>● Boost pressure sensor hose disconnected<br>● Engine-ECU inoperative |

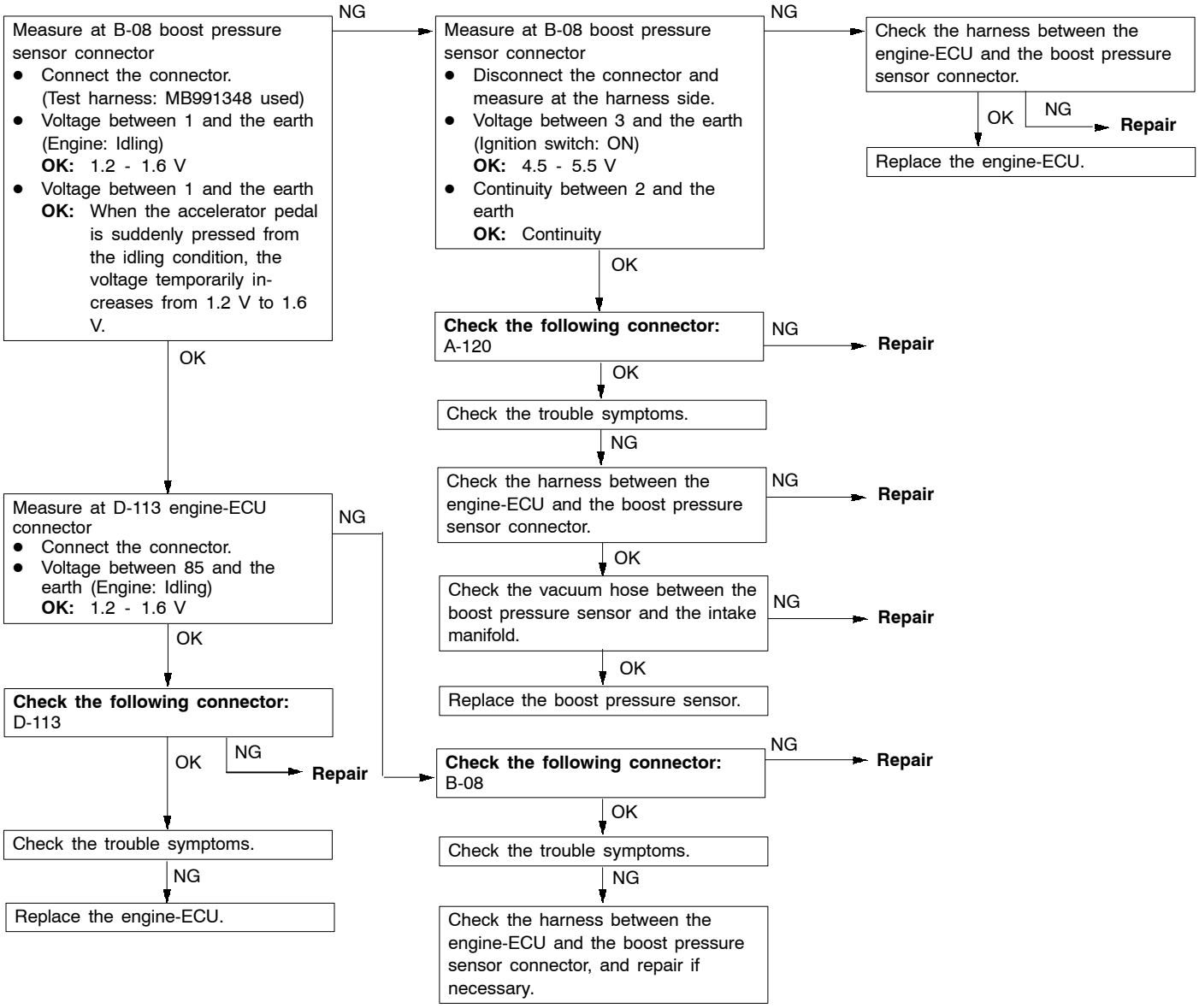


Purchased from www.WorkshopManuals.co.uk

www.WorkshopManuals.co.uk

| Code No. 13 Barometric pressure sensor system | Probable cause |
|---|---|
| Range of Check<br>● Ignition switch: ON, except for during engine cranking<br>Set Conditions<br>● The sensor output voltage is for 3 seconds is 4.5V or higher (the barometric pressure is approximately 120 kPa or over).<br>or<br>● The sensor output voltage is for 3 seconds is 1.5V or lower (the barometric pressure is approximately 33 kPa or under). | Engine-ECU inoperative |

Check the trouble symptoms. → NG → Replace the engine-ECU.

| Code No. 14 Fuel temperature sensor system | Probable cause |
|---|---|
| Range of Check<br>● Ignition switch: ON, except for during engine cranking<br>Set Conditions<br>● The sensor output voltage for 3 seconds is 0.2V or higher (the fuel temperature is approximately 120°C or higher).<br>or<br>● The sensor output voltage for 3 seconds is 4.6V or lower (the fuel temperature is approximately 50°C or lower). | ● Fuel temperature sensor inoperative<br>● Fuel temperature sensor open circuit, short circuit, or connector contact inoperative<br>● Engine-ECU inoperative |

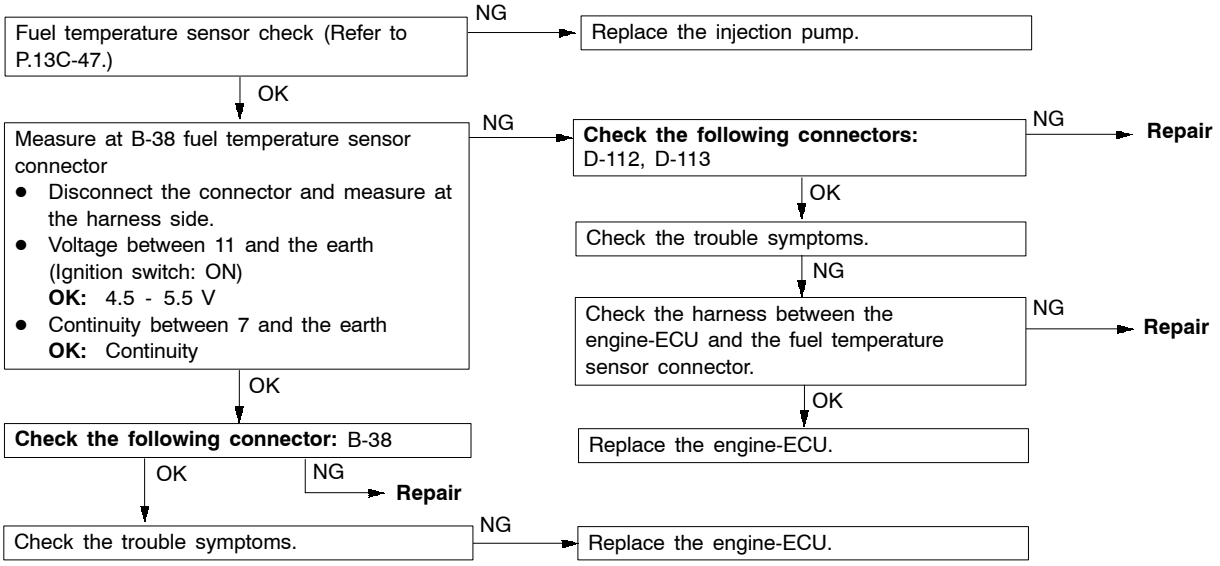


Purchased from www.WorkshopManuals.co.uk

www.WorkshopManuals.co.uk

| Code No. 15 Engine coolant temperature sensor system | Probable cause |
|---|---|
| Range of Check<br>● Ignition switch: ON, except for during engine cranking<br>Set Conditions<br>● The sensor output voltage for 3 seconds is 4.9V or higher (the coolant temperature is approximately -45 °C or lower).<br>or<br>● The sensor output voltage for 3 seconds is 0.2V or lower (the coolant temperature is approximately 140 °C or higher). | ● Engine coolant temperature sensor inoperative<br>● Engine coolant temperature sensor open circuit, short circuit, or connector contact inoperative<br>● Engine-ECU inoperative |

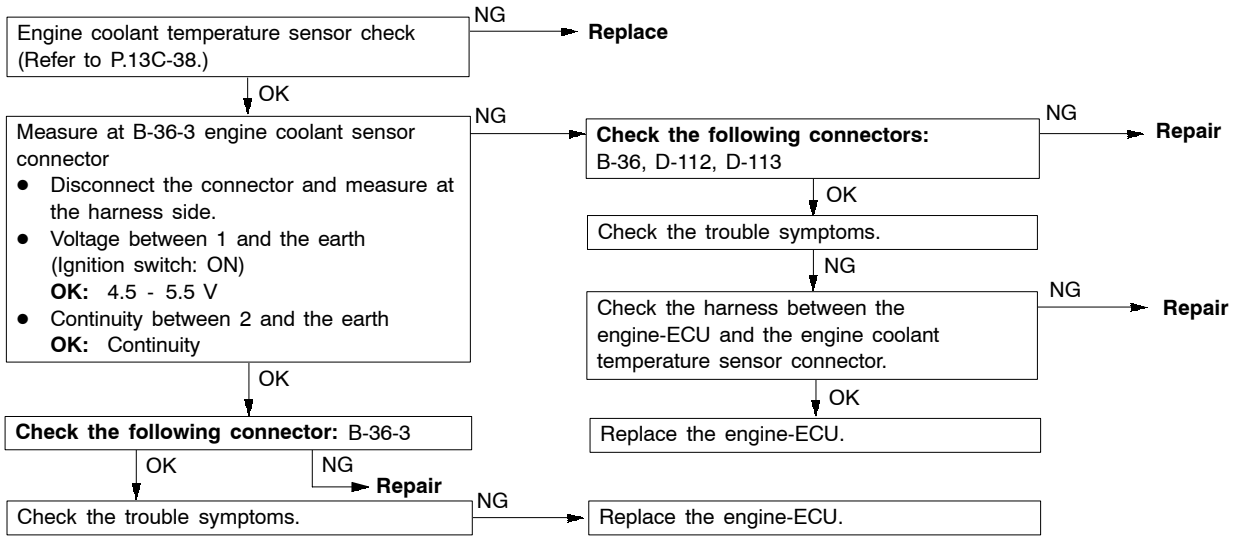


| Code No. 16 Boost air temperature sensor (intake air sensor) system | Probable cause |
|---|---|
| Range of Check<br>● Ignition switch:ON, except for during engine cranking<br>Set Conditions<br>● The sensor output voltage for 3 seconds is 4.6V or higher (the coolant temperature is approximately 45 °C or lower).<br>or<br>● The sensor output voltage for 3 seconds is 0.3V or lower (the coolant temperature is approximately 110 °C or higher). | ● Boost air temperature sensor inoperative<br>● Boost air temperature sensor open circuit, short circuit, or connector contact inoperative<br>● Engine-ECU inoperative |

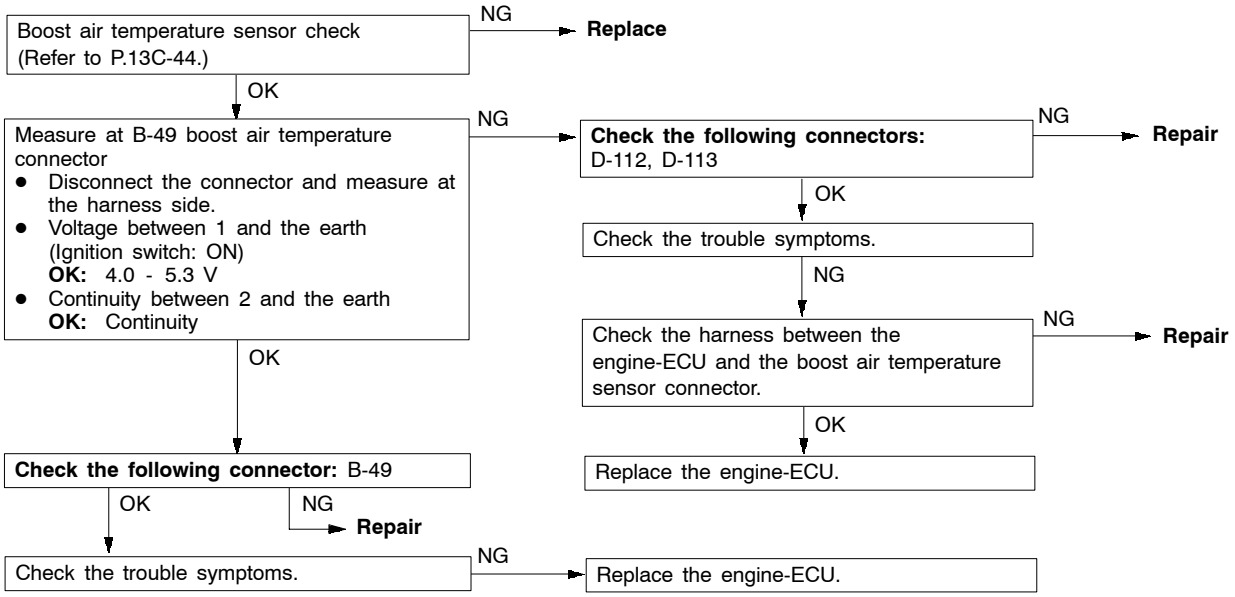


Purchased from www.WorkshopManuals.co.uk

www.WorkshopManuals.co.uk

| Code No. 17 Vehicle speed sensor system | Probable cause |
|---|---|
| Range of Check<br>● Ignition switch: ON<br>● Engine speed: 2800 r/min or higher<br>● Driving with heavy load<br>Set Conditions<br>● Slower than vehicle speed of 3 km/h | ● Vehicle speed sensor inoperative<br>● Vehicle speed sensor open circuit, short circuit, or connector contact inoperative<br>● Engine-ECU inoperative |

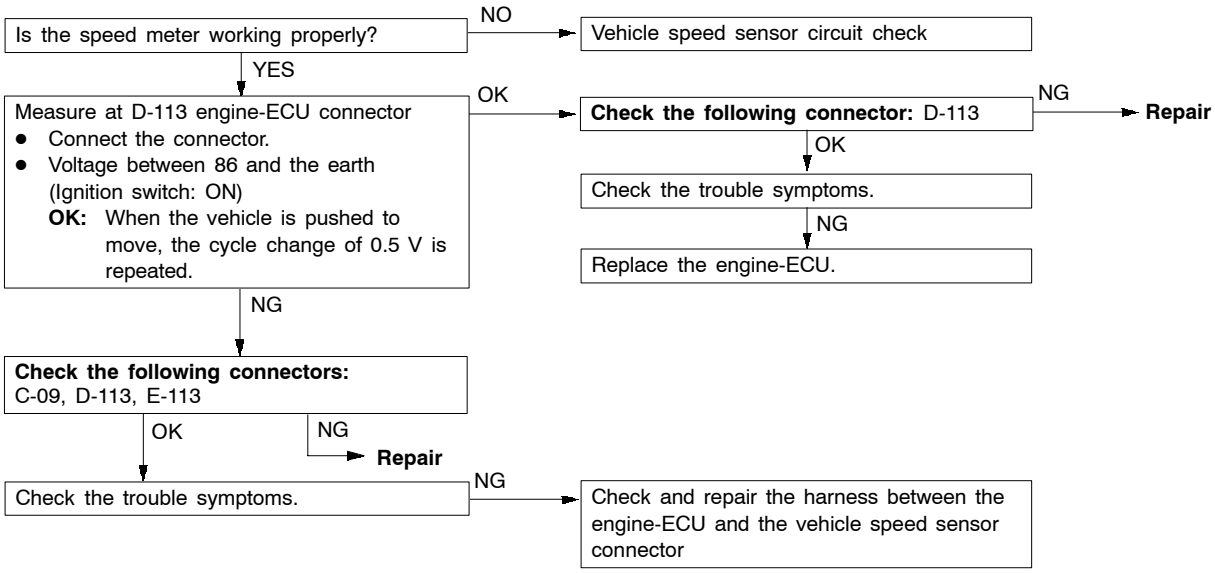


Purchased from www.WorkshopManuals.co.uk

www.WorkshopManuals.co.uk

| Code No. 18 Engine speed sensor (backup) system | Probable cause |
|---|---|
| Range of Check<br>● Except for during engine running and cranking<br>Set Conditions<br>● The difference in the engine speed sensor output for 4 seconds: 325 r/min or more | ● Engine speed sensor inoperative<br>● Engine speed sensor open circuit, short circuit, or connector contact inoperative<br>● Engine-ECU inoperative |

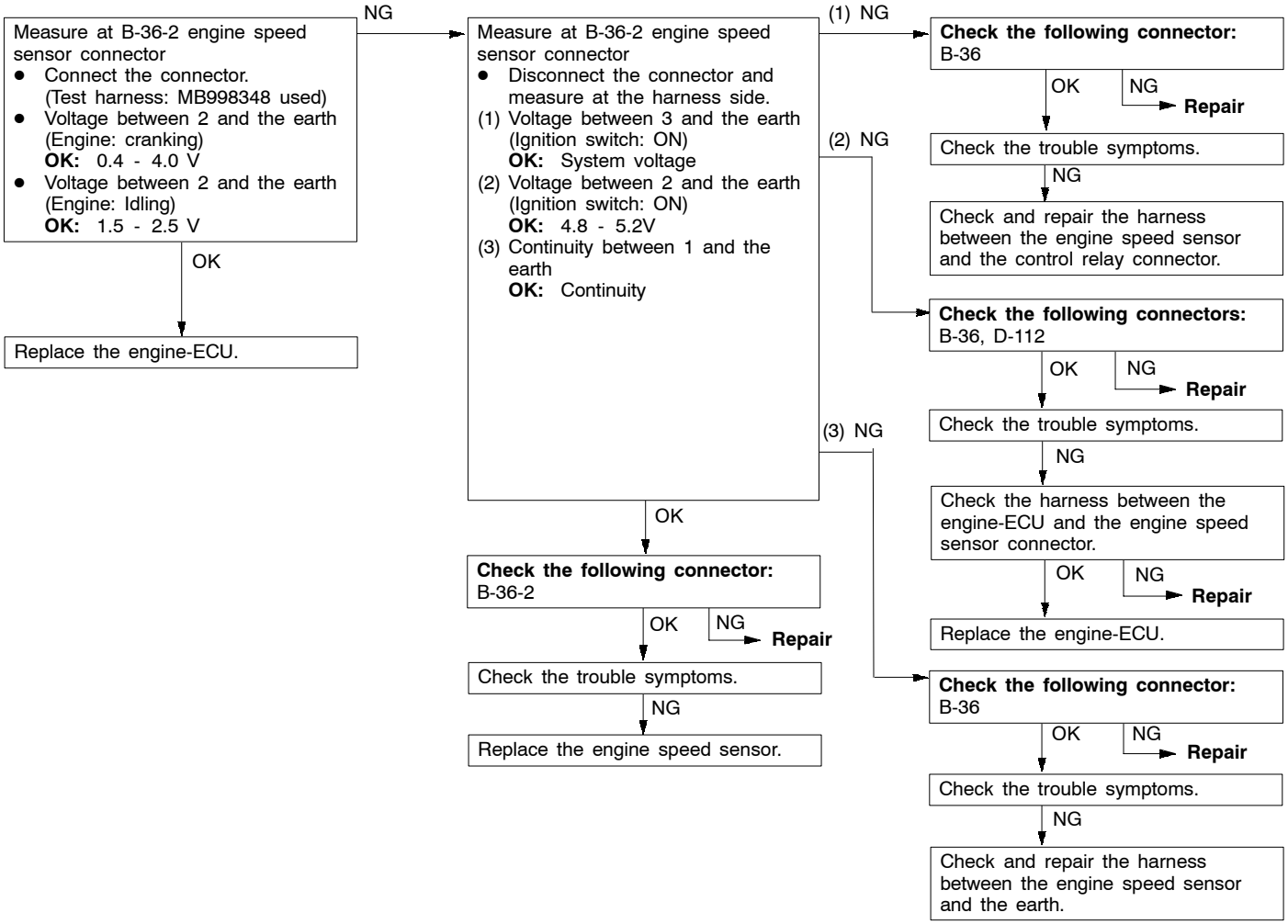


Purchased from www.WorkshopManuals.co.uk

www.WorkshopManuals.co.uk

| Code No. 21 Engine speed sensor system | Probable cause |
|---|---|
| Range of Check<br>● During engine cranking<br>Or<br>● Except for during engine running and cranking<br>Set Conditions<br>● No change in the sensor output voltage for 3 seconds (no pulse signal has been input).<br>Or<br>● No change in the engine speed sensor output for 0.06 seconds (for backup), or in the sensor output for 0.3 seconds | ● Engine speed sensor inoperative<br>● Engine speed sensor open circuit, short circuit, or connector contact inoperative<br>● Engine-ECU inoperative |

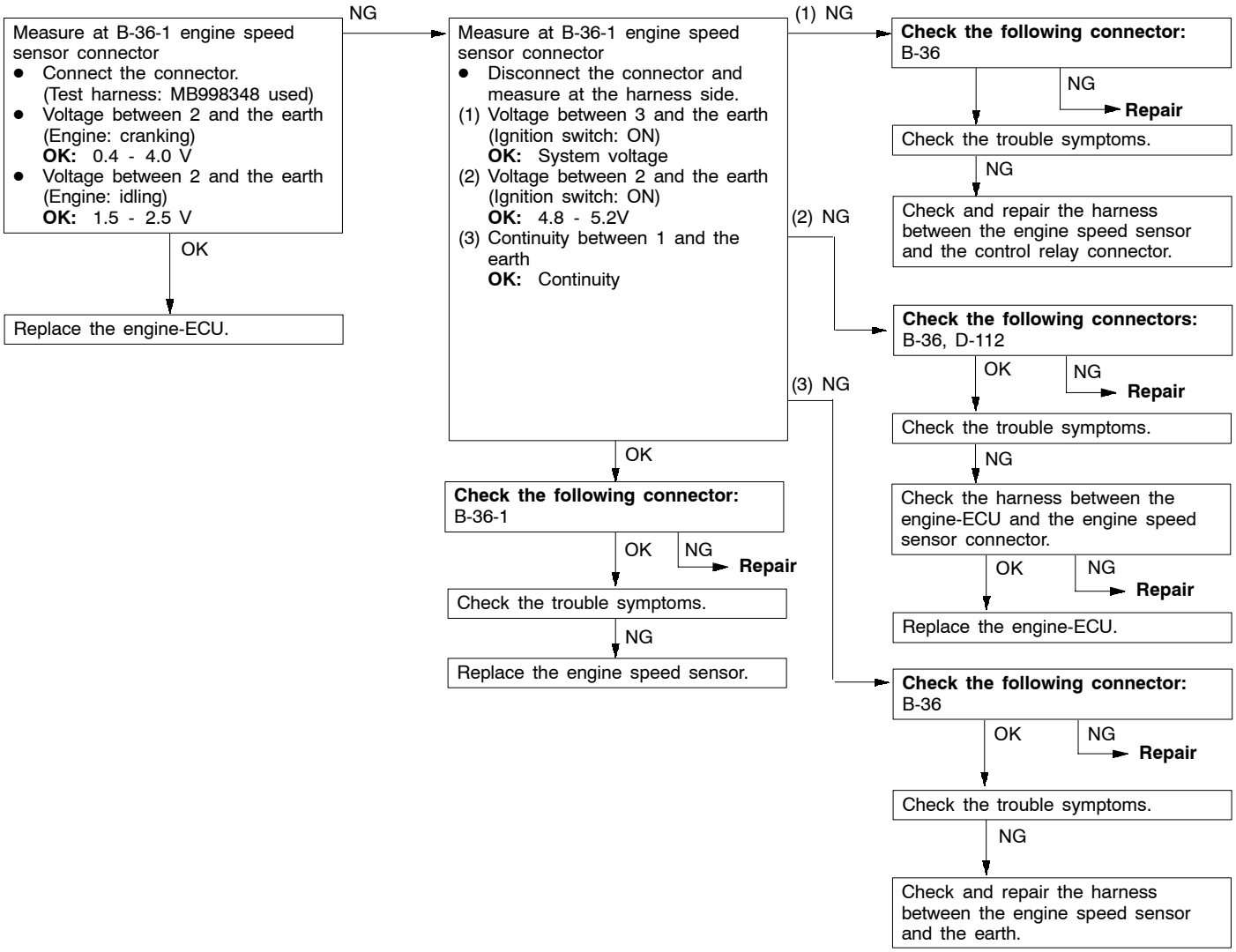


Purchased from www.WorkshopManuals.co.uk

www.WorkshopManuals.co.uk

| Code No. 23 Idle switch (accelerator pedal position sensor built-in) system | Probable cause |
|---|---|
| Range of Check<br>Ignition switch: ON, accelerator pedal position sensor (main, sub) operative, except for during engine cranking<br>Set Conditions<br>● For 1 minute idle switch (built-in): ON, accelerator pedal position sensor (main, sub) output voltage 1.875V or higher or 10 minutes<br>● Idle switch (built-in): OFF, accelerator pedal position sensor (main, sub) opening degrees less than 1% | ● Accelerator pedal position sensor inoperative<br>● Accelerator pedal position sensor open circuit, short circuit, or connector contact inoperative<br>● Idle switch "ON" inoperative<br>● Idle switch signal line short circuit<br>● Engine-ECU inoperative |

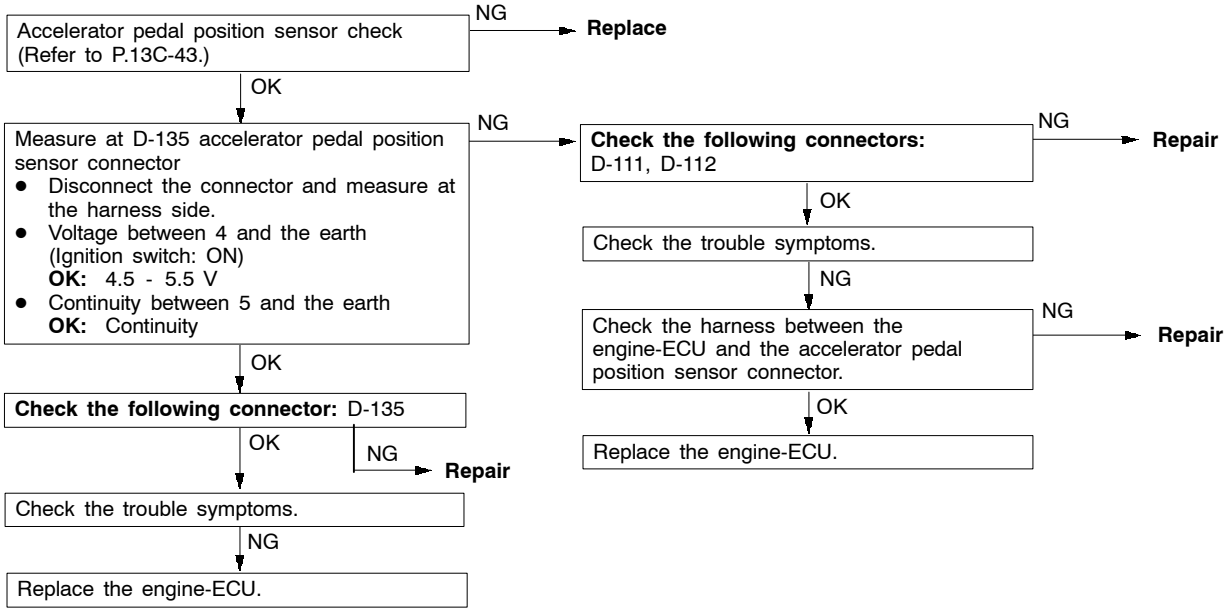


Purchased from www.WorkshopManuals.co.uk

www.WorkshopManuals.co.uk

| Code No. 25 Timer piston position sensor system | Probable cause |
|---|---|
| Range of Check<br>● Ignition switch: OK<br>● Not during the engine cranking<br>Set Conditions<br>● The sensor output voltage for 1 second is 4.9V*1 or more<br>or<br>● The sensor output voltage for 1 second is 0.25V*1 or less | ● Timer piston position sensor inoperative<br>● Timer piston position sensor open circuit, short circuit, or connector contact inoperative<br>● Engine-ECU inoperative |

NOTE:
*1: This voltage is derived from the input pulse signal converted in the engine-ECU and cannot be measured.
*2: This voltage is shown as a square wave with a cycle of 66 mircosec (High: 2.5V, Low: 1.25V).

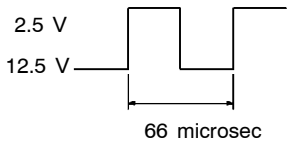


X6129CA

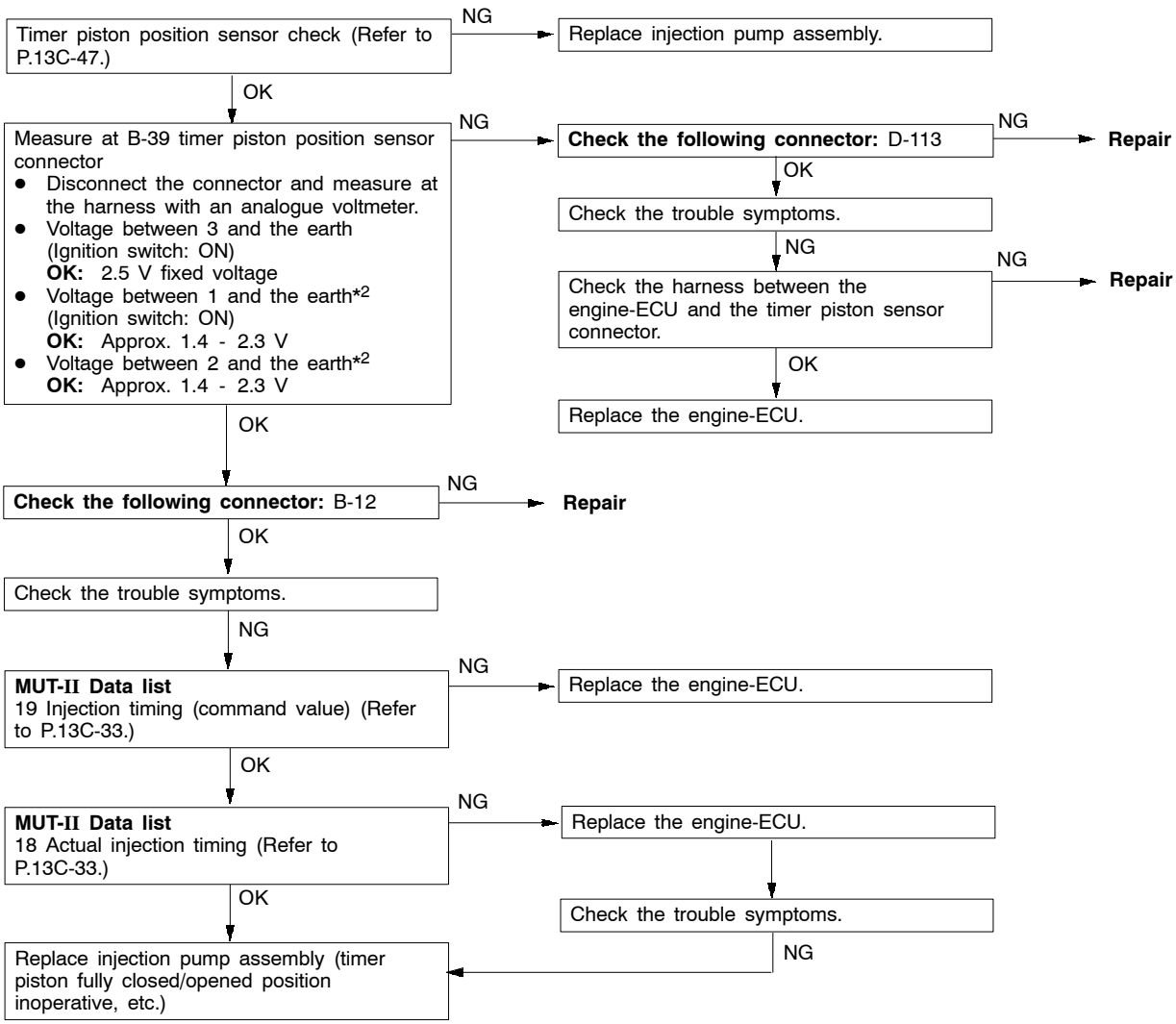


Purchased from www.WorkshopManuals.co.uk

www.WorkshopManuals.co.uk

| Code No. 26 Control sleeve position sensor system | Probable cause |
|---|---|
| Range of Check<br>● Ignition switch: ON<br>Set Conditions<br>● The sensor output voltage for 1 second is 4.7V*1 or more<br>or<br>● The sensor output voltage for 1 second is 0.25V*1 or less | ● Control sleeve position sensor inoperative<br>● Control sleeve position sensor open circuit, short circuit, or connector contact inoperative<br>● Engine-ECU inoperative |

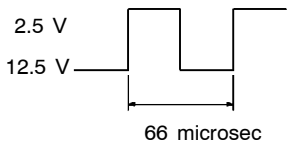


X6129CA

NOTE:
*1: This voltage is derived from the input pulse signal converted in the engine-ECU and cannot be measured.
*2: This voltage is shown as a square wave with a cycle of 16.7 microsec (High: 2.5V, Low: 1.25V.)

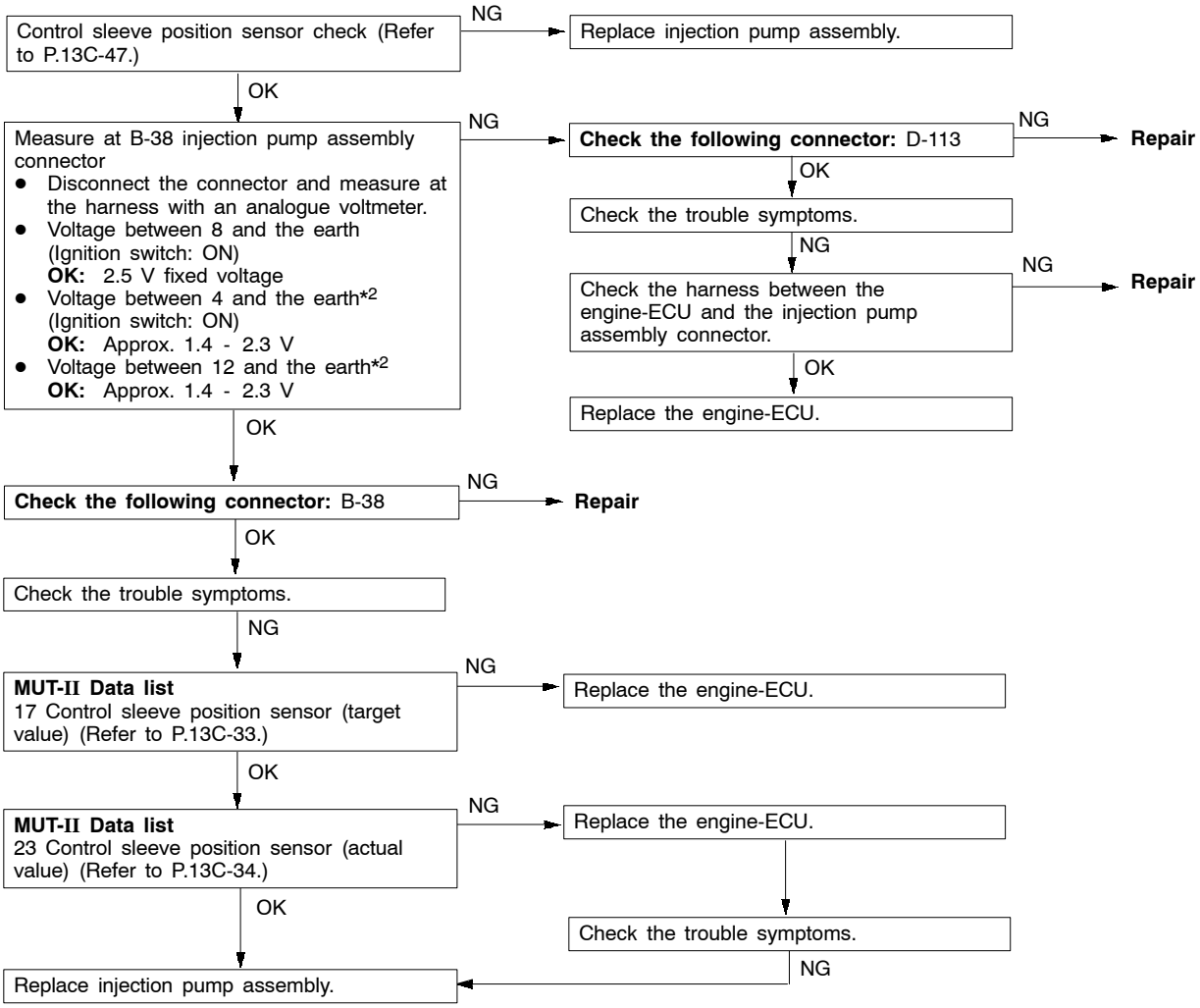


Purchased from www.WorkshopManuals.co.uk

www.WorkshopManuals.co.uk

| Code No. 27 Accelerator pedal position sensor (sub) system | Probable cause |
|---|---|
| Range of Check<br>● Ignition switch: ON, accelerator pedal position sensor (main) operative, except for during engine cranking<br>Set Conditions<br>● Output voltage of accelerator pedal position sensor (main) for 1 second is 0.2V or higher and lower than 2.5V. Output voltage of accelerator pedal position sensor (sub) for 1 second is 4.5V or higher, or lower than 0.2V.<br>Range of Check<br>● Ignition switch: ON, except for during engine cranking<br>Set Conditions<br>● Output voltage of accelerator pedal position sensor (main, sub) for 1 second is 0.2 V or higher or lower than 4.5V. The difference in the output sensor voltage between the main and the sub sensor is 1V or higher, or the idle switch ON, and sensor main output voltage is 1.875V or higher. | ● Accelerator pedal position sensor inoperative<br>● Accelerator pedal position sensor open circuit, short circuit, or connector contact inoperative<br>● Engine-ECU inoperative |

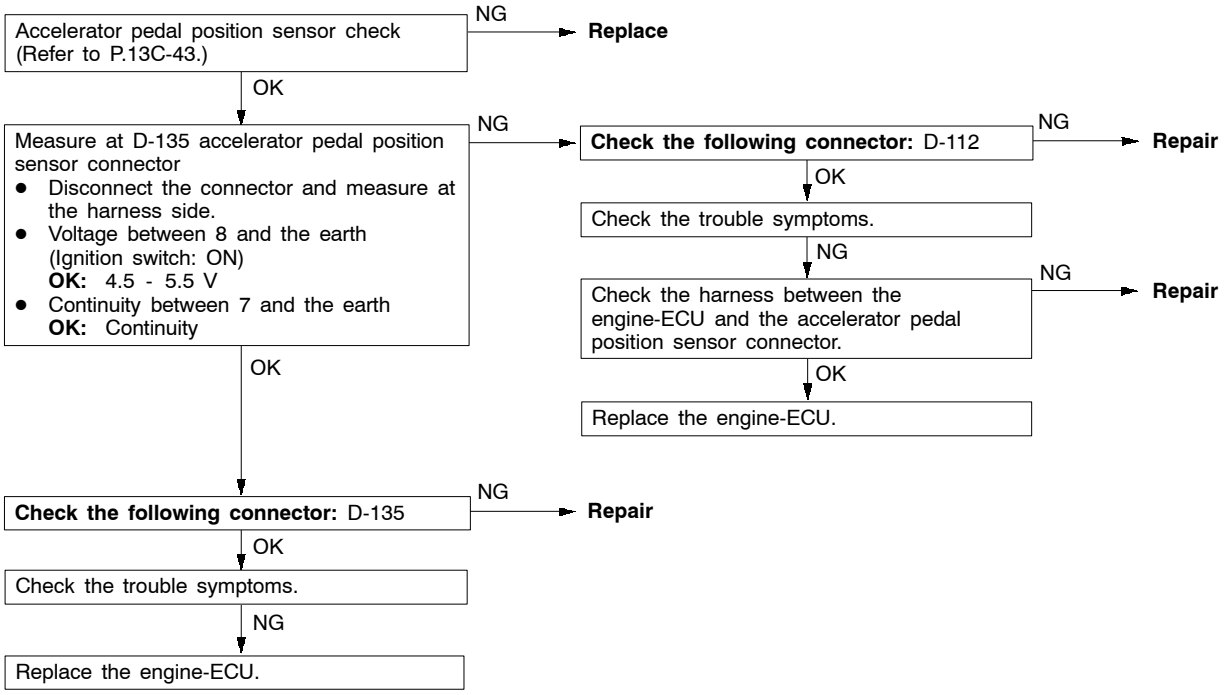


Purchased from www.WorkshopManuals.co.uk

www.WorkshopManuals.co.uk

| Code No. 41 Main throttle solenoid valve system | Probable cause |
|---|---|
| Range of Check<br>● Engine speed is 1600 r/min or higher and the acceleration opening degree is 60% or more.<br>Set Conditions<br>● Boost pressure is lower than barometric pressure + 30 kPa for two seconds.<br>Range of Check<br>● With the idling speed controlled, the engine warmed up, and no failure found<br>Set Conditions<br>● Boost pressure is higher than barometric pressure - 2.7 kPa for 3 seconds. | ● Main throttle solenoid valve inoperative<br>● Main throttle solenoid valve open circuit, short circuit, or connector contact inoperative<br>● Engine-ECU inoperative |

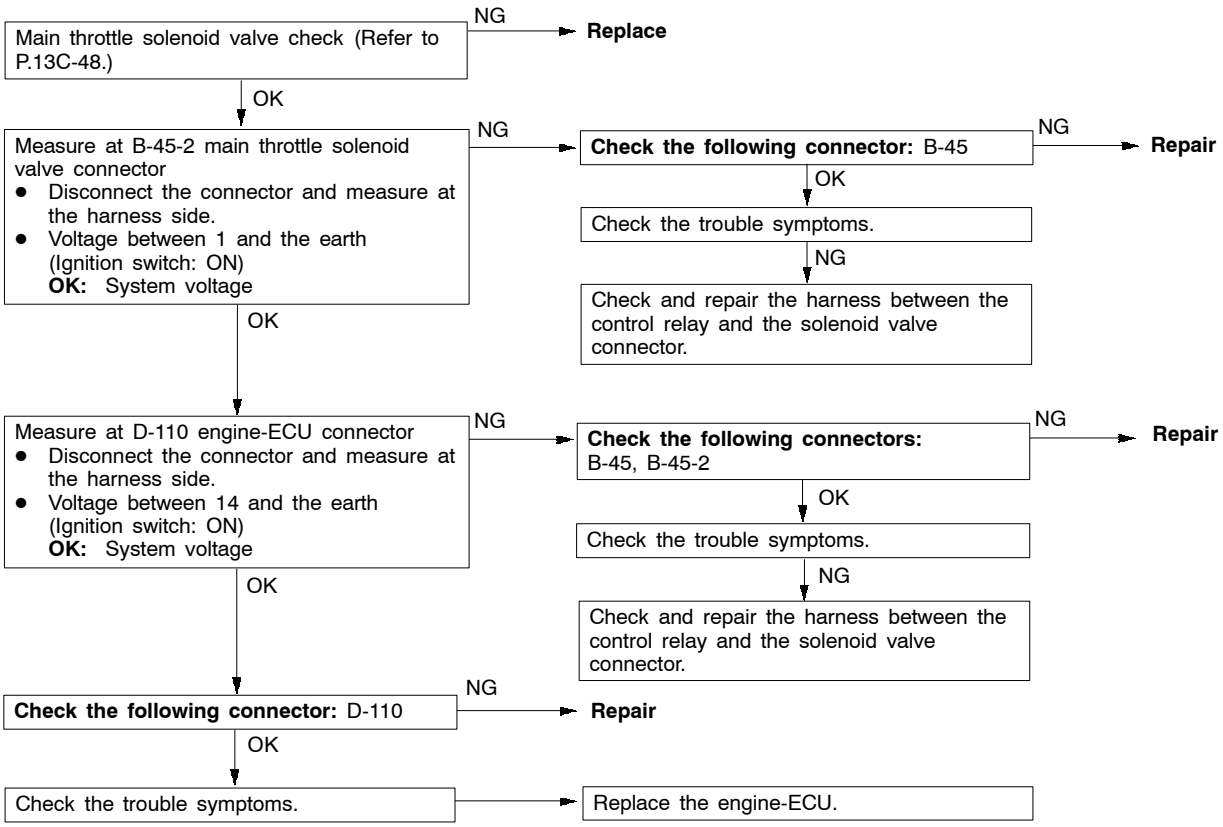


Purchased from www.WorkshopManuals.co.uk

www.WorkshopManuals.co.uk

| Code No. 43 Timing control valve system | Probable cause |
|---|---|
| Range of Check<br>● Engine coolant temperature 80 °C or higher and the engine running<br>Set Conditions<br>● Target value minus actual value is 1 V or more. | ● Timing control valve inoperative<br>● Timing control valve open circuit, short circuit, or connector contact inoperative<br>● Engine-ECU inoperative |

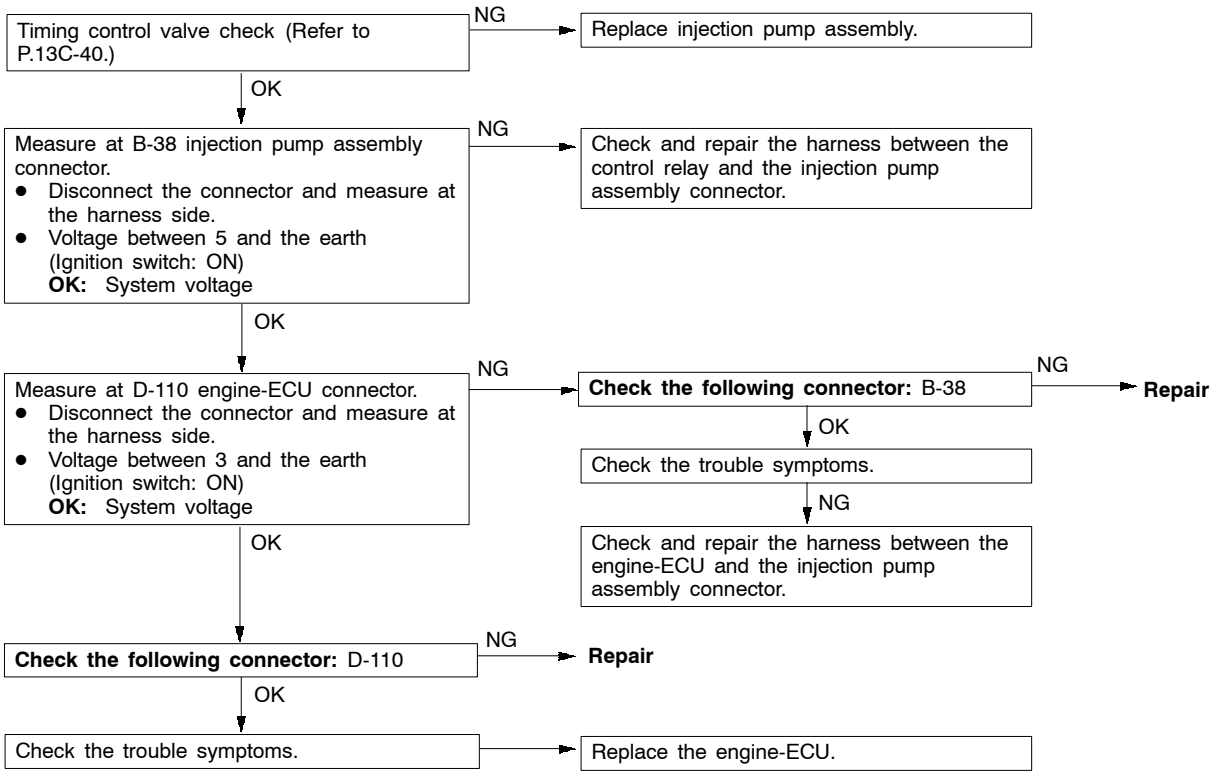


Purchased from www.WorkshopManuals.co.uk

www.WorkshopManuals.co.uk

| Code No. 46 Injection correction ROM system | Probable cause |
|---|---|
| Range of Check<br>● Ignition switch: ON<br>Set Conditions<br>● When communication fails | ● Injection correction ROM inoperative<br>● Engine-ECU inoperative |

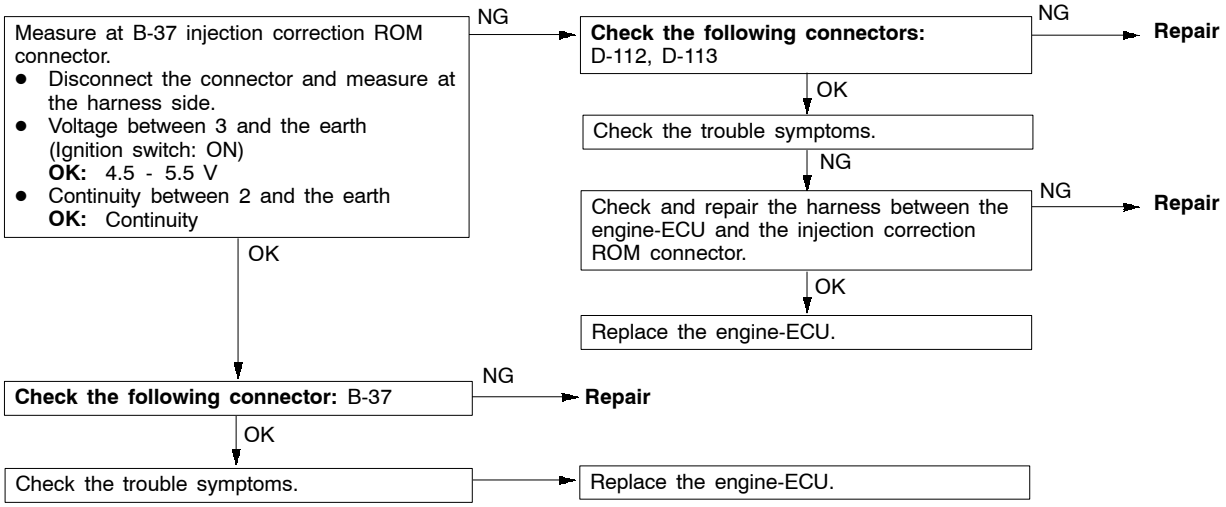


| Code No. 48 GE actuator (in the middle of control sleeve position sensor inoperative) system | Probable cause |
|---|---|
| Range of Check<br>● Ignition switch: ON<br>Set Conditions<br>● Target value minus actual value is 1 V or more. | ● Control sleeve position sensor inoperative<br>● GE actuator inoperative<br>● Control sleeve position sensor open circuit, short circuit, or connector contact inoperative<br>● Engine-ECU inoperative |

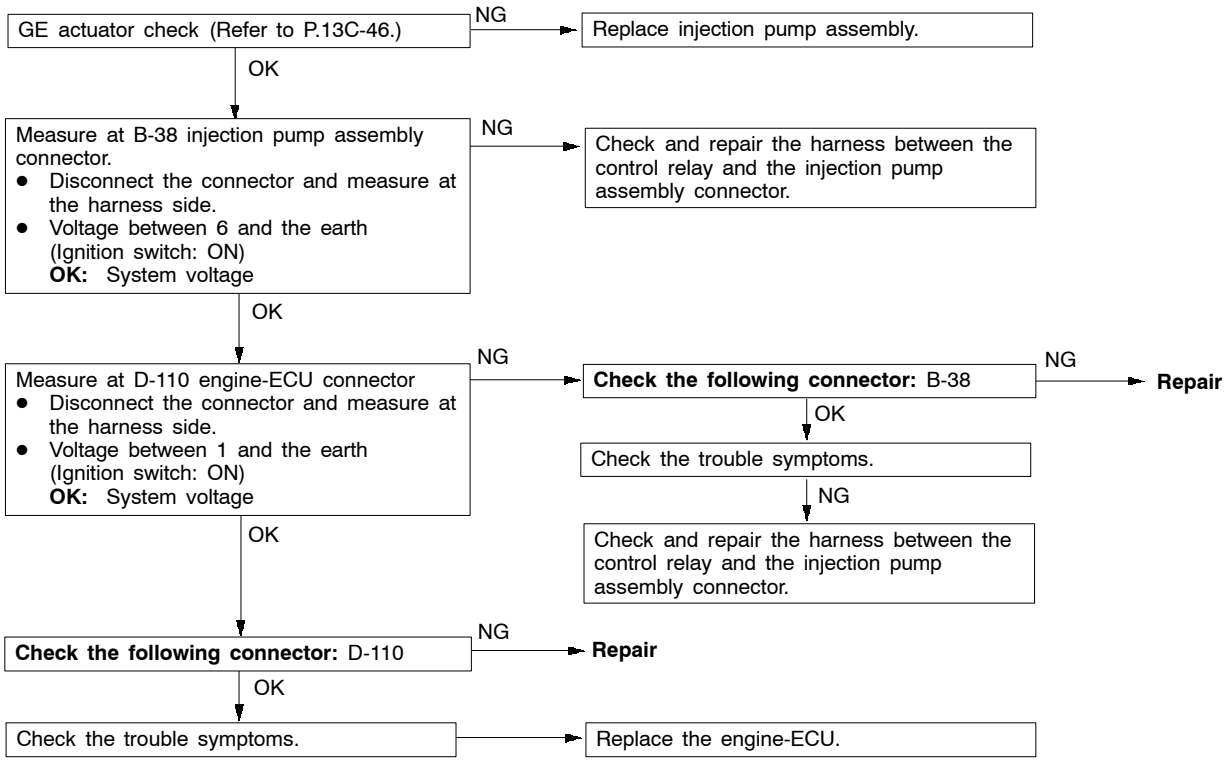


Purchased from www.WorkshopManuals.co.uk

www.WorkshopManuals.co.uk

| Code No. 49 Over boost | Probable cause |
|---|---|
| Range of Check<br>● Ignition switch: ON, except during engine cranking<br>Set Conditions<br>● Boost pressure is higher than 305 kPa for 1 second. | ● Malfunction of the turbocharger waste gate<br>● Engine-ECU inoperative |

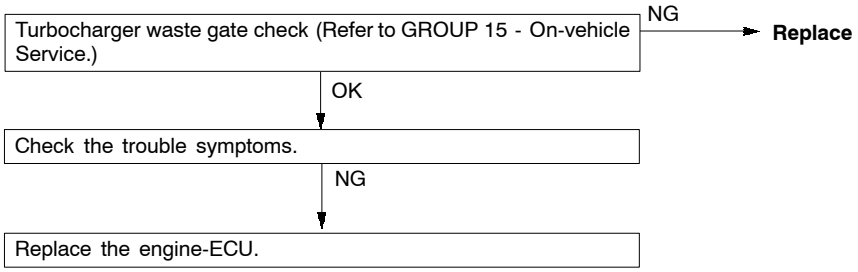


| Code No. 54 Immobilizer system | Probable cause |
|---|---|
| Range of Check<br>● Ignition switch: ON<br>Set Conditions<br>● Improper communication between the engine-ECU and immobilizer-ECU | ● Radio interference of encrypted codes<br>● Incorrect encrypted code<br>● Malfunction of harness or connector<br>● Malfunction of immobilizer-ECU<br>● Engine-ECU inoperative |

NOTE
(1) If the ignition switches are close each other when starting the engine, radio interference may cause this code to be displayed.
(2) This code may be displayed when registering the key encrypted code.

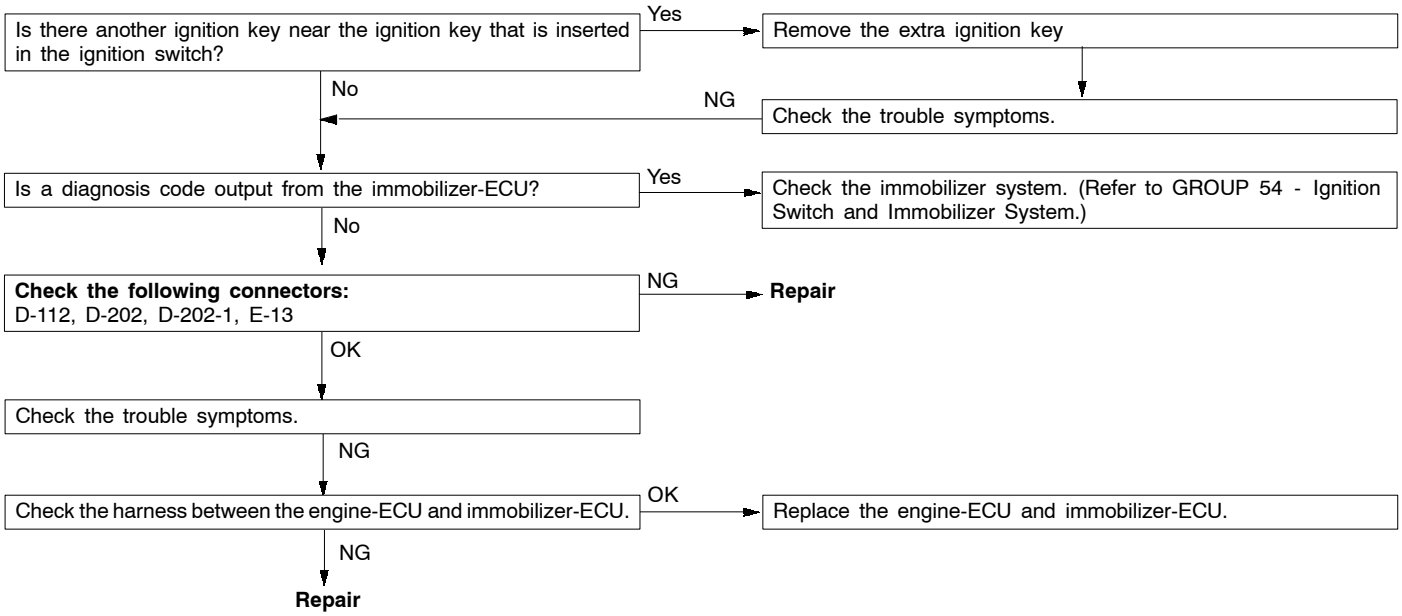


Purchased from www.WorkshopManuals.co.uk

www.WorkshopManuals.co.uk

## INSPECTION CHART FOR TROUBLE SYMPTOMS

| Trouble Symptom | | Inspection procedure No. | Reference page |
|---|---|---|---|
| No communication can be established between MUT-II and the engine-ECU. | No communication can be established with all systems. | 1 | 13C-24 |
| | No communication can be established only with the engine-ECU. | 2 | 13C-24 |
| Engine warning lamp related | Immediately after the ignition switch is “ON”, the engine warning lamp does not turn on. | 3 | 13C-25 |
| | The engine warning lamp keeps on and does not turn off. | 4 | 13C-25 |
| Starting performance | No initial combustion (unable to start) | 5 | 13C-26 |
| | Starting performance is bad when the engine is cold (difficult to start) | 6 | 13C-26 |
| | Starting performance is bad regardless of when the engine is hot or cold (difficult to start) | 7 | 13C-26 |
| Idling stability (idling inoperative) | Low idling speed when the engine is cold (improper idling speed) | 8 | 13C-27 |
| | High idling speed (improper idling speed) | 9 | 13C-27 |
| | Low idling speed (improper idling speed) | 10 | 13C-27 |
| | Idling instable (rough idling, hunting) | 11 | 13C-28 |
| Idling stability (idling sustainment inoperative) | The engine halts after running for a while. | 12 | 13C-28 |
| | The engine halts during idling. | 13 | 13C-29 |
| Driveability | Lack of output power | 14 | 13C-29 |
| | Occurrence of abnormal knocking | 15 | 13C-29 |
| | Abnormal black smoke | 16 | 13C-30 |
| | Abnormal white smoke | 17 | 13C-30 |
| | Hunting during driving | 18 | 13C-31 |

Purchased from www.WorkshopManuals.co.uk

www.WorkshopManuals.co.uk

# INSPECTION PROCEDURES FOR TROUBLE SYMPTOMS

## Inspection procedure 1

| No communication can be established between MUT-II and all systems. | Probable cause |
|---|---|
| Probable cause can be found in troubles with the power supply circuit and the earth circuit to the diagnosis connector. | • Diagnosis connector inoperative<br>• Harness inoperative |

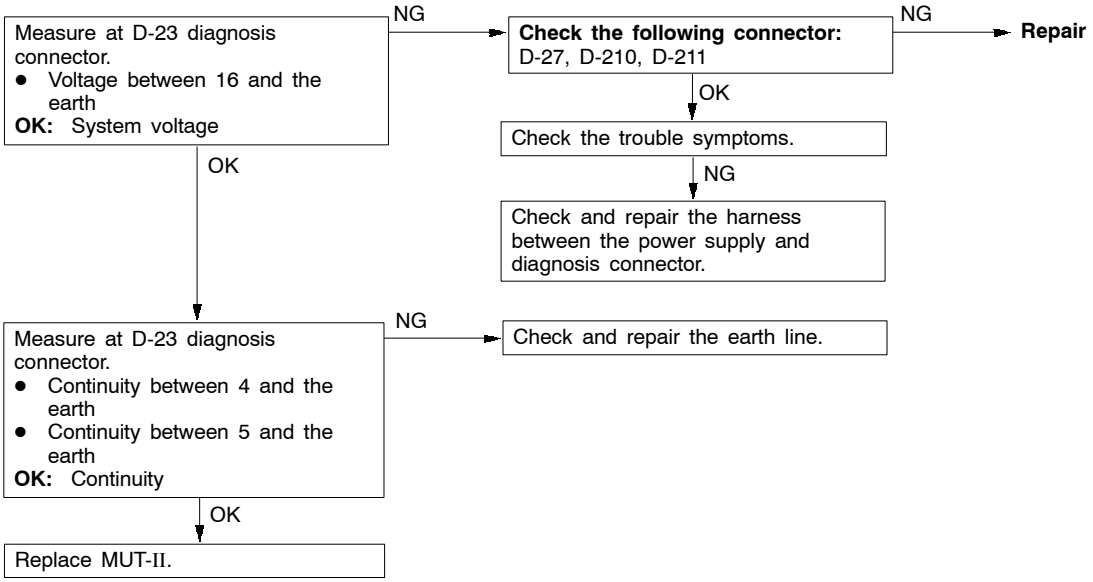


## Inspection procedure 2

| No communication can be established between MUT-II and the engine-ECU. | Probable cause |
|---|---|
| Probable causes are shown in the following:<br>• The power is not supplied to the engine-ECU.<br>• The earth circuit of the engine-ECU inoperative<br>• The engine-ECU inoperative<br>• Communication between the engine-ECU and MUT-II inoperative | • The power supply circuit of the engine-ECU inoperative<br>• Engine-ECU inoperative<br>• Open circuit at the harness between the engine-ECU and the diagnosis connector |

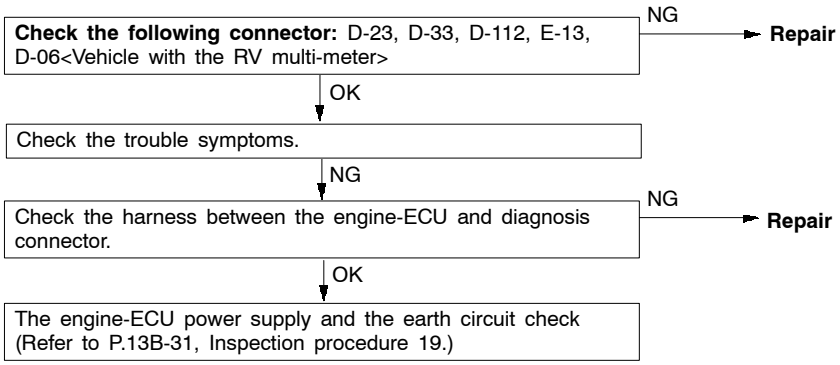


NOTE
If the trouble symptoms persist even after implementing the above-mentioned inspection procedure to the vehicle with center display, check the center display and replace it if necessary. (Refer to GROUP 54A - Clock or Center display.)

Purchased from www.WorkshopManuals.co.uk

www.WorkshopManuals.co.uk

## Inspection procedure 3

| Immediately after the ignition switch is "ON", the engine warning lamp does not turn on. | Probable cause |
|---|---|
| The engine-ECU turns on the engine warning lamp for 5 seconds immediately after turning on the ignition switch to check the bulb for being blown.<br>If the engine warning lamp does not turn on immediately after turning the ignition switch ON, problems shown in the right could exist. | • The engine warning lamp blown<br>• The engine warning lamp circuit inoperative<br>• Engine-ECU inoperative |

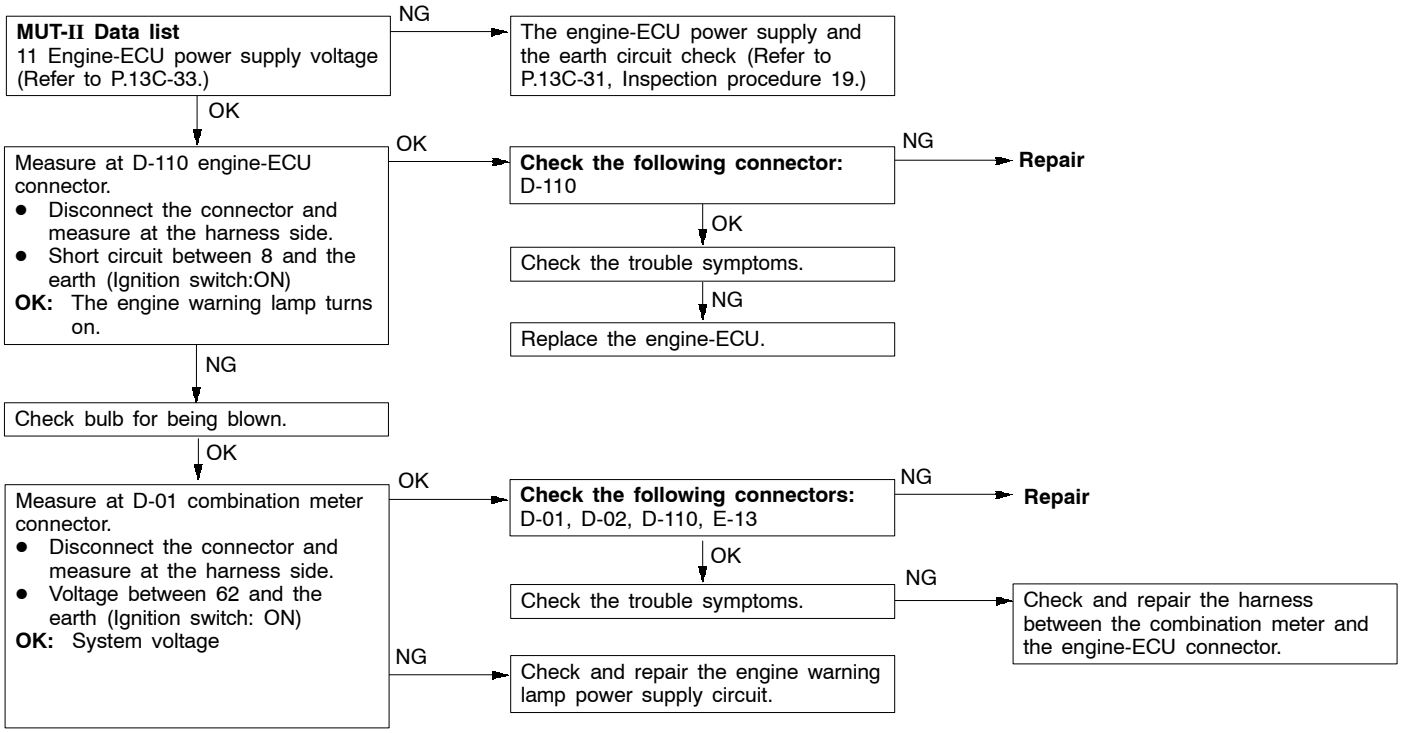


## Inspection procedure 4

| The engine warning lamp keeps on and does not turn off. | Probable cause |
|---|---|
| The probable causes can be found in either the engine-ECU detecting the malfunction in the sensor and/or the actuator, or the problem shown in the right takes place. | • Short circuit at the harness between the engine warning lamp and the engine-ECU<br>• Engine-ECU inoperative |

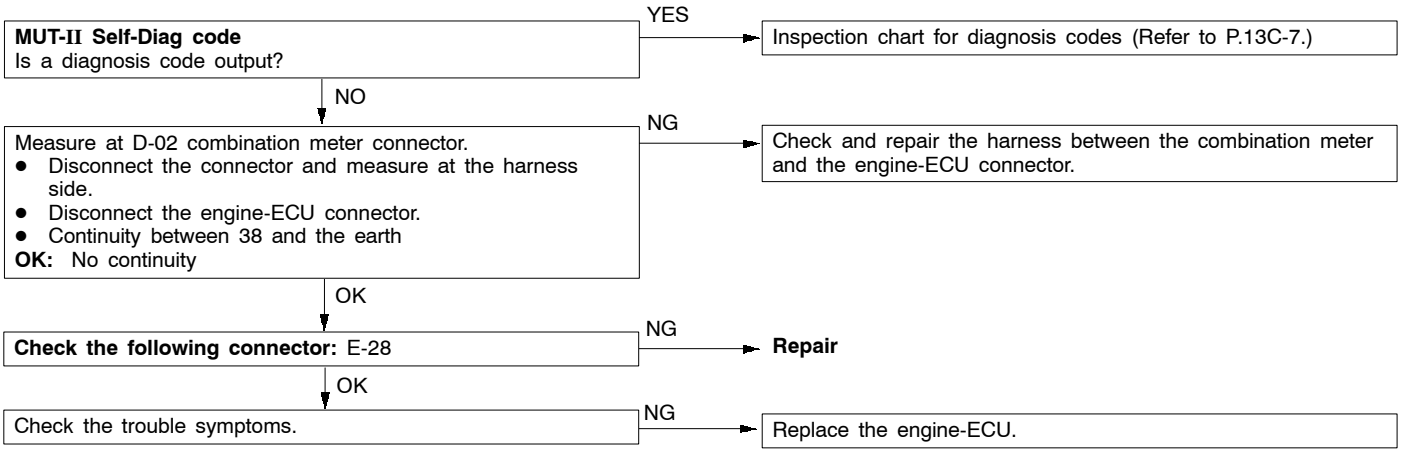


Purchased from www.WorkshopManuals.co.uk

www.WorkshopManuals.co.uk

## Inspection procedure 5

| No initial combustion (unable to start) | Probable cause |
|---|---|
| Probable causes can be found in troubles with control system, injection pump, glow system, and power supply system. | • Control system inoperative<br>• Injection pump inoperative<br>• Glow system inoperative<br>• Engine-ECU inoperative |

**MUT-II Self-Diag code**
Is a diagnosis code output?
- YES → Inspection chart for diagnosis codes (Refer to P.13C-7.)
- NO ↓

Conduct MUT-II Data list check and an actuator test. (Refer to P.13C-30, 37.)
- OK → Check the following items in order:
  - Glow plug, glow plug relay
  - Battery
  - Injection nozzle
  - Injection pump
  - Compression pressure
  - Existence of mixing foreign objects (water, kerosene) with the fuel
- NG ↓ **Repair**

## Inspection procedure 6

| Starting performance is bad when the engine is cold (unable to start) | Probable cause |
|---|---|
| Probable causes can be found in troubles with control system, injection pump, fuel system, intake system, and glow system. | • Control system inoperative<br>• Injection pump inoperative<br>• Fuel system inoperative<br>• Intake system inoperative<br>• Glow system inoperative<br>• Engine-ECU inoperative |

**MUT-II Self-Diag code**
Is a diagnosis code output?
- YES → Inspection chart for diagnosis codes (Refer to P.13C-7.)
- NO ↓

Conduct MUT-II Data list check and an actuator test. (Refer to P.13C-32, 37)
- OK → Inspect the following items in order:
  - Glow plug, glow plug relay
  - Injection nozzle, fuel filter
  - Throttle body assembly
  - Existence of starter switch signal input
  - Engine oil
  - Injection pump
  - Existence of mixing foreign objects (water, kerosene) with the fuel
- NG ↓ **Repair**

## Inspection procedure 7

| Starting performance is bad regardless of whether the engine is hot or cold (unable to start) | Probable cause |
|---|---|
| Probable causes can be found in troubles with control system, injection pump, fuel system, and intake system. | • Control system inoperative<br>• Injection pump inoperative<br>• Fuel system inoperative<br>• Intake system inoperative<br>• Engine-ECU inoperative |

**MUT-II Self-Diag code**
Is a diagnosis code output?
- YES → Inspection chart for diagnosis codes (Refer to P.13C-7.)
- NO ↓

Conduct MUT-II Data list check and an actuator test. (Refer to P.13C-32, 37.)
- OK → Inspect the following items in order:
  - Injection nozzle, fuel filter
  - Throttle body
  - Compression pressure
  - Injection pump
  - Existence of mixing foreign objects (water, kerosene) with the fuel
- NG ↓ **Repair**

Purchased from www.WorkshopManuals.co.uk

www.WorkshopManuals.co.uk

## Inspection procedure 8

| Low idling speed when the engine is cold (improper idling speed) | Probable cause |
|---|---|
| Probable causes can be found in troubles with control system, injection pump, and fuel system. | • Control system inoperative<br>• Injection pump inoperative<br>• Fuel system inoperative<br>• Engine-ECU inoperative |

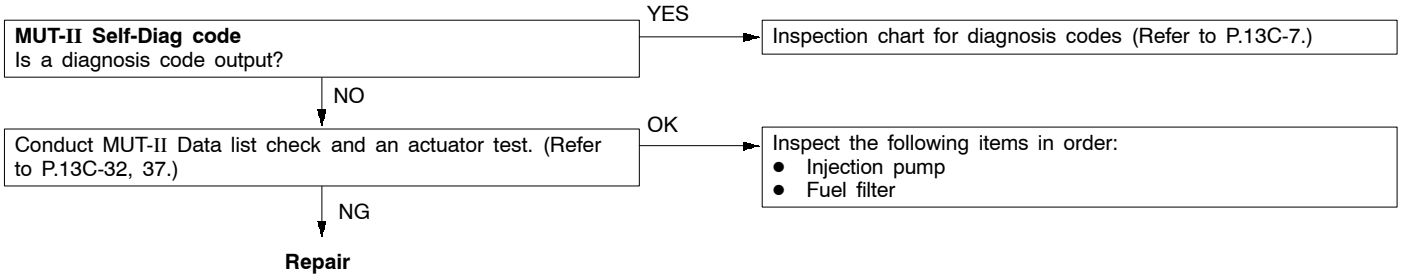


## Inspection procedure 9

| High idling speed (improper idling speed) | Probable cause |
|---|---|
| Probable causes can be found in troubles with control system and injection pump. | • Control system inoperative<br>• Injection pump inoperative<br>• Engine-ECU inoperative |

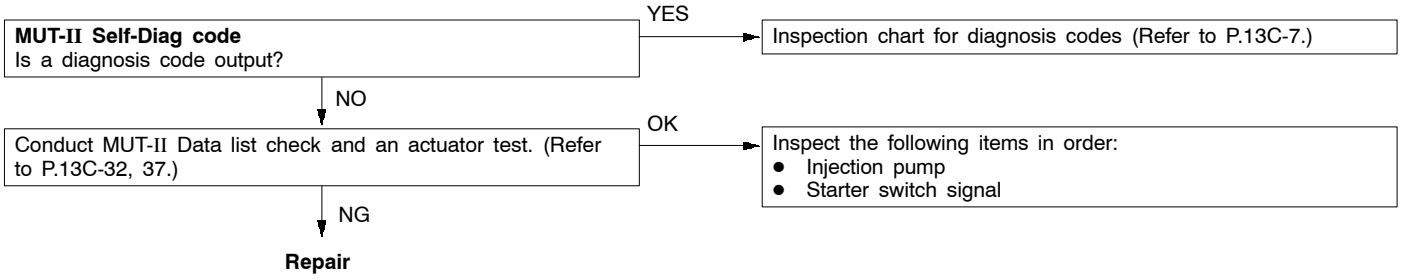


## Inspection procedure 10

| Low idling speed (improper idling speed) | Probable cause |
|---|---|
| Probable causes can be found in troubles with control system, injection pump, and fuel. | • Control system inoperative<br>• Injection pump inoperative<br>• Fuel system inoperative<br>• Engine-ECU inoperative |

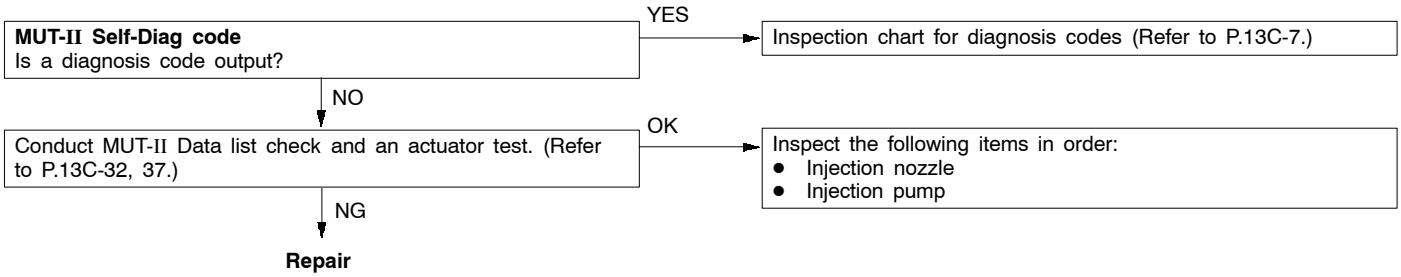


Purchased from www.WorkshopManuals.co.uk

www.WorkshopManuals.co.uk

## Inspection procedure 11

| Idling instable (rough idling, hunting) | Probable cause |
|---|---|
| Probable causes can be found in troubles with control system, injection pump, fuel system, glow system, intake system, and EGR system. | • Control system inoperative<br>• Injection pump inoperative<br>• Fuel system inoperative<br>• Intake system inoperative<br>• Glow system inoperative<br>• EGR system inoperative<br>• Engine-ECU inoperative |

**MUT-II Self-Diag code**
Is a diagnosis code output?

YES → Inspection chart for diagnosis codes (Refer to P.13C-7.)

NO ↓

Conduct MUT-II Data list check and an actuator test. (Refer to P.13C-32, 37.)

OK → Inspect the following items in order:
- Glow plug, glow plug relay
- EGR system
- Injection nozzle
- Compression pressure
- Valve clearance
- Throttle body assembly
- Injection timing
- Fuel line bleeding
- Injection pump

NG ↓

**Repair**

## Inspection procedure 12

| The engine stalls after running for a while. | Probable cause |
|---|---|
| Probable causes can be found in troubles with control system, injection pump, fuel system, and intake system. | • Control system inoperative<br>• Injection pump inoperative<br>• Fuel system inoperative<br>• Intake system inoperative<br>• Engine-ECU inoperative |

**MUT-II Self-Diag code**
Is a diagnosis code output?

YES → Inspection chart for diagnosis codes (Refer to P.13C-7.)

NO ↓

Conduct MUT-II Data list check and an actuator test. (Refer to P.13C-32, 37.)

OK → Inspect the following items in order:
- Throttle body assembly
- Fuel filter
- Injection pump

NG ↓

**Repair**

Purchased from www.WorkshopManuals.co.uk

www.WorkshopManuals.co.uk

## Inspection procedure 13

| The engine stalls during idling. | Probable cause |
|---|---|
| Probable causes can be found in troubles with control system, injection pump, intake system, EGR system, and power supply. | • Control system inoperative<br>• Injection pump inoperative<br>• Fuel system inoperative<br>• EGR system inoperative<br>• Engine-ECU inoperative |

**MUT-II Self-Diag code**
Is a diagnosis code output?

YES → Inspection chart for diagnosis codes (Refer to P.13C-7.)

NO ↓

Conduct MUT-II Data list check and an actuator test. (Refer to P.13C-32, 37.)

OK → Inspect the following items in order:
- Power supply system
- Throttle body assembly
- EGR system
- Injection pump

NG ↓

**Repair**

## Inspection procedure 14

| Lack of output power | Probable cause |
|---|---|
| Probable causes can be found in troubles with control system, injection pump, fuel system, intake system, and EGR system. | • Control system inoperative<br>• Injection pump inoperative<br>• Fuel system inoperative<br>• Intake system inoperative<br>• EGR system inoperative<br>• Engine-ECU inoperative |

**MUT-II Self-Diag code**
Is a diagnosis code output?

YES → Inspection chart for diagnosis codes (Refer to P.13C-7.)

NO ↓

Conduct MUT-II Data list check and an actuator test. (Refer to P.13C-32, 37.)

OK → Inspect the following items in order:
- Injection nozzle, fuel filter
- Throttle body assembly
- EGR system
- Turbocharger
- Compression pressure
- Injection timing
- Injection pump
- Existence of mixing foreign objects (water, kerosene) with the fuel

NG ↓

**Repair**

## Inspection procedure 15

| Occurrence of abnormal knocking | Probable cause |
|---|---|
| Probable causes can be found in troubles with control system, injection pump, fuel system, and EGR system. | • Control system inoperative<br>• Injection pump inoperative<br>• Fuel system inoperative<br>• EGR system inoperative<br>• Engine-ECU inoperative |

**MUT-II Self-Diag code**
Is a diagnosis code output?

YES → Inspection chart for diagnosis codes (Refer to P.13C-7.)

NO ↓

Conduct MUT-II Data list check and an actuator test. (Refer to P.13C-32, 37.)

OK → Inspect the following items in order:
- Injection nozzle
- Injection timing
- EGR system
- Injection pump

NG ↓

**Repair**

Purchased from www.WorkshopManuals.co.uk

www.WorkshopManuals.co.uk

## Inspection procedure 16

| Abnormal black smoke | Probable cause |
|---|---|
| Probable causes can be found in troubles with control system, injection pump, fuel system, intake system, and EGR system. | • Control system inoperative<br>• Injection pump inoperative<br>• Fuel system inoperative<br>• Intake system inoperative<br>• EGR system inoperative<br>• Engine-ECU inoperative |

**MUT-II Self-Diag code**
Is a diagnosis code output?

YES → Inspection chart for diagnosis codes (Refer to P.13C-7.)

NO ↓

Conduct MUT-II Data list check and an actuator test. (Refer to P.13C-32, 37.)

OK → Inspect the following items in order:
- Air cleaner
- Injection nozzle
- Throttle body assembly
- EGR system
- Turbocharger
- Injection pump

NG ↓

**Repair**

## Inspection procedure 17

| Abnormal white smoke | Probable cause |
|---|---|
| Probable causes can be found in troubles with control system, injection pump, fuel system, intake system, EGR system, and glow system. | • Control system inoperative<br>• Injection pump inoperative<br>• Fuel system inoperative<br>• Intake system inoperative<br>• EGR system inoperative<br>• Glow system inoperative<br>• Engine-ECU inoperative |

**MUT-II Self-Diag code**
Is a diagnosis code output?

YES → Inspection chart for diagnosis codes (Refer to P.13C-7.)

NO ↓

Conduct MUT-II Data list check and an actuator test. (Refer to P.13C-32, 37.)

OK → Inspect the following items in order:
- Glow plug, glow plug relay
- Injection nozzle
- Throttle body assembly
- EGR system
- Turbocharger
- Injection pump

NG ↓

**Repair**

Purchased from www.WorkshopManuals.co.uk

www.WorkshopManuals.co.uk

## Inspection procedure 18

| Hunting during driving | Probable cause |
|---|---|
| Probable causes can be found in troubles with control system, injection pump, and fuel system. | • Control system inoperative<br>• Injection pump inoperative<br>• Fuel system inoperative<br>• Engine-ECU inoperative |

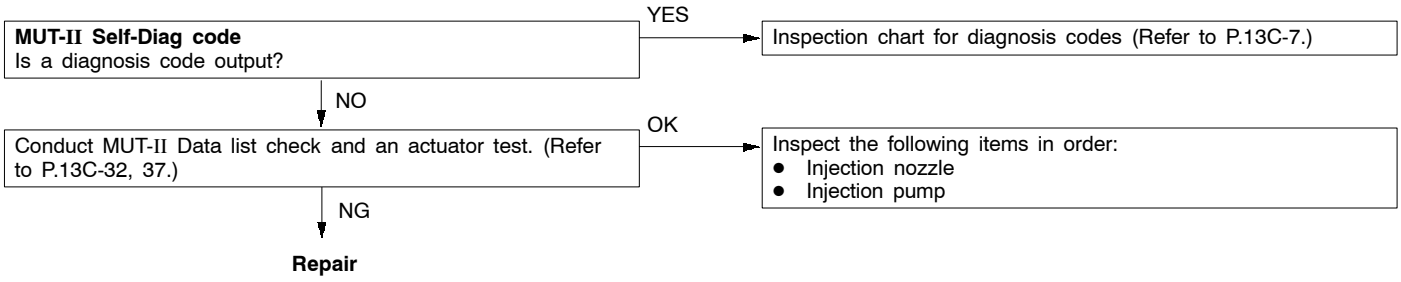


## Inspection procedure 19

### Engine-ECU power supply and earth circuit check

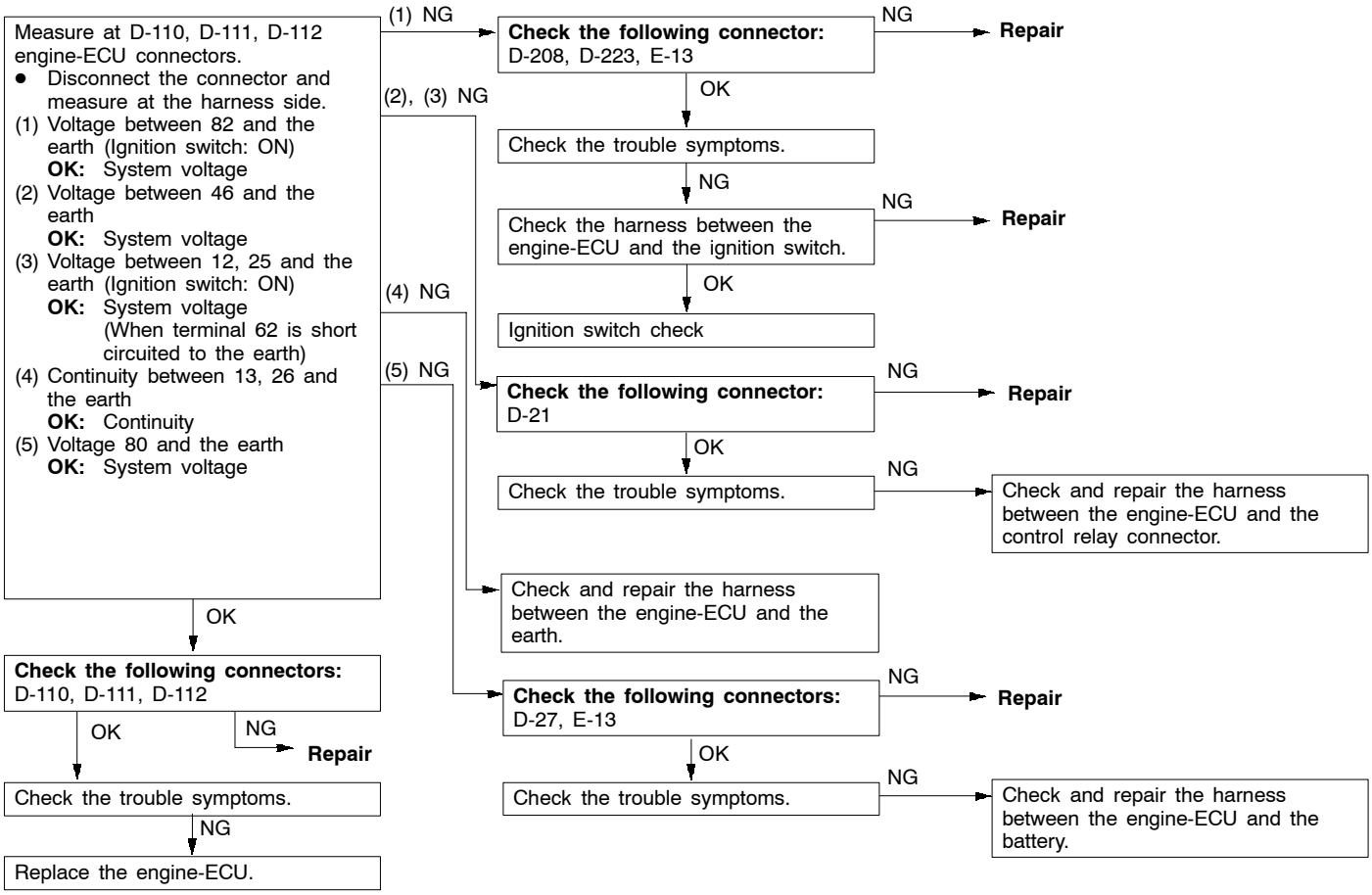


Purchased from www.WorkshopManuals.co.uk

www.WorkshopManuals.co.uk

## DATA LIST REFERENCE TABLE

| Item No. | Check item | Inspection conditions | | Value to be determined as normal | Code No. or inspection procedure No. | Reference page |
|---|---|---|---|---|---|---|
| 01 | Boost air temperature sensor | Ignition switch: ON or the engine running | When the intake air temperature is -20°C | -20°C | Code No. 16 | 13C-11 |
| | | | When the intake air temperature is 0°C | 0°C | | |
| | | | When the intake air temperature is 20°C | 20°C | | |
| | | | When the intake air temperature is 40°C | 40°C | | |
| | | | When the intake air temperature is 80°C | 80°C | | |
| 02 | Engine coolant temperature sensor | Ignition switch: ON or the engine running | When the engine coolant temperature is -20°C | -20°C | Code No. 15 | 13C-11 |
| | | | When the engine coolant temperature is 0°C | 0°C | | |
| | | | When the engine coolant temperature is 20°C | 20°C | | |
| | | | When the engine coolant temperature is 40°C | 40°C | | |
| | | | When the engine coolant temperature is 80°C | 80°C | | |
| 03 | Barometric pressure sensor | Ignition switch: ON | Altitude 0 m | 101 kPa | Code No. 13 | 13C-10 |
| | | | Altitude 600 m | 95 kPa | | |
| | | | Altitude 1,200 m | 88 kPa | | |
| | | | Altitude 1,800 m | 81 kPa | | |
| 04 | Boost pressure sensor | • Engine coolant temperature: 80 - 95 °C<br>• Lamps, electrical cooling fan, and accessories: OFF<br>• Transmission: P range<br>• Ignition switch: ON | Altitude 0 m | 101 kPa | Code No. 12 | 13C-9 |
| | | | Altitude 600 m | 95 kPa | | |
| | | | Altitude 1,200 m | 88 kPa | | |
| | | | Altitude 1,800 m | 81 kPa | | |
| | | | Idling | 81 - 109 kPa | | |
| | | | When sudden racing is done | Increased | | |
| 05 | Fuel temperature sensor | Ignition switch: ON or the engine running | When the fuel temperature is -20°C | -20°C | Code No. 14 | 13C-10 |
| | | | When the fuel temperature is 0°C | 0°C | | |
| | | | When the fuel temperature is 20°C | 20°C | | |
| | | | When the fuel temperature is 40°C | 40°C | | |
| | | | When the fuel temperature is 80°C | 80°C | | |

Purchased from www.WorkshopManuals.co.uk

www.WorkshopManuals.co.uk

| Item No. | Check item | Inspection conditions | | Value to be determined as normal | Code No. or inspection procedure No. | Reference page |
|---|---|---|---|---|---|---|
| 06 | Vehicle speed sensor | When driving | Compare the engine speed displayed in the speed meter with that in MUT-II | Matched | Code No. 17 | 13C-12 |
| 07 | Engine speed sensor (backup) | Engine: Cranking | Compare the engine speed displayed in the tachometer with that in MUT-II | Matched | Code No. 18 | 13C-13 |
| | | Engine: Idling | | | | |
| 08 | Engine speed sensor | Engine: Cranking | Compare the engine speed displayed in the tachometer with that in MUT-II | Matched | Code No. 21 | 13C-14 |
| | | Engine: Idling | | | | |
| 09 | Accelerator pedal position sensor (main) | Ignition switch: ON | Accelerator pedal: Idling position | 0.9 - 1.1V | Code No. 11 | 13C-8 |
| | | | Accelerator pedal: Fully opened position | 4.1 V or higher | | |
| 10 | Idle switch | Ignition switch: ON | Release the foot from the accelerator pedal. | 0 - 1V | Code No. 23 | 13C-15 |
| | | | Step on the accelerator pedal slightly | 4V or higher | | |
| 11 | System voltage | Ignition switch: ON | | System voltage | Procedure No. 19 | 13C-31 |
| 13 | Timing control valve*1 | Engine: After warming up the engine | Idling | 0%*1 | Code No. 25 or No. 43 | 13C-16<br>13C-20 |
| | | | 2,500 r/min | 35 - 45%*1 | | |
| | | | High idling | 20 - 30%*1 | | |
| 14 | EGR command value | Engine: Idling | | 0 - 100%*2 | – | - |
| | | Engine: After warming up the engine | | | | |
| 17 | Control sleeve position (target value) | Engine: After warming up the engine | Idling | 1.535 - 1.735 V | Code No. 26 | 13C-17 |
| | | | 2,500 r/min | Slightly decreased. | | |
| | | | High idling | 1.884 - 2.084 V | | |
| 18 | Actual injection timing | Engine: After warming up the engine | Idling | 0.65 - 0.85 V | – | – |
| | | | 2,500 r/min | 2.325 - 2.525 V | | |
| | | | High idling | 3.814 - 4.014 V | | |
| 19 | Injection timing command value | Engine: After warming up the engine | Idling | 0.3 - 0.5 V | – | – |
| | | | 2,500 r/min | 2.325 - 2.525 V | | |
| | | | High idling | 3.814 - 4.014 V | | |

Purchased from www.WorkshopManuals.co.uk

www.WorkshopManuals.co.uk

| Item No. | Check item | Inspection conditions | | Value to be determined as normal | Code No. or inspection procedure No. | Reference page |
|---|---|---|---|---|---|---|
| 21 | GE actuator | Engine: After warming up the engine | Idling | 20 - 30% | Code No. 26 or No. 48 | 13C-17<br>13C-21 |
| | | | 2,500 r/min | 20 - 30% | | |
| | | | High idling | 20 - 29% | | |
| 22 | EGR duty value | Engine: Idling | | 0 - 100%*2 | – | – |
| | | Engine: After warming up the engine | | | | |
| 23 | Control sleeve position (actual value) | Engine: After warming up the engine | Idling | 1.535 - 1.735 V | Code No. 26 | 13C-17 |
| | | | 2, 500 r/min | Slightly decreased. | | |
| | | | High idling | 1.884 - 2.084 V | | |
| 24 | Accelerator pedal position sensor (sub) | Ignition switch: ON | Accelerator pedal: Idling position | 0.9 - 1.1 V | Code No. 27 | 13C-18 |
| | | | Accelerator pedal: Fully opened position | 4.1V or higher | | |
| 25 | Accelerator pedal position sensor (sub) | Ignition switch: ON | Accelerator pedal: Idling position | 0% | Code No. 27 | 13C-18 |
| | | | Accelerator pedal: Fully opened position | 99 - 100% | | |

NOTE
*1: The opening degree of the timing control valve is converted into percentage. (0%: timer non-advanced angle, 100%: timer maximum advanced angle)
*2: The opening degree of the EGR solenoid valve is converted into percentage.

| Item No. | Check item | Inspection conditions | | Value to be determined as normal | Code No. or inspection procedure No. | Reference page |
|---|---|---|---|---|---|---|
| 41 | Idle switch | Ignition switch: ON (check by repeated accelerator operation) | Release the foot from the accelerator pedal. | ON | – | – |
| | | | Step on the accelerator pedal slightly. | OFF | | |
| 43 | A/C switch | Engine: Idling (The A/C compressor should be in operation when the A/C switch is "ON") | A/C switch: ON | ON | – | – |
| | | | A/C switch: OFF | OFF | | |
| 44 | Ignition switch-ST | Ignition switch: ON | Engine: Stop | OFF | – | – |
| | | | Engine: Cranking | ON | | |
| 45 | Ignition switch-IG | Ignition switch: ON | | ON | – | – |
| 46 | Control relay | Ignition switch: ON | | ON | – | – |
| 47 | A/C relay | Engine: Idling after warming up the engine | A/C switch: OFF | OFF (A/C compressor clutch not in operation) | – | – |
| | | | A/C switch: ON | ON (A/C compressor clutch in operation) | | |

Purchased from www.WorkshopManuals.co.uk

www.WorkshopManuals.co.uk

| Item No. | Check item | Inspection conditions | | Value to be determined as normal | Code No. or inspection procedure No. | Reference page |
|---|---|---|---|---|---|---|
| 50 | Condenser fan relay | Ignition switch: ON | A/C switch: OFF (engine coolant temperature at 109°C or higher)<br>A/C switch: ON (engine coolant temperature at 109°C or higher or no higher than 109°C and the vehicle speed at 60 km/h or slower) | ON | – | – |
| | | | A/C switch: OFF (engine coolant temperature at 109°C or lower)<br>A/C switch: ON (engine coolant temperature at 109°C or lower or no higher than 109°C and the vehicle speed at 60 km/h or faster) | OFF | | |
| 52 | Glow plug relay | Ignition switch: OFF → ON | Engine coolant temperature at 60°C or lower | ON | – | – |
| | | | Engine coolant temperature at 60°C or higher | OFF | | |
| 53 | Main throttle solenoid valve | Ignition switch: ON (Engine stops) | | OFF | – | – |
| | | Engine: Idling after warming up the engine | | ON | | |
| 54 | Sub throttle solenoid valve | Engine: Idling after warming up the engine | | OFF | – | – |
| | | Engine: Idling → Stop (within 3 seconds) | | ON | | |
| 55 | Engine warning lamp | Ignition switch: OFF → ON | | ON (For 5 seconds) | Procedure No. 3 | 13C-25 |
| 56 | Glow lamp | Ignition switch: OFF → ON | The engine coolant temperature at 60°C or lower | ON | – | – |
| | | | The engine coolant temperature at 60°C or higher | OFF | | |

Purchased from www.WorkshopManuals.co.uk

www.WorkshopManuals.co.uk

| Item No. | Check item | Inspection conditions | | Value to be determined as normal | Code No. or inspection procedure No. | Reference page |
|---|---|---|---|---|---|---|
| 58 | Neutral switch | Ignition switch: ON | N, P range | N, P | – | – |
| | | | None of the above | D, R | | |
| 60 | Fuel cut relay | Ignition switch: ON → OFF afterwards for a certain period of time | | ON | – | – |
| | | None of the above | | OFF | | |
| 61 | EGR control solenoid valve No. 2 | Turning off EGR quickly | | ON | – | – |
| | | None of the above | | OFF | | |
| 62 | AT/MT switch | Ignition switch: ON | Vehicles with A/T | A/T | – | – |
| | | | Vehicles with M/T | M/T | | |
| 68 | A/C switch 2 | A/C: Under high load or low load | | ON | – | – |
| | | A/C: OFF or under medium load | | OFF | | |
| 69 | Warm up switch | ● Warm up switch: ON<br>● Heater temperature setting: Maximum<br>● Engine coolant temperature: 90°C or lower<br>● Blower fan: ON | | ON | – | – |
| | | None of the above | | OFF | | |
| 70 | PTC heater | ● Warm up switch: ON<br>● Heater temperature setting: Maximum<br>● Engine coolant temperature: 65°C to 75°C or lower<br>● Blower fan: ON | | ON | – | – |
| | | None of the above | | OFF | | |
| 71 | Power steering switch | Power steering switch: ON | | ON | – | – |
| | | Power steering switch: OFF | | OFF | | |

Purchased from www.WorkshopManuals.co.uk

www.WorkshopManuals.co.uk

## ACTUATOR TEST TABLE

| Item No. | Check item | Drive Contents | Inspection conditions | Value to be determined as normal | Code No. or inspection procedure No. | Reference page |
|---|---|---|---|---|---|---|
| 02 | Glow plug relay | Turning the relay from OFF to ON or from ON to OFF | Ignition switch: ON | Battery charge is energized to the glow plug when the glow plug relay is ON. | – | – |
| 03 | A/C compressor relay | Turning the relay from OFF to ON or from ON to OFF | Ignition switch: ON | The A/C compressor clutch makes an audible sound. | – | – |
| 11 | Timing control valve | Turn the timing control valve to ON | • Ignition switch: ON<br>• Engine: Idling<br>• Timer piston position sensor: Normal | Makes an audible sound | Code No.43 | 13C-20 |
| 12 | | Turn the timing control valve to OFF | | | | |
| 15 | Glow lamp | Turn the glow lamp on or off | Ignition switch: ON | The glow lamp turns on | – | – |
| 16 | Warning lamp | Turn the warning lamp on or off | Ignition switch: ON | The warning lamp turns on | Procedure No.3, 4 | 13C-25 |
| 22 | Condenser fan relay | Turning the relay from OFF to ON or from ON to OFF | Ignition switch: ON | The condenser fan rotates. | – | – |
| 23 | Main throttle solenoid valve | Turn the solenoid valve from OFF to ON or from ON to OFF | • Ignition switch: ON<br>• Vehicle speed: 0 km/h<br>• Engine speed: 1,000 r/min or lower | Makes an audible sound | Code No.41 | 13C-19 |
| 24 | Sub throttle solenoid valve | Turn the solenoid valve from OFF to ON or from ON to OFF | • Ignition switch: ON<br>• Vehicle speed: 0 km/h<br>• Engine speed: 1,000 r/min or lower | Makes an audible sound | – | – |

Purchased from www.WorkshopManuals.co.uk

www.WorkshopManuals.co.uk

| Item No. | Check item | Drive Contents | Inspection conditions | Value to be determined as normal | Code No. or inspection procedure No. | Reference page |
|---|---|---|---|---|---|---|
| 25 | GE actuator | Turn the GE actuator to ON | • Ignition switch: ON<br>• Engine speed: 0 r/min or lower<br>• Control sleeve position sensor: Normal | Makes an audible sound | Code No.48 | 13C-21 |
| 26 | | Turn the GE actuator to OFF | | | | |
| 27 | Fuel cut solenoid valve | Turn the solenoid valve to ON | • Ignition switch: ON<br>• Vehicle speed: 0 km/h | Makes an audible sound | – | – |
| 28 | EGR solenoid valve No.1 | Turn the solenoid valve to ON | • Ignition switch: ON<br>• Vehicle speed: 0 km/h | Makes an audible sound | – | – |
| 29 | | Turn the solenoid valve to ON | | | | |
| 30 | EGR solenoid valve No.2 | Turn the solenoid valve from OFF to ON or from ON to OFF | • Ignition switch: ON<br>• Vehicle speed: 0 km/h | Makes an audible sound | – | – |
| 33 | PTC heater | Switch the PTC heater relay ON/OFF. | • Ignition switch: ON | Voltage on the ECU terminal No.9: 0 - 1V | – | – |
| 34 | Middle position of GE actuator | Hold the injection governor in its middle position. | • Ignition switch: ON | When the crankshaft is turned clockwise during the adjustment of the injection timing, the injection pipes spray out fuel. | Code No.48 | 13C-21 |

Purchased from www.WorkshopManuals.co.uk

www.WorkshopManuals.co.uk

## ENGINE-ECU CHECK

### TERMINAL VOLTAGE TABLE

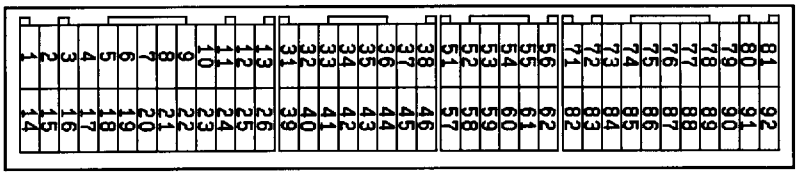

W6106AQ

| Terminal No. | Check item | Inspection conditions (engine status) | | Normal condition: |
|---|---|---|---|---|
| 1 | GE actuator | Ignition switch: ON (Engine stops) | | 9 V or higher |
| 2 | Fuel cut solenoid valve | Ignition switch: OFF → ST | | 0 - 1 V |
| | | Engine: Idling → Stop (in about 1 second) | | System voltage |
| 3 | Timing control valve | Ignition switch: ON (Engine stops) | | 11 V or higher |
| 4 | Glow lamp | ● Engine coolant temperature: 40°C or lower<br>● Ignition switch: OFF → ON | | 0 - 1 V (In about 1 second: at 20°C) → System voltage |
| 5 | EGR control solenoid valve No. 2 | Ignition switch: OFF → ON | | System voltage |
| | | Engine: After warming up the engine, conduct sudden racing from idling. | | Decreased momentarily |
| 7 | Condenser fan relay | Condenser fan in operation | | 0 - 1 V |
| 8 | Engine warning lamp | Ignition switch: OFF → ON | | 0 -1 V (In few seconds) → System voltage |
| 9 | PTC heater relay | Heating switch: ON, outside temperature at 10°C or lower, and the engine coolant temperature at 65°C or lower | | 0 - 1 V |
| 14 | Main throttle solenoid valve | Ignition switch: ON (Engine stops) | | System voltage |
| | | Engine: After warming up the engine, conduct sudden racing from idling. | | 0 - 1 V |
| 16 | Glow plug relay | ● Engine coolant temperature: 40°C or lower<br>● Ignition switch: OFF → ON | | System voltage (In about 8 seconds: at 20°C) → 0 - 1 V |
| 18 | Sub throttle solenoid valve | Engine: Idling | | System voltage |
| | | Engine: Idling → Stop (within approx. 3 seconds) | | 0 - 1 V |
| 21 | A/C relay | A/C switch: ON | | 0 - 1 V |
| 31 | Idle switch | Ignition switch: ON | Release the foot from the accelerator pedal. | 0 - 1 V |
| | | | Step on the accelerator pedal slightly | 4 V or higher |
| 32 | A/C switch | A/C in operation (compressor in operation) | | System voltage |
| 35 | Power steering fluid pressure switch | Engine: Idling after warming up the engine | When turning steering wheel | 0 - 1 V |

Purchased from www.WorkshopManuals.co.uk

www.WorkshopManuals.co.uk

| Terminal No. | Check item | Inspection conditions (engine status) | | Normal condition: |
|---|---|---|---|---|
| 36 | Selector switch between A/T and M/T | Ignition switch: ON | | 0 - 1 V |
| 37 | Inhibitor switch | Ignition switch: ON (Engine stops) | Set the selector lever to P or N | 0 - 1 V |
| | | | Set the selector lever to D, 2, L, or R | System voltage |
| 39 | Stop lamp switch | Depress the brake pedal | | System voltage |
| 40 | Brake switch | Depress the brake pedal | | 0 - 1 V |
| 46 | Control relay | Ignition switch: ON | | 0 - 1 V |
| | | Ignition switch: ON → OFF (in about 8 seconds) | | System voltage |
| 51 | Engine speed sensor (backup) | Engine: Idling | | 1.5 - 2.5 V |
| 55 | Accelerator pedal position sensor (sub) | Ignition switch: ON | Accelerator pedal: Idling position | 0.9 - 1.1 V |
| | | | Accelerator pedal: Fully opened position | 4.1 V or higher |
| 71 | Ignition switch-ST | Engine: Cranking | | 8 V or higher |
| 74 | Control sleeve position sensor | Ignition switch: ON (Engine stops) | | 2.2 - 2.7 V |
| 73 | | | | 2.0 - 4.0 V |
| 75 | | | | 2.0 - 4.0 V |
| 76 | Timer piston position sensor | Ignition switch: ON (Engine stops) | | 2.2 - 2.7 V |
| 77 | | | | 2.0 - 4.0 V |
| 78 | | | | 2.0 - 4.0 V |
| 80 | Back-up power supply | Ignition switch: OFF | | System voltage |
| 82 | Ignition switch-IG | Ignition switch: ON | | System voltage |
| 83 | Engine coolant temperature sensor | Ignition switch: ON | Engine coolant temperature: 0°C | 3.4 - 4.5 V |
| | | | Engine coolant temperature: 20°C | 2.6 - 3.6 V |
| | | | Engine coolant temperature: 40°C | 1.8 - 2.5 V |
| | | | Engine coolant temperature: 80°C | 0.7 - 1.1 V |
| 84 | Accelerator pedal position sensor (main) | Ignition switch: ON | Accelerator pedal: Idling position | 0.9 - 1.1 V |
| | | | Accelerator pedal: Fully opened position | 4.1 V or higher |
| 85 | Boost pressure sensor | Ignition switch: ON (760 mmHg) | | 1.2 - 1.6 V |
| 86 | Vehicle speed sensor | • Ignition switch: ON<br>• Move the vehicle forward slowly | | 0 V ↔ 5 V (repeat the change) |

Purchased from www.WorkshopManuals.co.uk

www.WorkshopManuals.co.uk

| Terminal No. | Check item | Inspection conditions (engine status) | | Normal condition: |
|---|---|---|---|---|
| 87 | Fuel temperature sensor | Ignition switch: ON | Fuel temperature: 0°C | 3.2 - 3.6 V |
| | | | Fuel temperature: 20°C | 2.3 - 2.7 V |
| | | | Fuel temperature: 40°C | 1.4 - 1.8 V |
| | | | Fuel temperature: 80°C | 0.4 - 0.8 V |
| 88 | Boost air temperature sensor | Ignition switch: ON | Intake air temperature: 0°C | 3.2 - 3.8 V |
| | | | Intake air temperature: 20°C | 2.3 - 2.9 V |
| | | | Intake air temperature: 40°C | 1.5 - 2.1 V |
| | | | Intake air temperature: 80°C | 0.4 - 1.0 V |
| 89 | Engine speed sensor | Engine: Idling | | 1.5 - 2.5 V |
| 91 | Neutral switch | Ignition switch: ON (Engine stops) | Set the selector lever to P or N | 0 - 1 V |
| | | | Set the selector lever to D, 2, L, or R | System voltage |

Purchased from www.WorkshopManuals.co.uk

www.WorkshopManuals.co.uk

# ON-VEHICLE SERVICE

## INJECTION TIMING CHECK AND ADJUSTMENT

Refer to GROUP 11C - Engine Adjustment.

## IDLE SPEED CHECK AND ADJUSTMENT

Refer to GROUP 11C - Engine Adjustment.

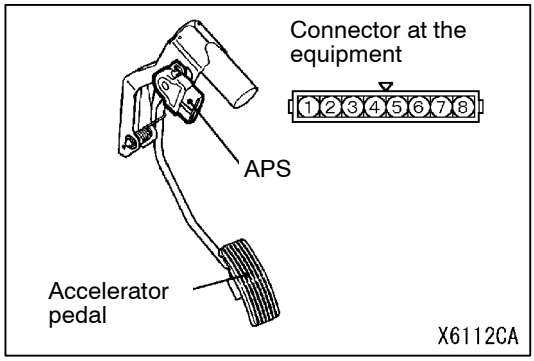


## ACCELERATOR PEDAL POSITION SENSOR (APS) ADJUSTMENT

**Caution**

**(1) APS is properly adjusted in the factory. Therefore, APS should not be moved carelessly.**

**(2) If the adjustment is not done correctly, carry out a new adjustment in the following procedure:**

1. Remove accelerator pedal complete.

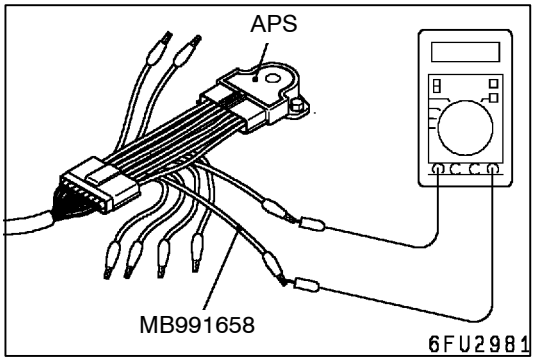


2. Connect MUT-II to the diagnosis connector. If MUT-II is not used, the following operation should be done:
   (1) Disconnect APS connector and connect the special tool (test harness: MB991658) between two connectors.
   (Be careful not to take a wrong terminal No.)
   (2) Connect a digital voltmeter between APS connector terminal No. 3 (APS1 output) and terminal No.1 (APS1 earth).
3. Loosen the APS mounting bolt to make it temporarily tightened.

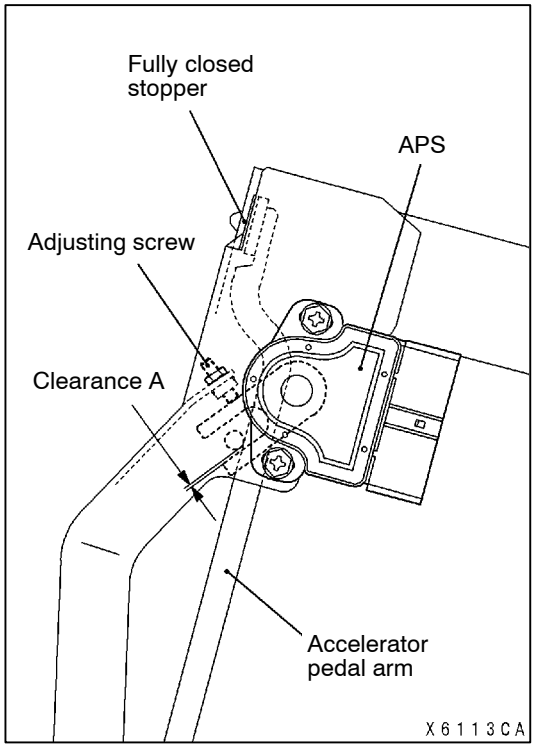


4. Ensure that the accelerator pedal arm contacts the closing stopper.
5. Use the adjusting screw to make the clearance A (shown in the illustration) between 0.5 and 0.93 mm.
6. Secure the adjusting screw with the lock nut.
7. Turn on the ignition switch. (Engine does not start.)
8. Turn APS to make APS1 output the standard value.

   **Standard value: 0.985 - 1.085 V**

9. Tighten the APS mounting bolt securely.
10. Install the accelerator pedal complete.

Purchased from www.WorkshopManuals.co.uk

www.WorkshopManuals.co.uk

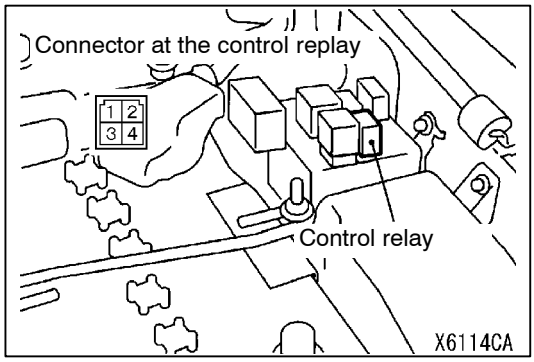


## CONTROL RELAY CONTINUITY CHECK

| System voltage | Terminal No. | | | |
|---|---|---|---|---|
| | 1 | 2 | 3 | 4 |
| When no current is supplied | | ○ | | ○ |
| When current is supplied | ○ | ⊕ | ○ | ⊖ |

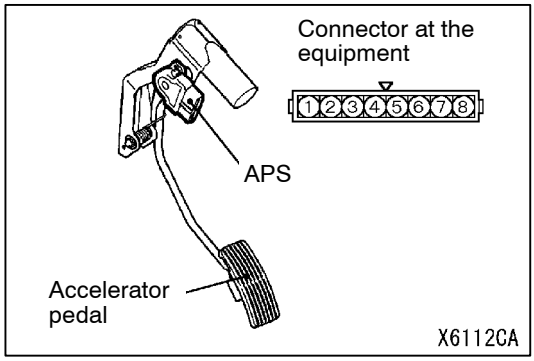


## ACCELERATOR PEDAL POSITION SENSOR (APS) CHECK

1. Disconnect the APS connector.
2. Measure the resistance between APS connector terminal No.2 (APS1 power supply) and the terminal No.1 (APS1 earth) as well as the resistance between terminal No.8 (APS2 power supply) and terminal No.7 (APS2 output).

   **Standard value: 3.5 - 6.5 kΩ**
3. Measure the resistance between APS connector terminal No.2 (APS1 power supply) and the terminal No.3 (APS1 output) as well as the resistance between terminal No.8 (APS2 power supply) and terminal No.7 (APS2 earth).

   **Normal condition:**

| | |
|---|---|
| Step on the accelerator pedal slowly. | Resistance smoothly changes in proportion to the travel of the accelerator pedal. |

4. If the APS is out of the range of the standard value or the resistance does not change smoothly, replace APS.

   NOTE
   Make an adjustment on APS after replacement. (Refer to P.13C-42.)

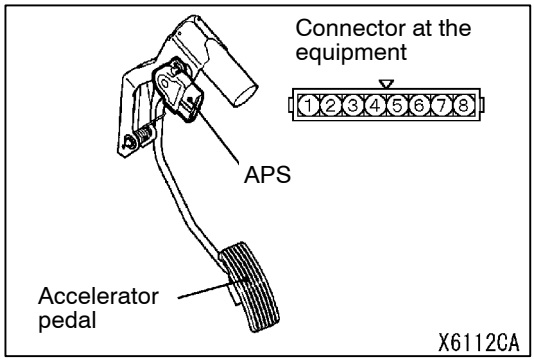


## IDLE SWITCH CHECK

1. Disconnect the accelerator pedal position sensor (APS) connector.
2. Check the continuity between the idle switch connector terminal No.4 (idle switch) and terminal No.5 (earth).

Purchased from www.WorkshopManuals.co.uk

www.WorkshopManuals.co.uk

**Normal condition:**

| | |
|---|---|
| Accelerator pedal | Continuity |
| Step on | None |
| Release | Yes |

3. Replace APS if it is inoperative.

   NOTE
   Make an adjustment on APS after replacement.(Refer to P.13C-42.)

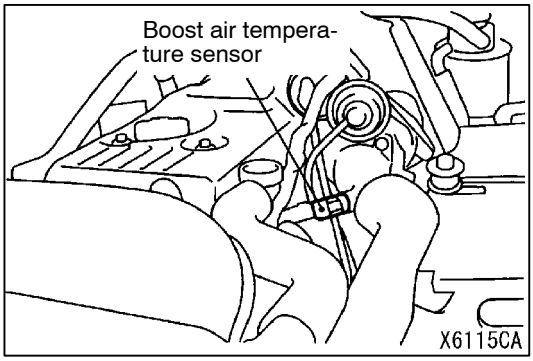


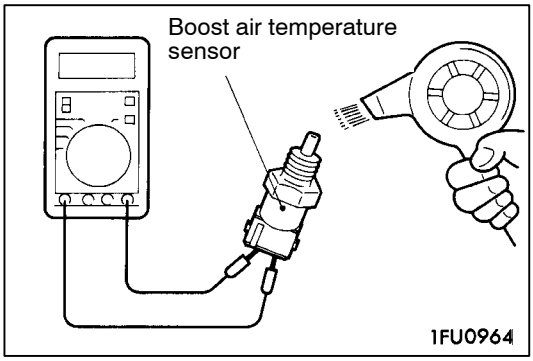


## BOOST AIR TEMPERATURE SENSOR (INTAKE AIR TEMPERATURE SENSOR) CHECK

1. Remove the boost air temperature sensor.
2. Measure the resistance at the boost air temperature sensor connector terminal.

   **Standard value:**
   **2.3 - 2.9 kΩ (at 20°C)**
   **0.3 - 0.39 kΩ (at 80°C)**

3. Measure the resistance at the sensor part being warmed up by a hair dryer.

   **Normal condition:**

| Temperature (°C) | Resistance value (kΩ) |
|---|---|
| Rising | Become smaller |

4. If the resistance is not within the range of the standard value or does not change at all, replace the boost air temperature sensor.

   NOTE
   Replace the gasket as well.

5. Tighten the boost air temperature sensor to the specified torque.

   **Tightening torque: 15 ± 1 N·m**

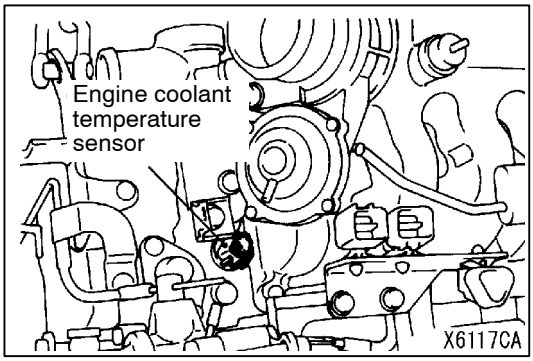


## ENGINE COOLANT TEMPERATURE SENSOR CHECK

1. Remove the engine coolant temperature sensor.

Purchased from www.WorkshopManuals.co.uk

www.WorkshopManuals.co.uk

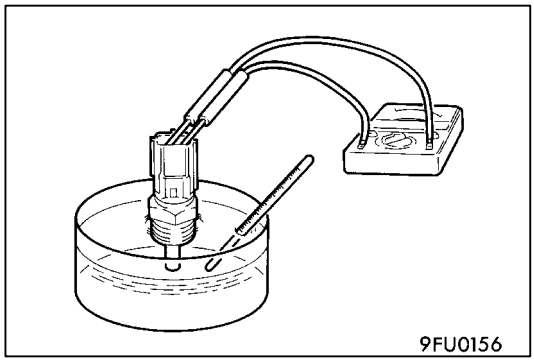


2. Measure the resistance between the terminals of the connectors while immersing the sensor part of the engine coolant temperature sensor in the hot water.

   **Standard value:**
   **2.3 - 2.6 kΩ (at 20°C)**
   **0.30 - 0.34 kΩ (at 80°C)**

3. If the resistance is not within the range of the standard value, replace the engine coolant temperature sensor.

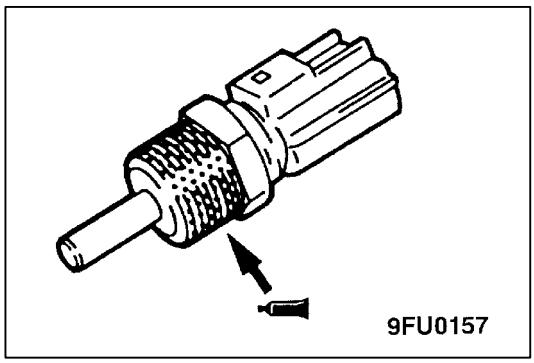


4. Apply the sealant to the thread of the engine coolant temperature sensor and tighten it to the specified torque.

   **Sealant:**
   **3M Nut Locking Part No. 4171 or equivalent**

   **Tightening torque: 40 ± 4 N·m**

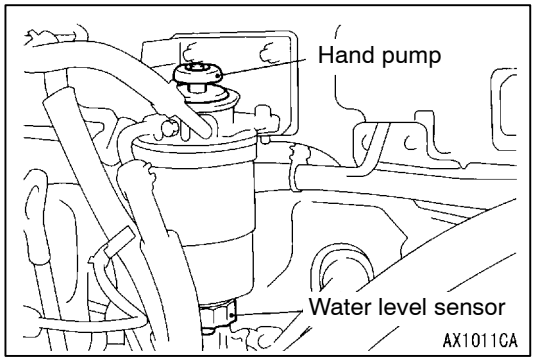


## EVACUATION OF WATER FROM FUEL FILTER

Water is in the filter when fuel filter warning lamp illuminates. Evacuate water by the following procedure.

1. Loosen the water level sensor.
2. After water is evacuated by using a hand pump, tighten the water level sensor to the specified torque.
   **Tightening torque: 2.5 ± 0.5 N·m**

## FUEL FILTER CARTRIDGE REPLACEMENT

Refer to GROUP 13D.

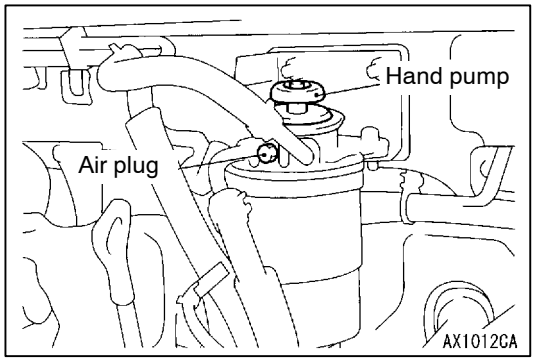


## EVACUATION OF AIR FROM FUEL LINE

When the following service work(s) is done, refill the fuel tank and then evacuate air from the fuel line.

- Fuel hose is removed
- Fuel filter is replaced
- Fuel injection nozzle is removed
- If necessary for access, fuel is drained from the fuel tank.

1. Loosen the fuel filter air plug.

Purchased from www.WorkshopManuals.co.uk

www.WorkshopManuals.co.uk

2. Cover the circumference of the air plug hole with cloth and use a manual pump repeatedly until no bubbles come out of the plug hole, then tighten the air plug to the specified torque.
   **Tightening torque: 6.0 ± 1.0 N·m**
3. Repeat until the hand pump operation becomes stiff.

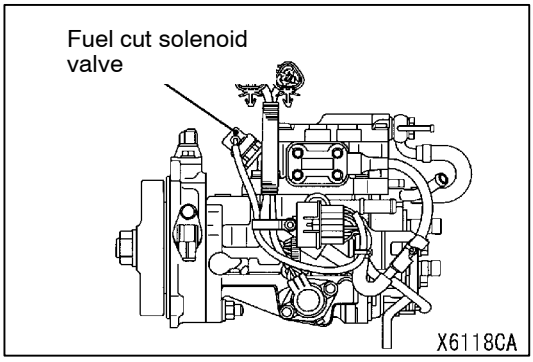


## FUEL INJECTION PUMP CHECK

### FUEL CUT SOLENOID VALVE CHECK

#### Operation noise check

1. Attach the sound scope to the fuel cut solenoid valve to check for running noise when the ignition switch is "ON".

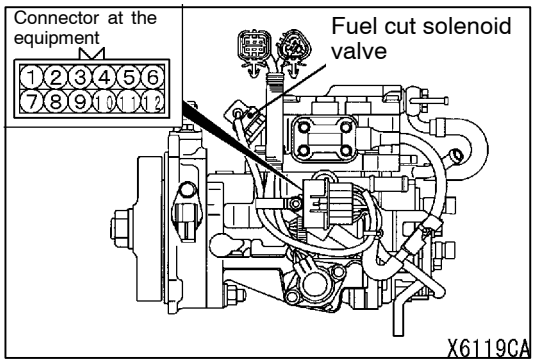


#### Coil resistance check

1. Disconnect the injection pump connector (12 pin).
2. Measure the resistance between terminal No.1 (fuel cut solenoid valve) and the injection pump body.

   **Standard value: 6.8 - 9.2 Ω**

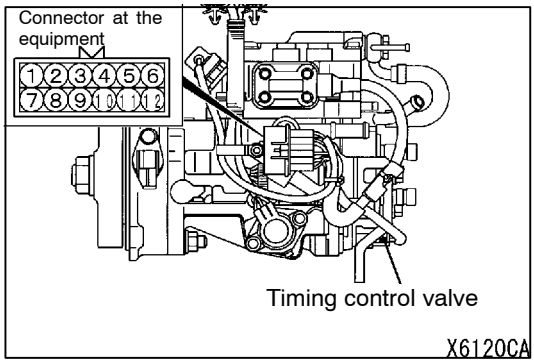


#### Timing control valve check

1. Disconnect the injection pump connector (12 pin).
2. Measure the resistance between terminal No.5 and terminal No.9.

   **Standard value: 10.8 - 11.2 Ω**

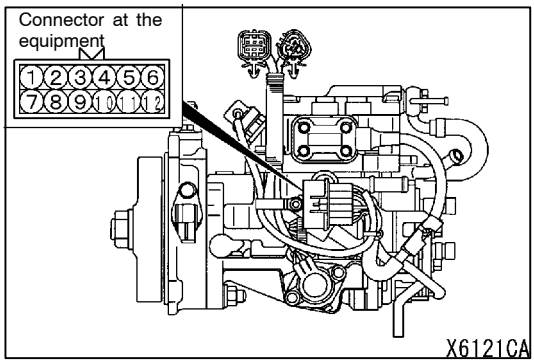


#### GE actuator (electronic governor) check

1. Disconnect the injection pump connector (12 pin).
2. Measure the resistance between terminal No.6 and terminal No.10.

   **Standard value: 0.64 - 0.72 Ω**

Purchased from www.WorkshopManuals.co.uk

www.WorkshopManuals.co.uk

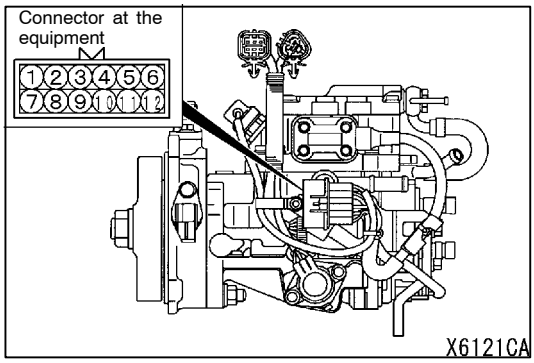


**Fuel temperature sensor check**

1. Disconnect the injection pump connector (12 pin).
2. Measure the resistance between terminal No.7 and terminal No.11.

   **Standard value: 1.4 - 2.6 Ω**

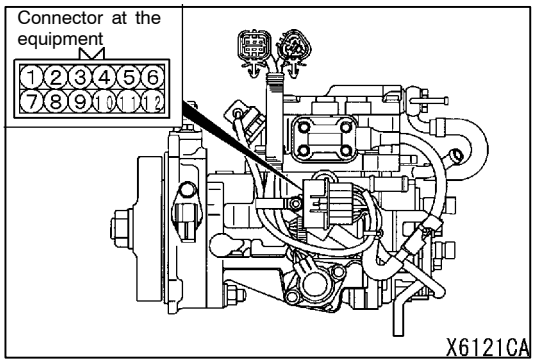


**Control sleeve position sensor check**

1. Disconnect the injection pump connector (12 pin).
2. Measure the resistance between the following terminals.

   **Standard value:**

| | |
|---|---|
| Terminal No.4 - Terminal No.12 | 11.2 - 12.4 Ω |
| Terminal No.4 - Terminal No.8 | 5.6 - 6.2 Ω |
| Terminal No.8 - Terminal No.12 | 5.6 - 6.2 Ω |

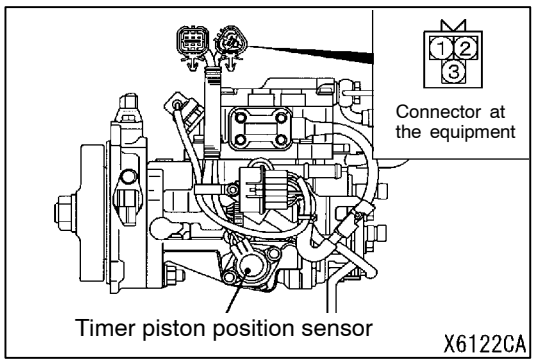


**Timer piston position sensor check**

1. Disconnect the timer piston position sensor connector.
2. Measure the resistance between the following terminals.

   **Standard value:**

| | |
|---|---|
| Terminal No.1 - Terminal No.2 | 160 - 168 Ω |
| Terminal No.1 - Terminal No.3 | 80 - 84 Ω |
| Terminal No.2 - Terminal No.3 | 80 - 84 Ω |

Purchased from www.WorkshopManuals.co.uk

www.WorkshopManuals.co.uk

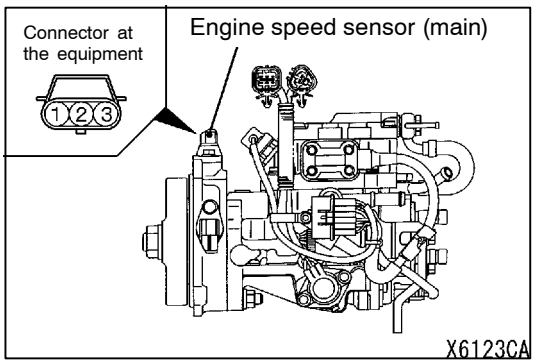


**Engine speed sensor (main) check**

1. Disconnect the engine speed sensor connector.
2. Measure the resistance between terminal No.2 and terminal No.3.

   **Standard value: 2.15 kΩ**

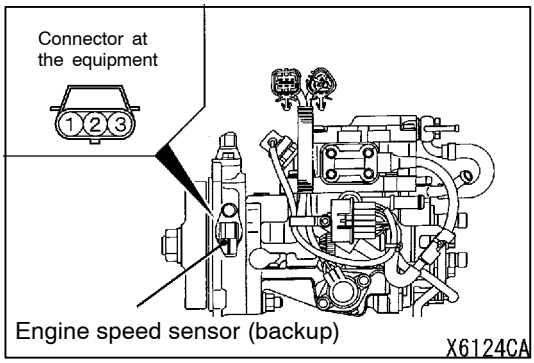


**Engine speed sensor (backup) check**

(1) Disconnect the engine speed sensor connector.
(2) Measure the resistance between terminal No.2 and terminal No.3.

   **Standard value: 2.15 kΩ**

## INTAKE AIR RESTRICTION EQUIPMENT CHECK

### MAIN/SUB THROTTLE SOLENOID VALVE OPERATION CHECK

1. Remove the main/sub throttle solenoid valve connector and vacuum hose.
2. Apply negative pressure to each nipple of the main/sub throttle solenoid valve with a hand vacuum pump to check air density for applying electrical charge to each solenoid valve terminal or not.

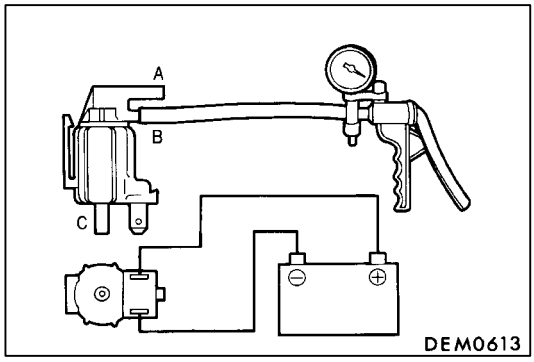


**Main/sub throttle solenoid valve**

| System voltage | Normal condition: |
|---|---|
| When current is supplied | Leak negative pressure (negative pressure maintained when nipple A is closed) |
| Cold | Leak negative pressure (negative pressure maintained when nipple C is closed) |

Purchased from www.WorkshopManuals.co.uk

www.WorkshopManuals.co.uk

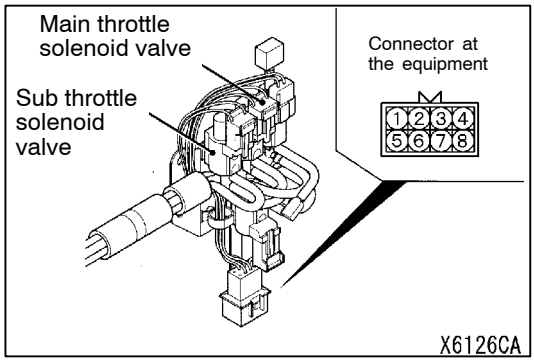


## MAIN/SUB THROTTLE SOLENOID VALVE RESISTANCE CHECK

1. Disconnect the main/sub throttle solenoid valve intermediate harness.
2. Main/sub throttle solenoid valve coil resistance.

**Standard value:**

| Throttle solenoid valve | Terminal to be measured | Resistance value Ω |
|---|---|---|
| Main | 2 - 6 | 36 - 44 |
| Sub | 1 - 5 | 36 - 44 |

## INJECTION NOZZLE CHECK AND ADJUSTMENT

Refer to the Engine Workshop Manual.

Purchased from www.WorkshopManuals.co.uk

www.WorkshopManuals.co.uk

# INJECTION NOZZLE

## REMOVAL AND INSTALLATION

**Pre-removal Operations**
- Engine Cover Removal
  (Refer to GROUP 11C - Camshaft.)
- Battery and Battery Tray Removal
- Fuel filter removal
  (Refer to GROUP 13D.)
- Skid Plate and Under Cover Removal

**Post-installation Operations**
- Skid Plate and Under Cover Installation
- Fuel Filter Installation
  (Refer to GROUP 13D.)
- Battery and Battery Tray Installation
- Fuel Line Bleeding (Refer to P.13C-45.)
- Engine Cover Installation
  (Refer to GROUP 11C - Camshaft.)

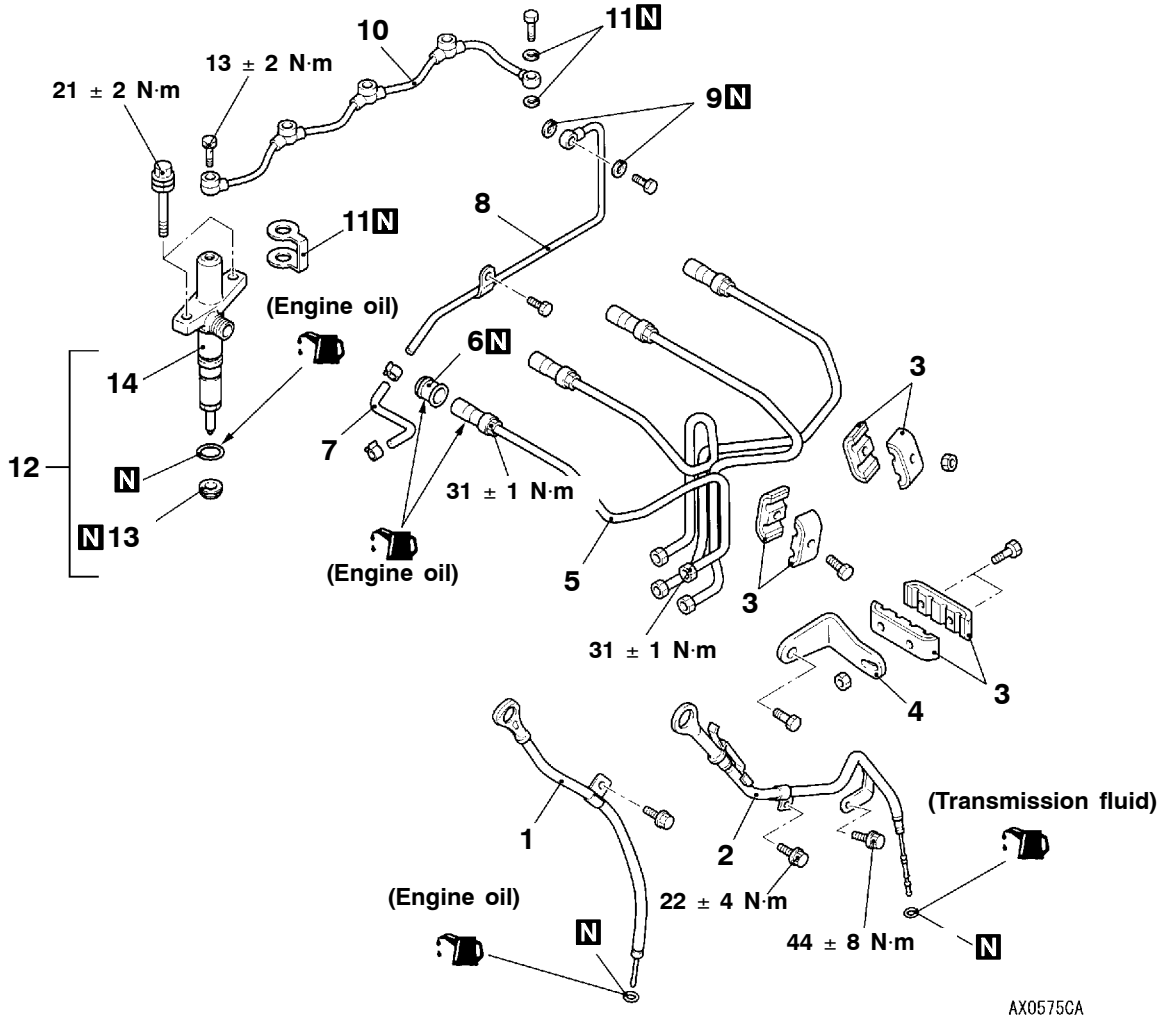


**Removal steps**

1. Engine oil level gauge and guide
2. A/T oil level gauge and guide
3. Clamp
4. Injection pipe stay
5. ◀A▶ ▶C◀ Injection pipe
6. ▶C◀ Injection pipe seal
7. ▶B◀ Fuel return hose
8. Fuel return pipe
9. Fuel return pipe gasket
   - Rocker cover
     (Refer to GROUP 11C - Camshaft.)
10. Fuel leak off pipe
11. Fuel leak off pipe gasket
12. ◀B▶ Injection nozzle assembly
13. ▶A◀ Nozzle gasket
14. ▶A◀ Injection nozzle

Purchased from www.WorkshopManuals.co.uk

www.WorkshopManuals.co.uk

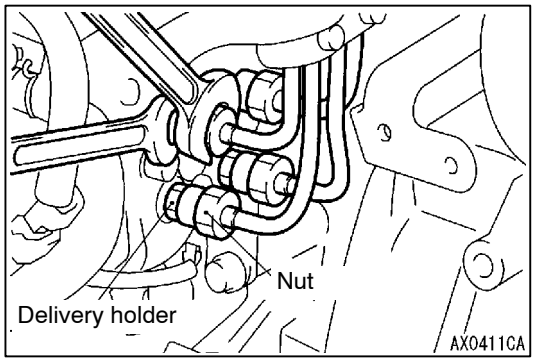


## REMOVAL SERVICE POINTS

### ◀A▶ INJECTION PIPE REMOVAL

Hold the injection pump side delivery holder with a open-end wrench, and loosen the nut.

### ◀B▶ INJECTION NOZZLE ASSEMBLY REMOVAL

**Caution**

1. **Since the injection nozzle assembly is required to re-install to the same cylinder, paste a label of the cylinder number when it is removed.**
2. **Plug the injection nozzle holes to prevent foreign materials from entering the cylinders.**

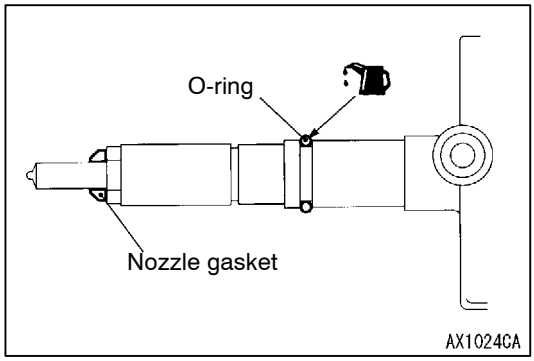


## INSTALLATION SERVICE POINTS

### ▶A◀ INJECTION NOZZLE/NOZZLE GASKET INSTALLATION

1. After cleaning the injection nozzle, apply a small amount of engine oil to a new O-ring, and install it, being careful not to damage it.
2. Install the nozzle gasket in the shown direction.

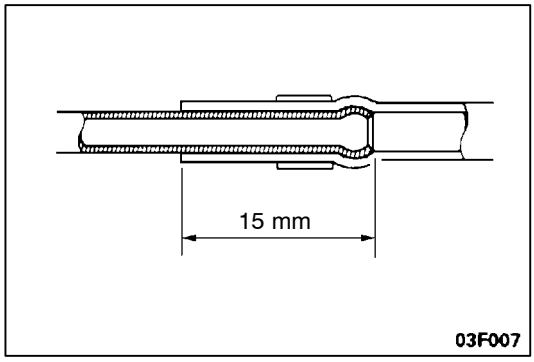


### ▶B◀ FUEL RETURN HOSE INSTALLATION

Insert the fuel return hose into the fuel pipe until the shown dimension is satisfied.

Purchased from www.WorkshopManuals.co.uk

www.WorkshopManuals.co.uk

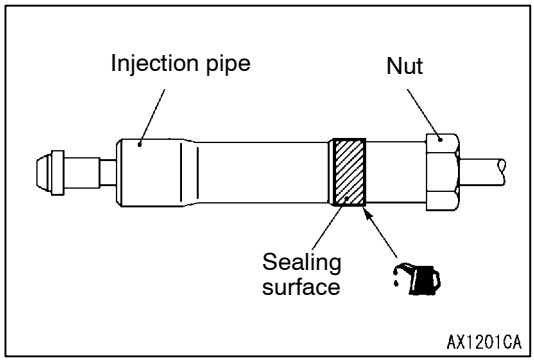


**▶C◀ INJECTION PIPE SEAL/INJECTION PIPE INSTALLATION**

1. Apply a small amount of engine oil to a new injection pipe seal, and install it, being careful not to damage it.
2. Apply a small amount of engine oil to the injection pipe sealing surface, and then connect the injection pipes.
3. Secure the delivery holder at the injection pump side with a spanner in the same way as the removal procedure, then install the injection pipe nut.
4. Tighten the injection pipe nut to the specified torque. **Tightening torque: 31 ± 1 N·m**

Purchased from www.WorkshopManuals.co.uk

www.WorkshopManuals.co.uk

## DISASSEMBLY AND REASSEMBLY

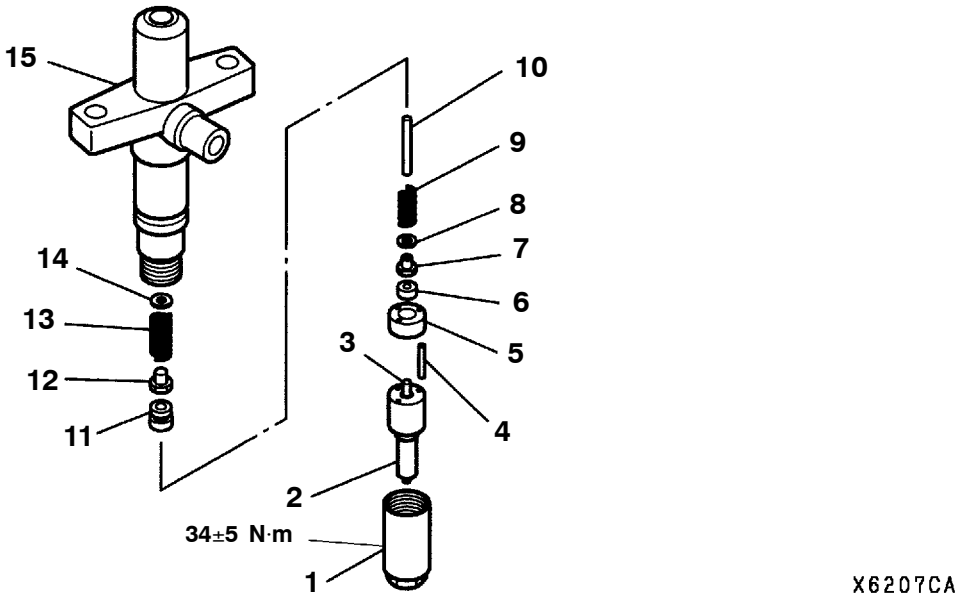


**Disassembly steps**

◀A▶ ▶A◀ 1. Retaining nut
2. Nozzle
3. Needle valve
4. Pin
5. Spacer
6. Lift piece
7. Spring seat
8. Shim
9. Second spring
10. Push rod
11. Collar
12. Spring seat
13. First spring
14. Shim
15. Nozzle holder

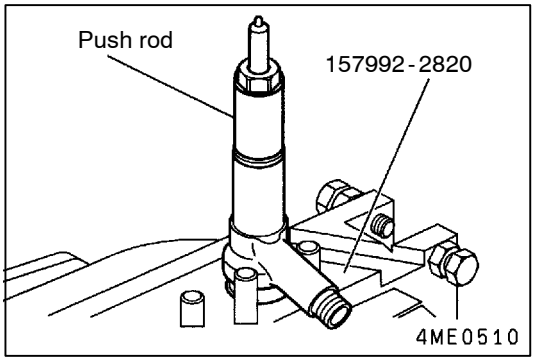


## DISASSEMBLY SERVICE POINT

### ◀A▶ RETAINING NUT REMOVAL

Use the special tool to remove the retaining nut.

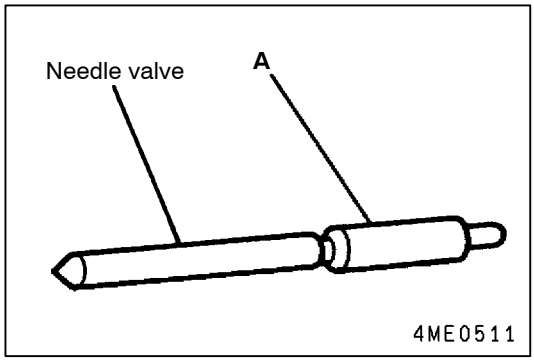


**Caution**

1. **Never touch the "A" part of the needle valve.**
2. **Always handle the needle valve and the nozzle as a set per cylinder.**

Purchased from www.WorkshopManuals.co.uk

www.WorkshopManuals.co.uk

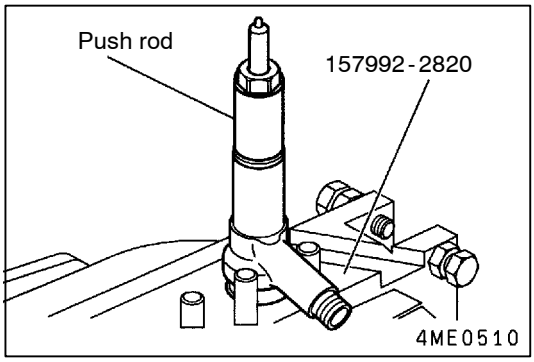


## REASSEMBLY SERVICE POINT

### ▶A◀ RETAINING NUT INSTALLATION

Use the special tool to install the retaining nut.

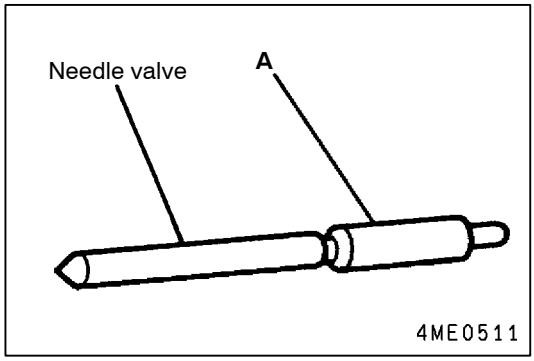


**Caution**

1. **Never touch the "A" part of the needle valve.**
2. **Always handle the needle valve and the nozzle as a set per cylinder.**

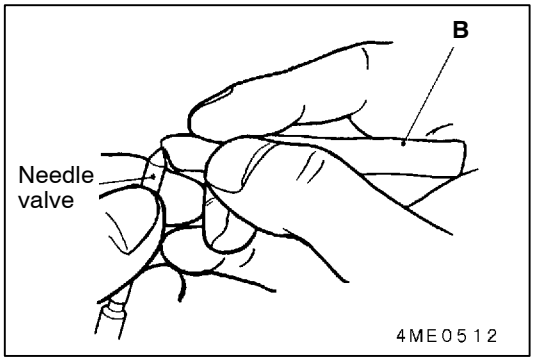


### NOZZLE AND NEEDLE VALVE CLEANING

Clean the needle valve and nozzle with gas oil (cleaning solvant).
Remove carbon deposits with a cleaning tool in the following manner:

1. Clean the needle valve by removing carbon deposits from its tip using cleaning bar **B** of the cleaning tool.

   **Never use a wire brush or hard steel for cleaning.**

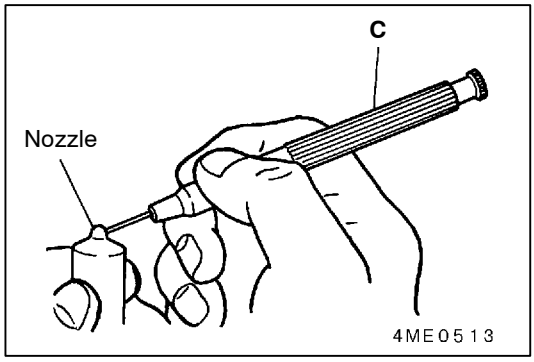


2. To clean the nozzle, remove carbon deposits from the orifices of the nozzle using needle cleaner **C** of the cleaning tool, by inserting it into the orifices and turning it.
   Needle cleaner diameter: $\phi$0.21 mm or less.

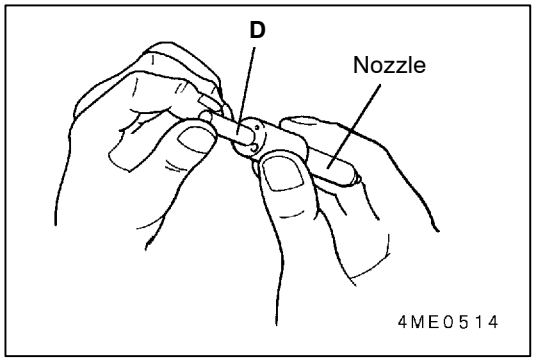


3. Clean the seat of the nozzle using cleaning needle **D** of the cleaning tool.
4. Use carbon remover to remove hard-to-remove, burnt-on carbon deposits.

Purchased from www.WorkshopManuals.co.uk

www.WorkshopManuals.co.uk

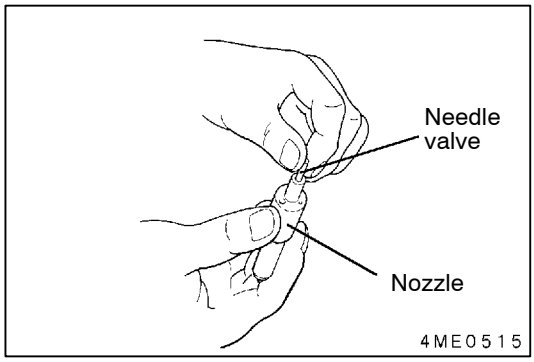


## INSPECTION

### NOZZLE AND NEEDLE VALVE

1. Immerse the needle valve and nozzle in gas oil (cleaning solvent) and clean them thoroughly.
2. Check and see if the needle valve drops by its own weight into the nozzle from the position where a third of its length is pulled out. (Repeat this several times rotating the needle valve.)
3. If the needle valve does not drop smoothly, repeat cleaning and repeat the test. If any fault is still found, replace both the needle valve and nozzle together as a set.

Purchased from www.WorkshopManuals.co.uk

www.WorkshopManuals.co.uk

# INJECTION PUMP

## REMOVAL AND INSTALLATION

**Pre-removal and Post-installation Operations**

- Removal and Installation Of Engine Cover (Refer to GROUP 11C - Camshaft.)
- Removal and Installation of Battery and Battery Tray
- Removal and Installation of Injection Pipe (Refer to P.13C-50.)
- Removal and Installation of Air Cleaner (Refer to GROUP 15.)
- Removal and Installation of Intercooler Hose (Refer to GROUP 15.)
- Removal and Installation of Glow Plug Relay and Solenoid Valve Assembly
- Removal and Installation of Vacuum Pump (Refer to GROUP 11C.)

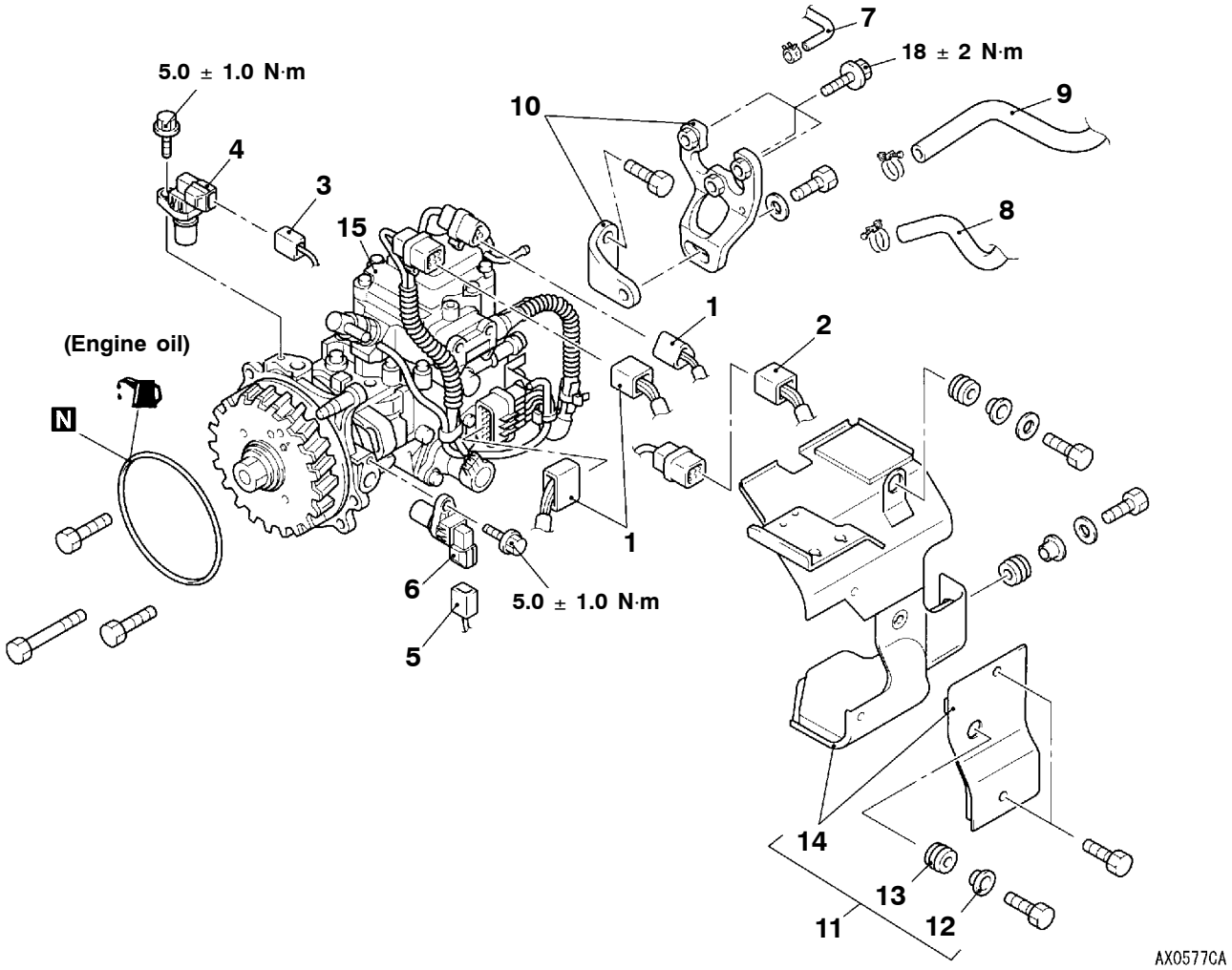


**Removal steps**

1. Injection pump connector
2. Engine speed sensor connector
3. Engine speed sensor 1 connector
4. Engine speed sensor 1
5. Engine speed sensor 2 connector
6. Engine speed sensor 2

▶C◀ 7. Fuel return hose
▶B◀ 8. Fuel return hose
▶B◀ 9. Fuel main hose
10. Injection pump stay
11. Injection pump cover assembly
12. Insulator collar
13. Insulator
14. Injection pump cover
◀A▶ ▶A◀ 15. Injection pump assembly

Purchased from www.WorkshopManuals.co.uk

www.WorkshopManuals.co.uk

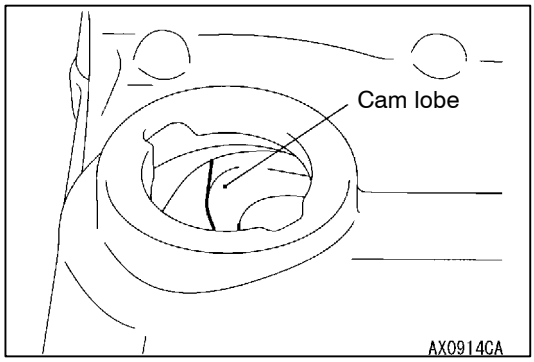


## REMOVAL SERVICE POINT

### ◀A▶ INJECTION PUMP ASSEMBLY REMOVAL

Make the timing mark of "0" position on the crankshaft pulley with that of the timing case and set No.1 cylinder to compression stroke TDC.

NOTE
Remove the oil filler cap. If the camshaft cam lobe is at the shown position, the No.1 cylinder is on the compression stroke TDC.

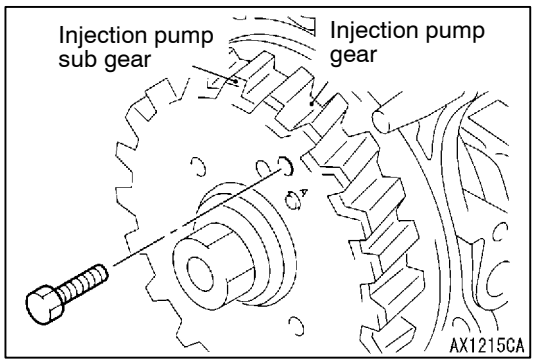


## INSTALLATION SERVICE POINTS

### ▶A◀ INJECTION PUMP ASSEMBLY INSTALLATION

1. Install the bolt (M6 × 16) to the show position in order to hold the injection pump gear and the injection pump sub gear in position.

   NOTE
   If the injection pump assembly or the injection pump gear assembly is replaced, the bolt has been assembled beforehand.

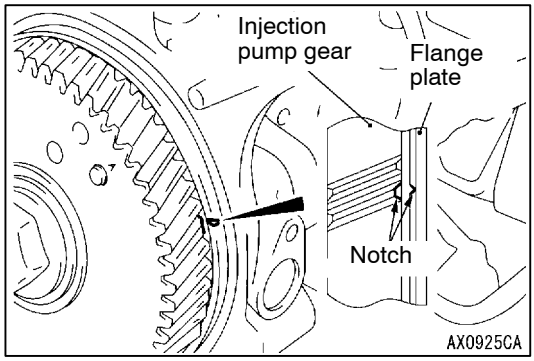


2. Make sure that No.1 cylinder is on the TDC of compression stroke.
3. Align the notch of the injection pump gear with the notch of the flange plate to install the injection pump assembly to the timing gear case.

   NOTE
   After installing the injection pump assembly, the characteristic of the gear makes the notch of the injection pump gear lag behind the notch of the flange plate by one tooth.

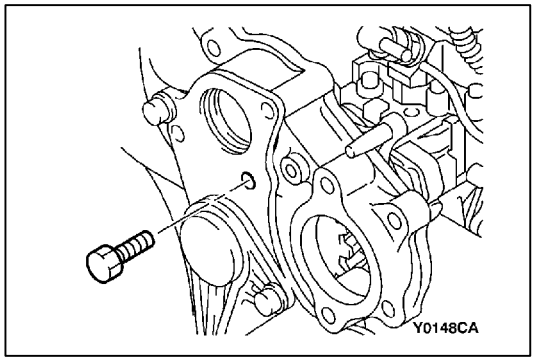


4. Remove the bolt, which has been assembled in Step 1.

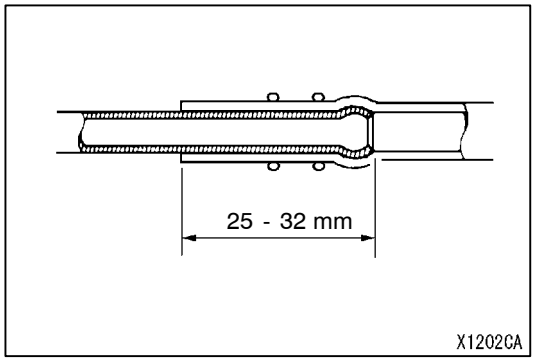


### ▶B◀ FUEL MAIN HOSE/FUEL RETURN HOSE INSTALLATION

When connecting the fuel main hose or return hose to the fuel pipe, insert it up to the stepped part.

Purchased from www.WorkshopManuals.co.uk

www.WorkshopManuals.co.uk

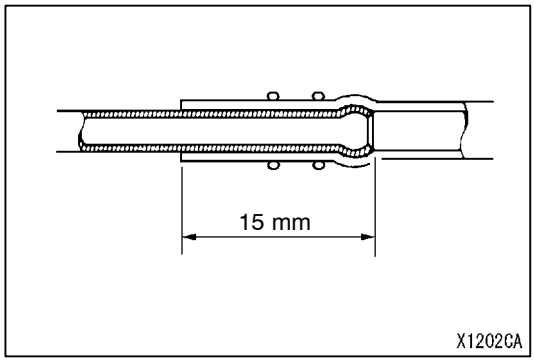


### ▶C◀ FUEL RETURN HOSE INSTALLATION

Insert the fuel return hose into the fuel pipe until the shown dimension is satisfied.

## DISASSEMBLY AND ASSEMBLY

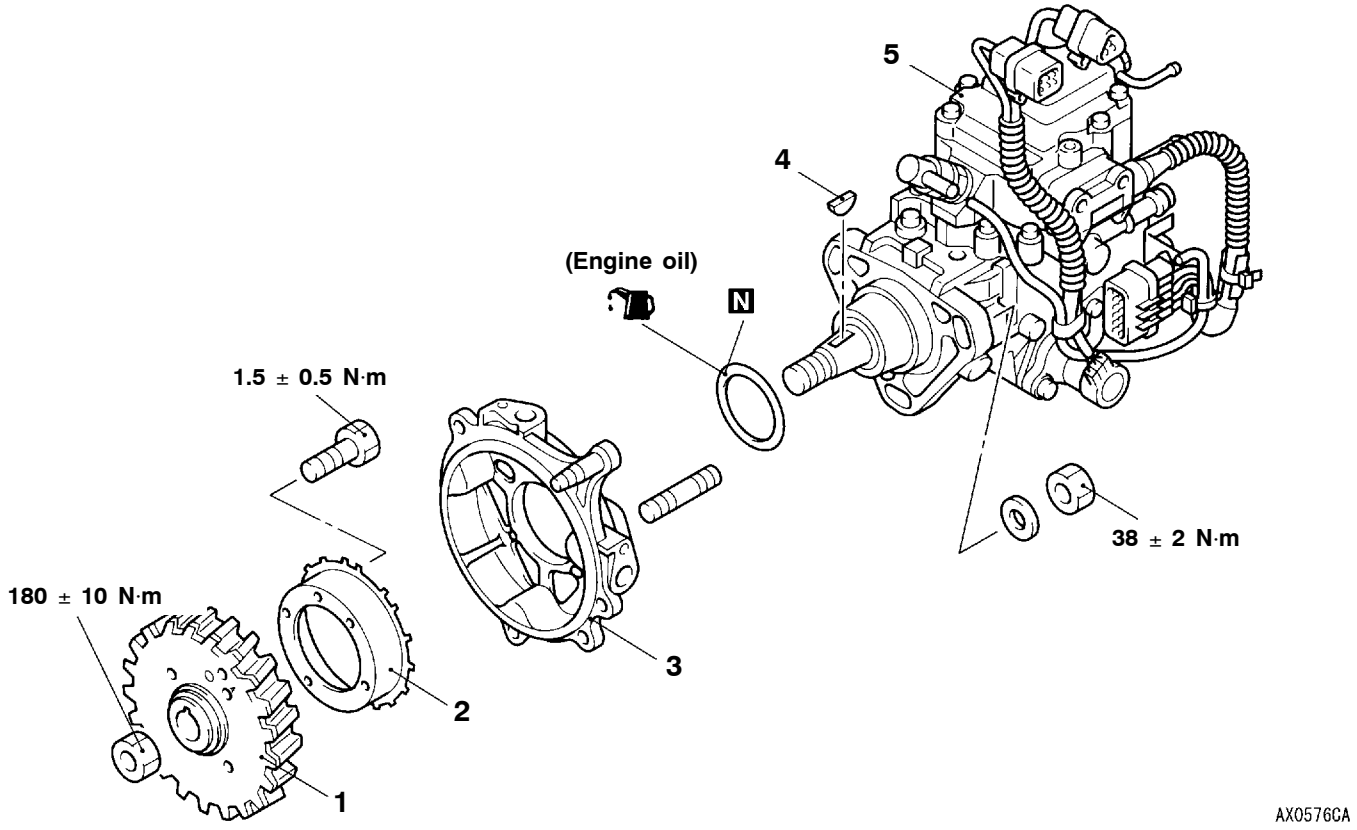


**Disassembly steps**

◀A▶
1. Injection pump gear assembly
2. Sensor plate
3. Flange plate
4. Key
5. Injection pump

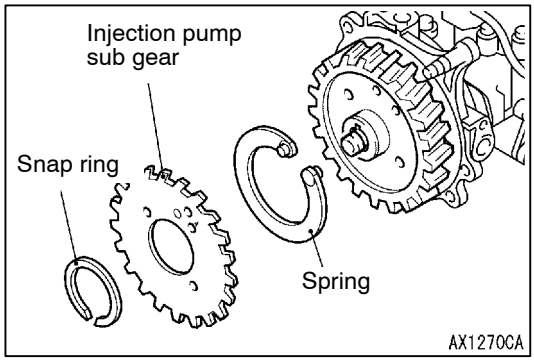


## DISASSEMBLY SERVICE POINT

### ◀A▶ INJECTION PUMP GEAR ASSEMBLY REMOVAL

Remove the injection pump gear according to the following procedure.

1. Remove the snap ring.
2. Remove the injection pump sub gear.
3. Remove the spring.

Purchased from www.WorkshopManuals.co.uk

www.WorkshopManuals.co.uk

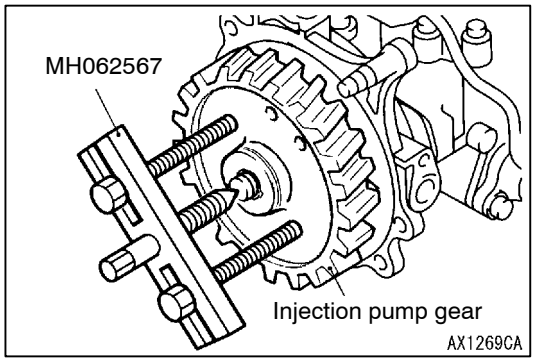


4. Remove the injection pump gear with special tools.

# ENGINE-ECU

## REMOVAL AND INSTALLATION

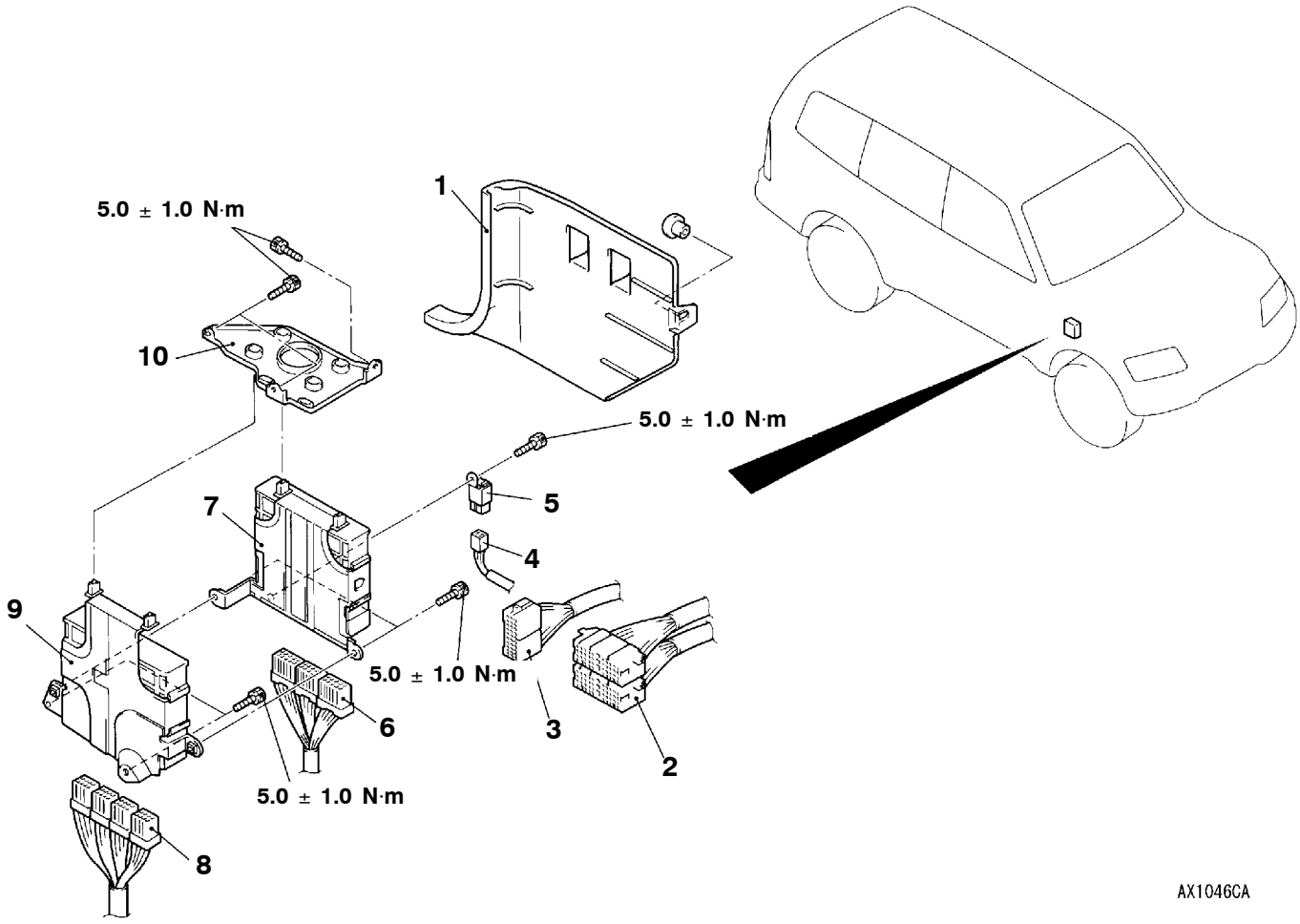


**Removal steps**

1. Cowl side trim (LH)
2. Joint of the instrument panel harness and front door harness (LH)
3. Joint of the instrument panel harness and floor harness (LH)
4. A/T control relay connector
5. A/T control relay
6. A/T-ECU connector
7. A/T-ECU
8. Engine-ECU connector
9. Engine-ECU
- Instrument panel (Refer to GROUP 52A.)
10. ECU bracket

Purchased from www.WorkshopManuals.co.uk

www.WorkshopManuals.co.uk

**NOTES**

Purchased from www.WorkshopManuals.co.uk

www.WorkshopManuals.co.uk

# Service Bulletins

**Click on the applicable bookmark to select the Service Bulletin.**

Purchased from www.WorkshopManuals.co.uk

www.WorkshopManuals.co.uk

# SERVICE BULLETIN

MITSUBISHI MOTORS

QUALITY INFORMATION ANALYSIS
OVERSEAS SERVICE DEPT. MITSUBISHI MOTORS CORPORATION

| SERVICE BULLETIN | No.: MSB-00E11-503 | | |
|---|---|---|---|
| | Date: 2000-11-30 | <Model> | <M/Y> |
| Subject: | CORRECTION TO INJECTION PUMP INSTALLATION SERVICE POINTS | (EC)PAJERO/ MONTERO (V60, 70) | 01-10 |
| Group: | ENGINE | Draft No.: 00SY052508 | |
| CORRECTION | INTERNATIONAL CAR ADMINISTRATION OFFICE | T.NITTA - PROJECT LEADER AFTER SALES SERVICE & CS PROMOTION | |

**1. Description:**

On the 4M41 engine equipped vehicles, incorrect description of the injection pump installation given under INSTALLATION SERVICE POINTS has been corrected.

**2. Applicable Manuals:**

| Manual | Pub. No. | Language | Page(s) |
|---|---|---|---|
| 2001 PAJERO Workshop Manual VOL1 | PWJE0001 (1/2) | (English) | 13C-56, 57 |
| 2001 MONTERO Workshop Manual VOL1 | PWJS0002 (1/2) | (Spanish) | |

Purchased from www.WorkshopManuals.co.uk

www.WorkshopManuals.co.uk

# INJECTION PUMP

## REMOVAL AND INSTALLATION

**Pre-removal and Post-installation Operation**

- Removal and installation Of Engine Cover (Refer to GROUP 11C - Camshaft.)
- Removal and Installation of Battery and Battery Tray
- Removal and Installation of Injection Pipe (Refer to P. 13C – 50.)
- Removal and Installation of Air Cleaner (Refer to GROUP 15.)
- Removal and Installation of Intercooler Hose (Refer to GROUP 15.)
- Removal and Installation of Glow Plug Relay and Solenoid Valve Assembly **<Incorrect>**
- Removal and Installation of Vacuum Pump (Refer to GROUP 11C.) **<Incorrect>**

11C – Vacuum Pump **<Correct>**

Power Steering Oil **<Correct>**

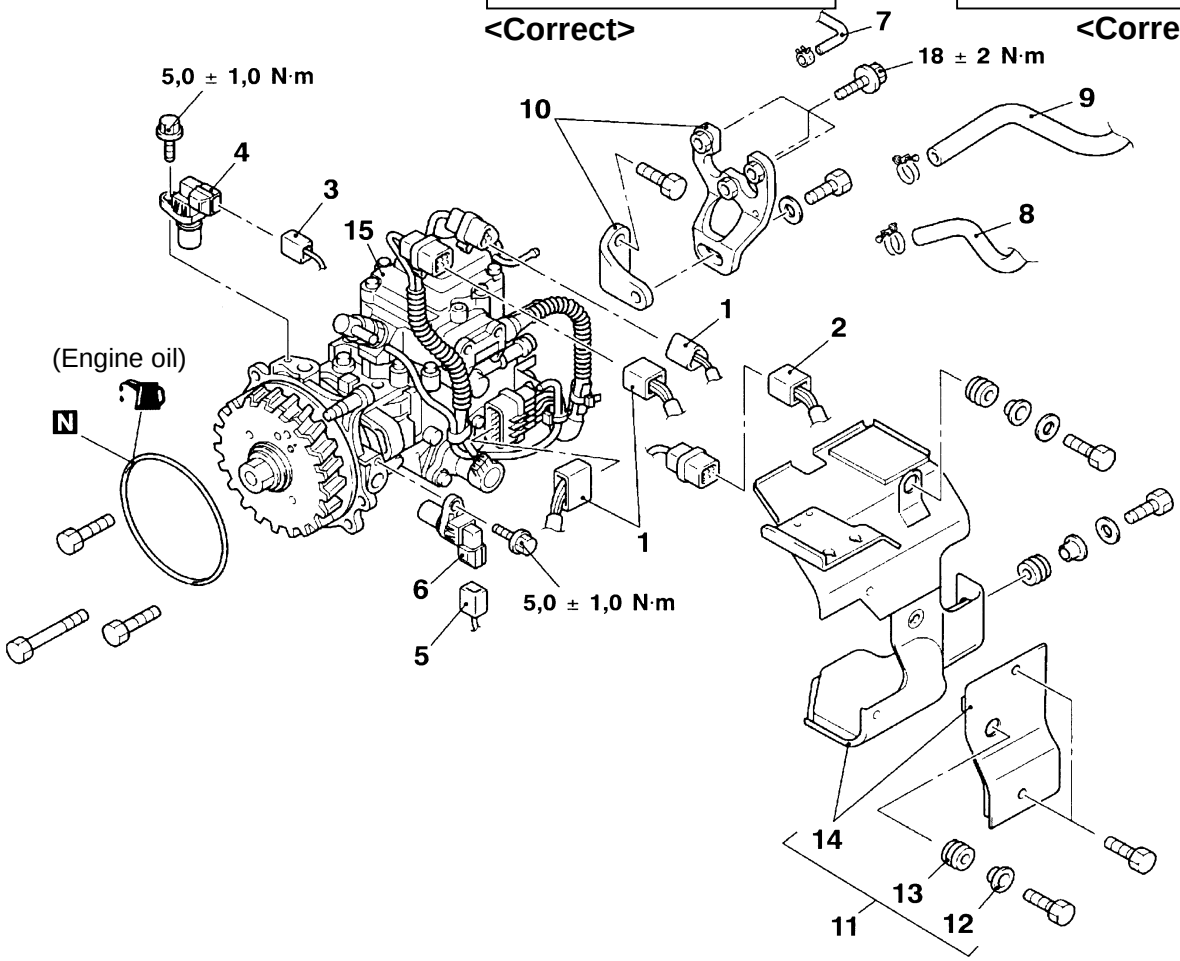


**Removal steps**

1. Injection pump connector
2. Engine speed sensor connector
3. Engine speed sensor 1 connector
4. Engine speed sensor 1
5. Engine speed sensor 2 connector
6. Engine speed sensor 2
7. ▶C◀ Fuel return hose
8. ▶B◀ Fuel return hose
9. ▶B◀ Fuel main hose
10. Injection pump stay
11. Injection pump cover assembly
12. Insulator collar
13. Insulator
14. Injection pump cover
15. ◀A▶▶A◀ Injection pump assembly


Purchased from www.WorkshopManuals.co.uk

www.WorkshopManuals.co.uk


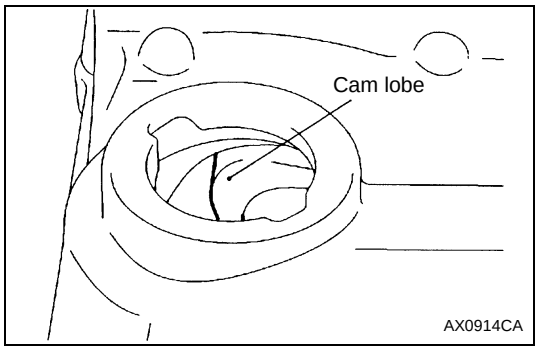


## REMOVAL SERVICE POINT

### ◀A▶INJECTION PUMP ASSEMBLY REMOVAL

Make the timing mark of “0” position on the crankshaft pulley with that of the timing case and set No.1 cylinder to compression stroke TDC.

NOTE

Remove the oil filler cap. If the camshaft cam lobe is at the shown position, the No.1 cylinder is on the compression stroke TDC.

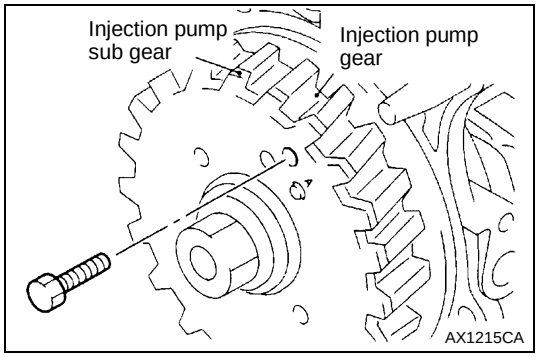


## INSTALLATION SERVICE POINTS

### ▶A◀INJECTION PUMP ASSEMBLY INSTALLATION

1. Install the bolt (M6 x 16) to the show position in order to hold the injection pump gear and the injection pump sub gear in position.

   NOTE
   If the injection assembly or the injection pump gear assembly is replaced, the bolt has been assembled beforehand.

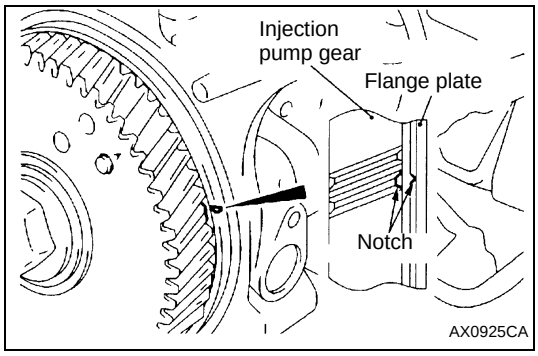


2. Make sure that No.1 cylinder is on the TDC of compression stroke.
3. Align the notch of the injection pump gear with the notch of the flange plate to install the injection pump assembly to the timing gear case.

   NOTE
   After installing the injection pump assembly, the characteristic of the of the gear makes the notch of the injection pump gear lag behind the notch of the flange plate by one tooth.

**<Incorrect>**

~~4. Remove the bolt, which has been assembled in Step 1.~~

**<Correct>**

4. Remove the drain plug.
5. Remove the bolt, which has been installed in Step 1, from the drain plug mounting hole.
6. Install the drain plug.

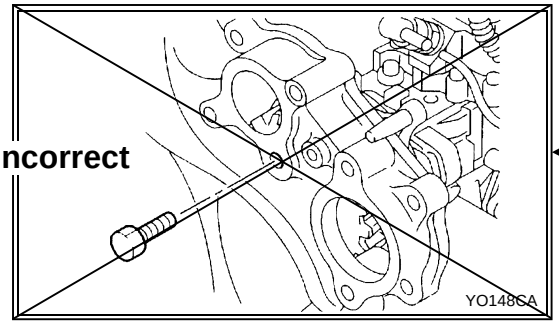


**<Incorrect**

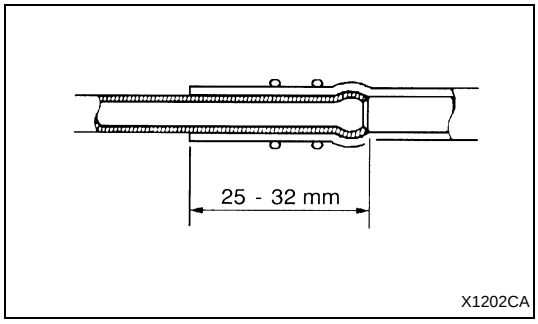


### ▶A◀FUEL MAIN HOSE/FUEL RETURN HOSE INSTALLATION

When connecting the fuel main hose or return hose to the fuel pipe, insert it up to the stepped part.

**<Correct>**

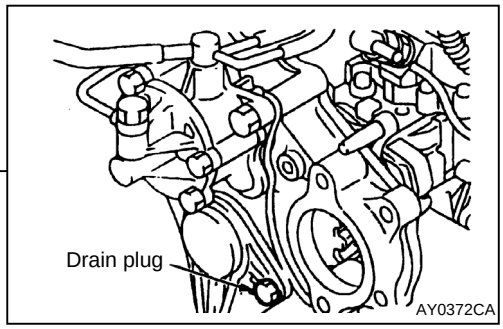


Purchased from www.WorkshopManuals.co.uk

www.WorkshopManuals.co.uk


# DIESEL FUEL <4M4>

## CONTENTS

**GENERAL** . . . . . 2
Outline of Changes . . . . . 2
**SERVICE SPECIFICATIONS** . . . . . 2
**TROUBLESHOOTING** . . . . . 2
**ON-VEHICLE SERVICE** . . . . . 12
Throttle Body Assembly Check . . . . . 12
**INJECTION PUMP** . . . . . 13

Purchased from www.WorkshopManuals.co.uk

www.WorkshopManuals.co.uk

# GENERAL

## OUTLINE OF CHANGES

Some service procedures have been established as the following changes have been made due to the compliance with the Emission Regulation Step III.

- The intake manifold cover and injection pump cover have been reshaped.
- The throttle body assembly has been changed.
- The EGR valve assembly has been changed.

# SERVICE SPECIFICATIONS

| Item | | Standard value |
|---|---|---|
| Throttle body assembly resistance Ω | at -10 - 50°C | 12 - 20 |
| | at 50 - 100°C | 12 - 23 |

# TROUBLESHOOTING

## FAIL-SAFE, BACKUP FUNCTIONS

When abnormalities in the major sensors are detected by diagnosis functions, pre-set control logic operates to maintain a safe driving condition for the vehicle.

| Diagnosis item | Control features in malfunction |
|---|---|
| Accelerator pedal position sensor | • Accelerator pedal released (idle switch ON)<br>Acceleration opening degree = 0 %<br>• Accelerator pedal applied (idle switch OFF)<br>Engine controlled at low speed<br>Acceleration opening degree = 40 % <M/T>, 28 % <A/T><br>• Void cruise control |
| Idle switch | • Void idling speed control<br>• Void cruise control |
| Engine speed sensor | • Engine controlled at low speed<br>• Void cruise control |
| Boost air temperature sensor | Maintain the intake air temperature at 50°C |
| Vehicle speed sensor | • Void idling speed control<br>• Void cruise control<br>• With accelerator pedal released (when idle switch is on)<br>Accelerator opening angle = 0 %<br>• With accelerator pedal depressed (when idle switch is off)<br>Accelerator opening angle = Fixed at 40 % (M/T), 28 % (A/T) |
| Engine coolant temperature sensor | Maintain the engine coolant temperature at 80°C (engine running), 0°C (engine stopped or just started) |
| Control sleeve position sensor | • With accelerator pedal released (when idle switch is on)<br>Engine speed = 800 r/min<br>• With accelerator pedal depressed (when idle switch is off)<br>Engine speed = 2,000 r/min<br>• Void cruise control |
| Timer piston position sensor | • Open control by means of engine speed<br>• Void cruise control |
| Barometric pressure sensor (ECU built-in) | Keep the barometric pressure at 101 kPa |

Purchased from www.WorkshopManuals.co.uk

www.WorkshopManuals.co.uk

| Diagnosis item | Control features in malfunction |
|---|---|
| Fuel temperature sensor | Maintain the fuel temperature at 90°C |
| Boost pressure sensor | ● Keep the boost pressure as barometric pressure (101 kPa)<br>● Void cruise control |
| Injection correction ROM | ● When backup data is normal: Correction calculation using backup data<br>● When backup data is corrupted: Fixed at correction value ±0 % |
| GE actuator | ● With accelerator pedal released (when idle switch is on) Engine speed = 800 r/min<br>● With accelerator pedal depressed (when idle switch is off) Engine speed = 2,000 r/min<br>● Void cruise control |
| Over boost | Void cruise control |
| Timing control valve | ● Open control by means of engine speed<br>● Void cruise control |
| Throttle body assembly | Void cruise control |
| EGR sensor | EGR control is prohibited |
| EGR motor | EGR control is prohibited |

## INSPECTION CHART FOR DIAGNOSIS CODES

| Code No. | Diagnosis item | Reference page |
|---|---|---|
| 11 | Accelerator pedal position sensor system | 13C-4 |
| 12 | Boost pressure sensor (boost sensor) system | 13C-4 |
| 13 | Barometric pressure sensor system | 13C-4 |
| 18 | Engine speed sensor (backup) system | 13C-4 |
| 21 | Engine speed sensor system | 13C-5 |
| 23 | Idle switch (accelerator pedal position sensor built-in) system | 13C-5 |
| 27 | Accelerator pedal position sensor (sub) system | 13C-5 |
| 41 | Throttle valve system | 13C-6 |
| 46 | Injection correction ROM system | 13C-6 |
| 48 | GE actuator (in the middle of control sleeve position sensor inoperative) system | 13C-7 |
| 51 | EGR valve system | 13C-8 |

Purchased from www.WorkshopManuals.co.uk

www.WorkshopManuals.co.uk

## INSPECTION PROCEDURE FOR DIAGNOSIS CODE

| Code No. 11 Accelerator pedal position sensor system | Probable cause |
|---|---|
| Range of Check<br>● Ignition switch: ON, accelerator pedal position sensor (sub) operative, except for during engine cranking<br>Set Conditions<br>● Output voltage of accelerator pedal position sensor (sub) for one second is 0.2 V or higher and lower than 2.5 V and output voltage of accelerator pedal position sensor (main) for one second is 4.5 V or higher, or lower than 0.2 V.<br>● Output voltage of accelerator pedal position sensor (main) for 1 second is lower than 0.2 V.<br>Range of Check<br>● Ignition switch: ON, except for during engine cranking<br>Set Conditions<br>● The output voltage of accelerator pedal position sensor (main and sub) for 0.2 second is 0.2 V or higher, or lower than 4.5 V and the difference in sensor output voltage between the main and sub for 0.2 second is 1 V or higher.<br>● Idle switch: ON, and sensor main output voltage is 1.875 V or higher for 1 second. | ● Accelerator pedal position sensor inoperative<br>● Accelerator pedal position sensor open circuit, short circuit, or connector contact inoperative<br>● Engine-ECU inoperative |

Inspection procedures are the same as before.

| Code No. 12 Boost pressure sensor (boost sensor) system | Probable cause |
|---|---|
| Range of Check<br>● Ignition switch: ON, except for during engine cranking<br>Set Conditions<br>● Sensor output voltage for one second is 4.5 V or higher (boost pressure is approximately 306.7 kPa)<br>or<br>● Sensor output voltage for one second is 0.2 V or lower (boost pressure is approximately 13 kPa or lower)<br>Range of Check<br>● Engine speed is 1600 r/min or higher and the acceleration opening degree is 75% <M/T> or 50% <A/T> or more<br>Set Conditions<br>● Boost pressure is lower than the barometric pressure + 13 kPa for two seconds. | ● Boost pressure sensor inoperative<br>● Boost pressure sensor open circuit, short circuit, or connector contact inoperative<br>● Boost pressure sensor hose disconnected<br>● Engine-ECU inoperative |

Inspection procedures are the same as before.

| Code No. 13 Boost pressure sensor system | Probable cause |
|---|---|
| Range of Check<br>● Ignition switch: ON, except for during engine cranking<br>Set Conditions<br>● The sensor output voltage is 4.5 V or higher for 3 seconds<br>or<br>● The sensor output voltage is 1.5 V or lower for 3 seconds | ● Engine-ECU inoperative |

Inspection procedures are the same as before.

| Code No. 18 Engine speed sensor (backup) system | Probable cause |
|---|---|
| Range of Check<br>● Ignition switch: ON<br>● Except for during engine stall and cranking<br>Set Conditions<br>● The difference in the engine speed sensor output for 4 seconds: 325 r/min or more | ● Engine speed sensor inoperative<br>● Engine speed sensor open circuit, short circuit, or connector contact inoperative<br>● Engine-ECU inoperative |

Inspection procedures are the same as before.

Purchased from www.WorkshopManuals.co.uk

www.WorkshopManuals.co.uk

| Code No. 21 Engine speed sensor system | Probable cause |
|---|---|
| Range of Check<br>● During engine cranking<br>Set Conditions<br>● No change in the engine speed sensor output voltage for 1 seconds (on pulse signal has been input)<br>Range of Check<br>● Ignition switch: ON<br>● Except for during engine stall and cranking<br>● Engine speed is more than or equal to 600 r/min<br>Set Conditions<br>● No change in the engine speed sensor output 0.3 seconds | ● Engine speed sensor inoperative<br>● Engine speed sensor open circuit, short circuit, or connector contact inoperative<br>● Engine-ECU inoperative |

Inspection procedures are the same as before.

| Code No. 23 Idle switch (accelerator pedal position sensor built-in) system | Probable cause |
|---|---|
| Range of Check<br>Ignition switch: ON, accelerator pedal position sensor (main, sub) operative, except for during engine cranking<br>Set Conditions<br>● Idle switch (built-in): ON, accelerator pedal position sensor (main, sub) output voltage for 0.8 second 1.875 V or higher<br>● Idle switch (built-in): OFF, accelerator pedal position sensor (main, sub) opening degrees less than 1 % | ● Accelerator pedal position sensor inoperative<br>● Accelerator pedal position sensor open circuit, short circuit, or connector contact inoperative<br>● Idle switch “ON” inoperative<br>● Idle switch signal line short circuit<br>● Engine-ECU inoperative |

Inspection procedures are the same as before.

| Code No. 27 Accelerator pedal position sensor (sub) system | Probable cause |
|---|---|
| Range of Check<br>● Ignition switch: ON, accelerator pedal position sensor (main) operative, except for during engine cranking<br>Set Conditions<br>● Output voltage of accelerator pedal position sensor (main) for 1 second is 0.2 V or higher and lower than 2.5 V. Output voltage of accelerator pedal position sensor (sub) for 1 second is 4.5 V or higher.<br>● Output voltage of accelerator pedal position sensor (sub) for 1 second is lower than 0.2 V.<br>Range of Check<br>● Ignition switch: ON, except for during engine cranking<br>Set Conditions<br>● Output voltage of accelerator pedal position sensor (main and sub) is 0.2 V or higher or lower than 4.5 V.<br>● The difference in the output sensor voltage between the main and the sub sensor for 0.2 seconds is 1.0 V or more. | ● Accelerator pedal position sensor inoperative<br>● Accelerator pedal position sensor open circuit, short circuit, or connector contact inoperative<br>● Engine-ECU inoperative |

Inspection procedures are the same as before.

Purchased from www.WorkshopManuals.co.uk

www.WorkshopManuals.co.uk

| Code No. 41 Throttle valve system | Probable cause |
|---|---|
| Range of Check<br>● Engine speed is 1,600 r/min and accelerator opening angle is 50 % or more<br>Set Conditions<br>● Boost pressure < barometric pressure + 33 kPa for 12 seconds | ● Malfunction of throttle valve<br>● Open circuit or short-circuit in throttle valve circuit or poor connector connection<br>● Malfunction of engine-ECU |

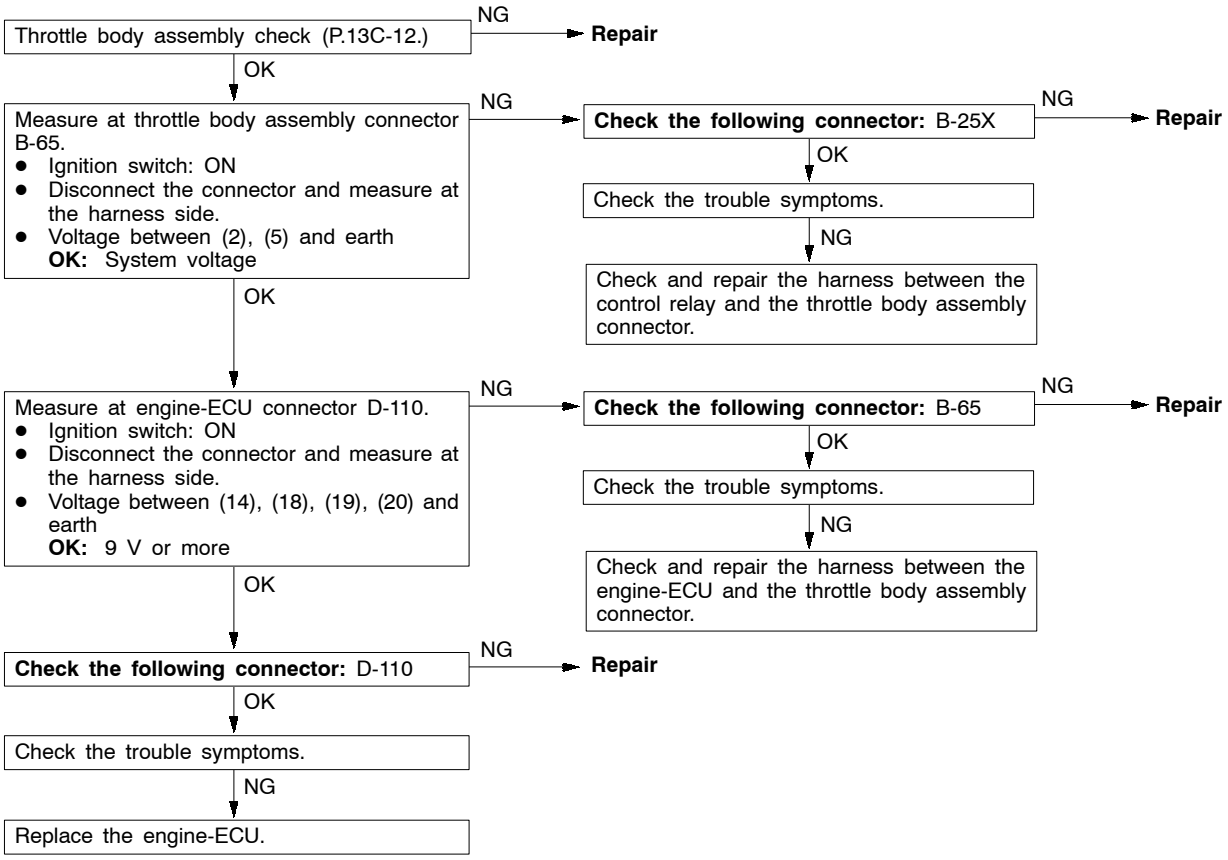


| Code No. 46 Injection correction ROM system | Probable cause |
|---|---|
| Range of Check<br>● Ignition switch: ON<br>Set Conditions<br>● When communication fails | ● Injection correction ROM inoperative<br>● Engine-ECU inoperative<br>● Short circuit, open circuit, or connector contact inoperative |

Inspection procedures are the same as before.

Purchased from www.WorkshopManuals.co.uk

www.WorkshopManuals.co.uk

| Code No. 48 GE actuator (in the middle of control sleeve position sensor inoperative) system | Probable cause |
|---|---|
| Range of Check<br>● Ignition switch: ON<br>Set Conditions<br>● Target value minus actual value for 0.5 second is 1 V or more. | ● Control sleeve position sensor inoperative<br>● GE actuator inoperative<br>● Control sleeve position sensor open circuit, short circuit, or connector contact inoperative<br>● Engine-ECU inoperative |

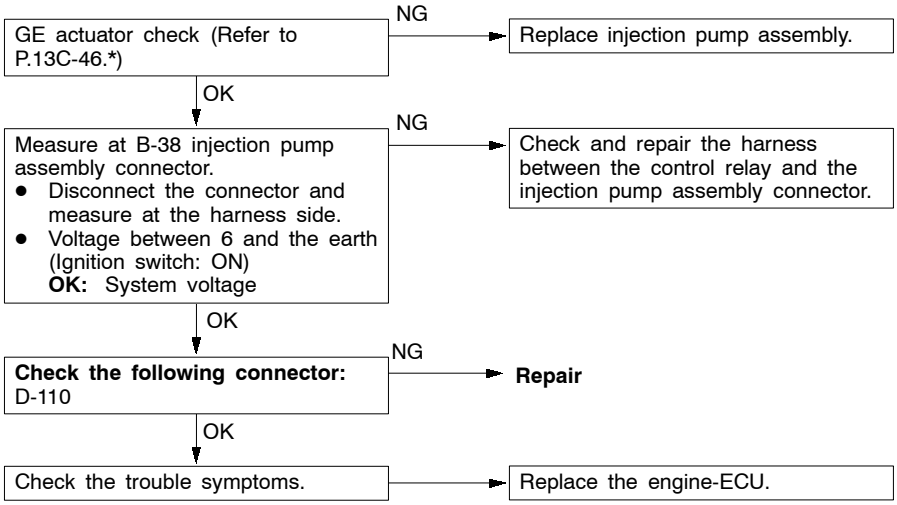


NOTE:
*: Refer to the 2001 PAJERO Workshop Manual (Pub. No. PWJE0001).

Purchased from www.WorkshopManuals.co.uk

www.WorkshopManuals.co.uk

| Code No. 51 EGR valve assembly system | Probable cause |
|---|---|
| Range of Check<br>● Ignition switch: ON<br>Set Conditions<br>● EGR sensor output voltage is continuously 0.5 V or less, or 4.5 V or more for 1 second or more<br>● Difference between EGR sensor output voltage target value and output is continuously 0.5 V or more for 3 seconds or more | ● Malfunction of EGR valve assembly<br>● Open circuit or short-circuit in EGR valve assembly circuit or poor connector connection<br>● Malfunction of engine-ECU |

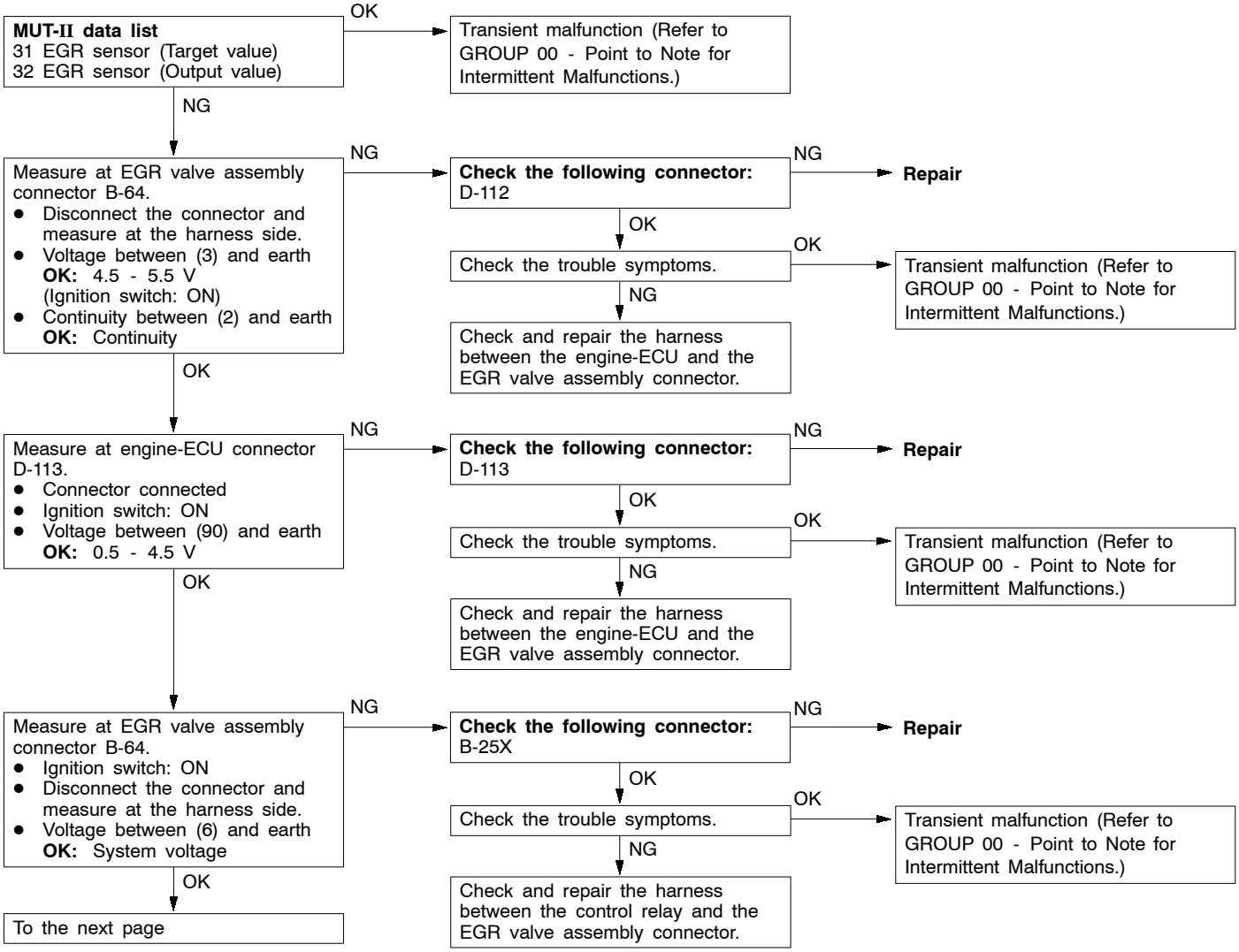


Purchased from www.WorkshopManuals.co.uk

www.WorkshopManuals.co.uk

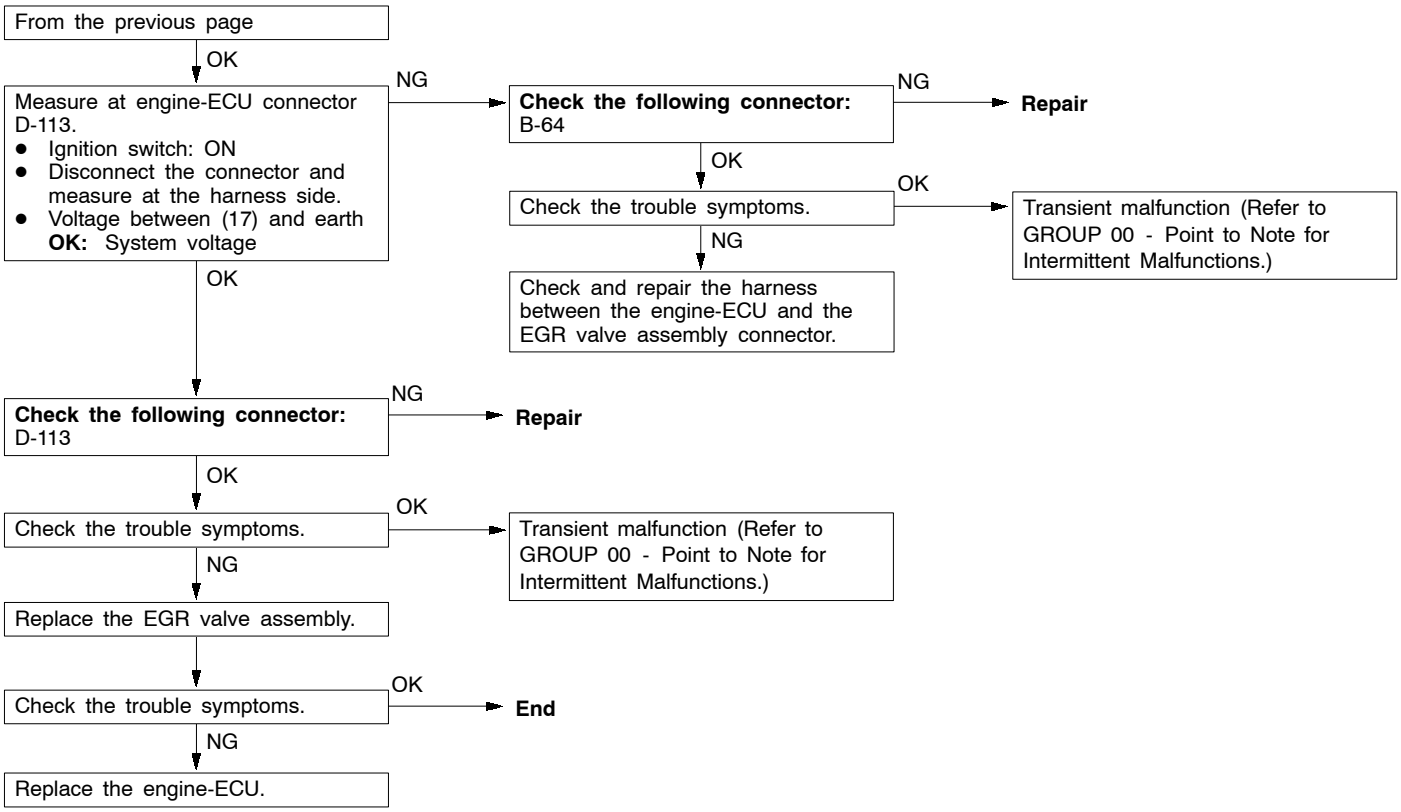


## INSPECTION PROCEDURES FOR TROUBLE SYMPTOMS

### Inspection procedure 20

| Excessive engine vibration when engine stopped | Probable cause |
|---|---|
| The cause is probably a malfunction of the throttle body assembly. | ● Malfunction of throttle body assembly (does not close)<br>● Open circuit or short-circuit in throttle body assembly circuit or poor connector connection |

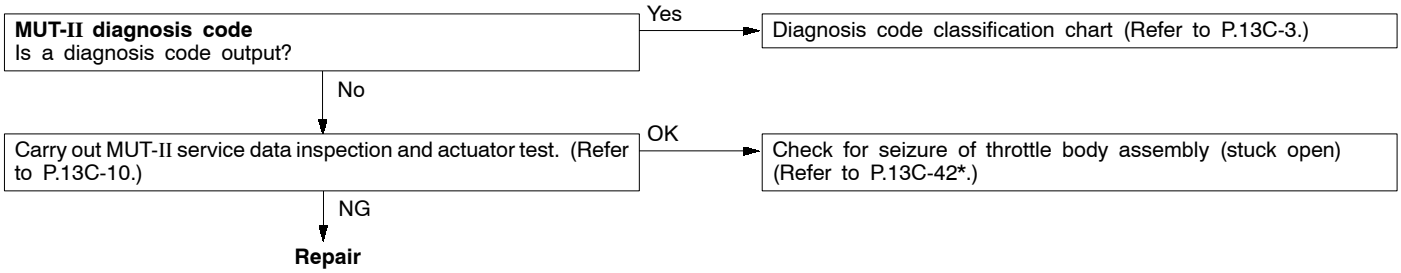


NOTE:
*: Refer to the 2001 PAJERO Workshop Manual (Pub. No. PWJE0001).

Purchased from www.WorkshopManuals.co.uk

www.WorkshopManuals.co.uk

## DATA LIST REFERENCE TABLE

| Item No. | Check item | Inspection conditions | Value to be determined normal | Code No. or inspection procedure No. | Reference page |
|---|---|---|---|---|---|
| 31 | EGR sensor (Target value) | Engine: Racing | Changes between 0.5 V and 4.5 V | Code No. 51 | 13C-8 |
| 32 | EGR sensor (Output value) | Engine: Racing | Approaches EGR sensor (target value). | Code No. 51 | 13C-8 |
| 36 | Throttle body assembly (Target value) | Engine: Idling | 30 deg | Code No. 41 | 13C-6 |

## ACTUATOR TEST TABLE

| Item No. | Check item | Drive contents | Inspection conditions | Value to be determined as normal | Code No. or inspection procedure No. | Reference page |
|---|---|---|---|---|---|---|
| 07 | Throttle body assembly | Throttle valve: Fully closed | • Ignition switch: ON<br>• Vehicle speed: 0 km/h<br>• Engine speed: 1,000 r/min or lower | Operating sound can be heard. | Code No. 41 | 13C-6 |
| 08 | | Throttle valve: Kept at half-open | | | | |
| 09 | | Throttle valve: Fully open | | | | |
| 28 | EGR valve assembly | EGR valve: Open | • Ignition switch: ON<br>• Vehicle speed: 0 km/h | Operating sound can be heard. | Code No. 51 | 13C-8 |
| 29 | | EGR valve: Closed | | | | |

Purchased from www.WorkshopManuals.co.uk

www.WorkshopManuals.co.uk

## ENGINE-ECU CHECK

### TERMINAL VOLTAGE TABLE

| Terminal No. | Check item | Inspection conditions (engine status) | | Normal condition |
|---|---|---|---|---|
| 14 | Throttle body assembly (1) | Ignition switch: ON (Engine stops) | | 9 V or more |
| 17 | EGR motor | Ignition switch: ON (Engine stops) | | System voltage |
| 18 | Throttle body assembly (2) | Ignition switch: ON (Engine stops) | | 9 V or more |
| 19 | Throttle body assembly (3) | Ignition switch: ON (Engine stops) | | 9 V or more |
| 20 | Throttle body assembly (4) | Ignition switch: ON (Engine stops) | | 9 V or more |
| 33 | A/C load signal | Engine: Idle<br>A/C switch: ON | During weak cooling or heating | System voltage |
| | | | During normal cooling | 0 - 1 V |
| | | | During strong cooling | Changes repeatedly between 0 V and 12 V |
| 37 | Clutch switch <M/T> | Clutch pedal depressed | | 0 - 1 V |
| | Inhibitor switch <A/T> | Ignition switch: ON (Engine stops) | Move selector lever to N or P | 0 - 1 V |
| | | | Move selector lever to D, 2, L or R | System voltage |
| 38 | Control relay (no immobilizer) | Ignition switch: ON | | 0 - 1 V |
| | | Ignition switch: ON → OFF (after approx. 8 seconds) | | System voltage |
| 41 | Select switch <M/T> | Ignition switch: ON (Engine stops) | Move shift lever to 4st or R | System voltage |
| 42 | 1st - 2nd switch <M/T> | Ignition switch: ON (Engine stops) | Move shift lever to 1st or 2nd | System voltage |
| 43 | 3rd - 4th switch <M/T> | Ignition switch: ON (Engine stops) | Move shift lever to 3rd or 4th | System voltage |
| 44 | 5th - R switch <M/T> | Ignition switch: ON (Engine stops) | Move shift lever to 5th | 0 - 1 V |
| | | | Move shift lever to R | System voltage |
| 58 | Tachometer | During idling | | Changes repeatedly between 0 V and 12 V |
| 90 | EGR valve sensor | During racing | | Changes between 0.5 V and 4.5 V |

Purchased from www.WorkshopManuals.co.uk

www.WorkshopManuals.co.uk

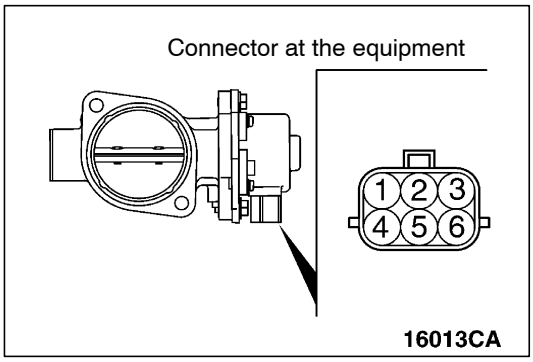


# ON-VEHICLE SERVICE

## THROTTLE BODY ASSEMBLY CHECK

1. Remove the air intake hose from the throttle body.
2. Move the throttle valve by hand and check that it moves smoothly.

   NOTE
   At this time, check that the throttle valve is not damaged or bent. If there is any problem, replace the throttle body assembly.

3. Disconnect the throttle body assembly connector.
4. Measure resistance between the throttle body assembly connector terminals.

   **Standard value:**

| Terminals to be measured | Resistance value (Ω) |
|---|---|
| 1 - 2 | 12 - 20 (at -10 - 50°C)<br>15 - 23 (at 50 - 100°C) |
| 2 - 3 | |
| 4 - 5 | |
| 5 - 6 | |

5. Connect the throttle body assembly connector.
6. Attach the air intake hose.

Purchased from www.WorkshopManuals.co.uk

www.WorkshopManuals.co.uk

# INJECTION PUMP

## REMOVAL AND INSTALLATION

**Pre-removal and Post-installation Operations**
- Engine Cover Removal and Installation.
- Battery and Battery Tray Removal and Installation.
- Injection Pipe Removal and Installation.
- Air duct (A) Removal and Installation.
- Intercooler Hose Removal and Installation.
- Glow Plug Relay and Bracket Assembly Removal and Installation.
- Power Steering Oil Pump Removal and Installation.
- Fuel Filter Removal and Installation.

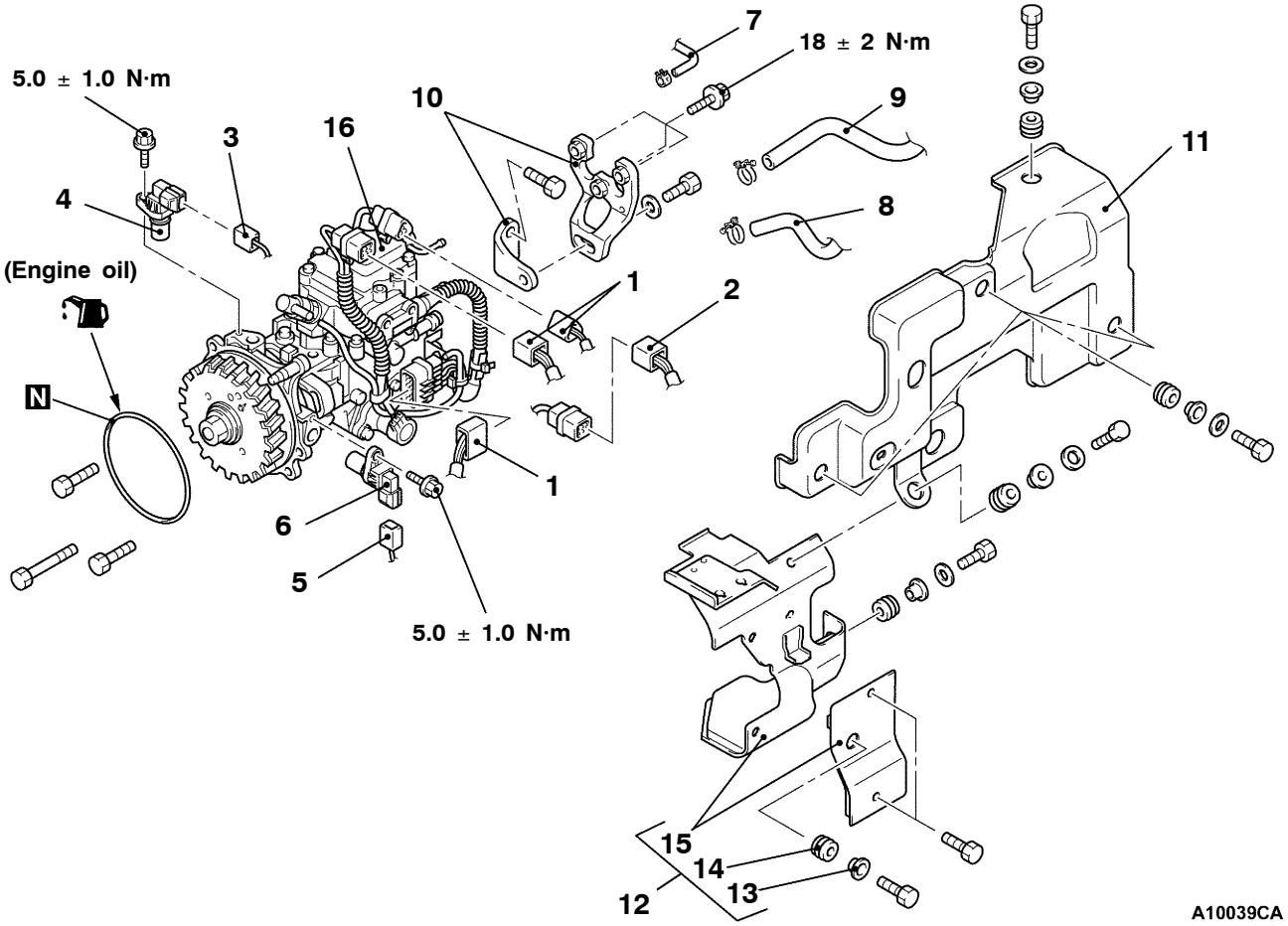


**Removal steps**

1. Injection pump connector
2. Engine speed sensor connector
3. Engine speed sensor 1 connector
4. Engine speed sensor 1
5. Engine speed sensor 2 connector
6. Engine speed sensor 2
7. ▶C◀ Fuel return hose
8. ▶B◀ Fuel return hose
9. ▶B◀ Fuel main hose
10. Injection pump stay
11. Intake manifold cover
12. Injection pump cover assembly
13. Insulator collar
14. Insulator
15. Injection pump cover
16. ◀A▶ ▶A◀ Injection pump assembly

Purchased from www.WorkshopManuals.co.uk

www.WorkshopManuals.co.uk

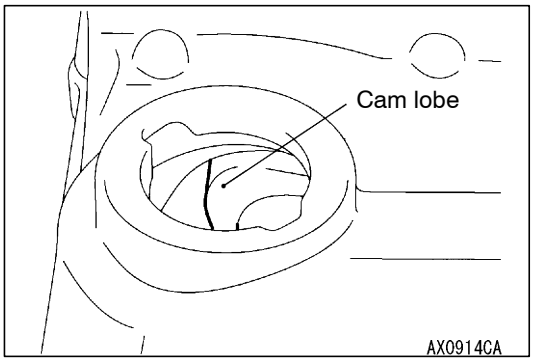


## REMOVAL SERVICE POINT

### ◀A▶ INJECTION PUMP ASSEMBLY REMOVAL

Make the timing mark of “0” position on the crankshaft pulley with that of the timing case and set No. 1 cylinder to compression stroke TDC.

NOTE
Remove the oil filler cap. If the camshaft cam lobe is at the shown position, the No. 1 cylinder is on the compression stroke TDC.

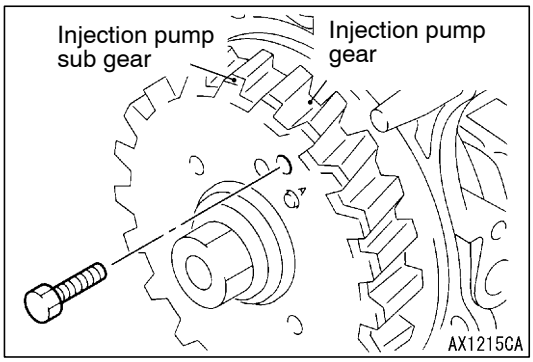


## INSTALLATION SERVICE POINTS

### ▶A◀ INJECTION PUMP ASSEMBLY INSTALLATION

1. Install the bolt (M6 × 16) to the show position in order to hold the injection pump gear and the injection pump sub gear in position.

   NOTE
   If the injection pump assembly or the injection pump gear assembly is replaced, the bolt has been assembled beforehand.

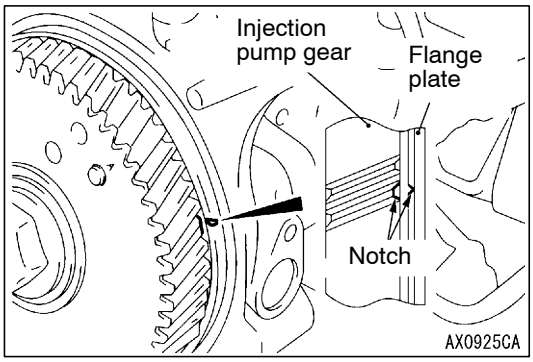


2. Make sure that No. 1 cylinder is on the TDC of compression stroke.
3. Align the notch of the injection pump gear with the notch of the flange plate to install the injection pump assembly to the timing gear case.

   NOTE
   After installing the injection pump assembly, the characteristic of the gear makes the notch of the injection pump gear lag behind the notch of the flange plate by one tooth.

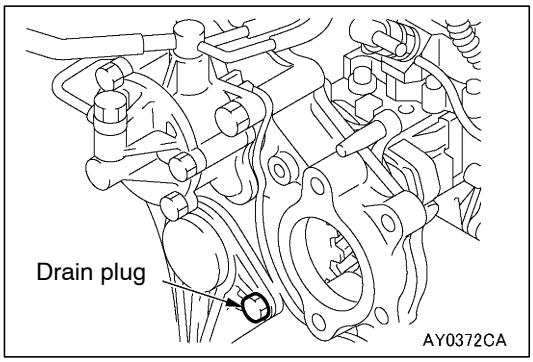


4. Remove the drain plug.
5. Remove the bolt, which is installed in step 1, from the drain plug hole.
6. Install the drain plug.

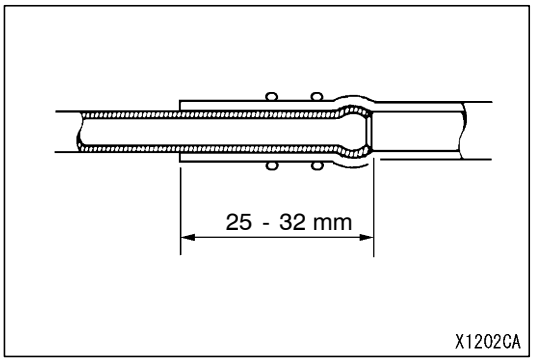


### ▶B◀ FUEL MAIN HOSE/FUEL RETURN HOSE INSTALLATION

When connecting the fuel main hose or return hose to the fuel pipe, insert it up to the stepped part.

Purchased from www.WorkshopManuals.co.uk

www.WorkshopManuals.co.uk

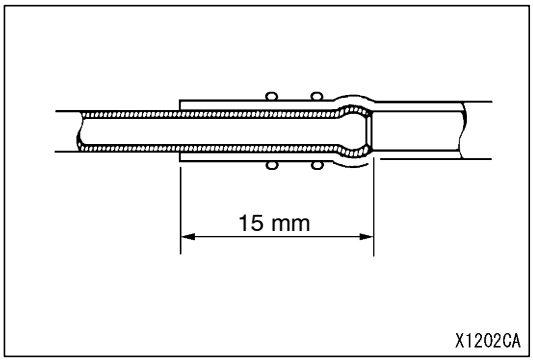


**▶C◀ FUEL RETURN HOSE INSTALLATION**

Insert the fuel return hose into the fuel pipe until the shown dimension is satisfied.

Purchased from www.WorkshopManuals.co.uk

www.WorkshopManuals.co.uk

**NOTES**

Purchased from www.WorkshopManuals.co.uk

www.WorkshopManuals.co.uk

# FUEL SUPPLY

**Click on the applicable bookmark to selected the required model year.**

Purchased from www.WorkshopManuals.co.uk

www.WorkshopManuals.co.uk


# FUEL SUPPLY

## CONTENTS

GENERAL INFORMATION . . . . . 2
FUEL TANK <6G7> . . . . . 2
FUEL TANK <4D5, 4M4> . . . . . 8
FUEL FILTER . . . . . 13

Purchased from www.WorkshopManuals.co.uk

www.WorkshopManuals.co.uk

# GENERAL INFORMATION

The fuel tank is located under the floor below the rear seats.
The fuel pump module contains a fuel pump (low-pressure), fuel filter and fuel pressure regulator (low-pressure).
The valve assembly contains a cut-off valve, which prevents fuel to flow out, and a two-way valve, which regulates the fuel pressure inside the fuel tank.

The high-pressure fuel hose is of an one-touch joint type.

# FUEL TANK <6G7>

## REMOVAL AND INSTALLATION

**Pre-removal Operation**
- Draining Fuel
- Fuel Line Pressure Reduction (Refer to GROUP 13A - On-vehicle Service.)
- Transmission Mount Center Member Assembly (Refer to GROUP 32.)

**Post-installation Operation**
- Transmission Mount Center Member Assembly (Refer to GROUP 32.)
- Fuel Leakage Inspection
- Refilling Fuel

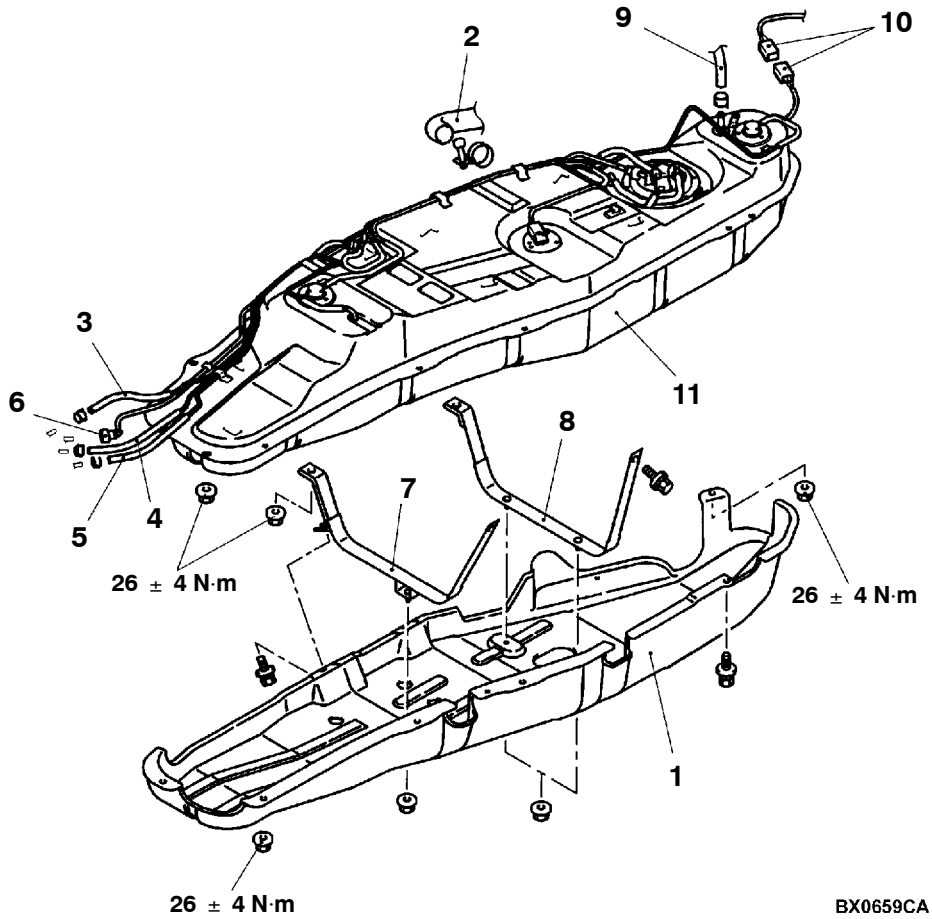


**Removal steps**

1. Fuel tank under protector
2. Fuel filler hose connection
3. Fuel return hose connection
4. Fuel vapor hose connection
5. Fuel return hose connection
6. ▶A◀ Fuel high-pressure hose connection
7. Fuel tank band, front
8. Fuel tank band, rear
9. Fuel tank breather hose connection
10. ◀A▶ Fuel tank harness connector connection
11. ◀A▶ Fuel tank assembly

Purchased from www.WorkshopManuals.co.uk

www.WorkshopManuals.co.uk

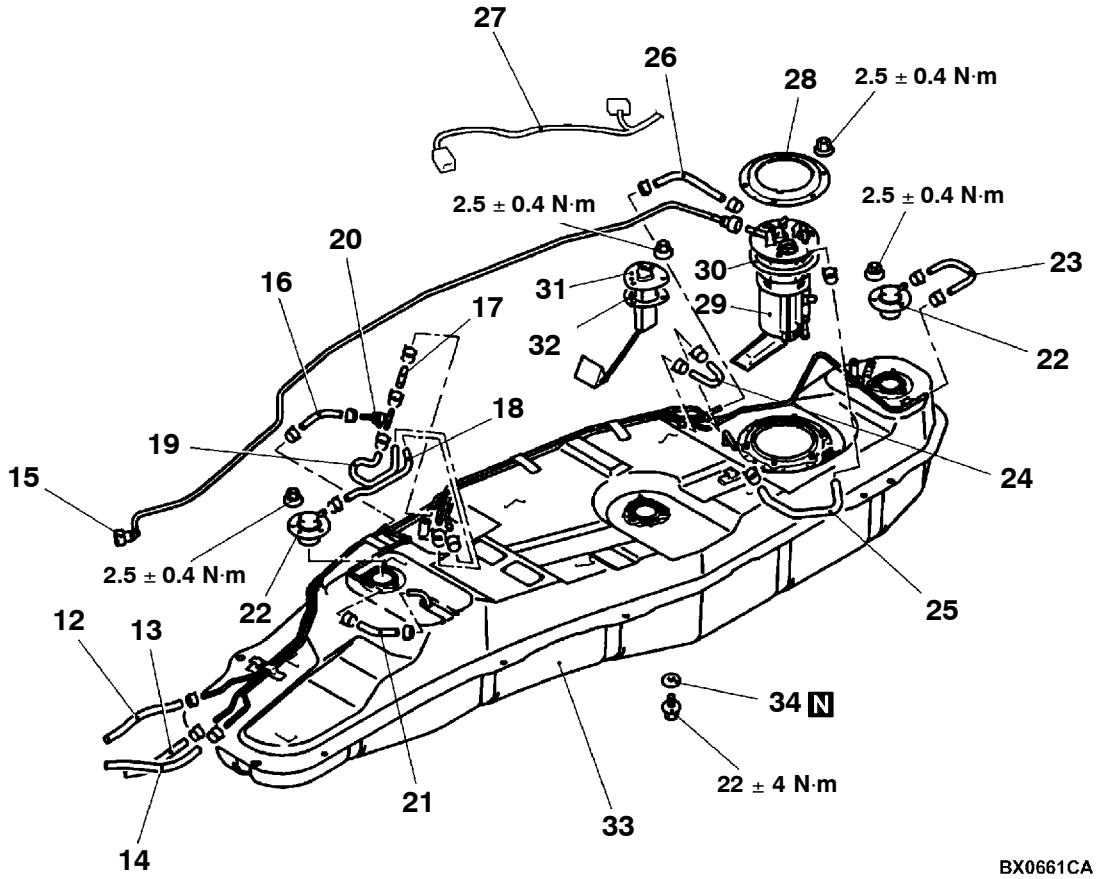


12. Fuel return hose
13. Fuel vapor hose
14. Fuel return hose
15. Fuel high-pressure hose
16. Fuel tank vapor hose
17. Fuel tank vapor hose
18. Fuel tank vapor hose
19. Fuel tank vapor hose
20. Fuel check valve
21. Fuel tank hose
22. Valve assembly
23. Fuel tank vapor hose
24. Fuel tank vapor hose
25. Fuel tank suction hose
26. Fuel tank return hose
27. Fuel tank harness
28. Tapping plate
29. Fuel pump module assembly
30. Packing
31. Fuel gauge unit
32. Packing
33. Fuel tank
34. Gasket

Purchased from www.WorkshopManuals.co.uk

www.WorkshopManuals.co.uk

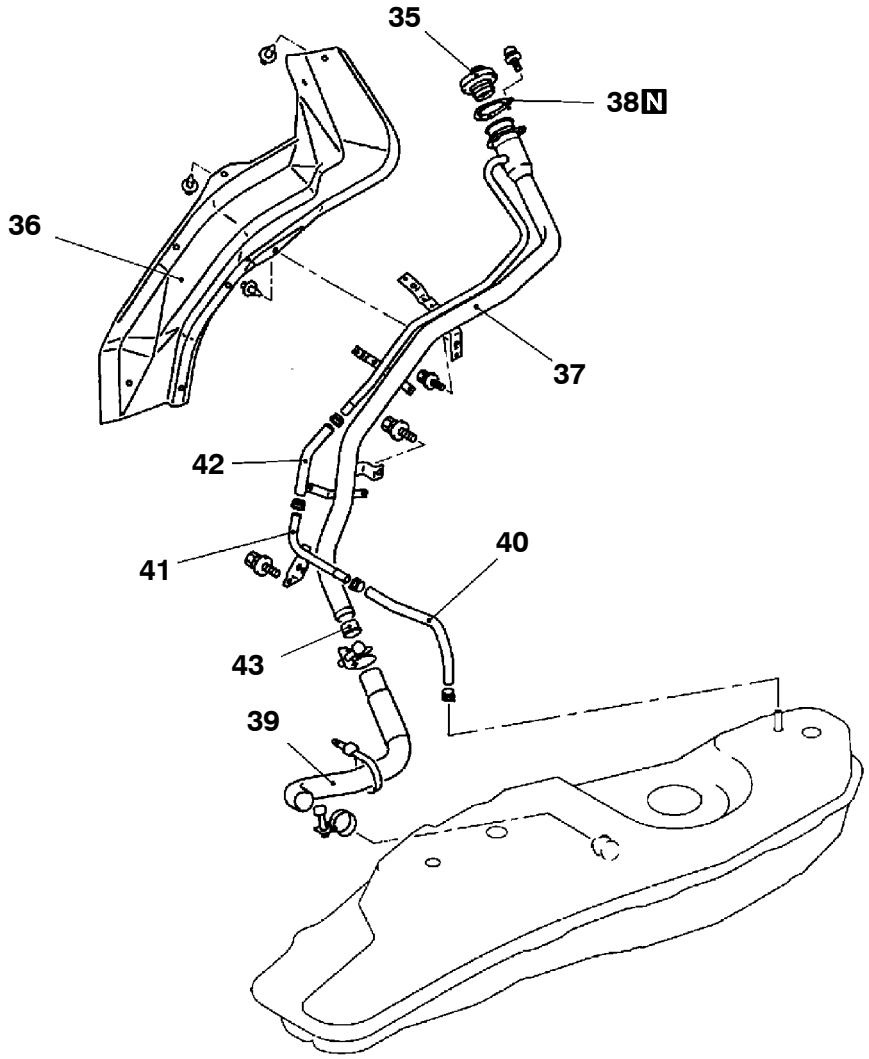


AX0660CA

35. Fuel cap
36. Fuel filler neck protector
37. Fuel filler neck
38. Fuel filler neck gasket
39. Fuel filler hose
40. Fuel filler neck breather hose
41. Fuel filler pipe assembly
42. Fuel filler neck breather hose
43. Shut-off valve

## REMOVAL SERVICE POINT

### ◀A▶ FUEL TANK BREATHER HOSE/FUEL TANK CONNECTOR DISCONNECTION

Lower the fuel tank until the fuel tank breather hose and the fuel tank harness connectors can be disconnected.

Purchased from www.WorkshopManuals.co.uk

www.WorkshopManuals.co.uk

## INSTALLATION SERVICE POINT

### ▶A◀ FUEL HIGH-PRESSURE HOSE INSTALLATION

**Caution**
**Snap the high-pressure fuel hose one-touch joint into place, then pull back slightly on the hose to assure it is securely fitted. However, the connection should have a play of approx. 3 mm.**

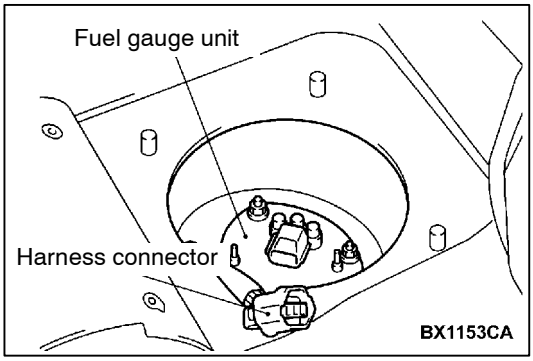


## INSPECTION

### FUEL GAUGE UNIT REPLACEMENT <SHORT WHEELBASE>

1. Slide the front seat (driver's side) forward and turn up the service hole notch on the carpet.
2. Remove the service hole cover and packing.
3. Disconnect the harness connector.
4. Unscrew the mounting nut to remove the fuel gauge unit.
5. Assemble the fuel gauge unit and tighten the mounting nut to the specified torque.

   **Tightening torque : 2.5 ± 0.4 N·m**

6. Connect the harness connector.
7. Install the service hole cover and packing.
8. Return the floor carpet and slide the front seat (driver's side).

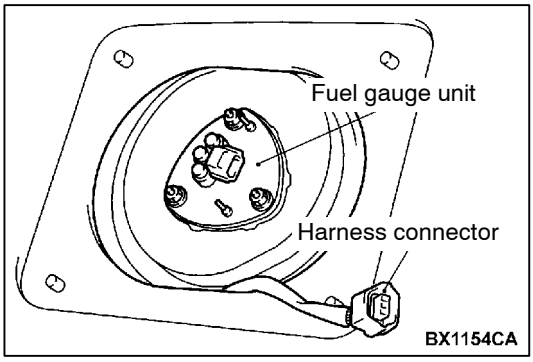


### <LONG WHEELBASE>

1. Tumble the second seat.
2. Remove the service hole cover (upper side) and the packing located under the second seat.
3. Remove the second seat, the rear scuff plate, the anchor bolts for the outer seat belt (second) and mounting screws of the lower quarter trim. Tear off the carpet. (Refer to GROUP 52A.)
4. Remove the service hole cover and the packing located between the front seat and the second seat.
5. Disconnect the harness connector.
6. Unscrew the mounting nut to remove the fuel gauge unit.
7. Assemble the fuel gauge unit and tighten the mounting nut to the specified torque.

   **Tightening torque : 2.5 ± 0.4 N·m**

8. Connect the harness connector.
9. Attach the service hole cover and the packing located between the front seat and the second seat.

Purchased from www.WorkshopManuals.co.uk

www.WorkshopManuals.co.uk

10. Restore the carpet; attach the second seat, the rear scuff plate, anchor bolts for the outer seat belt (second) and mounting screws of the lower quarter trim. (Refer to GROUP 52A.)
11. Attach the service hole cover located under the second seat and the packing.
12. Restore the second seat.

## FUEL GAUGE UNIT CHECK

Refer to GROUP 54 - Combination meter.

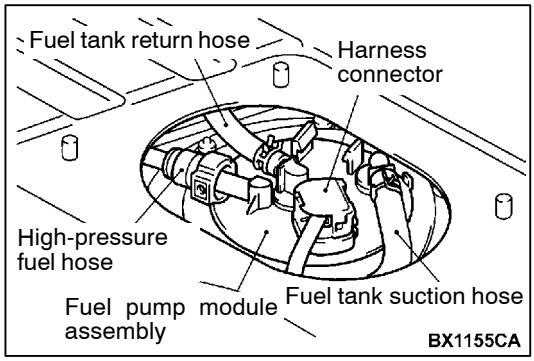


## FUEL PUMP MODULE REPLACEMENT <SHORT WHEELBASE>

1. Remove the front scuff plate and outer seat belt (rear) anchor bolt, and then turn the carpet up. (Refer to GROUP 52A.)
2. Remove the service hole cover and packing.
3. Disconnect the harness connector.
4. Disconnect the high-pressure fuel hose and the fuel tank hose.
5. Remove the mounting nuts, and remove the fuel pump module.
6. Install the fuel pump module, and tighten the mounting nuts to the specified torque.

   **Tightening torque: 2.5 ± 0.4 N·m**

7. Connect the high-pressure fuel hose and the fuel tank hose.
8. Connect the harness connector.
9. Install the service hole cover and packing.
10. Spread the carpet and then install the front scuff plate and outer seat belt (rear) anchor bolt. (Refer to GROUP 52A.)

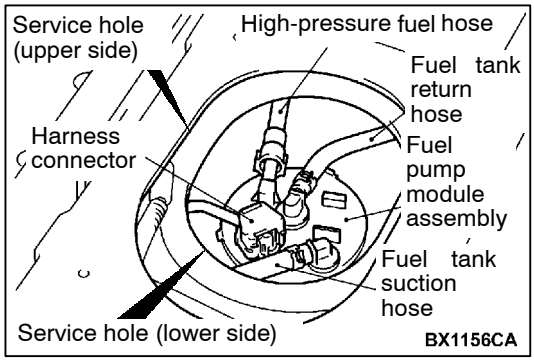


## <LONG WHEELBASE>

1. Tumble the second seat.
2. Remove the service hole cover (upper side) and the packing.
3. Remove the service hole cover (lower side) and the packing.
4. Disconnect the harness connector.
5. Disconnect the fuel high-pressure hose and the fuel tank hose.

Purchased from www.WorkshopManuals.co.uk

www.WorkshopManuals.co.uk

6. Unscrew the mounting nut to remove the fuel pump module.
7. Assemble the fuel pump module and tighten the mounting nut to the specified torque.

   **Tightening torque: 2.5 ± 0.4 N·m**
8. Connect the fuel high-pressure hose and the fuel tank hose.
9. Connect the harness connector.
10. Attach the service hole cover (lower side) and the packing.
11. Attach the service hole cover (upper side) and the packing.
12. Restore the second seat.

## DISASSEMBLY AND REASSEMBLY

### FUEL PUMP MODULE

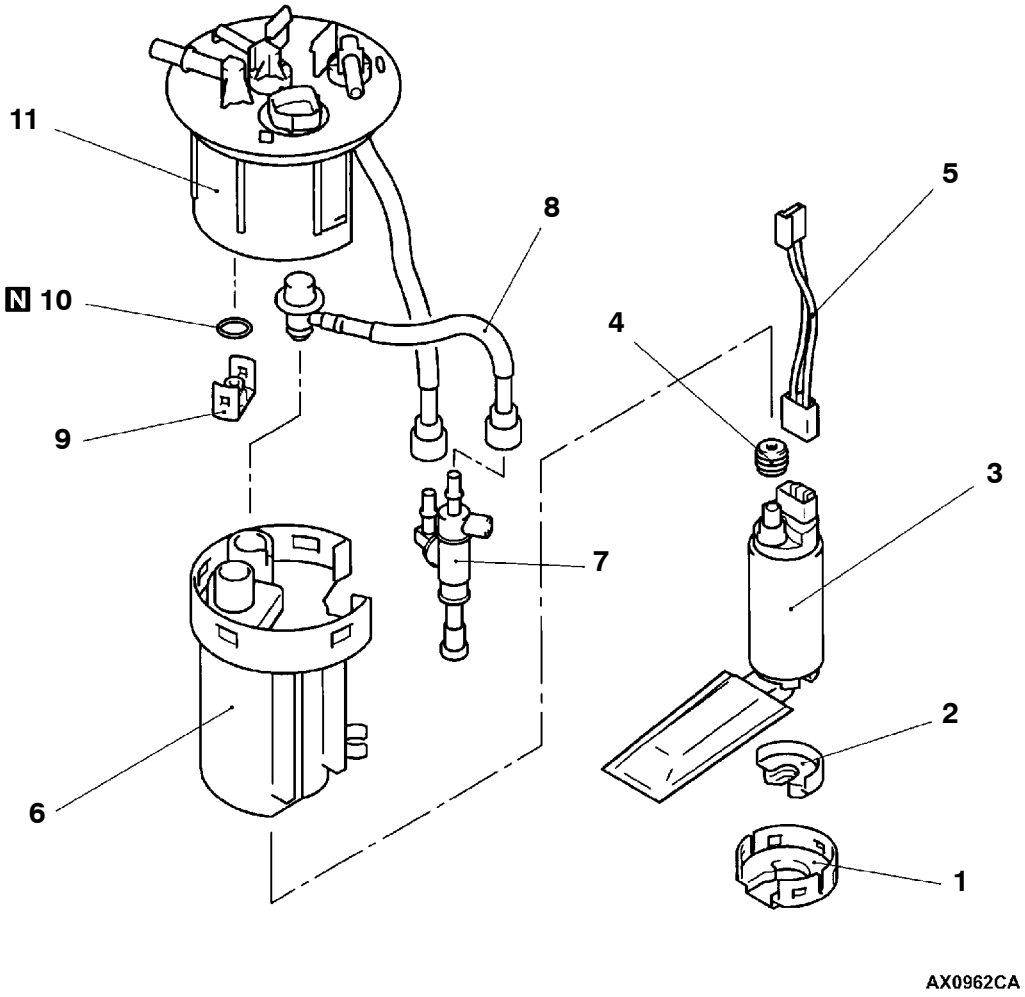


**Disassembly steps**

1. Fuel pump bracket
2. Fuel pump cushion
3. Fuel pump (low-pressure)
4. ▶A◀ Grommet
5. Pump harness
6. Housing
7. Assist pump
8. Fuel pressure regulator (low-pressure)
9. Cap
10. ▶A◀ O-ring
11. Fuel high-pressure filter assembly

Purchased from www.WorkshopManuals.co.uk

www.WorkshopManuals.co.uk

## REASSEMBLY SERVICE POINTS

### ▶A◀ O-RING/GROMMET INSTALLATION

Apply a fuel to O-ring and grommet before installing them, to prevent them from being damaged or twisted.

# FUEL TANK <4D5, 4M4>

## REMOVAL AND INSTALLATION

**Pre-removal Operation**
- Draining Fuel
- Fuel Line Pressure Reduction (Refer to GROUP 13A – On-vehicle Service.)
- Transmission Mount Center Member Assembly (Refer to GROUP 32.)

**Post-installation Operation**
- Transmission Mount Center Member Assembly (Refer to GROUP 32.)
- Fuel Leakage Inspection
- Refilling Fuel

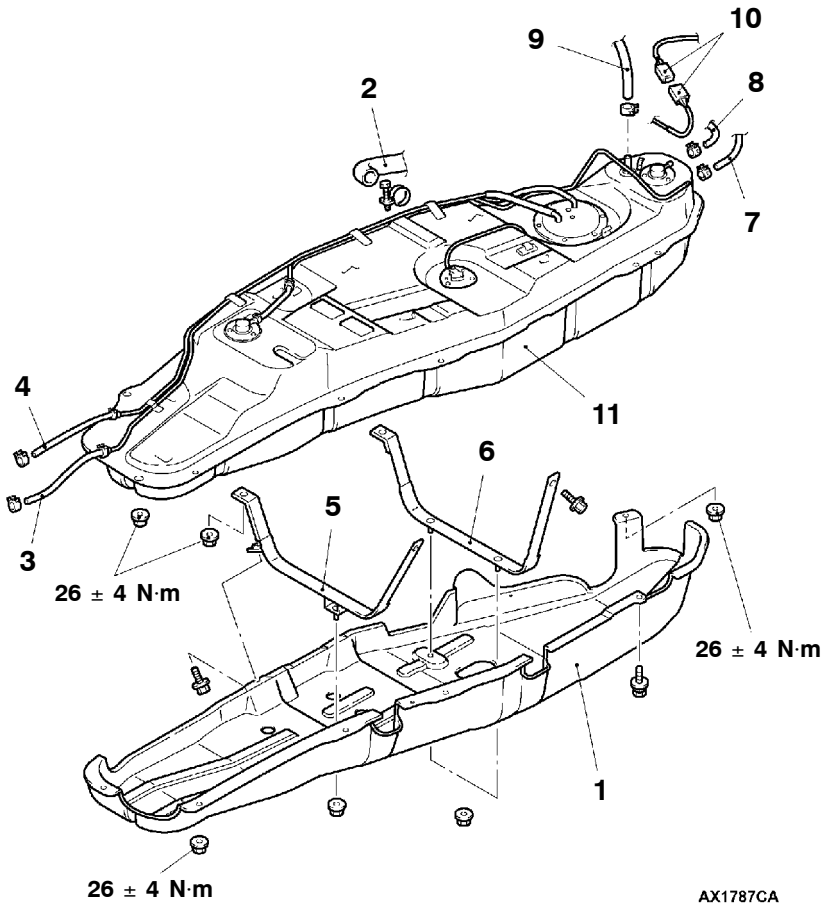


**Removal steps**

1. Fuel tank under protector
2. Fuel filler hose connection
3. Fuel return hose connection
4. Fuel main hose connection
5. Fuel tank band front
6. Fuel tank band rear

◀A▶
◀A▶

7. Fuel filler neck vapor hose (B) connection
8. Fuel filler neck vapor hose (A) connection
9. Fuel tank breather hose connection
10. Fuel tank harness connector connection
11. Fuel tank assembly

Purchased from www.WorkshopManuals.co.uk

www.WorkshopManuals.co.uk

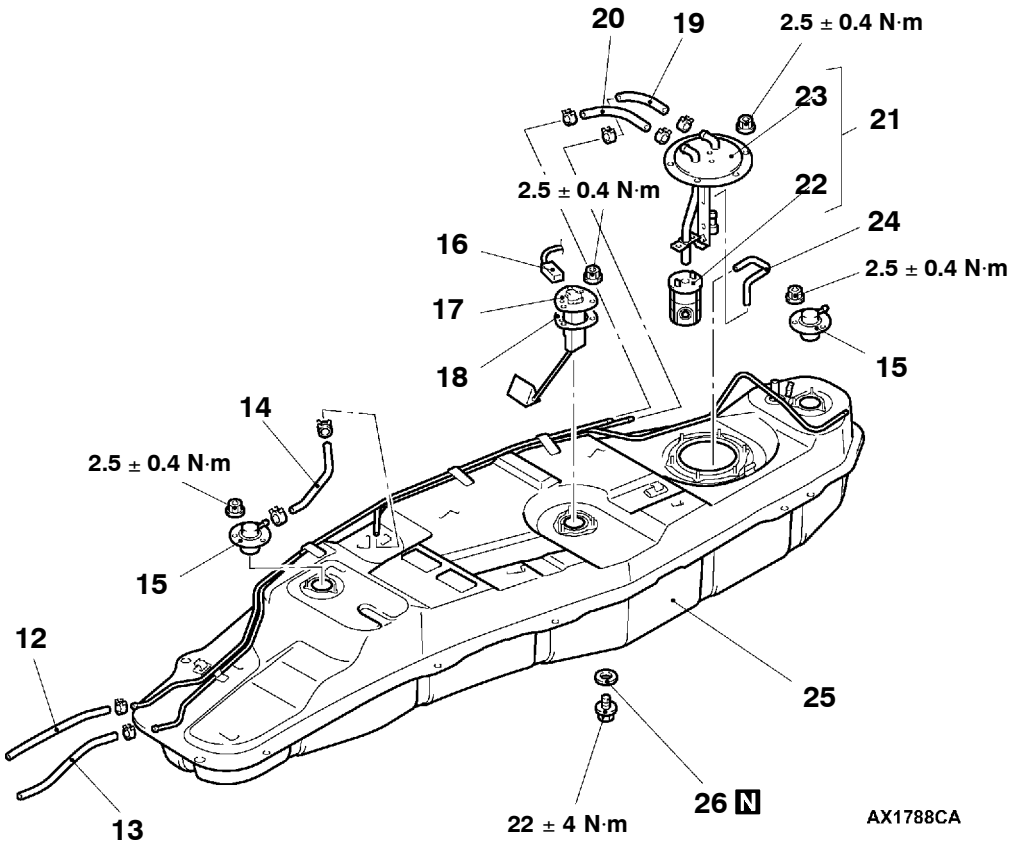


12. Fuel return hose
13. Fuel main hose
14. Fuel tank vapor hose
15. Valve assembly
16. Fuel tank harness
17. Fuel gauge unit
18. Packing
19. Fuel tank return hose
20. Fuel tank main hose
21. Fuel filter pipe assembly
22. Fuel filter
23. Pipe assembly
24. Fuel tank suction hose
25. Fuel tank
26. Gasket

Purchased from www.WorkshopManuals.co.uk

www.WorkshopManuals.co.uk

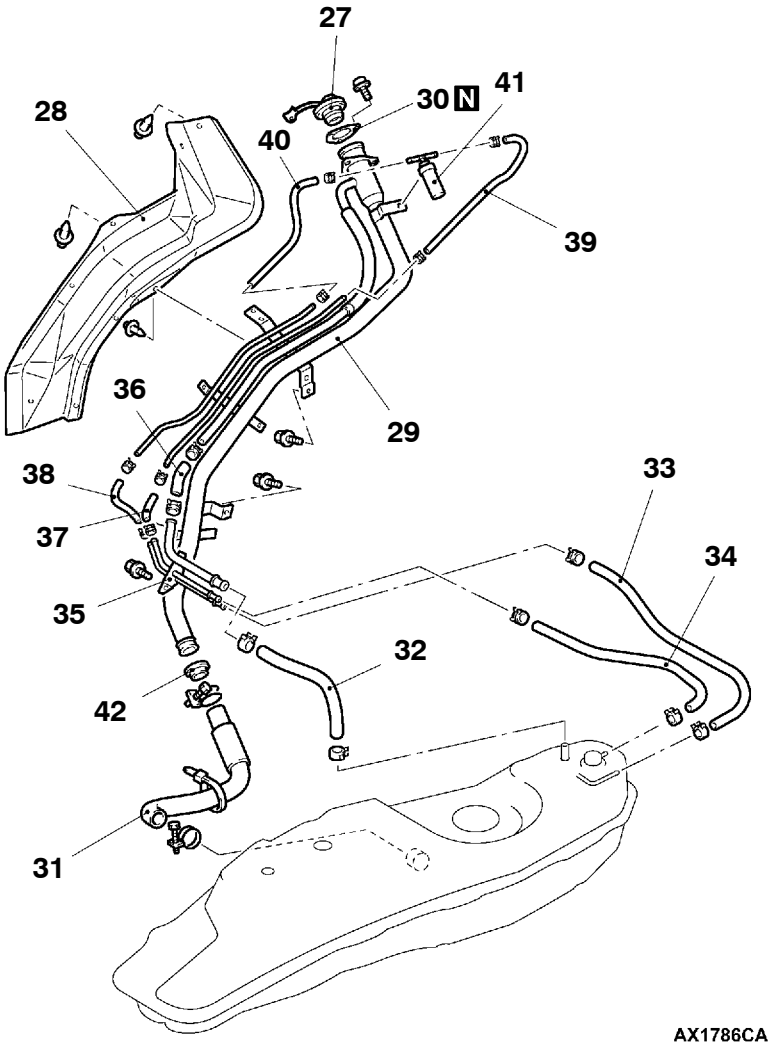


27. Fuel cap
28. Fuel filler neck protector
29. Fuel filler neck
30. Fuel filler neck gasket
31. Fuel filler hose
32. Fuel filler neck breather hose
33. Fuel filler neck vapor hose (B)
34. Fuel filler neck vapor hose (A)
35. Fuel filler pipe assembly
36. Fuel filler neck breather hose
37. Fuel filler neck vapor hose
38. Fuel filler neck vapor hose
39. Fuel filler neck vapor hose (B)
40. Fuel filler neck vapor hose (A)
41. Fuel filler neck check valve assembly
42. Shut-off valve

## REMOVAL SERVICE POINT

### ◀A▶ FUEL TANK BREATHER HOSE/FUEL TANK CONNECTOR DISCONNECTION

Lower the fuel tank until the fuel tank breather hose and the fuel tank harness connectors can be disconnected.

Purchased from www.WorkshopManuals.co.uk

www.WorkshopManuals.co.uk

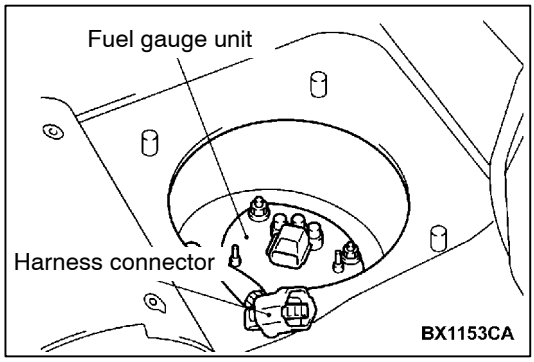


## INSPECTION

### FUEL GAUGE UNIT REPLACEMENT <SHORT WHEELBASE>

1. Slide the front seat (driver's side) forward and turn up the service hole notch on the carpet.
2. Remove the service hole cover and packing.
3. Disconnect the harness connector.
4. Unscrew the mounting nut to remove the fuel gauge unit.
5. Assemble the fuel gauge unit and tighten the mounting nut to the specified torque.

   **Tightening torque: 2.5 ± 0.4 N·m**

6. Connect the harness connector.
7. Install the service hole cover and packing.
8. Return the floor carpet and slide the front seat (driver's side).

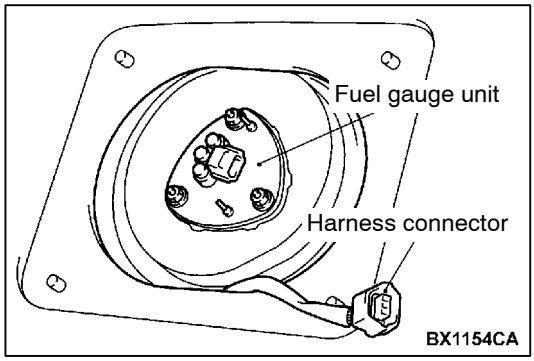


### <LONG WHEELBASE>

1. Tumble the second seat.
2. Remove the service hole cover (upper side) and the packing located under the second seat.
3. Remove the second seat, the rear scuff plate, the anchor bolts for the outer seat belt (second) and mounting screws of the lower quarter trim. Tear off the carpet. (Refer to GROUP 52A.)
4. Remove the service hole cover and the packing located between the front seat and the second seat.
5. Disconnect the harness connector.
6. Unscrew the mounting nut to remove the fuel gauge unit.
7. Assemble the fuel gauge unit and tighten the mounting nut to the specified torque.

   **Tightening torque : 2.5 ± 0.4 N·m**

8. Connect the harness connector.
9. Attach the service hole cover and the packing located between the front seat and the second seat.
10. Restore the carpet; attach the second seat, the rear scuff plate, anchor bolts for the outer seat belt (second) and mounting screws of the lower quarter trim. (Refer to GROUP 52A.)
11. Attach the service hole cover located under the second seat and the packing.
12. Restore the second seat.

Purchased from www.WorkshopManuals.co.uk

www.WorkshopManuals.co.uk

## FUEL GAUGE UNIT CHECK

Refer to GROUP 54 - Combination Meter.

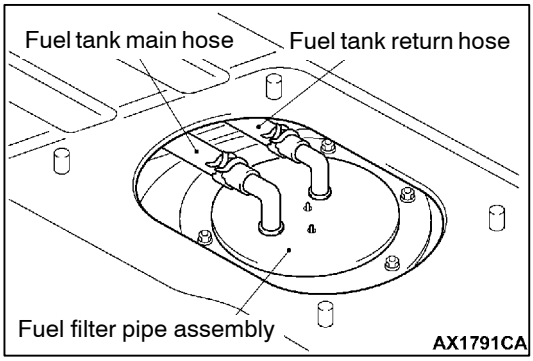


## FUEL FILTER PIPE ASSEMBLY REPLACEMENT <SHORT WHEELBASE>

1. Remove the front scuff plate and outer seat belt (rear) anchor bolt, and then turn the carpet up. (Refer to GROUP 52A.)
2. Remove the service hole cover and packing.
3. Disconnect the fuel tank return hose and the fuel tank main hose.
4. Remove the mounting nuts, and remove the fuel filter pipe assembly.
5. Install the fuel filter pipe assembly, and tighten the mounting nuts to the specified torque.

   **Tightening torque: 2.5 ± 0.4 N·m**

6. Connect the fuel tank return hose and the fuel tank main hose.
7. Install the service hole cover and packing.
8. Spread the carpet and then install the front scuff plate and outer seat belt (rear) anchor bolt. (Refer to GROUP 52A.)

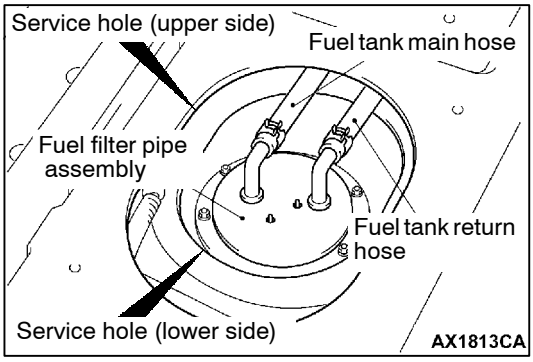


## <LONG WHEELBASE>

1. Tumble the second seat.
2. Remove the service hole cover (upper side) and the packing.
3. Remove the service hole cover (lower side) and the packing.
4. Disconnect the fuel tank return hose and the fuel tank main hose.
5. Unscrew the mounting nut to remove the fuel filter pipe assembly.
6. Assemble the fuel filter pipe assembly and tighten the mounting nut to the specified torque.

   **Tightening torque: 2.5 ± 0.4 N·m**

7. Connect the fuel tank return hose and the fuel tank main hose.
8. Attach the service hole cover (lower side) and the packing.
9. Attach the service hole cover (upper side) and the packing.
10. Restore the second seat.

Purchased from www.WorkshopManuals.co.uk

www.WorkshopManuals.co.uk

# FUEL FILTER

## REMOVAL AND INSTALLATION

**Pre-removal Operation**
- Engine Cover Removal
  (Refer to GROUP 11B - Camshaft)
- Battery, Battery Tray Removal

**Post-installation Operation**
- Fuel Line Air-bleeding
  (Refer to GROUP 13B - On-vehicle Service.)
- Battery, Battery Tray Installation
- Engine Cover Installation
  (Refer to GROUP 11B - Camshaft.)

**<4D5>**

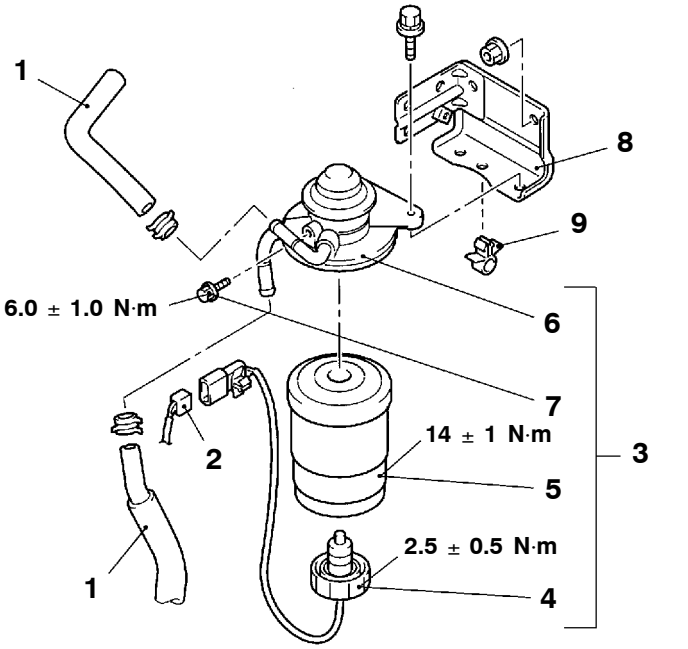


**Removal steps**

▶A◀ 1. Fuel hose
2. Water level sensor connector connection
3. Fuel filter assembly
4. Water level sensor
5. Fuel filter cartridge
6. Fuel filter pump
7. Air plug
8. Fuel filter bracket
9. Clip

Purchased from www.WorkshopManuals.co.uk

www.WorkshopManuals.co.uk

<4M4>

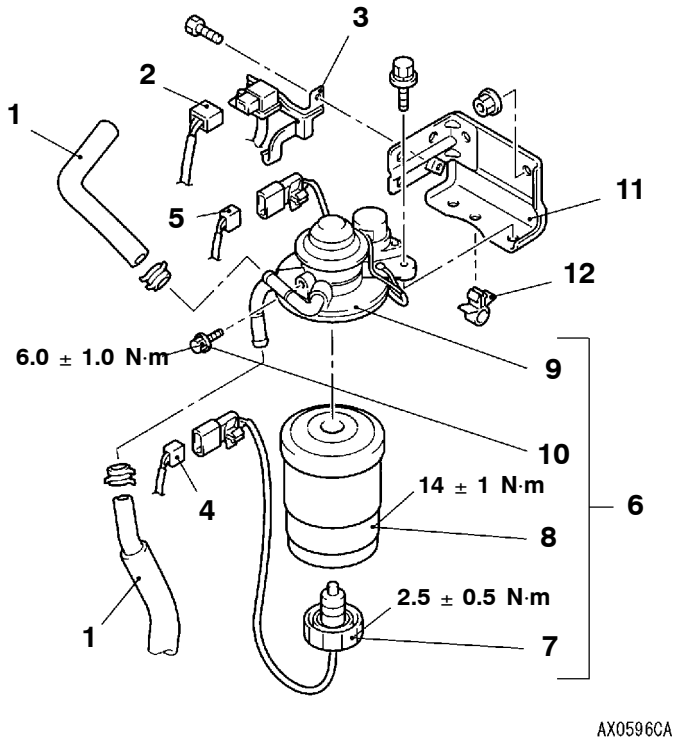


**Removal steps**

▶A◀ 1. Fuel hose
2. Boost sensor connector
3. Boost sensor bracket
4. Water level sensor connector connection
5. Fuel line heater connector <Vehicles for cold zone>
6. Fuel filter assembly
7. Water level sensor
8. Fuel filter cartridge
9. Fuel filter pump
10. Air plug
11. Fuel filter bracket
12. Clip

## INSTALLATION SERVICE POINT

### ▶A◀ FUEL MAIN HOSE INSTALLATION

If the pipe has a stepped part, connect securely up to the stepped part. If the pipe has no stepped part, insert so that the inserted portion is 25 - 30 mm <4D5>, 25 - 32 mm <4M4> long.

Purchased from www.WorkshopManuals.co.uk

www.WorkshopManuals.co.uk

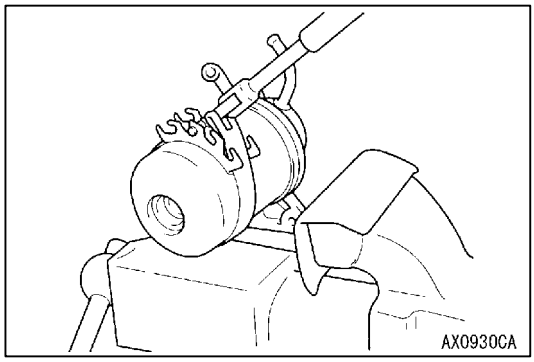


## INSPECTION

### FUEL FILTER CARTRIDGE REPLACEMENT

1. Remove the fuel filler cap, and depressurise the fuel tank.
2. Disconnect the connector and the fuel hose.
3. Remove the boost sensor bracket from the fuel filter bracket. <4M4>
4. Remove the fuel filter assembly from the fuel filter bracket.
5. Remove the water level sensor from the fuel filter cartridge.
6. Use a filter wrench to remove the fuel filter cartridge from the fuel filter pump.

   **Caution**

   **Cover the cartridge port with rag to prevent fuel from flowing out.**

7. Install a new filter, and bleed the air from fuel line. (Refer to GROUP 13B - On-vehicle Service.) <4D5> (Refer to GROUP 13C - On-vehicle Service.) <4M4>
8. Start the engine, and check that there is no fuel leakage.

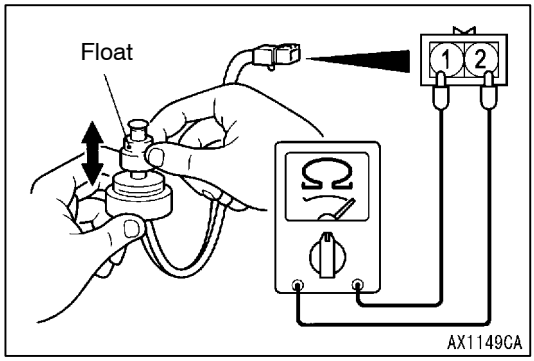


### WATER LEVEL SENSOR CHECK

1. Connect the circuit tester to the water level sensor.
2. There should be continuity when the float is raised, while there is no continuity when it is lowered.
3. Replace the water level sensor if it is faulty.

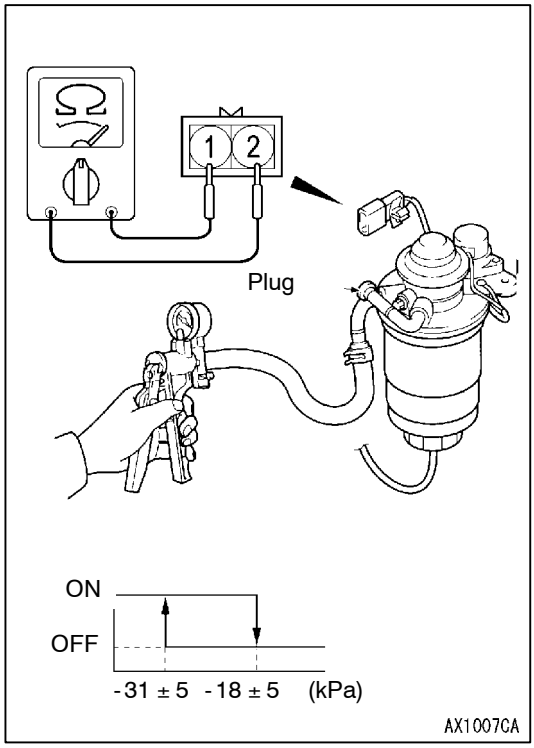


### FUEL LINE HEATER CONTINUITY CHECK <4M4>

1. Connect a hand vacuum pump to the outlet port of the fuel filter pump, and plug the inlet port as shown.
2. Connect a circuit tester to the fuel line heater connector.
3. Using hand vacuum pump apply a vacuum to the fuel filter pump body, check that there is a continuity between terminals when the pressure becomes -31 ± 5 kPa or less.
4. Lower the load gradually and became -18 ± 5 kPa, check that there is no continuity.
5. The fuel line heater is normal if the conditions 3 and 4 above are satisfied.
6. Replace the fuel filter pump if defective.

Purchased from www.WorkshopManuals.co.uk

www.WorkshopManuals.co.uk

**NOTES**

Purchased from www.WorkshopManuals.co.uk

www.WorkshopManuals.co.uk

# DIESEL FUEL
# <4D5-STEP III>

**Click on the applicable bookmark to selected the required model year.**

Purchased from www.WorkshopManuals.co.uk

www.WorkshopManuals.co.uk


# DIESEL FUEL <4D5-STEP III>

## CONTENTS


**GENERAL . . . . . 2**
- Outline of Change . . . . . 2

**GENERAL INFORMATION . . . . . 2**

**SERVICE SPECIFICATIONS . . . . . 4**

**SEALANT . . . . . 4**

**SPECIAL TOOLS . . . . . 5**

**TROUBLESHOOTING . . . . . 6**

**ON-VEHICLE SERVICE . . . . . 55**
- Injection Nozzle Check and Adjustment . . . . . 55
- Injection Timing Check and Adjustment . . . . . 55
- Idle Speed Check and Adjustment . . . . . 55
- Accelerator Pedal Position Sensor (APS) Adjustment . . . . . 56
- Control Relay Continuity Check . . . . . 57
- Accelerator Pedal Position Sensor (APS) Check . . . . . 57
- Idle Switch Check . . . . . 58
- Boost Air Temperature Sensor (Intake Air Temperature Sensor) Check . . . . . 58
- Engine Coolant Temperature Sensor Check . . . . . 59
- Evacuation of Water from Fuel Filter . . . . . 59
- Fuel Filter Cartridge Replacement . . . . . 60
- Evacuation of Air from Fuel Line . . . . . 60
- EGR Valve Position Sensor Check . . . . . 60
- Fuel Injection Pump Check . . . . . 61
- Throttle Solenoid Valve Check . . . . . 62
- Throttle Actuator Check . . . . . 63
- Variable Geometry Solenoid Valve Check . . . . . 63
- EGR Control Solenoid Valve Check . . . . . 63

**FUEL INJECTION NOZZLE . . . . . 64**

**FUEL INJECTION PUMP . . . . . 64**

**CRANKSHAFT POSITION SENSOR . . . . . 66**

**ENGINE-ECU . . . . . 66**


Purchased from www.WorkshopManuals.co.uk

www.WorkshopManuals.co.uk

# GENERAL

## OUTLINE OF CHANGE

An electronically-controlled injection pump has been added in order to comply with Regulation STEP III. Due to this, the following service procedures have been added.

# GENERAL INFORMATION

The electronically-controlled fuel injection system consists of sensors which detect the condition of the diesel engine, an engine-ECU which controls the system based on signals from these sensors, and actuators which operate according to control commands from the engine-ECU.
The engine-ECU carries out operations such as fuel injection rate control, fuel injection timing control and idle up control. In addition, the engine-ECU is equipped with several self-diagnosis functions which make troubleshooting easier in the event that a problem develops.

### FUEL INJECTION RATE CONTROL

The fuel injection completion timing is controlled by means of a solenoid-type spill valve to ensure that the optimum amount of fuel is supplied to the engine in accordance with gradual changes in the engine running condition.
Before fuel injection starts, the solenoid-type spill valve is on (energized), so that the valve is closed. As the plunger turns and rises, fuel is sent out under pressure, and when the fuel flow rate reaches the target value for fuel injection, the solenoid-type spill valve turns off. When the solenoid-type spill valve turns off, the fuel under high pressure inside the plunger is leaked out into the pump chamber and fuel injection is completed.

### FUEL INJECTION TIMING CONTROL

The position of the injection pump timer piston is controlled so that fuel injection is carried out at the optimum timing in accordance with the engine running condition.
The timer piston position is determined by duty control of the timing control solenoid valve which is located in the line between the high-pressure chamber and the low-pressure chamber of the timer piston.
The fuel injection timing is advanced by increasing the control duty of the timing control solenoid valve.

### IDLE SPEED CONTROL

Controlling the fuel injection rate in accordance with the engine running condition maintains the idle speed at the optimum condition.

### SELF-DIAGNOSIS FUNCTION

- When an abnormality is detected in any of the sensors or actuators, the engine warning lamp illuminates to warn the driver.
- When an abnormality is detected in any of the sensors or actuators, a diagnosis code number corresponding to the problem which occurred is output.
- The RAM data relating to the sensors and actuators which is stored in the engine-ECU can be read using the MUT-II. In addition, the actuators can be force-driven under certain conditions.

### OTHER CONTROL FUNCTIONS

1. Power Supply Control
   When the ignition switch is turned to ON, the relay turns on and power is supplied to components such as the timing control solenoid valve.
2. Intake Air Throttle Control
   When the engine-ECU detects an abnormality in any of the sensors or actuators, the throttle valve is half opened to restrict the amount of intake air in order to prevent the vehicle from running away.
3. A/C Relay Control
   Turns the compressor clutch of the A/C ON and OFF
4. Condenser Fan Motor Relay Control
   Controls the condenser fan motor relay based on the A/C switch, engine coolant temperature and vehicle speed input signals.
5. Glow Control
   Refer to GROUP 16.
6. EGR Control
   Refer to GROUP 17.

Purchased from www.WorkshopManuals.co.uk

www.WorkshopManuals.co.uk

## CONTROL SYSTEM DIAGRAM

★1. Pump speed sensor
★2. Crank angle sensor
★3. Engine coolant temperature sensor
★4. Boost pressure sensor
★5. Fuel temperature sensor
★6. Boost air temperature sensor
★7. Control sleeve position sensor
★8. Timer piston position sensor
★9. EGR valve position sensor
★10. Variable geometry control pressure sensor

- Accelerator pedal position sensor (main)
- Accelerator pedal position sensor (sub)
- Idle switch
- Power supply
- Ignition switch-IG
- Ignition switch-ST
- Vehicle speed sensor
- A/C switch
- A/C relay switch
- Injection volume adjusting ROM
- Barometric pressure sensor (ECU built-in)

⇨ Engine-ECU ⇨

☆1. GE actuator (electronic governor)
☆2. Timing control valve
☆3. EGR control solenoid valve No. 1
☆4. EGR control solenoid valve No. 2
☆5. Throttle solenoid valve
☆6. Fuel cut solenoid valve
☆7. Variable geometry solenoid valve

- Control relay
- A/C relay
- Condenser fan relay
- Glow indicator lamp
- Glow plug relay
- Engine warning lamp
- Diagnosis output

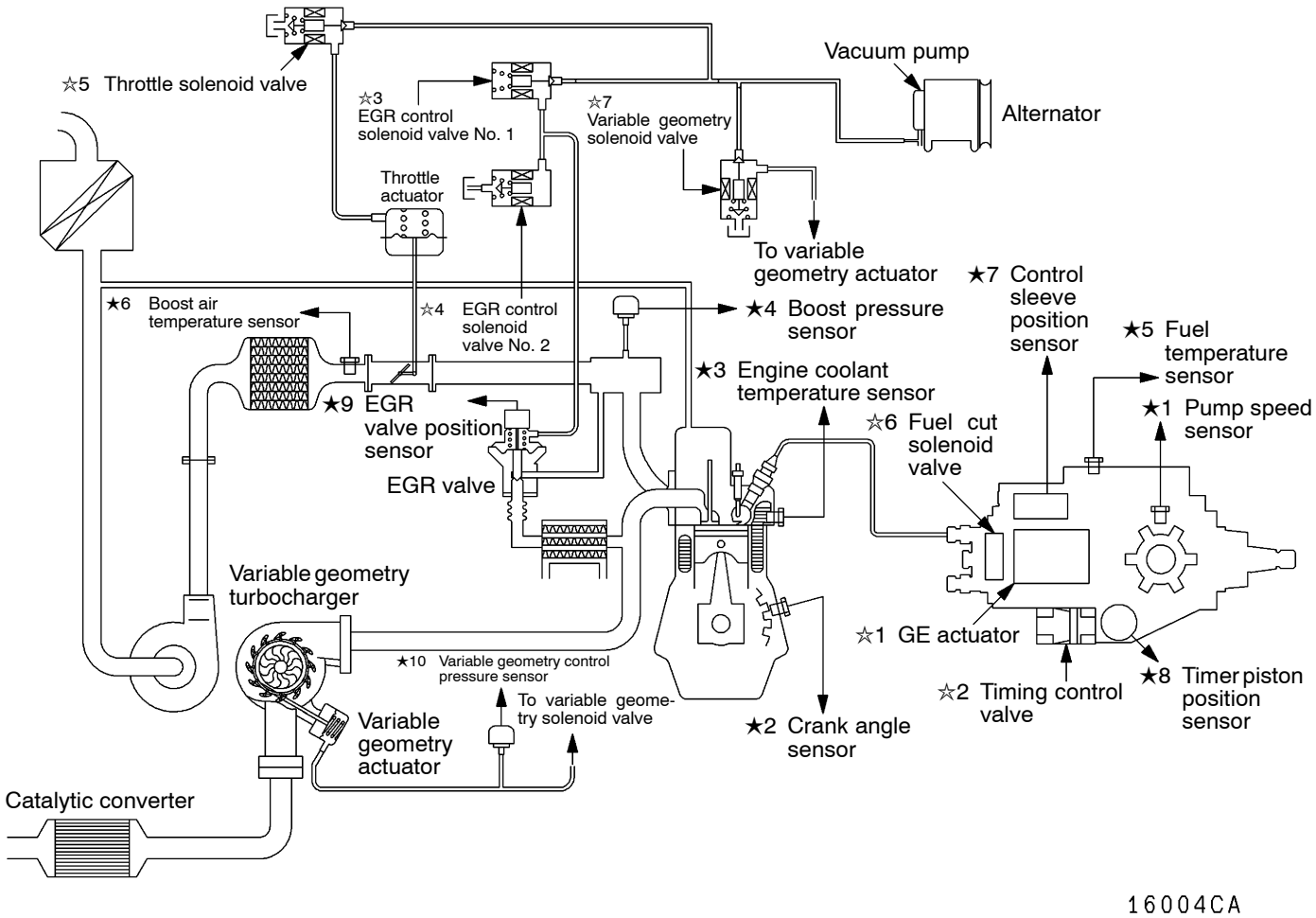


Purchased from www.WorkshopManuals.co.uk

www.WorkshopManuals.co.uk

# SERVICE SPECIFICATIONS

| Item | | Standard value |
|---|---|---|
| Fuel injection initial pressure kPa | | 14,710 - 15,490 |
| Accelerator pedal position sensor reference voltage V | | 0.985 - 1.085 |
| Accelerator pedal position sensor resistance kΩ | | 3.5 - 6.5 |
| Boost air temperature sensor (Intake air temperature sensor) resistance kΩ | When the temperature is 20°C | 2.3 - 3.0 |
| | When the temperature is 80°C | 0.30 - 0.42 |
| Engine coolant temperature sensor resistance kΩ | When the temperature is 20°C | 2.1 - 2.7 |
| | When the temperature is 80°C | 0.26 - 0.36 |
| Fuel cut solenoid valve resistance Ω | | 6.8 - 9.2 |
| Timing control valve resistance Ω | | 10.8 - 11.2 |
| Timer piston position sensor resistance Ω | Connector terminals No. 1 - No. 2 | 160 - 168 |
| | Connector terminals No. 1 - No. 3 | 80 - 84 |
| | Connector terminals No. 2 - No. 3 | 80 - 84 |
| Control sleeve position sensor resistance Ω | Connector terminals No. 4 - No. 12 | 11.2 - 12.4 |
| | Connector terminals No. 4 - No. 8 | 5.6 - 6.2 |
| | Connector terminals No. 8 - No. 12 | 5.6 - 6.2 |
| GE actuator (electronic governor) resistance Ω | Connector terminals No. 6 - No. 10 | 0.64 - 0.72 |
| Fuel temperature sensor resistance kΩ | Connector terminals No. 7 - No. 11 | 1.4 - 2.6 |
| Pump speed sensor resistance kΩ | | 1.36 - 1.84 |
| Throttle solenoid valve resistance Ω | | 36 - 44 |

# SEALANT

| Item | Specified sealant |
|---|---|
| Engine coolant temperature sensor | 3M Nut Locking Part No. 4171 or equivalent |

Purchased from www.WorkshopManuals.co.uk

www.WorkshopManuals.co.uk

# SPECIAL TOOLS

| Tools | Number | Name | Application |
|---|---|---|---|
| 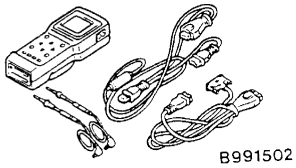  | MB991502 | MUT-II sub assembly | Electronically controlled fuel injection system check |
| 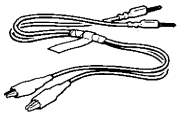 | MB991529 | Diagnosis code check harness | Diagnosis code reading |
| 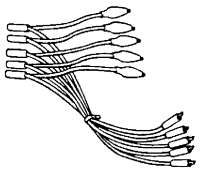 | MB991348 | Test harness set | ● Boost pressure sensor check<br>● Variable geometry control pressure sensor check |
| 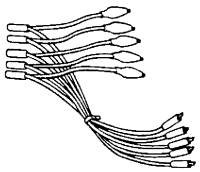 | MB991658 | Test harness set | ● APS adjustment<br>● Inspection using an analyzer |
| 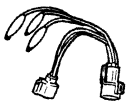 | MD998478 | Test harness (3-pin, square) | ● Crank angle sensor check<br>● Inspection using an analyzer |
| 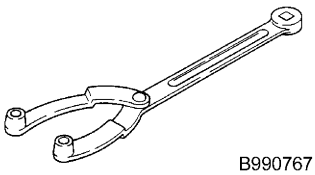  | MB990767 | End yoke holder | Holding the fuel injection pump sprocket |
| 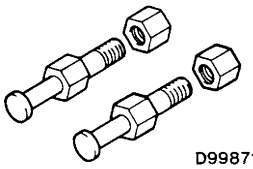  | MD998719 | Crankshaft pulley holder pin | |
| 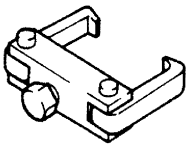 | MD998388 | Injection pump sprocket puller | Fuel injection pump sprocket removal |

Purchased from www.WorkshopManuals.co.uk

www.WorkshopManuals.co.uk

# TROUBLESHOOTING

## STANDARD FLOW OF DIAGNOSTIC TROUBLESHOOTING

Refer to GROUP 00 - How to Use Troubleshooting/Inspection Service Points.

NOTE
When replacing the engine-ECU, replace immobilizer-ECU and ignition key as well at the same time.

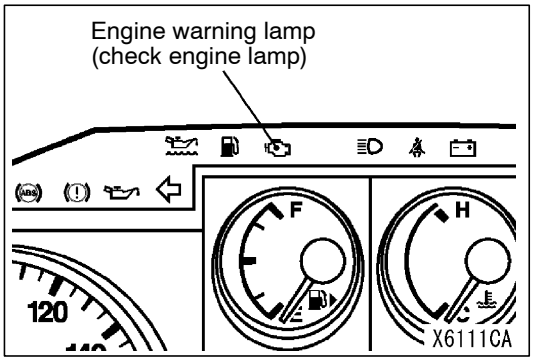


## DIAGNOSIS FUNCTION

### ENGINE WARNING LAMP (CHECK ENGINE LAMP)

Engine warning lamp is lit when any abnormality takes place in the item related to electronically controlled fuel injection system shown in the following table.
If the malfunction indicator lamp has been on and/or is lit when the engine is in operation, check the diagnosis output.

**Engine warning lamp check items**

| |
|---|
| Accelerator pedal position sensor (main) |
| Accelerator pedal position sensor (sub) |
| Boost pressure sensor (Boost sensor) |
| Crank angle sensor |
| Control sleeve position sensor |
| Timer piston position sensor |
| Throttle solenoid valve |
| GE actuator |
| Variable geometry control pressure sensor |
| Barometric pressure sensor |
| Timing control valve |
| Idle switch |
| Engine-ECU |

### METHOD OF ERASING AND ERASING DIAGNOSIS CODES

Refer to GROUP 00 - How to Use Troubleshooting/Inspection Service Points.

### INSPECTION USING MUT-II DATA LIST AND ACTUATOR TESTING

1. Carry out inspection by means of the data list and the actuator test function.
   If there is an abnormality, check and repair the chassis harnesses and components.
2. After repairing, re-check using MUT-II and check that the abnormal input and output have returned to normal as a result of the repairs.
3. Erase the diagnosis code memory.
4. Remove the MUT-II.
5. Start the engine again and carry out a road test to confirm that the problem has disappeared.

Purchased from www.WorkshopManuals.co.uk

www.WorkshopManuals.co.uk

## FAIL-SAFE, BACKUP FUNCTIONS

When abnormalities in the major sensors are detected by diagnosis functions, pre-set control logic operates to maintain a safe driving condition for the vehicle.

| Diagnosis item | Control features in malfunction |
|---|---|
| Accelerator pedal position sensor | ● Accelerator pedal released (idle switch ON)<br>Acceleration opening degree = 0 %<br>● Accelerator pedal applied (idle switch OFF)<br>Engine controlled at low speed<br>Acceleration opening degree = 30 % fixed<br>● Void EGR control |
| Idle switch | Void idling speed control. |
| Engine speed sensor | ● Engine controlled at low speed<br>● Void EGR control<br>● Void variable geometry turbocharger control |
| Boost air temperature sensor | ● Maintain the intake air temperature at 50°C.<br>● Void EGR control |
| Vehicle speed sensor | ● Void idling speed control.<br>● Void EGR control |
| Engine coolant temperature sensor | ● Maintain the engine coolant temperature at 80°C (However, the system assumes the coolant temperature as 0°C).<br>● Void EGR control |
| Control sleeve position sensor | ● Engine controlled at low speed<br>● Void EGR control<br>● Void variable geometry turbocharger control |
| Timer piston position sensor | ● Injection timing stabilizing control<br>● Void EGR control |
| Barometric pressure sensor (ECU built-in) | ● Keep the barometric pressure at 101 kPa.<br>● Void EGR control<br>● Void variable geometry turbocharger control |
| Fuel temperature sensor | Maintain the fuel temperature at 40°C. |
| Boost pressure sensor | ● Keep the boost pressure as barometric pressure (101 kPa).<br>● Void EGR control<br>● Void variable geometry turbocharger control |
| Injection volume adjusting ROM | Void correction. |
| GE actuator | ● Engine controlled at low speed<br>● Void EGR control<br>● Void variable geometry turbocharger control |
| Over boost | ● Void variable geometry turbocharger control<br>● Engine controlled at low fuel injection |
| Timing control valve | ● Injection timing stabilizing control<br>● Void EGR control |
| EGR valve position sensor | Void EGR control |
| Variable geometry control pressure sensor | ● Void EGR control<br>● Void variable geometry turbocharger control |

Purchased from www.WorkshopManuals.co.uk

www.WorkshopManuals.co.uk

## INSPECTION CHART FOR DIAGNOSIS CODES

| Code No. | Diagnosis item | Reference page |
|---|---|---|
| 11 | Accelerator pedal position sensor (main) system | 13E-9 |
| 12* | Boost pressure sensor system | 13E-10 |
| 13 | Barometric pressure sensor (ECU built-in) system | 13E-11 |
| 14 | Fuel temperature sensor system | 13E-11 |
| 15 | Engine coolant temperature sensor system | 13E-12 |
| 16 | Boost air temperature sensor system | 13E-12 |
| 17 | Vehicle speed sensor system | 13E-13 |
| 18 | Pump speed sensor system | 13E-14 |
| 21 | Crank angle sensor system | 13E-15 |
| 23 | Idle switch (accelerator pedal position sensor built-in) system | 13E-16 |
| 25* | Timer piston position sensor system | 13E-17 |
| 26* | Control sleeve position sensor system | 13E-18 |
| 27 | Accelerator pedal position sensor (sub) system | 13E-19 |
| 41* | Throttle solenoid valve system | 13E-20 |
| 43 | Timing control valve system | 13E-21 |
| 46 | Injection volume adjusting ROM system | 13E-22 |
| 48* | GE actuator (in the middle of control sleeve position sensor inoperative) system | 13E-23 |
| 49* | Over boost (variable geometry control pressure sensor system malfunction) | 13E-24 |
| 51 | EGR valve position sensor system | 13E-25 |
| 52 | Variable geometry control pressure sensor system | 13E-26 |
| 54 | Immobilizer system | 13E-27 |

**Caution**
**If the above-mentioned diagnosis code number with the asterisks can be displayed along with another code number in parentheses simultaneously, check the other code number before replacing the engine-ECU.**
**12 (41, 49), 26 (48), 25 (43), 41 (12, 49), 48 (26), 49 (12, 41)**

Purchased from www.WorkshopManuals.co.uk

www.WorkshopManuals.co.uk

## INSPECTION PROCEDURE FOR DIAGNOSIS CODE

| Code No. 11 Accelerator pedal position sensor (main) system | Probable cause |
|---|---|
| Range of Check<br>● Ignition switch: ON, accelerator pedal position sensor (sub) operative, except for during engine cranking<br>Set Conditions<br>● Accelerator pedal position sensor output voltage is as below for 1 second:<br>Sub side: 0.2 V or more, less than 2.5 V<br>Main side: 4.5 V or more<br>or<br>Sub or main side: less than 0.2 V<br>Range of Check<br>● Ignition switch: ON, except for during engine cranking<br>Set Conditions<br>● The output voltage of accelerator pedal position sensor (main and sub) for 0.2 second is 0.2 V or higher, or lower than 4.5 V and the difference in sensor output voltage between the main and sub is 1 V or higher, or idle switch: ON, and sensor main output voltage is 1.875 V or higher. | ● Accelerator pedal position sensor inoperative<br>● Accelerator pedal position sensor open circuit, short circuit, or connector contact inoperative<br>● Engine-ECU inoperative |

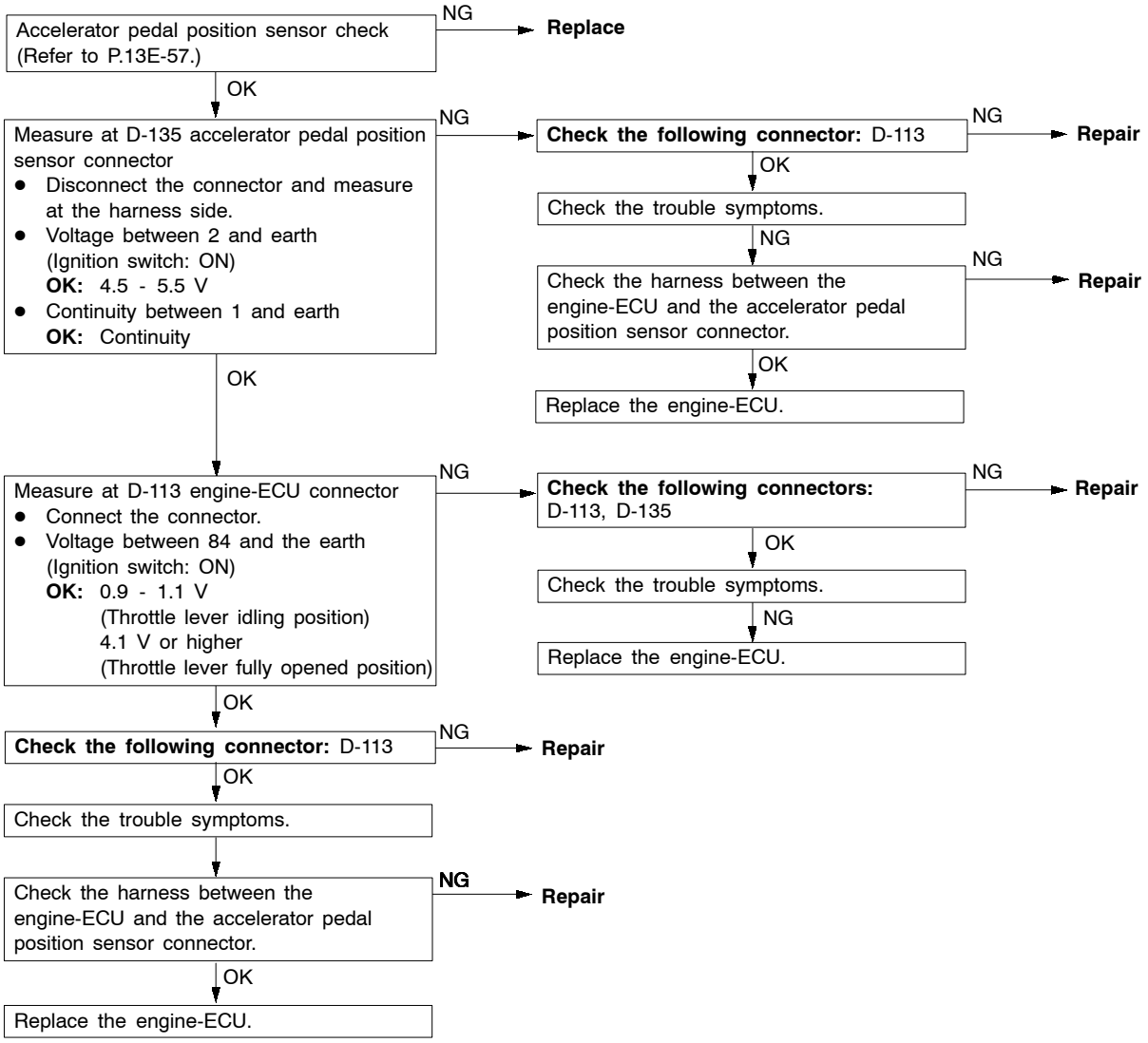


Purchased from www.WorkshopManuals.co.uk

www.WorkshopManuals.co.uk

| Code No. 12 Boost pressure sensor (boost sensor) system | Probable cause |
|---|---|
| Range of Check<br>● Ignition switch: ON, except for during engine cranking<br>Set Conditions<br>● Sensor output voltage for 1 second is 4.5 V or higher (boost pressure is approximately 267 kPa).<br>or<br>● Sensor output voltage for 1 second is 0.2 V or lower (boost pressure is approximately 51.7 kPa or lower)<br>Range of Check<br>● Engine speed is 2,000 r/min or higher, barometric pressure is 69.7 kPa or less (equivalent to an altitude of 300 m) and under high load.<br>Set Conditions<br>● Boost pressure is lower than the barometric pressure + 13 kPa for 3 seconds. | ● Boost pressure sensor inoperative<br>● Boost pressure sensor open circuit, short circuit, or connector contact inoperative<br>● Boost pressure sensor hose disconnected<br>● Engine-ECU inoperative |

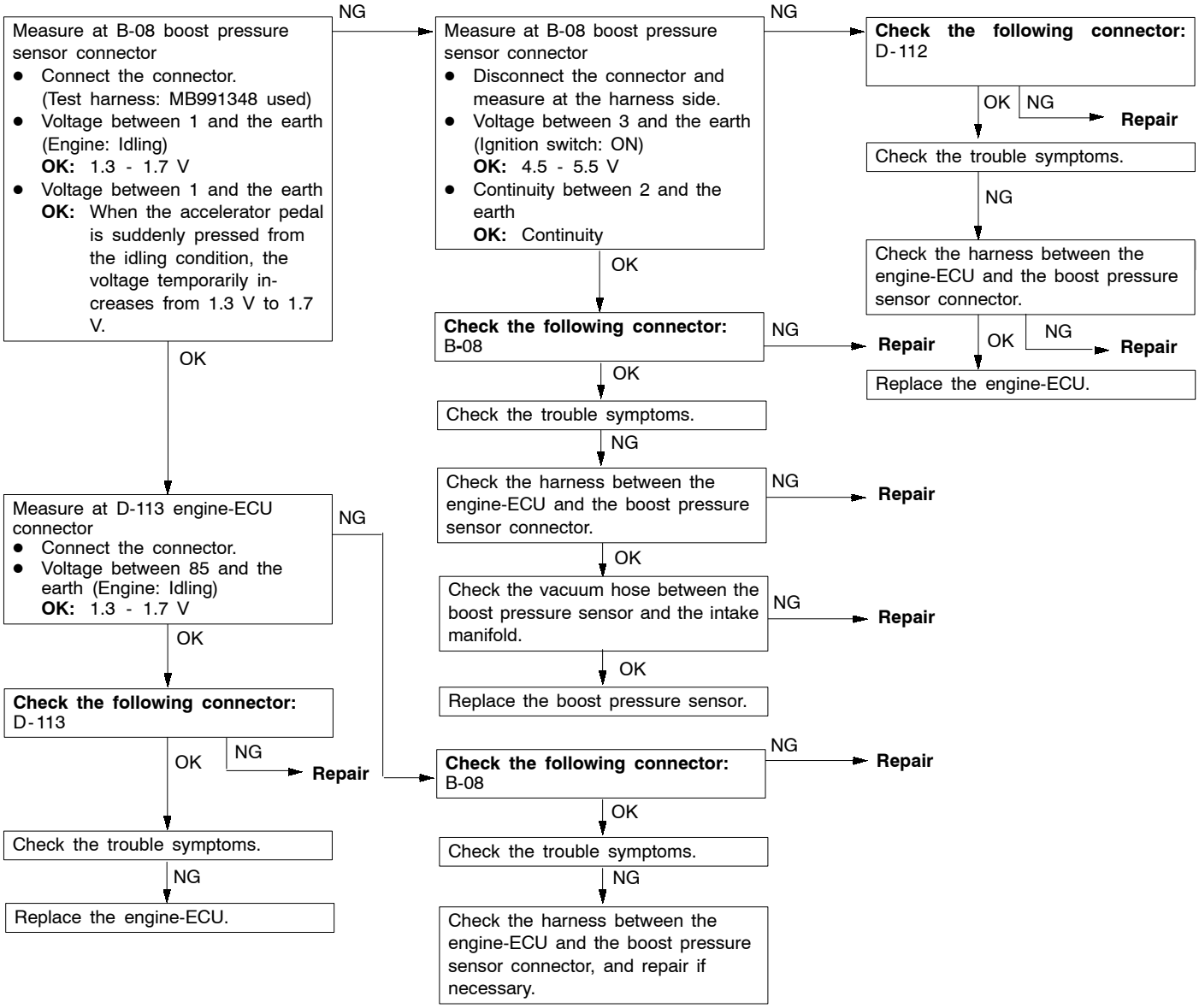


Purchased from www.WorkshopManuals.co.uk

www.WorkshopManuals.co.uk

| Code No. 13 Barometric pressure sensor system | Probable cause |
|---|---|
| Range of Check<br>● Ignition switch: ON, except for during engine cranking<br>Set Conditions<br>● The sensor output voltage is for 3 seconds is 4.5 V or higher (the barometric pressure is approximately 114 kPa or over).<br>or<br>● The sensor output voltage is for 3 seconds is 1.5 V or lower (the barometric pressure is approximately 40 kPa or under).<br>Range of Check<br>● Ignition switch: ON<br>● The coolant temperature is 40°C or lower<br>Set conditions<br>● Difference between the barometric pressure and boost pressure sensors is 13.3 kPa or more | Engine-ECU inoperative |

Check the trouble symptoms. —NG→ Replace the engine-ECU.

| Code No. 14 Fuel temperature sensor system | Probable cause |
|---|---|
| Range of Check<br>● Ignition switch: ON, except for during engine cranking<br>Set Conditions<br>● The sensor output voltage for 3 seconds is 0.2 V or lower (the fuel temperature is approximately 125°C or higher).<br>or<br>● The sensor output voltage for 3 seconds is 4.6 V or higher (the fuel temperature is approximately -47°C or lower). | ● Fuel temperature sensor inoperative<br>● Fuel temperature sensor open circuit, short circuit, or connector contact inoperative<br>● Engine-ECU inoperative |

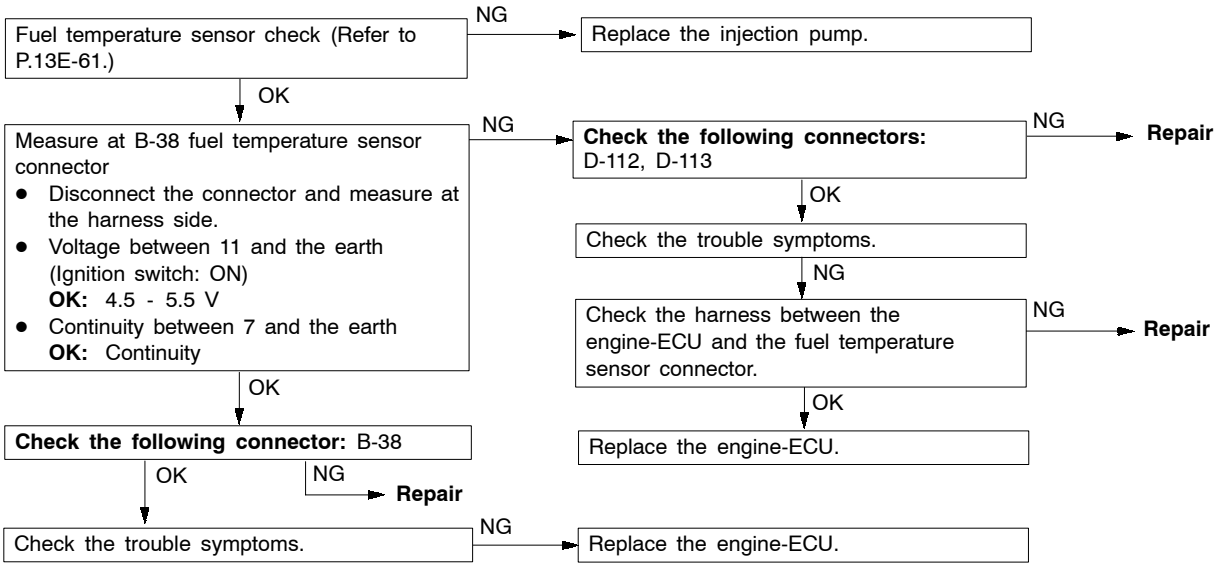


Purchased from www.WorkshopManuals.co.uk

www.WorkshopManuals.co.uk

| Code No. 15 Engine coolant temperature sensor system | Probable cause |
|---|---|
| Range of Check<br>● Ignition switch: ON, except for during engine cranking<br>Set Conditions<br>● The sensor output voltage for 3 seconds is 4.9 V or higher (the coolant temperature is approximately -45°C or lower).<br>or<br>● The sensor output voltage for 3 seconds is 0.2 V or lower (the coolant temperature is approximately 140°C or higher). | ● Engine coolant temperature sensor inoperative<br>● Engine coolant temperature sensor open circuit, short circuit, or connector contact inoperative<br>● Engine-ECU inoperative |

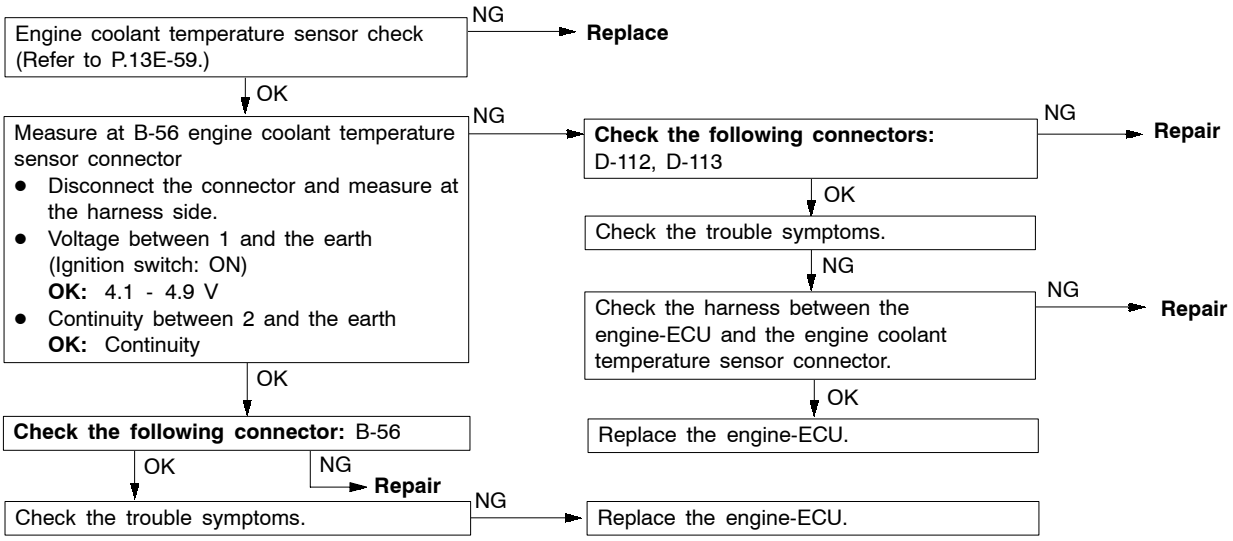


| Code No. 16 Boost air temperature sensor (intake air sensor) system | Probable cause |
|---|---|
| Range of Check<br>● Ignition switch: ON, except for during engine cranking<br>Set Conditions<br>● The sensor output voltage for 3 seconds is 4.6 V or higher (the intake air temperature is approximately -45°C or lower).<br>or<br>● The sensor output voltage for 3 seconds is 0.3 V or lower (the intake air temperature is approximately 110°C or higher). | ● Boost air temperature sensor inoperative<br>● Boost air temperature sensor open circuit, short circuit, or connector contact inoperative<br>● Engine-ECU inoperative |

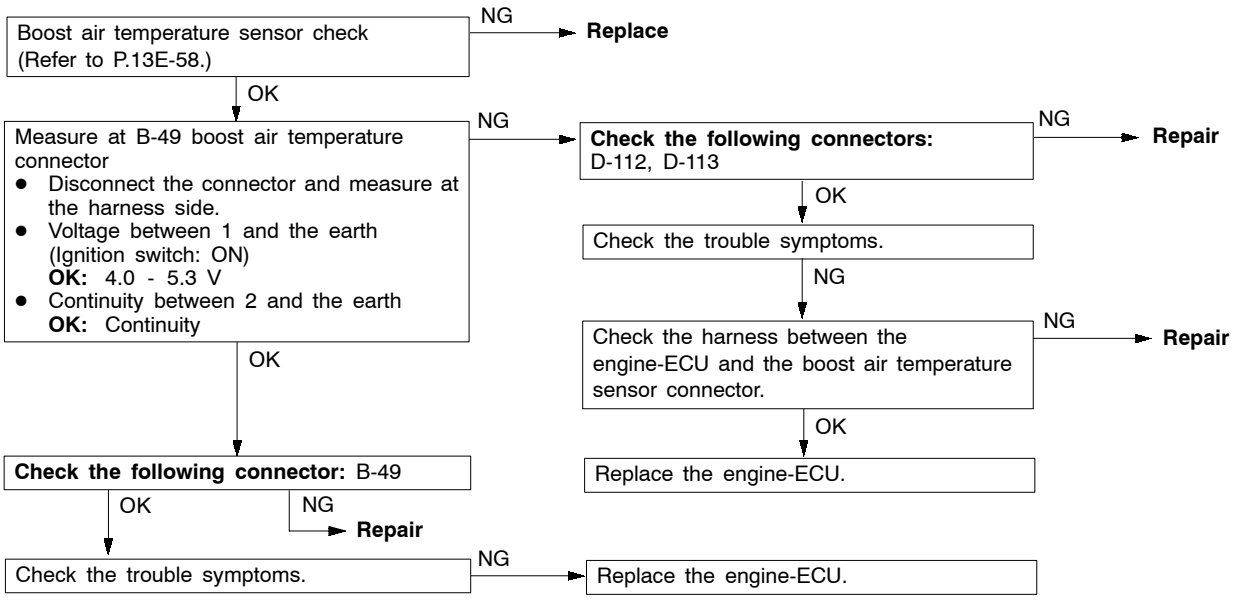


Purchased from www.WorkshopManuals.co.uk

www.WorkshopManuals.co.uk

| Code No. 17 Vehicle speed sensor system | Probable cause |
|---|---|
| Range of Check<br>● Ignition switch: ON<br>● Engine speed: 2,800 r/min or higher<br>● Driving with heavy load<br>Set Conditions<br>● Slower than vehicle speed of 3 km/h | ● Vehicle speed sensor inoperative<br>● Vehicle speed sensor open circuit, short circuit, or connector contact inoperative<br>● Engine-ECU inoperative |

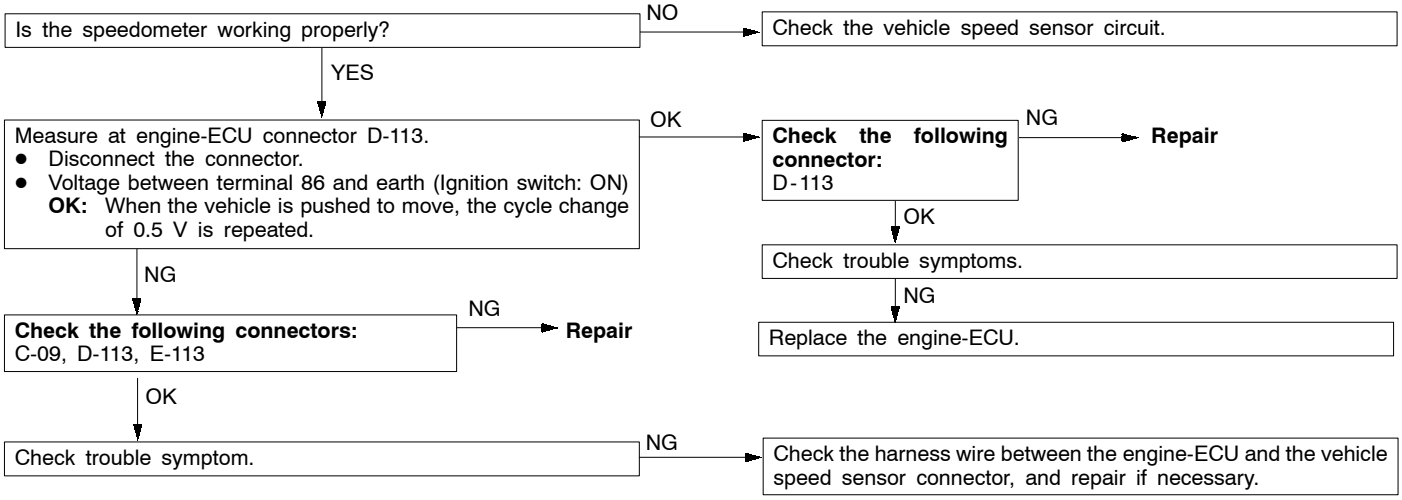


Purchased from www.WorkshopManuals.co.uk

www.WorkshopManuals.co.uk

| Code No. 18 Pump speed sensor system | Probable cause |
|---|---|
| Range of Check<br>● Ignition switch: ON<br>● Not during the engine cranking<br>Set Conditions<br>● The difference between the pump speed sensor and the crank angle sensor output value is 500 r/min or higher for 4 seconds | ● Malfunction of pump speed sensor<br>● Open circuit or short-circuit in pump speed sensor circuit, or poor sensor contact<br>● Engine-ECU inoperative |

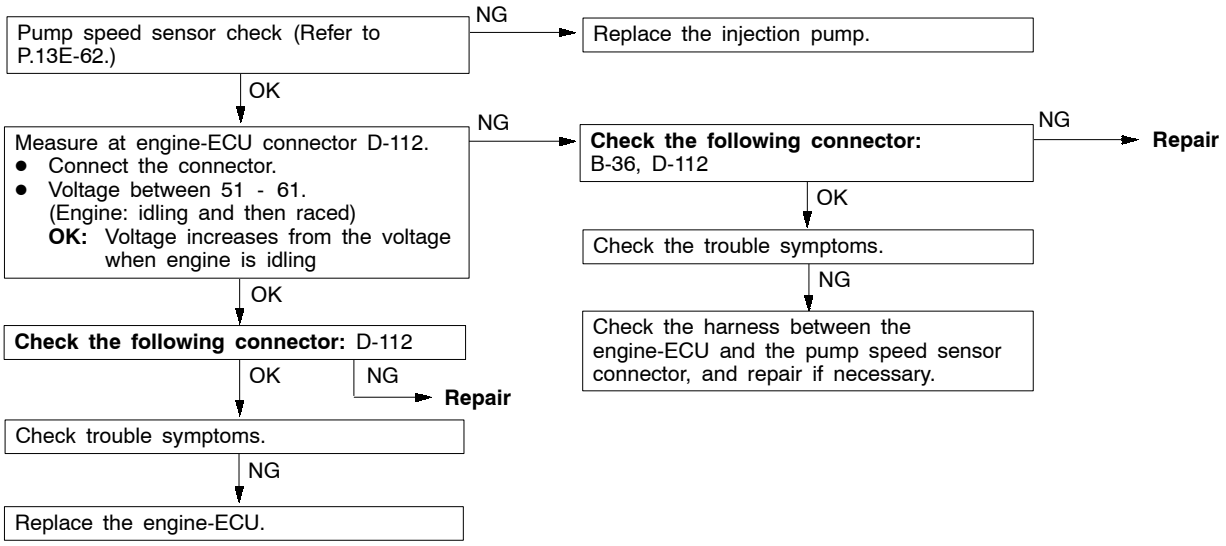


Purchased from www.WorkshopManuals.co.uk

www.WorkshopManuals.co.uk

| Code No. 21 Crank angle sensor system | Probable cause |
|---|---|
| Range of Check<br>● Engine cranking<br>Set Conditions<br>● Sensor output voltage does not change for 2 seconds (no pulse signal input) | ● Malfunction of crank angle sensor<br>● Open circuit or short-circuit in crank angle sensor circuit, or poor connector contact<br>● Engine-ECU inoperative |
| Range of Check<br>● Ignition switch: ON<br>● Not during the engine cranking<br>● Pump speed sensor circuit: Normal<br>Set Conditions<br>● When crank angle sensor signal is being input normally, suddenly no sensor signal is input for 0.3 seconds or more | |

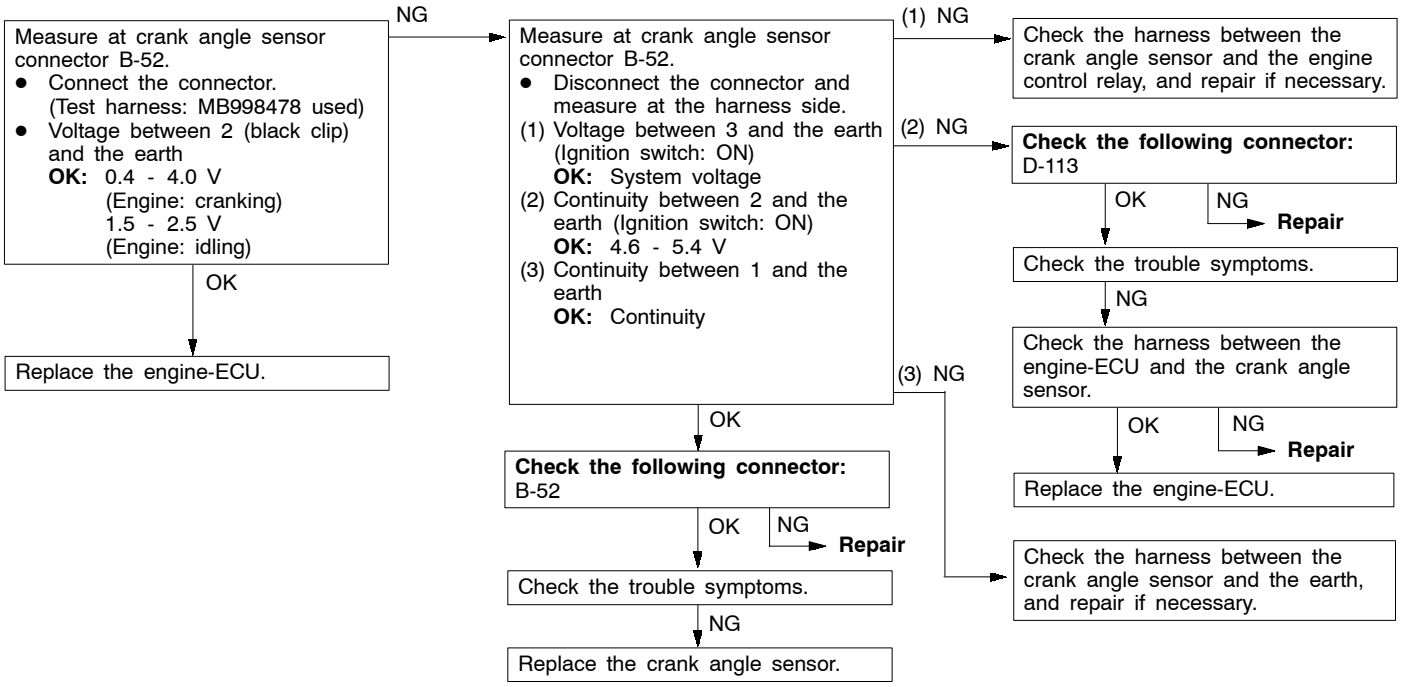


Purchased from www.WorkshopManuals.co.uk

www.WorkshopManuals.co.uk

| Code No. 23 Idle switch (accelerator pedal position sensor built-in) system | Probable cause |
|---|---|
| Range of Check<br>Ignition switch: ON, accelerator pedal position sensor (main, sub) operative, except for during engine cranking<br>Set Conditions<br>● Idle switch (built-in): ON for 0.8 second, accelerator pedal position sensor (main, sub) output voltage 1.875 V or higher<br>● Idle switch (built-in): OFF for 10 minutes, accelerator pedal position sensor (main, sub) opening degrees less than 1.17 % | ● Accelerator pedal position sensor inoperative<br>● Accelerator pedal position sensor open circuit, short circuit, or connector contact inoperative<br>● Idle switch "ON" inoperative<br>● Idle switch signal line short circuit<br>● Engine-ECU inoperative |

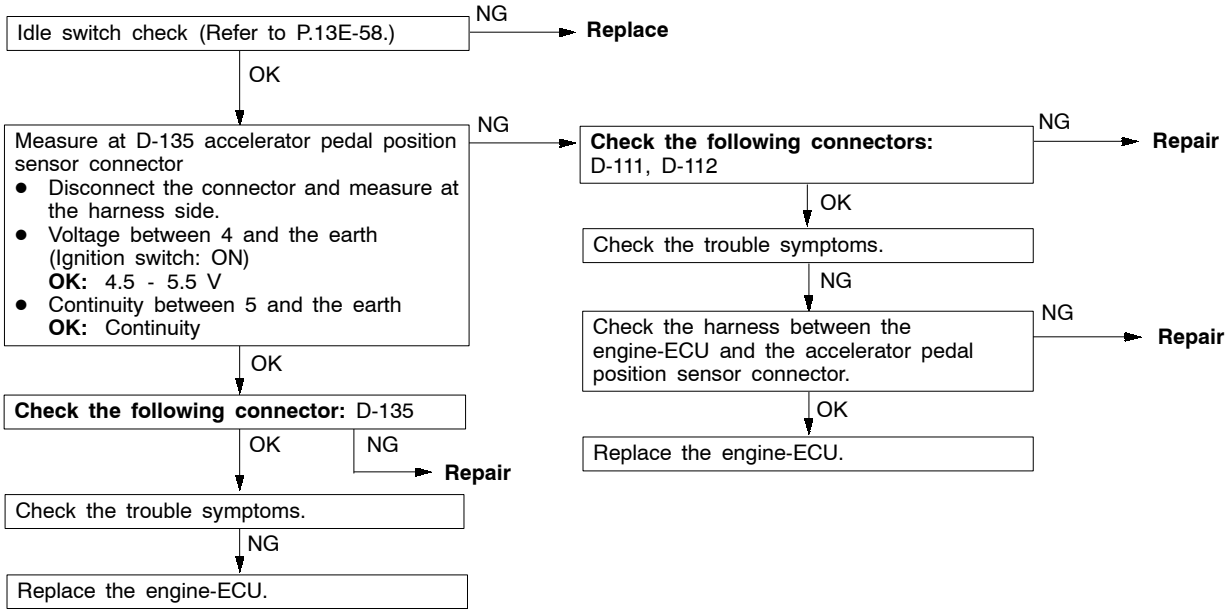


Purchased from www.WorkshopManuals.co.uk

www.WorkshopManuals.co.uk

| Code No. 25 Timer piston position sensor system | Probable cause |
|---|---|
| Range of Check<br>● Ignition switch: OK<br>● Not during the engine cranking<br>Set Conditions<br>● The sensor output voltage for 1 second is 4.9 V* or more<br>or<br>● The sensor output voltage for 1 second is 0.25 V* or less | ● Timer piston position sensor inoperative<br>● Timer piston position sensor open circuit, short circuit, or connector contact inoperative<br>● Engine-ECU inoperative |

NOTE:
*: This voltage is derived from the input pulse signal converted in the engine-ECU and cannot be measured.

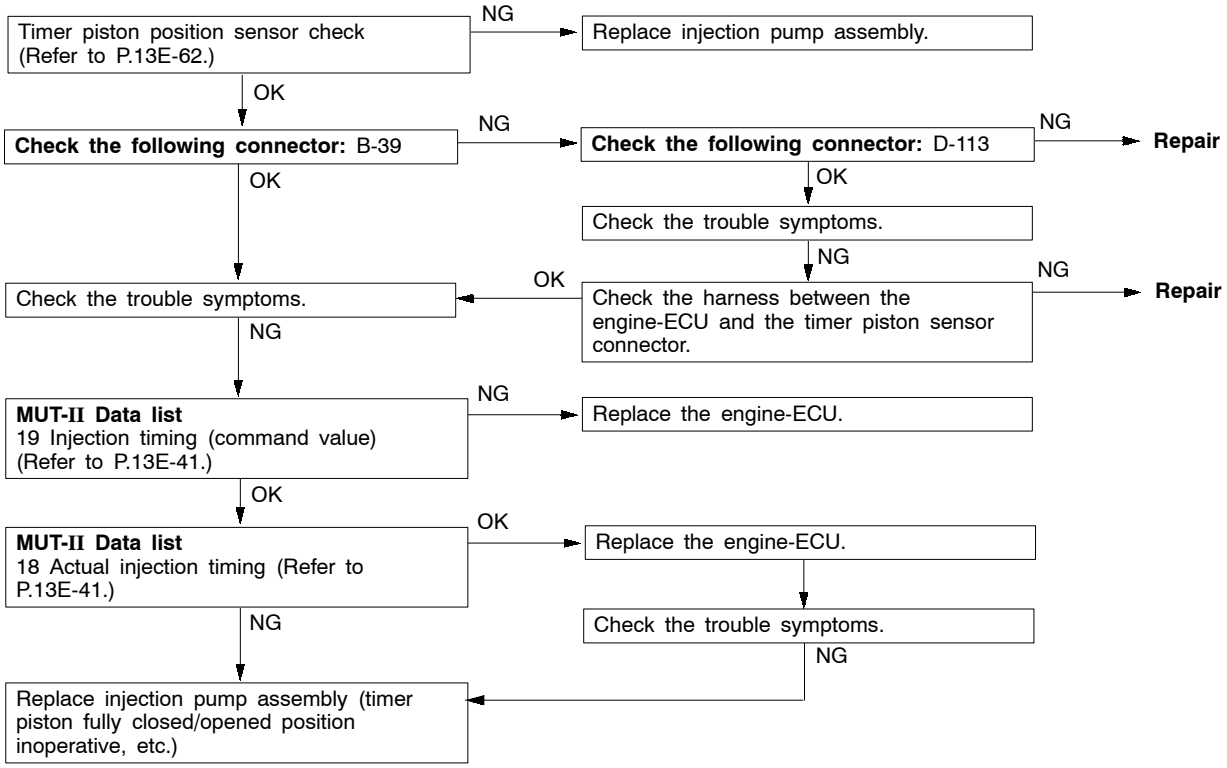


Purchased from www.WorkshopManuals.co.uk

www.WorkshopManuals.co.uk

| Code No. 26 Control sleeve position sensor system | Probable cause |
|---|---|
| Range of Check<br>● Ignition switch: ON<br>Set Conditions<br>● The sensor output voltage for 0.3 second is 4.5 V* or more<br>or<br>● The sensor output voltage for 0.3 second is 0.25 V* or less | ● Control sleeve position sensor inoperative<br>● Control sleeve position sensor open circuit, short circuit, or connector contact inoperative<br>● Engine-ECU inoperative |

NOTE:
*: This voltage is derived from the input pulse signal converted in the engine-ECU and cannot be measured.

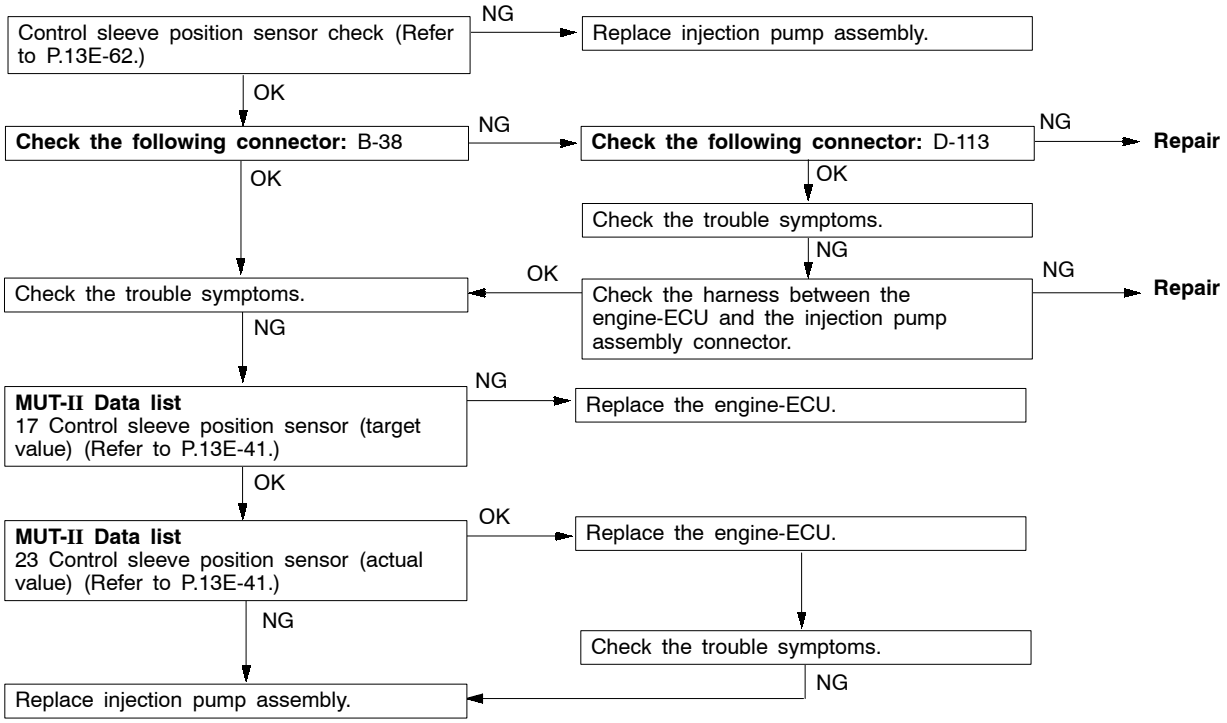


Purchased from www.WorkshopManuals.co.uk

www.WorkshopManuals.co.uk

| Code No. 27 Accelerator pedal position sensor (sub) system | Probable cause |
|---|---|
| Range of Check<br>● Ignition switch: ON, accelerator pedal position sensor (main) operative, except for during engine cranking<br>Set Conditions<br>● Accelerator pedal position sensor output voltage for 1 second<br>Sub side: 0.2 V or higher, lower than 2.5 V<br>Main side: 4.5 V or higher<br>or<br>Sub or main: Lower than 0.2 V<br>Range of Check<br>● Ignition switch: ON, except for during engine cranking<br>Set Conditions<br>● The difference in the output sensor voltage between the main and the sub sensor is 1 V or higher, or the idle switch ON, and sensor main output voltage is 1.875 V or higher. | ● Accelerator pedal position sensor inoperative<br>● Accelerator pedal position sensor open circuit, short circuit, or connector contact inoperative<br>● Engine-ECU inoperative |

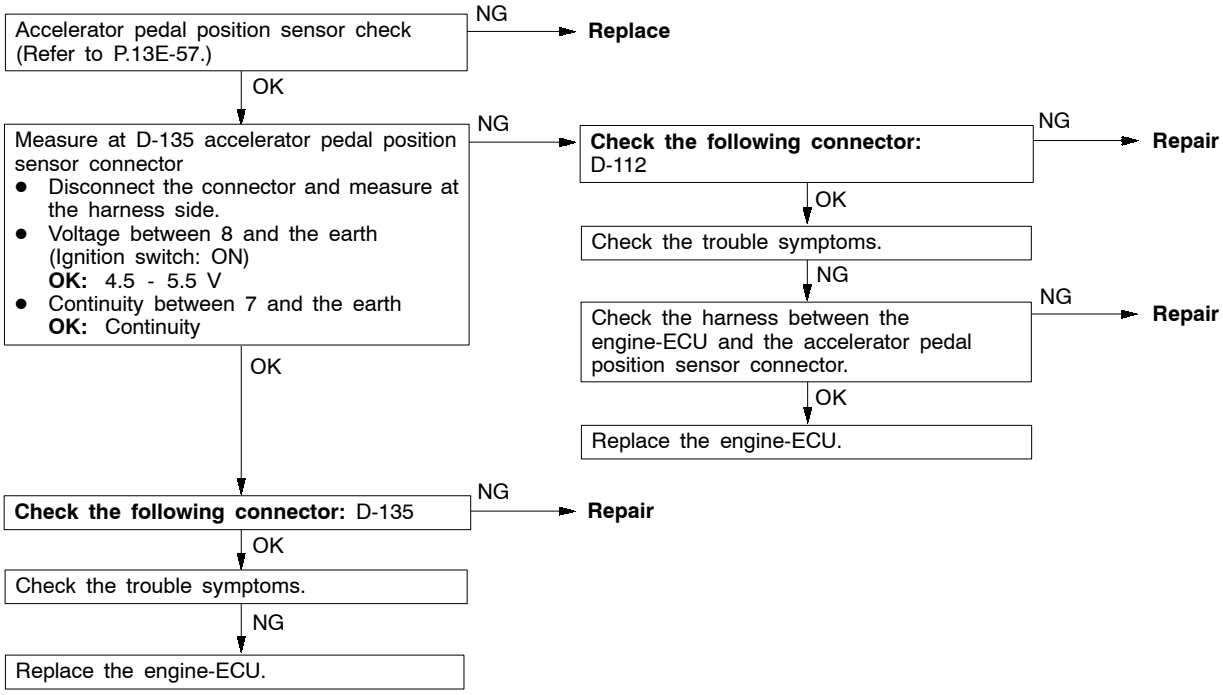


Purchased from www.WorkshopManuals.co.uk

www.WorkshopManuals.co.uk

| Code No. 41 Throttle solenoid valve system | Probable cause |
|---|---|
| Range of Check<br>● Ignition switch: OFF<br>● Barometric pressure is 95.4 kPa or over (equivalent to an altitude of 500 m).<br>Set Conditions<br>● Boost pressure sensor output does not change. | ● Throttle solenoid valve inoperative<br>● Throttle solenoid valve open circuit, short circuit, or connector contact inoperative<br>● Engine-ECU inoperative<br>● Malfunction of throttle actuator |

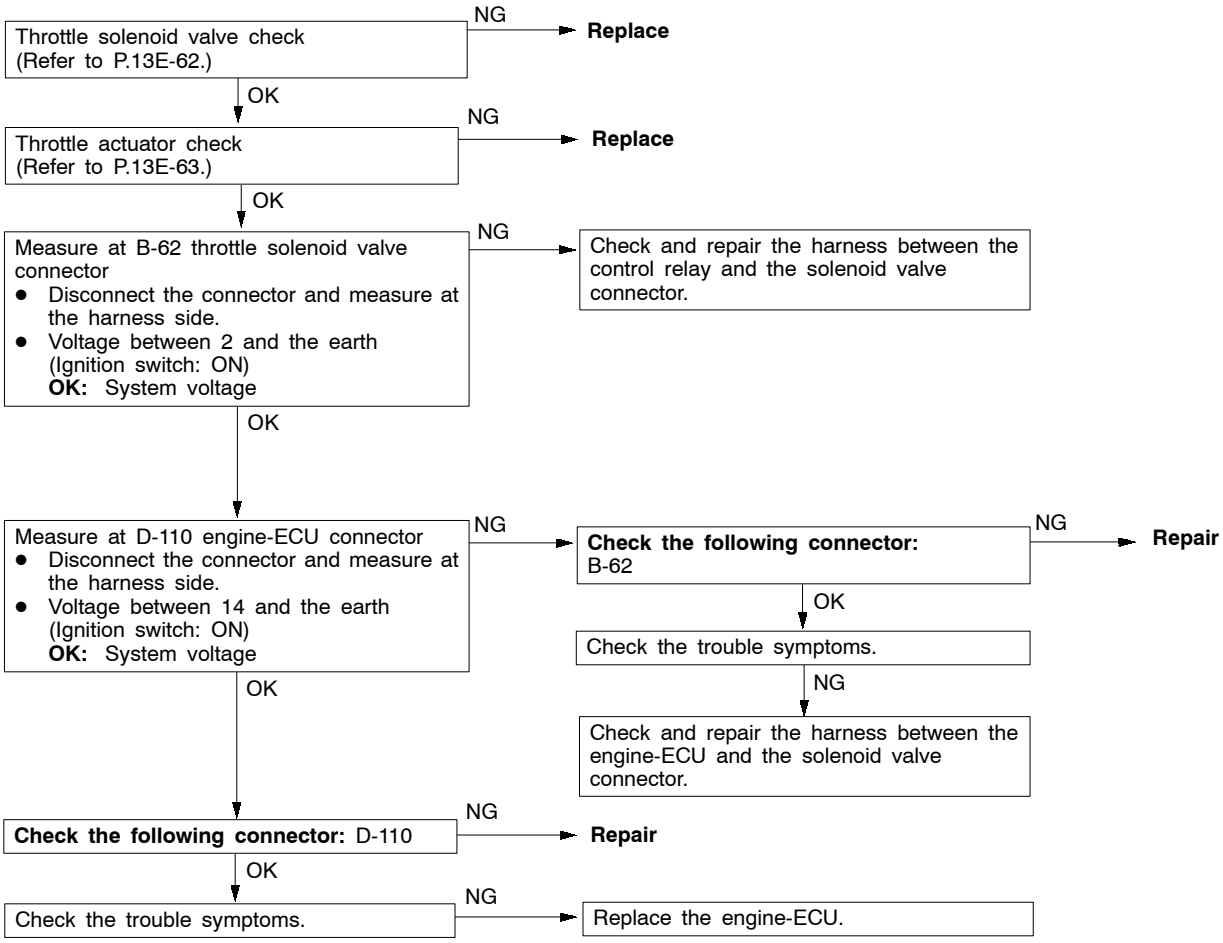


Purchased from www.WorkshopManuals.co.uk

www.WorkshopManuals.co.uk

| Code No. 43 Timing control valve system | Probable cause |
|---|---|
| Range of Check<br>● Engine coolant temperature 80°C or higher and the engine running<br>Set Conditions<br>● Target value minus actual value is 0.64 V or more for 5 seconds | ● Timing control valve inoperative<br>● Timing control valve open circuit, short circuit, or connector contact inoperative<br>● Engine-ECU inoperative<br>● Blockage in fuel system |

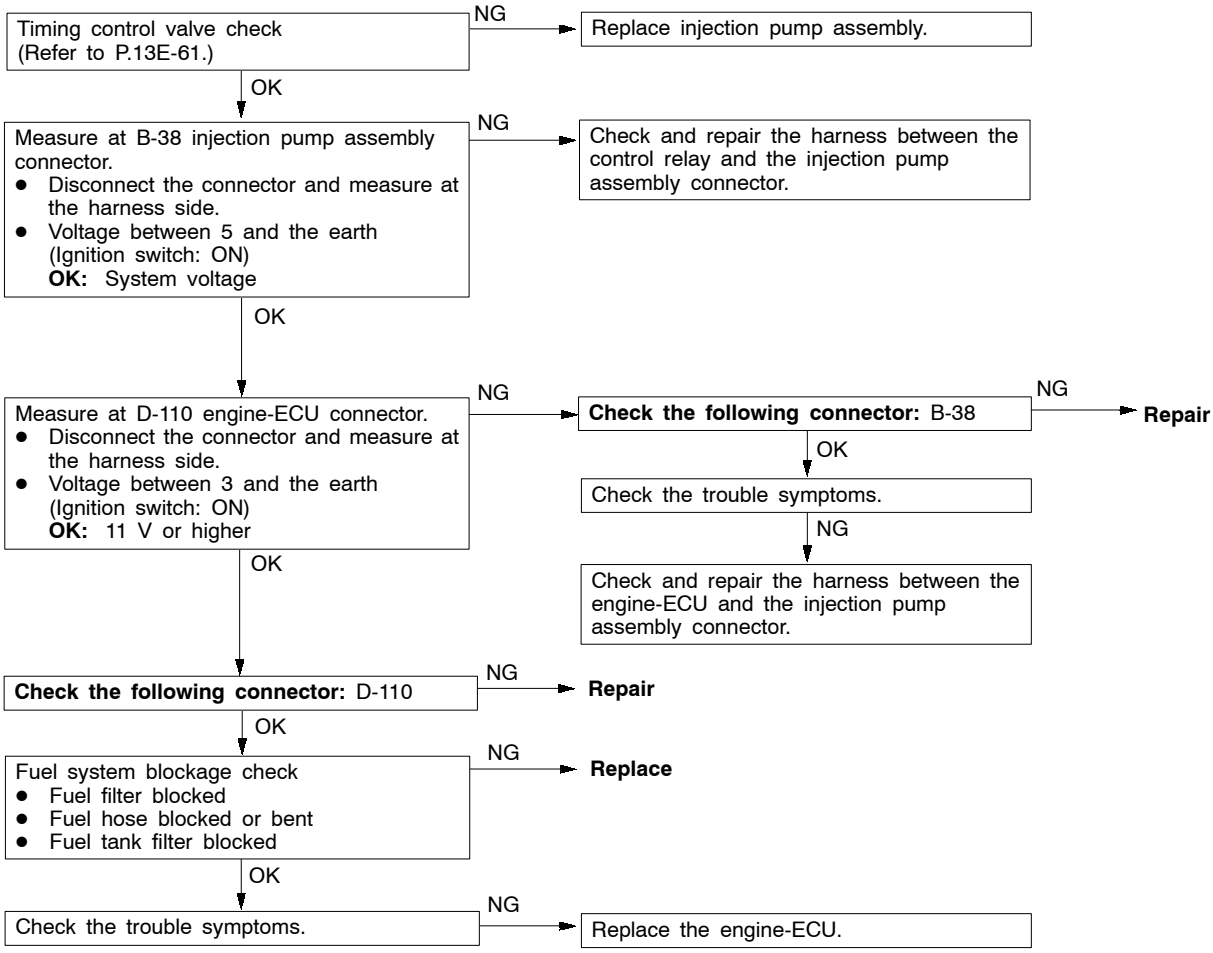


Purchased from www.WorkshopManuals.co.uk

www.WorkshopManuals.co.uk

| Code No. 46 Injection volume adjusting ROM system | Probable cause |
|---|---|
| Range of Check<br>● Ignition switch: ON<br>Set Conditions<br>● When communication fails | ● Injection volume adjusting ROM inoperative<br>● Engine-ECU inoperative |

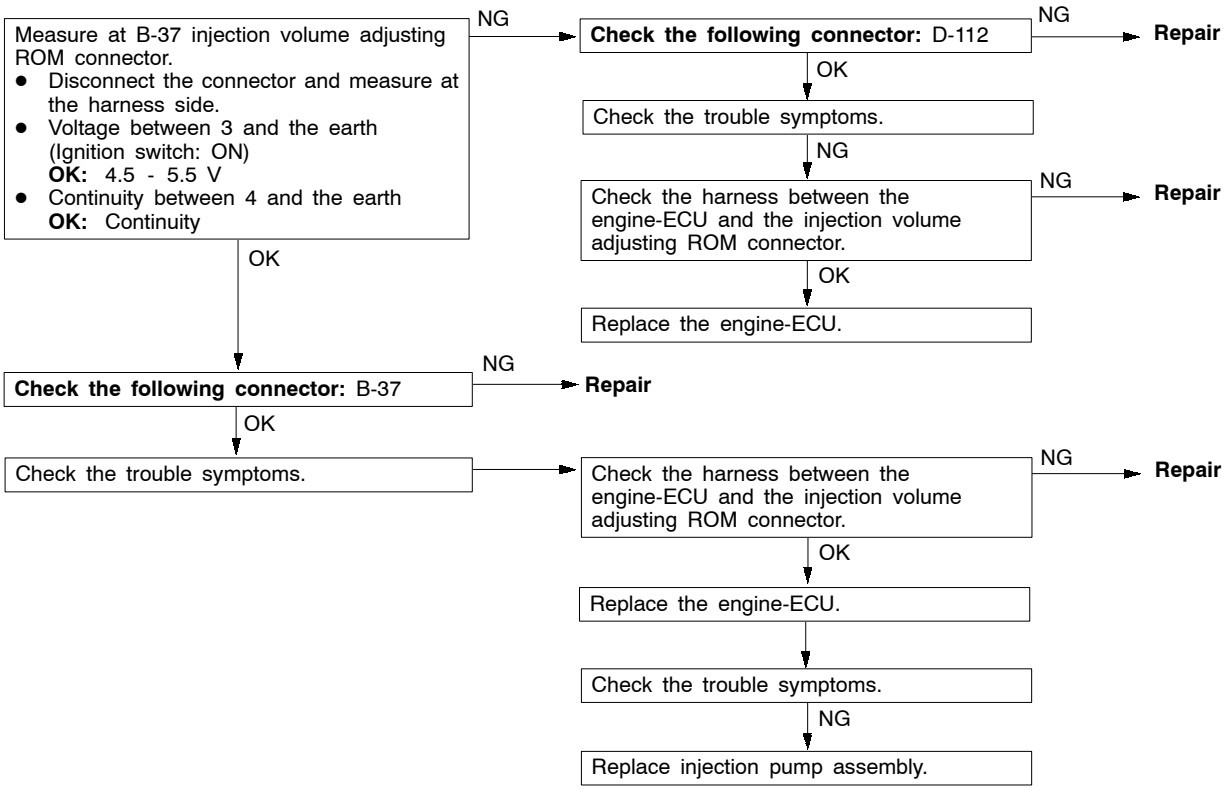


Purchased from www.WorkshopManuals.co.uk

www.WorkshopManuals.co.uk

| Code No. 48 GE actuator (in the middle of control sleeve position sensor inoperative) system | Probable cause |
|---|---|
| Range of Check<br>● Ignition switch: ON<br>Set Conditions<br>● Target value minus actual value is 1 V or more for 1 second | ● Control sleeve position sensor inoperative<br>● GE actuator inoperative<br>● Control sleeve position sensor open circuit, short circuit, or connector contact inoperative<br>● Engine-ECU inoperative |

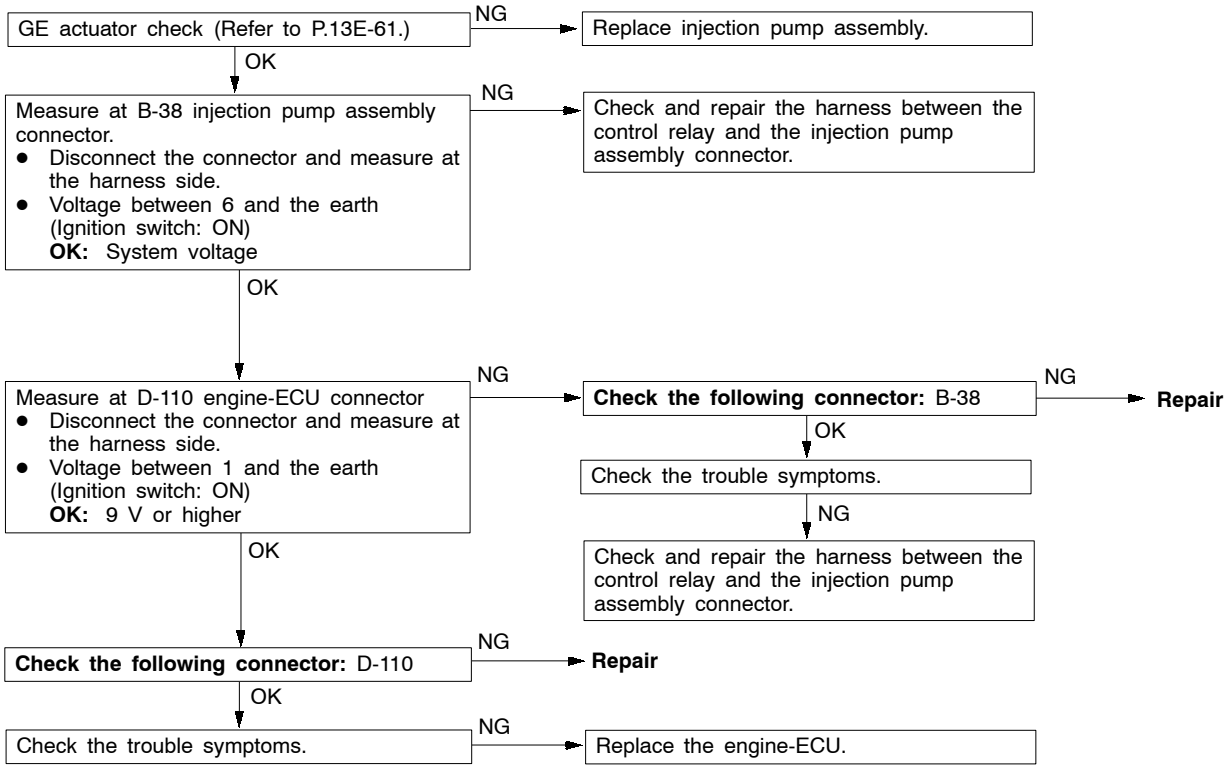


Purchased from www.WorkshopManuals.co.uk

www.WorkshopManuals.co.uk

| Code No. 49 Over boost | Probable cause |
|---|---|
| Range of Check<br>● Ignition switch: ON<br>Set Conditions<br>● Boost pressure is higher than the barometric pressure + 133 kPa | ● Malfunction of the variable geometry actuator<br>● Malfunction of variable geometry solenoid valve<br>● Variable geometry solenoid valve open circuit, short circuit, or connector contact inoperative<br>● Engine-ECU inoperative |

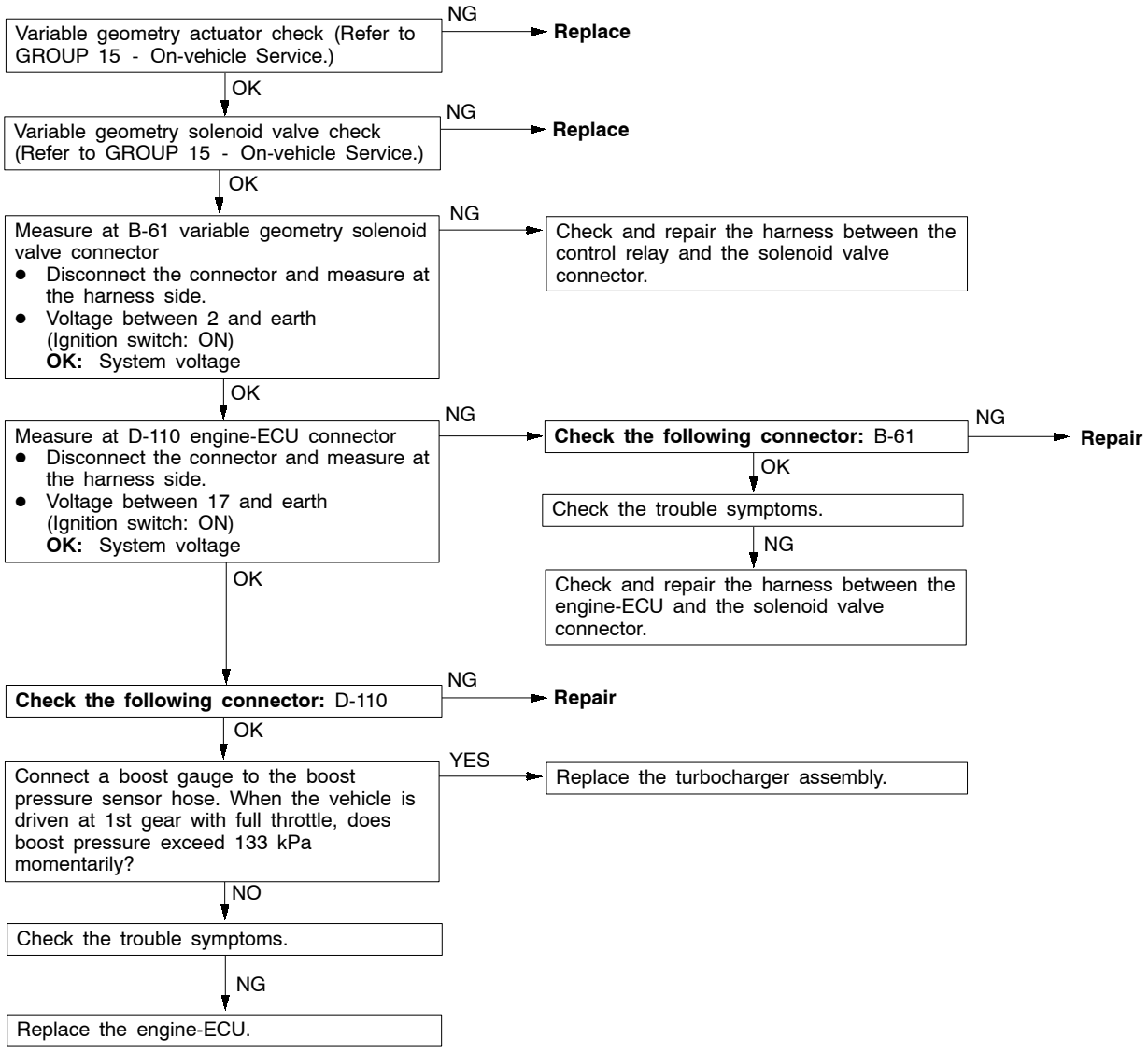


Purchased from www.WorkshopManuals.co.uk

www.WorkshopManuals.co.uk

| Code No. 51 EGR valve position sensor system | Probable cause |
|---|---|
| Range of Check<br>● Ignition switch: ON, except during engine cranking<br>Set Condition<br>● Output voltage of EGR valve position sensor for 3 seconds is 4.85 V or higher, or lower than 0.15 V | ● EGR valve position sensor inoperative<br>● EGR valve position sensor open circuit, short circuit or connector circuit inoperative<br>● Engine-ECU inoperative |

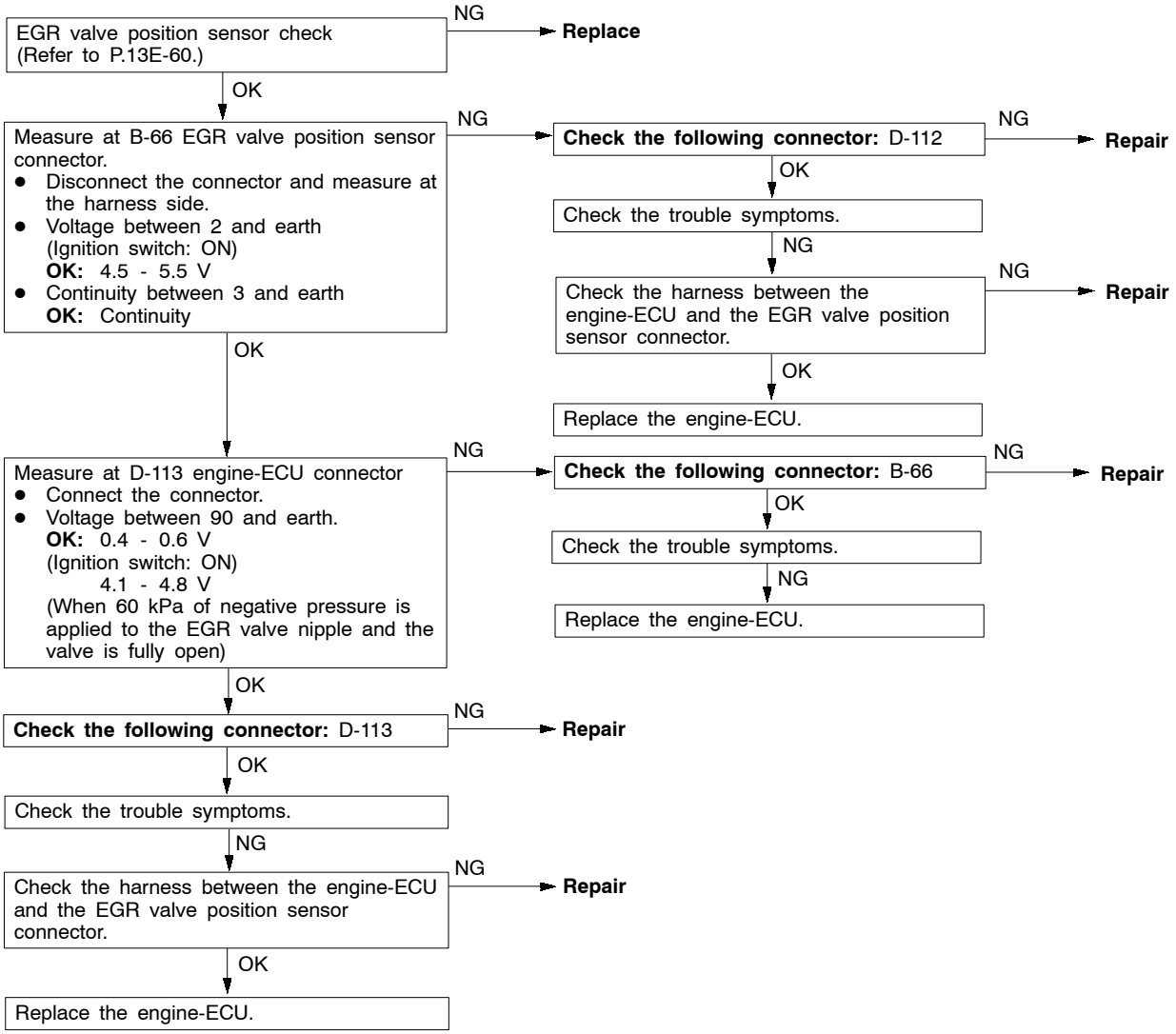


Purchased from www.WorkshopManuals.co.uk

www.WorkshopManuals.co.uk

| Code No. 52 Variable geometry control pressure sensor system | Probable cause |
|---|---|
| Range of Check<br>● Ignition switch: ON, except during engine cranking<br>Set Condition<br>● 4.5 V or higher, or 0.2 V or lower<br>Range of Check<br>● Engine idling<br>Set Conditions<br>● The difference between target and actual negative pressures remains 10.6 kPa or more for 10 seconds. | ● Variable geometry control pressure sensor inoperative<br>● Variable geometry control pressure sensor open circuit, short circuit or connector contact inoperative<br>● Vacuum hose disconnected or ruptured<br>● Engine-ECU inoperative |

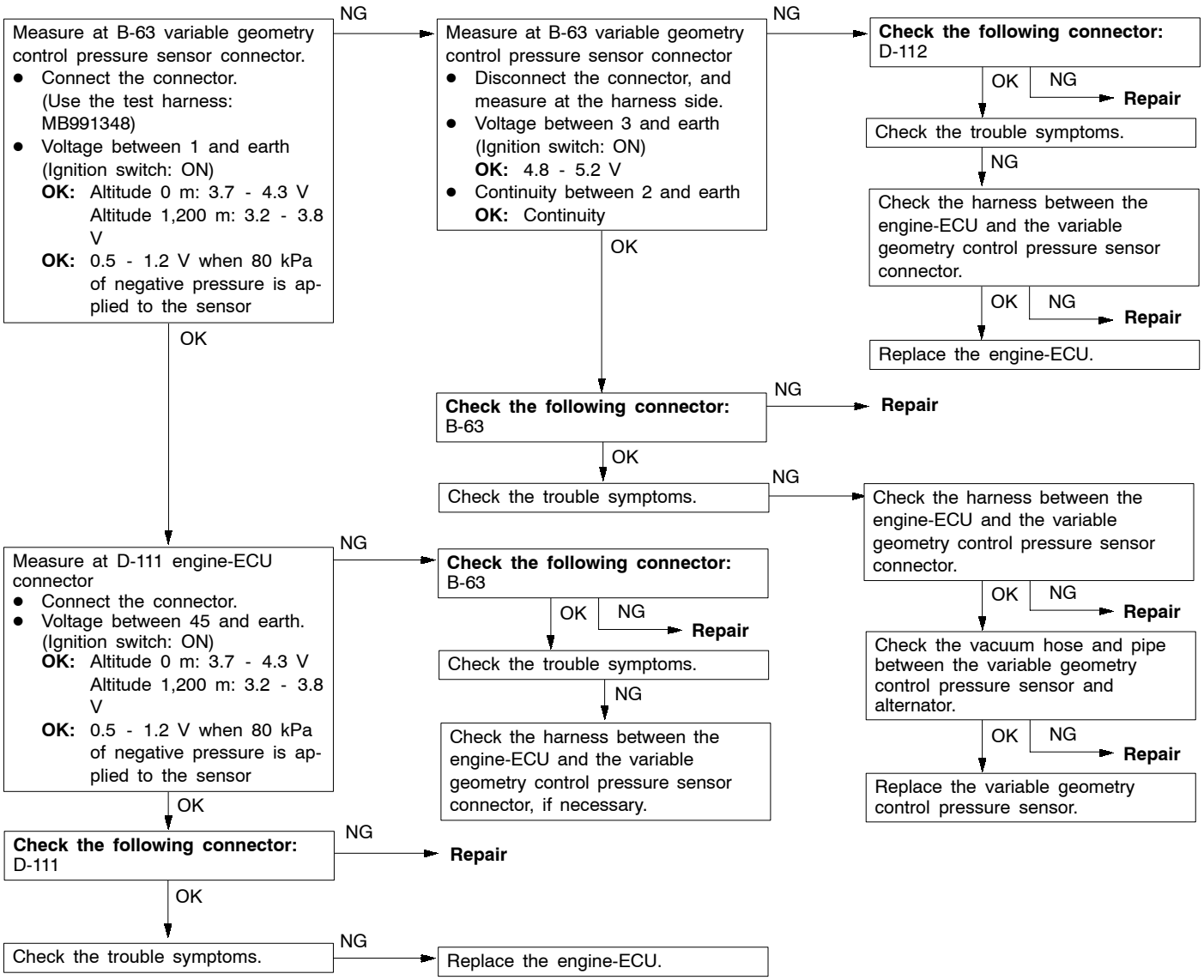


Purchased from www.WorkshopManuals.co.uk

www.WorkshopManuals.co.uk

| Code No. 54 Immobilizer system | Probable cause |
|---|---|
| Range of Check<br>● Ignition switch: ON<br>Set Conditions<br>● Improper communication between the engine-ECU and immobilizer-ECU | ● Radio interference of encrypted codes<br>● Incorrect encrypted code<br>● Malfunction of harness or connector<br>● Malfunction of immobilizer-ECU<br>● Engine-ECU inoperative |

NOTE
(1) If the ignition switches are close each other when starting the engine, radio interference may cause this code to be displayed.
(2) This code may be displayed when registering the key encrypted code.

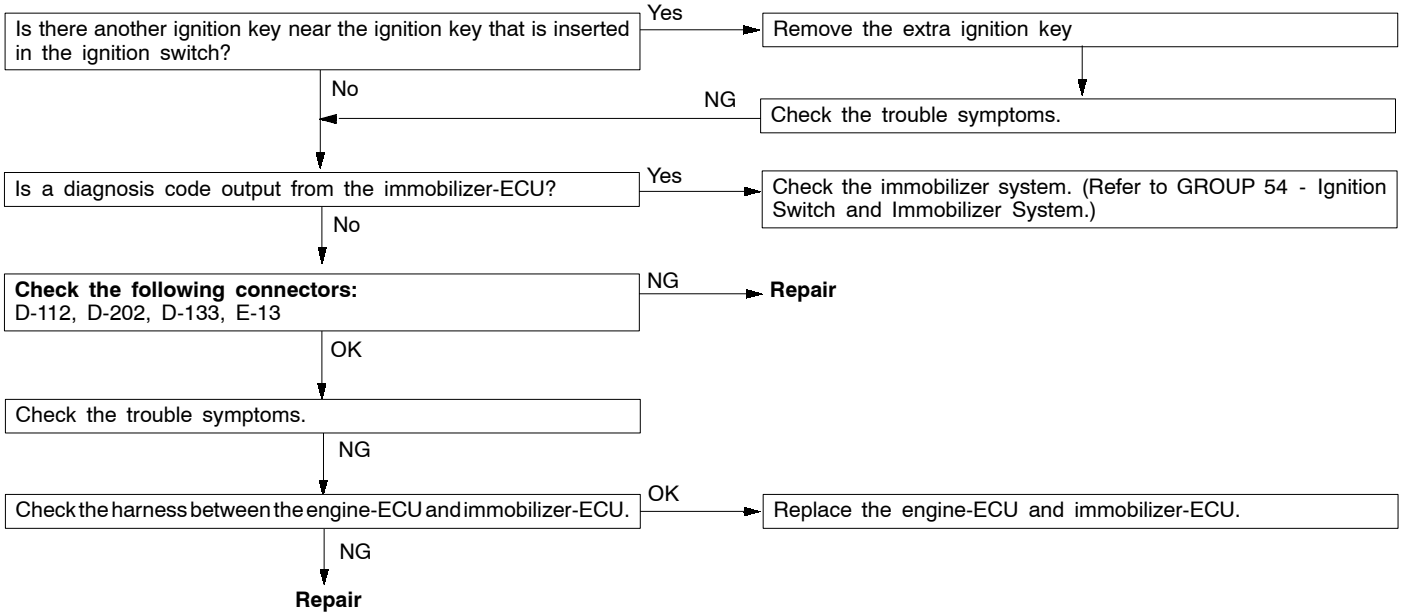


Purchased from www.WorkshopManuals.co.uk

www.WorkshopManuals.co.uk

## INSPECTION CHART FOR TROUBLE SYMPTOMS

| Trouble Symptom | | Inspection procedure No. | Reference page |
|---|---|---|---|
| No communication can be established between MUT-II and the engine-ECU. | No communication can be established with all systems. | 1 | 13E-29 |
| | No communication can be established only with the engine-ECU. | 2 | 13E-29 |
| Engine warning lamp related | Immediately after the ignition switch is “ON”, the engine warning lamp does not turn on. | 3 | 13E-30 |
| | The engine warning lamp keeps on and does not turn off. | 4 | 13E-30 |
| Starting performance | No initial combustion (unable to start) | 5 | 13E-31 |
| | Starting performance is bad when the engine is cold (difficult to start) | 6 | 13E-31 |
| | Starting performance is bad regardless of when the engine is hot or cold (difficult to start) | 7 | 13E-32 |
| Idling stability (idling inoperative) | Low idling speed when the engine is cold (improper idling speed) | 8 | 13E-32 |
| | High idling speed (improper idling speed) | 9 | 13E-32 |
| | Low idling speed (improper idling speed) | 10 | 13E-33 |
| | Idling instable (rough idling, hunting) | 11 | 13E-33 |
| Idling stability (idling sustainment inoperative) | The engine halts after running for a while. | 12 | 13E-33 |
| | The engine halts during idling. | 13 | 13E-34 |
| Driveability | Lack of output power | 14 | 13E-34 |
| | Occurrence of abnormal knocking | 15 | 13E-34 |
| | Abnormal black smoke | 16 | 13E-35 |
| | Abnormal white smoke | 17 | 13E-35 |
| | Hunting during driving | 18 | 13E-35 |
| A/C condenser fan malfunction | | 19 | 13E-36 |

Purchased from www.WorkshopManuals.co.uk

www.WorkshopManuals.co.uk

# INSPECTION PROCEDURES FOR TROUBLE SYMPTOMS

## INSPECTION PROCEDURE 1

| No communication can be established between MUT-II and all systems. | Probable cause |
|---|---|
| Probable cause can be found in troubles with the power supply circuit and the earth circuit to the diagnosis connector. | • Diagnosis connector inoperative<br>• Harness inoperative |

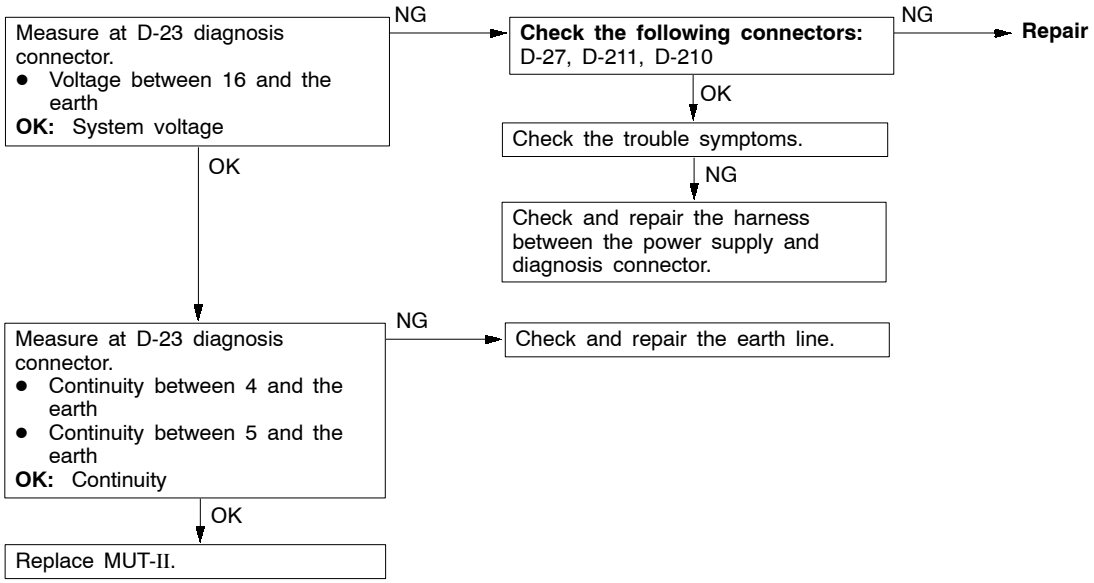


## INSPECTION PROCEDURE 2

| No communication can be established between MUT-II and the engine-ECU. | Probable cause |
|---|---|
| Probable causes are shown in the following:<br>• The power is not supplied to the engine-ECU.<br>• The earth circuit of the engine-ECU inoperative<br>• The engine-ECU inoperative<br>• Communication between the engine-ECU and MUT-II inoperative | • The power supply circuit of the engine-ECU inoperative<br>• Engine-ECU inoperative<br>• Open circuit at the harness between the engine-ECU and the diagnosis connector |

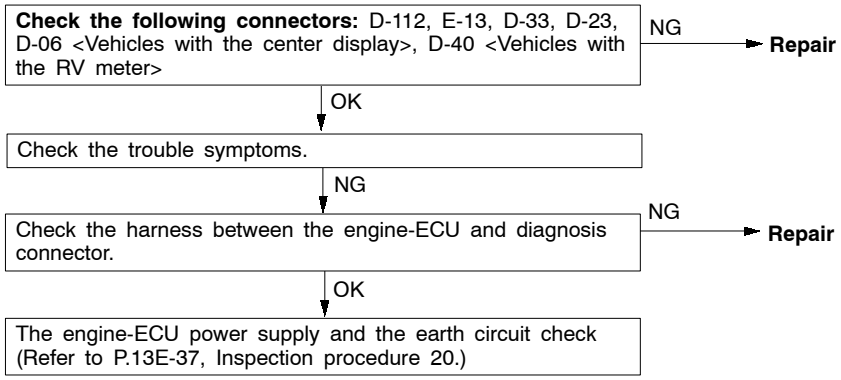


NOTE
If the trouble symptoms persist even after implementing the above - mentioned inspection procedure to the vehicle with center display, check the center display or the RV meter and replace it if necessary. (Refer to GROUP 54A - Clock or Center display.)

Purchased from www.WorkshopManuals.co.uk

www.WorkshopManuals.co.uk

## INSPECTION PROCEDURE 3

| Immediately after the ignition switch is "ON", the engine warning lamp does not turn on. | Probable cause |
|---|---|
| The engine-ECU turns on the engine warning lamp for 5 seconds immediately after turning on the ignition switch to check the bulb for being blown.<br>If the engine warning lamp does not turn on immediately after turning the ignition switch ON, problems shown in the right could exist. | • The engine warning lamp blown<br>• The engine warning lamp circuit inoperative<br>• Engine-ECU inoperative |

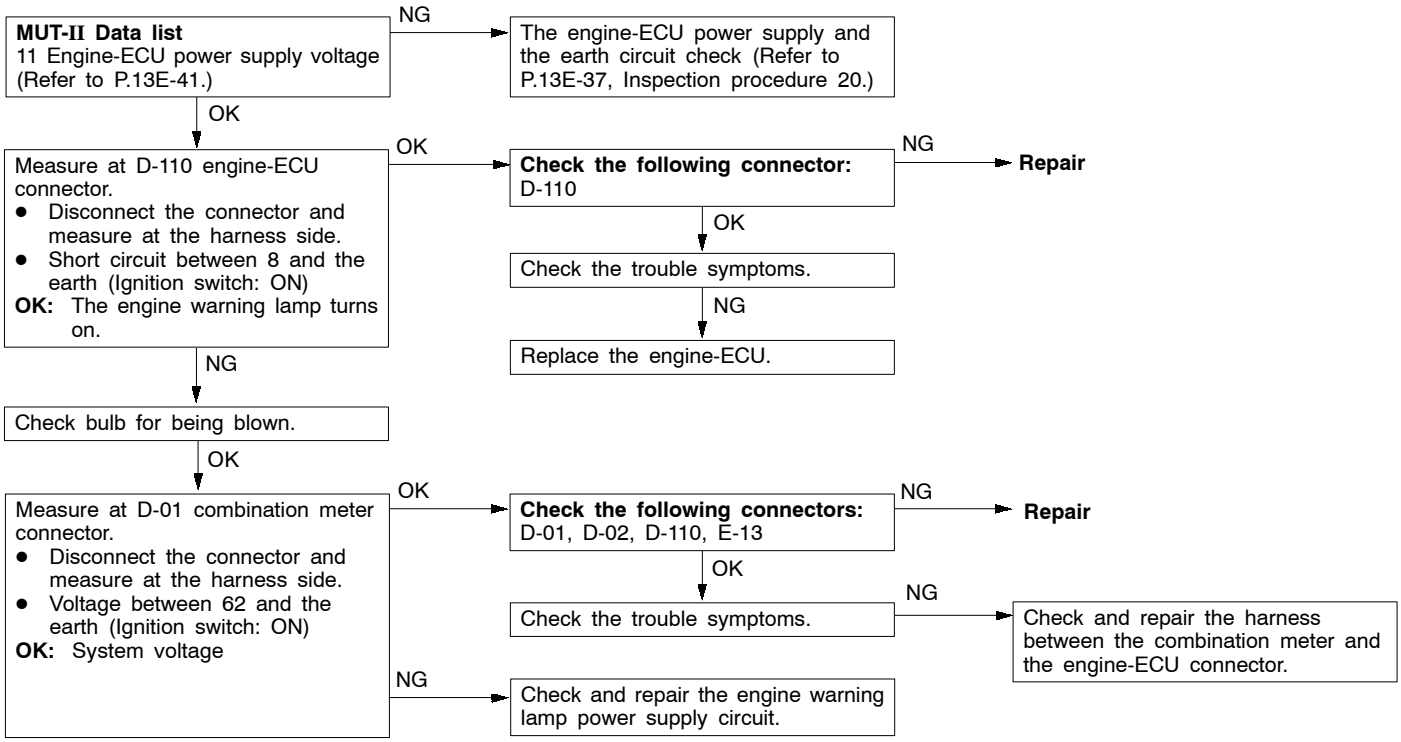


## INSPECTION PROCEDURE 4

| The engine warning lamp keeps on and does not turn off. | Probable cause |
|---|---|
| The probable causes can be found in either the engine-ECU detecting the malfunction in the sensor and/or the actuator, or the problem shown in the right takes place. | • Short circuit at the harness between the engine warning lamp and the engine-ECU<br>• Engine-ECU inoperative |

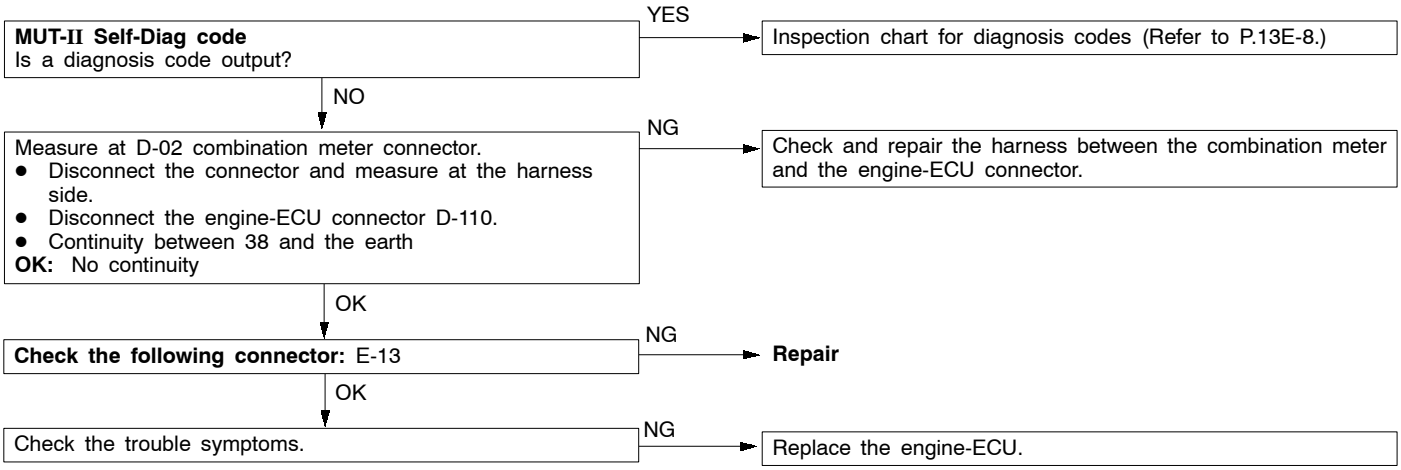


Purchased from www.WorkshopManuals.co.uk

www.WorkshopManuals.co.uk

## INSPECTION PROCEDURE 5

| No initial combustion (unable to start) | Probable cause |
|---|---|
| Probable causes can be found in troubles with control system, injection pump, glow system, and power supply system. | • Control system inoperative<br>• Injection pump inoperative<br>• Intake system inoperative<br>• Glow system inoperative<br>• Engine-ECU inoperative |

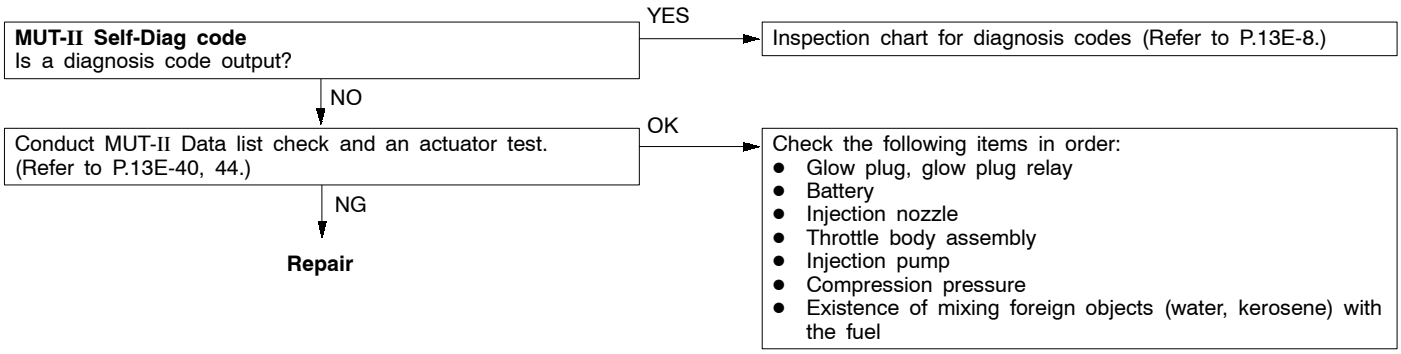


## INSPECTION PROCEDURE 6

| Starting performance is bad when the engine is cold (unable to start) | Probable cause |
|---|---|
| Probable causes can be found in troubles with control system, injection pump, fuel system, intake system, and glow system. | • Control system inoperative<br>• Injection pump inoperative<br>• Fuel system inoperative<br>• Intake system inoperative<br>• Glow system inoperative<br>• Engine-ECU inoperative |

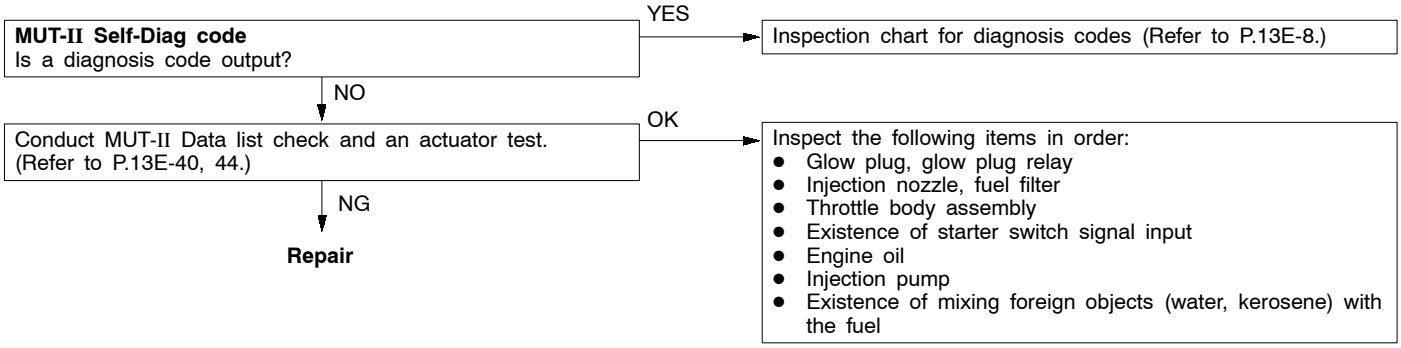


Purchased from www.WorkshopManuals.co.uk

www.WorkshopManuals.co.uk

## INSPECTION PROCEDURE 7

| Starting performance is bad regardless of whether the engine is hot or cold (unable to start) | Probable cause |
|---|---|
| Probable causes can be found in troubles with control system, injection pump, fuel system, and intake system. | • Control system inoperative<br>• Injection pump inoperative<br>• Fuel system inoperative<br>• Intake system inoperative<br>• Engine-ECU inoperative |

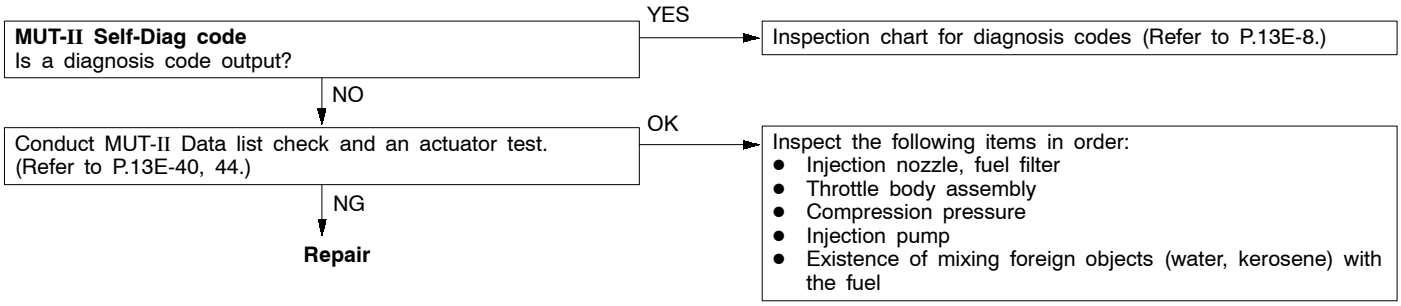


## INSPECTION PROCEDURE 8

| Low idling speed when the engine is cold (improper idling speed) | Probable cause |
|---|---|
| Probable causes can be found in troubles with control system, injection pump, and fuel system. | • Control system inoperative<br>• Injection pump inoperative<br>• Fuel system inoperative<br>• Engine-ECU inoperative |

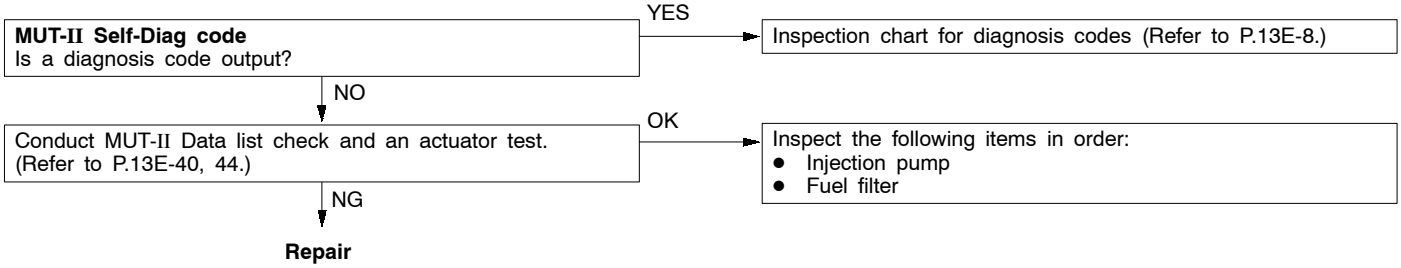


## INSPECTION PROCEDURE 9

| High idling speed (improper idling speed) | Probable cause |
|---|---|
| Probable causes can be found in troubles with control system and injection pump. | • Control system inoperative<br>• Injection pump inoperative<br>• Engine-ECU inoperative |

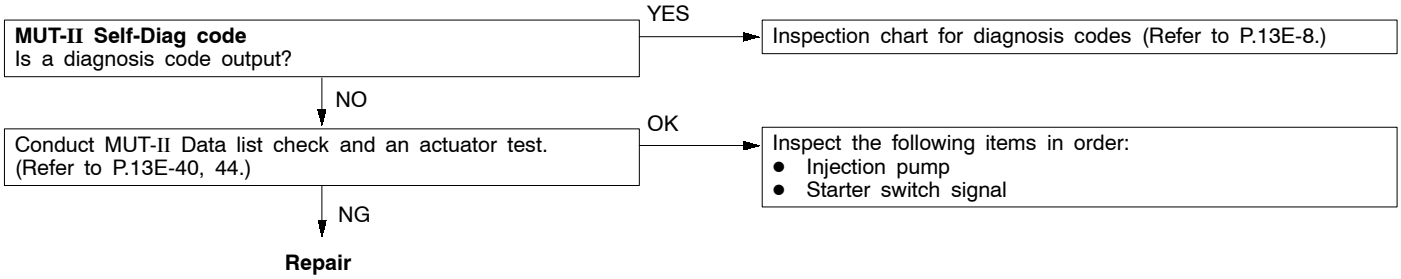


Purchased from www.WorkshopManuals.co.uk

www.WorkshopManuals.co.uk

## INSPECTION PROCEDURE 10

| Low idling speed (improper idling speed) | Probable cause |
|---|---|
| Probable causes can be found in troubles with control system, injection pump, and fuel. | • Control system inoperative<br>• Injection pump inoperative<br>• Fuel system inoperative<br>• Engine-ECU inoperative |

**MUT-II Self-Diag code**
Is a diagnosis code output?
- YES → Inspection chart for diagnosis codes (Refer to P.13E-8.)
- NO ↓

Conduct MUT-II Data list check and an actuator test.
(Refer to P.13E-40, 44.)
- OK → Inspect the following items in order:
  - Injection nozzle
  - Injection pump
- NG ↓

**Repair**

## INSPECTION PROCEDURE 11

| Idling instable (rough idling, hunting) | Probable cause |
|---|---|
| Probable causes can be found in troubles with control system, injection pump, fuel system, glow system, intake system, and EGR system. | • Control system inoperative<br>• Injection pump inoperative<br>• Fuel system inoperative<br>• Intake system inoperative<br>• Glow system inoperative<br>• EGR system inoperative<br>• Engine-ECU inoperative |

**MUT-II Self-Diag code**
Is a diagnosis code output?
- YES → Inspection chart for diagnosis codes (Refer to P.13E-8.)
- NO ↓

Conduct MUT-II Data list check and an actuator test.
(Refer to P.13E-40, 44.)
- OK → Inspect the following items in order:
  - Glow plug, glow plug relay
  - EGR system
  - Injection nozzle
  - Compression pressure
  - Valve clearance
  - Throttle body assembly
  - Injection timing
  - Fuel line bleeding
  - Injection pump
- NG ↓

**Repair**

## INSPECTION PROCEDURE 12

| The engine stalls after running for a while. | Probable cause |
|---|---|
| Probable causes can be found in troubles with control system, injection pump, fuel system, and intake system. | • Control system inoperative<br>• Injection pump inoperative<br>• Fuel system inoperative<br>• Intake system inoperative<br>• Engine-ECU inoperative |

**MUT-II Self-Diag code**
Is a diagnosis code output?
- YES → Inspection chart for diagnosis codes (Refer to P.13E-8.)
- NO ↓

Conduct MUT-II Data list check and an actuator test.
(Refer to P.13E-40, 44.)
- OK → Inspect the following items in order:
  - Throttle body assembly
  - Fuel filter
  - Injection pump
- NG ↓

**Repair**

Purchased from www.WorkshopManuals.co.uk

www.WorkshopManuals.co.uk

## INSPECTION PROCEDURE 13

| The engine stalls during idling. | Probable cause |
|---|---|
| Probable causes can be found in troubles with control system, injection pump, intake system, EGR system, and power supply. | • Control system inoperative<br>• Injection pump inoperative<br>• Fuel system inoperative<br>• Intake system inoperative<br>• EGR system inoperative<br>• Engine-ECU inoperative |

**MUT-II Self-Diag code**
Is a diagnosis code output?
- YES → Inspection chart for diagnosis codes (Refer to P.13E-8.)
- NO ↓

Conduct MUT-II Data list check and an actuator test.
(Refer to P.13E-40, 44.)
- OK → Inspect the following items in order:
  - Power supply system
  - Throttle body assembly
  - EGR system
  - Injection pump
- NG ↓ **Repair**

## INSPECTION PROCEDURE 14

| Lack of output power | Probable cause |
|---|---|
| Probable causes can be found in troubles with control system, injection pump, fuel system, intake system, and EGR system. | • Control system inoperative<br>• Injection pump inoperative<br>• Fuel system inoperative<br>• Intake system inoperative<br>• EGR system inoperative<br>• Engine-ECU inoperative |

**MUT-II Self-Diag code**
Is a diagnosis code output?
- YES → Inspection chart for diagnosis codes (Refer to P.13E-8.)
- NO ↓

Conduct MUT-II Data list check and an actuator test.
(Refer to P.13E-40, 44.)
- OK → Inspect the following items in order:
  - Injection nozzle, fuel filter
  - Throttle body assembly
  - EGR system
  - Turbocharger
  - Compression pressure
  - Injection timing
  - Injection pump
  - Existence of mixing foreign objects (water, kerosene) with the fuel
- NG ↓ **Repair**

## INSPECTION PROCEDURE 15

| Occurrence of abnormal knocking | Probable cause |
|---|---|
| Probable causes can be found in troubles with control system, injection pump, fuel system, and EGR system. | • Control system inoperative<br>• Injection pump inoperative<br>• Fuel system inoperative<br>• EGR system inoperative<br>• Engine-ECU inoperative |

**MUT-II Self-Diag code**
Is a diagnosis code output?
- YES → Inspection chart for diagnosis codes (Refer to P.13E-8.)
- NO ↓

Conduct MUT-II Data list check and an actuator test.
(Refer to P.13E-40, 44.)
- OK → Inspect the following items in order:
  - Injection nozzle
  - Injection timing
  - EGR system
  - Injection pump
- NG ↓ **Repair**

Purchased from www.WorkshopManuals.co.uk

www.WorkshopManuals.co.uk

## INSPECTION PROCEDURE 16

| Abnormal black smoke | Probable cause |
|---|---|
| Probable causes can be found in troubles with control system, injection pump, fuel system, intake system, and EGR system. | • Control system inoperative<br>• Injection pump inoperative<br>• Fuel system inoperative<br>• Intake system inoperative<br>• EGR system inoperative<br>• Engine-ECU inoperative |

**MUT-II Self-Diag code**
Is a diagnosis code output?
- YES → Inspection chart for diagnosis codes (Refer to P.13E-8.)
- NO ↓

Conduct MUT-II Data list check and an actuator test.
(Refer to P.13E-40, 44.)
- OK → Inspect the following items in order:
  - Air cleaner
  - Injection nozzle
  - Throttle body assembly
  - EGR system
  - Turbocharger
  - Injection pump
- NG ↓ **Repair**

## INSPECTION PROCEDURE 17

| Abnormal white smoke | Probable cause |
|---|---|
| Probable causes can be found in troubles with control system, injection pump, fuel system, intake system, EGR system, and glow system. | • Control system inoperative<br>• Injection pump inoperative<br>• Fuel system inoperative<br>• Intake system inoperative<br>• EGR system inoperative<br>• Glow system inoperative<br>• Engine-ECU inoperative |

**MUT-II Self-Diag code**
Is a diagnosis code output?
- YES → Inspection chart for diagnosis codes (Refer to P.13E-8.)
- NO ↓

Conduct MUT-II Data list check and an actuator test.
(Refer to P.13E-40, 44.)
- OK → Inspect the following items in order:
  - Glow plug, glow plug relay
  - Injection nozzle
  - Throttle body assembly
  - EGR system
  - Turbocharger
  - Injection pump
- NG ↓ **Repair**

## INSPECTION PROCEDURE 18

| Hunting during driving | Probable cause |
|---|---|
| Probable causes can be found in troubles with control system, injection pump, and fuel system. | • Control system inoperative<br>• Injection pump inoperative<br>• Fuel system inoperative<br>• Engine-ECU inoperative |

**MUT-II Self-Diag code**
Is a diagnosis code output?
- YES → Inspection chart for diagnosis codes (Refer to P.13E-8.)
- NO ↓

Conduct MUT-II Data list check and an actuator test.
(Refer to P.13E-40, 44.)
- OK → Inspect the following items in order:
  - Injection nozzle
  - Injection pump
- NG ↓ **Repair**

Purchased from www.WorkshopManuals.co.uk

www.WorkshopManuals.co.uk

## INSPECTION PROCEDURE 19

| A/C condenser fan operating problem | Probable cause |
|---|---|
| The power transistor inside the engine-ECU turns on and off to control the A/C condenser fan motor relay. | • Malfunction of A/C condenser fan motor relay<br>• Malfunction of A/C condenser fan motor<br>• Malfunction of thermostat<br>• Open circuit or short-circuit in circuit, or poor connector contact<br>• Malfunction of engine-ECU |

Measure at engine-ECU connector D-110.
- Disconnect the connector and measure at the harness side.
- Check the A/C condenser fan condition.
  (Ignition switch: ON)
  **OK:** Fan stopped
- Voltage between 7 and the earth
  (Ignition switch: ON)
  **OK:** System voltage
- Short out 7 and the earth
  (Ignition switch: ON)
  **OK:** A/C condenser fan turns

NG → A/C condenser fan motor circuit check (Refer to the wiring harness configuration diagram.)

OK ↓

**Check the following connector:** D-110

NG → **Repair**

OK ↓

Check the trouble symptoms.

NG ↓

Thermostat check

NG → **Replace**

OK ↓

**MUT-II Data list**
02 Engine coolant temperature sensor
**OK:** When engine is idling after having warmed up, the engine coolant temperature and the MUT-II display temperature are identical

NG → Engine coolant temperature sensor check (Refer to Code 15 on P.13E-59.)

OK ↓

Replace the engine-ECU.

Purchased from www.WorkshopManuals.co.uk

www.WorkshopManuals.co.uk

## INSPECTION PROCEDURE 20

### Engine-ECU power supply and earth circuit check

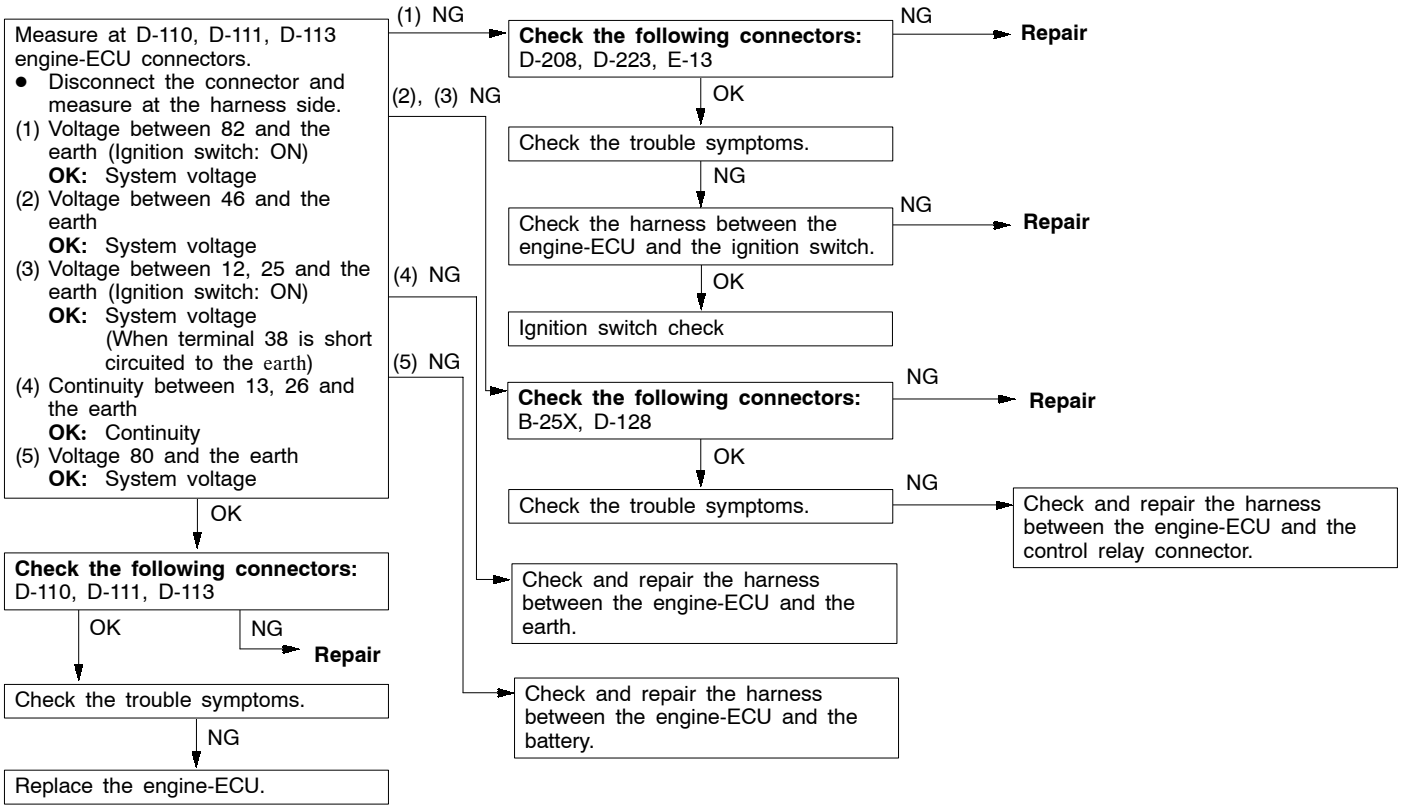


## INSPECTION PROCEDURE 21

### Fuel cut solenoid valve circuit inspection

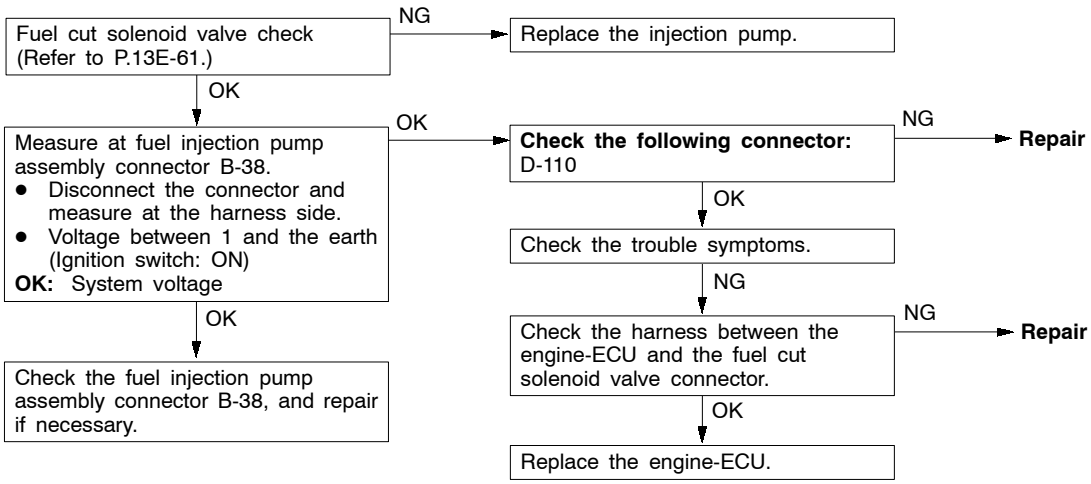


Purchased from www.WorkshopManuals.co.uk

www.WorkshopManuals.co.uk

## INSPECTION PROCEDURE 22

### EGR control solenoid valve No. 1 circuit inspection

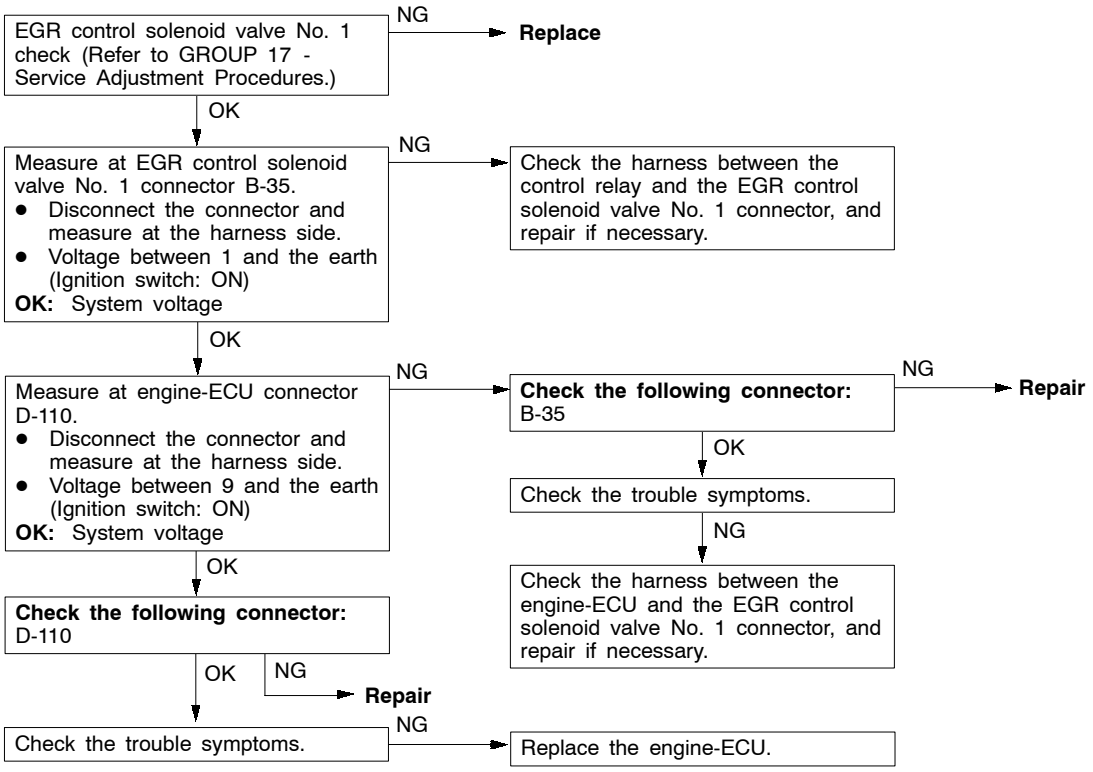


## INSPECTION PROCEDURE 23

### EGR control solenoid valve No. 2 circuit inspection

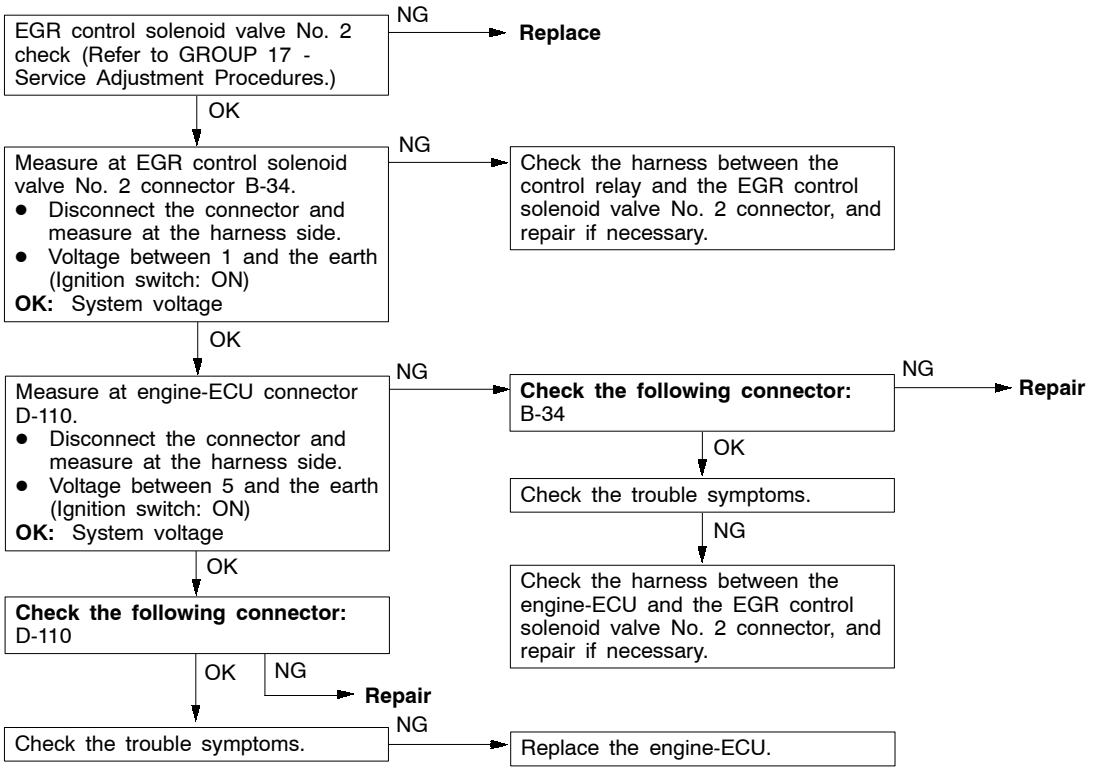


Purchased from www.WorkshopManuals.co.uk

www.WorkshopManuals.co.uk

## INSPECTION PROCEDURE 24

### Glow plug relay inspection

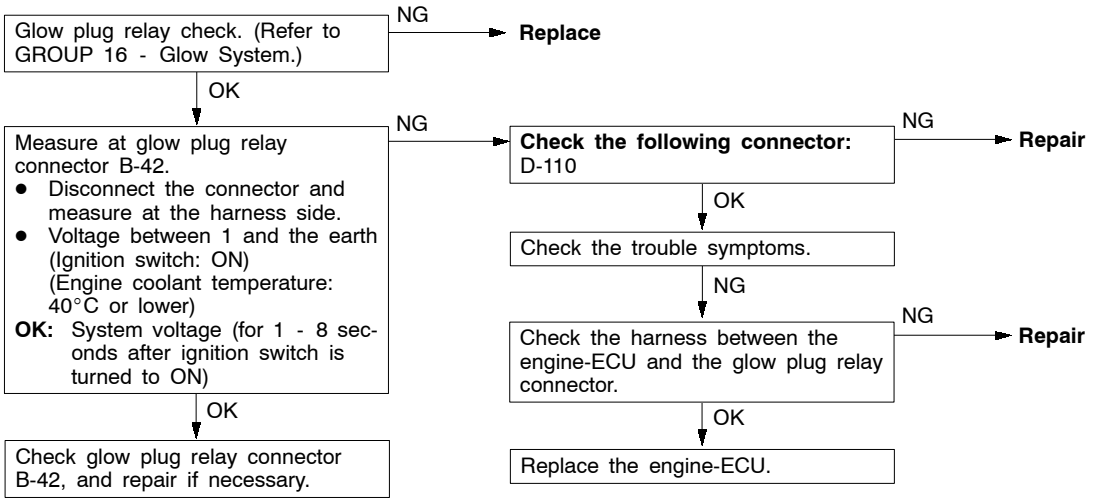


## INSPECTION PROCEDURE 25

### A/C switch and A/C relay inspection

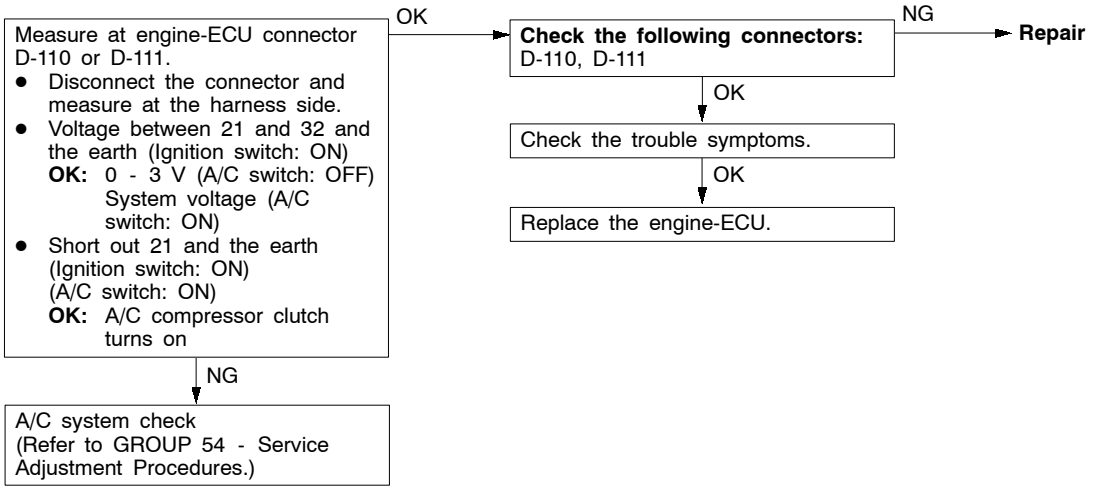


Purchased from www.WorkshopManuals.co.uk

www.WorkshopManuals.co.uk

## DATA LIST REFERENCE TABLE

| Item No. | Check item | Inspection conditions | | Value to be determined as normal | Code No. or inspection procedure No. | Reference page |
|---|---|---|---|---|---|---|
| 01 | Boost air temperature sensor | Ignition switch: ON or the engine running | When the intake air temperature is -20°C | -20°C | Code No. 16 | 13E-12 |
| | | | When the intake air temperature is 0°C | 0°C | | |
| | | | When the intake air temperature is 20°C | 20°C | | |
| | | | When the intake air temperature is 40°C | 40°C | | |
| | | | When the intake air temperature is 80°C | 80°C | | |
| 02 | Engine coolant temperature sensor | Ignition switch: ON or the engine running | When the engine coolant temperature is -20°C | -20°C | Code No. 15 | 13E-12 |
| | | | When the engine coolant temperature is 0°C | 0°C | | |
| | | | When the engine coolant temperature is 20°C | 20°C | | |
| | | | When the engine coolant temperature is 40°C | 40°C | | |
| | | | When the engine coolant temperature is 80°C | 80°C | | |
| 03 | Barometric pressure sensor | Ignition switch: ON | Altitude 0 m | 101 kPa | Code No. 13 | 13E-11 |
| | | | Altitude 600 m | 95 kPa | | |
| | | | Altitude 1,200 m | 88 kPa | | |
| | | | Altitude 1,800 m | 81 kPa | | |
| 04 | Boost pressure sensor | • Engine coolant temperature: 80 - 95°C<br>• Lamps, electrical cooling fan, and accessories: OFF<br>• Transmission: Neutral<br>• Ignition switch: ON | Altitude 0 m | 101 kPa | Code No. 12 | 13E-10 |
| | | | Altitude 600 m | 95 kPa | | |
| | | | Altitude 1,200 m | 88 kPa | | |
| | | | Altitude 1,800 m | 81 kPa | | |
| | | | Idling | 81 - 109 kPa | | |
| | | | When sudden racing is done | Increased | | |
| 05 | Fuel temperature sensor | Ignition switch: ON or the engine running | When the fuel temperature is -20°C | -20°C | Code No. 14 | 13E-11 |
| | | | When the fuel temperature is 0°C | 0°C | | |
| | | | When the fuel temperature is 20°C | 20°C | | |
| | | | When the fuel temperature is 40°C | 40°C | | |
| | | | When the fuel temperature is 80°C | 80°C | | |

Purchased from www.WorkshopManuals.co.uk

www.WorkshopManuals.co.uk

| Item No. | Check item | Inspection conditions | | Value to be determined as normal | Code No. or inspection procedure No. | Reference page |
|---|---|---|---|---|---|---|
| 06 | Vehicle speed sensor | When driving | Compare the engine speed displayed in the speed meter with that in MUT-II | Matched | Code No. 17 | 13E-13 |
| 07 | Pump speed sensor | Engine: Cranking | Compare the engine speed displayed in the tachometer with that in MUT-II | Matched | Code No. 18 | 13E-14 |
| | | Engine: Idling | | | | |
| 08 | Crank angle sensor | Engine: Cranking | Compare the engine speed displayed in the tachometer with that in MUT-II | Matched | Code No. 21 | 13E-15 |
| | | Engine: Idling | | | | |
| 09 | Accelerator pedal position sensor (main) | Ignition switch: ON | Accelerator pedal: Idling position | 1,015 - 1,055 mV | Code No. 11 | 13E-9 |
| | | | Accelerator pedal: Fully opened position | 4,035 - 4,500 mV or higher | | |
| 10 | Accelerator pedal position sensor (main) | Ignition switch: ON | Accelerator pedal: Idling position | 0 % | Code No. 11 | 13E-9 |
| | | | Accelerator pedal: Fully opened position | 99 - 100 % | | |
| 11 | System voltage | Ignition switch: ON | | System voltage | Procedure No. 20 | 13E-37 |
| 13 | Timing control valve*1 | Engine: After warming up the engine | Idling | 70 - 90 % | Code No. 25 or No. 43 | 13E-17<br>13E-21 |
| | | | When engine is suddenly raced | Changes | | |
| 14 | EGR command value | Engine: After warming up the engine | Idling | 0 - 100 %*2 | – | - |
| | | | When engine is suddenly raced | Momentarily decreases | | |
| 17 | Control sleeve position (target value) | Engine: After warming up the engine | Idling | 2.1 - 2.5 V | Code No. 26 | 13E-18 |
| | | | 2,500 r/min (no load) | 1.8 - 2.2 V | | |
| 18 | Actual injection timing | Engine: After warming up the engine | Idling | 0.7 - 1.2 V | – | – |
| | | | When engine is suddenly raced | Increases | | |
| 19 | Injection timing command value | Engine: After warming up the engine | Idling | 0.7 - 1.2 V | – | – |
| | | | When engine is suddenly raced | Increases | | |
| 21 | GE actuator | Engine: After warming up the engine | Idling | 0 % | Code No. 26 or No. 48 | 13E-18<br>13E-23 |
| | | | 2,500 r/min | 18 - 38 % | | |
| 23 | Control sleeve position (actual value) | Engine: After warming up the engine | Idling | 2.1 - 2.5 V | Code No. 26 | 13E-18 |
| | | | 2,500 r/min (no load) | 1.8 - 2.2 V | | |
| 24 | Accelerator pedal position sensor (sub) | Ignition switch: ON | Accelerator pedal: Idling position | 1,015 - 1,055 mV | Code No. 27 | 13E-19 |
| | | | Accelerator pedal: Fully opened position | 4,035 - 4,500 mV or higher | | |

Purchased from www.WorkshopManuals.co.uk

www.WorkshopManuals.co.uk

| Item No. | Check item | Inspection conditions | | Value to be determined as normal | Code No. or inspection procedure No. | Reference page |
|---|---|---|---|---|---|---|
| 25 | Accelerator pedal position sensor (sub) | Ignition switch: ON | Accelerator pedal: Idling position | 0 % | Code No. 27 | 13E-19 |
| | | | Accelerator pedal: Fully opened position | 99 - 100 % | | |
| 31 | EGR valve position sensor (target value) | Engine: After warming up the engine | Idling under no load | 2.3 - 3.3 V | Code No. 51 | 13E-25 |
| | | | Engine is suddenly raced | Momentarily decreases (0.3 - 0.7 V) | | |
| 32 | EGR valve position sensor (actual value) | Engine: After warming up the engine | Idling under no load | 2.3 - 3.3 V | Code No. 51 | 13E-25 |
| | | | Engine is suddenly raced | Momentarily decreases (0.3 - 0.7 V) | | |
| 33 | Variable geometry control pressure sensor | Engine: After warming up the engine | Idling | 53 - 59 kPa | Code No. 52 | 13E-26 |
| | | | Engine is suddenly raced | Momentarily increases | | |

NOTE
*1: The opening degree of the timing control valve is converted into percentage. (0 %: timer non-advanced angle, 100 %: timer maximum advanced angle)
*2: The opening degree of the EGR solenoid valve is converted into percentage.

| Item No. | Check item | Inspection conditions | | Value to be determined as normal | Code No. or inspection procedure No. | Reference page |
|---|---|---|---|---|---|---|
| 41 | Idle switch | Ignition switch: ON (check by repeated accelerator operation) | Release the foot from the accelerator pedal. | ON | Code No. 23 | 13E-16 |
| | | | Step on the accelerator pedal slightly. | OFF | | |
| 43 | A/C switch | Engine: Idling (The A/C compressor should be in operation when the A/C switch is "ON") | A/C switch: ON | ON | Procedure No. 25 | 13E-39 |
| | | | A/C switch: OFF | OFF | | |
| 44 | Ignition switch-ST | Ignition switch: ON | Engine: Stop | OFF | – | – |
| | | | Engine: Cranking | ON | | |
| 45 | Ignition switch-IG | Ignition switch: ON | | ON | – | – |
| 46 | Control relay | Ignition switch: ON | | ON | – | – |
| 47 | A/C relay | Engine: Idling after warming up the engine | A/C switch: OFF | OFF (A/C compressor clutch not in operation) | Procedure No. 25 | 13E-39 |
| | | | A/C switch: ON | ON (A/C compressor clutch in operation) | | |

Purchased from www.WorkshopManuals.co.uk

www.WorkshopManuals.co.uk

| Item No. | Check item | Inspection conditions | | Value to be determined as normal | Code No. or inspection procedure No. | Reference page |
|---|---|---|---|---|---|---|
| 50 | Condenser fan relay | Ignition switch: ON | A/C switch: OFF (engine coolant temperature at 102°C or higher)<br>A/C switch: ON (engine coolant temperature at 102°C or higher, or outside temperature at 15°C or higher) | ON | Procedure No. 19 | 13E-36 |
| | Condenser fan relay | Ignition switch: ON | A/C switch: OFF (engine coolant temperature at 95°C or lower)<br>A/C switch: ON (engine coolant temperature at 95°C or lower, or outside temperature at 15°C or lower) | OFF | | |
| 52 | Glow plug relay | • Ignition switch: ON<br>• Select actuator test item No. 02. | Relay not driven | OFF | Procedure No. 24 | 13E-39 |
| | | | Relay is forcibly driven | ON | | |
| 53 | Throttle solenoid valve | Ignition switch: ON (Engine stops) | | OFF | Code No. 41 | 13E-20 |
| | | Engine: main sensor or actuator is failed | | ON | | |
| 55 | Engine warning lamp | • Ignition switch: ON<br>• Select actuator test item No. 16. | Engine warning lamp off | OFF | Procedure No. 3 | 13E-30 |
| | | | Engine warning lamp is forced on | ON | | |
| 56 | Glow lamp | • Ignition switch: ON<br>• Select actuator test item No. 15. | Glow lamp off | OFF | – | – |
| | | | Glow lamp is forced on | ON | | |
| 60 | Fuel cut relay | • Ignition switch: ON<br>• Select actuator test item No. 27. | Relay not driven | OFF | Procedure No. 21 | 13E-37 |
| | | | Relay is forcibly driven | ON | | |
| 62 | AT/MT switch | Ignition switch: ON | Vehicles with M/T | M/T | – | – |
| 73 | EGR control solenoid valve No. 1 | Engine: After warming up the engine | Idling under no load (stable condition) | OFF | Procedure No. 22 | 13E-38 |
| | | | Engine is suddenly raced (EGR amount decreasing) | OFF | | |
| | | | Engine is suddenly raced (EGR amount increasing) | ON (momentarily) | | |
| 74 | EGR control solenoid valve No. 2 | Engine: After warming up the engine | Idling (stable condition) | ON | Procedure No. 23 | 13E-38 |
| | | | When engine is suddenly raced (EGR amount decreasing) | OFF (momentarily) | | |
| | | | When engine is suddenly raced (EGR amount increasing) | ON | | |

Purchased from www.WorkshopManuals.co.uk

www.WorkshopManuals.co.uk

## ACTUATOR TEST TABLE

| Item No. | Check item | Drive Contents | Inspection conditions | Value to be determined as normal | Code No. or inspection procedure No. | Reference page |
|---|---|---|---|---|---|---|
| 02 | Glow plug relay | Turning the relay from OFF to ON or from ON to OFF | Ignition switch: ON | Battery charge is energized to the glow plug when the glow plug relay is ON. | Procedure No. 24 | 13E-39 |
| 03 | A/C compressor relay | Turning the relay from OFF to ON or from ON to OFF | Ignition switch: ON | The A/C compressor clutch makes an audible sound. | Procedure No. 25 | 13E-39 |
| 11 | Timing control valve | Turn the timing control valve to ON | • Ignition switch: ON<br>• Engine: Idling<br>• Timer piston position sensor: Normal | Makes an audible sound | Code No. 43 | 13E-21 |
| 12 | | Turn the timing control valve to OFF | | | | |
| 15 | Glow lamp | Turn the glow lamp on or off | Ignition switch: ON | The glow lamp turns on. | – | – |
| 16 | Warning lamp | Turn the warning lamp on or off | Ignition switch: ON | The warning lamp turns on. | Procedure No. 3, 4 | 13E-30 |
| 22 | Condenser fan relay | Turning the relay from OFF to ON or from ON to OFF | Ignition switch: ON | The condenser fan rotates. | Procedure No. 19 | 13E-36 |
| 23 | Throttle solenoid valve | Turn the solenoid valve from OFF to ON or from ON to OFF | • Ignition switch: ON<br>• Vehicle speed: 0 km/h<br>• Engine speed: 1,000 r/min or lower | Makes an audible sound | Code No. 41 | 13E-20 |
| 25 | GE actuator | Turn the GE actuator to ON | • Ignition switch: ON<br>• Engine speed: 0 r/min or lower<br>• Control sleeve position sensor: Normal | Measure the wave pattern between engine-ECU connector terminals No. 1 and No. 15 using an analyzer and check the change in the duty ratio. | Code No. 48 | 13E-23 |
| 26 | | Turn the GE actuator to OFF | | | | |

Purchased from www.WorkshopManuals.co.uk

www.WorkshopManuals.co.uk

| Item No. | Check item | Drive Contents | Inspection conditions | Value to be determined as normal | Code No. or inspection procedure No. | Reference page |
|---|---|---|---|---|---|---|
| 27 | Fuel cut solenoid valve | Turn the solenoid valve from OFF to ON or from ON to OFF. | • Ignition switch: ON<br>• Vehicle speed: 0 km/h | Makes an audible sound | – | – |
| 34 | Middle position of GE actuator | Hold the injection governor in its middle position. | • Ignition switch: ON | When the crankshaft is turned clockwise during the adjustment of the injection timing, the injection pipes spray out fuel. | Code No. 48 | 13E-23 |
| 35 | Variable geometry solenoid valve | Turn the solenoid valve to ON | Ignition switch: ON | Makes an audible sound | Code No. 49 | 13E-24 |
| 36 | | Turn the solenoid valve to OFF | Engine: Idling | Operating sound and vibration, which accompany with the duty activation, cease. | | |
| 37 | EGR control solenoid valve No. 1 | Turn the solenoid valve from OFF to ON from ON to OFF | Ignition switch: ON | Makes an audible sound | Procedure No. 22 | 13E-38 |
| 38 | EGR control solenoid valve No. 2 | Turn the solenoid valve from OFF to ON from ON to OFF | Ignition switch: ON | Makes an audible sound | Procedure No. 23 | 13E-38 |

Purchased from www.WorkshopManuals.co.uk

www.WorkshopManuals.co.uk

## CHECK AT THE ENGINE-ECU TERMINALS

### TERMINAL VOLTAGE CHECK CHART

### Engine-ECU Connector Terminal Arrangement

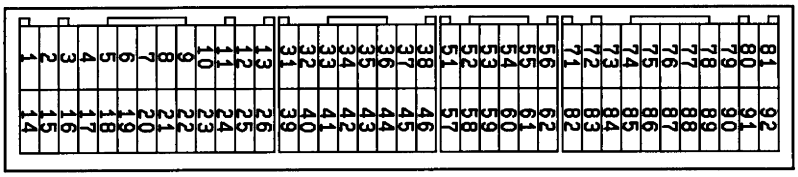

W6106AQ

| Terminal No. | Check item | Inspection conditions (engine status) | | Normal condition: |
|---|---|---|---|---|
| 1 | GE actuator | Ignition switch: ON (Engine stops) | | 9 V or higher |
| 2 | Fuel cut solenoid valve | Other than below | | 0 - 1 V |
| | | Engine: Idling → Stop (in about 1 - 3 second) | | System voltage (for 3 - 5 seconds) |
| 3 | Timing control valve | Ignition switch: ON (Engine stops) | | 11 V or higher |
| 4 | Glow lamp | Ignition switch: OFF → ON | | 0 - 1 V (In few seconds) → System voltage |
| 5 | EGR control solenoid valve No. 2 | Engine: Idling after warming up the engine (stable condition) | | System voltage |
| | | When any one of the following conditions is satisfied:<br>● Engine speed: 3,700 r/min or higher<br>● Engine speed: 450 r/min or lower<br>● Vehicle speed: 176 km/h or higher<br>● The accelerator pedal is fully depressed<br>● The accelerator pedal is released when engine speed is 2,700 r/min or higher and vehicle speed is 140 km/h or higher<br>● Engine coolant temperature: 112°C or higher | | System voltage |
| 7 | Condenser fan relay | Condenser fan in operation | | 0 - 1 V |
| 8 | Engine warning lamp | Ignition switch: OFF → ON | | 0 -1 V (In few seconds) → System voltage |
| 9 | EGR control solenoid valve No. 1 | Ignition switch: ON | | System voltage |
| | | Engine: After warming up the engine, conduct sudden racing from idling. | | Very briefly rises from voltage during idling |
| 12 | Power supply | Ignition switch: ON | | System voltage |
| 25 | | | | |
| 14 | Throttle solenoid valve | Ignition switch: ON (Engine stops) | | System voltage |
| | | Engine: Idling after warming up the engine. | | 0 - 1 V |
| 15 | GE actuator power supply | Ignition switch: ON | | System voltage |
| 16 | Glow plug relay | ● Engine coolant temperature: 40°C or lower<br>● Ignition switch: OFF → ON | | System voltage (In about 8 seconds: at 20°C) → 0 - 1 V |
| 17 | Variable geometry solenoid valve | Engine: After warming up the engine | Engine is idling | 4.4 - 10.1 V |
| | | | Engine is suddenly raced | Voltage rises |

Purchased from www.WorkshopManuals.co.uk

www.WorkshopManuals.co.uk

| Terminal No. | Check item | Inspection conditions (engine status) | | Normal condition: |
|---|---|---|---|---|
| 21 | A/C relay | A/C switch: OFF → ON | | System voltage → 0 - 1 V |
| 31 | Idle switch | Ignition switch: ON | Release the foot from the accelerator pedal. | 0 - 1 V |
| | | | Step on the accelerator pedal slightly | 3 V or higher |
| 32 | A/C switch | A/C in operation (compressor in operation) | | System voltage |
| 36 | Selector switch between A/T and M/T | Ignition switch: ON | | System voltage (M/T) |
| 46 | Control relay | Ignition switch: ON | | 0 - 1 V |
| | | Ignition switch: ON → OFF (in about 8 seconds) | | System voltage |
| 51 | Pump speed sensor | Engine: Idling (Use a digital voltage meter to check.) | | 0 V ↔ 5 V (repeat the change) |
| 55 | Accelerator pedal position sensor (sub) | Ignition switch: ON | Accelerator pedal: Idling position | 0.9 - 1.1 V |
| | | | Accelerator pedal: Fully opened position | 3.7 V or higher |
| 60 | Sensor power supply | Ignition switch: ON | | 4.6 - 5.4 V |
| 71 | Ignition switch-ST | Engine: Cranking | | 8 V or higher |
| 80 | Back-up power supply | Ignition switch: OFF | | System voltage |
| 81 | Power supply to accelerator pedal position sensor (main) | Ignition switch: ON | | 4.6 - 5.4 V |
| 82 | Ignition switch-IG | Ignition switch: ON | | System voltage |
| 83 | Engine coolant temperature sensor | Ignition switch: ON | Engine coolant temperature: 0°C | 3.7 - 4.3 V |
| | | | Engine coolant temperature: 20°C | 2.8 - 3.4 V |
| | | | Engine coolant temperature: 40°C | 1.9 - 2.5 V |
| | | | Engine coolant temperature: 80°C | 0.6 - 1.2 V |
| 84 | Accelerator pedal position sensor (main) | Ignition switch: ON | Accelerator pedal: Idling position | 0.9 - 1.1 V |
| | | | Accelerator pedal: Fully opened position | 3.7 V or higher |
| 85 | Boost pressure sensor | Ignition switch: ON (101 kPa) | | 1.0 - 1.4 V |
| 86 | Vehicle speed sensor | • Ignition switch: ON<br>• Move the vehicle forward slowly | | 0 V ↔ 8 - 12 V (repeat the change) |
| 87 | Fuel temperature sensor | Ignition switch: ON | Fuel temperature: 0°C | 3.2 - 3.6 V |
| | | | Fuel temperature: 20°C | 2.3 - 2.7 V |
| | | | Fuel temperature: 40°C | 1.5 - 1.9 V |
| | | | Fuel temperature: 80°C | 0.4 - 0.8 V |

Purchased from www.WorkshopManuals.co.uk

www.WorkshopManuals.co.uk

| Terminal No. | Check item | Inspection conditions (engine status) | | Normal condition: |
|---|---|---|---|---|
| 88 | Boost air temperature sensor | Ignition switch: ON | Intake air temperature: 0°C | 3.2 - 3.8 V |
| | | | Intake air temperature: 20°C | 2.3 - 2.9 V |
| | | | Intake air temperature: 40°C | 1.4 - 2.0 V |
| | | | Intake air temperature: 80°C | 0.4 - 1.0 V |
| 89 | Crank angle sensor | Engine: Idling (Use a digital voltage meter to check.) | | 0 V ↔ 5 V (repeat the change) |
| 90 | EGR valve position sensor | Engine: After warming up the engine | Idling under no load | 2.3 - 3.3 V |
| | | | Engine is suddenly raced | Momentarily drops from voltage during idling |
| 91 | Parking switch | Ignition switch: ON (Engine stops) | Parking brake: ON | 0 - 1 V |
| | | | Parking brake: OFF | System voltage |

## CHECK CHART FOR RESISTANCE AND CONTINUITY BETWEEN TERMINALS

1. Turn the ignition switch to LOCK (OFF) position.
2. Disconnect the engine-ECU connector.
3. Measure the resistance and check for continuity between the terminals of the engine-ECU harness-side connector while referring to the check chart.

   NOTE
   (1) When measuring resistance and checking continuity, a harness for checking contact pin pressure should be used instead of inserting a test probe.
   (2) Checking need not be carried out in the order given in the chart.

   **Caution**
   **If the terminals that should be checked are mistaken, or if connector terminals are not correctly shorted to earth, damage may be caused to the vehicle wiring, sensors, engine-ECU and/or ohmmeter.**
   **Be careful to prevent this!**

4. If the ohmmeter shows any deviation from the standard value, check the corresponding sensor, actuator and related electrical wiring, and then repair or replace.
5. After repair or replacement, recheck with the ohmmeter to confirm that the repair or replacement has corrected the problem.

Purchased from www.WorkshopManuals.co.uk

www.WorkshopManuals.co.uk

## Engine-ECU Harness Side Connector Terminal Arrangement

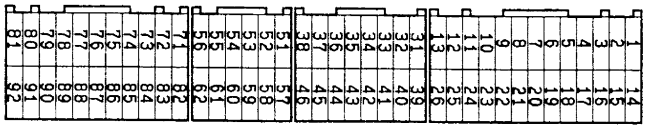


| Terminal No. | Inspection item | Normal condition (Check condition) |
|---|---|---|
| 1 - 15 | GE actuator | 0.64 - 0.72 Ω |
| 2 - Body earth | Fuel cut solenoid valve | 6.8 - 9.2 Ω |
| 3 - 12 | Timing control valve | 10.8 - 11.2 Ω |
| 5 - 12 | EGR control solenoid valve No. 2 | 36 - 44 Ω (at 20°C) |
| 9 - 12 | EGR control solenoid valve No. 1 | 36 - 44 Ω (at 20°C) |
| 13 - Body earth | Engine-ECU earth | Continuity (0 Ω) |
| 26 - Body earth | | |
| 14 - 12 | Throttle solenoid valve | 29 - 35 Ω (at 20°C) |
| 31 - 61 | Idle switch | Continuity (Replace the foot from the accelerator pedal) |
| | | No continuity (when accelerator pedal is fully depressed) |
| 51 - 61 | Pump speed sensor | 1.36 - 1.84 kΩ |
| 73 - 74 | Control sleeve position sensor | 5.6 - 6.2 Ω |
| 73 - 75 | | 5.6 - 6.2 Ω |
| 74 - 75 | | 11.2 - 12.4 Ω |
| 77 - 78 | Timer piston position sensor | 160 - 168 Ω |
| 76 - 77 | | 80 - 84 Ω |
| 76 - 78 | | 80 - 84 Ω |

Purchased from www.WorkshopManuals.co.uk

www.WorkshopManuals.co.uk

| Terminal No. | Inspection item | Normal condition (Check condition) |
|---|---|---|
| 83 - 61 | Engine coolant temperature sensor | 5.1 - 6.5 kΩ (when the engine coolant temperature is 0°C) |
| | | 2.1 - 2.7 kΩ (when the engine coolant temperature is 20°C) |
| | | 0.9 - 1.3 kΩ (when the engine coolant temperature is 40°C) |
| | | 0.26 - 0.36 kΩ (when the engine coolant temperature is 80°C) |
| 87 - 61 | Fuel temperature sensor | 5.1 - 6.5 kΩ (when the fuel temperature is 0°C) |
| | | 2.1 - 2.7 kΩ (when the fuel temperature is 20°C) |
| | | 0.9 - 1.3 kΩ (when the fuel temperature is 40°C) |
| | | 0.26 - 0.36 kΩ (when the fuel temperature is 80°C) |
| 88 - 61 | Boost air temperature sensor | 5.3 - 6.7 kΩ (when the intake air temperature is 0°C) |
| | | 2.3 - 3.0 kΩ (when the intake air temperature is 20°C) |
| | | 1.0 - 1.5 kΩ (when the intake air temperature is 40°C) |
| | | 0.30 - 0.42 kΩ (when the intake air temperature is 80°C) |

Purchased from www.WorkshopManuals.co.uk

www.WorkshopManuals.co.uk

## INSPECTION PROCEDURE USING AN ANALYZER

### CRANK ANGLE SENSOR

An analyzer can be used to observe the wave pattern in order to visually check the crankshaft rotation and abnormalities in the sensor output.

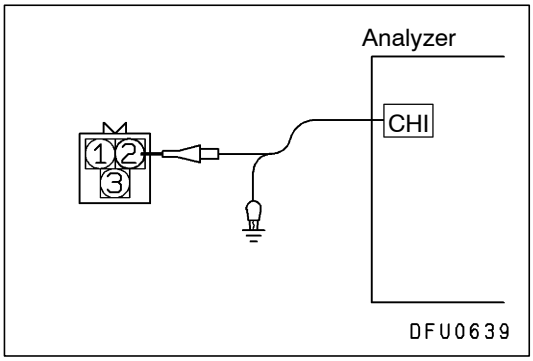


**Measurement Method**

1. Disconnect the crank angle sensor connector and connect the special tool (test harness: MD998478) in between.
2. Connect the analyzer probe to terminal No. 2 of the crank angle sensor connector (black clip of special tool).

   NOTE
   When measuring at the engine-ECU connector, connect the analyzer probe to terminal No. 89.

**Standard Wave Pattern**

**Observation conditions**

| | Crank angle sensor |
|---|---|
| Probe select switch | × 1 |
| TIME/DIV. | 10 ms |
| VOLTS/DIV. | 2 V |
| AC - GND - DC | DC |
| Other | - |
| Engine r/min | Idle speed |

Purchased from www.WorkshopManuals.co.uk

www.WorkshopManuals.co.uk

**Standard wave pattern**

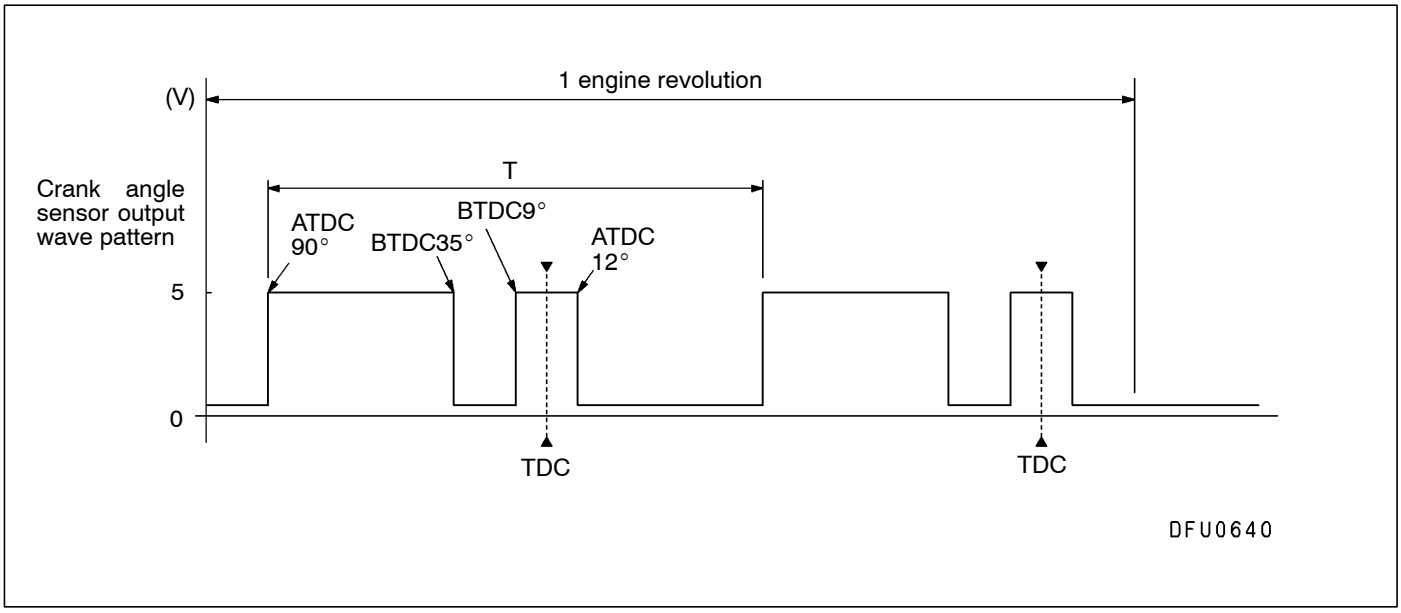


**Explanation of Wave Pattern**

The crank angle sensor detects the rotation of a sensing plate. Accordingly, the period T (seconds) can be measured and the engine speed can be calculated from the following formula.

$$\text{Engine speed (r/min)} = \frac{2}{4T\ (\text{sec})} \times 60 = \frac{30}{T\ (\text{sec})}$$

**Wave Pattern Observation Points**

Check that cycle time T becomes shorter and the frequency increases when the engine speed is increased.

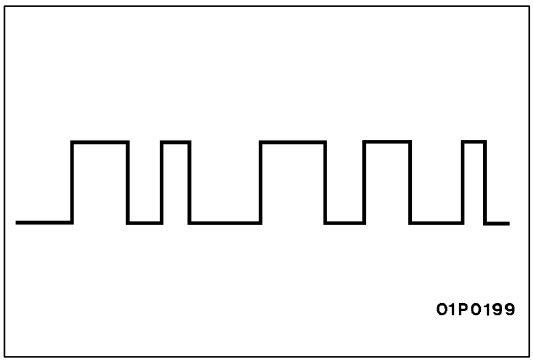


**Examples of Abnormal Wave Patterns**

- Example 1

  **Cause of problem**

  Sensor interface malfunction

  **Wave pattern characteristics**

  Rectangular wave pattern is output even when the engine is not started.

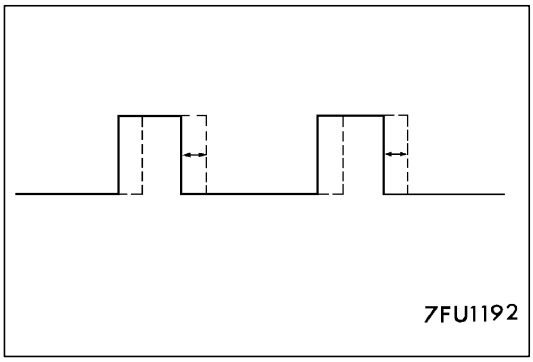


- Example 2

  **Cause of problem**

  Abnormality in sensor disk

  **Wave pattern characteristics**

  Wave pattern is displaced to the left or right.

Purchased from www.WorkshopManuals.co.uk

www.WorkshopManuals.co.uk

## PUMP SPEED SENSOR

An analyzer can be used to observe the wave pattern in order to visually check the pump shaft rotation and abnormalities in the sensor output.

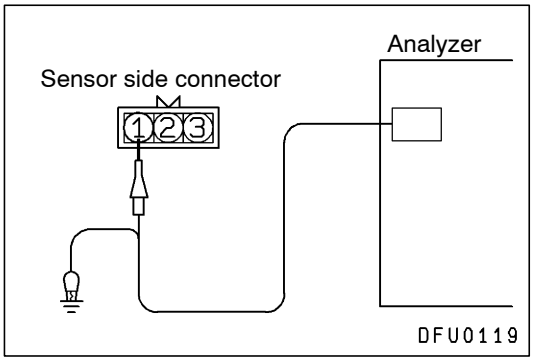


### Measurement Method

1. Disconnect the pump speed sensor connector and connect the special tool (test harness: MD991658) in between. (All terminals should be connected.)
2. Connect the analyzer probe to terminal No. 1 of the pump speed sensor connector (black clip of special tool).

   NOTE
   When measuring at the engine-ECU connector, connect the analyzer probe to terminal No. 51.

### Standard Wave Pattern

### Observation conditions

| | Pump speed sensor |
|---|---|
| Probe select switch | Set according to the probe. |
| TIME/DIV. | About 10 msec |
| VOLTS/DIV. | About 0.5 V |
| AC - GND - DC | DC |
| Engine r/min | Idle speed |

Purchased from www.WorkshopManuals.co.uk

www.WorkshopManuals.co.uk

**Standard wave pattern**

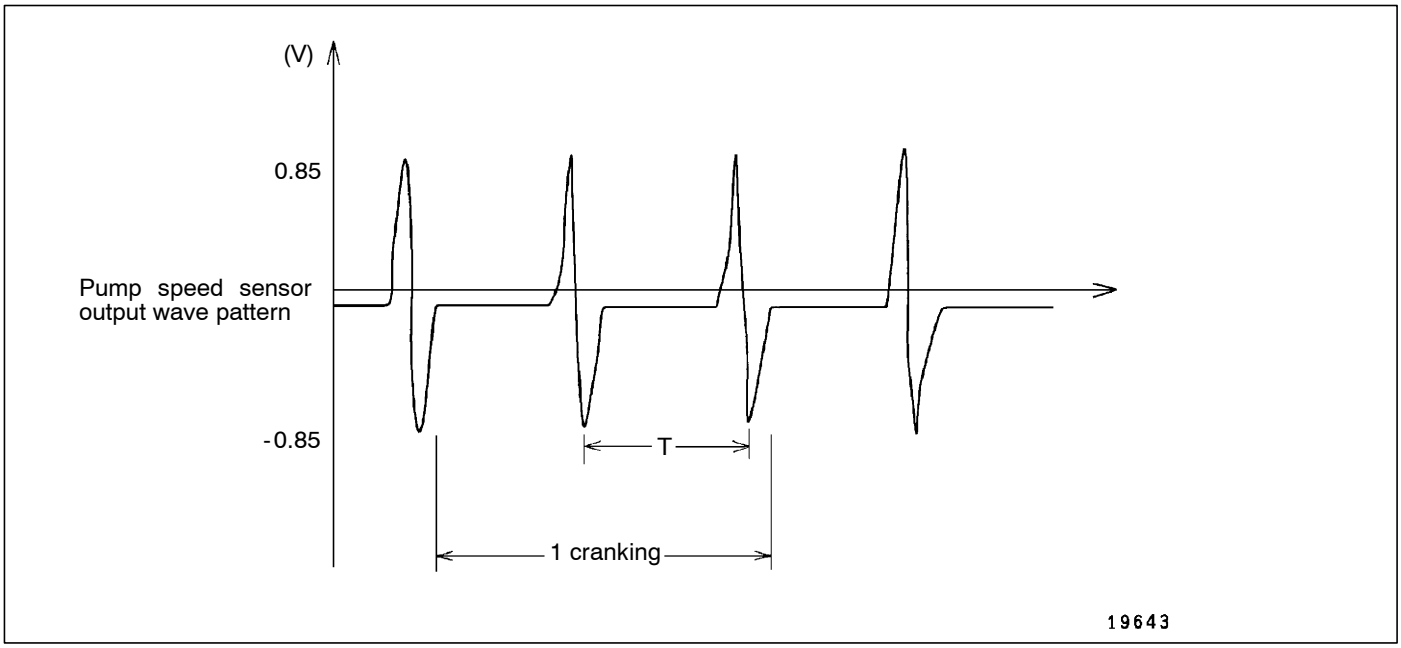


**Explanation of Wave Pattern**

The pump speed sensor detects the rotation of the pump shaft. Accordingly, the period T (seconds) can be measured and the engine speed can be calculated from the following formula.

$$\text{Engine speed} = \frac{2}{4 \times T\ (\text{sec})} \times 60$$

**Wave Pattern Observation Points**

Check that cycle time T becomes shorter and the frequency increases when the engine speed is increased.

**Examples of Abnormal Wave Patterns**

- Example 1

  **Cause of problem**

  Malfunction or open circuit in sensor

  **Wave pattern characteristics**

  No signal is output even when engine is started.

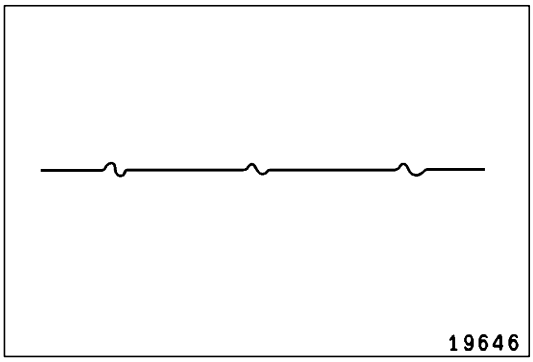


- Example 2

  **Cause of problem**

  Incorrect gap between sensor and sensing gear plate

  **Wave pattern characteristics**

  No signal is output even when engine is started, or signal amplitude is small.

Purchased from www.WorkshopManuals.co.uk

www.WorkshopManuals.co.uk

# ON-VEHICLE SERVICE

## INJECTION TIMING CHECK AND ADJUSTMENT

Refer to GROUP 11B - Engine Adjustment.

## IDLE SPEED CHECK AND ADJUSTMENT

Refer to GROUP 11B - Engine Adjustment.

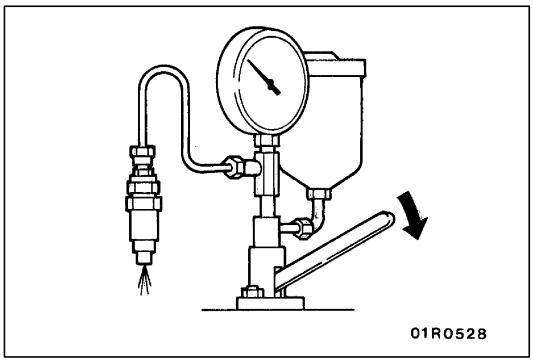


## INJECTION NOZZLE CHECK AND ADJUSTMENT

**Caution**
**Never touch the injection spray that is injected from the nozzle.**

### FUEL INJECTION INITIAL PRESSURE CHECK

1. Install the injection nozzle to a nozzle tester.
2. Move the lever of the nozzle tester 2 - 3 times to inject fuel and to bleed the air.
3. Gently press down the lever of the nozzle tester, and take a reading of the indication value on the pressure gauge at the point where the needle slowly rises and then suddenly drops.

   **Standard value (Fuel injection initial pressure): 14,710 - 15,490 kPa**

4. If the fuel injection initial pressure is outside the standard value, disassembly the nozzle holder to clean it, and then change the thickness of the shim to adjust the fuel injection initial pressure.

   NOTE
   (1) For disassembly, reassembly and adjustment of the nozzle holder, refer to P.13B-8.
   (2) There are 10 shims for adjustment, with thicknesses in the range of 0.10 - 0.80 mm.
   (3) When the shim thickness is increased by 0.1 mm, the fuel injection initial pressure increases by 2,350 kPa.

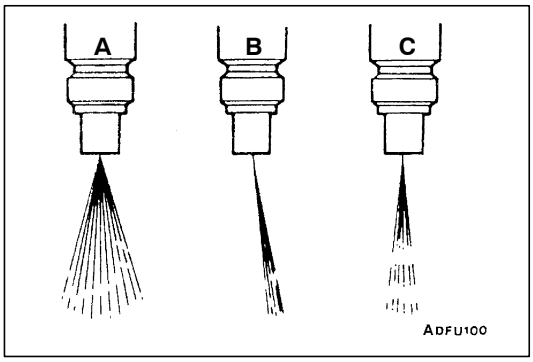


### INJECTION SPRAY CONDITION CHECK

1. Move the lever of the nozzle tester rapidly (4 - 6 times per second) to eject the fuel continuously. Check to be sure that the injection spray comes out evenly in a cone shape (injection spray angle is 0°). The injection spray patterns shown in the illustration at left are wrong.
   A. Injection angle is tool large
   B. Bias
   C. Intermittent fuel injection

Purchased from www.WorkshopManuals.co.uk

www.WorkshopManuals.co.uk

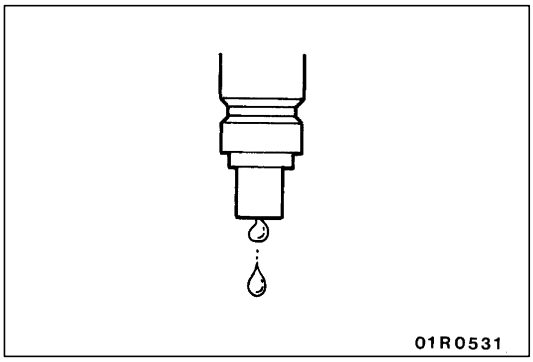


2. Check to be sure that no fuel drips after injection is completed.
3. If there are any drips, disassemble the nozzle, clean it and reinspect, or replace the nozzle.

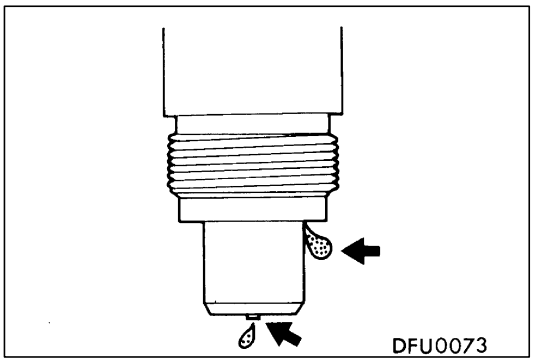


**NOZZLE FUEL-TIGHT CHECK**

1. Gently raise the lever of the nozzle tester until the pressure inside the nozzle (value displayed on pressure gauge) becomes 12,750 - 13,730 kPa, and after holding this pressure for approximately 10 seconds, check to be sure that there are no fuel leaks from the nozzle.
2. If there are any leaks, disassemble the injection nozzle, clean it and re-inspect, or replace the nozzle.

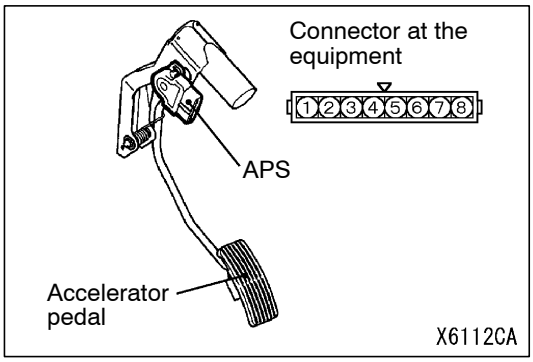


## ACCELERATOR PEDAL POSITION SENSOR (APS) ADJUSTMENT

**Caution**

**(1) APS is properly adjusted in the factory. Therefore, APS should not be moved carelessly.**

**(2) If the adjustment is not done correctly, carry out a new adjustment in the following procedure:**

1. Remove accelerator pedal complete.

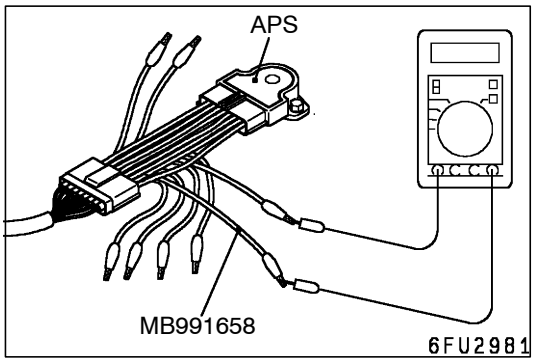


2. Connect MUT-II to the diagnosis connector. If MUT-II is not used, the following operation should be done:
   (1) Disconnect APS connector and connect the special tool (test harness: MB991658) between two connectors.
   (Be careful not to take a wrong terminal No.)
   (2) Connect a digital voltmeter between APS connector terminal No. 3 (APS main output) and terminal No. 1 (APS main earth).
3. Loosen the APS mounting bolt to make it temporarily tightened.

Purchased from www.WorkshopManuals.co.uk

www.WorkshopManuals.co.uk

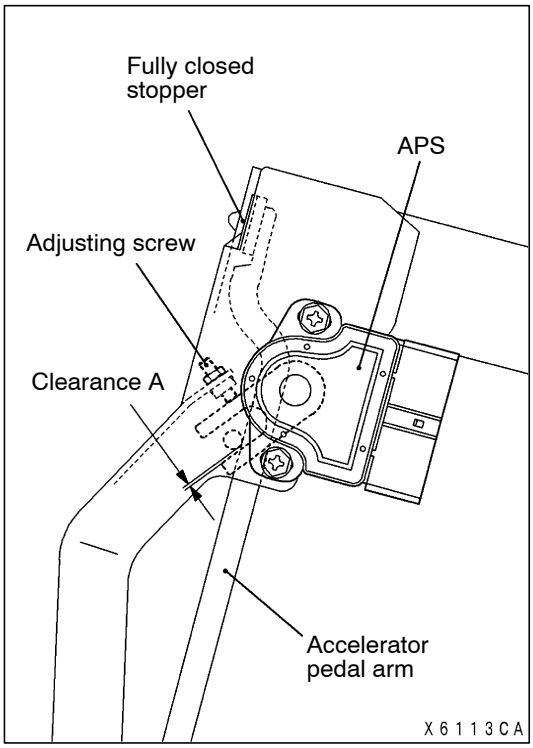


4. Ensure that the accelerator pedal arm contacts the closing stopper.
5. Use the adjusting screw to make the clearance A (shown in the illustration) between 0.5 and 0.93 mm.
6. Secure the adjusting screw with the lock nut.
7. Turn the ignition switch to “ON” position. (Engine does not start.)
8. Turn APS to make APS (main) output the standard value.

   **Standard value: 0.985 - 1.085 V**

9. Tighten the APS mounting bolt securely.
10. Install the accelerator pedal complete.

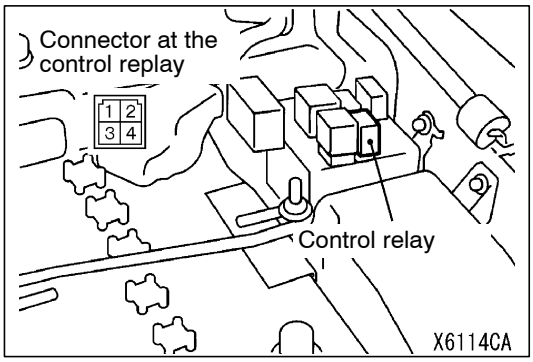


## CONTROL RELAY CONTINUITY CHECK

| Terminals to be connected | Battery voltage | Normal conation |
|---|---|---|
| 2 - 4 | Not applied | Continuity |
| 1 - 3 | Not applied | No continuity |
| | Connect a positive battery cable to No.2 terminal and a negative battery cable to No.4 terminal, respectively. | Continuity |

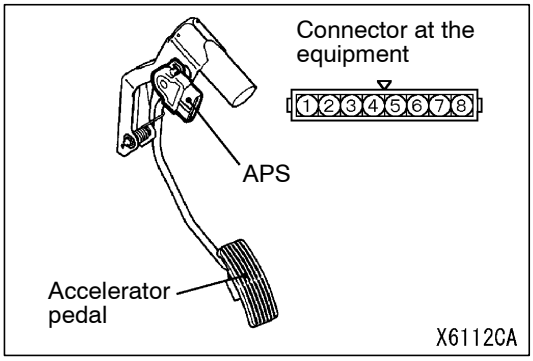


## ACCELERATOR PEDAL POSITION SENSOR (APS) CHECK

1. Disconnect the APS connector.
2. Measure the resistance between APS connector terminal No. 2 [APS main power supply] and the terminal No. 1 [APS main earth] as well as the resistance between terminal No. 8 [APS sub power supply] and terminal No. 7 [APS sub earth].

   **Standard value: 3.5 - 6.5 kΩ**

3. Measure the resistance between APS connector terminal No. 2 (APS main power supply) and the terminal No. 3 (APS main output) as well as the resistance between terminal No. 8 (APS sub power supply) and terminal No. 7 (APS sub output).

   **Normal condition:**

| | |
|---|---|
| Step on the accelerator pedal slowly. | Resistance smoothly changes in proportion to the travel of the accelerator pedal. |

Purchased from www.WorkshopManuals.co.uk

www.WorkshopManuals.co.uk

4. If the APS is out of the range of the standard value or the resistance does not change smoothly, replace APS.

   NOTE
   Make an adjustment on APS after replacement. (Refer to P.13E-56.)

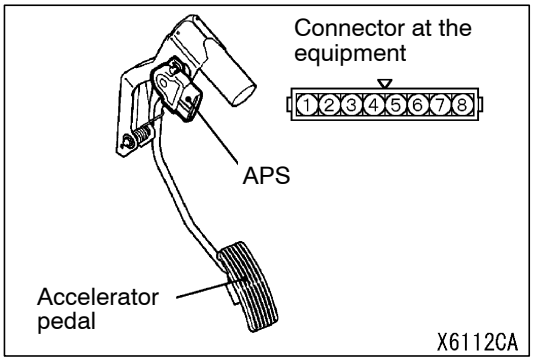


## IDLE SWITCH CHECK

1. Disconnect the accelerator pedal position sensor (APS) connector.
2. Check the continuity between the idle switch connector terminal No. 4 (idle switch) and terminal No. 5 (earth).

   **Normal condition:**

| Accelerator pedal | Continuity |
|---|---|
| Step on | None |
| Release | Yes |

3. Replace APS if it is inoperative.

   NOTE
   Make an adjustment on APS after replacement. (Refer to P.13E-56.)

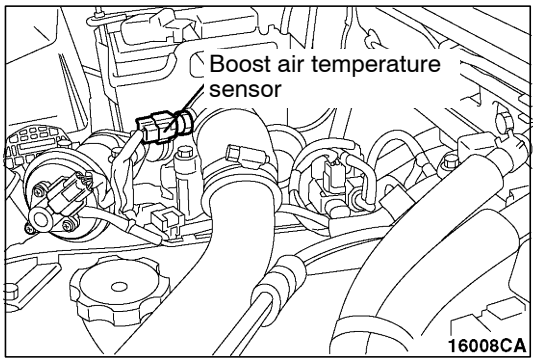


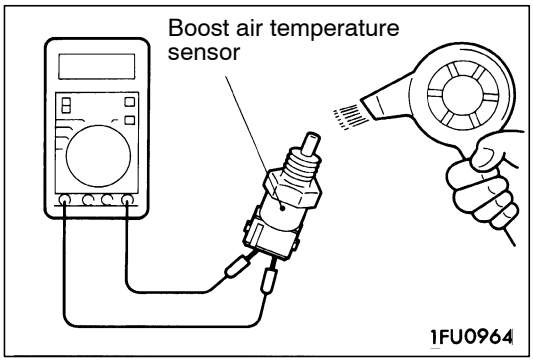


## BOOST AIR TEMPERATURE SENSOR (INTAKE AIR TEMPERATURE SENSOR) CHECK

1. Remove the boost air temperature sensor.
2. Measure the resistance at the boost air temperature sensor connector terminal.

   **Standard value:**
   **2.3 - 3.0 kΩ (at 20°C)**
   **0.30 - 0.42 kΩ (at 80°C)**

3. Measure the resistance at the sensor part being warmed up by a hair dryer.

   **Normal condition:**

| Temperature (°C) | Resistance value (kΩ) |
|---|---|
| Rising | Become smaller |

4. If the resistance is not within the range of the standard value or does not change at all, replace the boost air temperature sensor.

Purchased from www.WorkshopManuals.co.uk

www.WorkshopManuals.co.uk

NOTE
Replace the gasket as well.

5. Tighten the boost air temperature sensor to the specified torque.

   **Tightening torque: 14 ± 1 N·m**

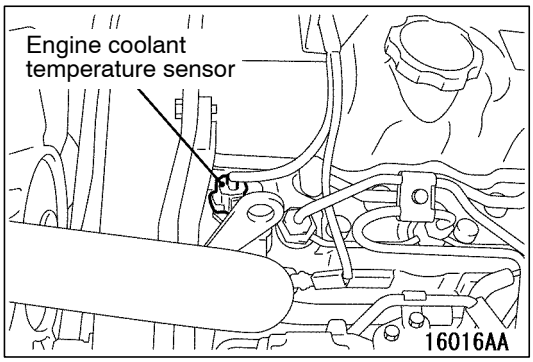


## ENGINE COOLANT TEMPERATURE SENSOR CHECK

1. Remove the engine coolant temperature sensor.

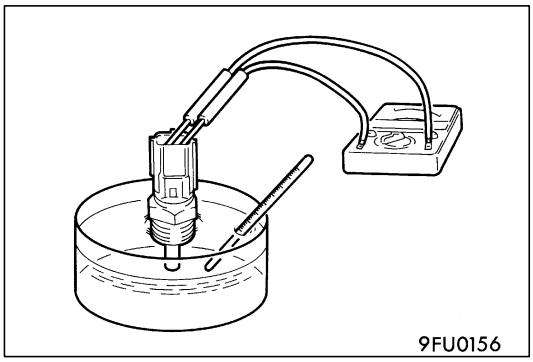


2. Measure the resistance between the terminals of the connectors while immersing the sensor part of the engine coolant temperature sensor in the hot water.

   **Standard value:**
   **2.1 - 2.7 kΩ (at 20°C)**
   **0.26 - 0.36 kΩ (at 80°C)**

3. If the resistance is not within the range of the standard value, replace the engine coolant temperature sensor.

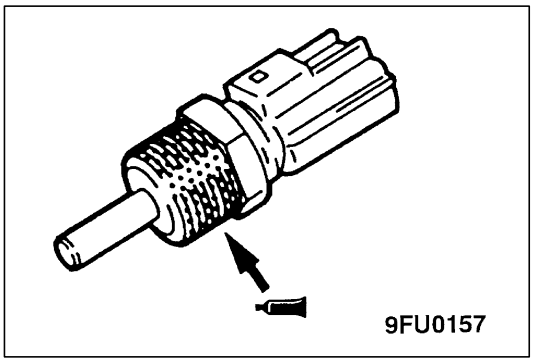


4. Apply the sealant to the thread of the engine coolant temperature sensor and tighten it to the specified torque.

   **Sealant:**
   **3M Nut Locking Part No. 4171 or equivalent**

   **Tightening torque: 36 ± 6 N·m**

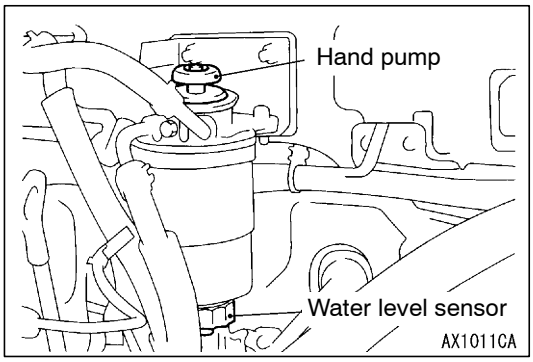


## EVACUATION OF WATER FROM FUEL FILTER

Water is in the filter when fuel filter warning lamp illuminates. Evacuate water by the following procedure.

1. Loosen the water level sensor.
2. After water is evacuated by using a hand pump, tighten the water level sensor to the specified torque.

   **Tightening torque: 2.5 ± 0.5 N·m**

Purchased from www.WorkshopManuals.co.uk

www.WorkshopManuals.co.uk

## FUEL FILTER CARTRIDGE REPLACEMENT

Refer to GROUP 13D of the 2001 PAJERO Workshop Manual {Pub. No. PWJE0001 (1/2)}

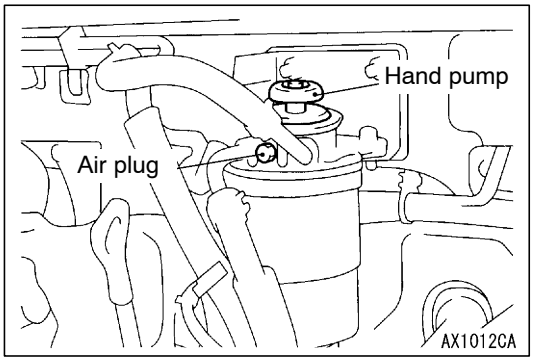


## EVACUATION OF AIR FROM FUEL LINE

When the following service work(s) is done, refill the fuel tank and then evacuate air from the fuel line.

- Fuel hose is removed
- Fuel filter is replaced
- Fuel injection nozzle is removed
- If necessary for access, fuel is drained from the fuel tank.

1. Loosen the fuel filter air plug.
2. Cover the circumference of the air plug hole with cloth and use a manual pump repeatedly until no bubbles come out of the plug hole, then tighten the air plug to the specified torque.

   **Tightening torque: 6.0 ± 1.0 N·m**

3. Repeat until the hand pump operation becomes stiff.

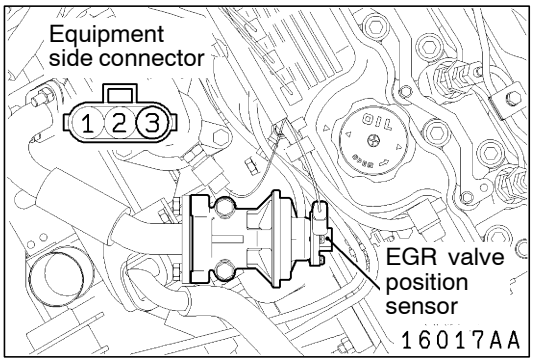


## EGR VALVE POSITION SENSOR CHECK

1. Disconnect the EGR valve position sensor connector.
2. Measure the resistance between the EGR valve position sensor side connector terminal No. 2 and terminal No. 3.

   **Standard value: 3.5 - 6.5 kΩ**

3. Install a hand vacuum pump to the EGR valve nipple.
4. Measure the resistance between the EGR valve position sensor-side connector terminal No. 1 and terminal No. 3 when a negative pressure is applied.

   **Normal condition:**

| | |
|---|---|
| Slowly increase the negative pressure to 60 kPa. | Changes smoothly in proportion to the negative pressure |

5. If the resistance is outside the standard value, or if it doesn't change smoothly, replace the EGR valve position sensor.

Purchased from www.WorkshopManuals.co.uk

www.WorkshopManuals.co.uk

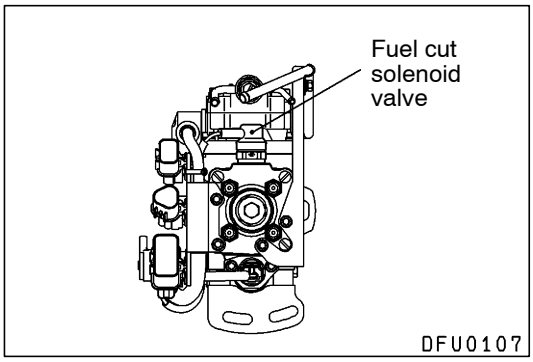


## FUEL INJECTION PUMP CHECK

### FUEL CUT SOLENOID VALVE CHECK

**Operation noise check**

1. Attach the sound scope to the fuel cut solenoid valve to check for running noise when the ignition switch is "ON" position.

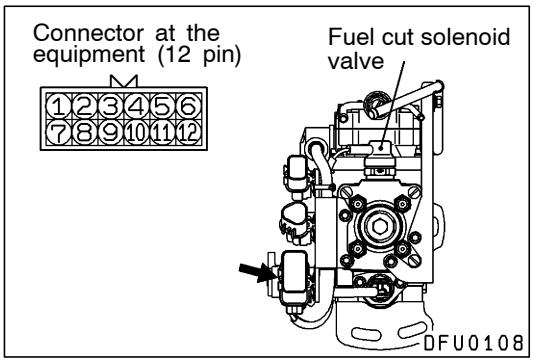


**Coil resistance check**

1. Disconnect the injection pump connector (12 pin).
2. Measure the resistance between terminal No. 1 (fuel cut solenoid valve) and the injection pump body.

   **Standard value: 6.8 - 9.2 Ω**

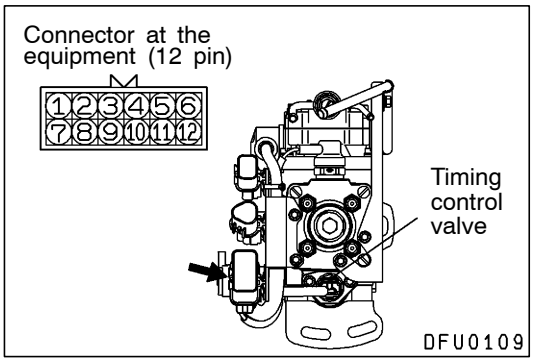


### TIMING CONTROL VALVE CHECK

1. Disconnect the injection pump connector (12 pin).
2. Measure the resistance between terminal No. 5 and terminal No. 9.

   **Standard value: 10.8 - 11.2 Ω**

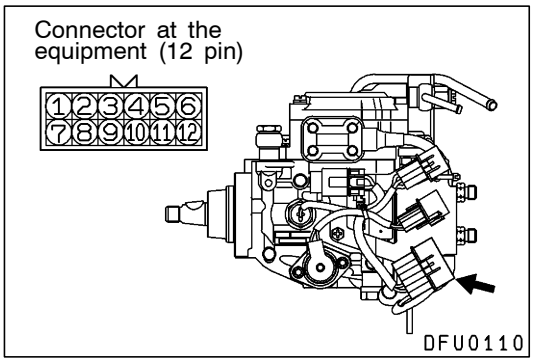


### GE ACTUATOR (ELECTRONIC GOVERNOR) CHECK

1. Disconnect the injection pump connector (12 pin).
2. Measure the resistance between terminal No. 6 and terminal No. 10.

   **Standard value: 0.64 - 0.72 Ω**

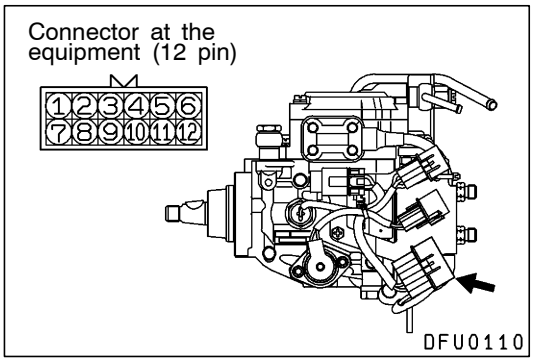


### FUEL TEMPERATURE SENSOR CHECK

1. Disconnect the injection pump connector (12 pin).
2. Measure the resistance between terminal No. 7 and terminal No. 11.

   **Standard value: 1.4 - 2.6 kΩ**

Purchased from www.WorkshopManuals.co.uk

www.WorkshopManuals.co.uk

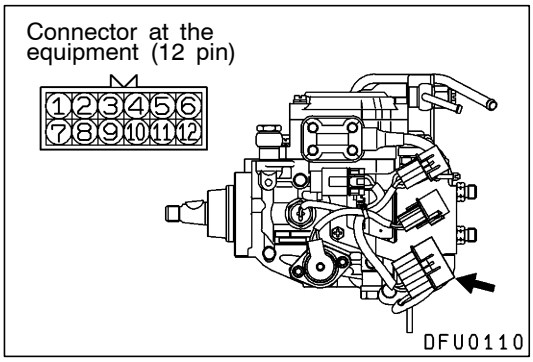


### CONTROL SLEEVE POSITION SENSOR CHECK

1. Disconnect the injection pump connector (12 pin).
2. Measure the resistance between the following terminals.

**Standard value:**

| | |
|---|---|
| Terminal No. 4 - Terminal No. 12 | 11.2 - 12.4 Ω |
| Terminal No. 4 - Terminal No. 8 | 5.6 - 6.2 Ω |
| Terminal No. 8 - Terminal No. 12 | 5.6 - 6.2 Ω |

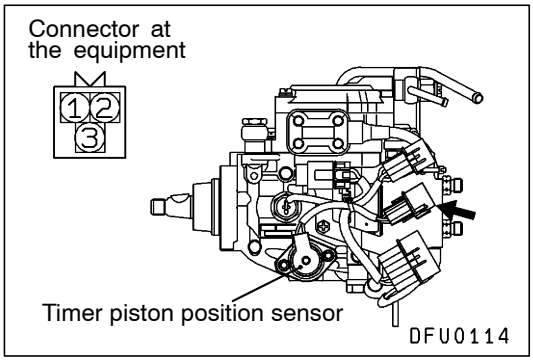


### TIMER PISTON POSITION SENSOR CHECK

1. Disconnect the timer piston position sensor connector.
2. Measure the resistance between the following terminals.

**Standard value:**

| | |
|---|---|
| Terminal No. 1 - Terminal No. 2 | 160 - 168 Ω |
| Terminal No. 1 - Terminal No. 3 | 80 - 84 Ω |
| Terminal No. 2 - Terminal No. 3 | 80 - 84 Ω |

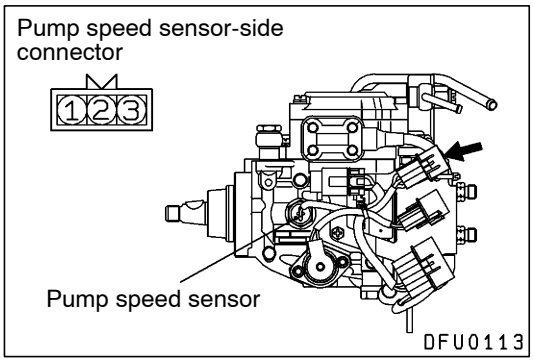


### PUMP SPEED SENSOR CHECK

1. Disconnect the pump speed sensor connector.
2. Measure the resistance between terminals No. 1 and No. 2.

**Standard value: 1.36 - 1.84 kΩ**

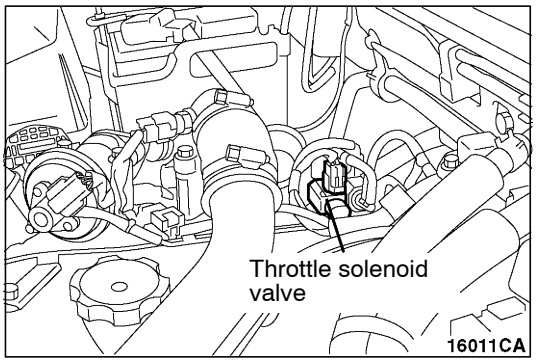


## THROTTLE SOLENOID VALVE CHECK

### INSPECTION PROCEDURE

1. Disconnect the vacuum hose (black and yellow stripe) from the solenoid valve.
2. Disconnect the harness connector.

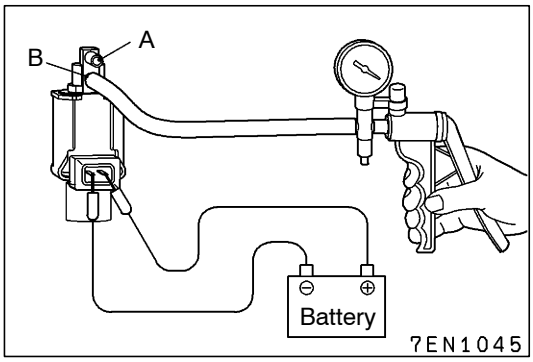


3. Install a hand vacuum pump to solenoid valve nipple B.
4. Use jumper leads to connect the solenoid valve terminals and the battery terminals.
5. Disconnect the jumper lead from the battery (-) terminal, and then apply negative pressure to check the air-tightness.

Purchased from www.WorkshopManuals.co.uk

www.WorkshopManuals.co.uk

**Standard value:**

| Jumper lead | Nipple A | Normal condition |
|---|---|---|
| Connected | Open | Negative pressure leaks |
| | Closed | Negative pressure maintained |
| Disconnected | Open | Negative pressure maintained |

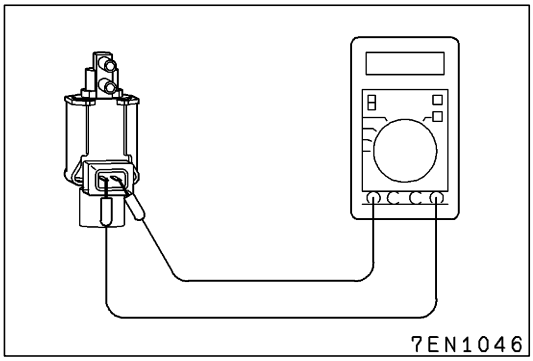


### COIL RESISTANCE CHECK

1. Measure the resistance between the solenoid valve terminals.

   **Standard value: 29 - 35 Ω (at 20°C)**

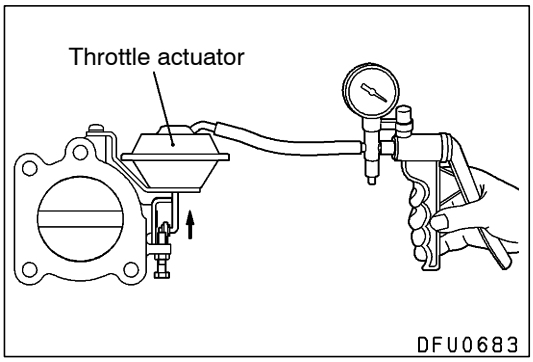


## THROTTLE ACTUATOR CHECK

1. Remove the vacuum hose (yellow stripe) from the throttle actuator and connect a hand vacuum pump to the throttle actuator nipple.
2. Check that the actuator rod moves smoothly when applying vacuum gradually.
   Also, check that the vacuum is maintained when applying 53 kPa of vacuum.

## VARIABLE GEOMETRY SOLENOID VALVE CHECK

Refer to GROUP 15 - On-vehicle Service.

## EGR CONTROL SOLENOID VALVE CHECK

Refer to GROUP 17 - Emission Control System <4D5-step III>.

Purchased from www.WorkshopManuals.co.uk

www.WorkshopManuals.co.uk

# FUEL INJECTION NOZZLE

## REMOVAL AND INSTALLATION

Refer to GROUP 13C of the 2001 PAJERO Workshop Manual {Pub. No. PWJE0001 (1/2)}

# FUEL INJECTION PUMP

## REMOVAL AND INSTALLATION

**Pre-removal Operation**
- Engine Coolant Draining.
- Battery and Battery Tray Removal
- Timing Belt Removal (Refer to GROUP 11B.)
- Air Pipe Removal (Refer to GROUP 15 - Intake and Exhaust Manifold, Turbocharger <4D5>.)

**Post-installation Operation**
- Air Pipe Installation (Refer to GROUP 15 - Intake and Exhaust Manifold, Turbocharger <4D5>.)
- Timing Belt Installation (Refer to GROUP 11B.)
- Battery and Battery Tray Installation
- Engine Coolant Supplying.
- Injection Timing Adjustment (Refer to GROUP 11B - On-vehicle Service.)

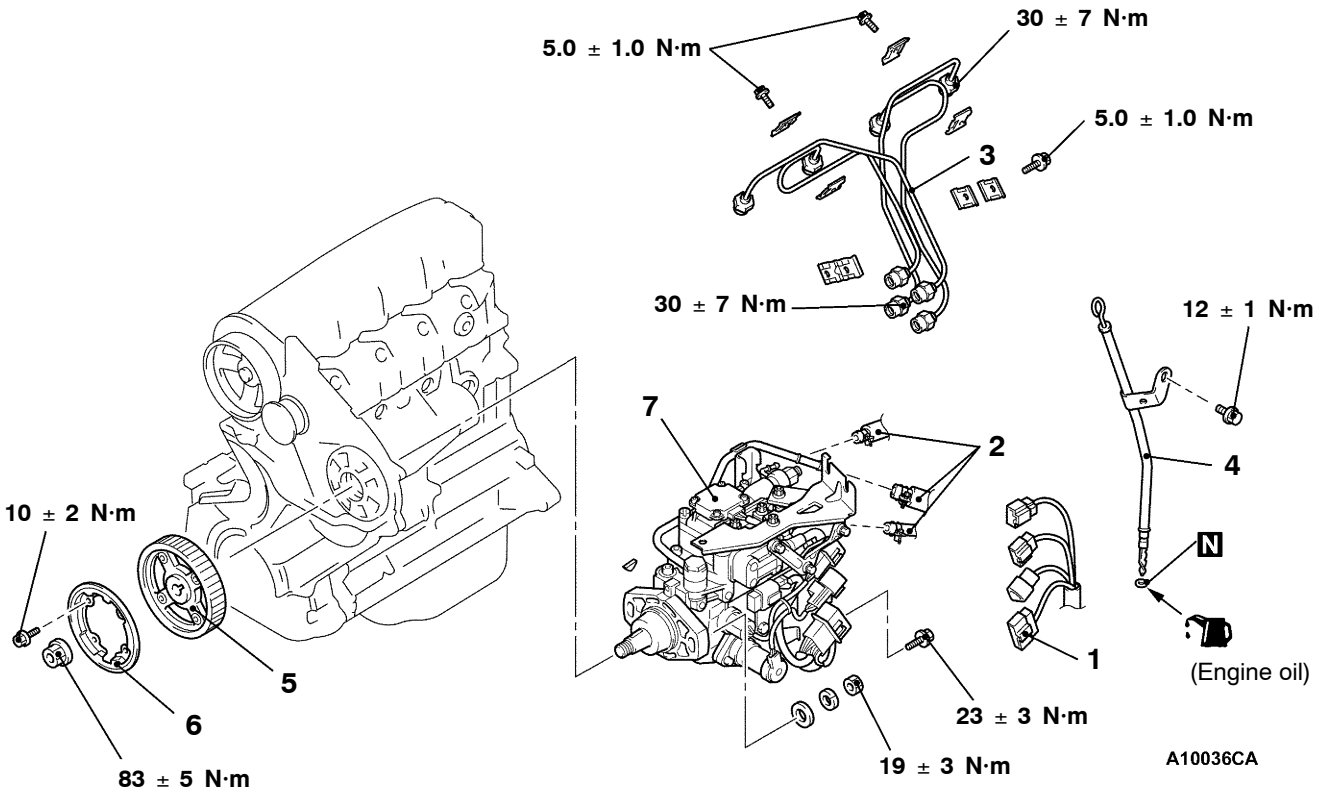


**Removal steps**

1. Fuel injection pump connector
2. Fuel hoses connection
3. Fuel injection pipe
4. Engine oil level gauge guide and oil level gauge assembly

◀A▶

◀B▶

5. Fuel injection pump sprocket
6. Flange
7. Fuel injection pump

Purchased from www.WorkshopManuals.co.uk

www.WorkshopManuals.co.uk

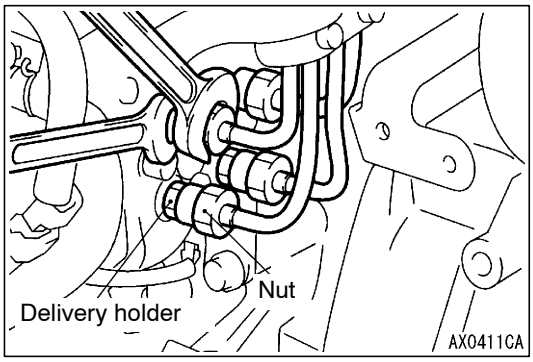


## REMOVAL SERVICE POINTS

### ◀A▶ INJECTION PIPE REMOVAL

Loosen the nuts at the end of the injection pipe with the delivery holder (for pump side) and injection nozzle assembly (for nozzle side) retained by a spanner, etc.

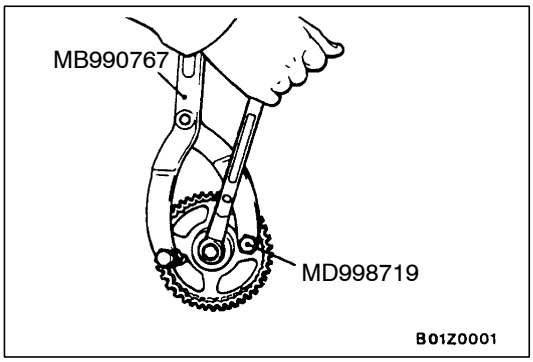


### ◀B▶ FUEL INJECTION PUMP SPROCKET REMOVAL

1. Use the special tool to stop the fuel injection pump sprocket from turning, and remove the fuel injection pump sprocket mounting bolt.

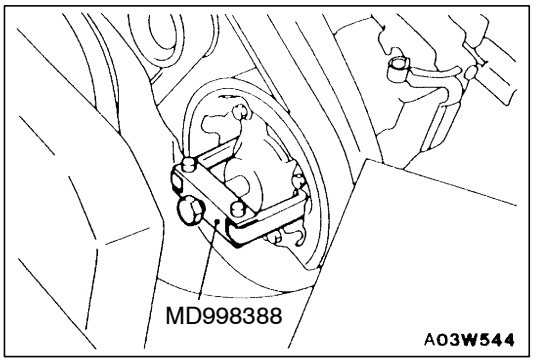


2. Use the special tool to remove the fuel injection pump sprocket.

   **Caution**
   **(1) Do not hit pump drive shaft with hammer, etc.**
   **(2) When holding injection pump, do not allow to dangle by holding accelerator lever or fast idle lever.**
   **Do not remove these levers. Removal will cause injection pump malfunction.**

Purchased from www.WorkshopManuals.co.uk

www.WorkshopManuals.co.uk

# CRANKSHAFT POSITION SENSOR

## REMOVAL AND INSTALLATION

**Pre-removal and Post-installation Operation**
- Timing Belt Cover Removal and Installation (Refer to GROUP 11B.)

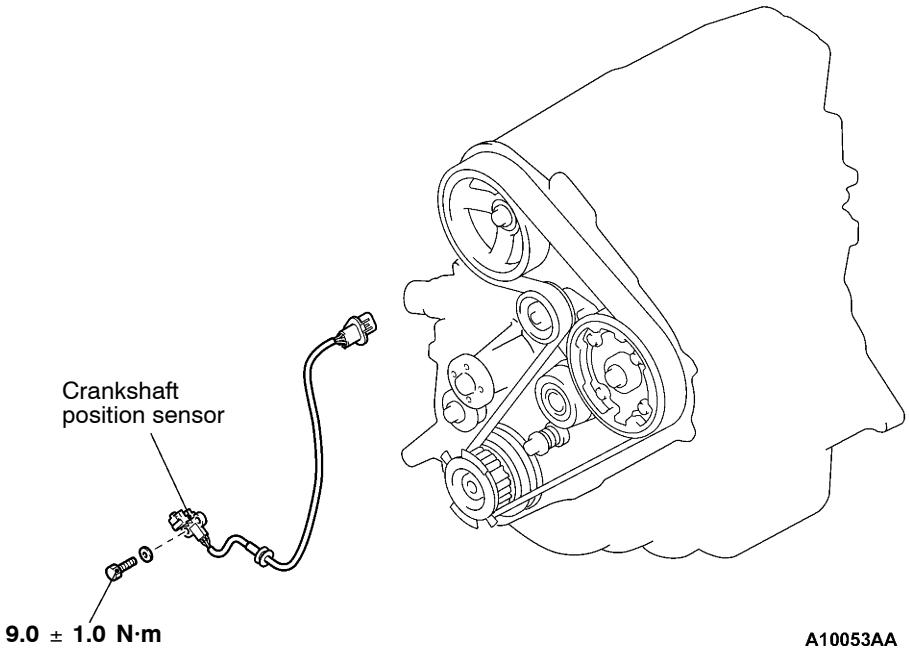


# ENGINE-ECU

## REMOVAL AND INSTALLATION

Removal and installation is the same as for 6G7 engine or 4M4 engine. Refer to GROUP 13A or 13C of the 2001 PAJERO Workshop Manual {Pub. No. PWJE0001 (1/2)}

Purchased from www.WorkshopManuals.co.uk

www.WorkshopManuals.co.uk

# MITSUBISHI STABILITY CONTROL (MITSUBISHI SC)

**Click on the applicable bookmark to selected the required model year.**

Purchased from www.WorkshopManuals.co.uk

www.WorkshopManuals.co.uk


# MITSUBISHI STABILITY CONTROL (MITSUBISHI SC)

## CONTENTS


**GENERAL INFORMATION . . . . . 2**

**SERVICE SPECIFICATIONS . . . . . 4**

**SPECIAL TOOLS . . . . . 4**

**TROUBLESHOOTING . . . . . 5**

**ON-VEHICLE SERVICE . . . . . 18**

Operation Test of MITSUBISHI SC . . . . . 18

Wheel Speed Sensor (FR) Check . . . . . 18

Vehicle Speed Sensor Check . . . . . 18

**SC-ECU* . . . . . 19**

**G SENSOR . . . . . 20**

**WHEEL SPEED SENSOR (FR) . . . . . 20**

**VEHICLE SPEED SENSOR . . . . . 20**


**WARNINGS REGARDING SERVICING OF SUPPLEMENTAL RESTRAINT SYSTEM (SRS) EQUIPPED VEHICLES**

**WARNING!**

**(1) Improper service or maintenance of any component of the SRS, or any SRS-related component, can lead to personal injury or death to service personnel (from inadvertent firing of the air bag) or to the driver and passenger (from rendering the SRS inoperative).**

**(2) Service or maintenance of any SRS component or SRS-related component must be performed only at an authorized MITSUBISHI dealer.**

**(3) MITSUBISHI dealer personnel must thoroughly review this manual, and especially its GROUP 52B - Supplemental Restraint System (SRS) before beginning any service or maintenance of any component of the SRS or any SRS-related component.**

NOTE

The SRS includes the following components: front impact sensors, SRS-ECU, SRS warning lamp, air bag module, clock spring and interconnecting wiring. Other SRS-related components (that may have to be removed/installed in connection with SRS service or maintenance) are indicated in the table of contents by an asterisk (*).

Purchased from www.WorkshopManuals.co.uk

www.WorkshopManuals.co.uk

# GENERAL INFORMATION

The MITSUBISHI Stability Control (MITSUBISHI SC) system, which compensates for an unsafe driving by controlling the engine output (i.e., traction control), has been introduced.
The MITSUBISHI SC judges that the vehicle is unstable via the lateral gravity sensor.
Then the system will control the engine output, based on the vehicle speed and the throttle opening angle.
In addition, if the system fails, the SC warning lamp inside the combination meter will illuminate or flash to warn the driver.

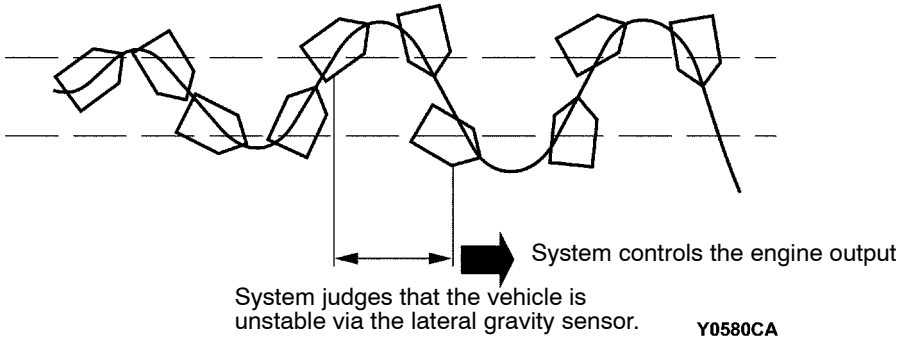


## System Diagram

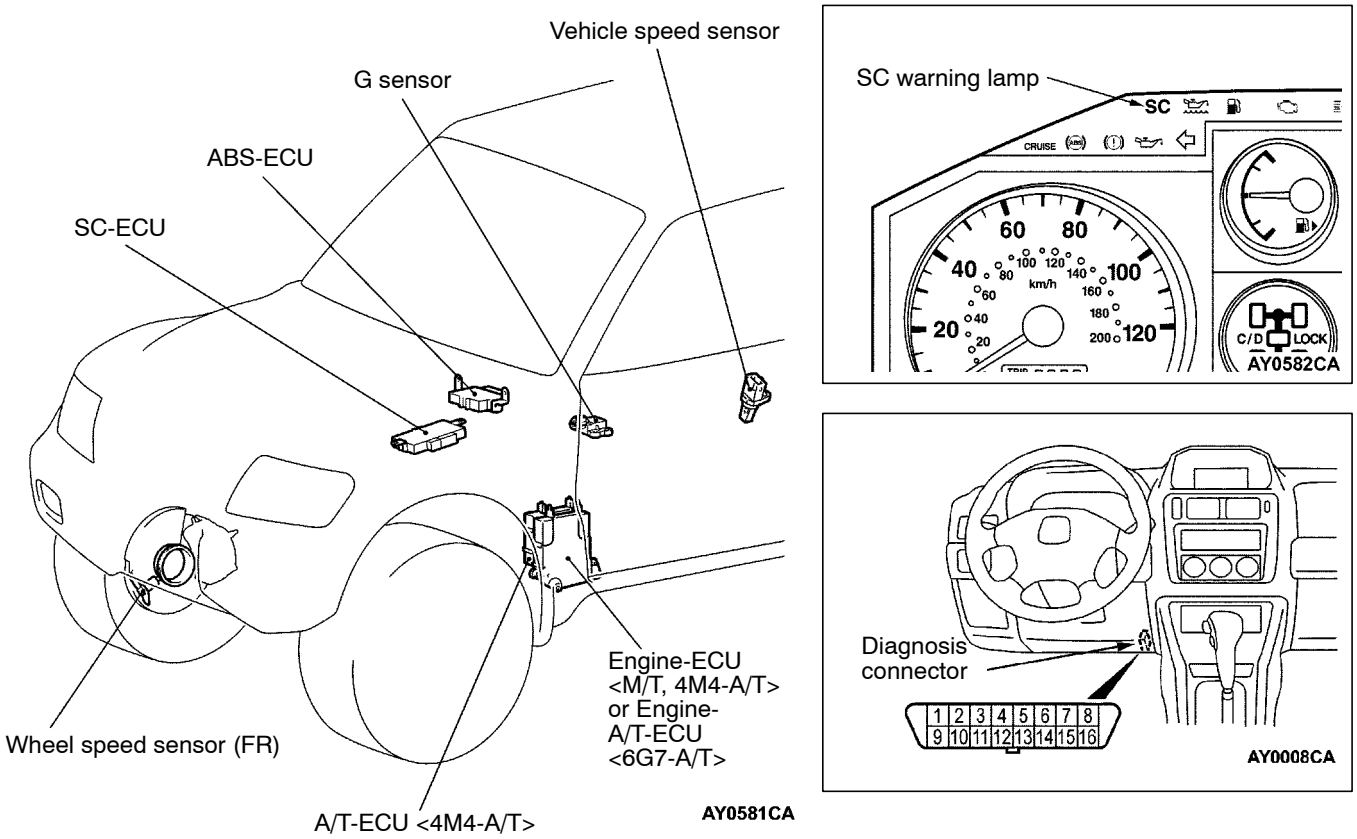


Purchased from www.WorkshopManuals.co.uk

www.WorkshopManuals.co.uk

## System Circuit Diagram

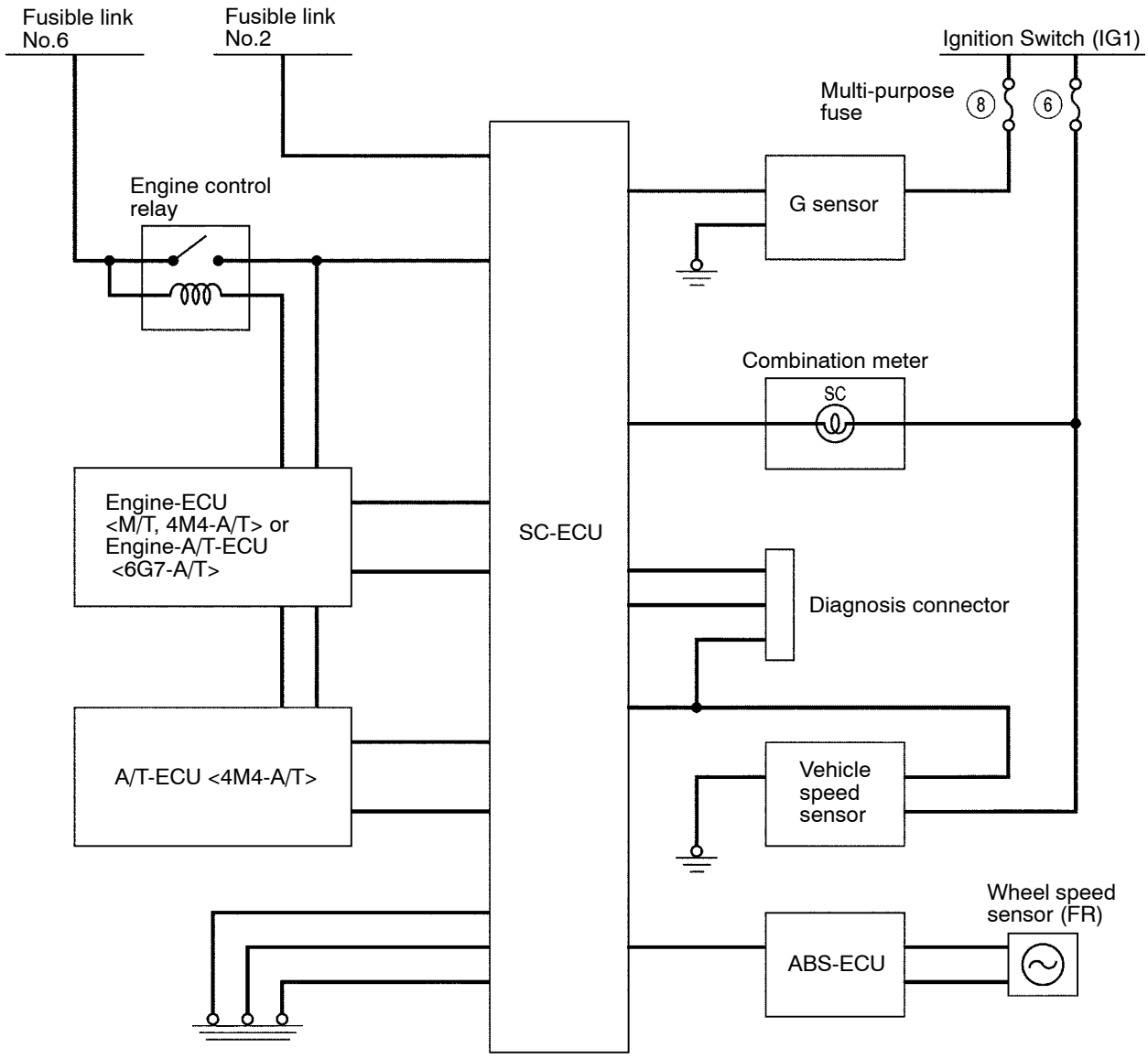


Y0587CA

Purchased from www.WorkshopManuals.co.uk

www.WorkshopManuals.co.uk

### MAJOR COMPONENT REFERENCE TABLE

| Components | Functions |
|---|---|
| SC-ECU | Receives signals from various sensors, and transmits an engine output control signal to the engine-ECU or engine-A/T-ECU, based on the information. |
| Engine-ECU <M/T, 4M4-A/T> | Transmits the engine information (such as APS signal and engine speed), which is required for control the Mitsubishi SC, to the SC-ECU. |
| | Compensate for the engine output according to the current engine condition on request from the SC-ECU. |
| Engine-A/T-ECU <6G7-A/T> | • Transmits the engine information (such as APS signal and engine speed), which is required for controlling the Mitsubishi SC, to the SC-ECU.<br>• Transmits the transmission information (such as shift position), which is required for controlling the Mitsubishi SC, to the SC-ECU. |
| | Compensate for the engine output according to the current engine condition on request from the SC-ECU. |
| A/T-ECU <4M4-A/T> | Transmits the transmission information (such as shift position), which is required for controlling the Mitsubishi SC, to the SC-ECU. |
| ABS-ECU | Transmits the wheel speed sensor (FR) signal to the SC-ECU. |
| G sensor | Measures the vehicle lateral gravity, and transmit the information to the SC-ECU as a voltage signal. |
| Vehicle speed sensor | Transmits the vehicle speed (transmission output gear speed) signal to the SC-ECU. |
| SC warning lamp | Illuminates or flashes when the SC-ECU transmits a signal indicating the system error. |
| Diagnosis connector | When a diagnosis code is set, the MUT-II communicates with the system via this connector. |

## SERVICE SPECIFICATIONS

| Items | | Standard value |
|---|---|---|
| G sensor output voltageV | When the vehicle is stationary | 2.35 - 2.65 |
| | When an arrow on the G sensor label is facing down | 3.3 - 3.7 |

## SPECIAL TOOLS

| Tools | No. | Name | Application |
|---|---|---|---|
| 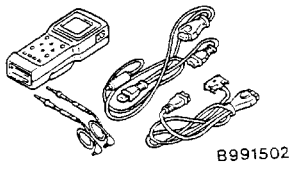 B991502 | MB991502 | MUT-II sub assembly | Checking the MITSUBISHI SC (Diagnosis display using the MUT-II) |
| 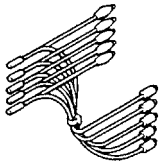 B991348 | MB991348 | Test harness set | Checking the G sensor |

Purchased from www.WorkshopManuals.co.uk

www.WorkshopManuals.co.uk

# TROUBLESHOOTING

## STANDARD FLOW OF DIAGNOSTIC TROUBLESHOOTING

Refer to Basic Manual GROUP 00 - How to Use Troubleshooting/Inspection Service Points.

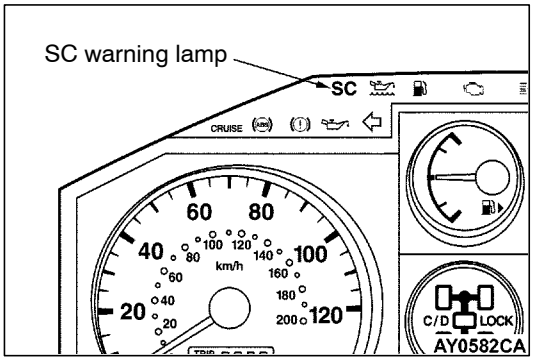


## SC WARNING LAMP INSPECTION

Check that the SC warning lamp illuminates as follows.

1. When the ignition key is turned to “ON”, the SC warning lamp will illuminate.
2. When the engine is started, the SC warning lamp will be switched off.
3. If the illumination is other than the above, check the diagnosis codes.

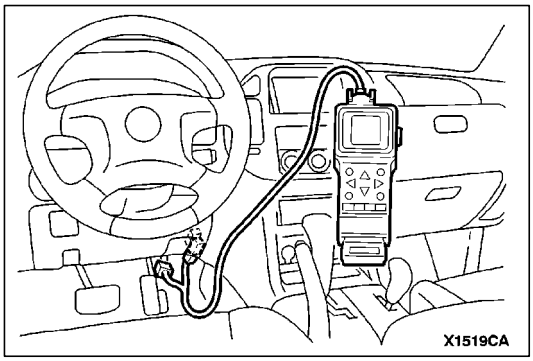


## DIAGNOSIS FUNCTION

### METHOD OF READING DIAGNOSIS CODES

### WHEN USING THE MUT-II

Connect the MUT-II to the diagnosis connector and take a reading of the diagnosis codes.

**Caution**
**Turn the ignition switch to “LOCK” (OFF) position before connecting or disconnecting the MUT-II.**

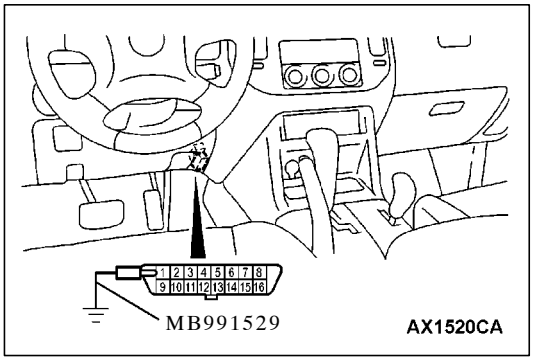


### WHEN USING THE WARNING LAMP

1. Use the special tool to earth No.1 terminal (diagnosis control terminal) of the diagnosis connector.
2. Turn on the ignition switch.
3. Read out a diagnosis code by observing how the warning lamp flashes.
   (Refer to Basic Manual GROUP 00 - How to Use Troubleshooting/Inspection Service Points.)

### ERASING DIAGNOSIS CODES

Connect the MUT-II to the diagnosis connector and erase the diagnosis codes.

**Caution**
**Turn the ignition switch to “LOCK” (OFF) position before connecting or disconnecting the MUT-II.**

Purchased from www.WorkshopManuals.co.uk

www.WorkshopManuals.co.uk

## INSPECTION CHART FOR DIAGNOSIS CODES

| Diagnosis code No. | Diagnosis item | SC warning lamp | Reference page |
|---|---|---|---|
| 27*1 | SC-ECU power supply system (abnormal voltage drop) | Flashes | 13E-6 |
| 51*2 | Vehicle speed sensor wheel speed sensor system (output signal abnormality) | Flashes | 13E-7 |
| 52 | Vehicle speed sensor system (open circuit or short-circuit) | Flashes | 13E-8 |
| 53*2 | Wheel speed sensor system (open circuit or short-circuit) | Flashes | 13E-8 |
| 55*2 | G sensor system | Flashes | 13E-9 |
| 71 | Communication line between the engine-ECU or engine-A/T-ECU and the system | Flashes | 13E-10 |
| 72 | Engine-ECU or Engine-A/T-ECU system | Illuminates | 13E-10 |
| 74*2 | Communication line between the A/T-ECU and the system <4M4-A/T> | Flashes | 13E-11 |
| 81*1 | The SC-ECU is controlling the system too long | Flashes | 13E-11 |

NOTE
*1: Code No.27 and 81 are erased from the memory if the condition returns to normal.
*2: For code Nos.51, 53, 55 and 74, a diagnosis code will be set in ten seconds after a failure is detected.

## INSPECTION PROCEDURE FOR DIAGNOSIS CODE

| **Code No. 27 SC-ECU power supply system (abnormal voltage drop)** | **Probable cause** |
|---|---|
| This diagnosis code will be set if the SC-ECU power supply voltage drops below a certain level. | • Malfunction of battery<br>• Malfunction of harness or connector<br>• Malfunction of the SC-ECU |

**Caution**
**If the system voltage drops during inspection, this code will be output to indicate a current problem. And correct problem diagnosis will not be possible. Before carrying out the following procedure, check the battery and recharge it if necessary.**

Purchased from www.WorkshopManuals.co.uk

www.WorkshopManuals.co.uk

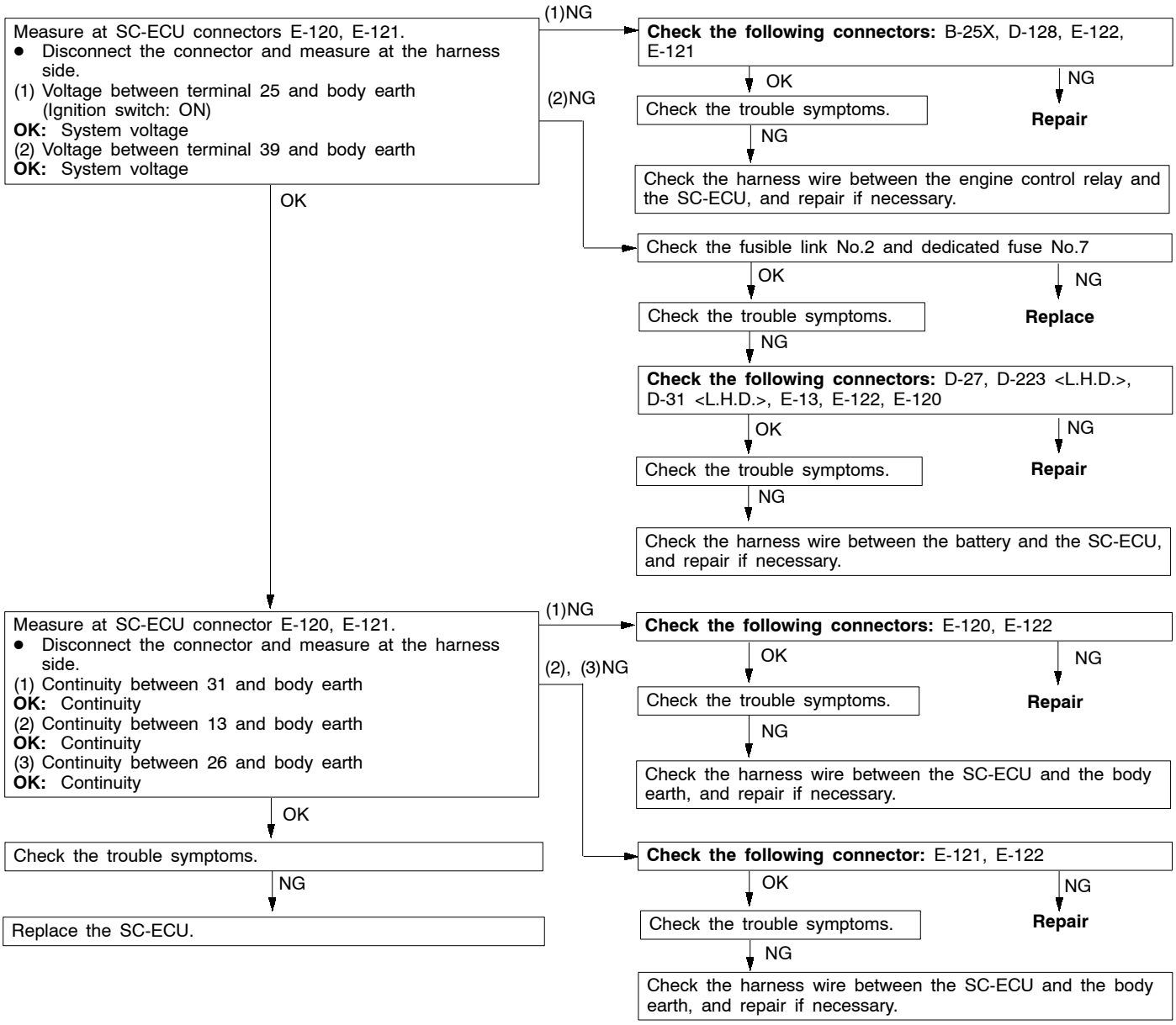


| Code No. 51 Vehicle speed sensor system | Probable cause |
|---|---|
| This diagnosis code will be set when the vehicle speed signal from the vehicle speed sensor is not the same as that from the wheel speed sensor (FR). | ● Malfunction of vehicle speed sensor system<br>● Malfunction of wheel speed sensor system<br>● Malfunction of the SC-ECU |

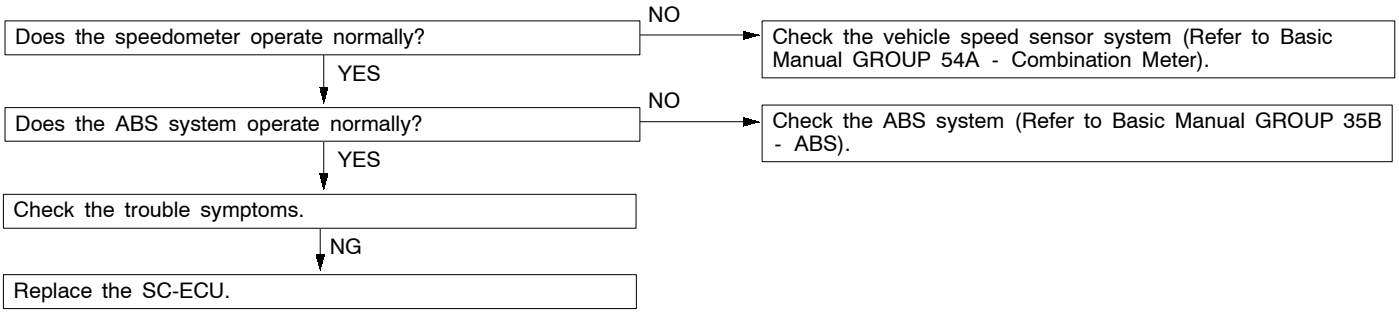


Purchased from www.WorkshopManuals.co.uk

www.WorkshopManuals.co.uk

| Code No. 52 Vehicle speed sensor system (open circuit or short-circuit) | Probable cause |
|---|---|
| This diagnosis code will be set when the vehicle speed sensor does not send vehicle speed signal to the SC-ECU. | • Malfunction of vehicle speed sensor<br>• Malfunction of harness or connector<br>• Malfunction of the SC-ECU |

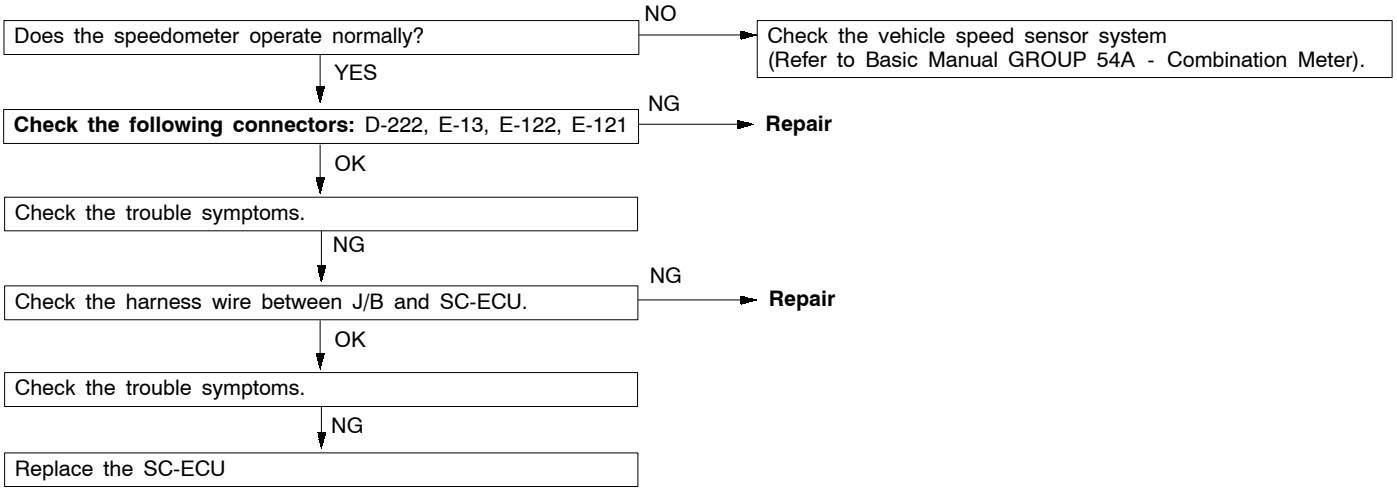


| Code No. 53 Wheel speed sensor system (open circuit or short-circuit) | Probable cause |
|---|---|
| This code is output when the open circuit or short-circuit detection carried out by the ABS-ECU hardware circuit detects that there is an open circuit or short-circuit in the (+) or (-) wire in one of the four wheel speed sensors and signals are consequently not being input. | • Malfunction of wheel speed sensor<br>• Malfunction of harness or connector<br>• Malfunction of the ABS-ECU |

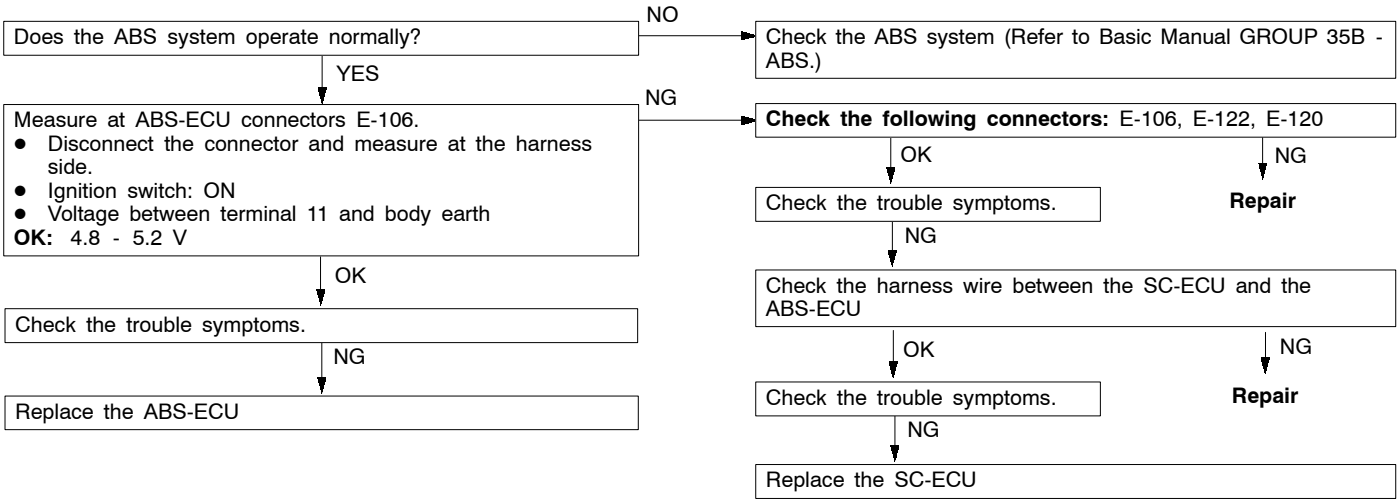


Purchased from www.WorkshopManuals.co.uk

www.WorkshopManuals.co.uk

| Code No. 55 G sensor system | Probable cause |
|---|---|
| This code is output at the following cases:<br>● When the G sensor output is lower than 0.5 V or higher than 4.5 V (Open circuit or short-circuit in G sensor circuit)<br>● When there is no variation in the G sensor output voltage (G sensor output seized) | ● Malfunction of G sensor<br>● Malfunction of harness or connector<br>● Malfunction of the SC-ECU |

Measure at G sensor connector E-123.
- Disconnect the connector and measure at the harness side.

(1) Voltage between terminal 1 and body earth (Ignition switch: ON)
**OK:** System voltage
(2) Continuity between terminal 3 and body earth
**OK:** Continuity

(1)NG → **Check the following connectors:** D-208, D-213, D-32, E-115, E-123
- OK → Check the trouble symptoms.
  - NG → Check the harness wire, and repair if necessary.
    - Between ignition switch and G sensor
- NG → **Repair**

(2)NG → **Check the following connectors:** E-123
- OK → Check the trouble symptoms.
  - NG → Check the harness wire, and repair if necessary.
    - Between the G sensor and body earth
- NG → **Repair**

OK ↓

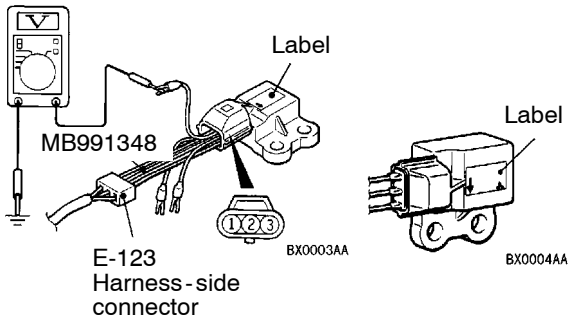


- Remove the G sensor (Refer to P.13E-19).
- Connect the special tool between the G sensor harness-side connector E-123 and the G sensor.
- Ignition switch: ON
- Voltage between terminal 2 and body earth when the G sensor is placed on a level surface

**OK:** 2.35 - 2.65 V
- Voltage between terminal 2 and body earth when the G sensor is placed so that the label is facing straight up

**OK:** 3.3 - 3.7 V

NG → Replace the G sensor.

OK ↓

**Check the following connectors:** E-123, E-113, E-122, E-121
- NG → **Repair**
- OK ↓

Check the trouble symptoms.
- NG ↓

Check the harness wire between the G sensor and SC-ECU
- NG → **Repair**
- OK ↓

Check the trouble symptoms.
- NG ↓

Replace the SC-ECU.

Purchased from www.WorkshopManuals.co.uk

www.WorkshopManuals.co.uk

| Code No. 71 Communication line between the engine-ECU or engine-A/T-ECU and the system | Probable cause |
|---|---|
| This diagnosis code will be set when an error takes place due to the open or short circuit in the serial communication line between the SC-ECU and the engine-ECU or engine-A/T-ECU, internal failure in the ECU or improper shield line. | • Malfunction of harness or connector<br>• Malfunction of engine-ECU or engine-A/T-ECU<br>• Malfunction of the SC-ECU |

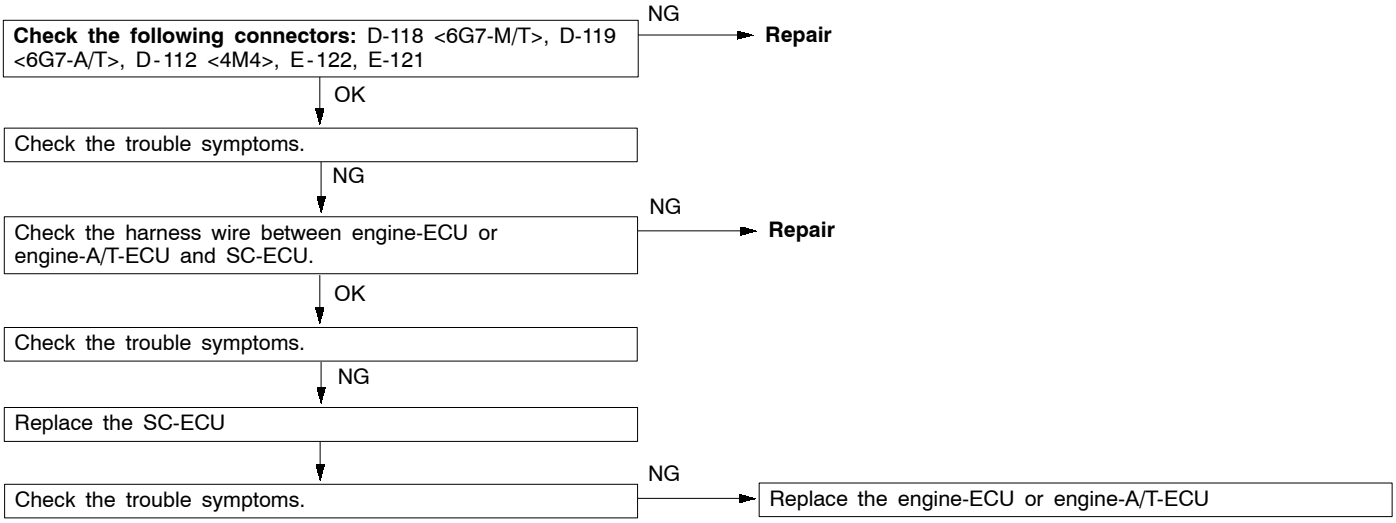


| Code No. 72 Engine-ECU or Engine-A/T-ECU system | Probable cause |
|---|---|
| This diagnosis code will be set when the engine-ECU or engine-A/T-ECU detects a system failure. On the GDI system <6G7> or diesel fuel system <4M4>, the system failure is transmitted from the engine-ECU or engine-A/T-ECU via a scenical communication line to the SC-ECU. | • Malfunction of GDI system <6G7><br>• Malfunction of diesel fuel system <4M4> |

- Carry out the troubleshooting regarding the GDI system. <6G7> (Refer to Basic Manual GROUP 13A - Troubleshooting.)
- Carry out the troubleshooting regarding the diesel fuel system. <4M4> (Refer to Basic Manual GROUP 13C - Troubleshooting.)

Purchased from www.WorkshopManuals.co.uk

www.WorkshopManuals.co.uk

| Code No. 74 Communication line between the A/T-ECU and the system <4M4-A/T> | Probable cause |
|---|---|
| This diagnosis code will be set when an error takes place due to the open or short circuit in the serial communication line between the SC-ECU and the A/T-ECU, internal failure in the ECU or improper shield line. | • Malfunction of harness or connector<br>• Malfunction of A/T-ECU<br>• Malfunction of the SC-ECU |

**Check the following connectors:** D-109, E-122, E-121 — NG → **Repair**

OK ↓

Check the trouble symptoms.

NG ↓

Check the harness wire between A/T-ECU and SC-ECU. — NG → **Repair**

OK ↓

Check the trouble symptoms.

NG ↓

Replace the SC-ECU

↓

Check the trouble symptoms. — NG → Replace the A/T-ECU

| Code No. 81 The SC-ECU is controlling the system too long | Probable cause |
|---|---|
| This diagnosis code will be set when the SC-ECU is controlling the system for 20 seconds or more. | • Malfunction of G sensor<br>• Malfunction of SC-ECU |

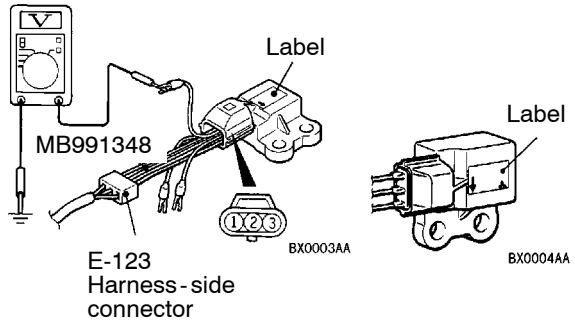


- Remove the G sensor (Refer to P.13E-19).
- Connect the special tool between the G sensor harness-side connector E-123 and the G sensor.
- Ignition switch: ON
- Voltage between terminal 2 and body earth when the G sensor is placed on a level surface

**OK:** 2.3.5 - 2.6.5 V

- Voltage between terminal 2 and body earth when the G sensor is placed so that the label is facing straight up

**OK:** 3.3 - 3.7 V

NG → Replace the G sensor.

OK ↓

Replace the SC-ECU

Purchased from www.WorkshopManuals.co.uk

www.WorkshopManuals.co.uk

## INSPECTION CHART FOR TROUBLE SYMPTOMS

| Trouble Symptom | Inspection procedure No. | Reference page |
|---|---|---|
| Communication with MUT-II is not possible. | 1 | 13E-12 |
| Communication with MUT-II and the SC-ECU is not possible. | 2 | 13E-13 |
| The SC warning lamp does not illuminate when the ignition key is turned to ON (engine stopped). | 3 | 13E-14 |
| The SC warning lamp remains illuminated after the engine has started. | 4 | 13E-14 |

## INSPECTION PROCEDURES FOR TROUBLE SYMPTOMS

### Inspection procedure 1

| Communication with MUT-II is not possible. | Probable cause |
|---|---|
| The cause is probably a malfunction of the diagnosis connector power supply circuit or earth circuit. | ● Malfunction of diagnosis connector<br>● Malfunction of harness or connector |

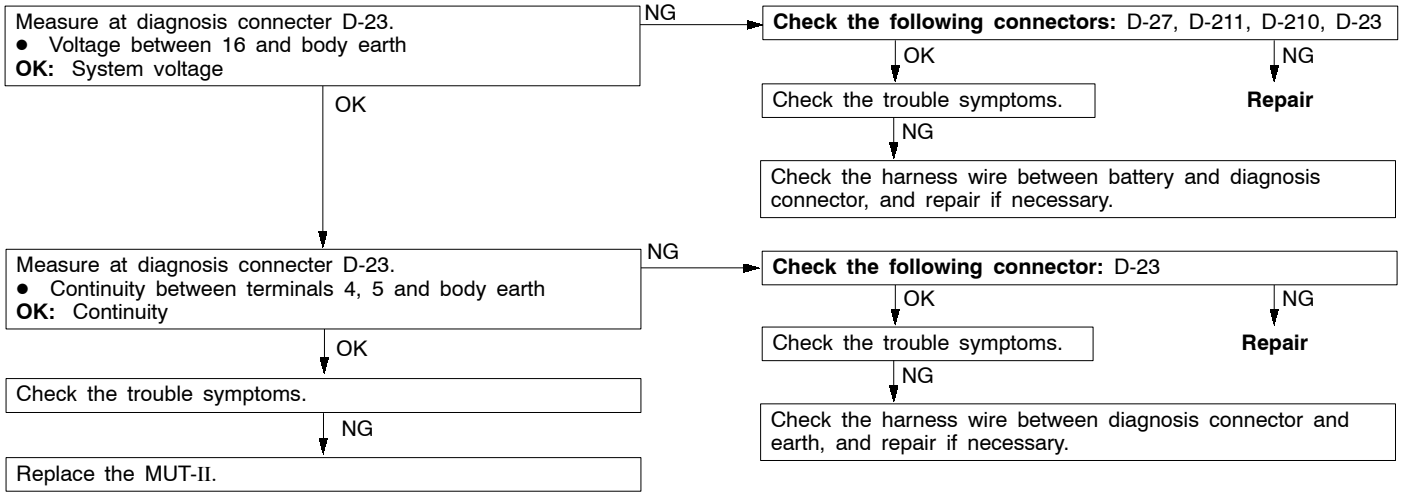


Purchased from www.WorkshopManuals.co.uk

www.WorkshopManuals.co.uk

## Inspection procedure 2

| Communication with MUT-II and the SC-ECU is not possible. | Probable cause |
|---|---|
| The cause is probably an open circuit in the SC-ECU power supply circuit or an open circuit in the diagnosis output circuit. | ● Malfunction of harness or connector<br>● Malfunction of the SC-ECU |

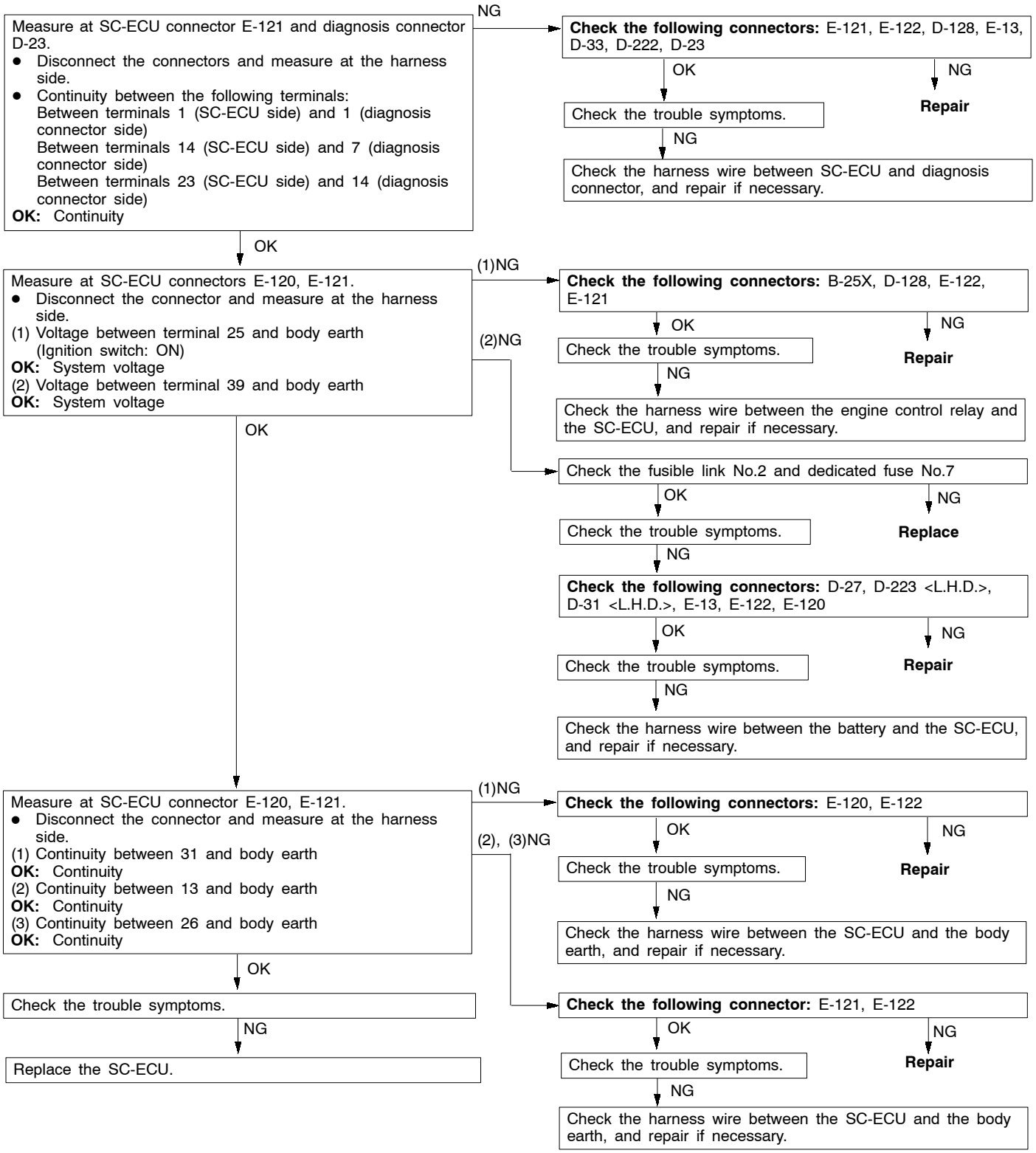


Purchased from www.WorkshopManuals.co.uk

www.WorkshopManuals.co.uk

## Inspection procedure 3

| The SC warning lamp does not illuminate when the ignition key is turned to ON (engine stopped). | Probable cause |
|---|---|
| When the ignition switch is turned on, the SC-ECU starts to communicate with the engine-ECU or engine-A/T-ECU. Then the SC-ECU will illuminate the SC warning lamp if the engine speed is 350 rpm or less. If the SC warning lamp does not illuminate, the case is probably an open circuit in the SC warning lamp power supply circuit, a blow lamp bulb or an open circuit between the SC warning lamp and the SC-ECU. | • Blown fuse<br>• Blown SC warning lamp bulb<br>• Malfunction of harness or connector<br>• Malfunction of combination meter<br>• Malfunction of the SC-ECU |

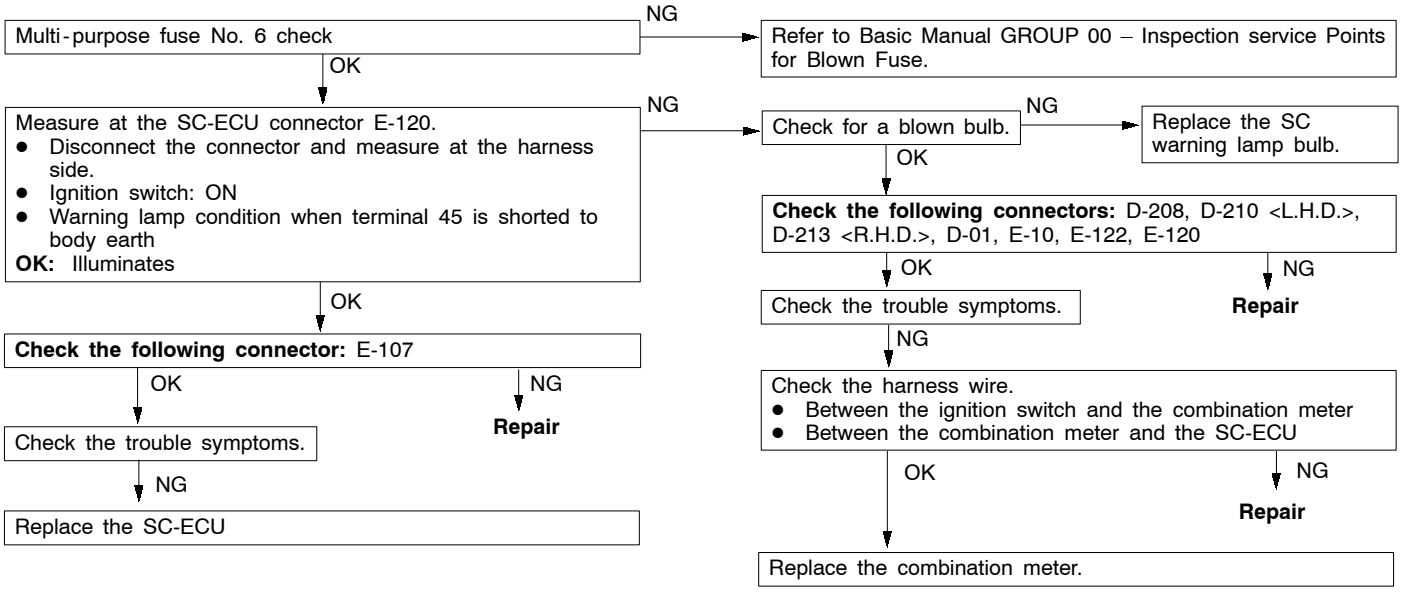


## Inspection procedure 4

| The SC warning lamp remains illuminated after the engine has started. | Probable cause |
|---|---|
| The cause is probably a short-circuit in the SC warning lamp illumination circuit. | • Malfunction of combination meter<br>• Malfunction of harness (short-circuit)<br>• Malfunction of the SC-ECU |

NOTE
This trouble symptom is limited to cases where communication with the MUT-II is possible(SC-ECU power supply is normal) and the diagnosis code is a normal diagnosis code.

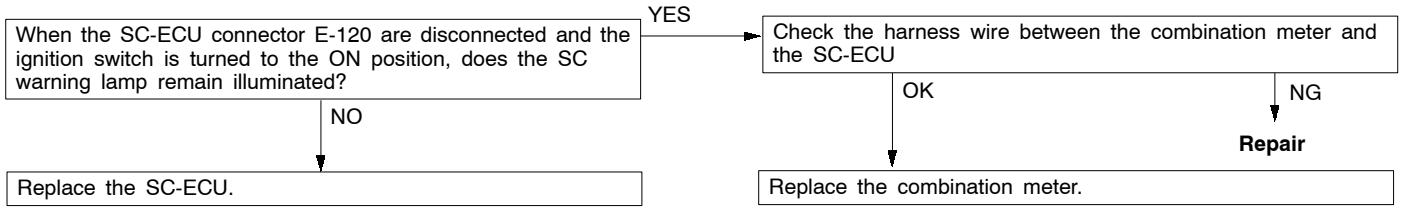


Purchased from www.WorkshopManuals.co.uk

www.WorkshopManuals.co.uk

## DATA LIST REFERENCE TABLE

The following ECU input data items can be read using the MUT-II.

| Item No. | Check item | Inspection conditions | | Normal condition |
|---|---|---|---|---|
| 10 | Vehicle speed | When vehicle is being driven | | Speedometer display and MUT-II display are identical. |
| 11 | Accelerator pedal position sensor | Ignition switch: ON | Release the accelerator pedal. | 0.9 - 1.1 V |
| | | | Depress the accelerator pedal gradually. | Increases in response to pedal depression stroke. |
| | | | Depress the accelerator pedal fully | 4.0 V or more |
| 18 | Power supply voltage | Ignition switch: ON | | System voltage |
| 19 | Accelerator pedal position switch (Idle switch) | Ignition switch: ON | Release the accelerator pedal | ON |
| | | | Depress the accelerator pedal slightly. | OFF |
| 20 | Ignition switch | Ignition switch: ON | | ON |
| | | Ignition switch: OFF | | OFF |
| 22 | Front-right wheel speed | When vehicle is being driven | | Speedometer display and MUT-II display are identical. |
| 28 | Engine type | Vehicles with the 6G74 engine | | 6G74 |
| | | Vehicles with the 4M41 engine | | 4M41 |
| 30 | Trace control | SC system control is active | | ON |
| | | SC system control is not active | | OFF |
| 31 | Engine specification 1 | Vehicles with the 6G74 engine | | DOHC |
| | | Vehicles with the 4M41 engine | | - |
| 32 | Engine specification 2 | Vehicles with the 6G74 engine | | N/A |
| | | Vehicles with the 4M41 engine | | - |
| 33 | Engine specification 3 | Vehicles with the 6G74 engine | | MIVEC/ETV |
| | | Vehicles with the 4M41 engine | | - |
| 35 | Destination | - | | EC |
| 40 | Engine speed | Depress the accelerator pedal gradually. | | Tachometer display and MUT-II display are identical. |
| 51 | Inhibitor switch | Ignition switch: ON<br>Engine: stopped | Selector lever position: P | P |
| | | | Selector lever position: R | R |
| | | | Selector lever position: N | N |
| | | | Selector lever position: D | D |
| 52 | Shift position | Selector lever position: sports mode | Driving at a constant speed of 10 km/h in 1st | 1st |
| | | | Driving at a constant speed of 30 km/h in 2nd | 2nd |
| | | | Driving at a constant speed of 50 km/h in 3rd | 3rd |
| | | | Driving at a constant speed of 50 km/h in 4th | 4th |
| | | | Driving at a constant speed of 70 km/h in 5th | 5th |

Purchased from www.WorkshopManuals.co.uk

www.WorkshopManuals.co.uk

| Item No. | Check item | Inspection conditions | Normal condition |
|---|---|---|---|
| 63 | G sensor | ● Ignition switch: ON<br>● When vehicle is stationary (level) | 2.35 - 2.65 V |
| | | When vehicle is being driven | 1.0 - 4.0 V |

## ACTUATOR TEST TABLE

The following actuators can be force-driven using the MUT-II.

NOTE
1. Actuator tests cannot be carried out when the operation of the SC-ECU has been stopped by the fail-safe function.
2. Actuator tests can only be carried out while the vehicle is stopped.

### ACTUATOR TEST SPECIFICATIONS

| Item No. | Check item | Drive Contents |
|---|---|---|
| 05 | Operation Test of MITSUBISHI SC | Transmits the signal, which requests no torque and wide open throttle, to the engine-ECU or engine-A/T-ECU for three seconds. |

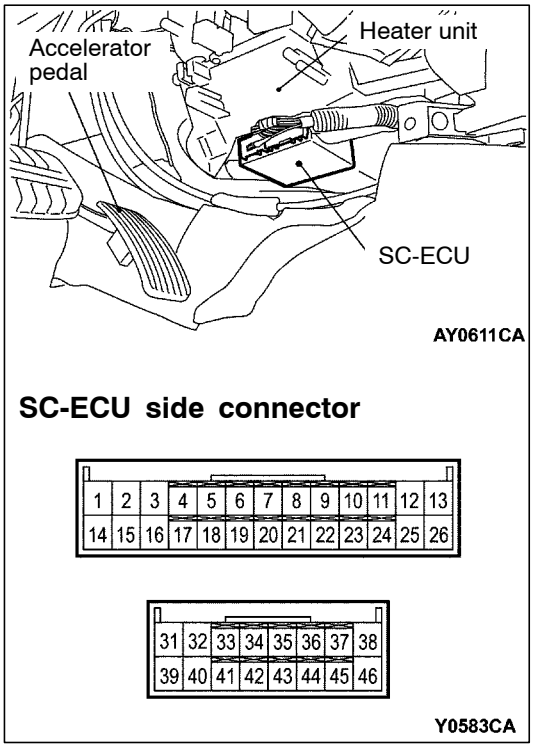


## CHECK AT SC-ECU TERMINAL

### TERMINAL VOLTAGE TABLE

1. Measure the voltages between the respective terminal and earth.
2. The terminal layout is shown in the illustration.

Purchased from www.WorkshopManuals.co.uk

www.WorkshopManuals.co.uk

| Terminal No. | Check item | Inspection conditions | | Normal condition |
|---|---|---|---|---|
| 1 | Diagnosis select input | When the MUT-II is connected | | 1 V or less |
| | | When the MUT-II is not connected | | Approx. 5 V |
| 14 | MUT-II | When the MUT-II is connected | | Serial communication with the MUT-II |
| | | When the MUT-II is not connected | | 1 V or less |
| 15, 16 | A/T-ECU <4M41-A/T> | Ignition switch: ON | | Serial communication with the SC-ECU |
| | | Ignition switch: OFF | | 0 V |
| 17, 18 | Engine-ECU <M/T, 6G74-M/T> or Engine-A/T-ECU <6G74-A/T> | Ignition switch: ON | | Serial communication with the SC-ECU |
| | | Ignition switch: OFF | | 0 V |
| 19 | G sensor input | Ignition switch: ON<br>Vehicle horizontal position | | 2.4 - 2.6 V |
| 21 | ABS-ECU [wheel speed sensor (FR)] input | Ignition switch: ON<br>Move the vehicle slowly forward | | 0 V and 5 V alternates |
| 23 | Vehicle speed sensor input | Ignition switch: ON<br>Move the vehicle slowly forward | | 0 V and 8 - 12 V alternates |
| 25 | SC-ECU power supply | Ignition switch: ON | | System voltage |
| | | Ignition switch: OFF | | 0 V |
| 39 | SC-ECU backup power supply | At all time | | System voltage |
| 45 | SC warning lamp output | Ignition switch: ON | When lamp is switched off | System voltage |
| | | | When lamp is illuminated | 2 V or less |

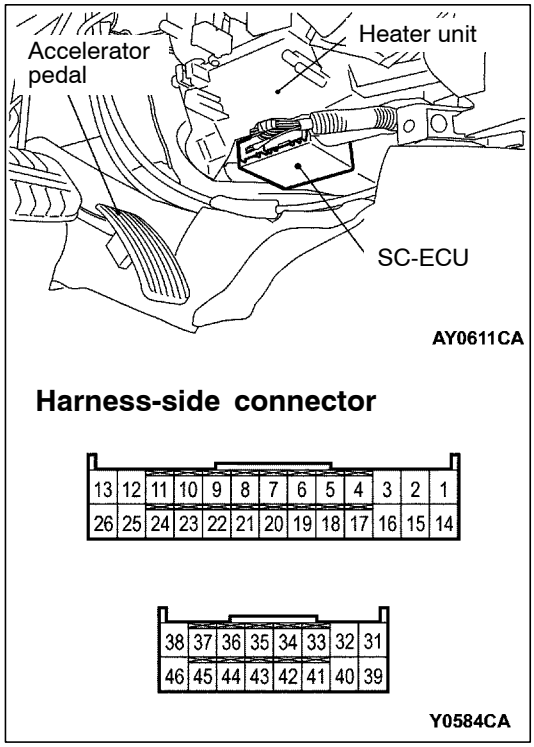


## CHECK CHART FOR RESISTANCE AND CONTINUITY BETWEEN TERMINALS

1. Turn the ignition switch to the LOCK (OFF) position.
2. Check the resistances and continuity with the SC-ECU connector disconnected.
3. Check the resistances and continuity between the terminals listed in the table below.
4. The terminal layout is shown in the illustration.

Purchased from www.WorkshopManuals.co.uk

www.WorkshopManuals.co.uk

| Terminal No. | Signal name | Normal condition |
|---|---|---|
| Between terminal 13 and body earth | Earth | Continuity |
| Between terminal 26 and body earth | Earth | |
| Between terminal 31 and body earth | Earth | |

# ON-VEHICLE SERVICE

## OPERATION TEST OF MITSUBISHI SC

1. Connect the MUT-II to the 16-pin diagnosis connector.

   **Caution**
   **Turn the ignition switch to the LOCK (OFF) position when connecting and disconnecting the MUT-II.**
2. Move the shift lever to the neutral <M/T>, or the selector lever to the P range.
3. Start the engine.
4. Use the MUT-II to activate the Actuator Test (item No.05) while depressing the accelerator pedal fully. Check that the engine speed should decrease gradually.

   **Caution**
   **Activate the Actuator Test for three seconds. Release the accelerator pedal immediately after the Actuator Test is complete, or the engine speed will rise.**

   NOTE
   During the Actuator Test, the SC-ECU transmits the signal, which requests no torque and wide open throttle, to the engine-ECU or engine-A/T-ECU for three seconds.

## WHEEL SPEED SENSOR (FR) CHECK

Refer to Basic Manual GROUP 35B - On-vehicle service.

## VEHICLE SPEED SENSOR CHECK

Refer to Basic Manual GROUP 54A - Combination Meter.

Purchased from www.WorkshopManuals.co.uk

www.WorkshopManuals.co.uk

# SC-ECU

## REMOVAL AND INSTALLATION

**Caution**
**When removing and installing the SC-ECU, do not let it bump against the SRS-ECU.**

**Pre-removal and Post-installation Operations**
Front floor console removal and installation
(Refer to Basic Manual GROUP 52A.)

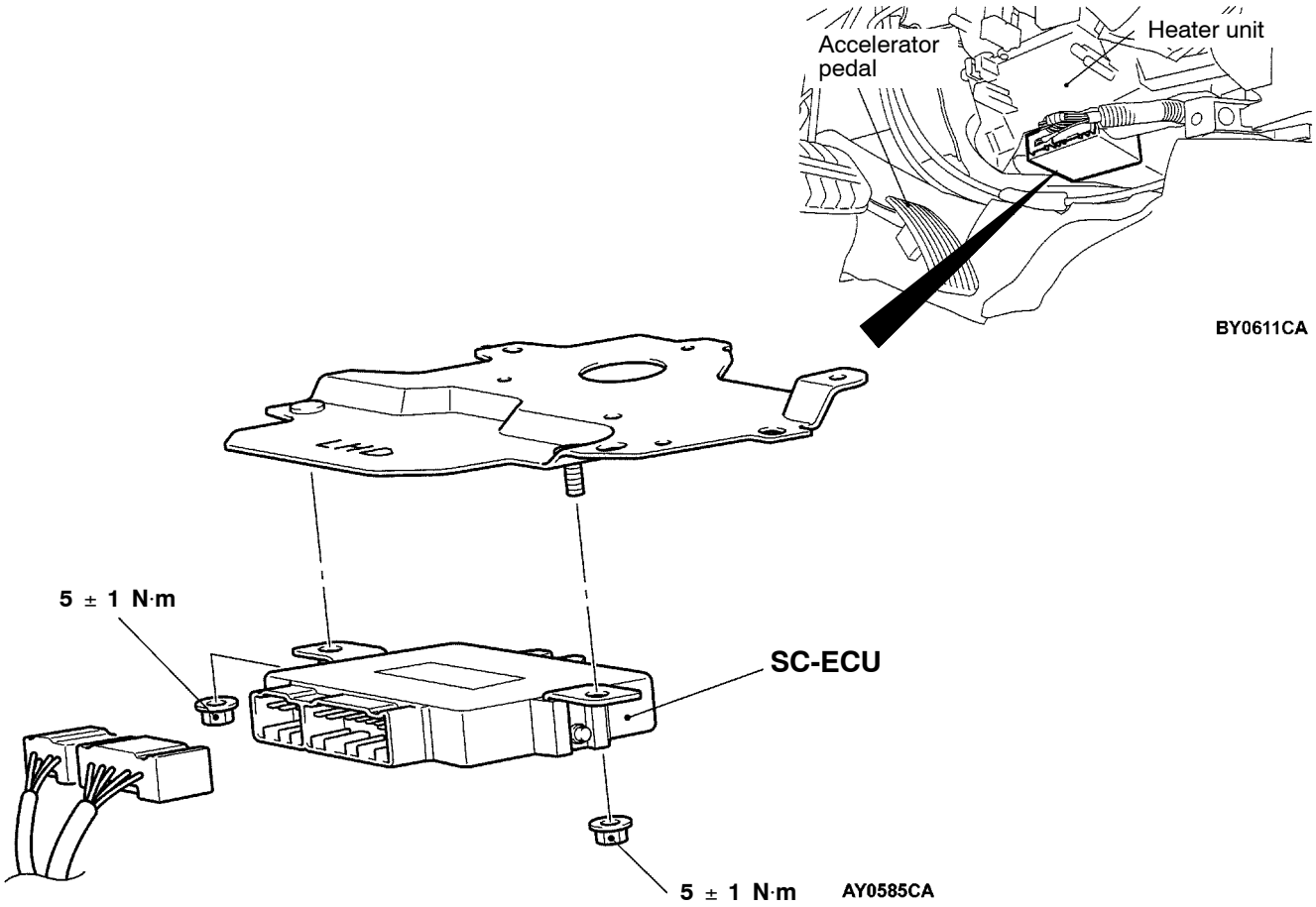


Purchased from www.WorkshopManuals.co.uk

www.WorkshopManuals.co.uk

# G SENSOR

## REMOVAL AND INSTALLATION

**Caution**
**Do not drop the G sensor or subject it to any shocks.**

**Pre-removal and Post-installation Operations**
Rear floor console removal and installation
(Refer to Basic Manual GROUP 52A.)

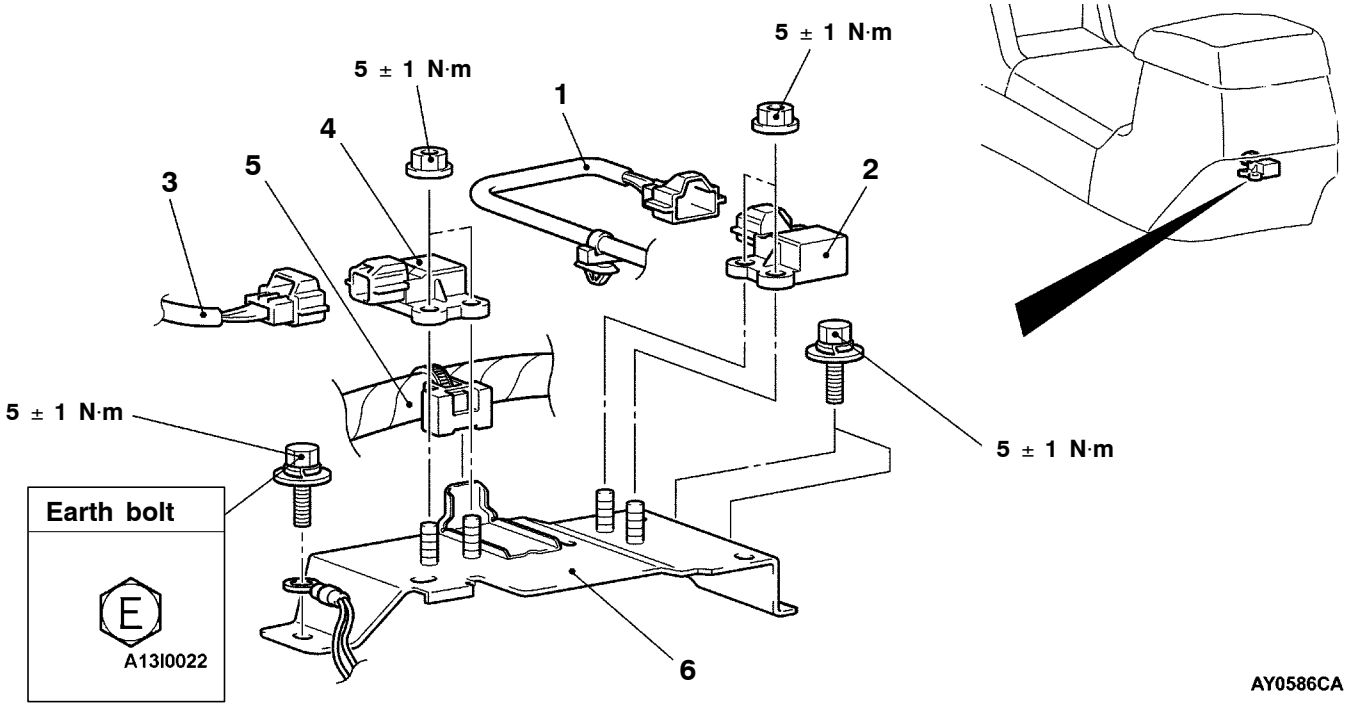


**Removal steps**

1. G sensor (for SC) connector and harness clamp
2. G sensor (for SC)
3. G sensor (for ABS) connector
4. G sensor (for ABS)
5. Harness clamp <L.H.D>
6. G sensor bracket

# WHEEL SPEED SENSOR (FR)

Refer to Basic Manual GROUP 35B - Wheel Speed Sensor.

# VEHICLE SPEED SENSOR

Refer to Basic Manual GROUP 54A - Combination Meter.

Purchased from www.WorkshopManuals.co.uk

www.WorkshopManuals.co.uk

# ENGINE COOLING

**Click on the applicable bookmark to selected the required model year.**

Purchased from www.WorkshopManuals.co.uk

www.WorkshopManuals.co.uk


# ENGINE COOLING

## CONTENTS

**GENERAL INFORMATION** . . . . . 2

**SERVICE SPECIFICATIONS** . . . . . 2

**LUBRICANT** . . . . . 2

**SEALANT** . . . . . 2

**ON-VEHICLE SERVICE** . . . . . 3

Engine Coolant Leak Checking . . . . . 3

Radiator Cap Valve Opening Pressure Check . . . . . 3

Engine Coolant Replacement . . . . . 3

Concentration Measurement . . . . . 5

**COOLING FAN** . . . . . 6

**THERMOSTAT** . . . . . 8

**WATER PUMP** . . . . . 11

**WATER HOSE AND WATER PIPE** . . . . . 15

**RADIATOR** . . . . . 20

Purchased from www.WorkshopManuals.co.uk

www.WorkshopManuals.co.uk

# GENERAL INFORMATION

The cooling system is designed to keep every part of the engine at appropriate temperature in whatever condition the engine may be operated. The cooling method is of the water-cooled, pressure forced circulation type in which the water pump pressurizes coolant and circulates it throughout the engine. If the coolant temperature exceeds the prescribed temperature, the thermostat opens to circulate the coolant through the radiator as well so that the heat absorbed by the coolant may be radiated into the air.

The water pump is of the centrifugal type and is driven by the drive belt from the crankshaft.
The radiator is the corrugated fin, down flow type.

| Items | | | Specifications |
|---|---|---|---|
| Radiator | Performance kJ/h | 6G7 | 203,023 |
| | | 4D5, 4M4 | 232,326 |

# SERVICE SPECIFICATIONS

| Items | | | Standard value | Limit |
|---|---|---|---|---|
| High pressure valve opening pressure of radiator cap kPa | | | 74 - 103 | 64 |
| Range of coolant antifreeze concentration of radiator % | | | 30 - 60 | - |
| Thermostat | Valve opening temperature of thermostat °C | 6G7 | 88 ± 2.0 | - |
| | | 4D5 | 82 ± 1.5 | - |
| | | 4M4 | 76.5 ± 2.0 | - |
| | Full-opening temperature of thermostat °C | 6G7 | 100 | - |
| | | 4D5 | 95 | - |
| | | 4M4 | 90 | - |
| | Valve lift mm | 6G7 | 10 or more | - |
| | | 4D5, 4M4 | 8.5 or more | - |

# LUBRICANT

| Item | Applicable model | Amount (including condense tank) L |
|---|---|---|
| MITSUBISHI GENUINE COOLANT or equivalent | Vehicles without rear heater | 9.0 |
| | Vehicles with rear heater | 10.5 |

# SEALANT

| Items | Specified sealant | Remarks |
|---|---|---|
| Cylinder block drain plug | 3M Nut Locking Part No. 4171 or equivalent | Drying sealant |

Purchased from www.WorkshopManuals.co.uk

www.WorkshopManuals.co.uk

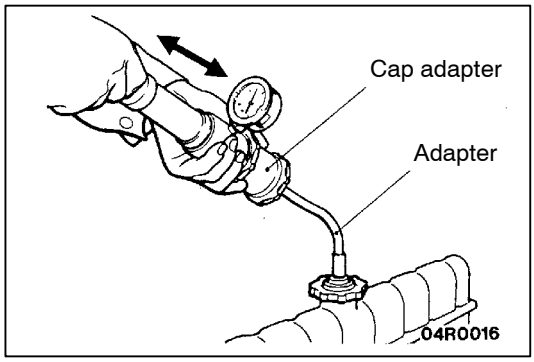


# ON-VEHICLE SERVICE

## ENGINE COOLANT LEAK CHECKING

1. Confirm that the coolant level is up to the filler neck. Install a radiator cap tester and apply 160 kPa pressure, and then check for leakage from the radiator hose or connections.

   **Caution**
   **(1) Be sure to completely clean away any moisture from the places checked.**
   **(2) When the tester is taken out, be careful not to spill any coolant from it.**
   **(3) Be careful, when installing and removing the tester and when testing, not to deform the filler neck of the radiator.**

2. If there is leakage, repair or replace the appropriate part.

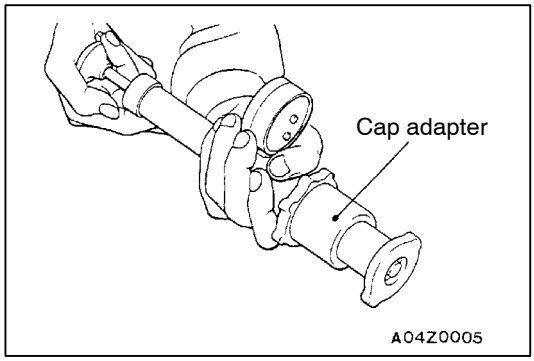


## RADIATOR CAP VALVE OPENING PRESSURE CHECK

1. Use a cap adapter to attach the cap to the tester.
2. Increase the pressure until the indicator of the gauge stops moving.

   **Limit: 64 kPa**

   **Standard value: 74 - 103 kPa**

3. Replace the radiator cap if the reading does not remain at or above the limit.

   NOTE
   Be sure that the cap is clean before testing, since rust or other foreign material on the cap seal will cause an improper indication.

## ENGINE COOLANT REPLACEMENT

1. Drain the engine coolant by removing the drain plug and then the radiator cap.

Purchased from www.WorkshopManuals.co.uk

www.WorkshopManuals.co.uk

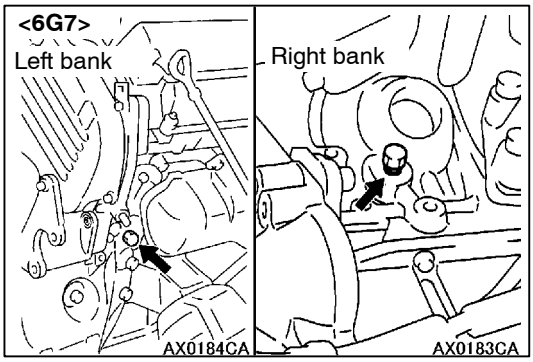


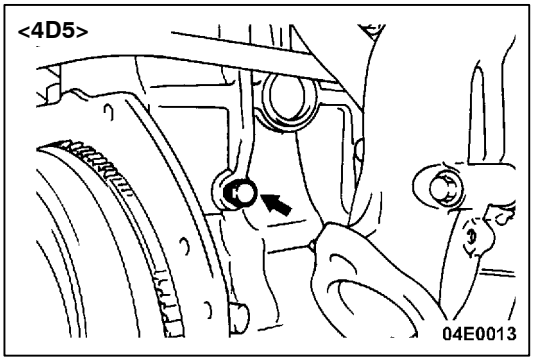


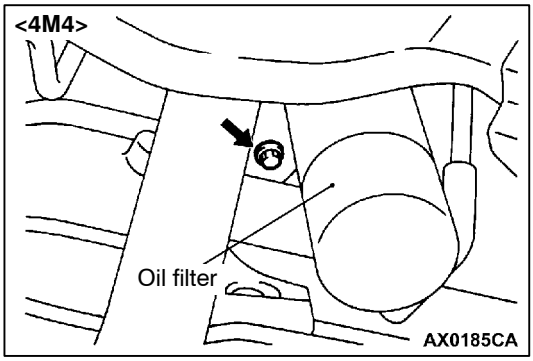


2. Remove the cylinder block drain plug from the cylinder block to drain the engine coolant.
3. Remove the reserve tank to drain the engine coolant.
4. When the engine coolant has drained, pour in water from the radiator cap to clean the engine coolant line.

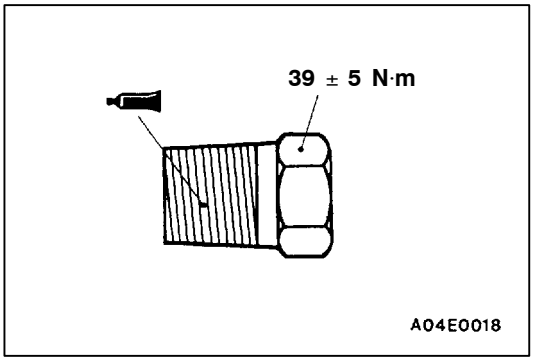


5. Coat the thread of the cylinder block drain plug with the specified sealant and tighten to the specified torque.

   **Specified sealant:**
   **3M Nut Locking Part No. 4171 or equivalent**
6. Securely tighten the radiator drain plug.
7. Install the reserve tank.
8. Remove the air bleed bolt and replace the seal washer.
9. Fill the radiator until the engine coolant flows from the air bleed bolt section, and then close the air bleed bolt.
10. Slowly pour the engine coolant into the mouth of the radiator until the radiator is full, and pour also into the reserve tank up to the FULL line.

    **Recommended anti-freeze:**
    **MITSUBISHI GENUINE COOLANT or equivalent**

    **Quantity:**
    **<Vehicles without rear heater> 9.0** L
    **<Vehicles with rear heater> 10.5** L

Purchased from www.WorkshopManuals.co.uk

www.WorkshopManuals.co.uk

**Caution**
**Do not use alcohol or methanol anti-freeze or any engine coolants mixed with alcohol or methanol anti-freeze. The use of an improper anti-freeze can cause the corrosion of the aluminium components.**

NOTE
For Norway, the non-amine type of anti-freeze should be used.

11. Install the radiator cap securely.
12. Start the engine and warm the engine until the thermostat opens. (Touch the radiator hose with your hand to check that warm water is flowing.)
13. After the thermostat opens, race the engine several times, and then stop the engine.
14. Cool down the engine, and then pour engine coolant into the reserve tank until the level reaches the FULL line. If the level is low, repeat the operation from step 11.

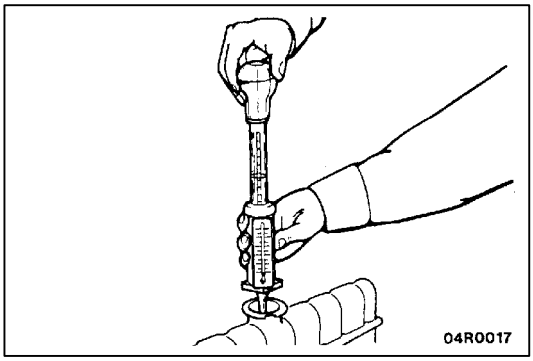


## CONCENTRATION MEASUREMENT

Measure the temperature and specific gravity of the engine coolant to check the antifreeze concentration.

**Standard value: 30 - 60 % (allowable concentration range)**

**RECOMMENDED ANTI-FREEZE**

| Antifreeze | Allowable concentration |
|---|---|
| MITSUBISHI GENUINE COOLANT or equivalent | 30 - 60 % |

**Caution**
**If the concentration of the anti-freeze is below 30 %, the anti-corrosion property will be adversely affected. In addition, if the concentration is above 60 %, both the anti-freezing and engine cooling properties will decrease, affecting the engine adversely. For these reasons, be sure to maintain the concentration level within the specified range.**

Purchased from www.WorkshopManuals.co.uk

www.WorkshopManuals.co.uk

# COOLING FAN

## REMOVAL AND INSTALLATION

<6G7>

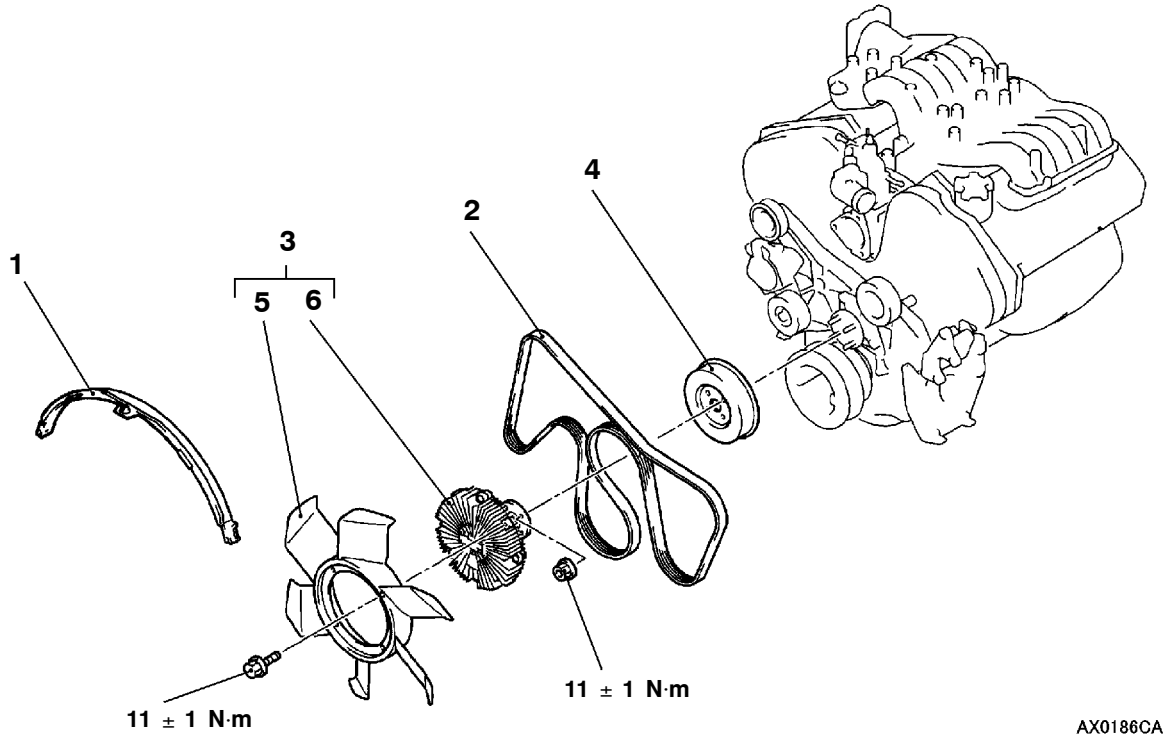


<4D5>

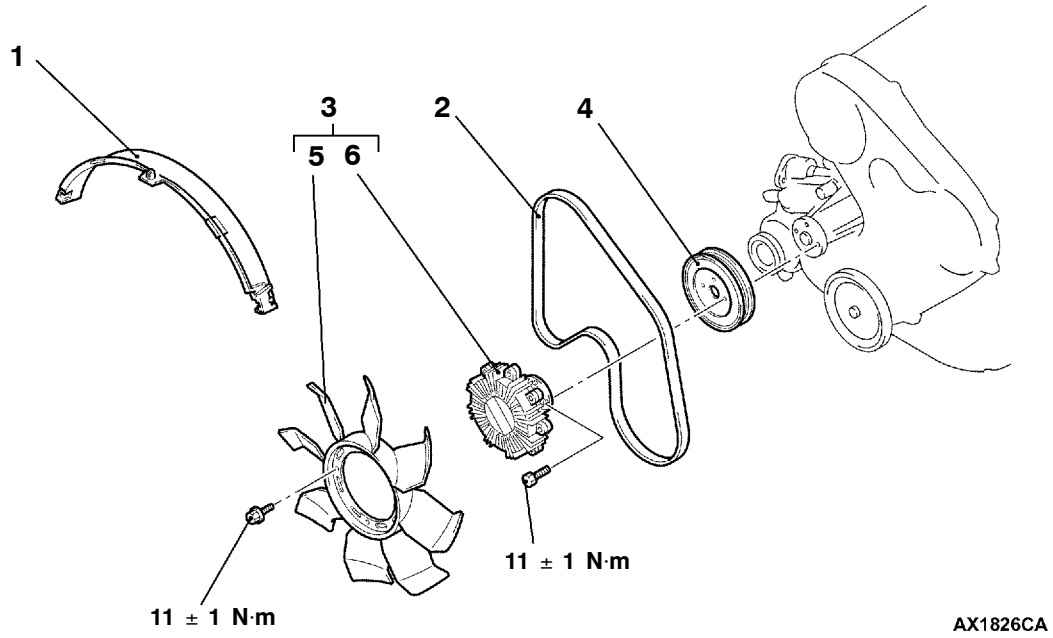


Purchased from www.WorkshopManuals.co.uk

www.WorkshopManuals.co.uk

<4M4>

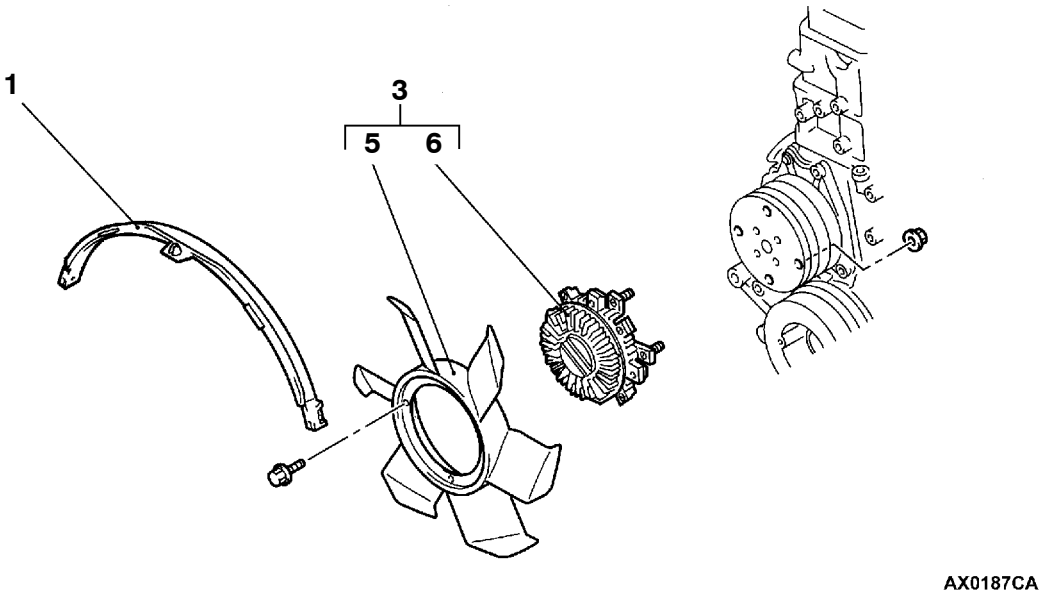


**Removal steps**

1. Radiator upper shroud
2. Drive belts
3. Cooling fan and fan clutch
4. Pulley
5. Cooling fan
6. Fan clutch

## INSPECTION

### COOLING FAN CHECK

- Check blades for damage and cracks.
- Check for cracks and damage around bolt holes in fan hub.
- If any portion of fan is damaged or cracked, replace cooling fan.

### FAN CLUTCH CHECK

- Check to ensure that fluid in fan clutch is not leaking at case joint and seals. If fluid quantity decreases due to leakage, fan speed will decrease and engine overheating might result.
- When a fan attached to an engine is turned by hand, it should give a sense of some resistance. If fan turns lightly, it is faulty.
- Check bimetal strip for damage.

Purchased from www.WorkshopManuals.co.uk

www.WorkshopManuals.co.uk

# THERMOSTAT

## REMOVAL AND INSTALLATION

<6G7>

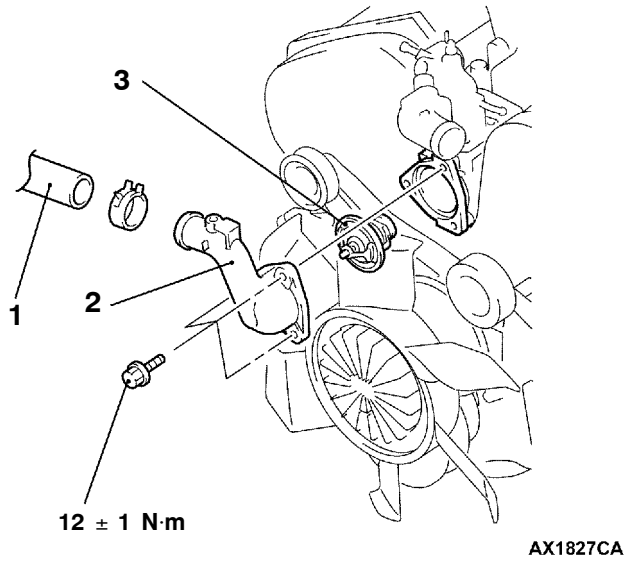


<4D5>

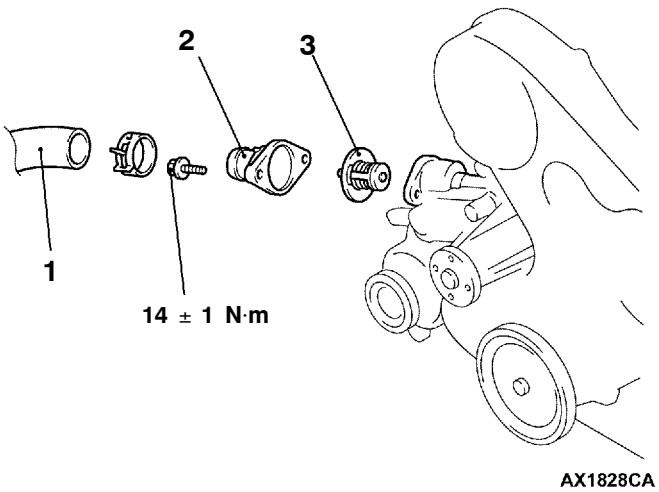


<4M4>

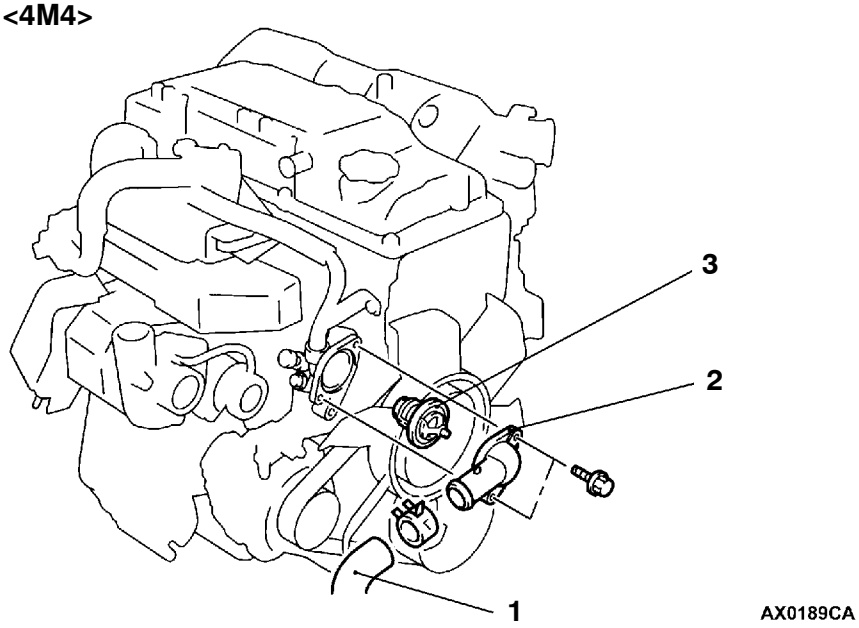


**Removal steps**

◀A▶ ▶B◀ 1. Radiator lower hose connection
2. Water inlet fitting
▶A◀ 3. Thermostat

Purchased from www.WorkshopManuals.co.uk

www.WorkshopManuals.co.uk

## REMOVAL SERVICE POINT

### ◀A▶ RADIATOR LOWER HOSE DISCONNECTION

After making mating marks on the radiator hose and the hose clamp,disconnect the radiator hose.

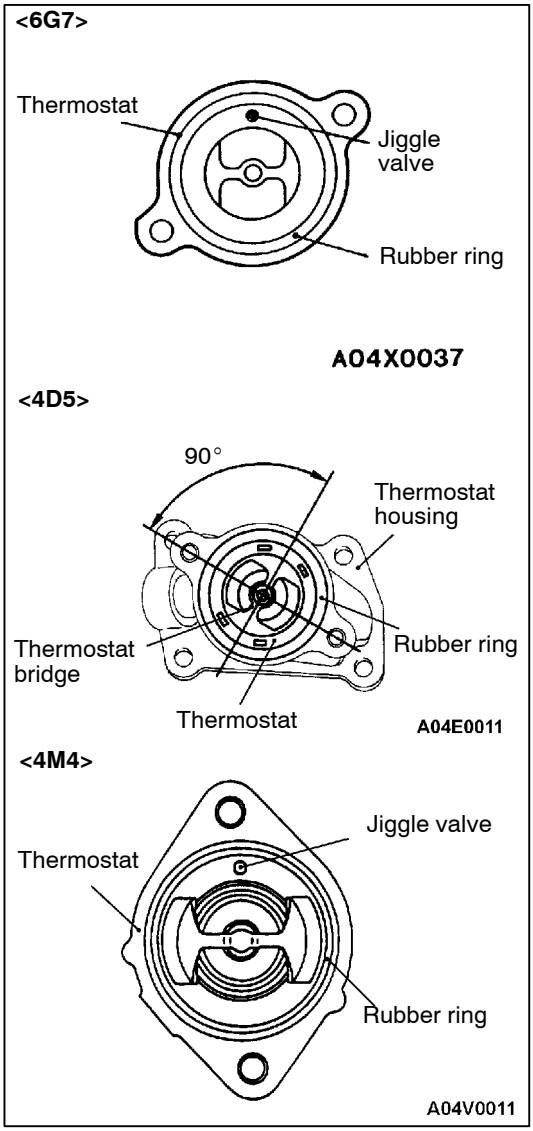


## INSTALLATION SERVICE POINTS

### ▶A◀ THERMOSTAT INSTALLATION

Install the thermostat so that the jiggle valve is facing straight up.

**Caution**

**Make absolutely sure that no oil is adhering to the rubber ring of the thermostat. In addition, be careful not to fold over or scratch the rubber ring when inserting. If the rubber ring is damage, replace the thermostat.**

### ▶B◀ RADIATOR LOWER HOSE CONNECTION

1. Insert each hose as far as the projection of the water inlet fitting.
2. Align the mating marks on the radiator hose and hose clamp, and then connect the radiator hose.

Purchased from www.WorkshopManuals.co.uk

www.WorkshopManuals.co.uk

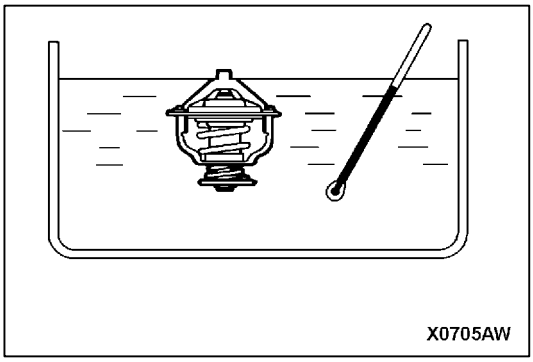


## INSPECTION

### THERMOSTAT CHECK

1. Immerse the thermostat in water, and heat the water while stirring. Check the thermostat valve opening temperature.

   **Standard value:**

   **Valve opening temperature:**
   **<6G7> 88 ± 2.0°C**
   **<4D5> 82 ± 1.5°C**
   **<4M4> 76.5 ± 2.0°C**

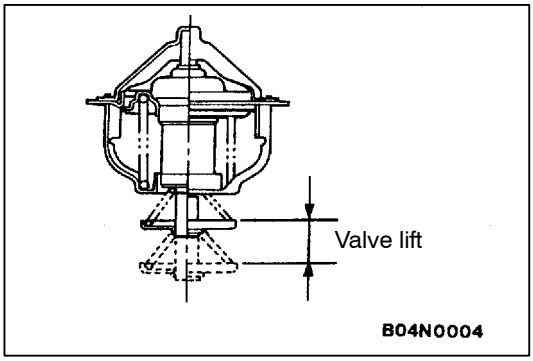


2. Check that the amount of valve lift is at the standard value when the water is at the full-opening temperature.

   **Standard value:**

| Items | 6G7 | 4D5 | 4M4 |
|---|---|---|---|
| Full-opening temperature °C | 100 | 95 | 90 |
| Amount of valve lift mm | 10 or more | 8.5 or more | 8.5 or more |

NOTE
Measure the valve height when the thermostat is fully closed, and use this measurement to calculate the valve height when the thermostat is fully open.

Purchased from www.WorkshopManuals.co.uk

www.WorkshopManuals.co.uk

# WATER PUMP

## REMOVAL AND INSTALLATION

**<6G7>**

**Pre-removal and Post-installation Operation**
- Engine Coolant Draining and Supplying (Refer to P. 14-3.)
- Timing Belt Removal and Installation (Refer to GROUP 11A.)
- Camshaft Sprocket Removal and Installation (Refer to GROUP 11A.)
- Thermostat Removal and Installation (Refer to P.14-7.)

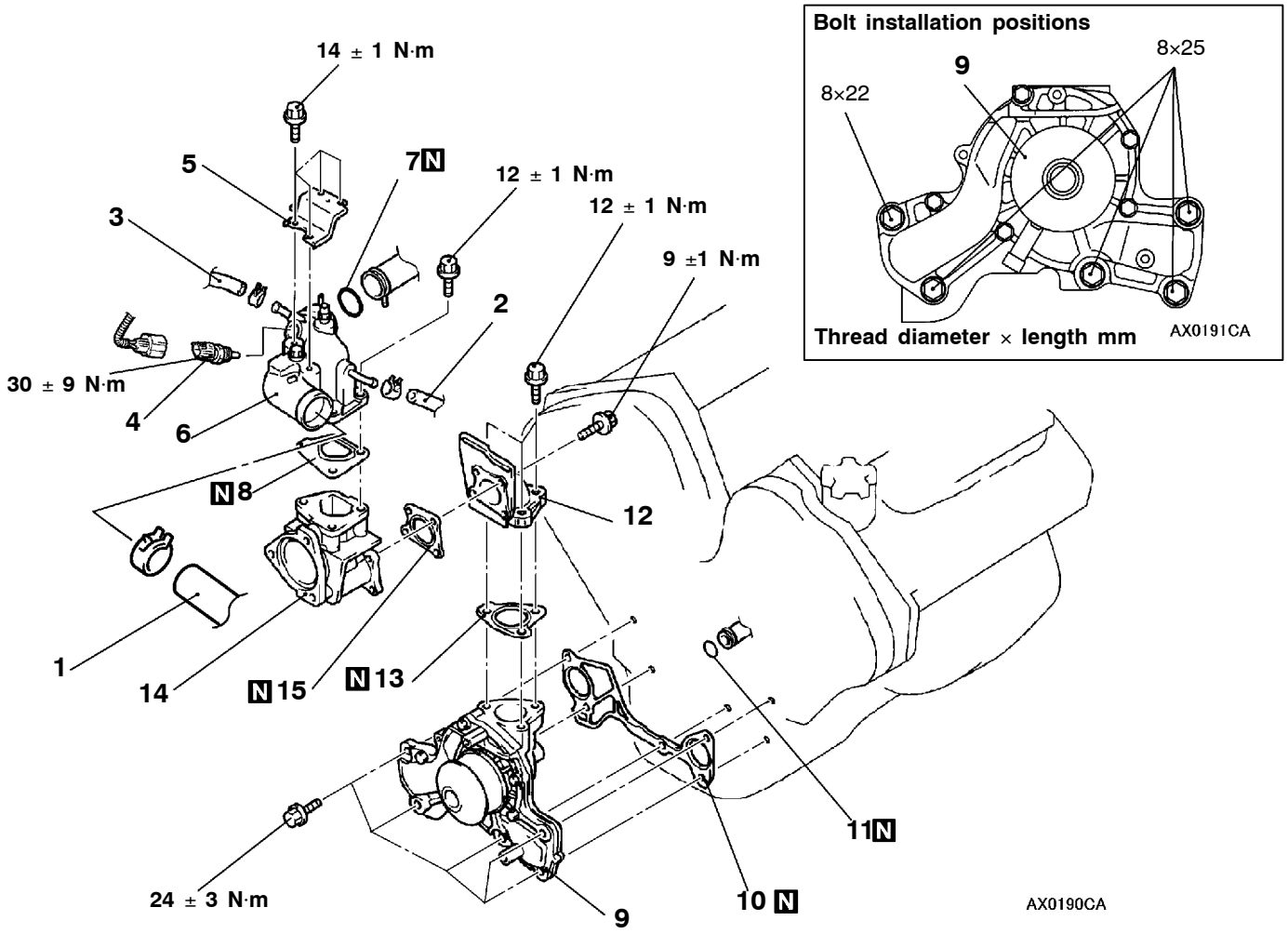


**Removal steps**

◀A▶ ▶C◀ 1. Radiator upper hose connection
2. Water hose
3. Water hose
4. Water temperature sensor
5. Water outlet fitting bracket
6. Water outlet fitting
▶A◀ 7. O-ring
8. Gasket
9. Water pump
10. Gasket
▶A◀ 11. O-ring
12. Fitting
13. Gasket
14. Thermostat case
15. Gasket

Purchased from www.WorkshopManuals.co.uk

www.WorkshopManuals.co.uk

<4D5>

**Pre-removal and Post-installation Operation**
- Engine Coolant Draining and Supplying (Refer to P. 14-3.)
- Timing Belt Removal and Installation (Refer to GROUP 11B.)
- Thermostat Removal and Installation (Refer to P.14-7.)

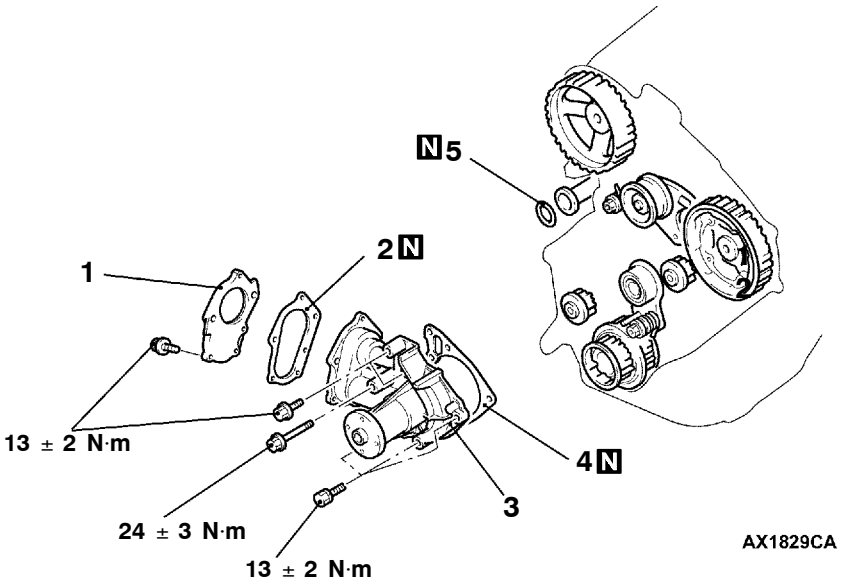


**Bolt installation positions**

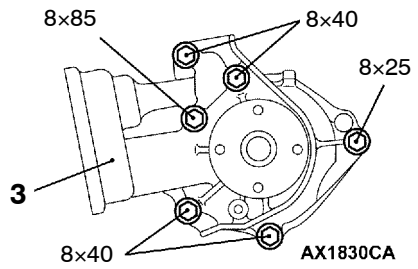


**Thread diameter × length mm**

**Removal steps**
- Air intake hose (Refer to GROUP 15 - Air Cleaner.)
- Power steering oil pump (Refer to GROUP 37A.)

1. Plate
2. Gasket
3. Water pump assembly
4. Gasket

▶A◀ 5. O-ring

Purchased from www.WorkshopManuals.co.uk

www.WorkshopManuals.co.uk

<4M4>

**Pre-removal and Post-installation Operation**
- Engine Coolant Draining and Supplying (Refer to P. 14-3.)
- Cooling Fan Removal and Installation (Refer to P.14-7.)

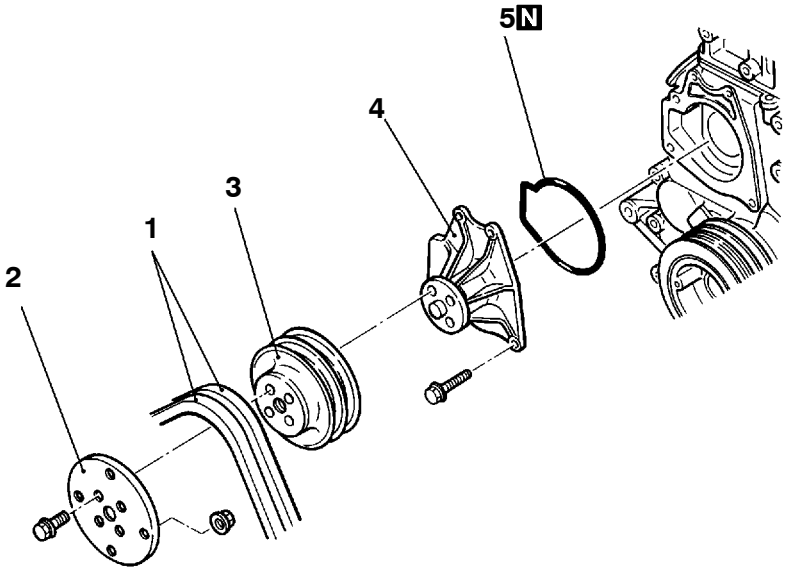


A04E0055

**Removal steps**

1. Drive belt
2. Coupling plate
3. Fan pulley
4. Water pump
▶B◀ 5. O-ring

Purchased from www.WorkshopManuals.co.uk

www.WorkshopManuals.co.uk

## REMOVAL SERVICE POINT

### ◀A▶ RADIATOR UPPER HOSE DISCONNECTION

After making mating marks on the radiator hose and the hose clamp,disconnect the radiator hose.

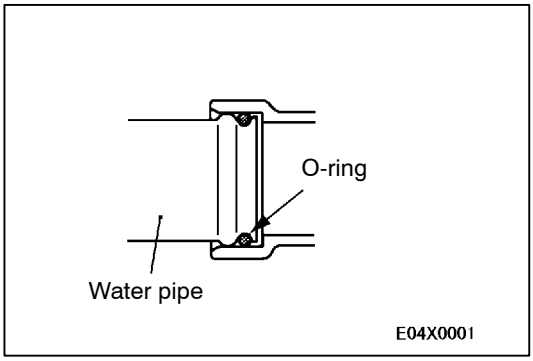


## INSTALLATION SERVICE POINTS

### ▶A◀ O-RING INSTALLATION<6G7, 4D5>

Rinse the mounting location of the O-ring and water pipe with water, and install the O-ring and water pipe.

**Caution**

1. **Care must be taken not to permit engine oil or other greases to adhere to the O-ring.**
2. **When inserting the pipe, check to be sure that there is no sand, dirt, etc. on its inner surface.**

### ▶B◀ O-RING INSTALLATION <4M4>

Apply water around the O-ring before installing it.

**Caution**

**Be careful not to contaminate the O-ring with engine oil or grease.**

### ▶C◀ RADIATOR UPPER HOSE CONNECTION

1. Insert each hose as far as the projection of the water inlet fitting.
2. Align the mating marks on the radiator hose and hose clamp, and then connect the radiator hose.

Purchased from www.WorkshopManuals.co.uk

www.WorkshopManuals.co.uk

# WATER HOSE AND WATER PIPE

## REMOVAL AND INSTALLATION

**<6G7>**

**Pre-removal and Post-installation Operation**
- Engine Coolant Draining and Supplying (Refer to P. 14-3.)
- Thermostat Removal and Installation (Refer to P. 14-8.)
- Intake Manifold Removal and Installation (Refer to GROUP 15.)
- Injector Removal and Installation (Refer to GROUP 13A.)
- Fuel Pump (high-pressure) Removal and Installation (Refer to GROUP 13A.)

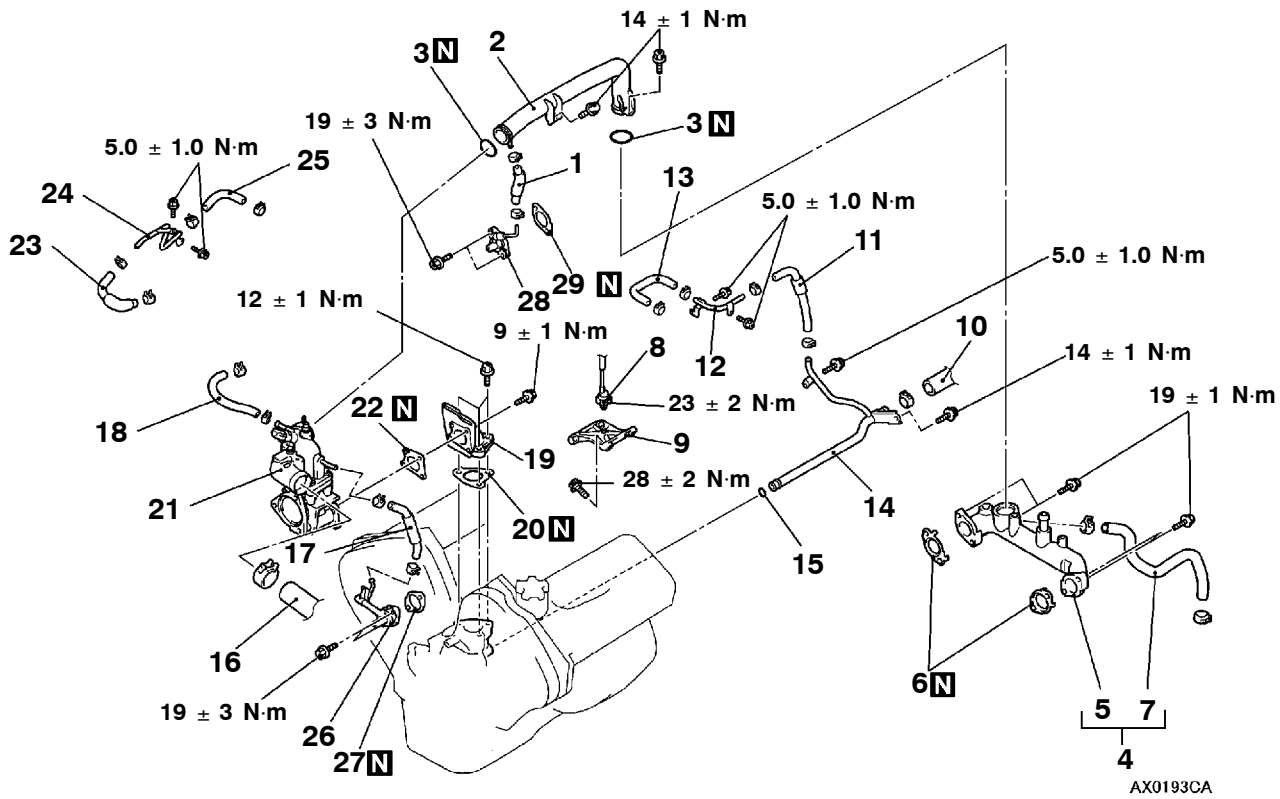


**Removal steps**

1. Water hose
2. Water outlet pipe
3. ▶B◀ O-ring
4. Heater hose and water passage assembly
5. Water passage assembly
6. ▶D◀ Gasket
7. Heater hose
8. ◀A▶ ▶C◀ Detonation sensor
9. Detonation sensor bracket
10. Heater hose connection
11. Water hose
12. Water pipe
13. Water hose
14. Water pipe assembly
15. ▶B◀ O-ring
16. ◀B▶ ▶A◀ Radiator upper hose connection
17. Water hose
18. Water hose
19. Fitting
20. Gasket
21. Water outlet fitting and thermostat case
22. Gasket
23. Water hose
24. Water pipe
25. Water hose
26. Left fitting
27. Gasket
28. Right fitting
29. Gasket

Purchased from www.WorkshopManuals.co.uk

www.WorkshopManuals.co.uk

<4D5>

**Pre-removal and Post-installation Operation**
- Engine Coolant Draining and Supplying (Refer to P.14-3.)
- Injection Pipe Removal and Installation (Refer to GROUP 13E - Injection Nozzle.)
- Intake, Exhaust Manifold Removal and Installation (Refer to GROUP 15.)

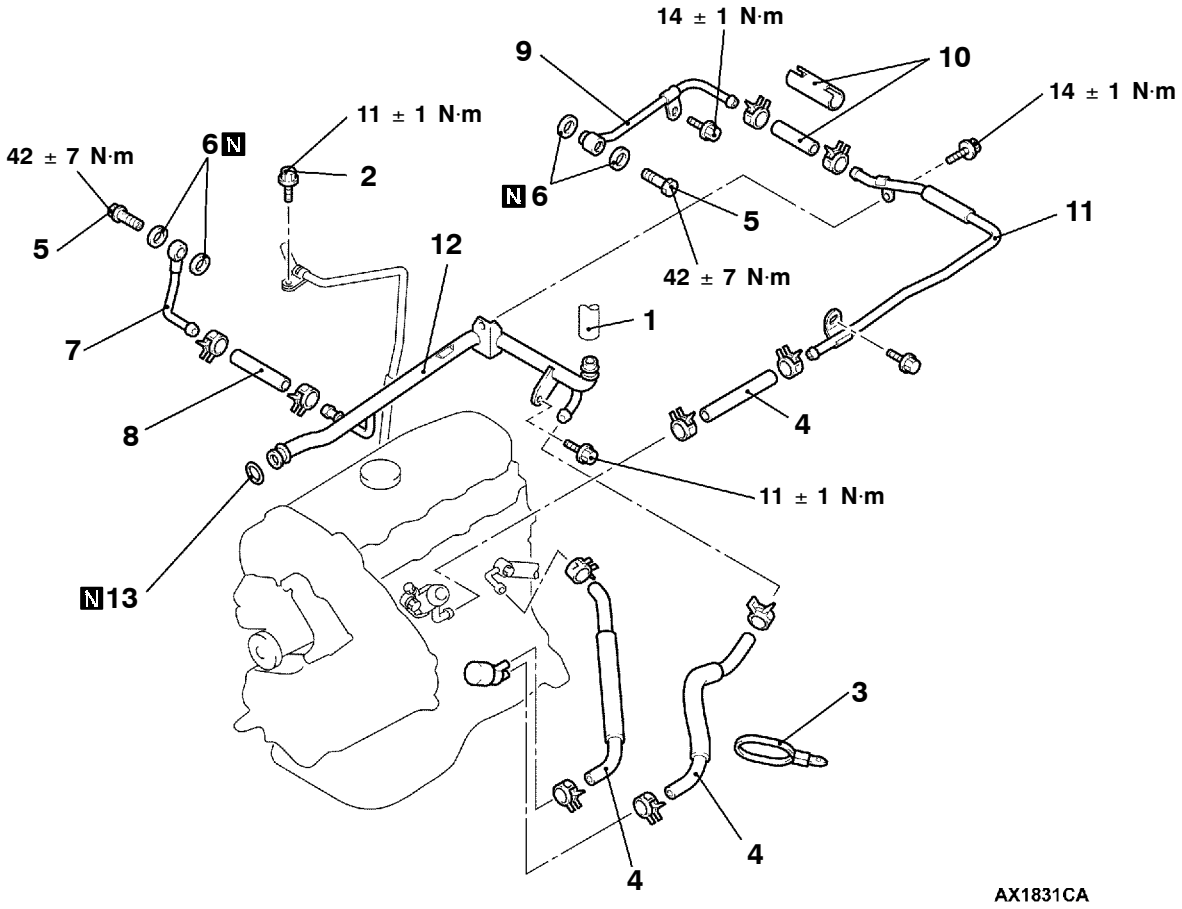


**Removal steps**

1. Heater hose connection
2. Vacuum pipe installation bolt
3. Cable ban
4. Water hose
5. Eye bolt
6. Gasket
7. Water pipe assembly A
8. Water hose
9. Water pipe assembly B
10. Water hose
11. Water pipe assembly C
12. Water pipe assembly
▶B◀ 13. O-ring

Purchased from www.WorkshopManuals.co.uk

www.WorkshopManuals.co.uk

<4M4>

**Pre-removal and Post-installation Operation**
- Engine Coolant Draining and Supplying (Refer to P. 14-3.)
- Air Cleaner Removal and Installation (Refer to GROUP 15.)

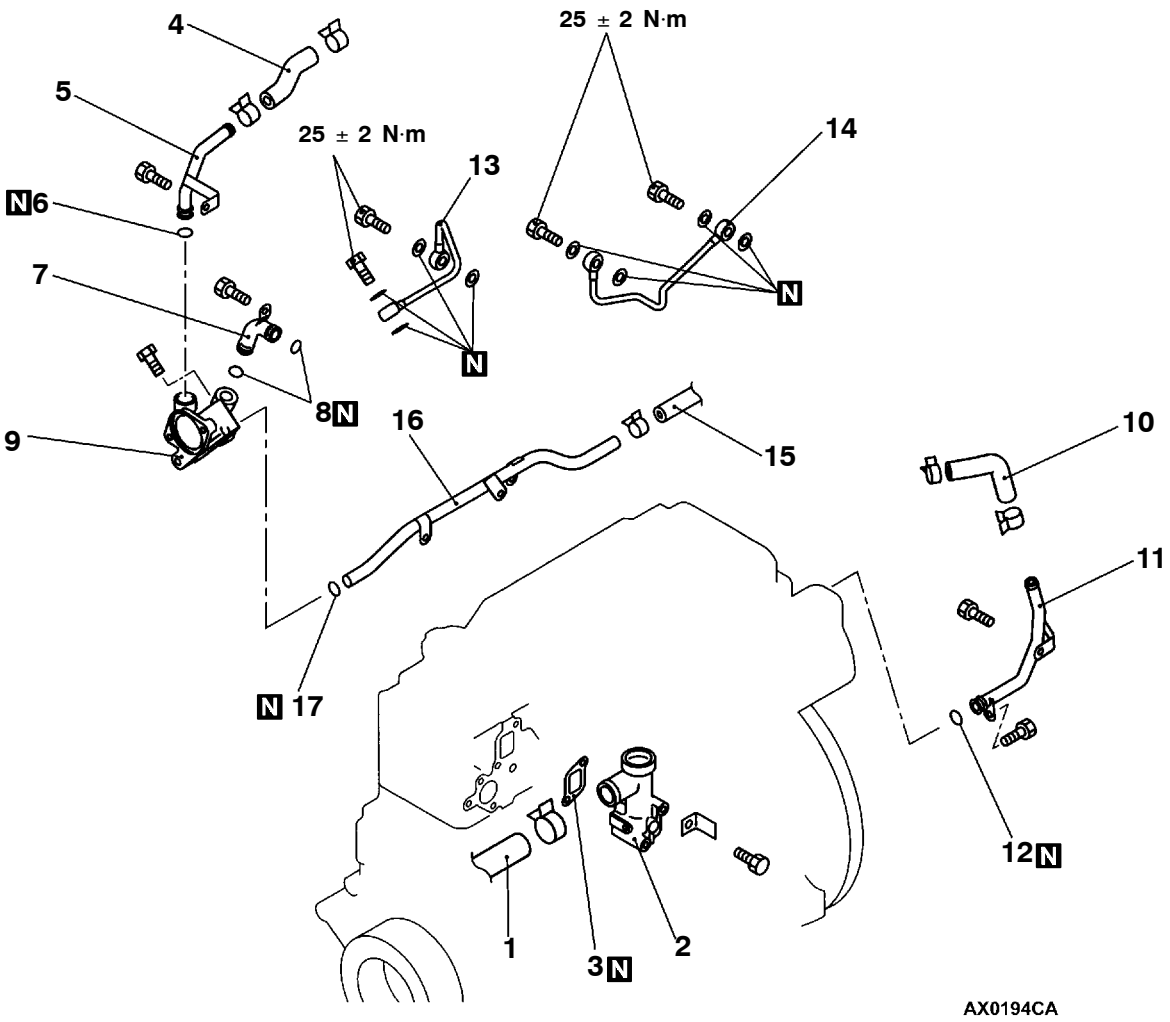


**Removal steps**

◀B▶ ▶A◀ 1. Radiator upper hose connection
2. Water outlet pipe
3. Gasket
4. Water hose
5. EGR water outlet pipe
▶B◀ 6. O-ring
7. Bypass pipe
▶B◀ 8. O-ring
9. Thermostat case
10. Water hose
11. EGR water inlet pipe
▶B◀ 12. O-ring
13. Tuebocharger water outlet pipe
14. Tuebocharger water inlet pipe
15. Heater hose connection
16. Heater return pipe
▶B◀ 17. O-ring

Purchased from www.WorkshopManuals.co.uk

www.WorkshopManuals.co.uk

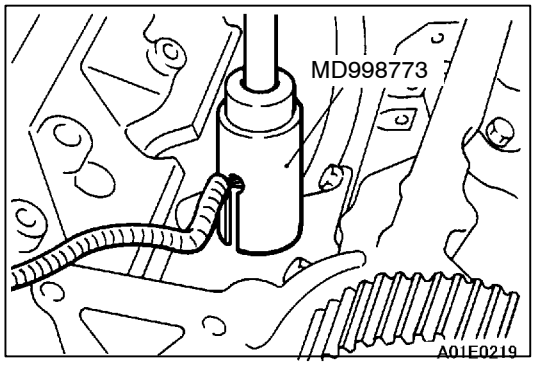


## REMOVAL SERVICE POINTS

### ◀A▶DETONATION SENSOR REMOVAL

### ◀B▶ RADIATOR UPPER HOSE DISCONNECTION

After making mating marks on the radiator hose and the hose clamp,disconnect the radiator hose.

## INSTALLATION SERVICE POINTS

### ▶A◀ RADIATOR UPPER HOSE CONNECTION

1. Insert each hose as far as the projection of the water inlet fitting.
2. Align the mating marks on the radiator hose and hose clamp, and then connect the radiator hose.

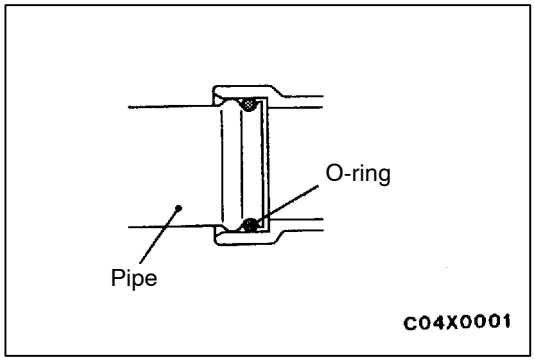


### ▶B◀ O-RING INSTALLATION

Insert the O-ring to pipe, and coat the outer circumference of the O-ring with water.

**Caution**
**Care must be taken not to permit engine oil or other greases to adhere to the o-ring.**

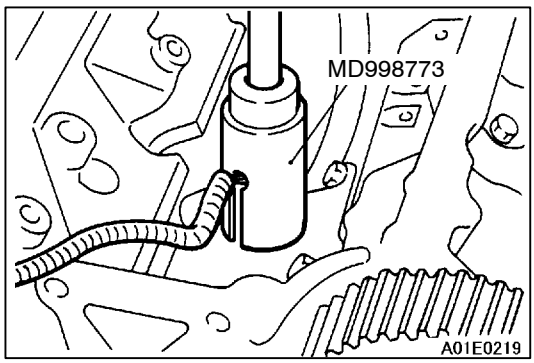


### ▶C◀DETONATION SENSOR INSTALLATION

Purchased from www.WorkshopManuals.co.uk

www.WorkshopManuals.co.uk

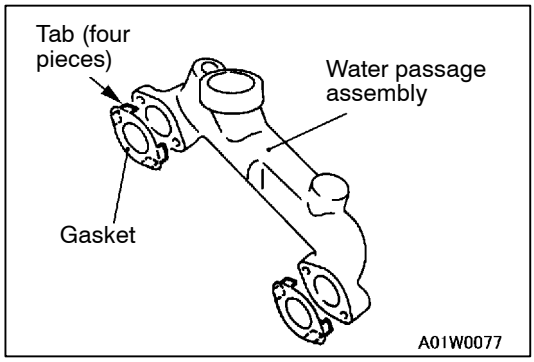


**▶D◀GASKET INSTALLATION <6G7>**

Engage the gasket tabs with recesses on the water passage.

## INSPECTION

### WATER PIPE AND HOSE CHECK

Check the water pipe and hose for cracks, damage, clog and replace them if necessary.

Purchased from www.WorkshopManuals.co.uk

www.WorkshopManuals.co.uk

# RADIATOR

## REMOVAL AND INSTALLATION

**Pre-removal Operation**
Engine Coolant Draining (Refer to P. 14-3.)

**Post-installation Operation**
- Engine Coolant Supplying (Refer to P. 14-3.)
- A/T Fluid Supplying and Checking (Refer to GROUP 23 - On-vehicle Service.)

<6G7>

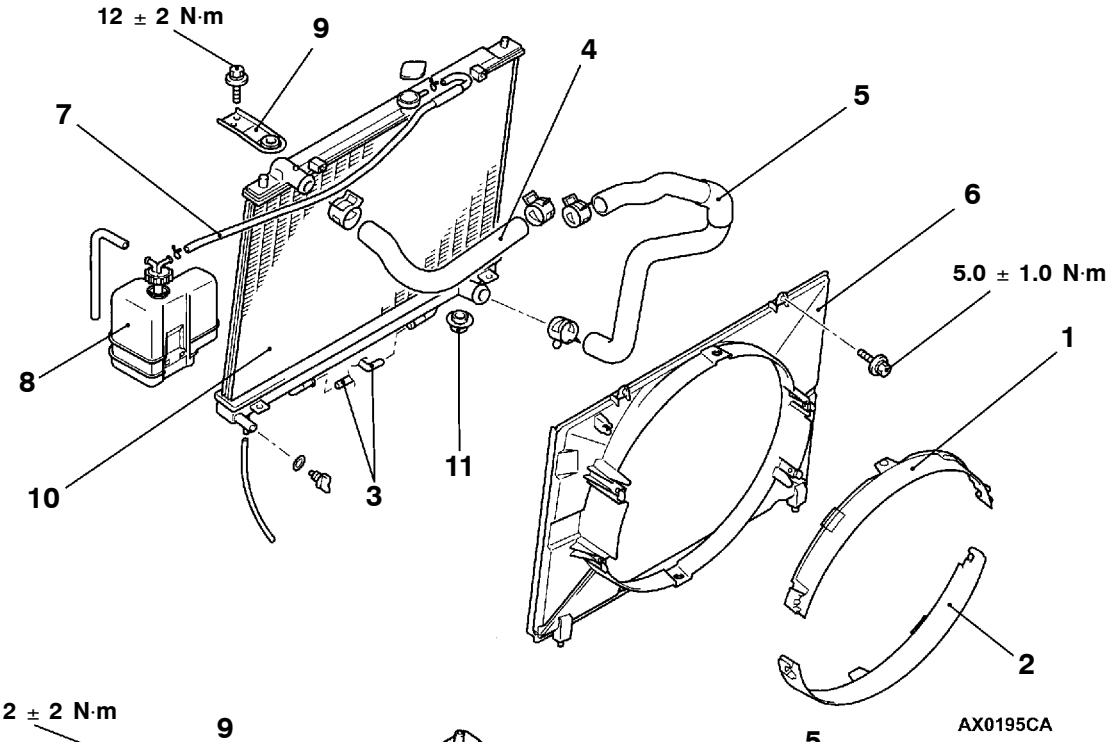


<4D5>

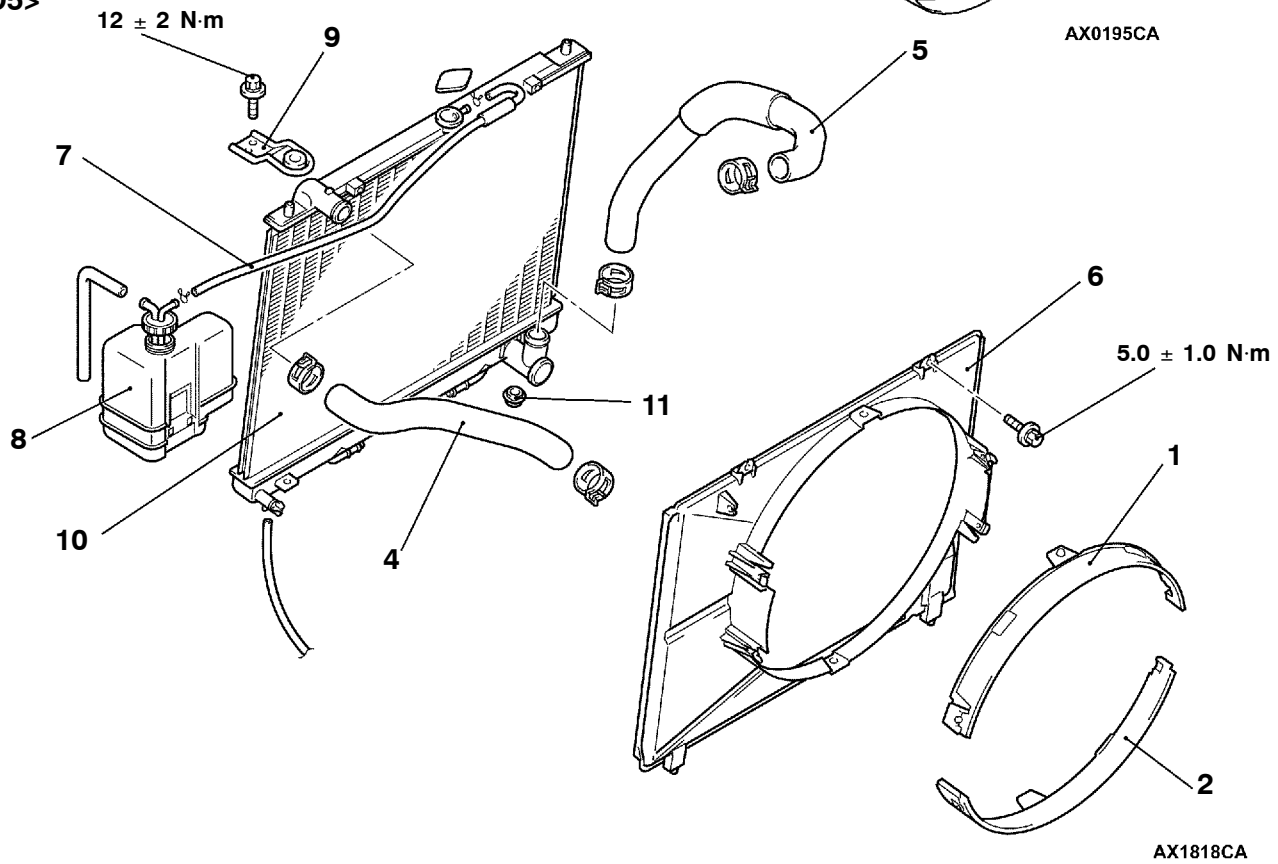


Purchased from www.WorkshopManuals.co.uk

www.WorkshopManuals.co.uk

<4M4>

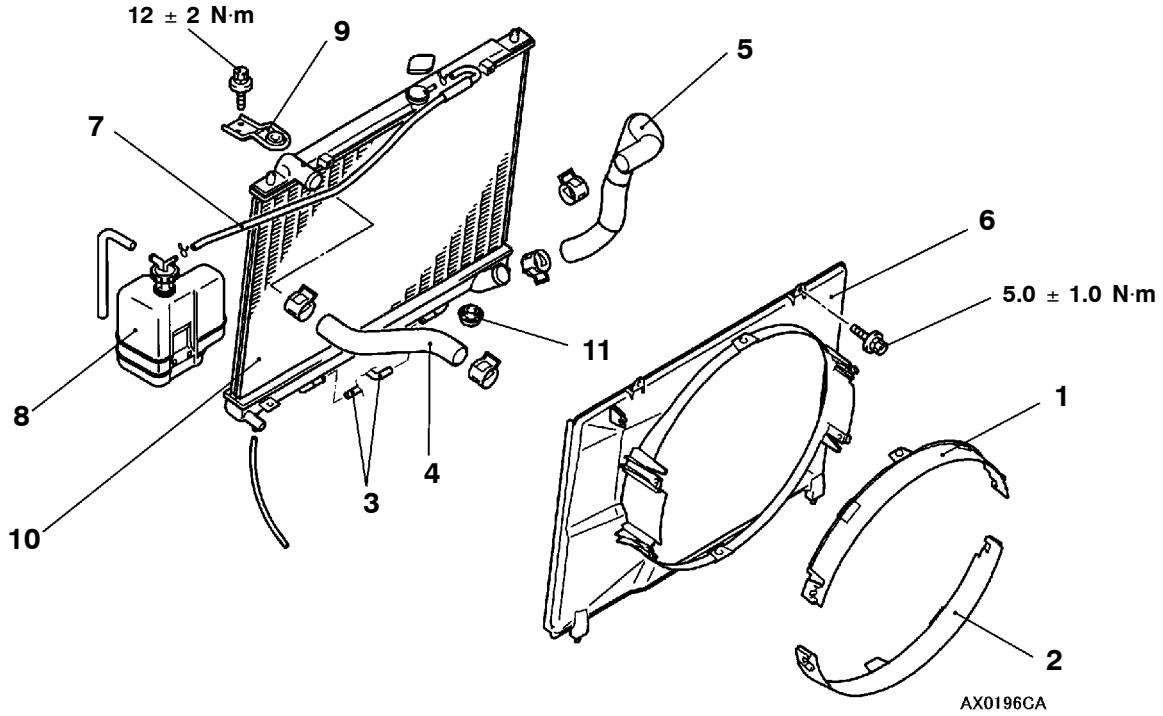


**Removal steps**

◀A▶ ▶B◀ 1. Radiator shroud upper cover
◀A▶ ▶B◀ 2. Radiator shroud lower cover
◀B▶ 3. Transmission fluid cooler hose connection <A/T>
◀C▶ ▶A◀ 4. Radiator upper hose
◀C▶ ▶A◀ 5. Radiator lower hose
6. Shroud
7. Rubber hose
8. Reserve tank assembly
9. Upper insulator
10. Radiator
11. Lower insulator

## REMOVAL SERVICE POINTS

### ◀A▶ RADIATOR SHROUD UPPER COVER/RADIATOR SHROUD LOWER COVER REMOVAL

Tilt the lock lever at the shroud housing cover outward slightly, and remove the cover to the fan axial direction (The cover is secured at four positions).

**Caution**
**If the lock lever is tilted too much, the lever may be damaged or deformed.**

### ◀B▶ TRANSMISSION FLUID COOLER HOSE CONNECTION

After disconnecting the hose, plug it to avoid dust or foreign material.

Purchased from www.WorkshopManuals.co.uk

www.WorkshopManuals.co.uk

### ◀C▶ RADIATOR UPPER HOSE/RADIATOR LOWER HOSE DISCONNECTION

After making mating marks on the radiator hose and the hose clamp,disconnect the radiator hose.

## INSTALLATION SERVICE POINTS

### ▶A◀ RADIATOR UPPER HOSE/RADIATOR LOWER HOSE CONNECTION

1. Insert each hose as far as the projection of each fitting.
2. Align the mating marks on the radiator upper hose and hose clamp, and then connect the radiator hose.

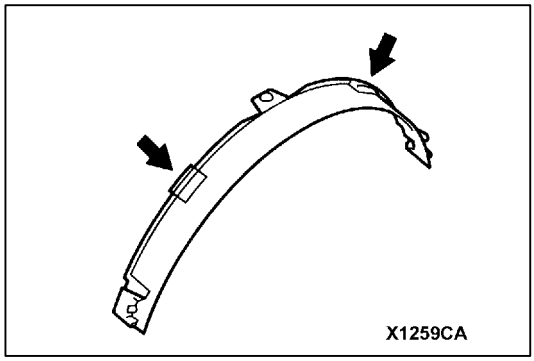


### ▶B◀ RADIATOR SHROUD UPPER COVER/RADIATOR SHROUD LOWER COVER INSTALLATION

1. Install the shrouds securely until a click can be heard at all four positions.
2. Two tabs on each cover should protrude outside the shroud.
3. On completion, confirm that the covers are not loose.

Purchased from www.WorkshopManuals.co.uk

www.WorkshopManuals.co.uk


# ENGINE COOLING

## CONTENTS

**GENERAL** . . . . . 2
Outline of Changes . . . . . 2
**WATER HOSE AND WATER PIPE <4D5>** . . . . 3
**WATER HOSE AND WATER PIPE <4M4>** . . . 5

Purchased from www.WorkshopManuals.co.uk

www.WorkshopManuals.co.uk

# GENERAL

## OUTLINE OF CHANGES

Some service procedures have been established as the following changes have been made due to the compliance with the Emission Regulation Step III.

- The turbocharger has been changed to a Variable Geometry (VG) type. Due to this change, an EGR cooler has been added and section ”Water hose and water pipe” has been changed. <4D5>
- The section ”Water hose and water pipe” has been changed due to the addition of the EGR cooler. <4M4>

Purchased from www.WorkshopManuals.co.uk

www.WorkshopManuals.co.uk

# WATER HOSE AND WATER PIPE <4D5>

## REMOVAL AND INSTALLATION

**Pre-removal and Post-installation Operation**
- Engine Coolant Draining and Supplying.
- Injection Pipe Removal and Installation.

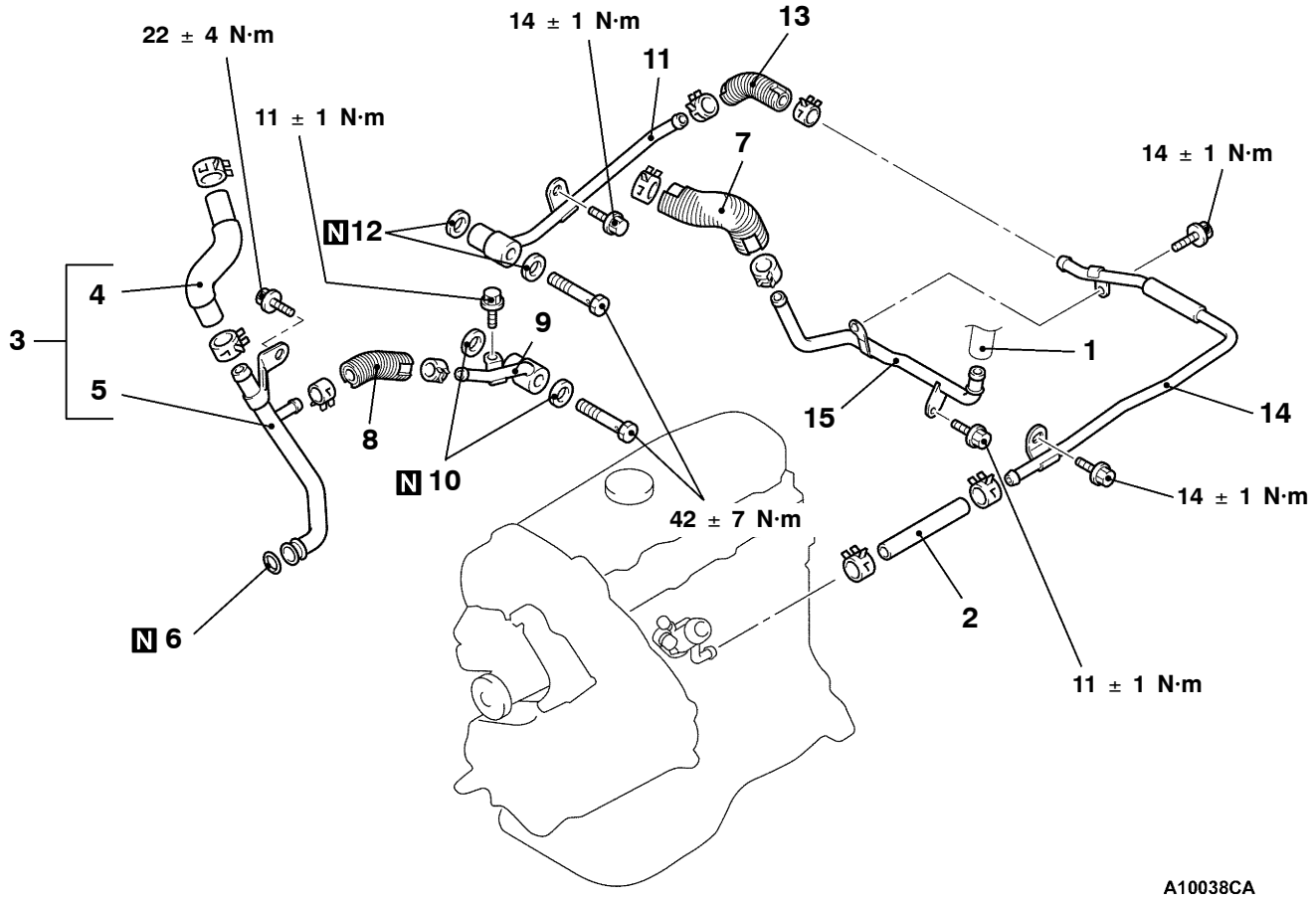


**Removal steps**

1. Heater hose connection
2. Water hose
   - Air cleaner assembly
3. Water pipe and hose assembly
4. ▶A◀ Water hose
5. Water pipe E
6. ▶B◀ O-ring
7. ▶A◀ Water hose
   - EGR valve, EGR cooler (Refer to GROUP 17.)
   - Turbocharger heat protector (Refer to GROUP 15 - Intake and exhaust manifold, turbocharger.)
8. Water hose
9. Water pipe A
10. Gasket
11. Water pipe B
12. Gasket
13. Water hose
14. Water pipe C
15. Water pipe D

Purchased from www.WorkshopManuals.co.uk

www.WorkshopManuals.co.uk

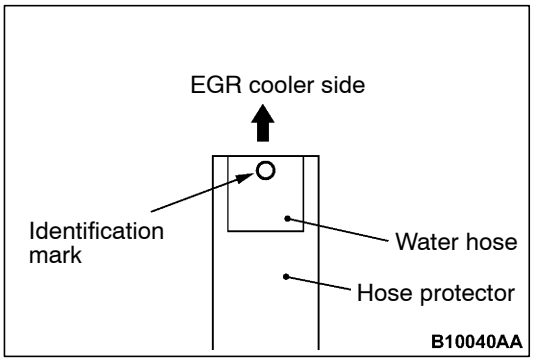


## INSTALLATION SERVICE POINTS

### ▶A◀ WATER HOSE INSTALLATION

The identification mark on the water hose end should face toward the EGR cooler.

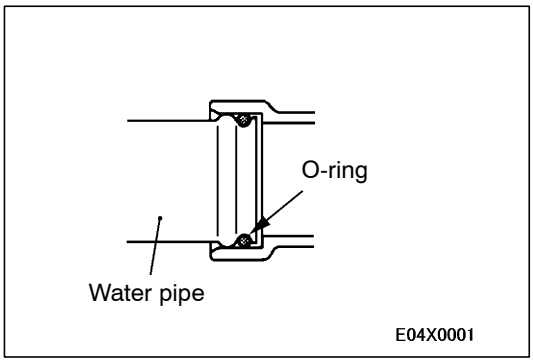


## INSTALLATION SERVICE POINTS

### ▶B◀ O-RING INSTALLATION

Rinse the mounting location of the O-ring and water pipe with water, and install the O-ring and water pipe.

**Caution**

1. **Care must be taken not to permit engine oil or other greases to adhere to the O-ring.**
2. **When inserting the pipe, check to be sure that there is no sand, dirt, etc. on its inner surface.**

Purchased from www.WorkshopManuals.co.uk

www.WorkshopManuals.co.uk

# WATER HOSE AND WATER PIPE <4M4>

## REMOVAL AND INSTALLATION

**Pre-removal and Post-installation Operation**
- Engine Coolant Draining and Supplying
- Engine Cover Removal and Installation

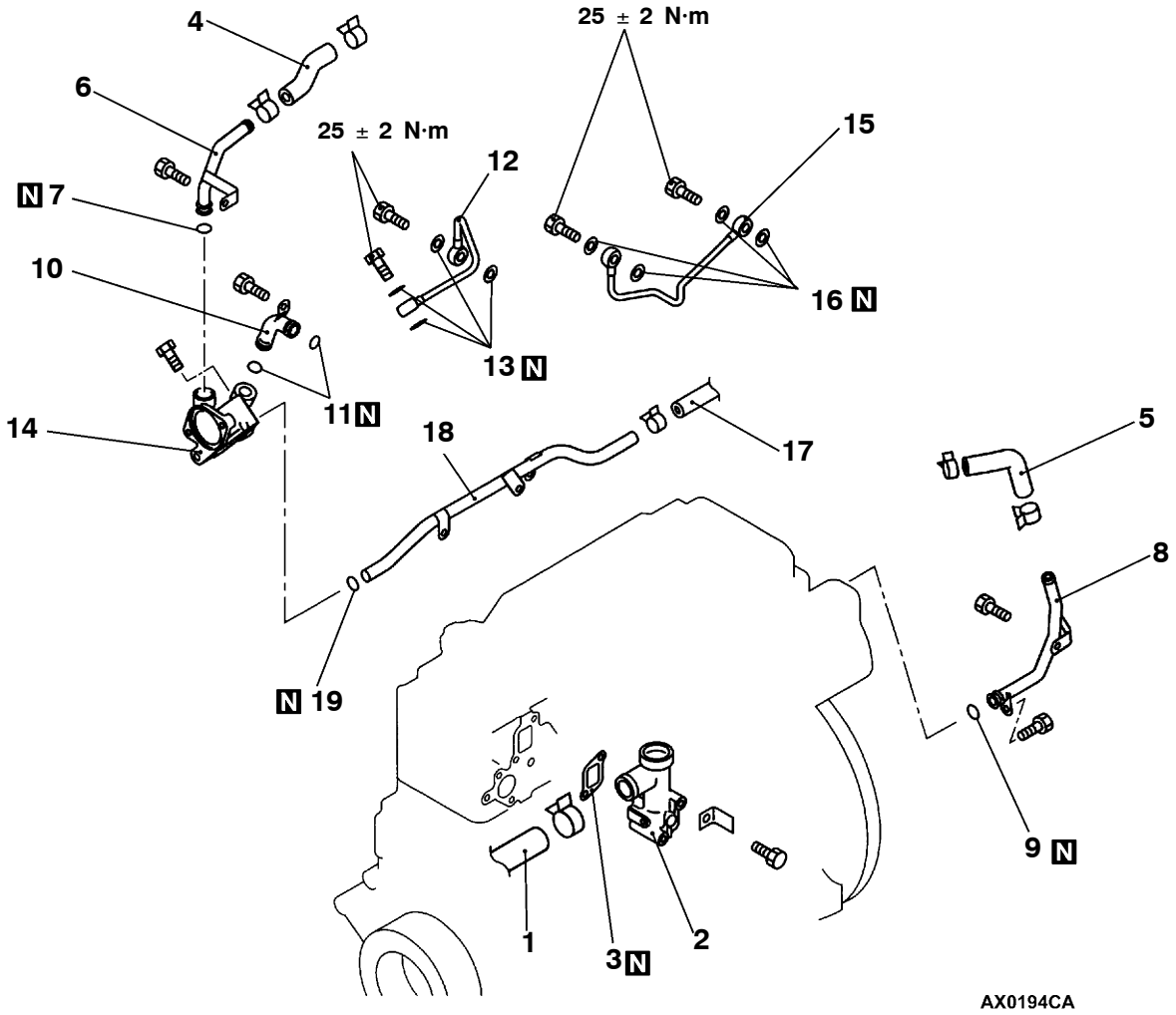


**Removal steps**

◀A▶ ▶B◀ 1. Radiator upper hose connection
2. Water outlet pipe
3. Gasket
4. Water hose
5. Water hose
- Air cleaner assembly
- Thermostat
- EGR valve, EGR cooler (Refer to GROUP 17.)

6. EGR water outlet pipe
▶A◀ 7. O-ring
8. EGR water inlet pipe
▶A◀ 9. O-ring
10. Bypass pipe
▶A◀ 11. O-ring
- Turbocharger heat cover upper (Refer to GROUP 15.)

12. Turbocharger water outlet pipe
13. Gasket
14. Thermostat case
15. Turbocharger water inlet pipe
16. Gasket
- Exhaust manifold (Refer to GROUP 15.)

17. Heater hose connection
18. Heater return pipe
▶A◀ 19. O-ring

Purchased from www.WorkshopManuals.co.uk

www.WorkshopManuals.co.uk

## REMOVAL SERVICE POINT

### ◀A▶ RADIATOR UPPER HOSE DISCONNECTION

After making mating marks on the radiator hose and the hose clamp,disconnect the radiator hose.

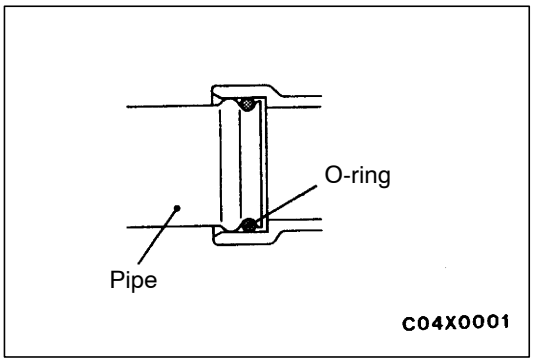


## INSTALLATION SERVICE POINTS

### ▶A◀ O-RING INSTALLATION

Insert the O-ring to pipe, and coat the outer circumference of the O-ring with water.

**Caution**
**Care must be taken not to permit engine oil or other greases to adhere to the o-ring.**

### ▶B◀ RADIATOR UPPER HOSE CONNECTION

1. Insert each hose as far as the projection of the water inlet fitting.
2. Align the mating marks on the radiator hose and hose clamp, and then connect the radiator hose.

Purchased from www.WorkshopManuals.co.uk

www.WorkshopManuals.co.uk

# INTAKE AND EXHAUST

**Click on the applicable bookmark to selected the required model year.**

Purchased from www.WorkshopManuals.co.uk

www.WorkshopManuals.co.uk


# INTAKE AND EXHAUST

## CONTENTS


SERVICE SPECIFICATIONS . . . . . 2

SEALANT . . . . . 2

SPECIAL TOOL . . . . . 2

ON-VEHICLE SERVICE . . . . . 2

- Intake Manifold Vacuum Check <6G7> . . . . . 2
- Turbocharger Supercharging Check <4D5> . . . . . 2
- Waste Gate Actuator Check <4D5> . . . . . 3
- Waste Gate Actuator Check <4M4> . . . . . 3

AIR CLEANER . . . . . 4

INTERCOOLER<4D5, 4M4> . . . . . 5

INTAKE MANIFOLD <6G7> . . . . . 6

INTAKE MANIFOLD AND THROTTLE BODY <4M4> . . . . . 8

EXHAUST MANIFOLD <6G7> . . . . . 11

INTAKE MANIFOLD AND EXHAUST MANIFOLD, TURBOCHARGER <4D5> . . . 12

TURBOCHARGER AND EXHAUST MANIFOLD <4M4> . . . . . 14

TURBOCHARGER <4D5> . . . . . 16

TURBOCHARGER <4M4> . . . . . 19

EXHAUST PIPE AND MAIN MUFFLER <6G7> . . . . . 21

EXHAUST PIPE AND MAIN MUFFLER <4D5> . . . . . 23

EXHAUST PIPE AND MAIN MUFFLER <4M4> . . . . . 25


Purchased from www.WorkshopManuals.co.uk

www.WorkshopManuals.co.uk

# SERVICE SPECIFICATIONS

| Items | | Standard value | Limit |
|---|---|---|---|
| Waste gate actuator activation pressure kPa | 4D5 | Approx. 92 | - |
| | 4M4 | Approx. 161 | - |
| Manifold distortion of the installation surface mm | | 0.15 or less | 0.20 |

# SEALANT

| Item | Specified sealant | Remarks |
|---|---|---|
| Thread of the intake manifold mounting bolts | 3M Stud Locking No.4170 or equivalent | Anaerobic sealant |

# SPECIAL TOOL

| Tool | Number | Name | Use |
|---|---|---|---|
| 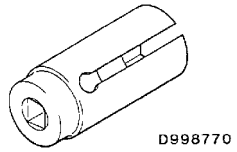  | MD998770 | Oxygen sensor wrench | Removal/Installation of oxygen sensor <6G7> |

# ON-VEHICLE SERVICE

## INTAKE MANIFOLD VACUUM CHECK <6G7>

Refer to GROUP 11A - On-vehicle Service

## TURBOCHARGER SUPERCHARGING CHECK <4D5>

**Caution**
**Conduct the driving test in a location where driving at full acceleration can be done with safety. Two person should be in the vehicle when the test is conducted; the person in the passenger seat should read the indications shown by the pressure meter.**

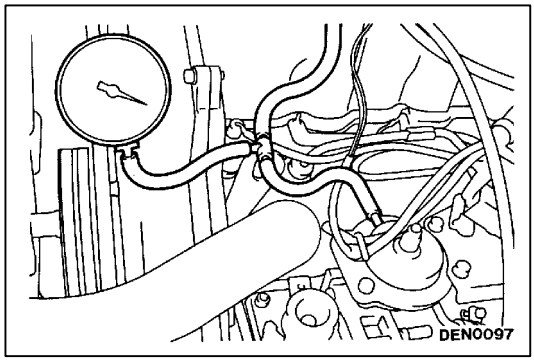


1. Remove the boost compensator hose from the fuel injection pump, and install a pressure gauge as shown in the illustration.
2. Drive at full-throttle acceleration in second gear and then measure the supercharging when the engine speed in about 3,000 r/min.
3. When the indicated supercharging does not become positive pressure, check the following items.
   - Malfunction of the waste gate actuator
   - Leakage of supercharging pressure
   - Malfunction of the turbocharger

Purchased from www.WorkshopManuals.co.uk

www.WorkshopManuals.co.uk

4. When the indicated supercharging is 84 kPa or more, supercharging control may be faulty, therefore check the followings.
   - Disconnection or cracks of the waste gate actuator rubber hose.
   - Malfunction of the waste gate actuator.
   - Malfunction of the waste gate valve.

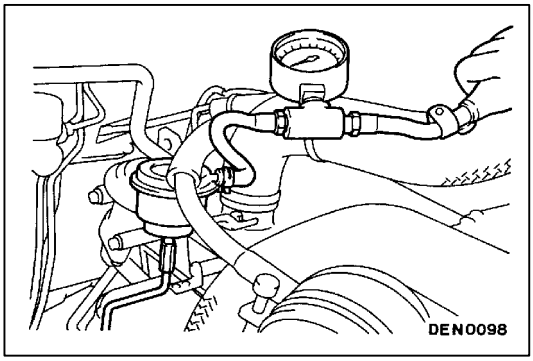


## WASTE GATE ACTUATOR CHECK <4D5>

1. Connect a manual pump (pressure-application type) to nipple.
2. While gradually applying pressure, check the pressure that begins to activate (approx. 1 mm stroke) the waste gate actuator rod.

   **Standard value: Approx. 92 kPa**

   **Caution**
   **In order to avoid damage to the diaphragm, do not apply a pressure of 105 kPa or higher.**
3. If there is a significant deviation from the standard value, check the actuator or the waste gate valve: replace if necessary.

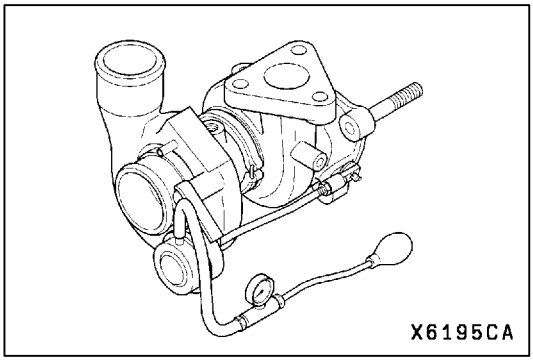


## WASTE GATE ACTUATOR CHECK <4M4>

1. Connect a manual pump (pressure-application type) to nipple.
2. While gradually applying pressure, check the pressure that begins to activate (approx. 1 mm stroke) the waste gate actuator rod.

   **Standard value: Approx. 161 kPa**

   **Caution**
   **In order to avoid damage to the diaphragm, do not apply a pressure of 181 kPa or higher.**
3. If there is a significant deviation from the standard value, check the actuator or the waste gate valve: replace if necessary.

Purchased from www.WorkshopManuals.co.uk

www.WorkshopManuals.co.uk

# AIR CLEANER

## REMOVAL AND INSTALLATION

**Caution**
**Parts marked by * are made of recycled-paper mixed plastic material, so observe the following precautions.**
**1. Avoid any shock or load to these parts when removing and installing them.**
**2. Engage the case hinges securely when assembling these parts.**

NOTE
Parts marked by * are made of recycled-paper mixed plastic material, so can be disposed of by incineration.

**<6G7>**

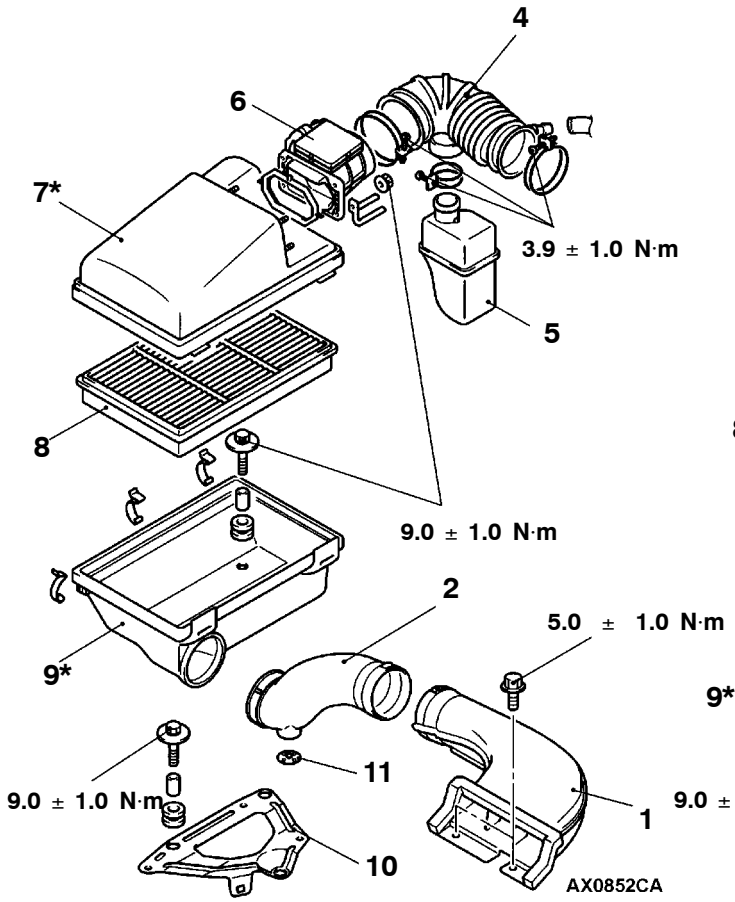


**<4D5, 4M4>**

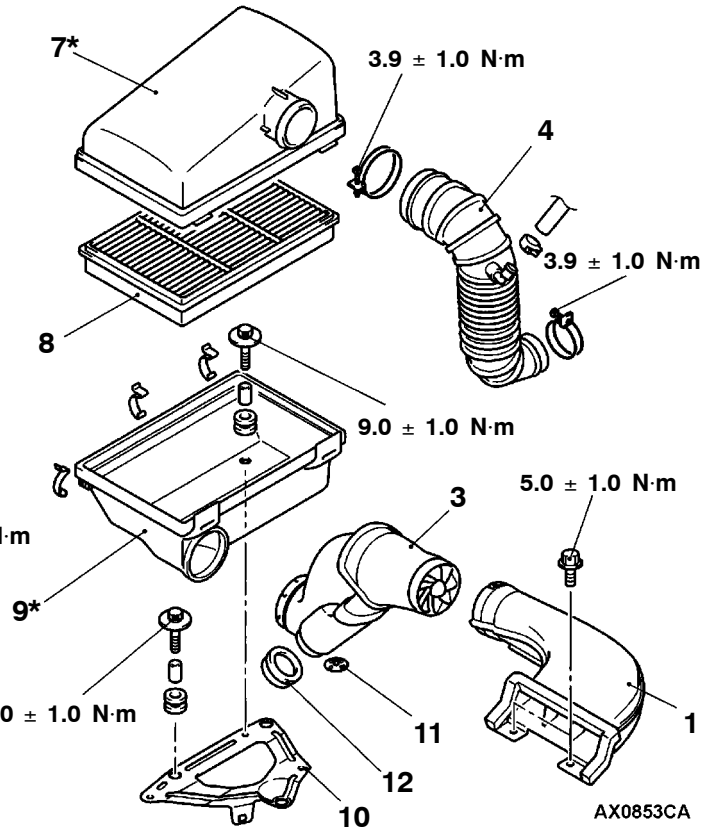


**Removal steps**

1. Air duct (A)
2. Air duct (B) <6G7>
3. Pre-cleaner assembly <4D5, 4M4>
4. Air intake hose
5. Resonator <6G7>
6. Air flow sensor assembly <6G7>
7. Air cleaner cover
8. Air cleaner element
9. Air cleaner body
10. Air cleaner bracket
11. Unloader valve
12. Unloader valve <4D5, 4M4>

Purchased from www.WorkshopManuals.co.uk

www.WorkshopManuals.co.uk

# INTERCOOLER <4D5, 4M4>

## REMOVAL AND INSTALLATION

**Pre-removal and Post-installation Operation**
- Air Cleaner Removal and Installation (Refer to P.15-4)
- Skid Plate and Under Cover Removal and Installation
- Radiator Shroud Cover Removal and Installation (Refer to GROUP 14.)

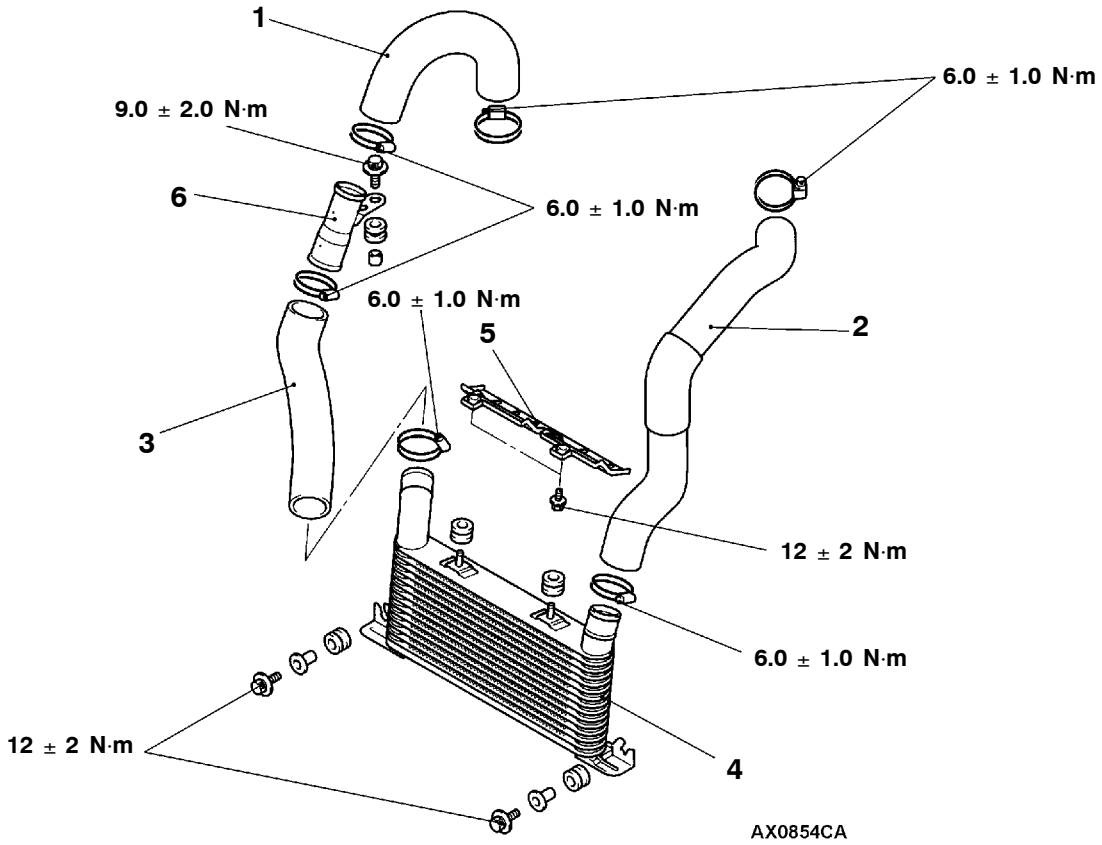


**Removal steps**

1. Intercooler air hose
2. Intercooler air hose
3. Intercooler air hose
4. Intercooler assembly
5. Deflector plate
6. Intercooler air pipe

## INSPECTION

- Check the intercooler fins for bending damage or foreign matter.
- Check the intercooler hoses for cracking, damage or wear.

Purchased from www.WorkshopManuals.co.uk

www.WorkshopManuals.co.uk

# INTAKE MANIFOLD <6G7>

## REMOVAL AND INSTALLATION

**Pre-removal and Post-installation Operation**
- Coolant Draining and Refilling (Refer to GROUP 14 - On-vehicle Service.)
- Engine Cover Removal and Installation (Refer to GROUP 11A - Timing Belt.)
- Air Cleaner Removal and Installation (Refer to P.15-4.)
- EGR Valve Removal and Installation (Refer to GROUP 17.)
- Ignition Coil Removal and Installation (Refer to GROUP 16.)
- Throttle Body Removal and Installation (Refer to GROUP 13A.)

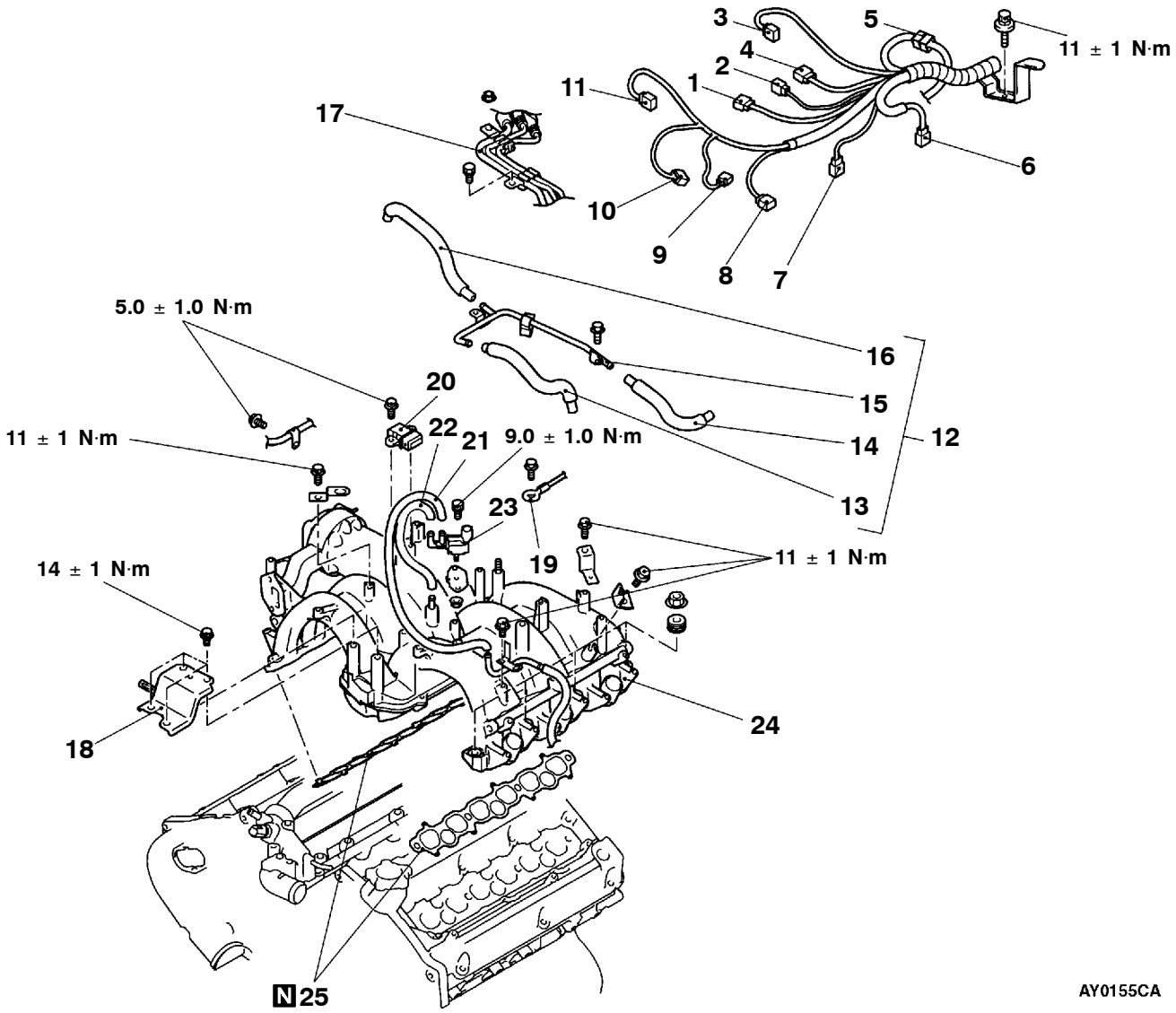


Purchased from www.WorkshopManuals.co.uk

www.WorkshopManuals.co.uk

**Removal step**

1. Ignition failure sensor connector
2. Detonation sensor connector
3. Throttle position sensor connector
4. Control harness and injector harness connection
5. Control harness and ignition coil harness connection
6. Control harness and fuel pressure sensor harness and camshaft position sensor harness connection
7. Purge solenoid valve connector
8. Crank angle sensor connector
9. Water temperature gauge unit
10. Engine coolant temperature sensor connector
11. Throttle control servo connector
12. PCV hose and pipe assembly
13. PCV hose A
14. PCV hose C
15. PCV hose B
16. PCV pipe
17. Fuel pipe clamp
18. Water outlet fitting bracket
19. Earth cable connection
20. Ignition failure sensor
21. Vacuum hose
22. Purge hose
23. Purge control solenoid valve
24. ▶A◀ Intake manifold
25. Intake manifold gasket

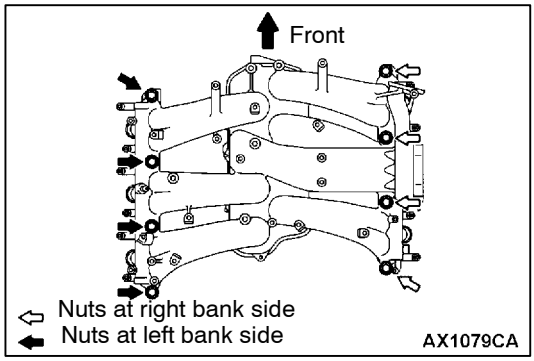


## REMOVAL SERVICE POINT

### ▶A◀ INTAKE MANIFOLD INSTALLATION

Tighten the intake manifold mounting nuts in the order shown.

NOTE
Tighten the inside nuts first, and then outside nuts.

| Order | Nuts to be tightened | Tightening torque N·m |
|---|---|---|
| 1 | Nuts at right bank side | 6.5 ± 1.5 |
| 2 | Nuts at left bank side | 22 ± 1 |
| 3 | Nuts at right bank side | 22 ± 1 |
| 4 | Nuts at left bank side | 22 ± 1 |

## INSPECTION

Check the following points; replace the part if a problem is found.

### INTAKE MANIFOLD CHECK

1. Check for damage or cracking of any part.
2. Clogging of the negative pressure (vacuum) outlet port, or clogging of the gas passages.
3. Check distortion of installation surface with straight edge and thickness gauge.

   **Standard value: 0.15 mm or less**

   **Limit: 0.20 mm**

Purchased from www.WorkshopManuals.co.uk

www.WorkshopManuals.co.uk

# INTAKE MANIHOLD AND THROTTLE BODY <4M4>

## REMOVAL AND INSTALLATION

**Pre-removal Operations**
- Engine Cover Removal
  (Refer to GROUP 11B - Camshaft.)
- Battery and Battery Tray Removal
- Fuel Filter Removal (Refer to GROUP 13C.)
- Skid Plate And Under Cover Removal

**Post-installation Operations**
- Skid Plate and Under Cover Installation
- Fuel Filter Installation (Refer to GROUP 13C.)
- Battery and Battery Tray Installation
- Evacuation of Air from Fuel Line
  (Refer to GROUP 13B – On-vehicle Service.)
- Engine Cover Installation
  (Refer to GROUP 11B - Camshaft.)

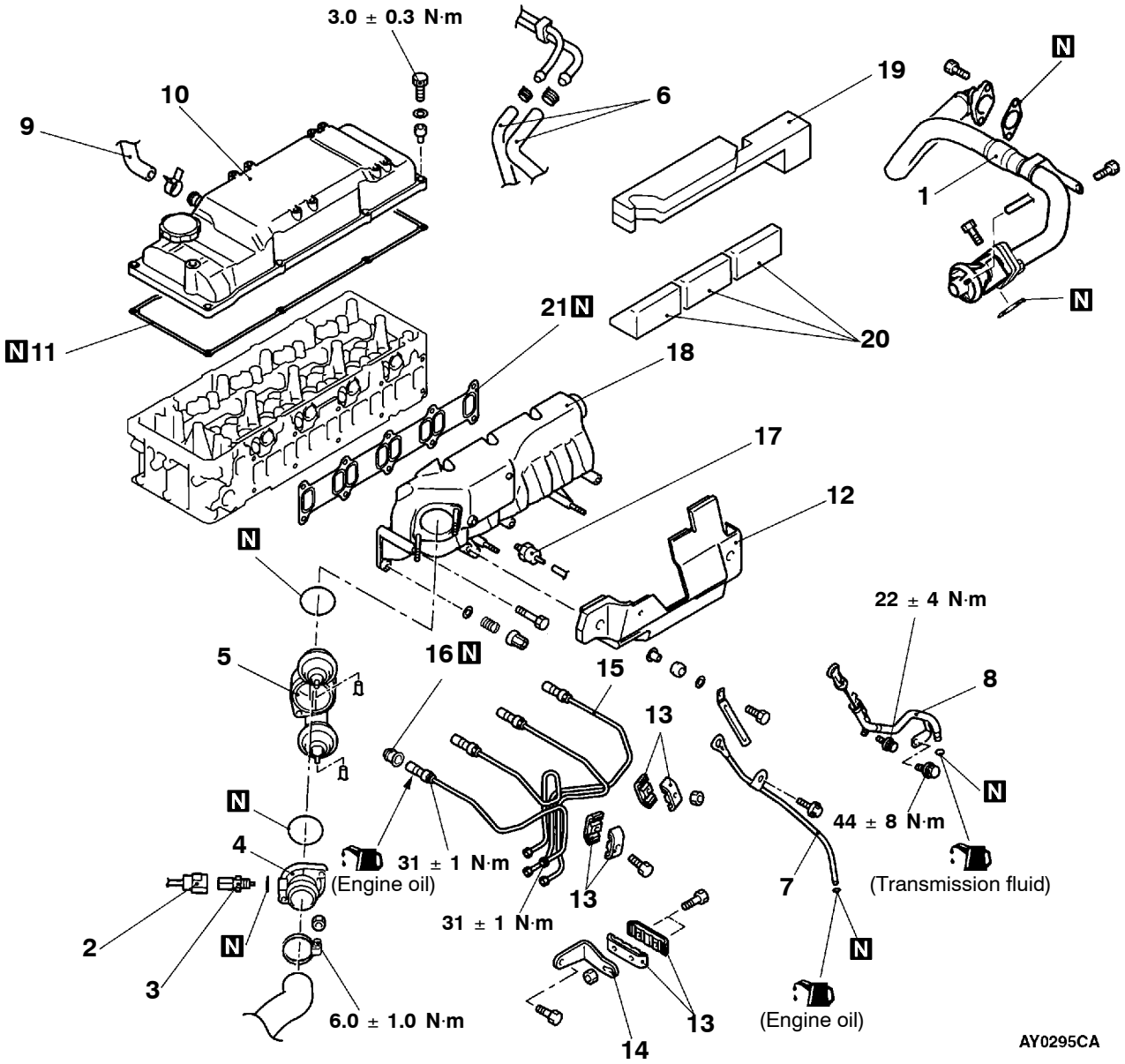


Purchased from www.WorkshopManuals.co.uk

www.WorkshopManuals.co.uk

**Removal steps**

1. EGR valve and pipe assembly
2. Boost air temperature sensor connector
3. Boost air temperature sensor
4. Intake air fitting
5. Throttle body assembly
6. Fuel hose connection
7. Engine oil level gauge and guide
8. ATF level gauge and guide
9. Breather hose connection
10. Rocker cover
11. Rocker cover gasket
12. Intake manifold cover
13. Clamp
14. Injection pipe stay
15. ◀A▶ ▶B◀ Injection pipe
16. ▶B◀ Injection pipe seal
17. Gas filter assembly
18. ▶A◀ Intake manifold
19. Spacer A
20. Spacer B
21. Intake manifold gasket

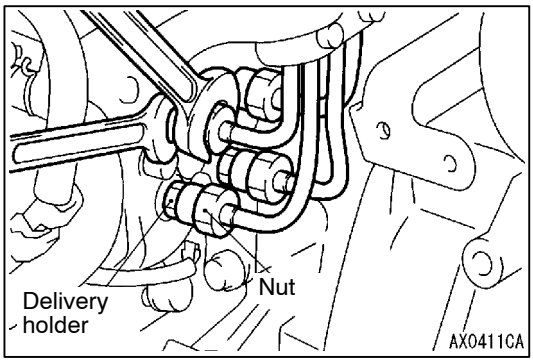


## REMOVAL SERVICE POINT

### ◀A▶ INJECTION PIPE REMOVAL

Hold the injection pump side delivery holder with a open-end wrench, and loosen the nut.

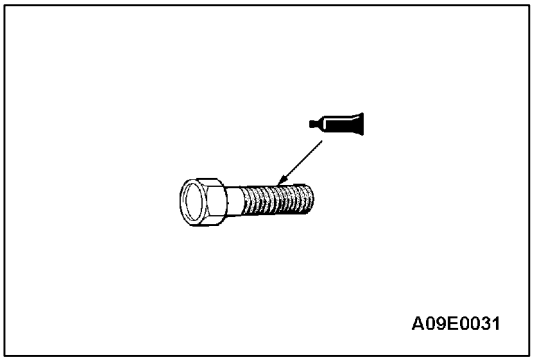


## INSTALLATION SERVICE POINTS

### ▶A◀ INTAKE MANIFOLD INSTALLATION

1. Remove the old sealant from the intake manifold mounting bolt thread.
2. Use a tap (M8×1.25) to remove the old sealant from the bolt hole, and clean by using compressed air.
3. Apply the specified sealant to the intake manifold mounting bolt thread, and install the intake manifold by using the mounting bolts.

   **Specified sealant:**
   **3M Stud Locking No. 4170 or equivalent**

Purchased from www.WorkshopManuals.co.uk

www.WorkshopManuals.co.uk

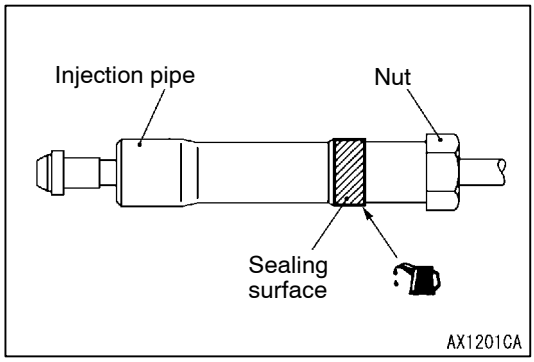


**▶B◀ INJECTION PIPE SEAL/INJECTION PIPE INSTALLATION**

1. Apply a small amount of engine oil to a new injection pipe seal, and install it, being careful not to damage it.
2. Apply a small amount of engine oil to the injection pipe sealing surface, and then connect the injection pipes.
3. Use a spanner to hold the delivery holder at the injection pump side in the same manner as removal,and then install the injection pipe nuts.
4. Tighten the injection pipe nut to the specified torque.
   **Tightening torque: 31 ± 1 N·m**

## INSPECTION

### INTAKE MANIFOLD CHECK

1. Check for damage or cracking of any part.
2. Clogging of the negative pressure (vacuum) outlet port, or clogging of the gas passages.
3. Check distortion of installation surface with straight edge and thickness gauge.

   **Standard value: 0.15 mm or less**

   **Limit: 0.20 mm**

Purchased from www.WorkshopManuals.co.uk

www.WorkshopManuals.co.uk

# EXHAUST MANIFOLD <6G7>

## REMOVAL AND INSTALLATION

**Pre-removal and Post-installation Operations**
- Engine Cover Removal And Installation (Refer to GROUP 11A - Timing Belt)
- Battery, Battery Tray Removal And Installation
- Air Cleaner Assembly Removal And Installation (Refer to P.15-4.)
- Skid Plate And Under Cover Removal And Installation
- Front Exhaust Pipe Removal And Installation (Refer to P.15-21.)
- Front Catalytic Converter Removal And Installation (Refer to GROUP 17.)

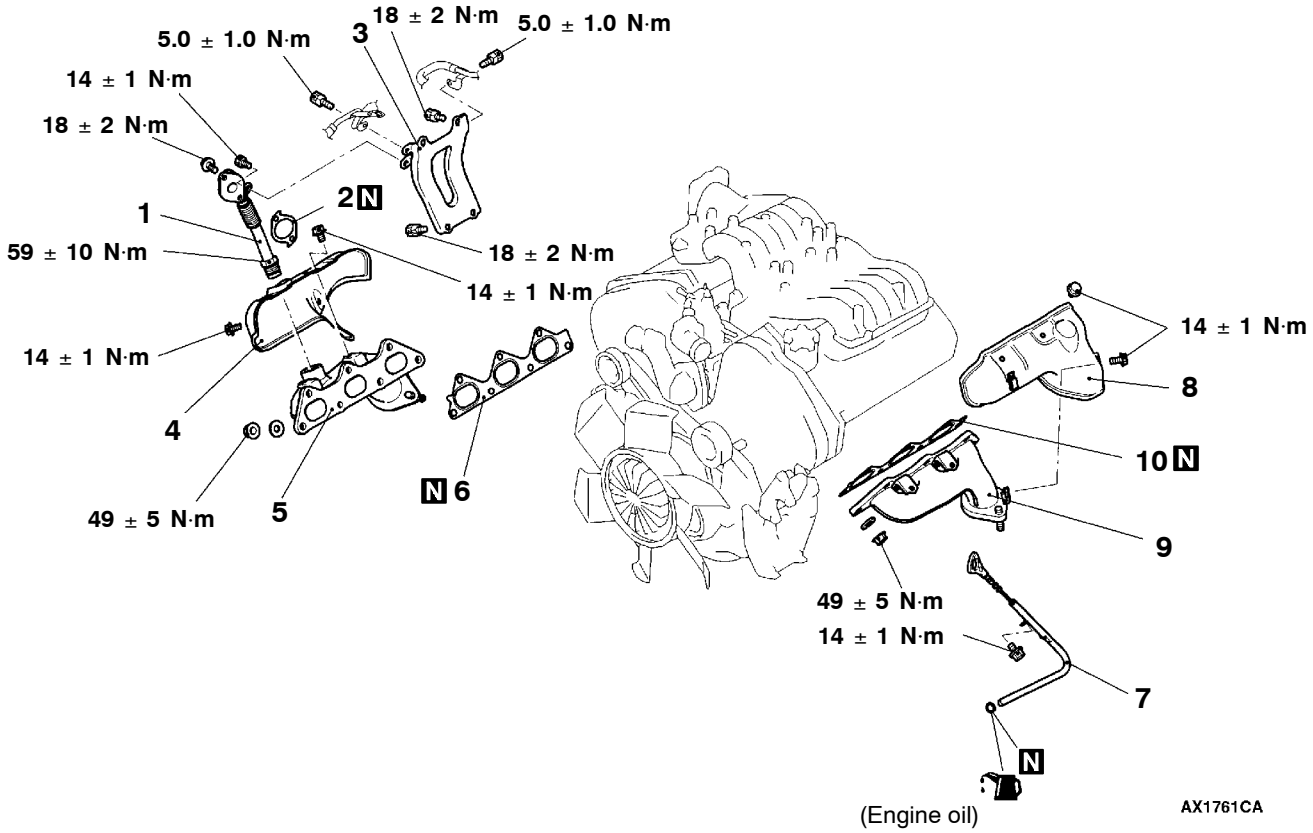


**Removal steps**

1. EGR pipe
2. EGR pipe gasket
3. Throttle body stay
4. Heat protector
5. Exhaust manifold
6. Exhaust manifold gasket
7. Engine oil level gauge and guide
8. Heat protector
9. Exhaust manifold
10. Exhaust manifold gasket

## INSPECTION

Check the following points; replace the part if a problem is found.

### EXHAUST MANIFOLD CHECK

1. Check for damage or cracking of any part.
2. Using a straight edge and a thickness gauge, check for distortion of the cylinder head installation surface.

   **Standard value: 0.15 mm or less**

   **Limit: 0.20 mm**

Purchased from www.WorkshopManuals.co.uk

www.WorkshopManuals.co.uk

# INTAKE AND EXHAUST MANIFOLD, TURBOCHARGER <4D5>

## REMOVAL AND INSTALLATION

**Pre-removal and Post-installation Operations**
- Engine Coolant Draining and Refilling (Refer to GROUP 14 - On-vehicle Service.)
- Battery, Battery Tray Removal and Installation
- Air Cleaner Assembly Removal and Installation (Refer to P.15-4.)
- Skid Plate and Under Cover Removal and Installation
- Front Exhaust Pipe Removal and Installation (Refer to P.15-23.)

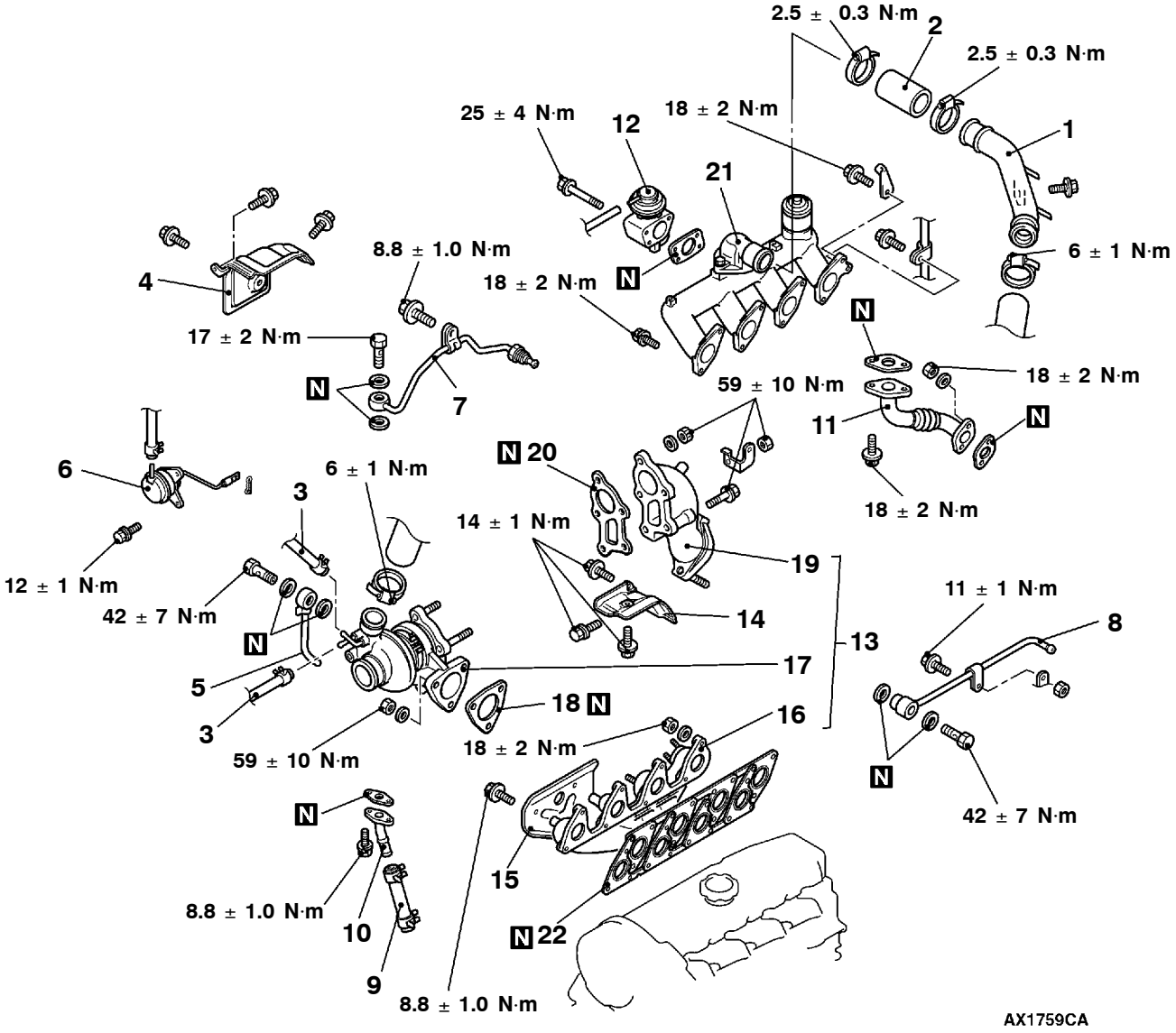


**Removal steps**

1. Air pipe
2. Air intake hose
3. Vacuum hose connection
4. Turbocharger heat protector
5. Water pipe (B) connection
6. Waste gate actuator
7. Oil pipe
8. Water pipe (A)
9. Oil return hose
10. Oil return pipe
11. EGR pipe
12. EGR valve
13. Exhaust manifold and turbocharger assembly
14. Exhaust fitting heat protector
15. Exhaust manifold heat protector
16. Exhaust manifold
▶A◀ 17. Turbocharger assembly
18. Turbocharger gasket
19. Exhaust fitting assembly
20. Exhaust fitting gasket
21. Intake manifold
22. Intake and exhaust manifold gasket

Purchased from www.WorkshopManuals.co.uk

www.WorkshopManuals.co.uk

## INSTALLATION SERVICE POINT

### ▶A◀ TURBOCHARGER ASSEMBLY INSTALLATION

1. Check the internal surface, the eye bolt and the mating surface of the oil pipe and water pipe for clogging, and clean if necessary.
2. If deposits of carbon are accumulated on the turbocharger oil passage, remove them and clean using the compressed air.

   **Caution**
   **Be careful not to allow foreign material to enter the turbocharger.**

3. Add clean engine oil through the oil feed pipe port on the turbocharger.

## INSPECTION

### TURBOCHARGER ASSEMBLY CHECK

- Visually check the turbine wheel and the compressor wheel for cracking or other damage.
- Check whether the turbine wheel and the compressor wheel can be easily turned by hand.
- Check for oil leakage from the turbocharger assembly.
- Check whether or not the waste gate valve remains open. If any problem is found, replace the part after disassembly.

### OIL PIPE AND OIL RETURN PIPE CHECK

Check the oil pipe and oil return pipe for clogging, bending, or other damage. If there is clogging, clean it.

### EXHAUST MANIFOLD CHECK

Damage or cracking of any part.

Purchased from www.WorkshopManuals.co.uk

www.WorkshopManuals.co.uk

# TURBOCHARGER AND EXHAUST MANIFOLD <4M4>

## REMOVAL AND INSTALLATION

**Pre-removal and Post-installation Operations**
- Engine Coolant Draining and Refilling (Refer to GROUP 14 - On-vehicle Service.)
- Engine Cover Removal and Installation (Refer to GROUP 11C – Camshaft)
- Air cleaner Assembly Removal and Installation (Refer to P.15-4.)
- Skid Plate and Under Cover Removal and Installation
- Front Exhaust Pipe Removal and Installation (Refer to P.15-25.)

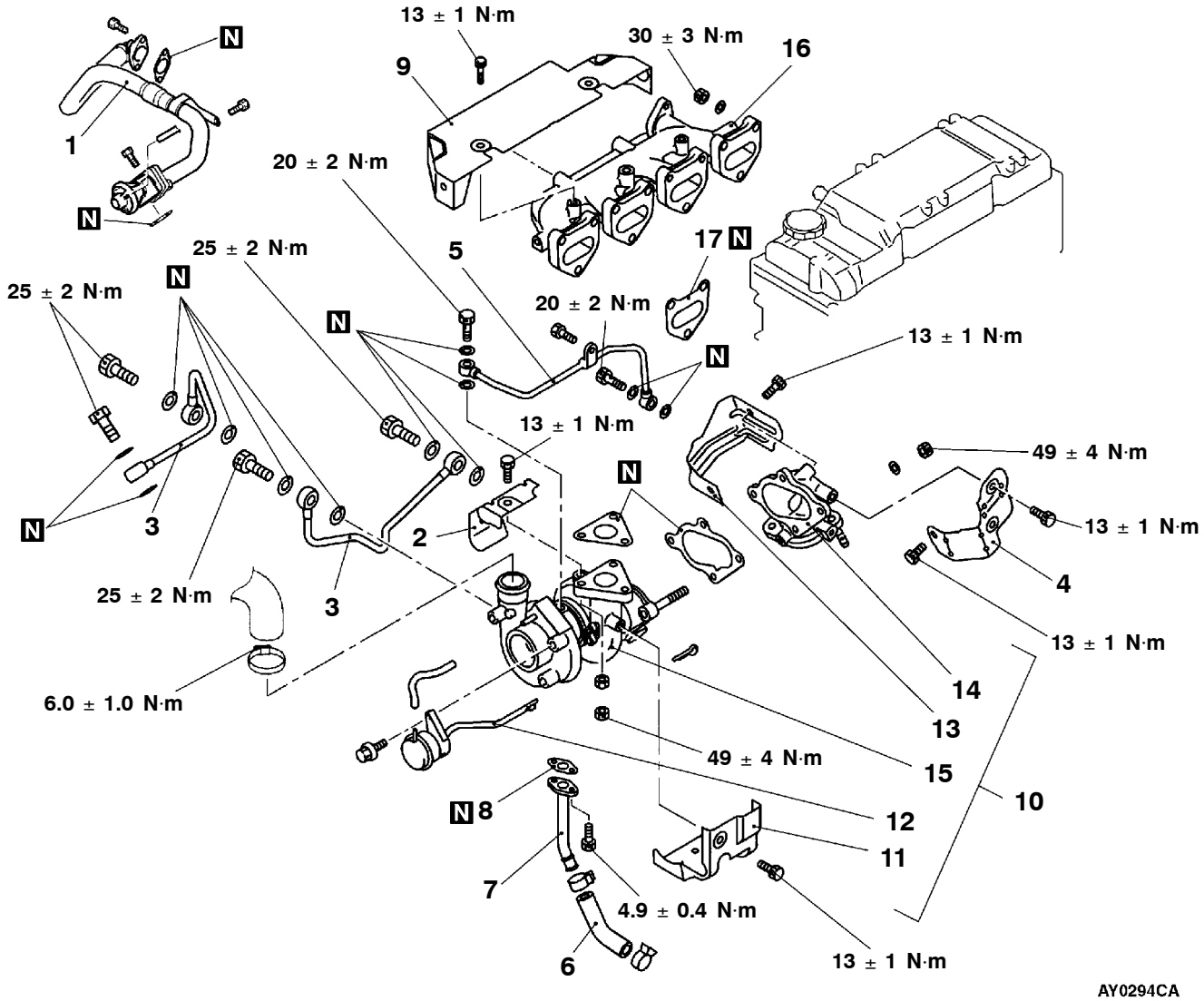


**Removal steps**

1. EGR valve and pipe assembly
2. Turbocharger cover
3. Water pipe
4. Turbocharger cover
5. Oil pipe
6. Oil return hose
7. Oil return pipe
8. Oil return pipe gasket
9. Heat protector
10. Turbocharger and exhaust fitting assembly
11. Turbocharger cover
12. Waste gate actuator
13. Turbocharger cover
14. Exhaust fitting
▶A◀ 15. Turbocharger assembly
16. Exhaust manifold
17. Exhaust manifold gasket

Purchased from www.WorkshopManuals.co.uk

www.WorkshopManuals.co.uk

## INSTALLATION SERVICE POINT

### ▶A◀ TURBOCHARGER ASSEMBLY INSTALLATION

1. Check the internal surface, the eye bolt and the mating surface of the oil pipe and water pipe for clogging, and clean if necessary.
2. If deposits of carbon are accumulated on the turbocharger oil passage, remove them and clean using the compressed air.

   **Caution**
   **Be careful not to allow foreign material to enter the turbocharger.**

3. Add clean engine oil through the oil feed pipe port on the turbocharger.

## INSPECTION

Check the following points; replace the part if a problem is found.

### EXHAUST MANIFOLD CHECK

1. Check for damage or cracking of any part.
2. Using a straight edge and a thickness gauge, check for distortion of the cylinder head installation surface.

   **Standard value: 0.15 mm or less**

   **Limit: 0.20 mm**

### TURBOCHARGER ASSEMBLY CHECK

- Visually check the turbine wheel and the compressor wheel for cracking or other damage.
- Check whether the turbine wheel and the compressor wheel can be easily turned by hand.
- Check for oil leakage from the turbocharger assembly.
- Check whether or not the waste gate valve remains open. If any problem is found, replace the part after disassembly.

### OIL PIPE AND OIL RETURN PIPE CHECK

Check the oil pipe and oil return pipe for clogging, bending, or other damage. If there is clogging, clean it.

### EXHAUST MANIFOLD CHECK

Damage or cracking of any part.

Purchased from www.WorkshopManuals.co.uk

www.WorkshopManuals.co.uk

# TURBOCHARGER <4D5>

## DISASSEMBLY AND REASSEMBLY

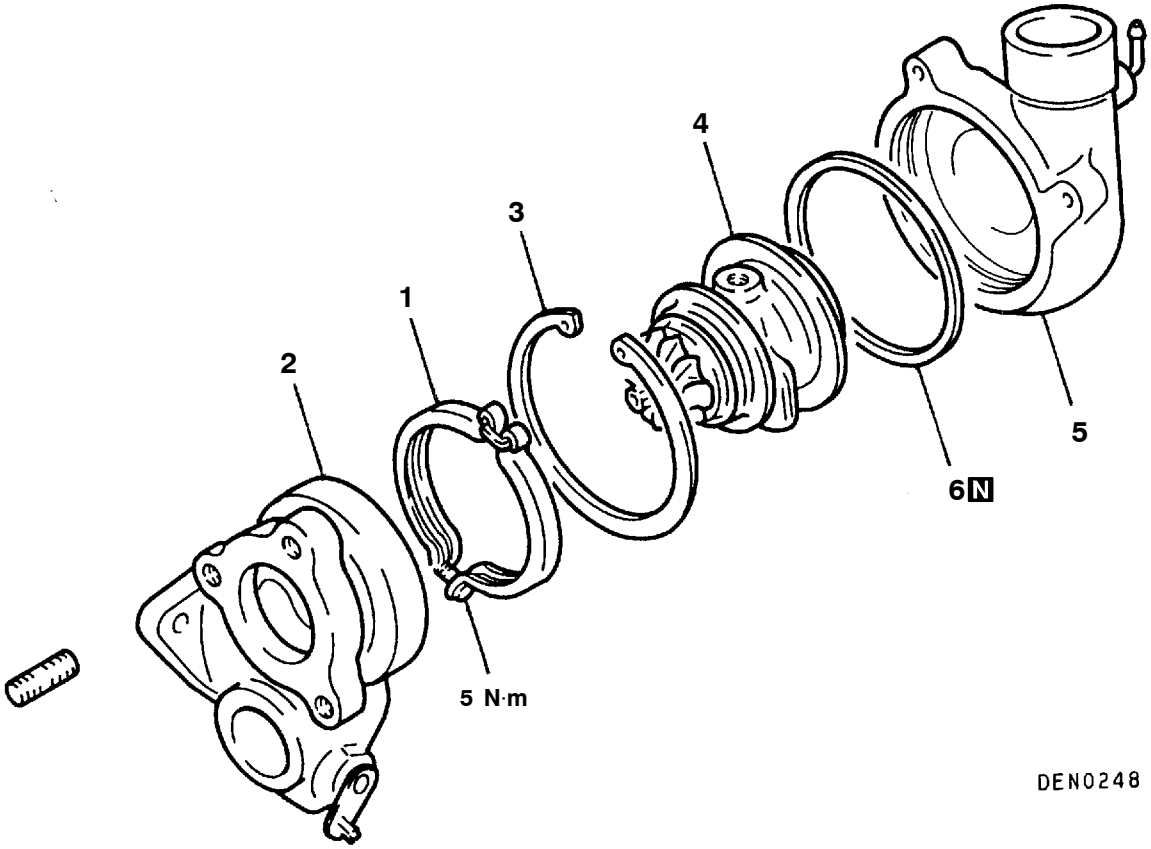


**Disassembly steps**

| | | |
|---|---|---|
| | ▶E◀ | 1. Coupling |
| | ▶D◀ | 2. Turbine housing |
| ◀A▶ | ▶C◀ | 3. Snap ring |
| ◀B▶ | ▶B◀ | 4. Turbine wheel assembly |
| | | 5. Compressor cover |
| | ▶A◀ | 6. O-ring |

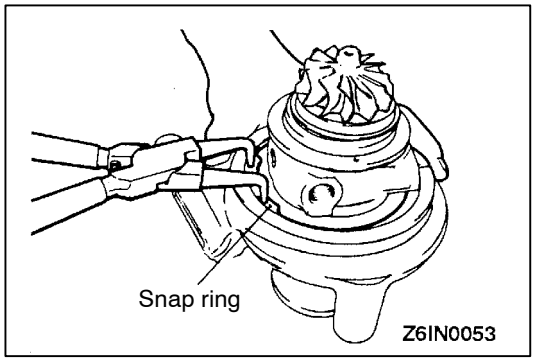


## DISASSEMBLY SERVICE POINTS

### ◀A▶ SNAP RING REMOVAL

Lay the unit with the compressor cover side facing down and using snap ring pliers, remove the compressor cover attaching snap ring.

**Caution**

**When removing the snap ring, hold it with fingers to prevent it from springing away.**

Purchased from www.WorkshopManuals.co.uk

www.WorkshopManuals.co.uk

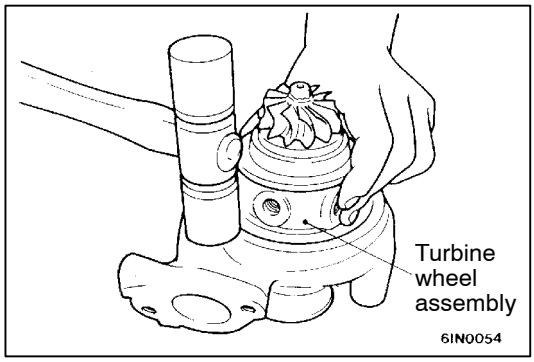


### ◀B▶ TURBINE WHEEL ASSEMBLY REMOVAL

Remove the turbine wheel assembly, striking the circumference of the compressor cover with a plastic hammer. The turbine wheel assembly may be a little hard to remove due to an O-ring put on the outer circumference.

## CLEANING

1. Use a clean cleaning oil commercially available. Do not use corrosive cleaning oils as they could damage to some parts.
2. Use a plastic scraper or hard brush to clean aluminum parts.

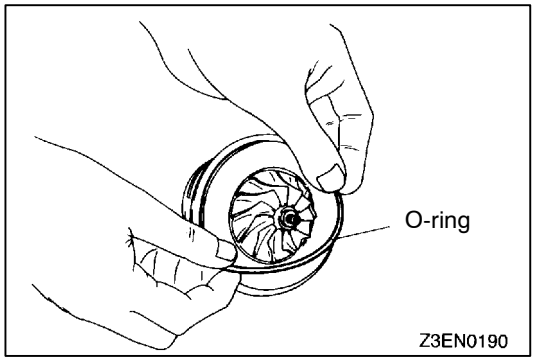


## REASSEMBLY SERVICE POINTS

### ▶A◀ O-RING INSTALLATION

Apply a light coat of engine oil to a new O-ring and fit in the turbine wheel assembly groove.

**Caution**
**When installing the O-ring, use care not to damage it. A damaged O-ring causes oil leaks.**

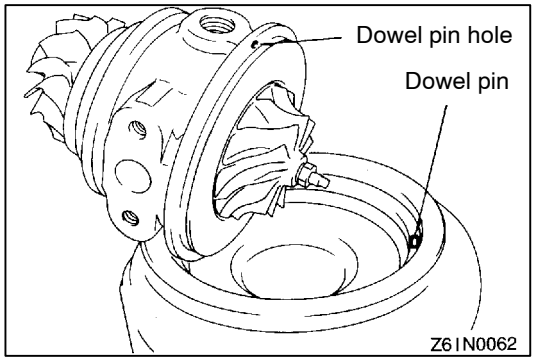


### ▶B◀ TURBINE WHEEL ASSEMBLY

1. Apply a light coat of engine oil to the periphery of the O-ring.
2. Install the turbine wheel assembly to the compressor cover in relation to the dowel pin.

   **Caution**
   **Use care not to damage the blades of turbine wheel and compressor wheel.**

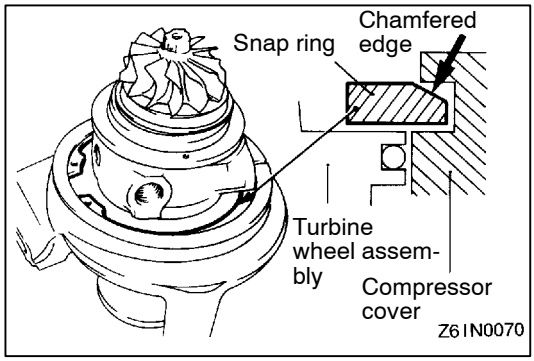


### ▶C◀ SNAP RING INSTALLATION

Lay the assembly with the compressor cover facing down and fit the snap ring.

**Caution**
**Fit the snap ring with its chamfered side facing up.**

Purchased from www.WorkshopManuals.co.uk

www.WorkshopManuals.co.uk

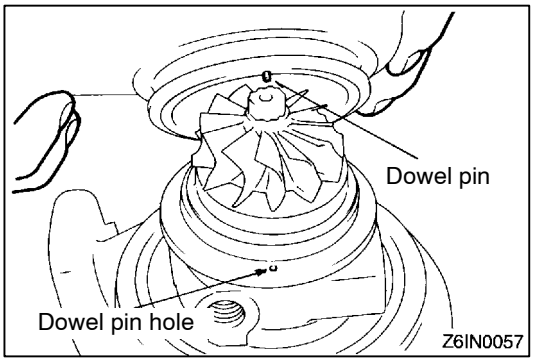


### ▶D◀ TURBINE HOUSING INSTALLATION

Install the turbine housing in relation to the dowel pin.

**Caution**
**Use care not to damage the blades of turbine wheel.**

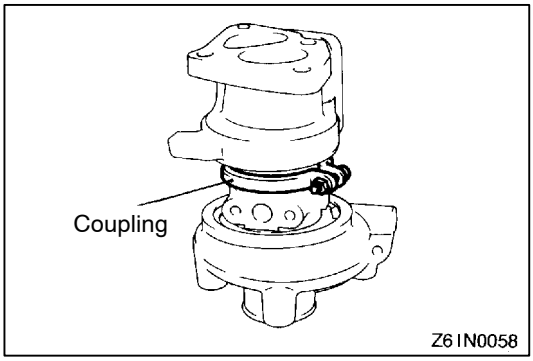


### ▶E◀ COUPLING INSTALLATION

Install the coupling and tighten to specified torque.

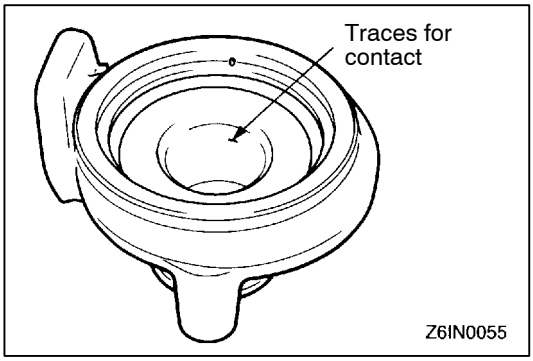


## INSPECTION

### TURBINE HOUSING

1. Check the housing for traces of contact with the turbine wheel, cracks due to overheating, pitching, deformation and other damage. Replace with a new turbine housing if cracked.
2. Operate the waste gate valve lever manually to check that the gate can be operated and closed smoothly.

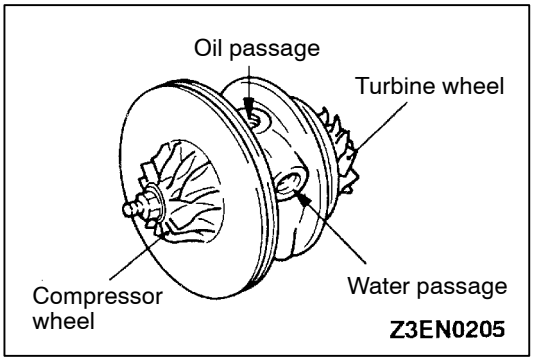


### COMPRESSOR COVER

Check the compressor cover for traces of contact with the compressor wheel and other damage.

### TURBINE WHEEL ASSEMBLY

1. Check the turbine and compressor wheel blades for bend, burr, damage, corrosion and traces of contact on the back side and replace if defective.
2. Check the oil passage of the turbine wheel assembly for deposit and clogging.
3. In the case of water cooled type, check also the water passage for deposit and clogging.
4. Check the turbine wheel and compressor wheel for light and smooth turning.

### OIL PIPE/OIL RETURN PIPE

Correct or replace the oil pipe and oil return pipe if clogged, collapsed, deformed or otherwise damaged.

Purchased from www.WorkshopManuals.co.uk

www.WorkshopManuals.co.uk

# TURBOCHARGER <4M4>

## DISASSEMBLY AND REASSEMBLY

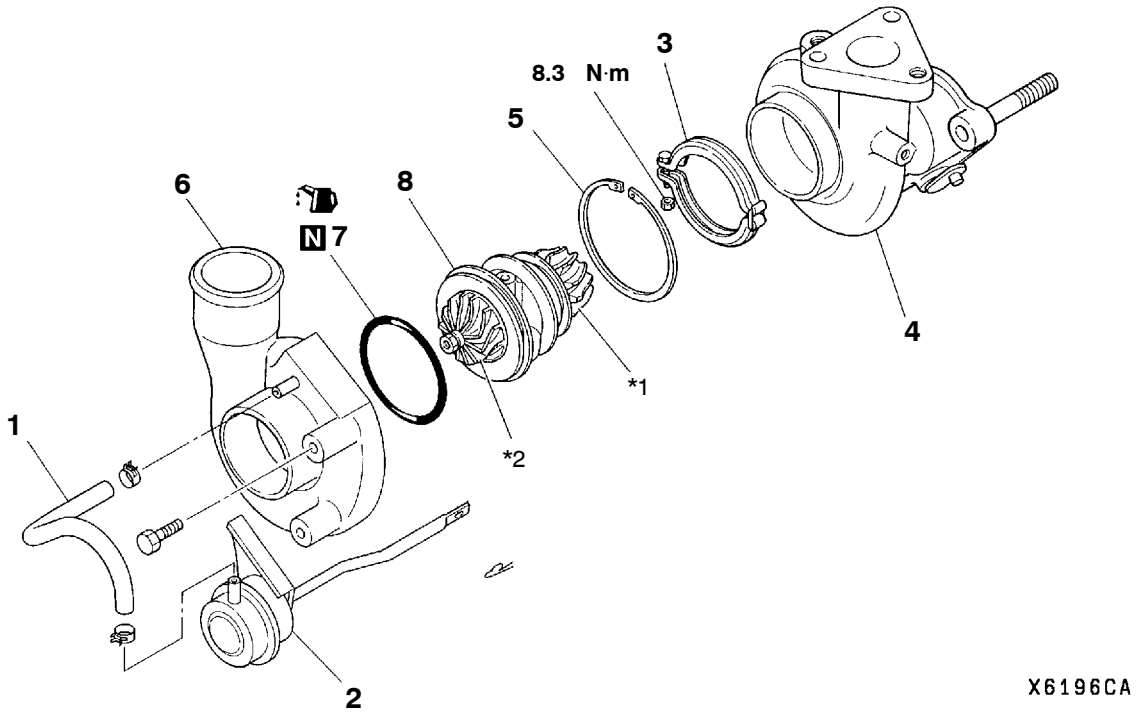


**Disassembly steps**

1. Hose
2. Actuator
3. Coupling
4. Turbine housing
5. Snap ring
6. Compressor cover
7. O-ring
8. Cartridge assembly

◀A▶ ▶B◀ ◀B▶ ▶A◀

*1: Turbine wheel
*2: Compressor wheel

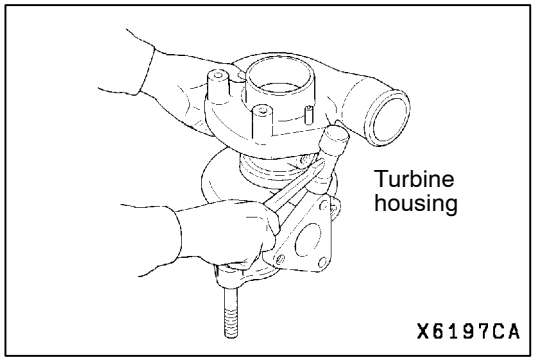


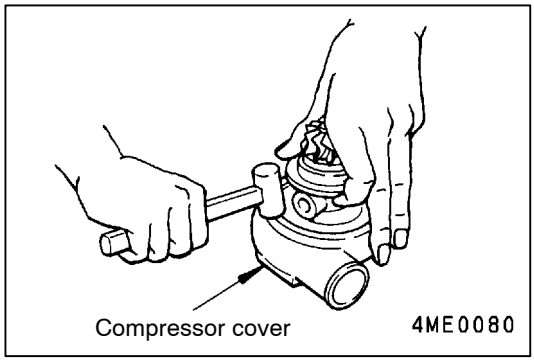


## DISASSEMBLY SERVICE POINTS

### ◀A▶ TURBINE HOUSING REMOVAL

**Caution**

1. **Tap all over the circumferential surface of the turbine housing with a rubber hammer or any other similar tool, using care not to damage it.**
2. **The turbine wheel blades are easy to bend. Use care so that they do not contact the turbine housing.**

### ◀B▶ COMPRESSOR COVER REMOVAL

**Caution**

1. **Tap all over the circumferential surface of the compressor cover with a rubber hammer or any other similar tool, using care not to damage it.**
2. **The compressor wheel blades are easy to bend. Use care so that they do not contact the compressor cover.**

Purchased from www.WorkshopManuals.co.uk

www.WorkshopManuals.co.uk

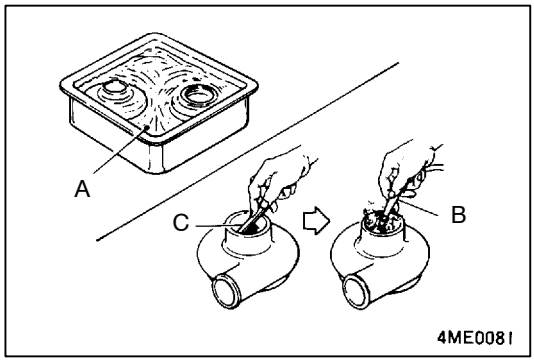


## CLEANING

### TURBINE HOUSING/COMPRESSOR COVER

1. Prior to cleaning, visually check the disassembled parts for evidences of burns, abrasions or other flaws because they may become unrecognizable after washing. Replace if necessary.
2. Immerse the disassembled parts in the nonflammable solvent A (DAI-CLEANER T-30 from Daido Chemical Industry Co., Ltd.). Remove them from the solvent and blow compressed air B against them.
   Scrape off foreign matters, if any, using a plastic scraper C before the immersion.

## REASSEMBLY SERVICE POINTS

### ▶A◀ O-RING INSTALLATION

Apply a thin coat of engine oil evenly to the entire circumferential surface of O-ring before installing it.

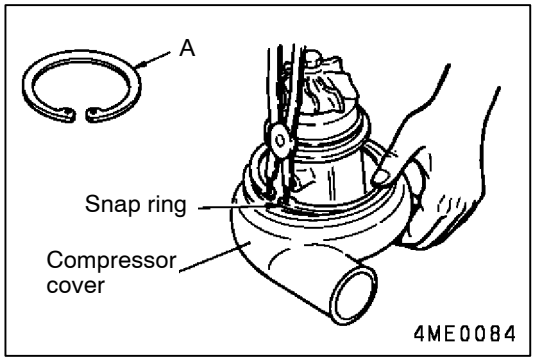


### ▶B◀ SNAP RING INSTALLATION

Install the snap ring in the compressor cover with the tapered surface A facing upward.

**Caution**
**Hold the snap ring with one hand not to let it bounce out.**

Purchased from www.WorkshopManuals.co.uk

www.WorkshopManuals.co.uk

# EXHAUST PIPE AND MAIN MUFFLER <6G7>

## REMOVAL AND INSTALLATION

**Pre-removal and Post-installation Operation**
Front Under Cover Removal and Installation

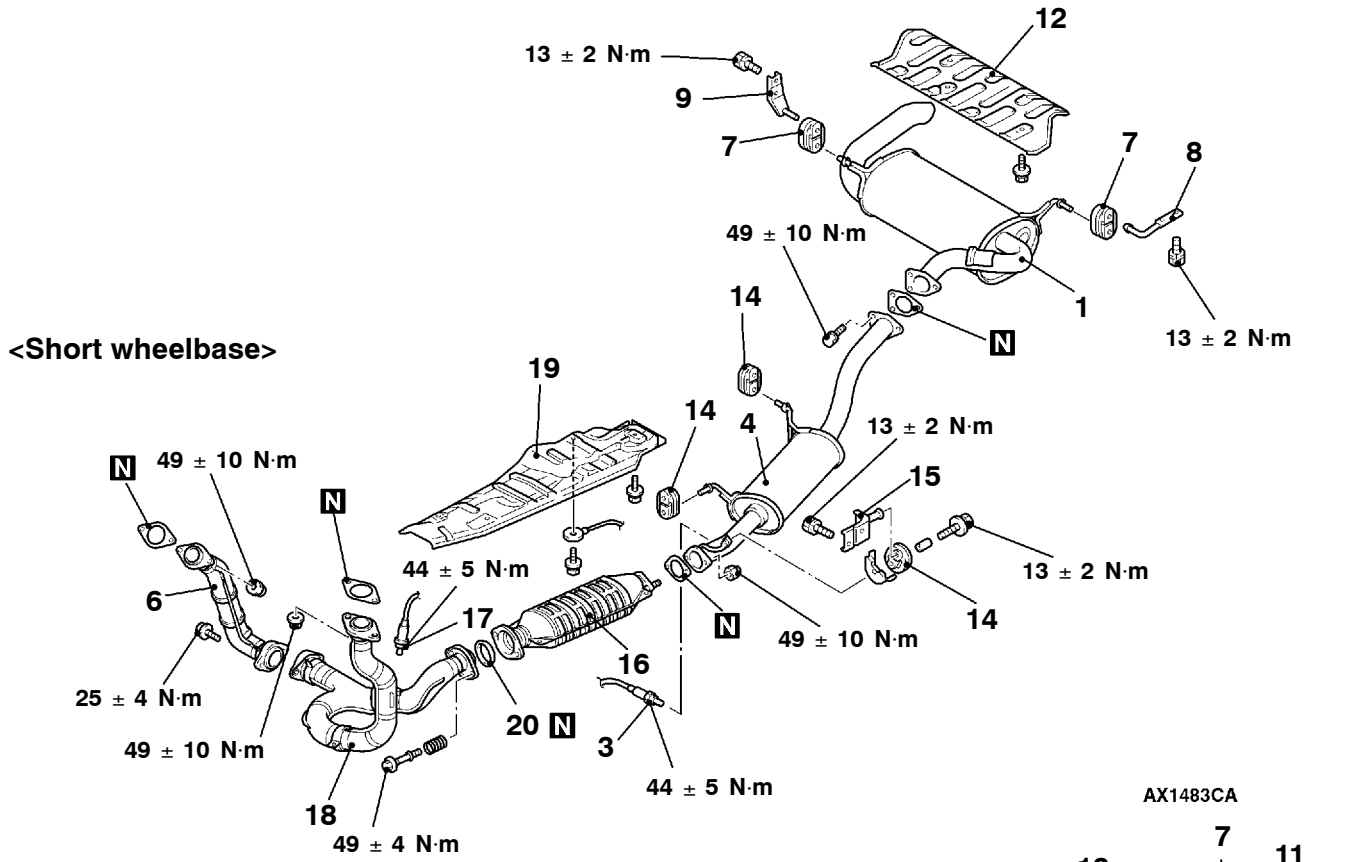


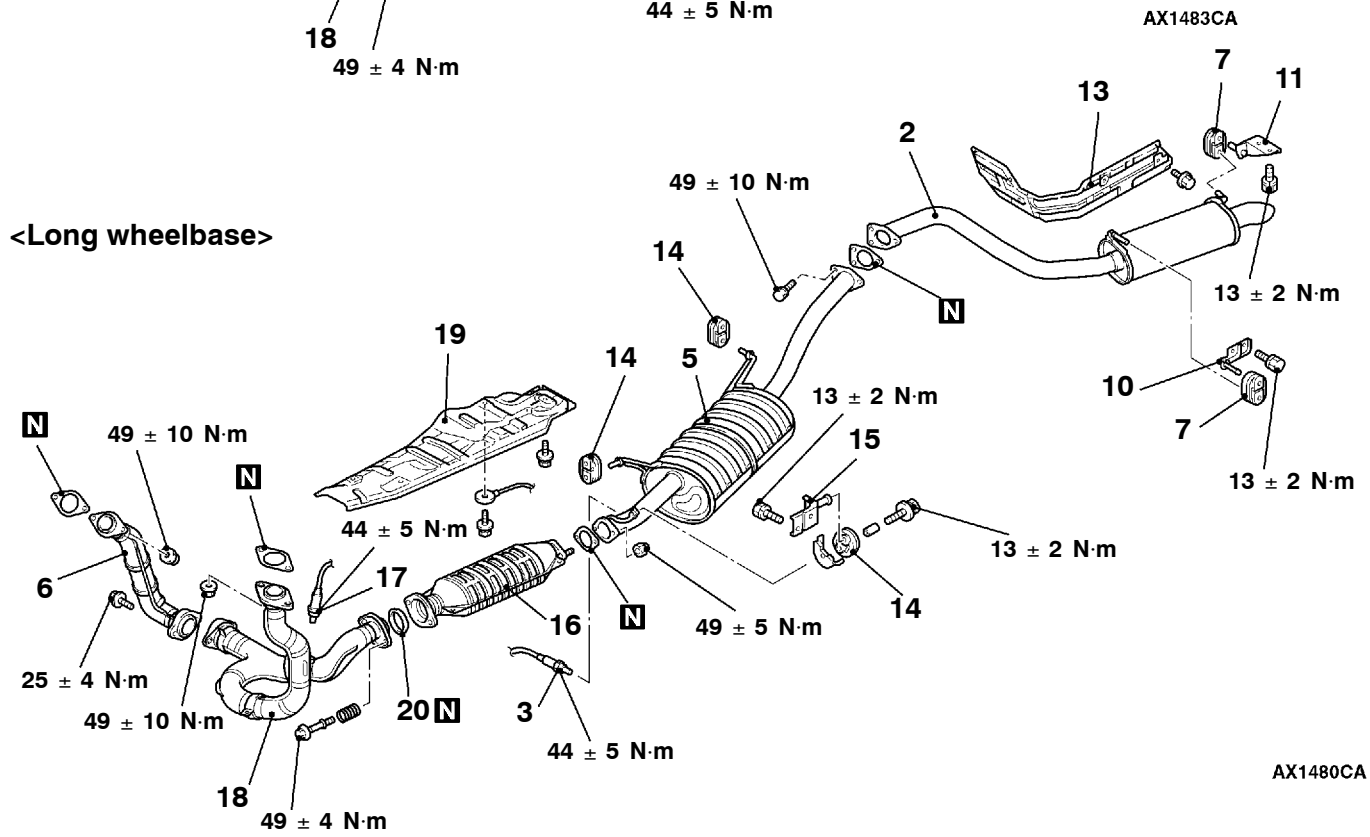


Purchased from www.WorkshopManuals.co.uk

www.WorkshopManuals.co.uk

**Exhaust main muffler and rear floor heat protector removal steps <Short wheelbase>**

1. Exhaust main muffler
7. Hanger
8. Hanger bracket
9. Hanger bracket
12. Rear floor heat protector

**Tail exhaust pipe and rear floor heat protector removal steps <Long wheelbase>**

2. Tail exhaust pipe
7. Hanger
10. Hanger bracket
11. Hanger bracket
13. Rear floor heat protector

**Center exhaust pipe removal steps <Short wheelbase>**

◀A▶ ▶A◀ 3. Oxygen sensor (rear) <M/T>
4. Center exhaust pipe
14. Hanger
15. Hanger bracket

**Exhaust main muffler removal steps <Long wheelbase>**

◀A▶ ▶A◀ 3. Oxygen sensor (rear) <M/T>
5. Exhaust main muffler
14. Hanger
15. Hanger bracket

**Front exhaust pipe removal**

- Under cover

6. Front exhaust pipe (R.H.)
◀A▶ ▶A◀ 17. Oxygen sensor (front)
18. Front exhaust pipe (L.H.)
20. Seal ring

**Front floor heat protector removal steps**

16. Catalytic converter
◀A▶ ▶A◀ 17. Oxygen sensor (front)
18. Front exhaust pipe (L.H.)
19. Front floor heat protector
20. Seal ring

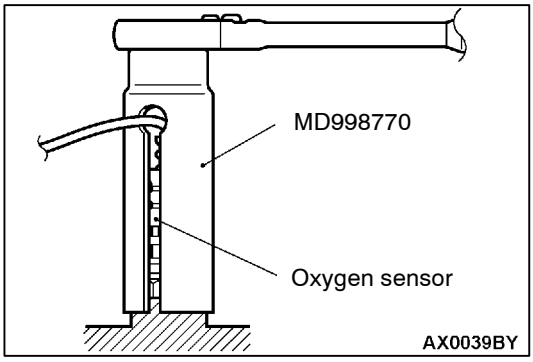


## REMOVAL SERVICE POINT

### ◀A▶ OXYGEN SENSOR REMOVAL

Use special tool to remove the oxygen sensor.

## INSTALLATION SERVICE POINT

### ▶A◀ OXYGEN SENSOR INSTALLATION

Use special tool to install the oxygen sensor.

Purchased from www.WorkshopManuals.co.uk

www.WorkshopManuals.co.uk

# EXHAUST PIPE AND MAIN MUFFLER <4D5>

## REMOVAL AND INSTALLATION

**Pre-removal and Post-installation Operation**
Front Under Cover Removal and Installation

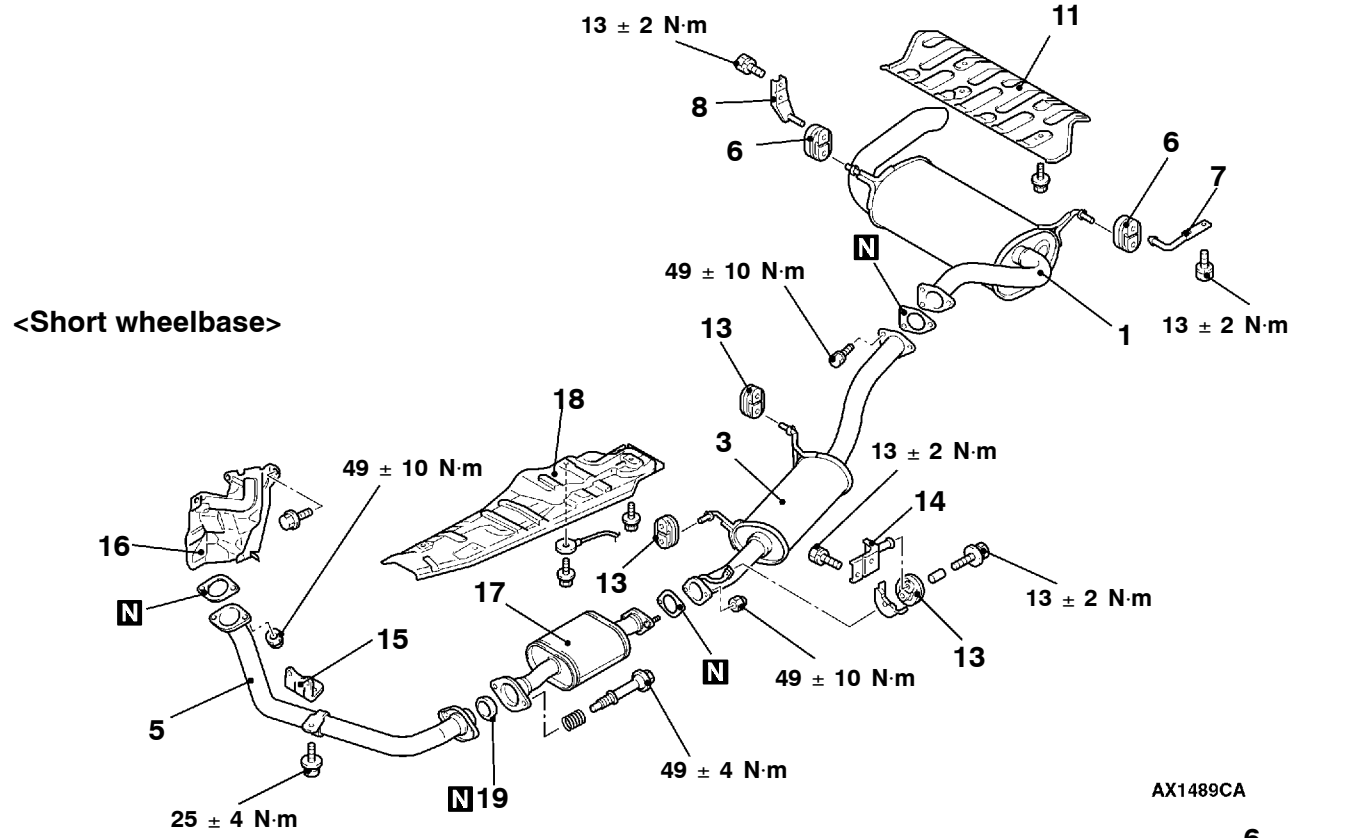


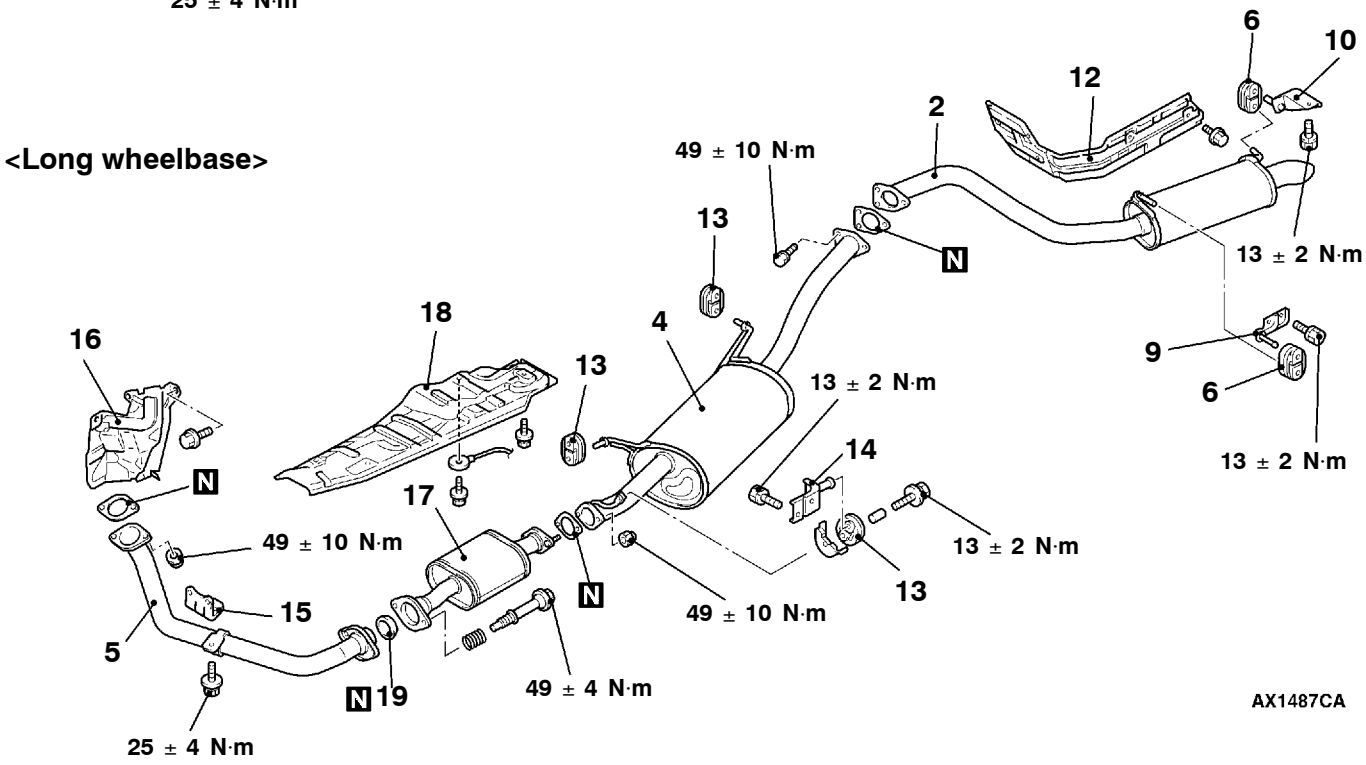


Purchased from www.WorkshopManuals.co.uk

www.WorkshopManuals.co.uk

**Exhaust main muffler and rear floor heat protector removal steps <Short wheelbase>**

1. Exhaust main muffler
6. Hanger
7. Hanger bracket
8. Hanger bracket
11. Rear floor heat protector

**Tail exhaust pipe and rear floor heat protector removal steps <Long wheelbase>**

2. Tail exhaust pipe
7. Hanger
9. Hanger bracket
10. Hanger bracket
12. Rear floor heat protector

**Center exhaust pipe removal steps <Short wheelbase>**

3. Center exhaust pipe
13. Hanger
14. Hanger bracket

**Exhaust main muffler removal steps <Long wheelbase>**

4. Exhaust main muffler
13. Hanger
14. Hanger bracket

**Front exhaust pipe and dash heat protector removal steps**

- Under cover
5. Front exhaust pipe
15. Exhaust support bracket
16. Dash heat protector

**Pre-muffler and front floor heat protector removal steps**

17. Pre-muffler
18. Front floor heat protector
19. Seal ring

Purchased from www.WorkshopManuals.co.uk

www.WorkshopManuals.co.uk

# EXHAUST PIPE AND MAIN MUFFLER <4M4>

## REMOVAL AND INSTALLATION

**Pre-removal and Post-installation Operation**
Front Under Cover Removal and Installation

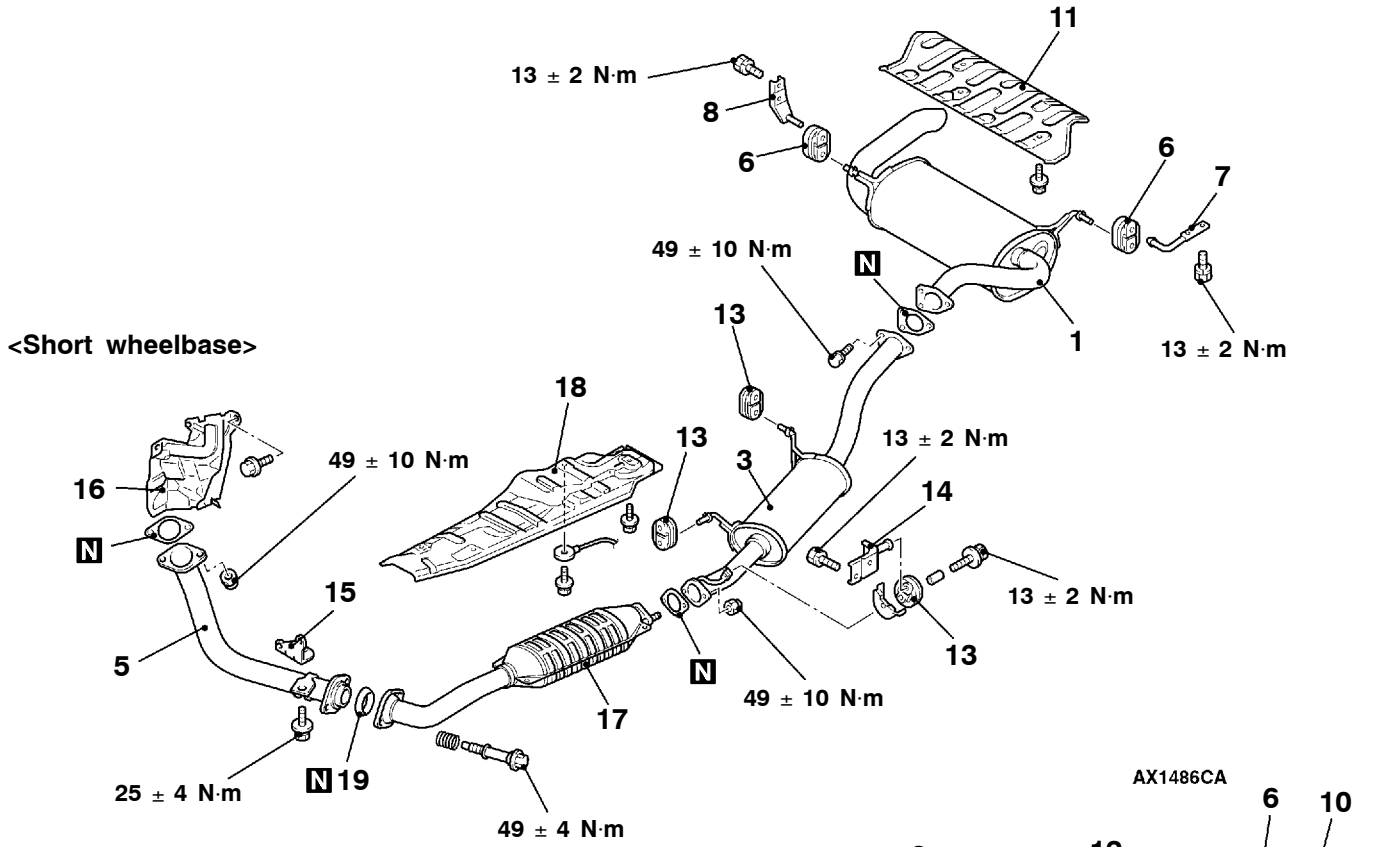


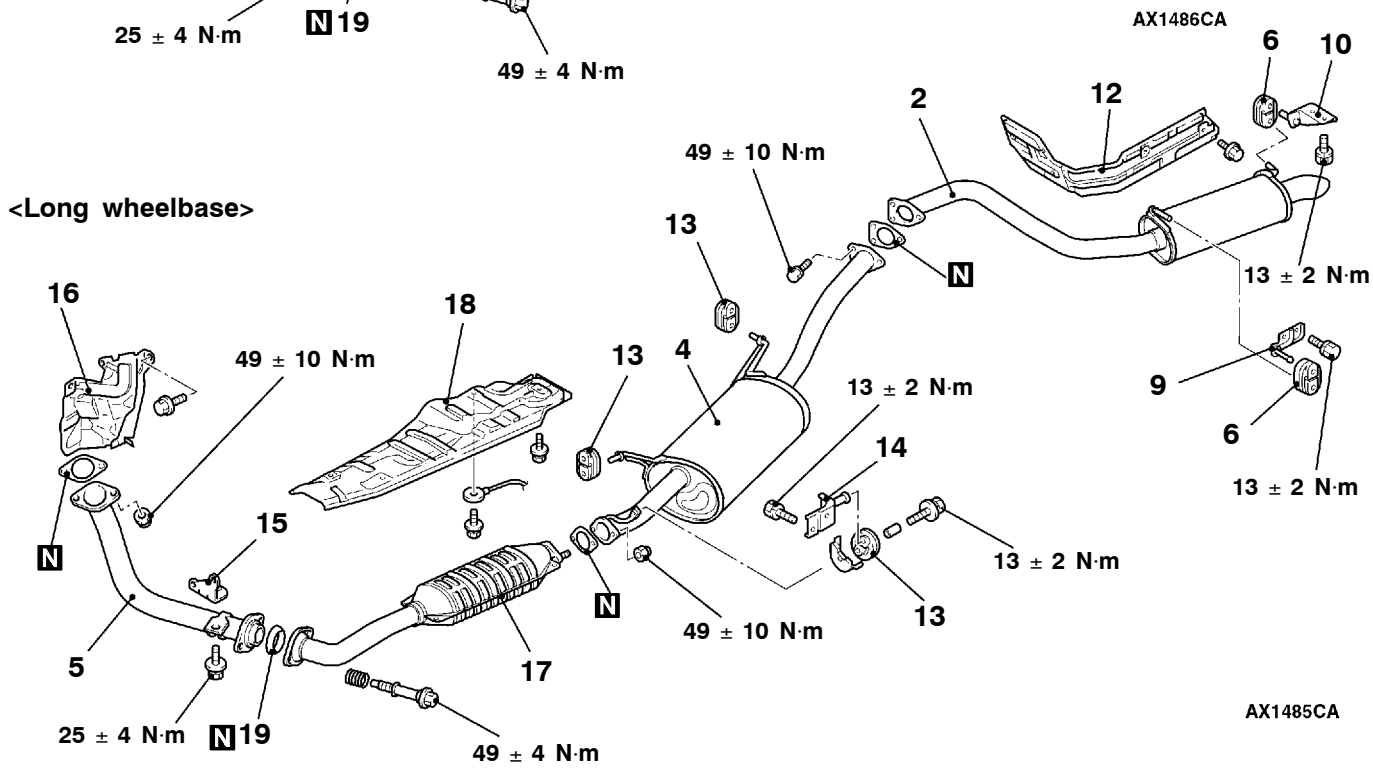


Purchased from www.WorkshopManuals.co.uk

www.WorkshopManuals.co.uk

**Exhaust main muffler and rear floor heat protector removal steps <Short wheelbase>**

1. Exhaust main muffler
6. Hanger
7. Hanger bracket
8. Hanger bracket
11. Rear floor heat protector

**Tail exhaust pipe and rear floor heat protector removal steps <Long wheelbase>**

2. Tail exhaust pipe
7. Hanger
9. Hanger bracket
10. Hanger bracket
12. Rear floor heat protector

**Center exhaust pipe removal steps <Short wheelbase>**

3. Center exhaust pipe
13. Hanger
14. Hanger bracket

**Exhaust main muffler removal steps <Long wheelbase>**

4. Exhaust main muffler
13. Hanger
14. Hanger bracket

**Front exhaust pipe and dash heat protector removal steps**

- Under cover
5. Front exhaust pipe
15. Exhaust support bracket
16. Dash heat protector

**Front floor heat protector removal steps**

17. Catalytic converter
18. Front floor heat protector
19. Seal ring

Purchased from www.WorkshopManuals.co.uk

www.WorkshopManuals.co.uk


# INTAKE AND EXHAUST

## CONTENTS

**GENERAL** . . . . . 2
Outline of Changes . . . . . 2
**GENERAL INFORMATION** . . . . . 2
**SERVICE SPECIFICATIONS** . . . . . 3
**SEALANT** . . . . . 3
**ON-VEHICLE SERVICE** . . . . . 4
Turbocharger Supercharging Check . . . . . 4
Supercharging Pressure Control System Check . . . . . 5
Variable Geometry Actuator Check . . . . . 6
Variable Geometry Solenoid Valve Check . . . . . 6
**INTAKE MANIFOLD AND THROTTLE BODY <4M4>** . . . . . 7
**INTAKE MANIFOLD AND EXHAUST MANIFOLD, THROTTLE BODY AND TURBOCHARGER <4D5>** . . . . . 10
**TURBOCHARGER AND EXHAUST MANIFOLD <4M4>** . . . . . 12
**EXHAUST PIPE AND MAIN MUFFLER <4D5>** . . . . . 14

Purchased from www.WorkshopManuals.co.uk

www.WorkshopManuals.co.uk

# GENERAL

## OUTLINE OF CHANGES

Some service procedures have been established as the following changes have been made due to the compliance with the Emission Regulation Step III.

- An oxygen sensor (rear) has been added. Its service procedure is the same as for the previous MT models <6G7-A/T>.
- The turbocharger has been changed to a Variable Geometry (VG) type <4D5>.
- A catalytic converter has been added <4D5>.
- The intake manifold has been reshaped <4M4>.
- An EGR cooler has been added <4M4>.
- The variable geometry turbocharger can not be disassembled, and must be always replaced as an assembly.

## GENERAL INFORMATION

The variable geometry solenoid valve is duty controlled to control the variable nozzle opening angle of the variable geometry turbocharger. This allows to obtain the characteristic of boost pressure corresponding to the engine operation status.

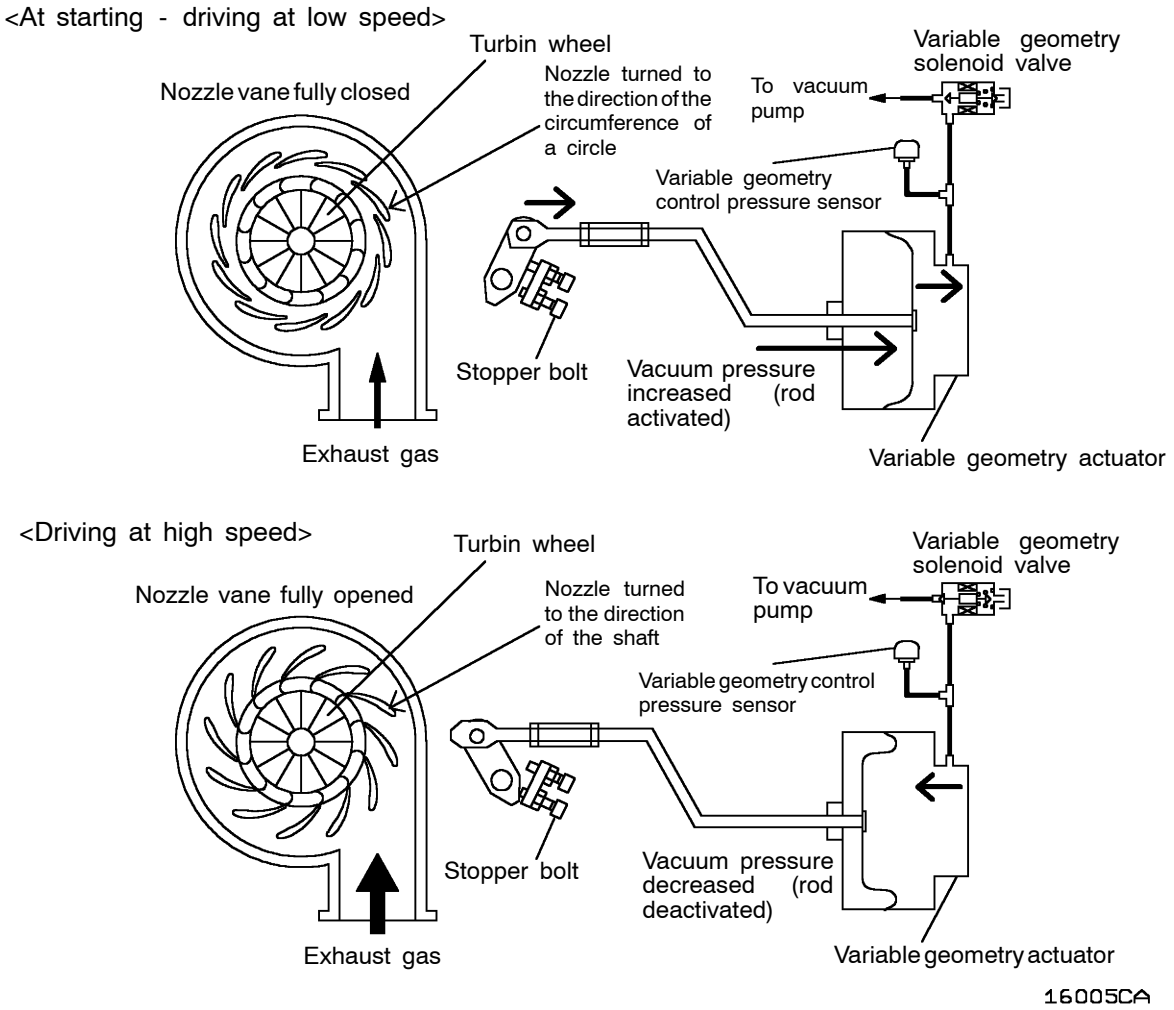


Purchased from www.WorkshopManuals.co.uk

www.WorkshopManuals.co.uk

At starting and driving at low speed, the duty control value of the variable geometry solenoid valve is increased to apply the vacuum pressure of the vacuum pump to the variable geometry actuator. Applying the vacuum pressure to the variable geometry actuator pulls the actuator rod so that it can move towards the direction of closing the variable nozzle of the variable geometry turbocharger. As closing the nozzle reduces the exhaust gas mass, the speed of exhaust gas flow will be increased and efficiency will be improved. Since the characteristic of boost pressure becomes a low speed type, boost pressure will suddenly rise from low speed.
At driving at high speed, the duty control value of the variable geometry solenoid valve is decreased to reduce the vacuum pressure from the vacuum pump so that the actuator rod can return to the deactivated status and move towards the direction of opening the nozzle of the variable geometry turbocharger.
Opening the nozzle allows the characteristic of boost pressure to become a high speed type so that the appropriate boost pressure can be maintained.
Therefore, boost pressure can be controlled by appropriate duty control of the variable geometry solenoid valve. The engine-ECU calculates the correct boost pressure based on the engine speed and fuel injection amount. Furthermore, the duty control of the variable geometry solenoid valve is given feedback of the signals from the variable geometry control pressure sensor and the boost pressure sensor so that the variable nozzle opening angle of the variable geometry turbocharger can be quickly adjusted to obtain the desired boost pressure.

## SERVICE SPECIFICATIONS

| Items | Standard value |
|---|---|
| Variable geometry actuator activation vacuum (Approximately 1 mm stroke) kPa | Approximately 10.5 - 12.5 |
| Variable geometry solenoid valve coil resistance (at 20°C) Ω | 29 - 35 |

## SEALANT

| Item | Specified sealant | Remarks |
|---|---|---|
| Thread of the intake manifold mounting bolts | 3M Stud Locking No.4170 or equivalent | Anaerobic sealant |

Purchased from www.WorkshopManuals.co.uk

www.WorkshopManuals.co.uk

# ON-VEHICLE SERVICE

## TURBOCHARGER SUPERCHARGING CHECK

**Caution**
**Conduct the driving test in a location where driving at full acceleration can be done with safety. Two person should be in the vehicle when the test is conducted; the person in the passenger seat should read the indications shown by the MUT-II.**

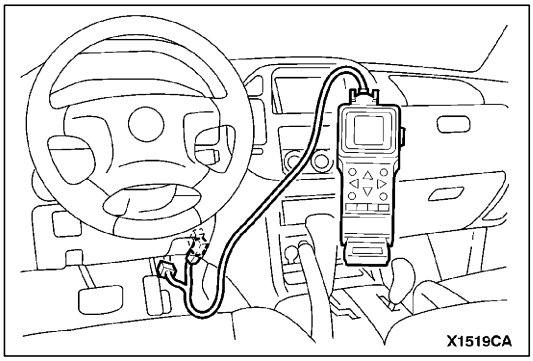


1. Set the vehicle to the pre-inspection condition.
2. Turn the ignition switch to “LOCK” (OFF) position, and connect the diagnosis connector to the MUT-II.
3. Use the data list function named “Item No. 04” boost pressure sensor of the MUT-II to check the supercharging pressure when the engine speed increases to approximately 3,000 r/min or more by driving at full acceleration in 2nd.
4. When the indicated supercharger does not become positive pressure, check the following items.
   - Malfunction of the boost pressure sensor
   - Leakage of supercharging pressure
   - Malfunction of the turbocharger
5. When the indicated supercharger is 133 kPa or more, supercharging control may be faulty, therefore check the followings.
   - Malfunction of the variable geometry actuator
   - Malfunction of the variable nozzle
   - Malfunction of the variable geometry solenoid valve
   - Malfunction of the boost pressure sensor
   - Malfunction of the variable geometry control pressure sensor

Purchased from www.WorkshopManuals.co.uk

www.WorkshopManuals.co.uk

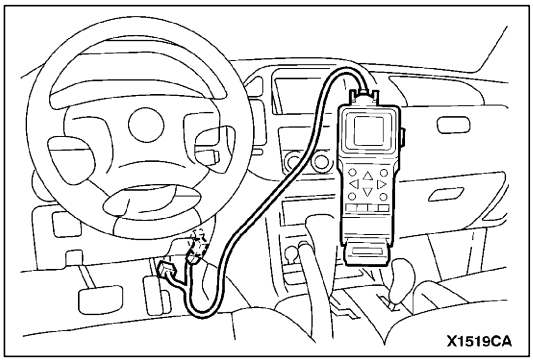


## SUPERCHARGING PRESSURE CONTROL SYSTEM CHECK

1. Set the vehicle to the pre-inspection condition.
2. Turn the ignition switch to “LOCK” (OFF) position, and connect the diagnosis connector to the MUT-II.
3. Start the engine, and let it run at idle.
4. Select the actuator testing function named “Item No. 35 or No. 36” of the MUT-II to check that the variable geometry actuator vacuum and the supercharging pressure increase when the variable geometry solenoid valve is activated.

| Variable geometry solenoid valve condition | Variable geometry actuator vacuum | Supercharging pressure |
|---|---|---|
| OFF | 0 kPa | Approximately -1 kPa |
| ON | Approximately 80 kPa | Approximately 3 kPa |

NOTE
(1) If the variable geometry actuator vacuum is not in a normal condition, the variable geometry actuator, variable geometry solenoid valve, variable geometry control pressure sensor, vacuum pump or hose may be faulty.
(2) If the variable geometry actuator vacuum is in a normal condition but the supercharging pressure is not in a normal condition, the variable geometry turbocharger nozzle, boost pressure sensor, or hose may be faulty.

**Caution**
**Be careful not to forcibly activate the variable geometry solenoid valve to the fullest degree when running at a high speed. Too much supercharging pressure could damage the engine or the turbocharger.**

Purchased from www.WorkshopManuals.co.uk

www.WorkshopManuals.co.uk

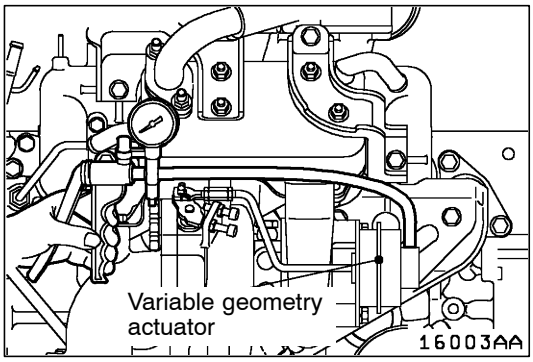


## VARIABLE GEOMETRY ACTUATOR CHECK

1. Connect the hand vacuum pump to nipple.
2. While gradually applying vacuum, check the vacuum that begins to active (approximately 1 mm stroke) the variable geometry actuator rod.

**Standard value: Approximately 10.5 - 12.5 kPa**

**Caution**
**In order to avoid damage to the diaphragm, do not apply a vacuum of 59 kPa or higher.**

3. If there is a significant deviation from the standard value, check the actuator or the variable nozzle: replace if necessary.

## VARIABLE GEOMETRY SOLENOID VALVE CHECK

NOTE
When disconnecting the vacuum hose, always make a mark so that it can be reconnected at original position.

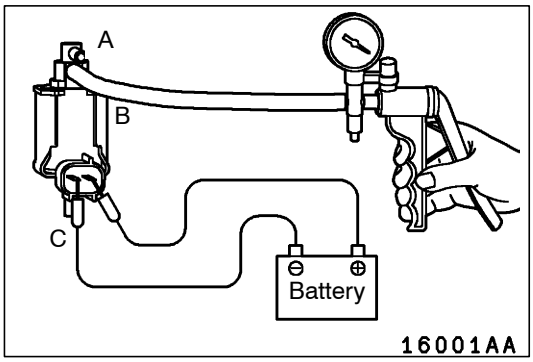


1. Disconnect the vacuum hose (black, red stripe) from the solenoid valve.
2. Disconnect the harness connector.
3. Connect a hand vacuum pump to the nipple to which the red striped vacuum hose was connected.
4. Check airtightness by applying a vacuum with voltage applied directly from the battery to the variable geometry solenoid valve and without applying voltage.

| Battery voltage | Nipple condition | Normal condition |
|---|---|---|
| Applied | Both nipples are opened. | Vacuum leaks. |
| | Nipple A is closed. | Vacuum is maintained. |
| Not applied | Both nipples are opened. | Vacuum leaks. |
| | Nipple C is closed. | Vacuum is maintained. |

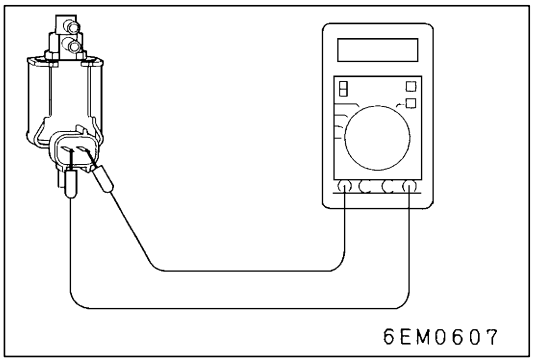


5. Measure the resistance between the terminals of the solenoid valve.

**Standard value: 29 - 35 Ω (at 20°C)**

Purchased from www.WorkshopManuals.co.uk

www.WorkshopManuals.co.uk

# INTAKE MANIFOLD AND THROTTLE BODY <4M4>

## REMOVAL AND INSTALLATION

**Pre-removal and Post-installation Operations**
- Engine Cover Removal and Installation.
- Skid Plate and Under Cover Removal and Installation.
- Battery, Battery Tray Removal and Installation.
- Fuel Filter Removal and Installation.
- EGR Valve and EGR Pipe A Removal and Installation (Refer to GROUP 17.)

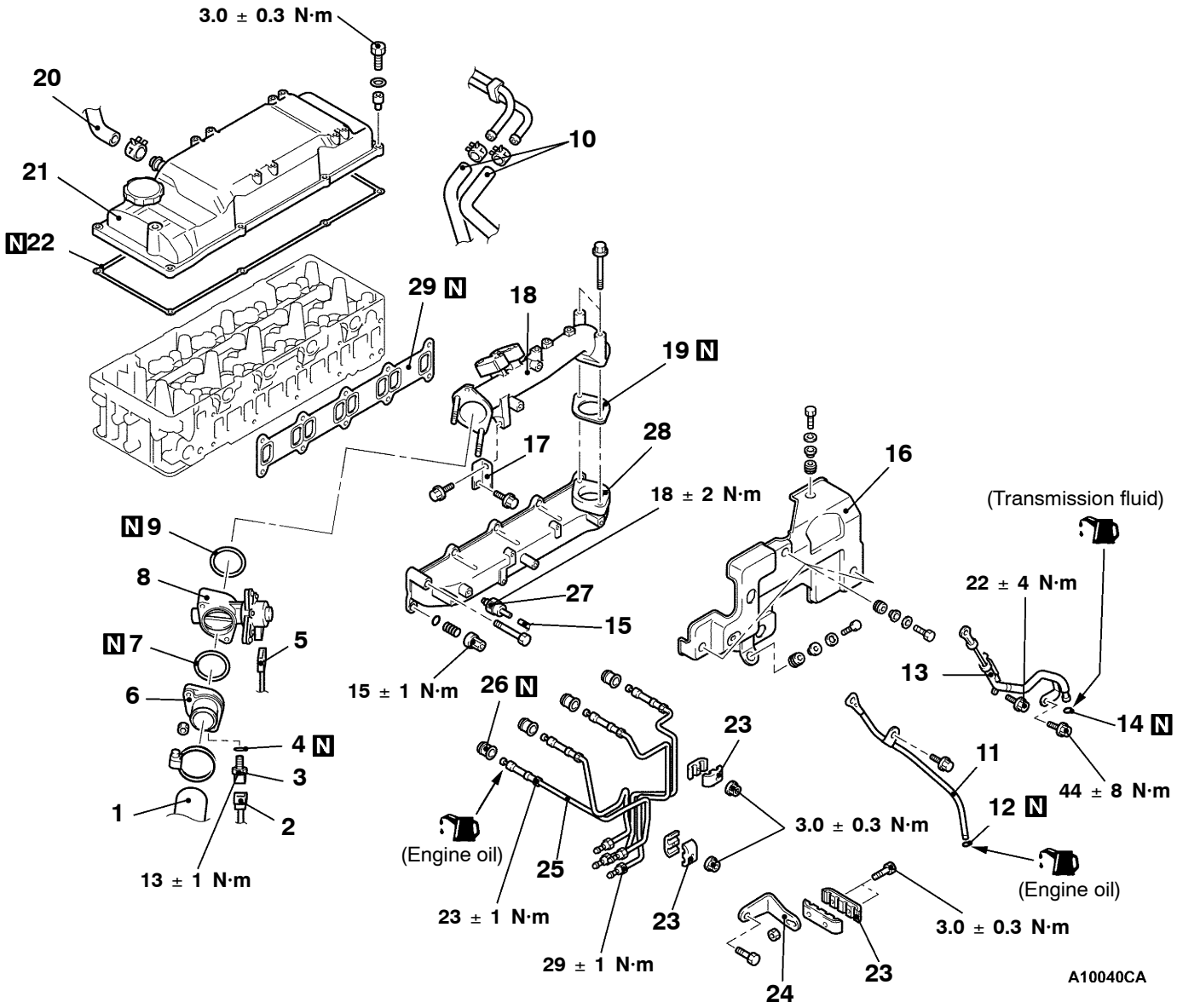


Purchased from www.WorkshopManuals.co.uk

www.WorkshopManuals.co.uk

**Removal steps**

1. Intercooler air hose connection
2. Boost air temperature sensor connector
3. Boost air temperature sensor
4. Gasket
5. Throttle motor connector
6. Intake air fitting
7. O-ring
8. Throttle body assembly
9. O-ring
10. Fuel hose connection
11. Engine oil level gauge and guide
12. O-ring
13. ATF level gauge and guide
14. O-ring
15. Vacuum hose connection
16. Intake manifold cover
17. Air intake pipe stay
18. Air intake pipe
19. Air intake pipe gasket
20. Breather hose connection
21. Rocker cover
22. Rocker cover gasket
23. Clamp
24. Injection pipe stay
25. ◀A▶ ▶B◀ Injection pipe
26. ▶B◀ Injection pipe seal
27. Gas filter assembly
28. ▶A◀ Intake manifold
29. Intake manifold gasket

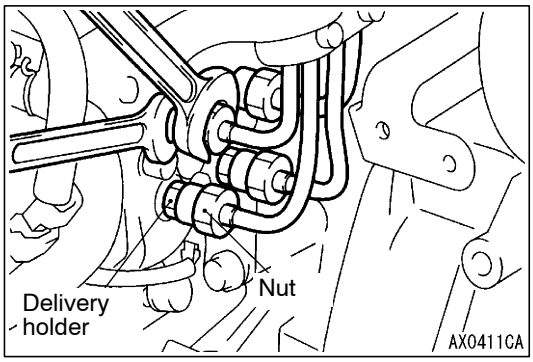


## REMOVAL SERVICE POINT

### ◀A▶ INJECTION PIPE REMOVAL

Hold the injection pump side delivery holder with a open-end wrench, and loosen the nut.

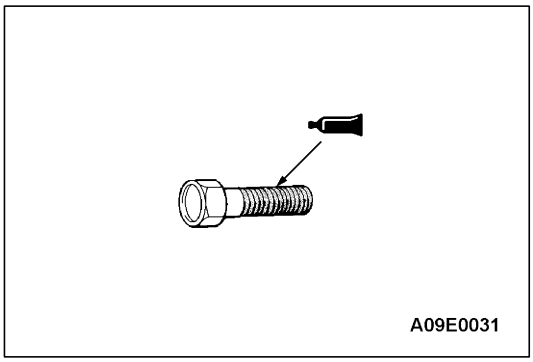


## INSTALLATION SERVICE POINTS

### ▶A◀ INTAKE MANIFOLD INSTALLATION

1. Remove the old sealant from the intake manifold mounting bolt thread.
2. Use a tap (M8×1.25) to remove the old sealant from the bolt hole, and clean by using compressed air.
3. Apply the specified sealant to the intake manifold mounting bolt thread, and install the intake manifold by using the mounting bolts.

   **Specified sealant:**
   **3M Stud Locking No. 4170 or equivalent**

Purchased from www.WorkshopManuals.co.uk

www.WorkshopManuals.co.uk

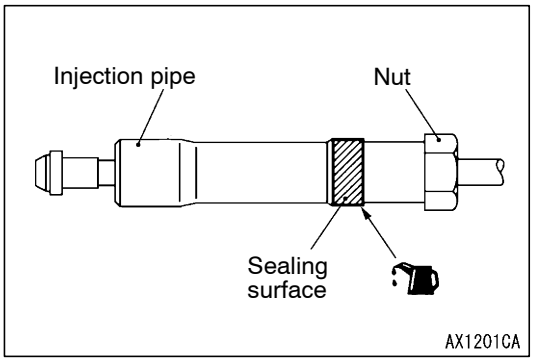


**▶B◀ INJECTION PIPE SEAL/INJECTION PIPE INSTALLATION**

1. Apply a small amount of engine oil to a new injection pipe seal, and install it, being careful not to damage it.
2. Apply a small amount of engine oil to the injection pipe sealing surface, and then connect the injection pipes.
3. Use a spanner to hold the delivery holder at the injection pump side in the same manner as removal,and then install the injection pipe nuts.
4. Tighten the injection pipe nut to the specified torque.
   **Tightening torque: 23 ± 1 N·m**

Purchased from www.WorkshopManuals.co.uk

www.WorkshopManuals.co.uk

# INTAKE AND EXHAUST MANIFOLD, THROTTLE BODY AND TURBOCHARGER <4D5>

## REMOVAL AND INSTALLATION

**Pre-removal and Post-installation Operations**
- Engine Coolant Draining and Refilling.
- Skid Plate and Under Cover Removal and Installation.
- Battery, Battery Tray Removal and Installation.
- Air Cleaner Assembly Removal and Installation.
- Front Exhaust Pipe Removal and Installation (Refer to P.15-10.)
- EGR valve and EGR cooler Removal and Installation (Refer to GROUP 17.)

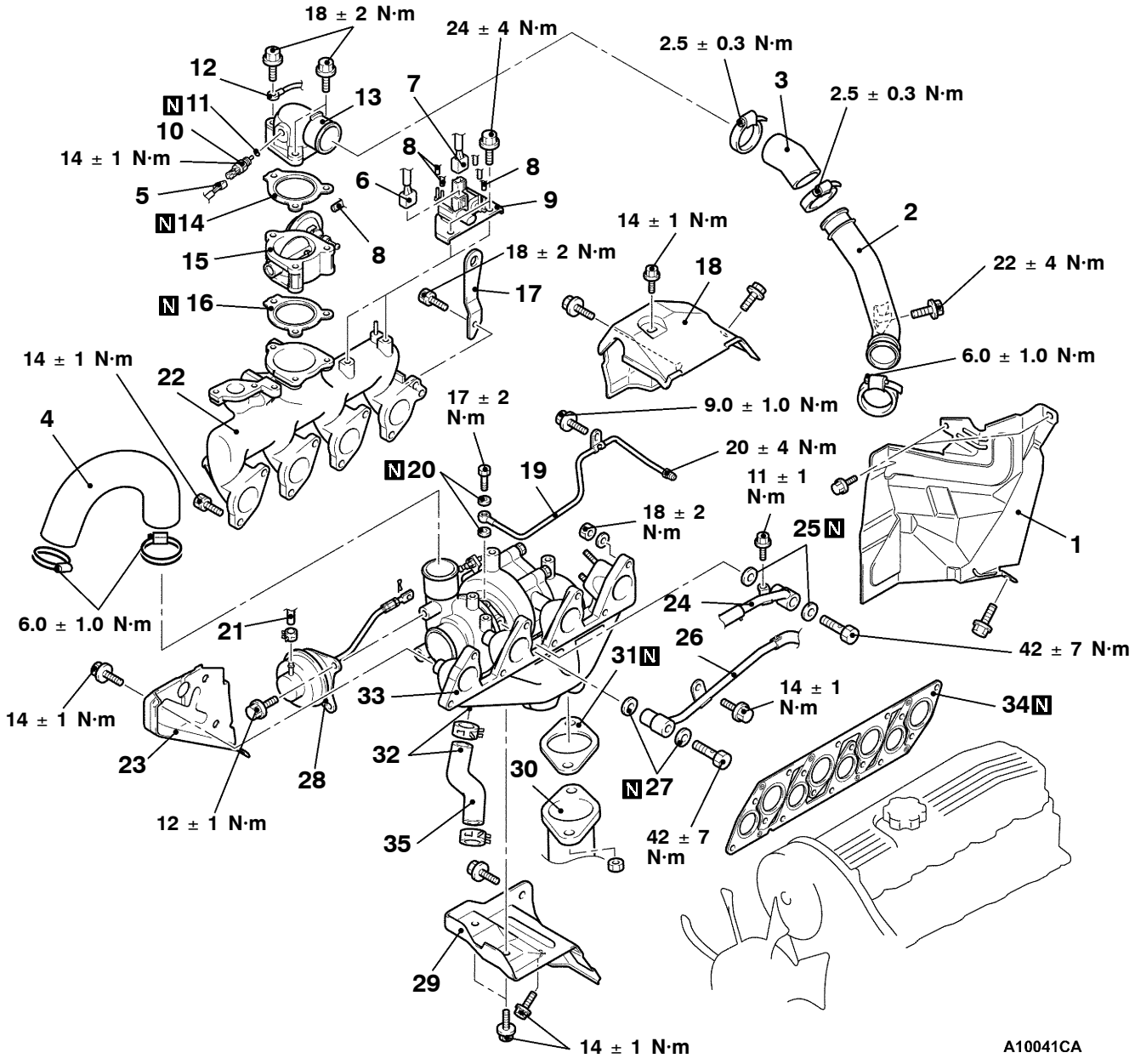


Purchased from www.WorkshopManuals.co.uk

www.WorkshopManuals.co.uk

**Removal steps**

1. Dash panel heat protector
2. Air pipe
3. Air intake hose
4. Intercooler air hose
5. Air temperature sensor connector
6. Throttle solenoid valve connector
7. VGT solenoid valve connector
8. Vacuum hose connection
9. Solenoid valve assembly
10. Air temperature sensor
11. Gasket
12. Earth cable connection
13. Air intake fitting
14. Gasket
15. Throttle body assembly
16. Gasket
17. Engine hanger
18. Turbocharger upper heat protector
19. Oil pipe assembly
20. Gasket
21. Vacuum hose connection
22. Intake manifold
23. Exhaust manifold heat protector
24. Water pipe A and water hose assembly
25. Gasket
26. Water pipe B connection
27. Gasket
28. VG actuator
29. Exhaust fitting heat protector
30. Front exhaust pipe connection
31. Gasket
32. Oil return hose connection
33. Exhaust manifold and turbocharger assembly
34. Intake and exhaust manifold gasket
35. Oil return hose

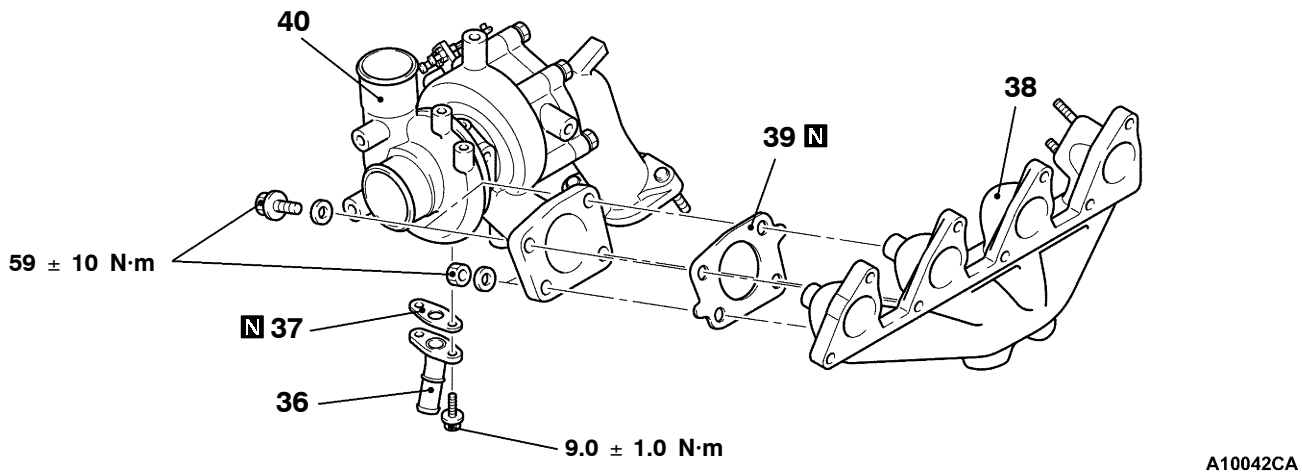


36. Oil return pipe
37. Oil return pipe gasket
38. Exhaust manifold
39. Turbocharger gasket
▶A◀ 40. Turbocharger assembly

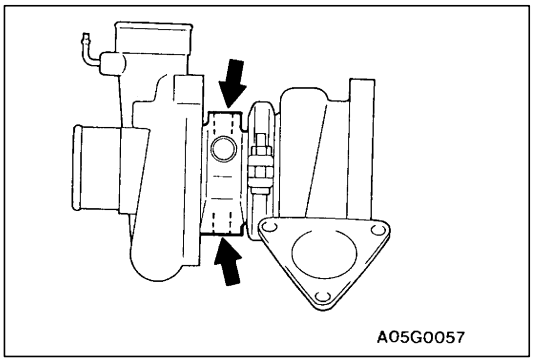


## INSTALLATION SERVICE POINT

### ▶A◀ TURBOCHARGER ASSEMBLY INSTALLATION

1. Clean the alignment surfaces shown in the illustration.
2. Supply clean engine oil from the oil pipe mounting hole of the turbocharger assembly.

**Caution**
**When cleaning, take care that no foreign material gets into the engine coolant or oil passages hole.**

Purchased from www.WorkshopManuals.co.uk

www.WorkshopManuals.co.uk

# TURBOCHARGER AND EXHAUST MANIFOLD <4M4>

## REMOVAL AND INSTALLATION

**Pre-removal and Post-installation Operations**
- Engine Coolant Draining and Refilling.
- Skid Plate and Under Cover Removal and Installation
- Engine Cover Removal and Installation.
- Air cleaner Assembly Removal and Installation.
- Battery, Battery Tray Removal and Installation.
- EGR valve and EGR cooler Removal and Installation (Refer to GROUP 17.)
- Front Exhaust Pipe Removal and Installation.

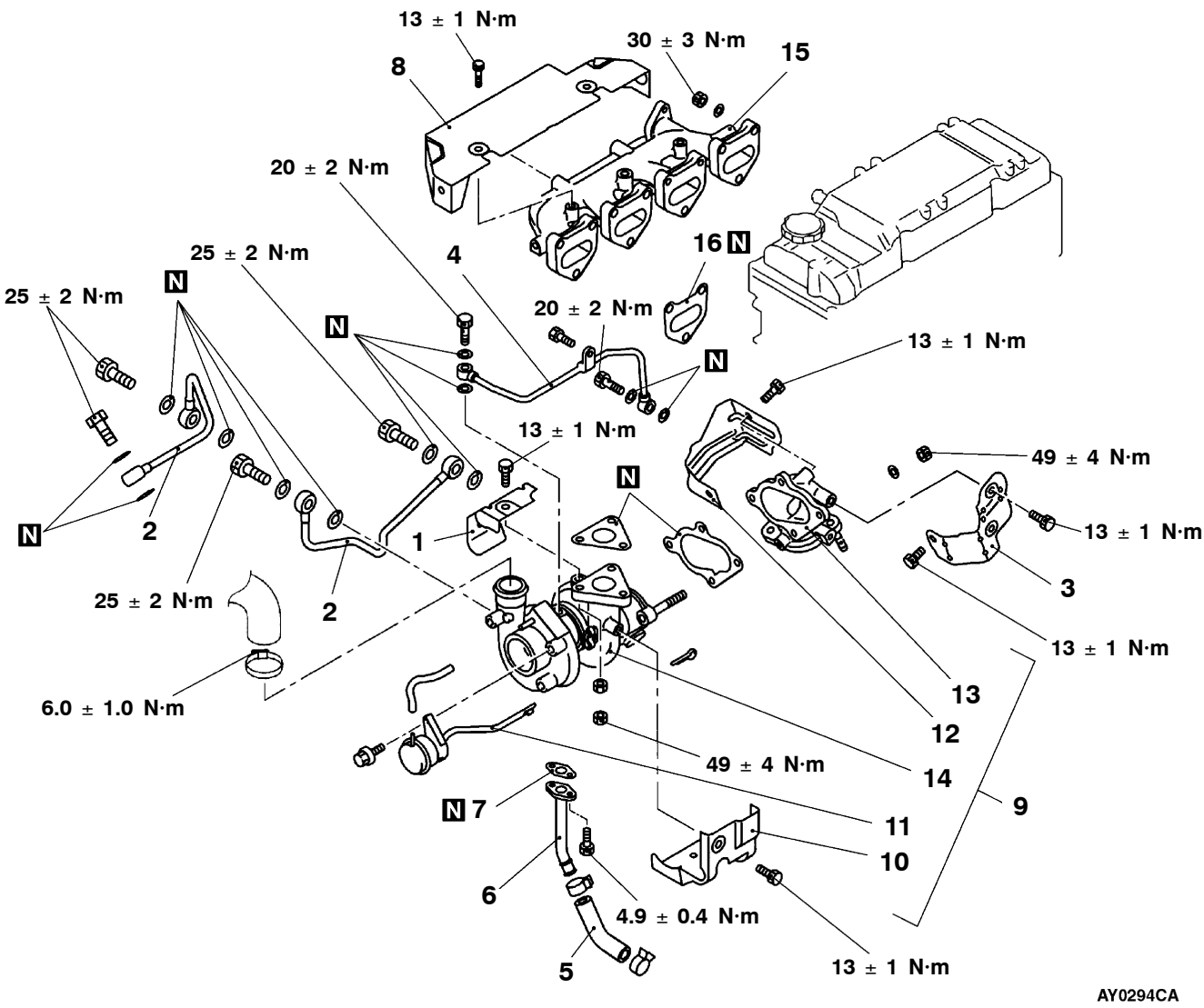


**Removal steps**

1. Turbocharger cover
2. Water pipe
3. Turbocharger cover
4. Oil pipe
5. Oil return hose
6. Oil return pipe
7. Oil return pipe gasket
8. Heat protector
9. Turbocharger and exhaust fitting assembly
10. Turbocharger cover
11. Waste gate actuator
12. Turbocharger cover
13. Exhaust fitting

▶A◀ 14. Turbocharger assembly

15. Exhaust manifold
16. Exhaust manifold gasket

Purchased from www.WorkshopManuals.co.uk

www.WorkshopManuals.co.uk

## INSTALLATION SERVICE POINT

### ▶A◀ TURBOCHARGER ASSEMBLY INSTALLATION

1. Check the internal surface, the eye bolt and the mating surface of the oil pipe and water pipe for clogging, and clean if necessary.
2. If deposits of carbon are accumulated on the turbocharger oil passage, remove them and clean using the compressed air.

   **Caution**
   **Be careful not to allow foreign material to enter the turbocharger.**

3. Add clean engine oil through the oil feed pipe port on the turbocharger.

Purchased from www.WorkshopManuals.co.uk

www.WorkshopManuals.co.uk

# EXHAUST PIPE AND MAIN MUFFLER <4D5>

## REMOVAL AND INSTALLATION

**Pre-removal and Post-installation Operation**
Front Under Cover Removal and Installation

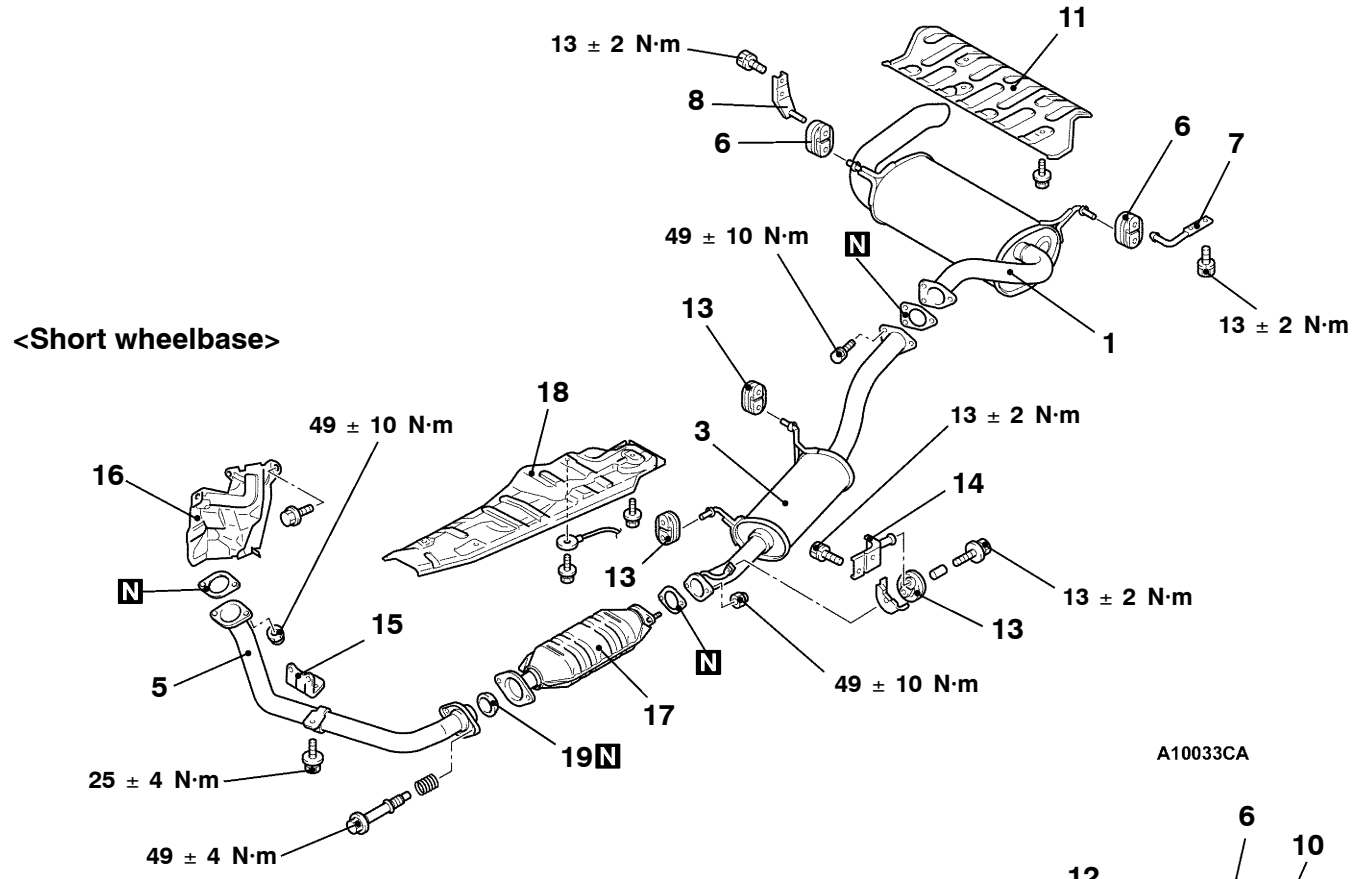


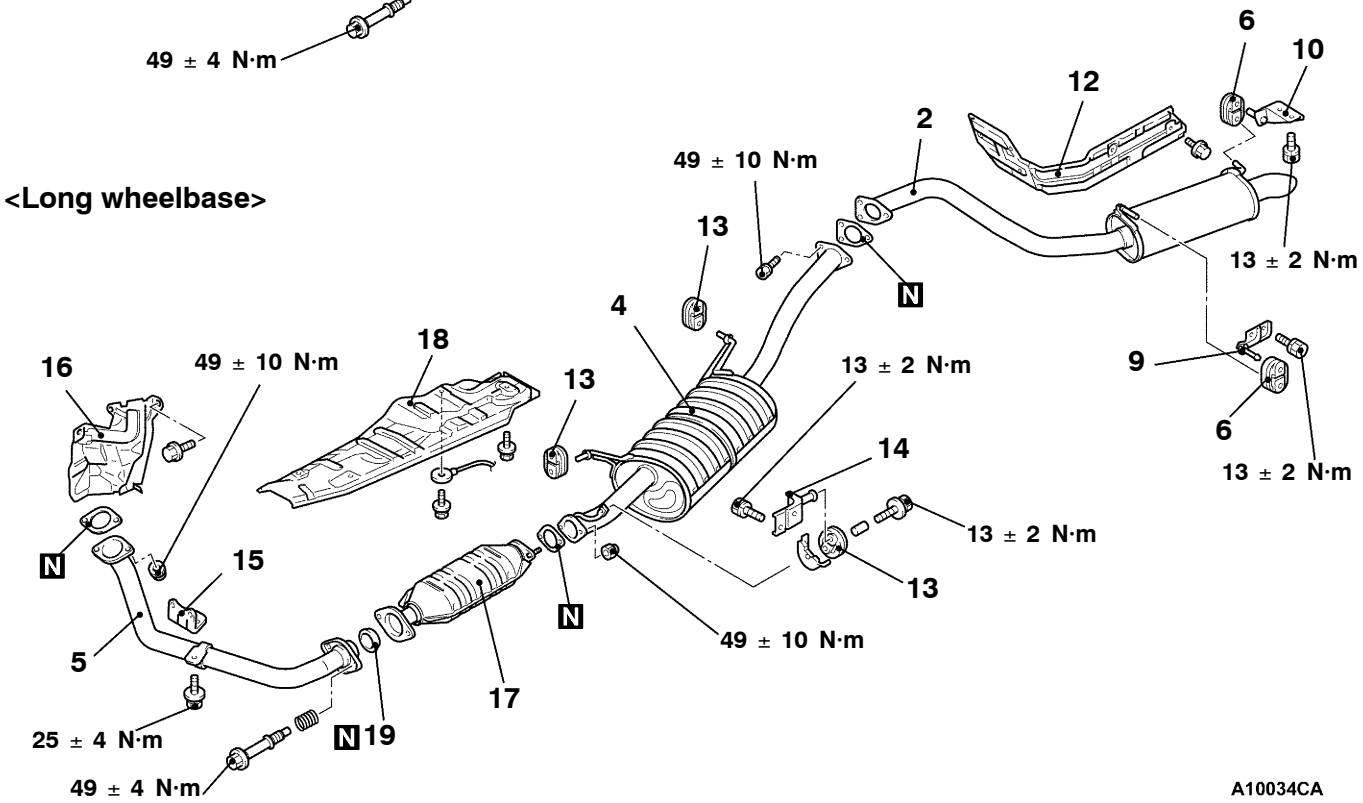


Purchased from www.WorkshopManuals.co.uk

www.WorkshopManuals.co.uk

**Exhaust main muffler and rear floor heat protector removal steps <Short wheelbase>**

1. Exhaust main muffler
6. Hanger
7. Hanger bracket
8. Hanger bracket
11. Rear floor heat protector

**Tail exhaust pipe and rear floor heat protector removal steps <Long wheelbase>**

2. Tail exhaust pipe
6. Hanger
9. Hanger bracket
10. Hanger bracket
12. Rear floor heat protector

**Center exhaust pipe removal steps <Short wheelbase>**

3. Center exhaust pipe
13. Hanger
14. Hanger bracket

**Exhaust main muffler removal steps <Long wheelbase>**

4. Exhaust main muffler
13. Hanger
14. Hanger bracket

**Front exhaust pipe and dash heat protector removal steps**

- Under cover
5. Front exhaust pipe
15. Exhaust support bracket
16. Dash heat protector

**Front floor heat protector removal steps**

17. Catalytic converter
18. Front floor heat protector
19. Seal ring

Purchased from www.WorkshopManuals.co.uk

www.WorkshopManuals.co.uk

# ENGINE ELECTRICAL

**Click on the applicable bookmark to selected the required model year.**

Purchased from www.WorkshopManuals.co.uk

www.WorkshopManuals.co.uk


# ENGINE ELECTRICAL

## CONTENTS


CHARGING SYSTEM . . . . . 2
- GENERAL INFORMATION . . . . . 2
- SERVICE SPECIFICATIONS . . . . . 3
- SPECIAL TOOL . . . . . 4
- ON-VEHICLE SERVICE . . . . . 5
  - Alternator Output Line Voltage Drop Test . . . . 5
  - Output Current Test . . . . . 6
  - Regulated Voltage Test . . . . . 8
  - Waveform Check Using An Analyzer . . . . . 11
- ALTERNATOR . . . . . 13

STARTING SYSTEM . . . . . 23
- GENERAL INFORMATION . . . . . 23
- SERVICE SPECIFICATIONS . . . . . 24
- STARTER MOTOR . . . . . 24

IGNITION SYSTEM . . . . . 37
- GENERAL INFORMATION . . . . . 37
- SERVICE SPECIFICATIONS . . . . . 38
- SPECIAL TOOL . . . . . 38
- ON-VEHICLE SERVICE . . . . . 38
  - Ignition Coil (With Built-in Power Transistor) Check . . . . . 38
  - Spark Plug Check and Cleaning . . . . . 39
  - Ignition Failure Sensor Check . . . . . 40
  - Camshaft Position Sensor Check, Crank angle Sensor Check, Detonation Sensor Check . . . 40
- IGNITION COIL <6G7> . . . . . 41
- CRANKSHAFT ANGLE SENSOR <6G7> . . . . . 42
- CAMSHAFT POSITION SENSOR <6G7> . . . . . 42
- DETONATION SENSOR <6G7> . . . . . 43

GLOW SYSTEM . . . . . 44
- GENERAL INFORMATION . . . . . 44
- SERVICE SPECIFICATIONS . . . . . 45
- ON-VEHICLE SERVICE . . . . . 45
  - Self-regulating Glow System Check . . . . . 45
  - Glow & EGR Control Unit Check . . . . . 48
  - Engine ECU Check . . . . . 49
  - Glow Plug Relay Check . . . . . 50
  - Glow Plug Check . . . . . 51
  - Engine Coolant Temperature Sensor Check . . . . . 51
- GLOW PLUG . . . . . 52


Purchased from www.WorkshopManuals.co.uk

www.WorkshopManuals.co.uk

# CHARGING SYSTEM

## GENERAL INFORMATION

The charging system uses the alternator output to keep the battery charged at a constant level under various electrical loads.

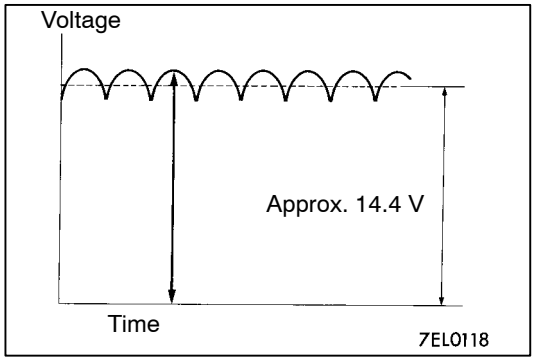


### OPERATION

Rotation of the excited field coil generates AC voltage in the stator.
This alternating current is rectified through diodes to DC voltage having a waveform shown in the illustration at left. The average output voltage fluctuates slightly with the alternator load condition.

When the ignition switch is turned on, current flows in the field coil and initial excitation of the field coil occurs.
When the stator coil begins to generate power after the engine is started, the field coil is excited by the output current of the stator coil.
The alternator output voltage rises as the field current increases and it falls as the field current decreases. When the battery voltage (alternator S terminal voltage) reaches a regulated voltage of approximately 14.4 V, the field current is cut off. When the battery voltage drops below the regulated voltage, the voltage regulator regulates the output voltage to a constant level by controlling the field current.
In addition, when the field current is constant, the alternator output voltage rises as the engine speed increases.

### SYSTEM DIAGRAM

**<6G7>**

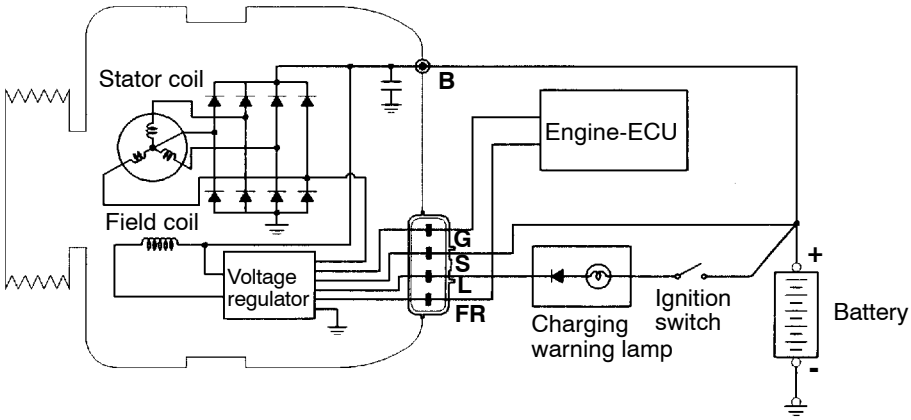


Purchased from www.WorkshopManuals.co.uk

www.WorkshopManuals.co.uk

<4D5, 4M4>

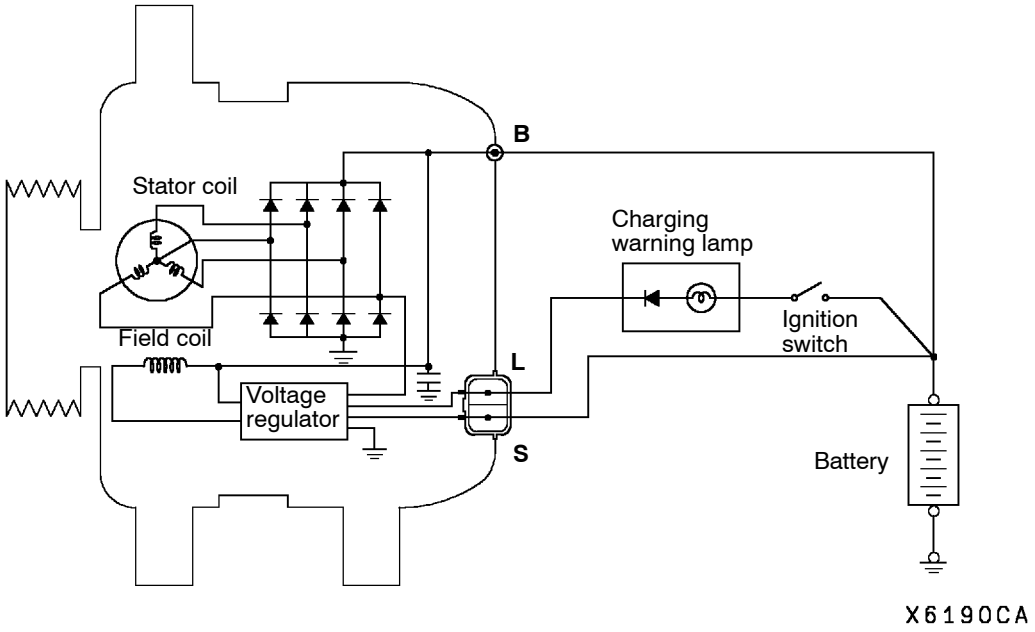


## ALTERNATOR SPECIFICATIONS

| Items | 6G7, 4M4 | 4D5 |
|---|---|---|
| Type | Battery voltage sensing | Battery voltage sensing |
| Rated output V/A | 12/125 | 12/105 |
| Voltage regulator | Electronic built-in type | Electronic built-in type |

# SERVICE SPECIFICATIONS

| Items | | Standard value | Limit |
|---|---|---|---|
| Alternator output line voltage drop (at 30A) V | | - | Max. 0.3 |
| Regulated voltage ambient temp. at voltage regulator V | -20°C | 14.2 - 15.4 | - |
| | 20°C | 13.9 - 14.9 | - |
| | 60°C | 13.4 - 14.6 | - |
| | 80°C | 13.1 - 14.5 | - |
| Output current | | - | 70% of normal output current |
| Rotor coil resistance Ω | | Approx. 2 - 5 | - |
| Maximum vacuum (at 3,000 r/min) <4D56> kPa | | 90.6 | - |
| Protrusion length of brush mm | 6G7, 4D5 | - | 2 |
| | 4M4 | - | 5 |

Purchased from www.WorkshopManuals.co.uk

www.WorkshopManuals.co.uk

## SPECIAL TOOL

| Tool | Number | Name | Use |
|---|---|---|---|
| 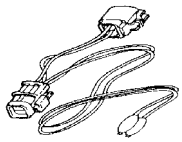 | MD998467 | Alternator test harness | Checking the alternator (S terminal voltage) <4D5, 4M4> |
| 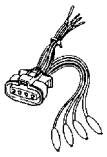 | MB991519 | Alternator test harness | Checking the alternator (S terminal voltage) <6G7> |

Purchased from www.WorkshopManuals.co.uk

www.WorkshopManuals.co.uk

# ON-VEHICLE SERVICE

## ALTERNATOR OUTPUT LINE VOLTAGE DROP TEST

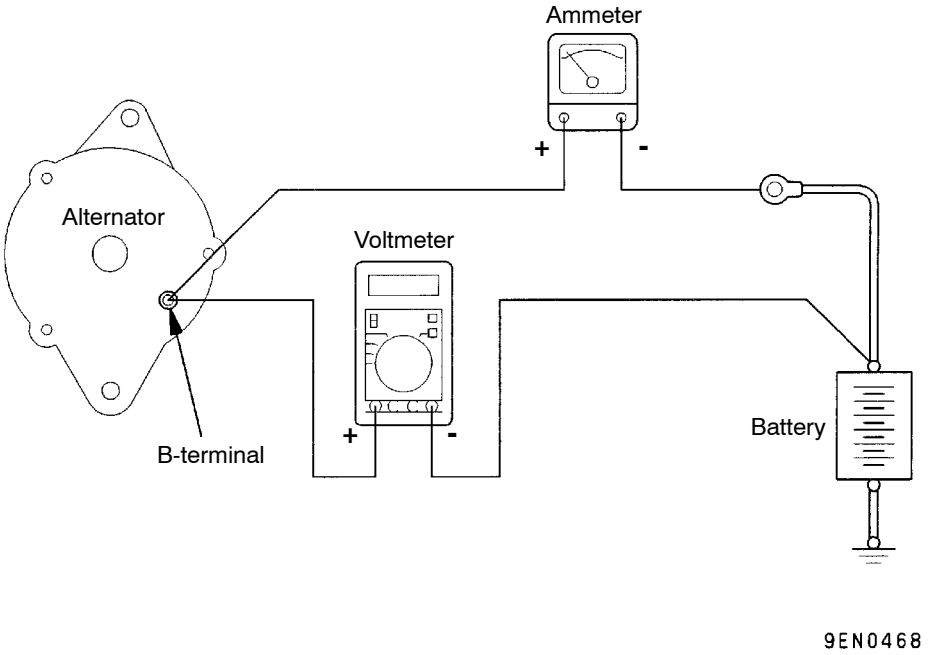


This test determines whether the wiring from the alternator “B” terminal to the battery (+) terminal (including the fusible line) is in a good condition or not.

1. Always be sure to check the following before the test.
   - Alternator installation
   - Alternator drive belt tension
   - Fusible link
   - Abnormal noise from the alternator while the engine is running
2. Turn the ignition switch off.
3. Disconnect the negative battery cable.
4. Disconnect the alternator output wire from the alternator “B” terminal and connect a DC test ammeter with a range of 0-150 A in series between the “B” terminal and the disconnected output wire. (Connect the (+) lead of the ammeter to the “B” terminal, and then connect the (-) lead of the ammeter to the disconnected output wire.)

   NOTE
   An inductive-type ammeter which enables measurements to be taken without disconnecting the alternator output wire should be recommended. Using this equipment will lessen the possibility of a voltage drop caused by a loose “B” terminal connection.
5. Connect a digital-type voltmeter between the alternator “B” terminal and the battery (+) terminal. (Connect the (+) lead of the voltmeter to the “B” terminal and the connect the (-) lead of the voltmeter to the battery (+) cable.)

Purchased from www.WorkshopManuals.co.uk

www.WorkshopManuals.co.uk

6. Reconnect the negative battery cable.
7. Connect a tachometer or the MUT-II.
8. Leave the hood open.
9. Start the engine.
10. With the engine running at 2,500 r/min, turn the headlamps and other lamps on and off to adjust the alternator load so that the value displayed on the ammeter is slightly above 30 A.
    Adjust the engine speed by gradually decreasing it until the value displayed on the ammeter is 30 A. Take a reading of the value displayed on the voltmeter at this time.

    **Limit: max. 0.3 V**

    NOTE
    When the alternator output is high and the value displayed on the ammeter does not decrease until 30 A, set the value to 40 A. Read the value displayed on the voltmeter at this time. When the value range is 40 A, the limit is max. 0.4 V.
11. If the value displayed on the voltmeter is above the limit value, there is probably a malfunction in the alternator output wire, so check the wiring between the alternator "B" terminal and the battery (+) terminal (including fusible link).
    If a terminal is not sufficiently tight or if the harness has become discolored due to overheating, repair and then test again.
12. After the test, run the engine at idle.
13. Turn off all lamps and the ignition switch.
14. Remove the tachometer or the MUT-II.
15. Disconnect the negative battery cable.
16. Disconnect the ammeter and voltmeter.
17. Connect the alternator output wire to the alternator "B" terminal.
18. Connect the negative battery cable.

## OUTPUT CURRENT TEST

**<6G7>**

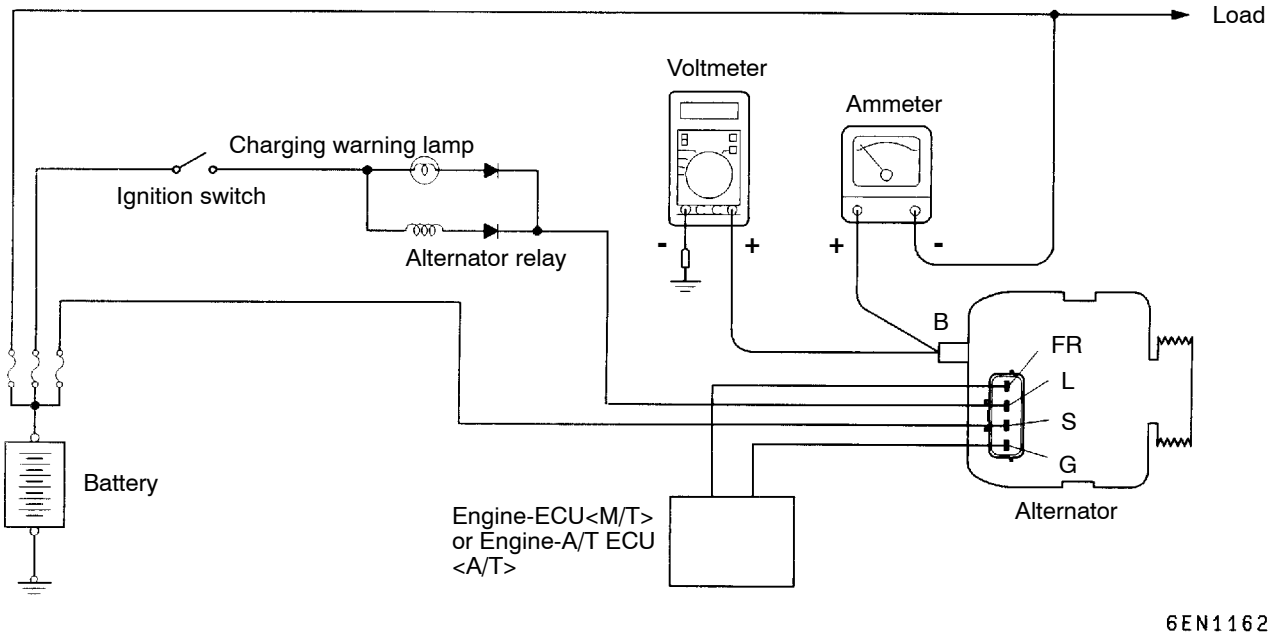


Purchased from www.WorkshopManuals.co.uk

www.WorkshopManuals.co.uk

**<4D5, 4M4>**

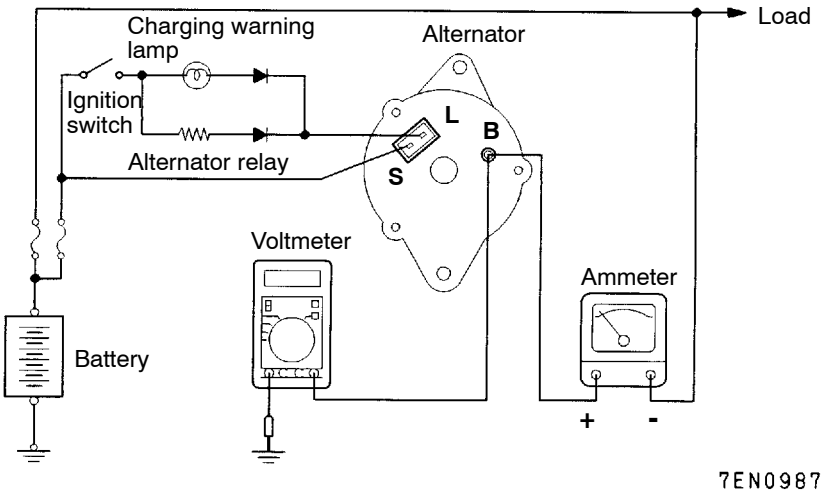


This test determines whether the alternator output current is normal.

1. Before the test, always be sure to check the following.
   - Alternator installation
   - Battery

     NOTE
     The battery should be slightly discharged. The load needed by a fully-charged battery is insufficient for an accurate test.
   - Alternator drive belt tension
   - Fusible link
   - Abnormal noise from the alternator while the engine is running.
2. Turn the ignition switch off.
3. Disconnect the negative battery cable.
4. Disconnect the alternator output wire from the alternator "B" terminal. Connect a DC test ammeter with a range of 0-100 A in series between the "B" terminal and the disconnected output wire. (Connect the (+) lead of the ammeter to the "B" terminal. Connect the (-) lead of the ammeter to the disconnected output wire.)

   **Caution**
   **Never use clips but tighten bolts and nuts to connect the line. Otherwise loose connections (e.g. using clips) will lead to a serious accident because of high current.**

   NOTE
   An inductive-type ammeter which enables measurements to be taken without disconnecting the alternator output wire should be recommended.
5. Connect a voltmeter with a range of 0-20 V between the alternator "B" terminal and the earth. (Connect the (+) lead of the voltmeter to the "B" terminal, and then connect the (-) lead of the voltmeter to the earth.)
6. Connect the negative battery cable.
7. Connect a tachometer or the MUT-II.
8. Leave the hood open.
9. Check that the reading on the voltmeter is equal to the battery voltage.

   NOTE
   If the voltage is 0 V, the cause is probably an open circuit in the wire or fusible link between the alternator "B" terminal and the battery (+) terminal.

Purchased from www.WorkshopManuals.co.uk

www.WorkshopManuals.co.uk

10. Turn the light switch on to turn on headlamps and then start the engine.
11. Immediately after setting the headlamps to high beam and turning the heater blower switch to the high revolution position, increase the engine speed to 2,500 r/min and read the maximum current output value displayed on the ammeter.

    **Limit: 70% of normal current output**

    NOTE
    - For the nominal current output, refer to the Alternator Specifications.
    - Because the current from the battery will soon drop after the engine is started, the above step should be carried out as quickly as possible in order to obtain the maximum current output value.
    - The current output value will depend on the electrical load and the temperature of the alternator body.
    - If the electrical load is small while testing, the specified level of current may not be output even though the alternator is normal. In such cases, increase the electrical load by leaving the headlamps turned on for some time to discharge the battery or by using the lighting system in another vehicle, and then test again.
    - The specified level of current also may not be output if the temperature of the alternator body or the ambient temperature is too high. In such cases, cool the alternator and then test again.
12. The reading on the ammeter should be above the limit value. If the reading is below the limit value and the alternator output wire is normal, remove the alternator from the engine and check the alternator.
13. Run the engine at idle after the test.
14. Turn the ignition switch off.
15. Remove the tachometer or the MUT-II.
16. Disconnect the negative battery cable.
17. Disconnect the ammeter and voltmeter.
18. Connect the alternator output wire to the alternator “B” terminal.
19. Connect the negative battery cable.

## REGULATED VOLTAGE TEST

**<6G7>**

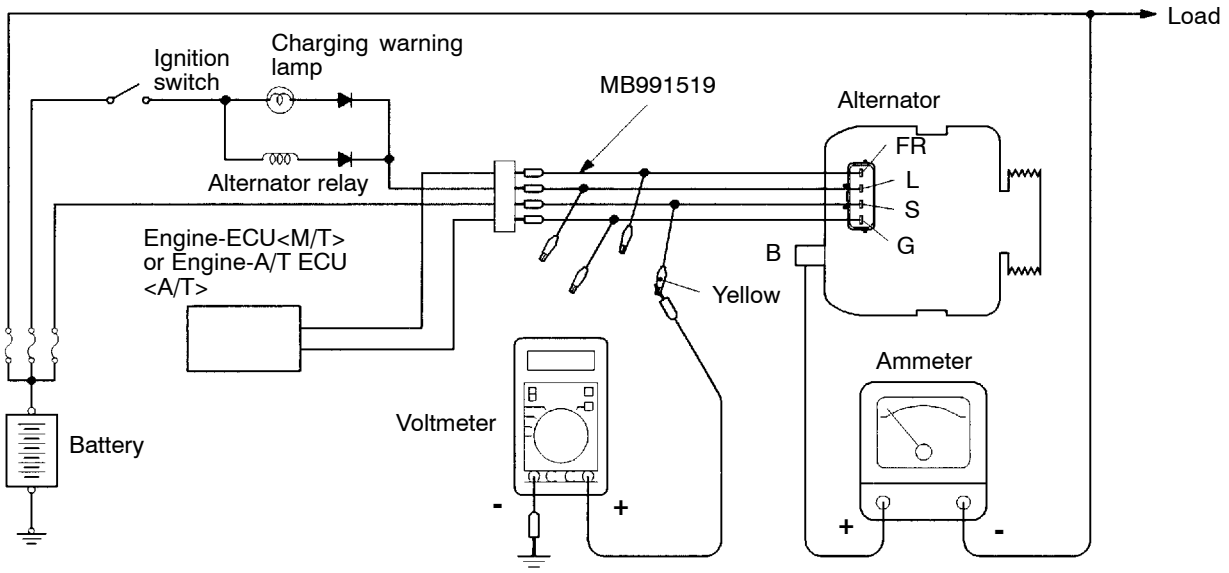


9EN0871

Purchased from www.WorkshopManuals.co.uk

www.WorkshopManuals.co.uk

<4D5, 4M4>

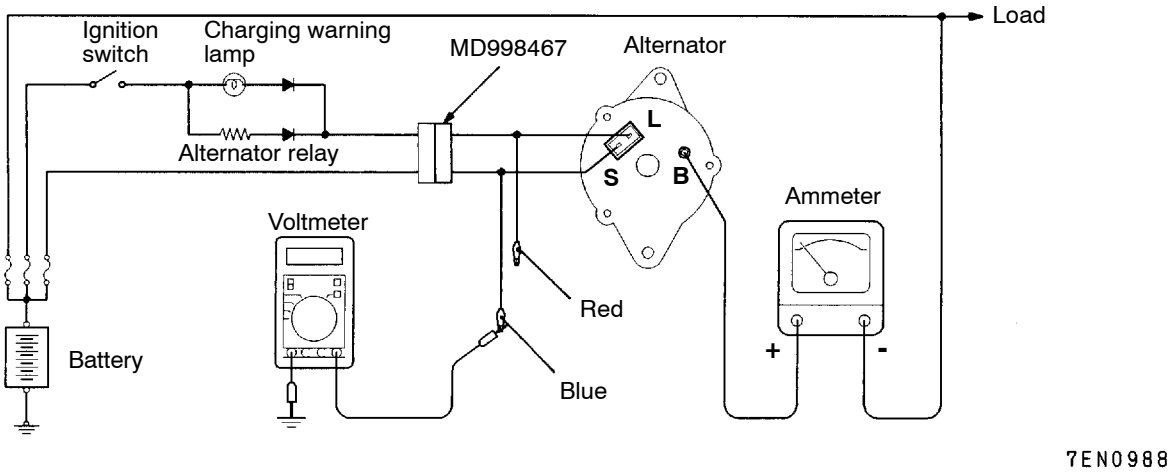


This test determines whether the voltage regulator is correctly controlling the alternator output voltage.

1. Always be sure to check the following before the test.
   - Alternator installation
   - Check that the battery installed in the vehicle is fully charged.
   - Alternator drive belt tension
   - Fusible link
   - Abnormal noise from the alternator while the engine is running
2. Turn the ignition switch off.
3. Disconnect the negative battery cable.
4. Use the special tool (Alternator test harness: MD998467 or MB991519) to connect a digital voltmeter between the alternator S terminal and earth. (Connect the (+) lead of the voltmeter to the "S" terminal, and then connect the (-) lead of the voltmeter to a secure earth or to the battery (-) terminal.)
5. Disconnect the alternator output wire from the alternator "B" terminal.
6. Connect a DC test ammeter with a range of 0-100 A in series between the "B" terminal and the disconnected output wire. (Connect the (+) lead of the ammeter to the "B" terminal. Connect the (-) lead of the ammeter to the disconnected output wire.)
7. Reconnect the negative battery cable.
8. Connect a tachometer or the MUT-II.
9. Turn the ignition switch to the ON position and check that the reading on the voltmeter is equal to the battery voltage.

   NOTE
   If the voltage is 0 V, the cause is probably an open circuit in the wire or fusible link between the alternator "S" terminal and the battery (+) terminal.

10. Turn all lamps and accessories off.
11. Start the engine.
12. Increase the engine speed to 2,500 r/min.
13. Read the value displayed on the voltmeter when the alternator output current alternator becomes 10 A or less.

Purchased from www.WorkshopManuals.co.uk

www.WorkshopManuals.co.uk

14. If the voltage reading conforms to the value in the voltage regulation, then the voltage regulator is operating normally.
    If the voltage is not within the standard value, there is a malfunction of the voltage regulator or of the alternator.
15. After the test, lower the engine speed to the idle speed.
16. Turn the ignition switch off.
17. Remove the tachometer or the MUT-II.
18. Disconnect the negative battery cable.
19. Disconnect the ammeter and voltmeter.
20. Connect the alternator output wire to the alternator “B” terminal.
21. Remove the special tool, and return the connector to the original condition.
22. Connect the negative battery cable.

**Voltage Regulation Table**

**Standard value:**

| Inspection terminal | Voltage regulator ambient temperature °C | Voltage V |
|---|---|---|
| Terminal “S” | -20 | 14.2 - 15.4 |
| | 20 | 13.9 - 14.9 |
| | 60 | 13.4 - 14.6 |
| | 80 | 13.1 - 14.5 |

Purchased from www.WorkshopManuals.co.uk

www.WorkshopManuals.co.uk

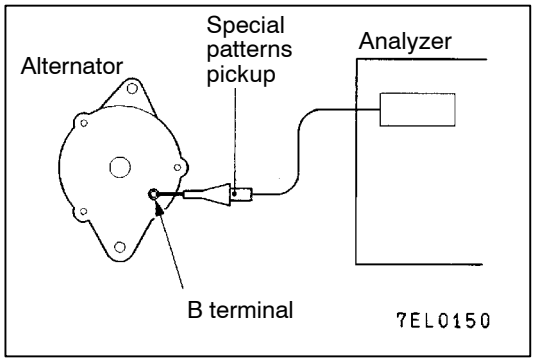


## WAVEFORM CHECK USING AN ANALYZER

### MEASUREMENT METHOD

Connect the analyzer special patterns pick-up to the alternator B terminal.

### STANDARD WAVEFORM

**Observation Conditions**

| | |
|---|---|
| FUNCTION | SPECIAL PATTERNS |
| PATTERN HEIGHT | VARIABLE |
| VARIABLE knob | Adjust while viewing the waveform. |
| PATTERN SELECTOR | RASTER |
| Engine speed | Curb idle speed |

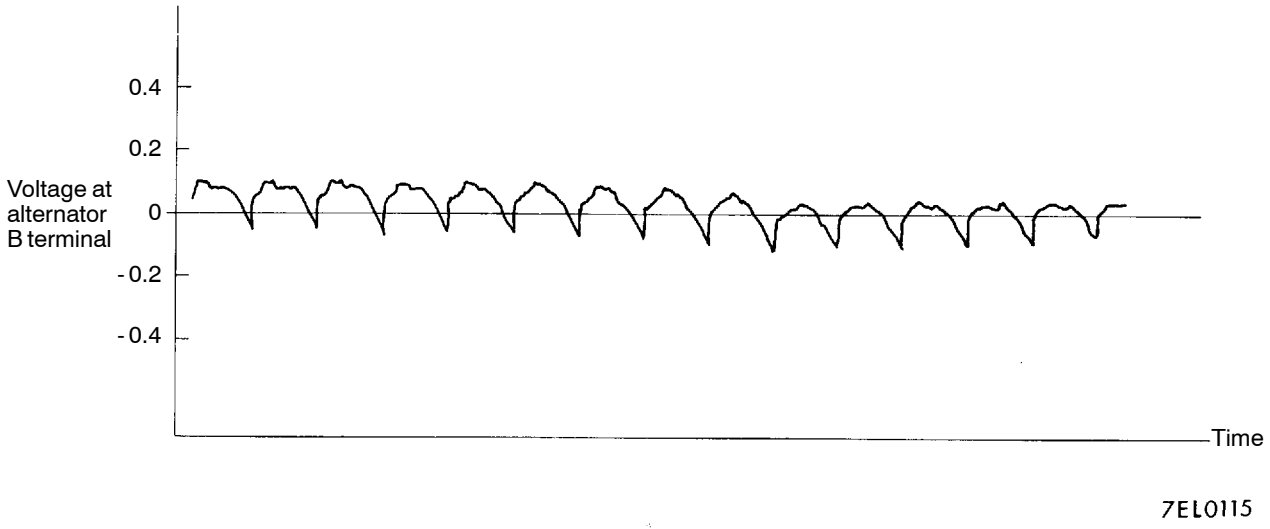


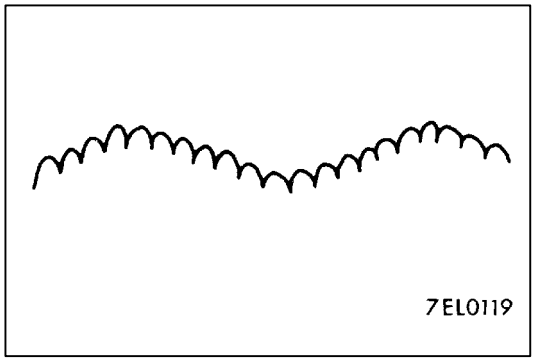


NOTE
The voltage waveform of the alternator B terminal can undulate as shown at left. This waveform is produced when the regulator operates according to fluctuations in the alternator load (current), and is normal for the alternator.
In addition, when the voltage waveform reaches an excessively high value (approx. 2 V or higher at idle), it often indicates an open circuit due to a brown fuse between alternator B terminal and battery, but not a defective alternator.

Purchased from www.WorkshopManuals.co.uk

www.WorkshopManuals.co.uk

## EXAMPLES OF ABNORMAL WAVEFORMS

NOTE
1. The size of the waveform patterns differs largely, depending on the adjustment of the variable knob on the analyzer.
2. Identification of abnormal waveforms is easier when there is a large output current (regulator is not operating). (Waveforms can be observed when the headlamps are illuminated.)
3. Check the conditions of the charging warning lamp (illuminated/not illuminated). Also, check the charging system totally.

| Abnormal waveforms | Problem cause | Abnormal waveforms | Problem cause |
|---|---|---|---|
| Example 1 A7EL0120 | Open diode | Example 4 A7EL0123 | Short in stator coil |
| Example 2 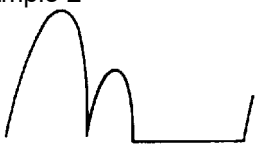 A7EL0121 | Short in diode | Example 5 A7EL0124 NOTE At this time, the charging warning lamp is illuminated. | Open supple-mentary diode |
| Example 3 A7EL0122 | Broken wire in stator coil | | |

Purchased from www.WorkshopManuals.co.uk

www.WorkshopManuals.co.uk

# ALTERNATOR

## REMOVAL AND INSTALLATION

**<6G7>**

**Pre-removal and Post-installation Operation**
- Air Cleaner Assembly Removal and Installation (Refer to GROUP 15.)
- Drive Belt Removal and Installation (Refer to GROUP 11A.)

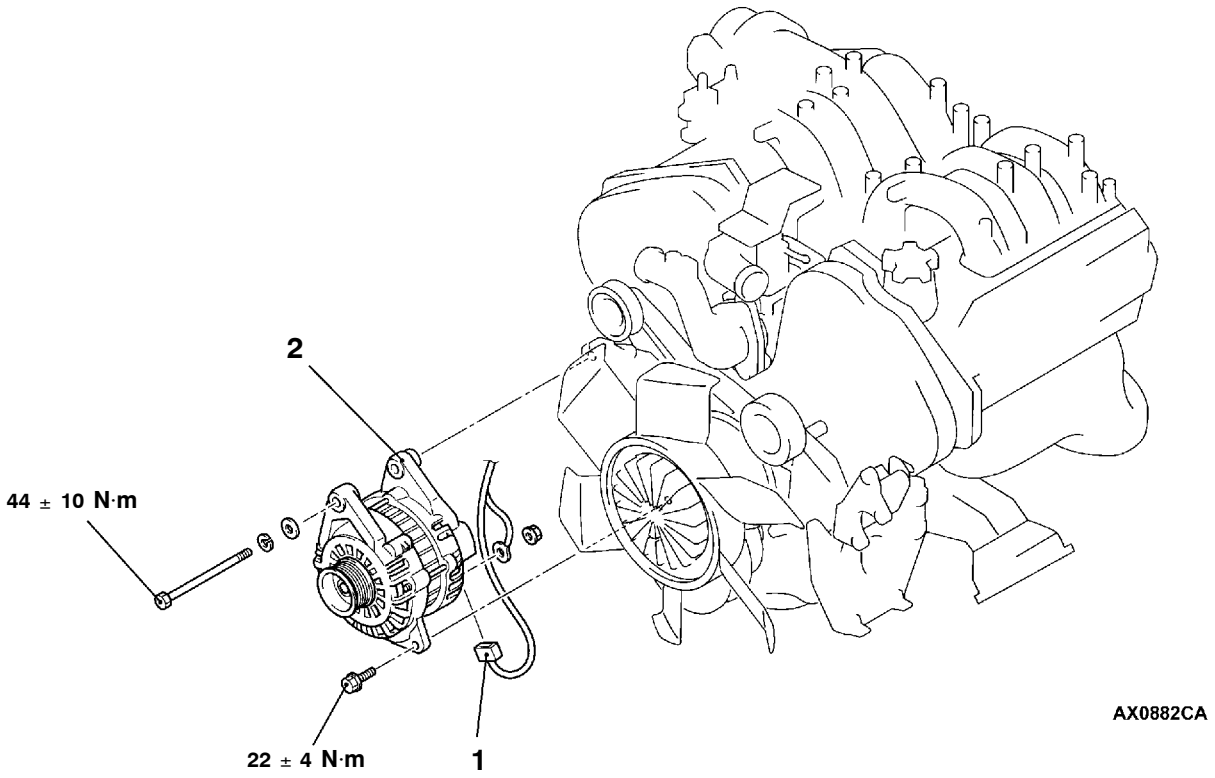


**Disassembly steps**

1. Alternator connector
2. Alternator

Purchased from www.WorkshopManuals.co.uk

www.WorkshopManuals.co.uk

<4D5>

**Pre-removal Operation**
Under Cover Removal

**Post-installation Operation**
- Drive Belt Tension Adjustment (Refer to GROUP 11B – On-vehicle Service.)
- Under Cover Installation

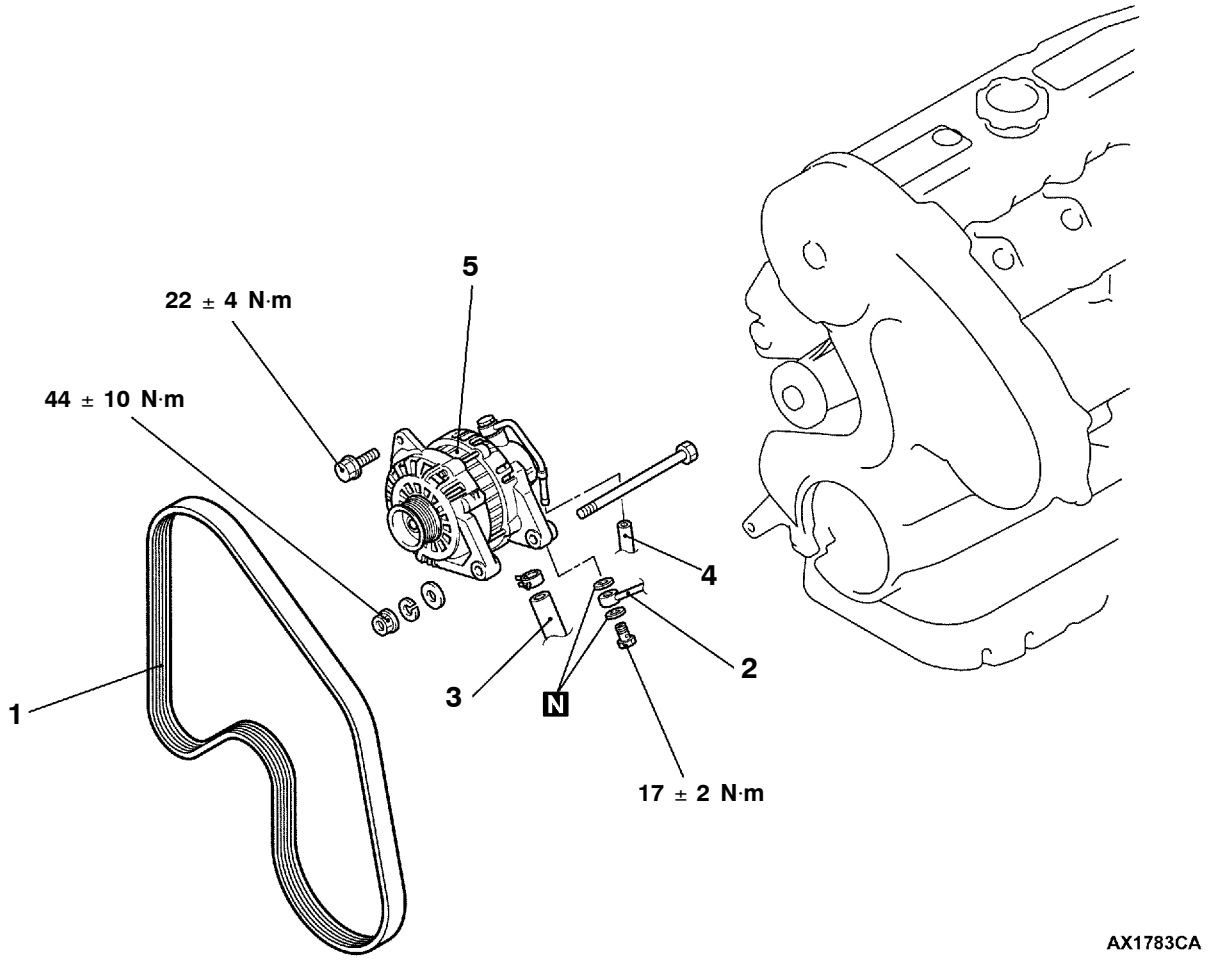


**Disassembly steps**

1. Drive belt
2. Oil pipe connection
3. Oil return hose connection
4. Vacuum hose connection
5. Alternator

Purchased from www.WorkshopManuals.co.uk

www.WorkshopManuals.co.uk

<4M4>

**Pre-removal Operation**
- Air Cleaner Assembly Removal (Refer to GROUP 15.)
- Drive Belt Removal (Refer to GROUP 11C.)

**Post-installation Operation**
- Drive Belt Installation (Refer to GROUP 11C.)
- Drive Belt Tension Adjustment (Refer to GROUP 11C – On-vehicle Service.)
- Air Cleaner Assembly Installation (Refer to GROUP 15.)

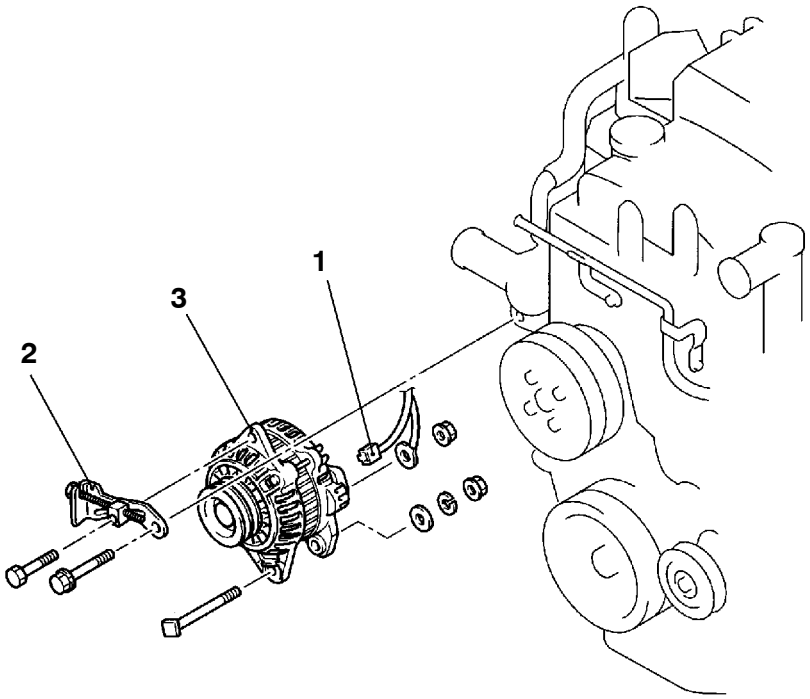

AX0883CA

**Disassembly steps**

1. Alternator connector
2. Adjusting plate
3. Alternator

Purchased from www.WorkshopManuals.co.uk

www.WorkshopManuals.co.uk

## DISASSEMBLY AND REASSEMBLY

**<6G7>**

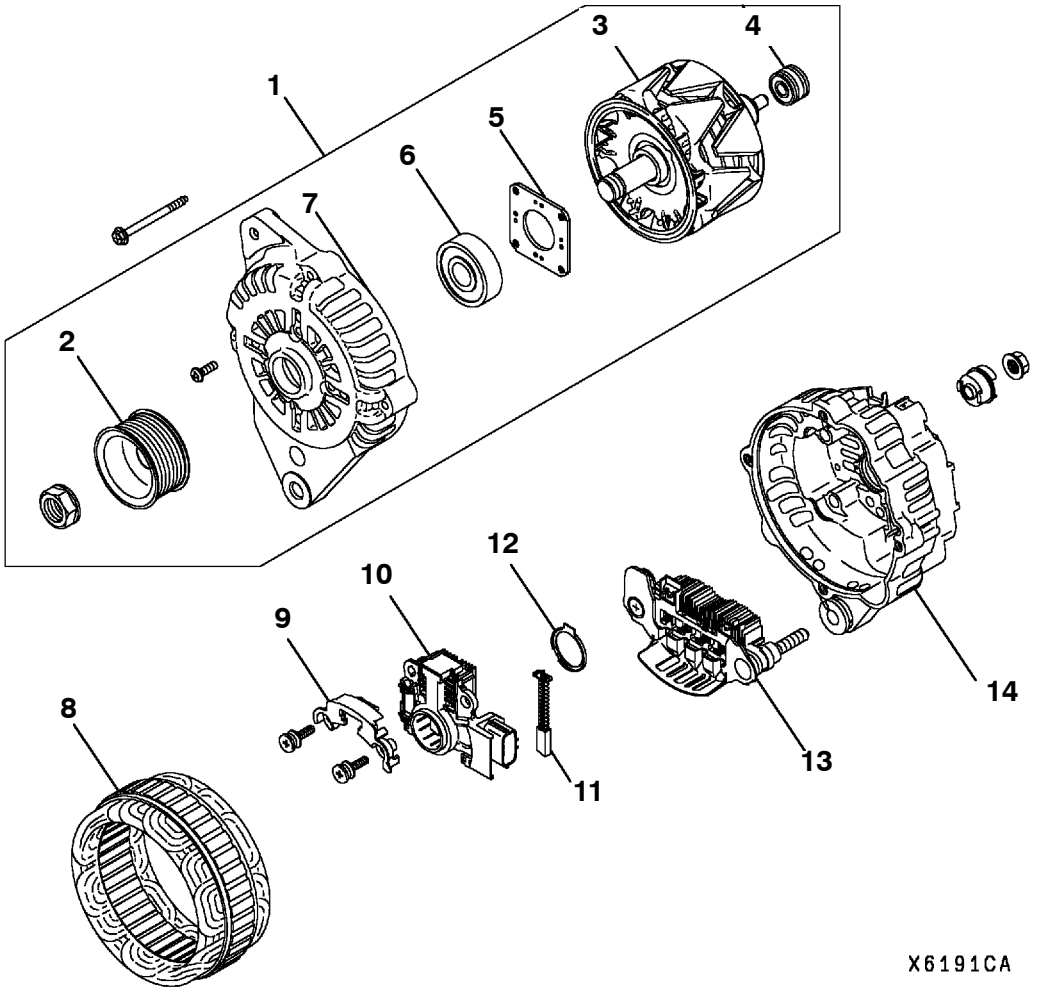


**Disassembly steps**

◀A▶ 1. Front bracket assembly
◀B▶ 2. Pulley
▶B◀ 3. Rotor
4. Rear bearing
5. Bearing retainer
6. Front bearing
7. Front bracket
◀C▶ 8. Stator
9. Plate
◀C▶ ▶A◀ 10. Regulator assembly
11. Brush
12. Slinger
13. Rectifier assembly
14. Rear bracket

Purchased from www.WorkshopManuals.co.uk

www.WorkshopManuals.co.uk

## DISASSEMBLY AND REASSEMBLY

**<4D5>**

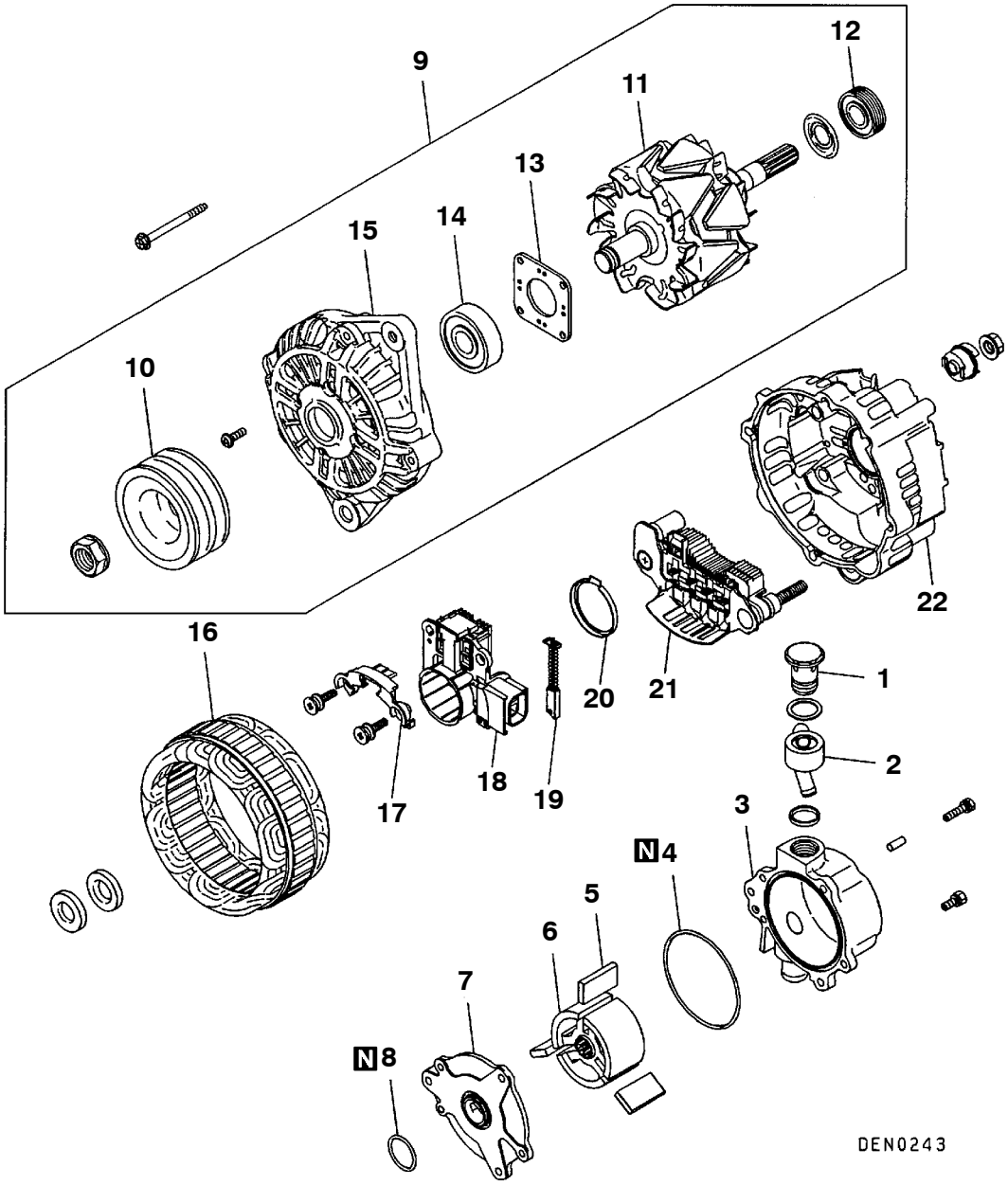


**Disassembly steps**

1. Check valve
2. Nipple
3. Vacuum pump housing
4. O-ring
5. ▶C◀ Vane
6. ▶C◀ Rotor
7. Vacuum pump plate
8. O-ring
9. ◀A▶ Front bracket assembly
10. ◀B▶ Pulley
11. ▶B◀ Rotor
12. Rear bearing
13. Bearing retainer
14. Front bearing
15. Front bracket
16. ◀C▶ Stator
17. Plate
18. ◀C▶ ▶A◀ Regulator assembly
19. Brush
20. Slinger
21. Rectifier assembly
22. Rear bracket

Purchased from www.WorkshopManuals.co.uk

www.WorkshopManuals.co.uk

## DISASSEMBLY AND REASSEMBLY

**<4M4>**

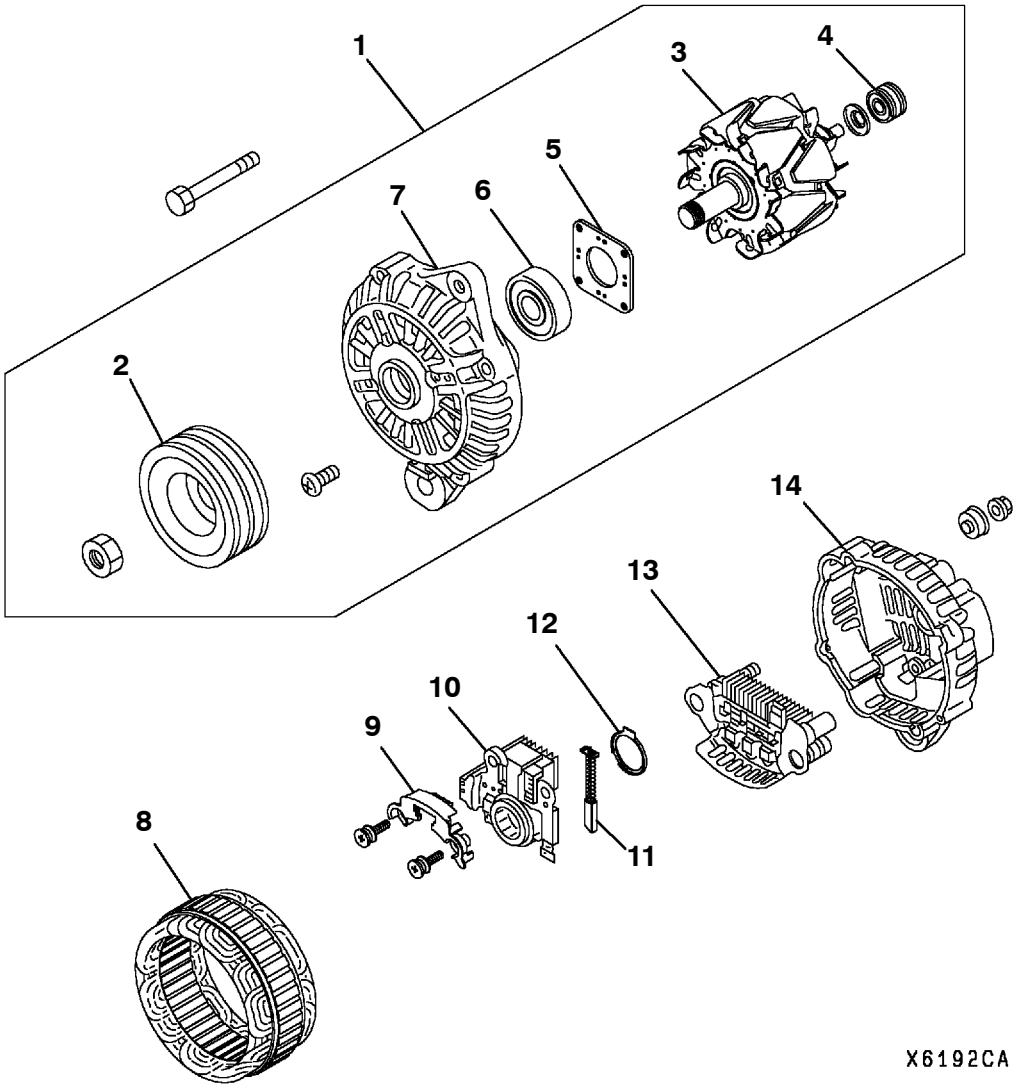


**Disassembly steps**

◀A▶ 1. Front bracket assembly
◀B▶ 2. Pulley
▶B◀ 3. Rotor
4. Rear bearing
5. Bearing retainer
6. Front bearing
7. Front bracket
◀C▶ 8. Stator
9. Plate
◀C▶ ▶A◀ 10. Regulator assembly
11. Brush
12. Slinger
13. Rectifier assembly
14. Rear bracket

Purchased from www.WorkshopManuals.co.uk

www.WorkshopManuals.co.uk

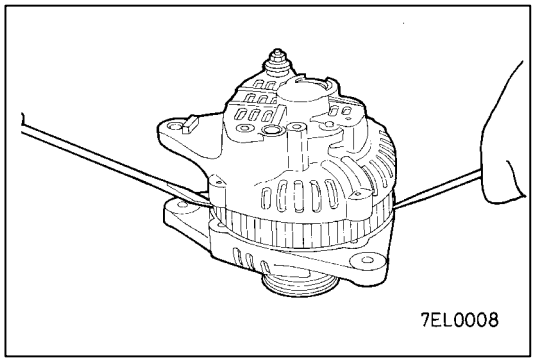


## DISASSEMBLY SERVICE POINTS

### ◀A▶ FRONT BRACKET REMOVAL

1. Remove the bolts.
2. Insert a flat-tipped screwdriver between front bracket and stator core and pry downwards.

   **Caution**
   **Do not insert a screwdriver too deep, as the stator coil will be damaged.**

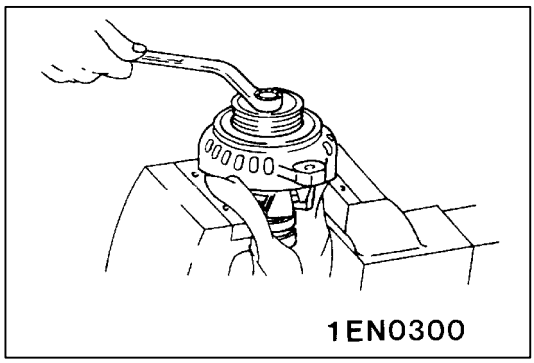


### ◀B▶ PULLEY REMOVAL

With the pulley side facing up, hold the rotor in a vice and remove the pulley.

**Caution**
**Use care not to damage the rotor.**

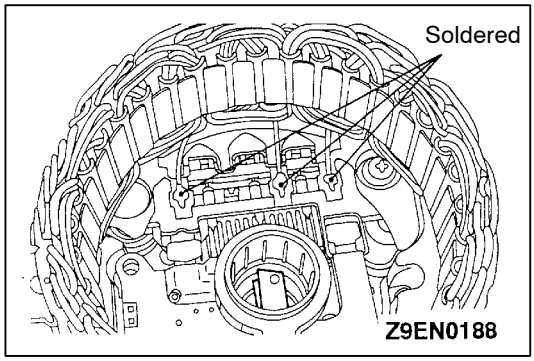


### ◀C▶ STATOR REMOVAL/REGULATOR ASSEMBLY REMOVAL

1. When removing stator, unsolder three stator leads soldered to main diodes on rectifier.
2. When removing rectifier from brush holder, unsolder two soldered points to rectifier.

   **Caution**
   **(1) When soldering or unsoldering, use care to make sure that heat of soldering iron is not transmitted to diodes for a long period. Finish soldering or unsoldering in as short a time as possible.**
   **(2) Use care that no undue force is exerted to leads of diodes.**

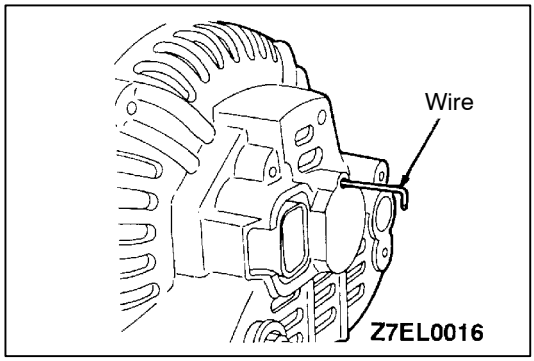


## REASSEMBLY SERVICE POINT

### ▶A◀ REGULATOR ASSEMBLY INSTALLATION

Install the regulator assembly, insert a wire into the rear bracket hole while pushing in the brush, and hold the brush.

NOTE
Inserting a wire holds the brush, so that the rotor can be replaced easily.

Purchased from www.WorkshopManuals.co.uk

www.WorkshopManuals.co.uk

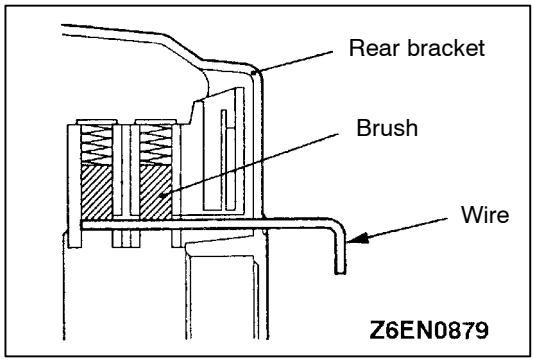


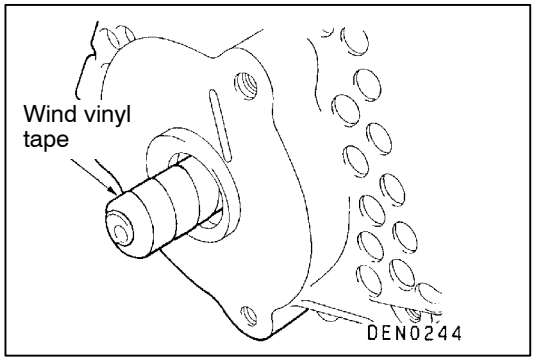


**▶B◀ ROTOR INSTALLATION**

1. When installing the rotor on the alternator rear bracket, wrap vinyl tape around the splined shaft to prevent damage to the oil seal. <4D5>

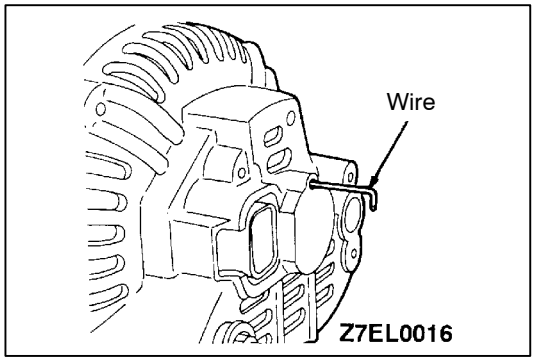


2. After rotor has been installed, remove the wire.

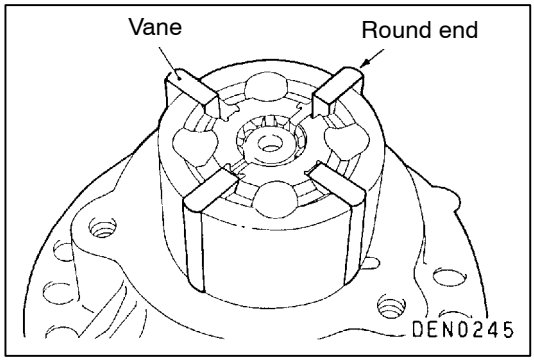


**▶C◀ ROTOR/VANES INSTALLATION <4D5>**

1. Carefully check the housing, rotor, etc. for chips and foreign matter. Then, apply engine oil and install.
2. Install the vanes with the round end facing outward.
3. Apply grease to the O-ring and fit in the housing groove so that it will not come out from the groove when the bolts are tightened.

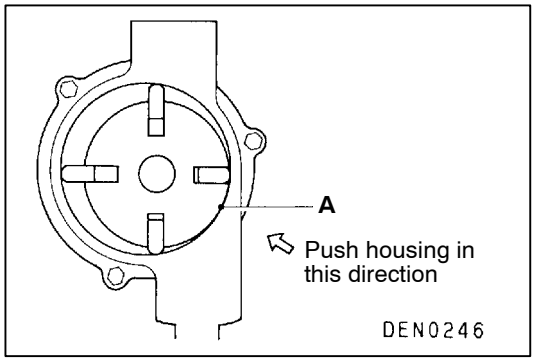


4. When tightening the housing, lightly push it in the direction of arrow so as to minimize the clearance at “A” and tighten the bolts uniformly.

   NOTE
   After assembly, be sure to conduct a performance test to check to see that the maximum vacuum is as specified below.

   **Standard value of maximum vacuum:**
   **90.6 kPa or greater at 3,000 r/min**

Purchased from www.WorkshopManuals.co.uk

www.WorkshopManuals.co.uk

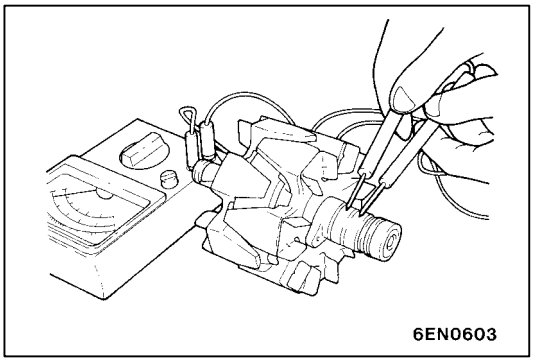


## INSPECTION

### ROTOR

1. Check rotor coil for continuity. Check that there is no continuity between slip rings. If resistance is too small, it means that there is a short circuit. If there is no continuity or if there is a short circuit, replace rotor assembly.

   **Resistance value: Approx. 2 - 5 Ω**

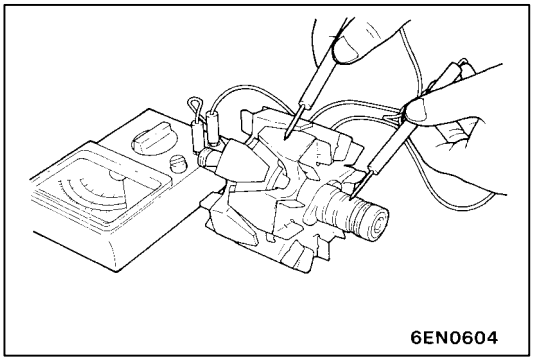


2. Check rotor coil for earthing. Check that there is no continuity between slip ring and core. If there is continuity, replace rotor assembly.

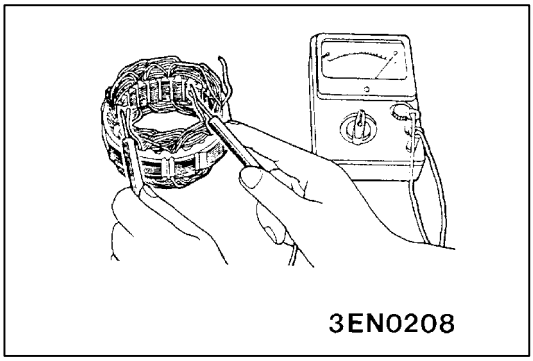


### STATOR

1. Make continuity test on stator coil. Check that there is continuity between coil leads. If there is no continuity, replace stator assembly.

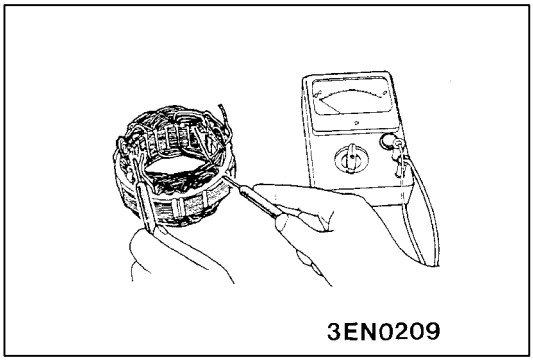


2. Check coil for earthing. Check that there is no continuity between coil and core. If there is continuity, replace stator assembly.

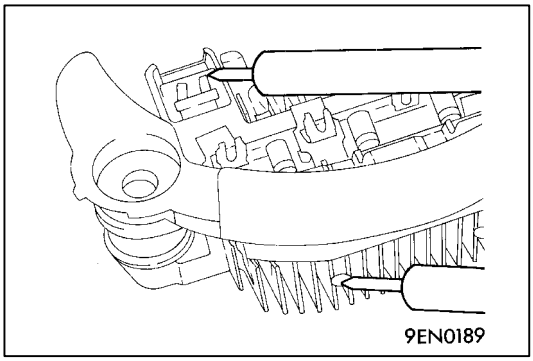


### RECTIFIERS

1. Check for continuity between positive rectifier and stator coil lead connection terminal with an ohmmeter. If there is continuity in both directions, diode is shorted. Replace rectifier assembly.

Purchased from www.WorkshopManuals.co.uk

www.WorkshopManuals.co.uk

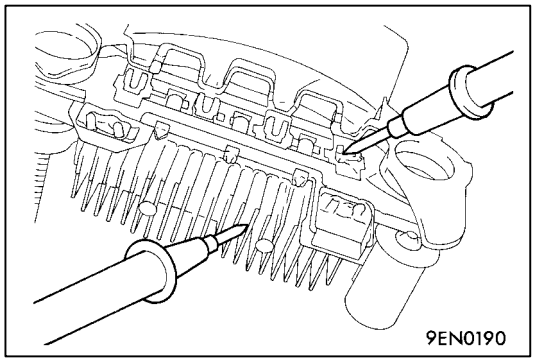


2. Check for continuity between negative rectifier and stator coil lead connection terminal. If there is continuity in both directions, diode is shorted, and rectifier assembly must be replaced.

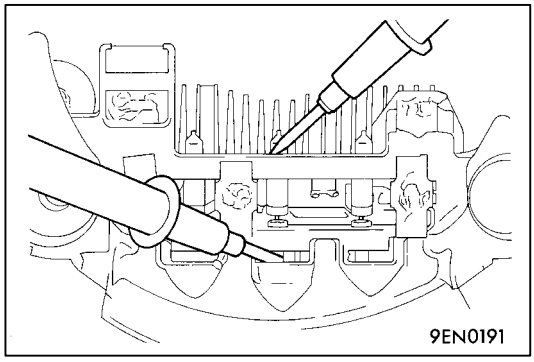


3. Check three diodes for continuity by connecting an ammeter to both ends of each diode. If there is no continuity in both directions, diode is faulty and heatsink assembly must be replaced.

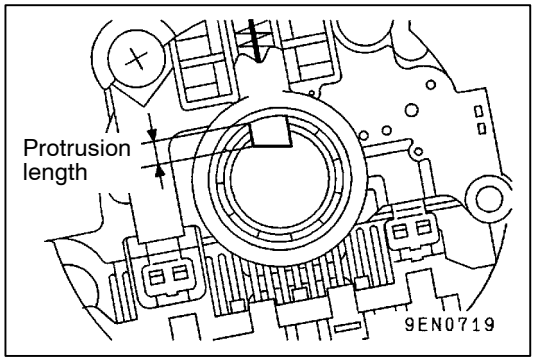


**BRUSH**

1. Replace the brush if its protrusion length is less than the limit.

   **Limit: min. 2 mm <6G7, 4D5>**
   **min. 5 mm <4M4>**

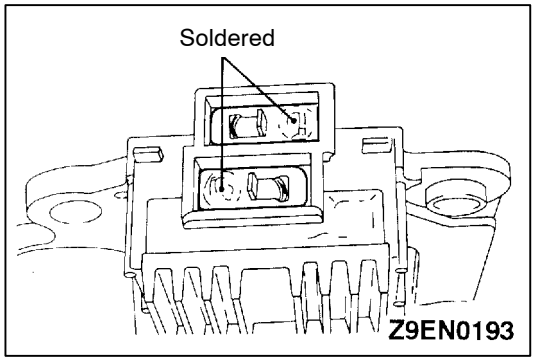


2. Unsolder pigtail and remove old brush and spring.

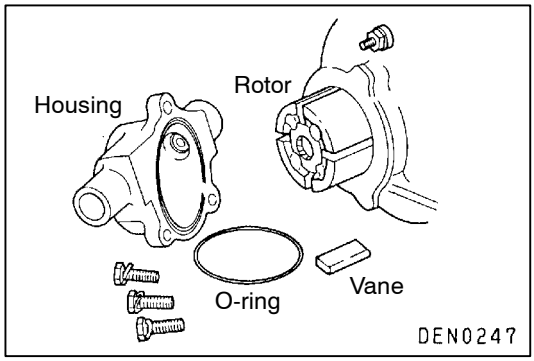


**VACUUM PUMP <4D5>**

Check the following and replace if defective.

1. Check the rotor ends for streaks or damage.
2. Check the housing surface in contact with the rotor for streaks or damage.
3. Check the vanes for damage or breaks.

Purchased from www.WorkshopManuals.co.uk

www.WorkshopManuals.co.uk

# STARTING SYSTEM

16200010368

## GENERAL INFORMATION

If the ignition switch is turned to the “START” position, current flows in the pull-in and holding provided inside magnetic switch, attracting the plunger. When the plunger is attracted, the lever connected to the plunger is actuated to engage the starter clutch.
On the other hand, attracting the plunger will turn on the magnetic switch, allowing the B terminal and M terminal to conduct. Thus, current flows to engage the starter motor.
When the ignition switch is returned to the ”ON” position after starting the engine, the starter clutch is disengaged from the ring gear.
An overrunning clutch is provided between the pinion and the armature shaft, to prevent damage to the starter.

### SYSTEM DIAGRAM

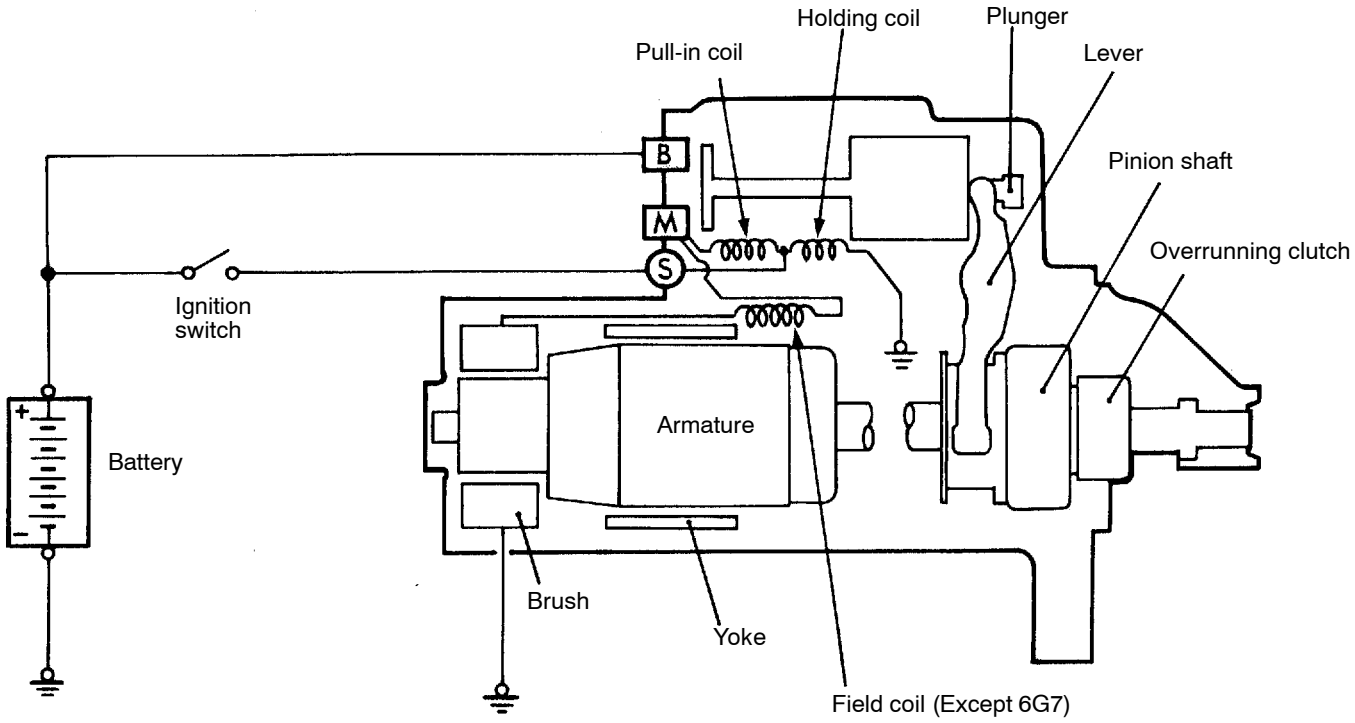


1EN0532

### STARTER MOTOR SPECIFICATIONS

| Items | 6G7 | 4D5, 4M4 |
|---|---|---|
| Type | Reduction drive with planetary gear | Reduction drive with planetary gear |
| Rated output kW/V | 1.2/12 | 2.2/12 |
| No. of pinion teeth | 8 | 12 |

Purchased from www.WorkshopManuals.co.uk

www.WorkshopManuals.co.uk

# SERVICE SPECIFICATIONS

| Items | | Standard value | Limit |
|---|---|---|---|
| Pinion gap mm | | 0.5 - 2.0 | - |
| Commutator outer diameter mm | 6G7 | 29.4 | 28.8 |
| | 4D5, 4M4 | 32 | 31.4 |
| Commutator runout mm | | 0.05 | 0.1 |
| Commutator undercut mm | | 0.5 | 0.2 |

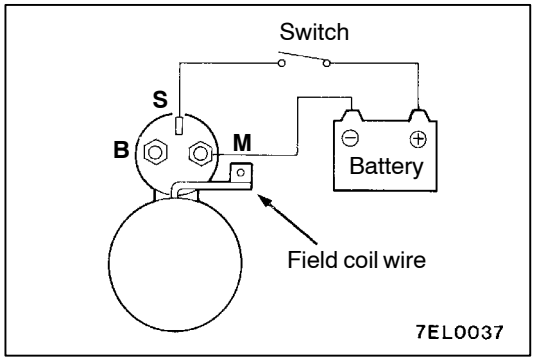


# STARTER MOTOR

16200110327

## INSPECTION

### PINION GAP ADJUSTMENT

1. Disconnect field coil wire from M-terminal of magnetic switch.
2. Connect a 12V battery between S-terminal and M-terminal.
3. Set switch to “ON”, and pinion will move out.

   **Caution**
   **This test must be performed quickly (in less than 10 seconds) to prevent coil from burning.**

4. Check pinion to stopper clearance (pinion gap) with a thickness gauge.

   **Standard value: 0.5 - 2.0 mm**

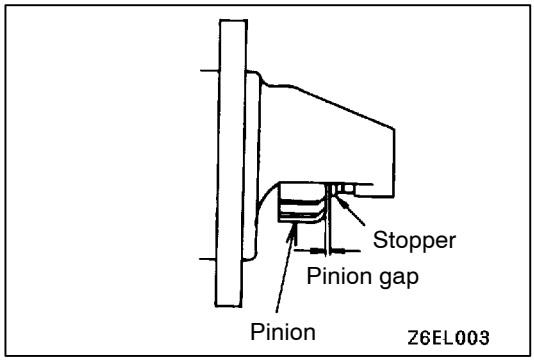


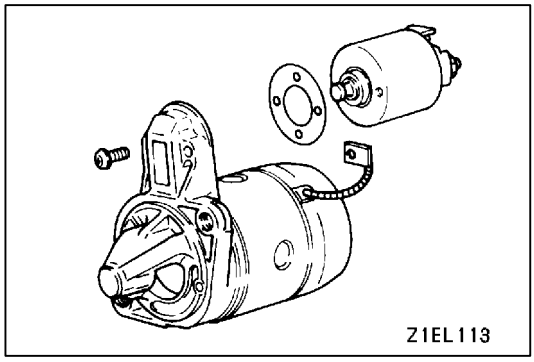


5. If pinion gap is out of specification, adjust by adding or removing gaskets between magnetic switch and front bracket.

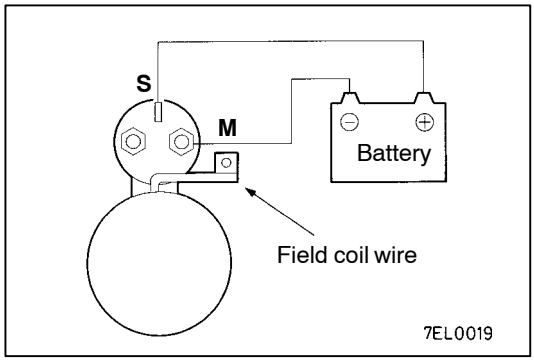


### MAGNETIC SWITCH PULL-IN TEST

1. Disconnect field coil wire from M-terminal of magnetic switch.
2. Connect a 12V battery between S-terminal and M-terminal.

   **Caution**
   **This test must be performed quickly (in less than 10 seconds) to prevent coil from burning.**

3. If pinion moves out, then pull-in coil is good. If it doesn’t, replace magnetic switch.

Purchased from www.WorkshopManuals.co.uk

www.WorkshopManuals.co.uk

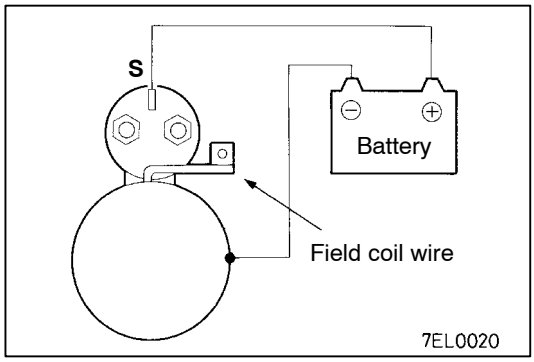


## MAGNETIC SWITCH HOLD-IN TEST

1. Disconnect field coil wire from M-terminal of magnetic switch.
2. Connect a 12V battery between S-terminal and body.

   **Caution**
   **This test must be performed quickly (in less than 10 seconds) to prevent coil from burning.**
3. Manually pull out the pinion as far as the pinion stopper position.
4. If pinion remains out, everything is in order. If pinion moves in, hold-in circuit is open. Replace magnetic switch.

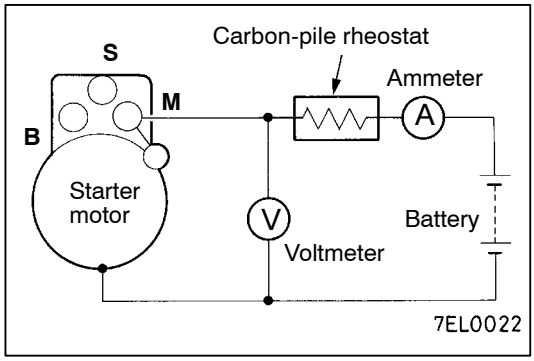


## FREE RUNNING TEST

1. Place starter motor in a vise equipped with soft jaws and connect a fully-charged 12-volt battery to starter motor as follows:
2. Connect a test ammeter (100-ampere scale) and carbon pile rheostat in series with battery positive post and starter motor terminal.
3. Connect a voltmeter (15-volt scale) across starter motor.
4. Rotate carbon pile to full-resistance position.
5. Connect battery cable from battery negative post to starter motor body.
6. Adjust the rheostat until the battery voltage shown by the voltmeter is 11 V.
7. Confirm that the maximum amperage is within the specifications and that the starter motor turns smoothly and freely.

   **Current: max. 90 Amps (6G7)**
   **max. 130 Amps (4D5, 4M4)**

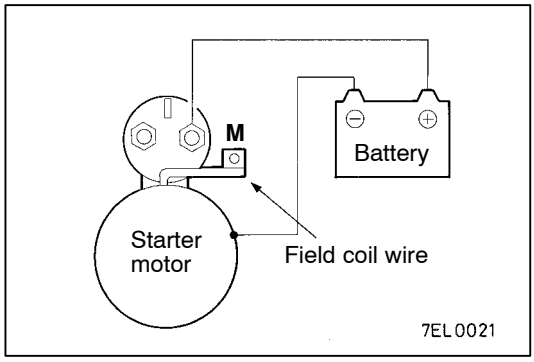


## MAGNETIC SWITCH RETURN TEST

1. Disconnect field coil wire from M-terminal of magnetic switch.
2. Connect a 12V battery between M-terminal and body.

   **Caution**
   **This test must be performed quickly (in less than 10 seconds) to prevent coil from burning.**
3. Pull pinion out and release. If pinion quickly returns to its original position, everything is in order. If it doesn't, replace magnetic switch.

   **Caution**
   **Be careful not to get your fingers caught when pulling out the pinion.**

Purchased from www.WorkshopManuals.co.uk

www.WorkshopManuals.co.uk

## REMOVAL AND INSTALLATION

**Pre-removal and Post-installation Operation**
Under Cover Removal and Installation

<6G7>

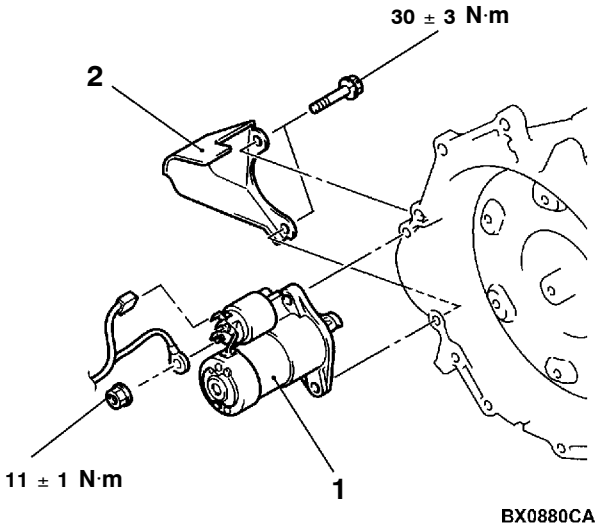


<4D5>

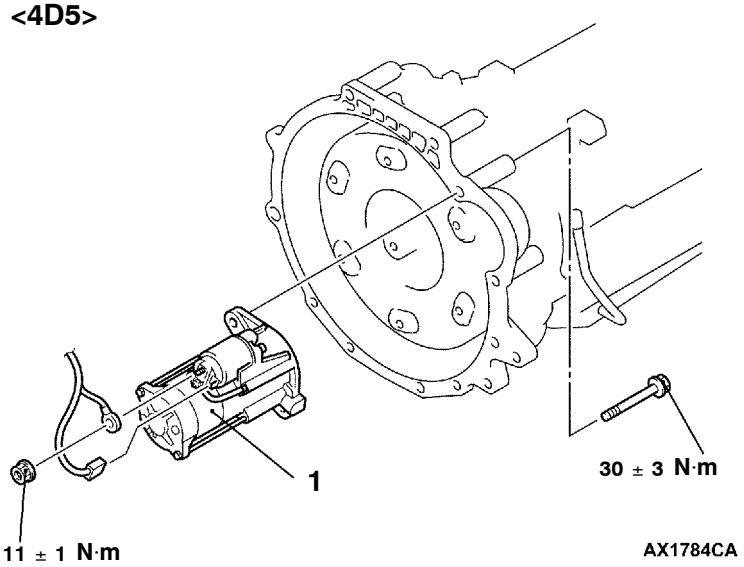


<4M4>

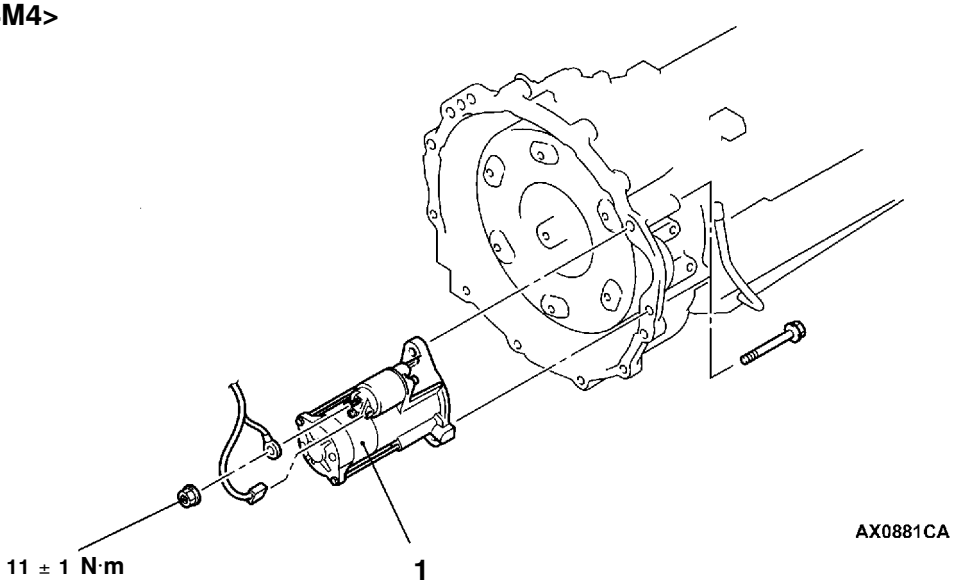


**Disassembly steps**

1. Starter motor assembly
2. Starter cover

Purchased from www.WorkshopManuals.co.uk

www.WorkshopManuals.co.uk

## DISASSEMBLY AND REASSEMBLY <6G7>

16200120290

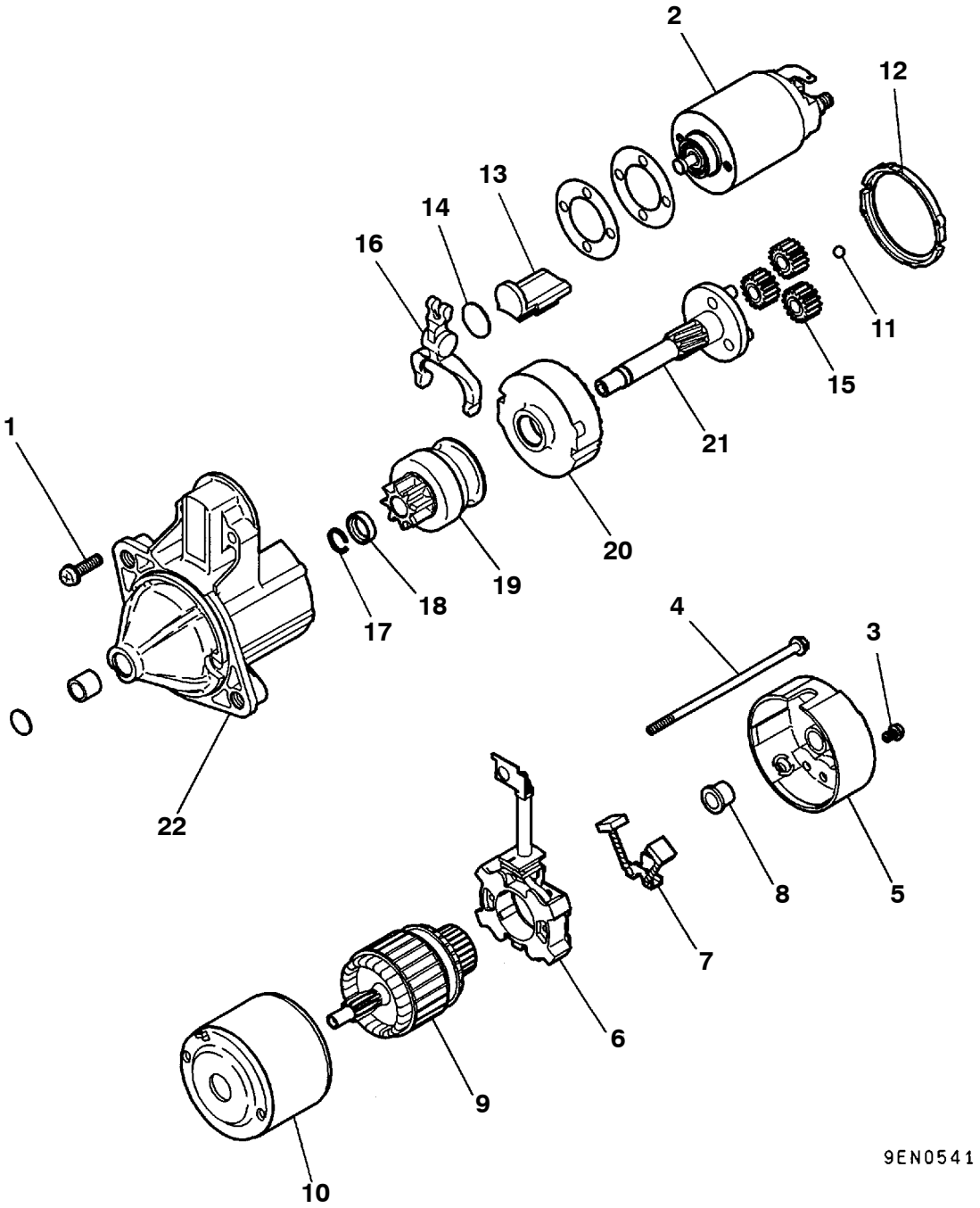


**Disassembly steps**

1. Screw
◀A▶ 2. Magnetic switch
3. Screw
4. Screw
5. Rear bracket
6. Brush holder
7. Brush
8. Rear bearing
◀B▶ 9. Armature
10. Yoke assembly
◀B▶ 11. Ball
12. Packing A
13. Packing B
14. Plate
15. Planetary gear
16. Lever
◀C▶ ▶A◀ 17. Snap ring
◀C▶ ▶A◀ 18. Stop ring
19. Overrunning clutch
20. Internal gear
21. Planetary gear holder
22. Front bracket

Purchased from www.WorkshopManuals.co.uk

www.WorkshopManuals.co.uk

<4D5>

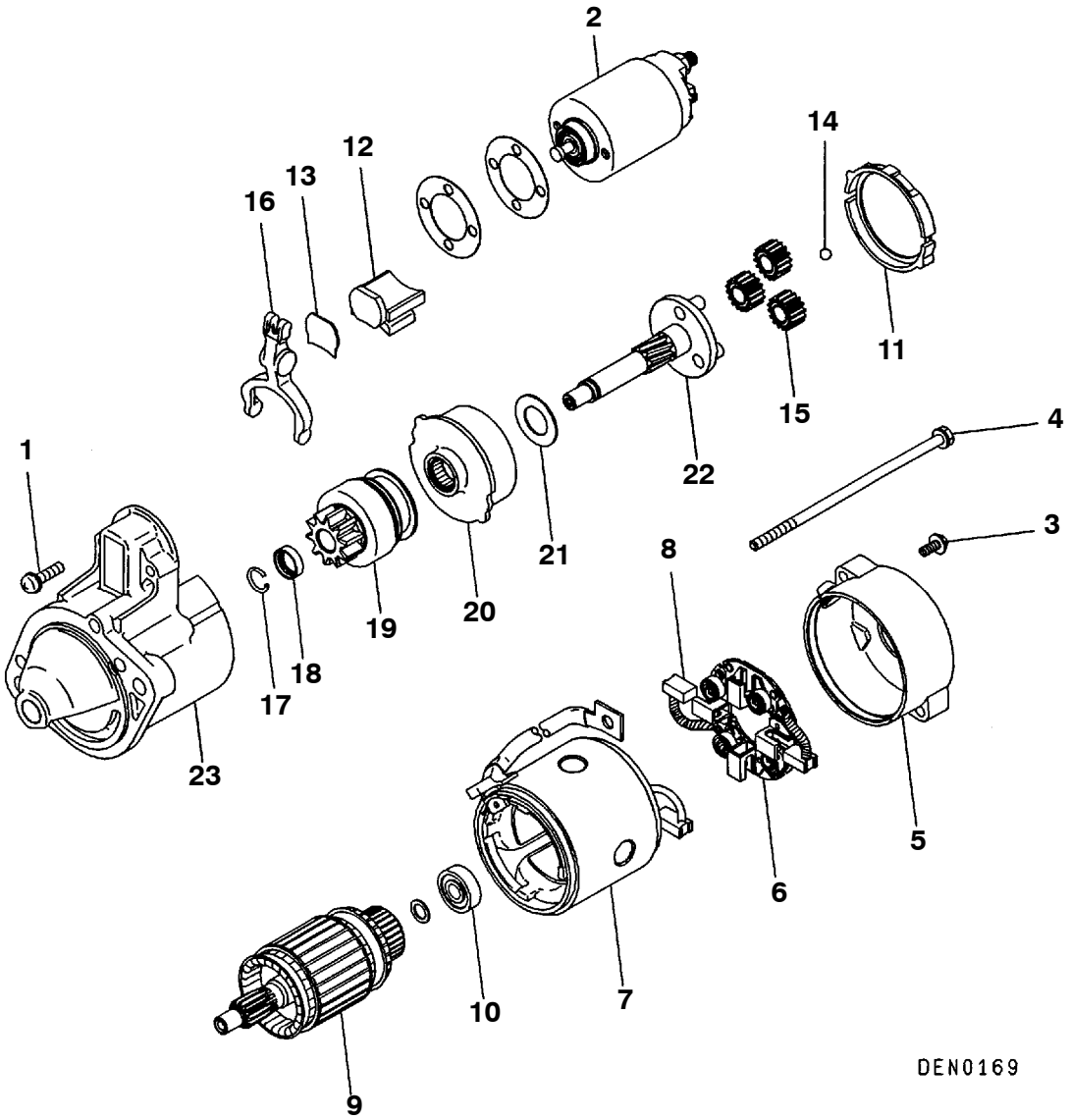


**Disassembly steps**

1. Screw
◀A▶ 2. Magnetic switch
3. Screw
4. Screw
5. Rear bracket
6. Brush holder
7. Yoke assembly
8. Brush
◀B▶ 9. Armature
10. Bearing
11. Packing A
12. Packing B
13. Plate
◀B▶ 14. Ball
15. Planetary gear
16. Lever
◀C▶ ▶A◀ 17. Snap ring
◀C▶ ▶A◀ 18. Stop ring
19. Overrunning clutch
20. Internal gear
21. Washer
22. Planetary gear holder
23. Front bracket

Purchased from www.WorkshopManuals.co.uk

www.WorkshopManuals.co.uk

<4M4>

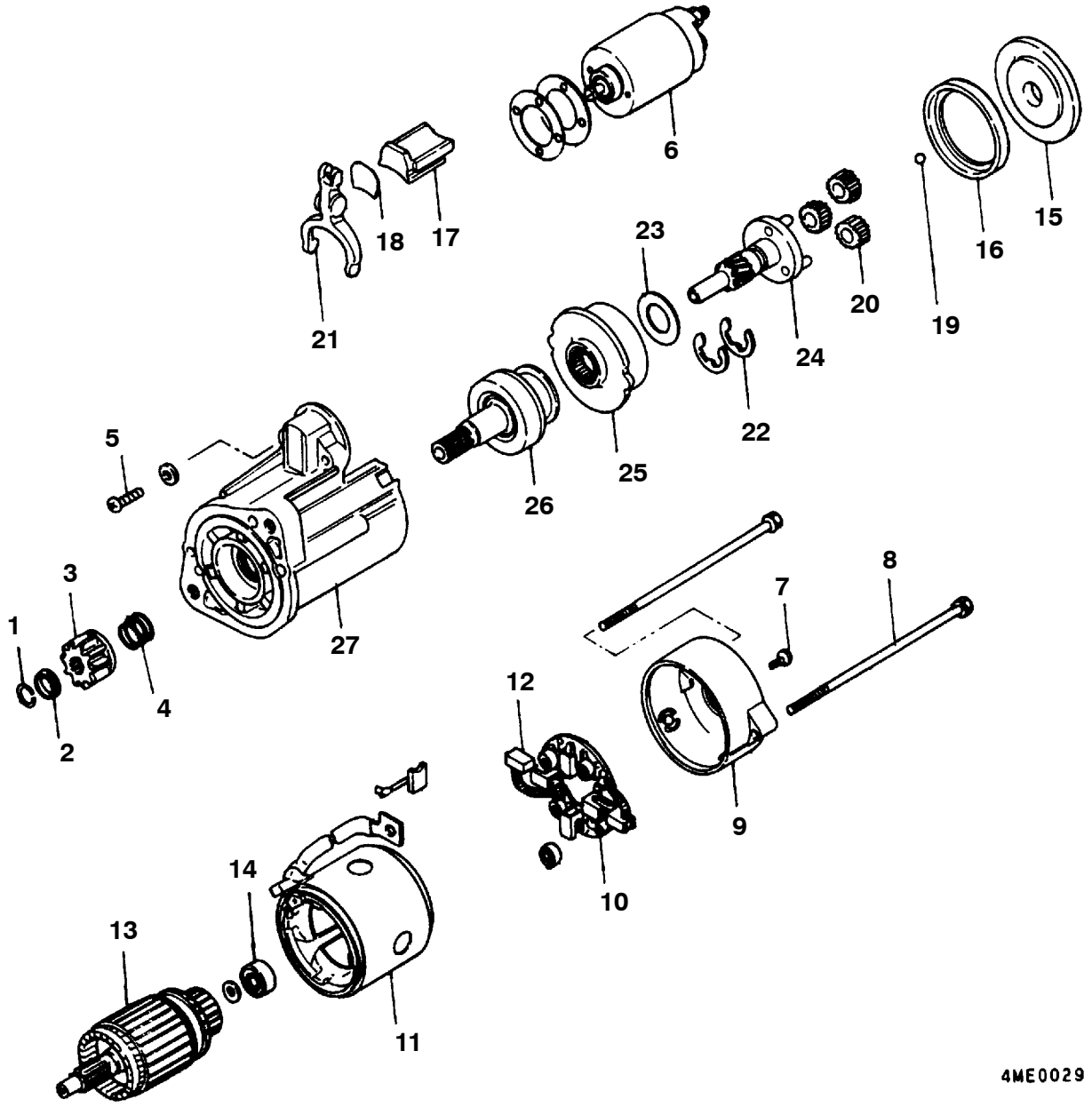


**Disassembly steps**

1. Stopper ring
2. Pinion stopper
◀D▶ ▶B◀ 3. Pinion
4. Spring
5. Screw
6. Magnetic switch
7. Screw
8. Screw
9. Rear bracket
10. Brush holder assembly
◀E▶ 11. Yoke assembly
12. Brush
◀B▶ 13. Armature
14. Rear bearing
15. Cover
16. Rubber packing A
17. Rubber packing B
18. Plate
◀B▶ 19. Ball
20. Planetary gear
21. Lever
22. Washer
23. Washer
24. Gear shaft
25. Internal gear
26. Overrunning clutch
27. Front bracket

Purchased from www.WorkshopManuals.co.uk

www.WorkshopManuals.co.uk

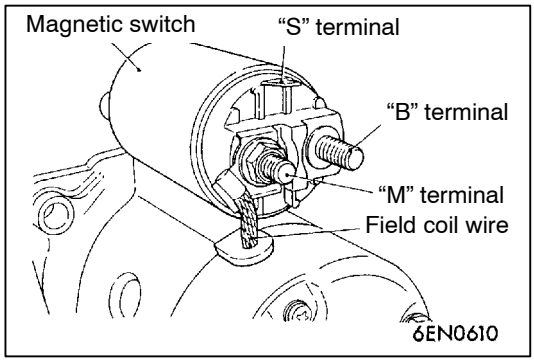


## DISASSEMBLY SERVICE POINTS

### ◀A▶ MAGNETIC SWITCH REMOVAL

Disconnect field coil wire from "M" terminal of magnetic switch.

### ◀B▶ ARMATURE/BALL REMOVAL

**Caution**
**When removing the armature, take care not to lose the ball (which is used as a bearing) in the armature end.**

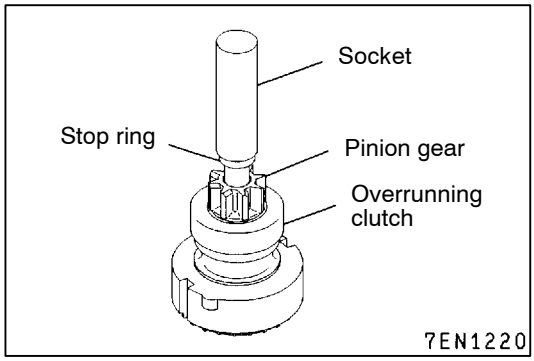


### ◀C▶ SNAP RING/STOP RING REMOVAL

1. Press stop ring off snap ring with a suitable socket.

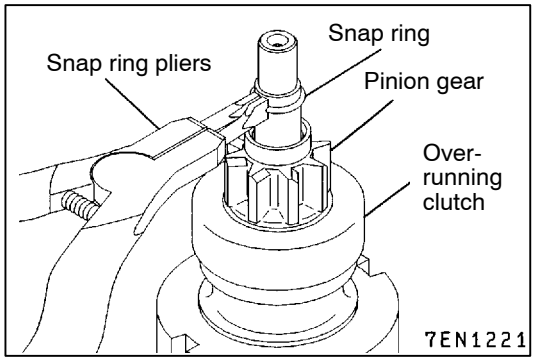


2. Remove snap ring with snap ring pliers and then remove stop ring and overrunning clutch.

Purchased from www.WorkshopManuals.co.uk

www.WorkshopManuals.co.uk

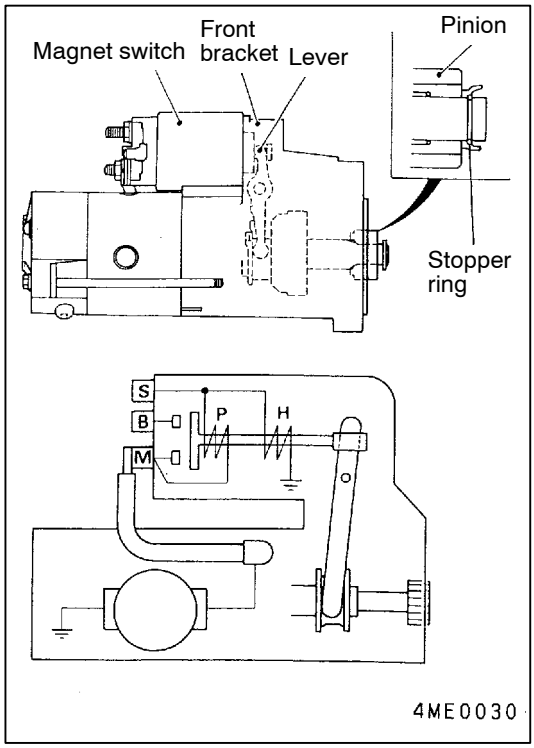


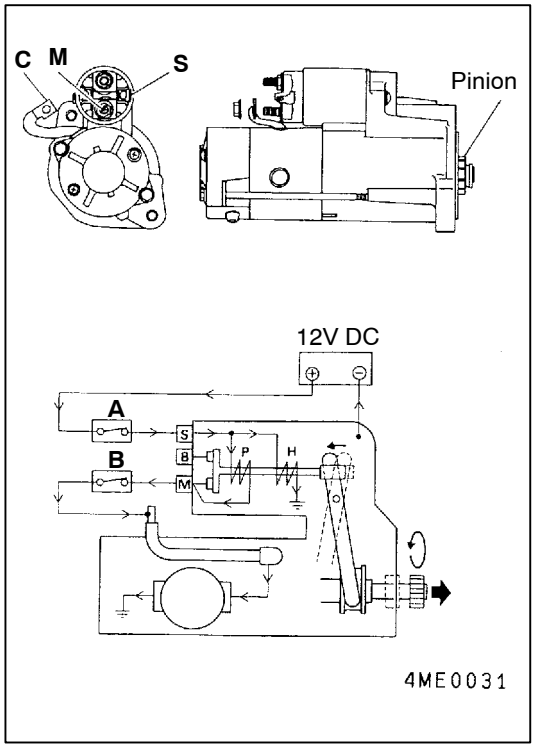


## ◀D▶ PINION REMOVAL <4M4>

Remove the pinion with power supplied to the starter and the pinion in its popped-out position.

**Caution**

1. **When power is supplied to the starter, the pinion pops out and rotates. Keep your hands away from the pinion at this time.**
2. **The magnet switch may be extremely hot after inspection. Be careful not to touch it.**
3. **Do not supply power to the pull-in coil P for more than 10 seconds. Do not supply power to the holding coil H for more than 30 seconds. If these time limits are exceeded, the coil(s) may overheat and burn out.**
4. **The pinion must be popped out electrically by supplying power to the starter. Do not pop out the pinion by pulling the lever since the front bracket and lever may be damaged when the stopper ring is removed.**
5. **When the starter is energized, current of more than 100A flows. Thus, heavy-dury cables (as thick as booster cables) must be used to connect the starter for inspection, and all connections must be securely tightened.**

1. Connect the starter as shown in the illustration. Here,
   A: Switch,
   B: Switch,
   C: Cable,
   M: Starter M terminal,
   S: Starter S terminal.

   NOTE
   The following procedure must be carried out with power supplied to the starter. Thus, the pinion must be removed within 30 seconds of turning ON the power.

2. Supply power to the starter by turning ON switches A and B. The pinion will pop out and rotate.

Purchased from www.WorkshopManuals.co.uk

www.WorkshopManuals.co.uk

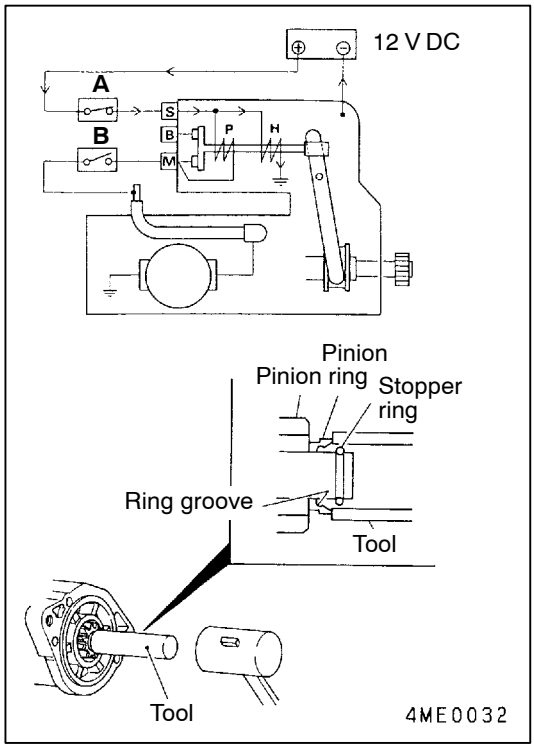


3. Within 5 seconds of the pinion's rotation, turn OFF switch B to stop the pinion from rotating.

   **Caution**
   **With switches A and B turned ON, power is supplied to both the pull-in coil P and holding coil H. No voltage is applied to starter terminal B, so current flows in the pull-in coil while the pinion is rotating. To prevent the pull-in coil from burning out, switch B must therefore be turned OFF within 5 seconds of the pinion's rotation.**

4. Apply a suitable tubular tool to the pinion stopper.
5. Lightly tap the tubular tool with a hammer to remove the stopper ring from the pinion stopper ring groove.
6. Remove the stopper ring and pinion.
7. Turn OFF switch A to cut the supply of power to the starter.

   **Caution**
   **When the starter power is cut, the pinion may pop in, causing the stopper ring to go back into the ring groove. If this occurs, switch ON the starter power and repeat the procedure.**

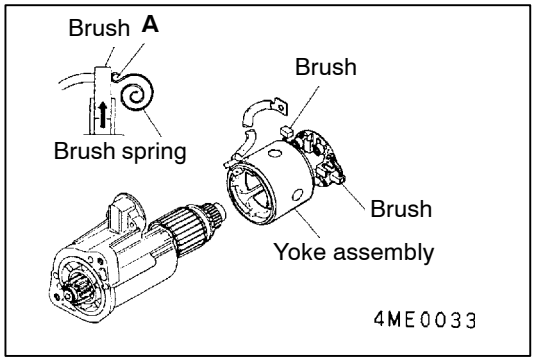


### ◀E▶ YOKE ASSEMBLY REMOVAL <4M4>

1. Pull the brush spring at point A and raise the brush.
2. After raising the brush, hold it in place with the brush spring as shown in the illustration.
3. Remove the yoke assembly.

## STARTER MOTOR PARTS CLEANING

1. Do not immerse parts in cleaning solvent. Immersing the yoke and field coil assembly and/or armature will damage insulation. Wipe motor assembly with a cloth only.
2. Do not immerse drive unit in cleaning solvent. Overrunning clutch is pre-lubricated at the factory and solvent will wash lubrication from clutch.
3. The drive unit may be cleaned with a brush moistened with cleaning solvent and wiped dry with a cloth.

Purchased from www.WorkshopManuals.co.uk

www.WorkshopManuals.co.uk

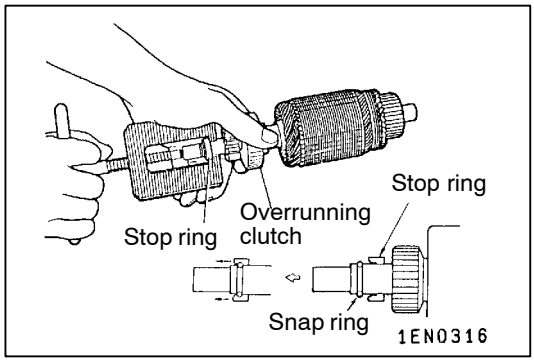


## REASSEMBLY SERVICE POINTS

### ▶A◀ STOP RING/SNAP RING INSTALLATION

Using a suitable pulling tool, pull overrunning clutch stop ring over snap ring.

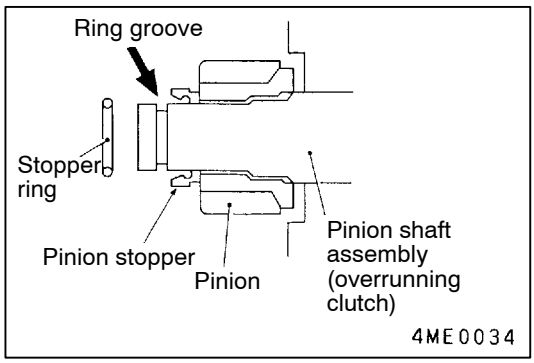


### ▶B◀ PINION INSTALLATION

1. Install the pinion and the pinion stopper in the direction shown in the illustration.
2. Install the stopper ring in the ring groove of the pinion shaft assembly (overrunning clutch).

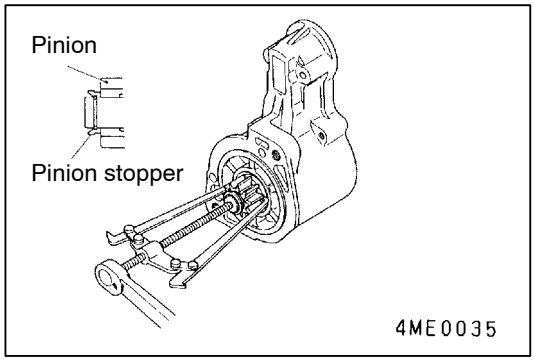


3. Pulling the pinion hard, secure the pinion stopper to the stopper ring.

## INSPECTION

16200130286

### COMMUTATOR CHECK

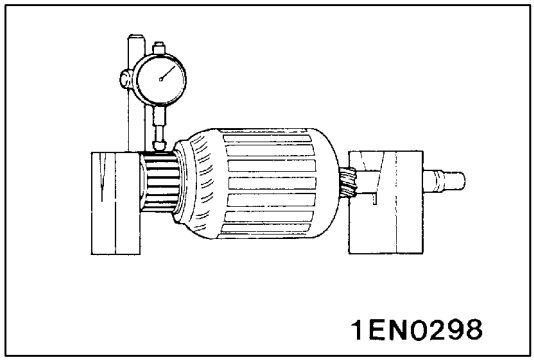


1. Place the armature in a pair of “V” blocks and check the runout with a dial indicator.

   **Standard value: 0.05 mm**

   **Limit: 0.1 mm**

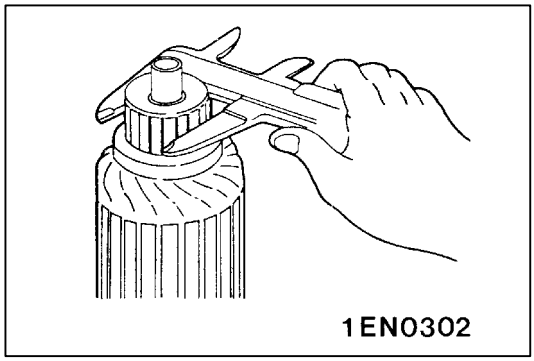


2. Measure the commutator outer diameter.

   **Standard value: 29.4 mm**

   **Limit: 28.8 mm**

Purchased from www.WorkshopManuals.co.uk

www.WorkshopManuals.co.uk

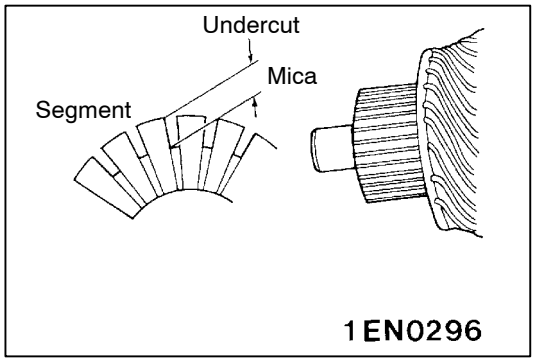


3. Check the undercut depth between segments.
   **Standard value: 0.5 mm**
   **Limit: 0.2 mm**

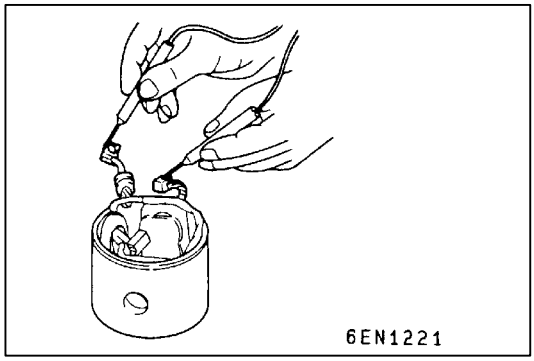


**FIELD COIL OPEN-CIRCUIT TEST <4D5, 4M4>**

Check the continuity between field brushes. If there is continuity, the field coil is in order.

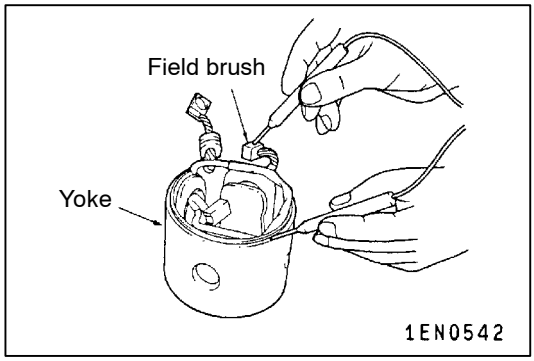


**FIELD COIL GROUND TEST <4D5, 4M4>**

Check the continuity between field coil brush and yoke. If there is no continuity, the field coil is free from earth.

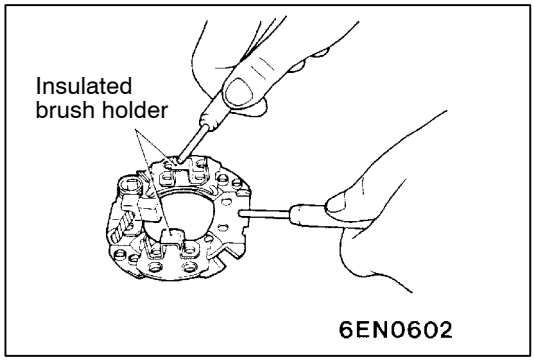


**BRUSH HOLDER CHECK**

Check the continuity between brush holder plate and brush holder.
If there is no continuity, the brush holder is in order.

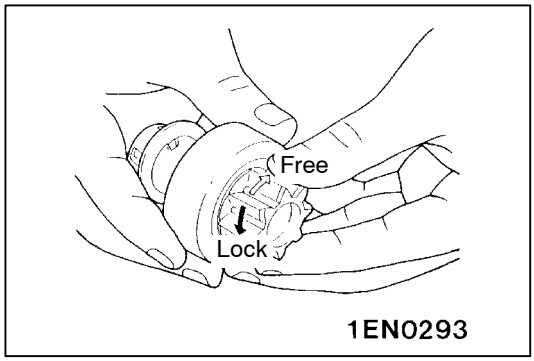


**OVERRUNNING CLUTCH CHECK**

1. While holding clutch housing, rotate the pinion. Drive pinion should rotate smoothly in one direction, but should not rotate in opposite direction. If clutch does not function properly, replace overrunning clutch assembly.
2. Inspect pinion for wear or burrs. If pinion is worn or burred, replace overrunning clutch assembly. If pinion is damaged, also inspect ring gear for wear or burrs.

Purchased from www.WorkshopManuals.co.uk

www.WorkshopManuals.co.uk

### FRONT AND REAR BRACKET BUSHING CHECK

Inspect bushing for wear or burrs. If bushing is worn or burred, replace front bracket assembly or rear bracket assembly.

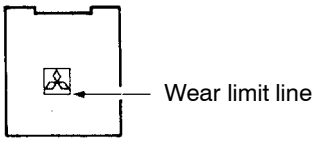


## BRUSH AND SPRING REPLACEMENT

**<6G7>**

1. Brushes that are worn beyond wear limit line, or oil-soaked, should be replaced.
2. When replacing ground brush, slide the brush from brush holder by prying retaining spring back.

**<4D5>**

1. Brushes that are worn beyond wear limit line, or are oil-soaked, should be replaced.
2. When replacing field coil brushes, crush worn brush with pliers, taking care not to damage pigtail.

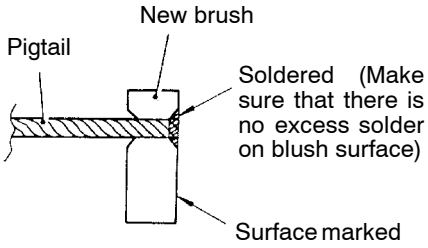


3. Sand pigtail end with sandpaper to ensure good soldering.
4. Insert pigtail into hole provided in new brush and solder it.
   Make sure that pigtail and excess solder do not come out onto brush surface.
5. When replacing ground brush, slide the brush from brush holder by prying retainer spring back.

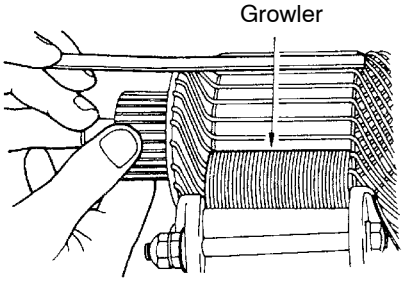


## ARMATURE TEST

### ARMATURE SHORT-CIRCUIT TEST

1. Place armature in a growler.
2. Hold a thin steel blade parallel and just above while rotating armature slowly in growler. A shorted armature will cause blade to vibrate and be attracted to the core. Replace shorted armature.

Purchased from www.WorkshopManuals.co.uk

www.WorkshopManuals.co.uk

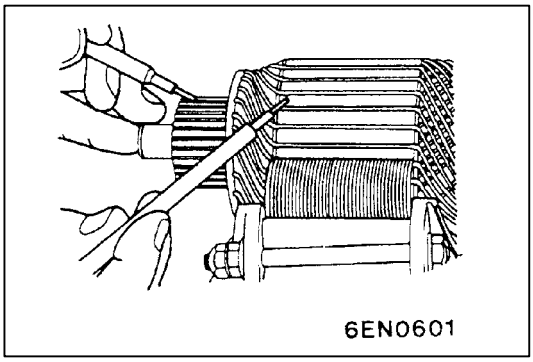


### ARMATURE COIL EARTH TEST

Check the insulation between each commutator segment and armature coil core.
If there is no continuity, the insulation is in order.

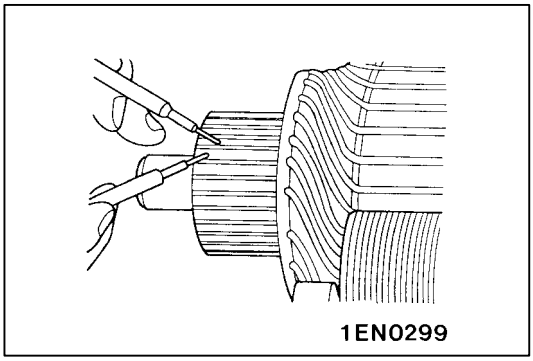


### ARMATURE COIL OPEN-CIRCUIT INSPECTION

Check the continuity between segments. If there is continuity, the coil is in order.

Purchased from www.WorkshopManuals.co.uk

www.WorkshopManuals.co.uk

# IGNITION SYSTEM

## GENERAL INFORMATION

This system is equipped with four ignition coils with built-in power transistors for each of the cylinders. Interruption of the primary current flowing in the primary side of an ignition coil generates a high voltage in the secondary side of the ignition coil. The high voltage thus generated is applied to the spark plugs to generate sparks.
The engine-ECU <M/T> or engine-A/T-ECU <A/T> turns the power transistors inside the ignition coils alternately on and off. This causes the primary currents in the ignition coils to be alternately interrupted and allowed to flow to fire the cylinders in the order 1 - 2 - 3 - 4 - 5 - 6.

The engine-ECU <M/T> or engine-A/T-ECU <A/T> determines which ignition coil should be controlled by means of the signals from the camshaft position sensor and the crank angle sensor. It also detects the crankshaft position, in order to provide ignition at the most appropriate timing in response to the engine operation conditions.
When the engine is cold or running at high altitudes, the ignition timing is slightly advanced to provide optimum performance. Furthermore, if knocking occurs, the ignition timing is gradually retarded until knocking ceases.

### SYSTEM DIAGRAM

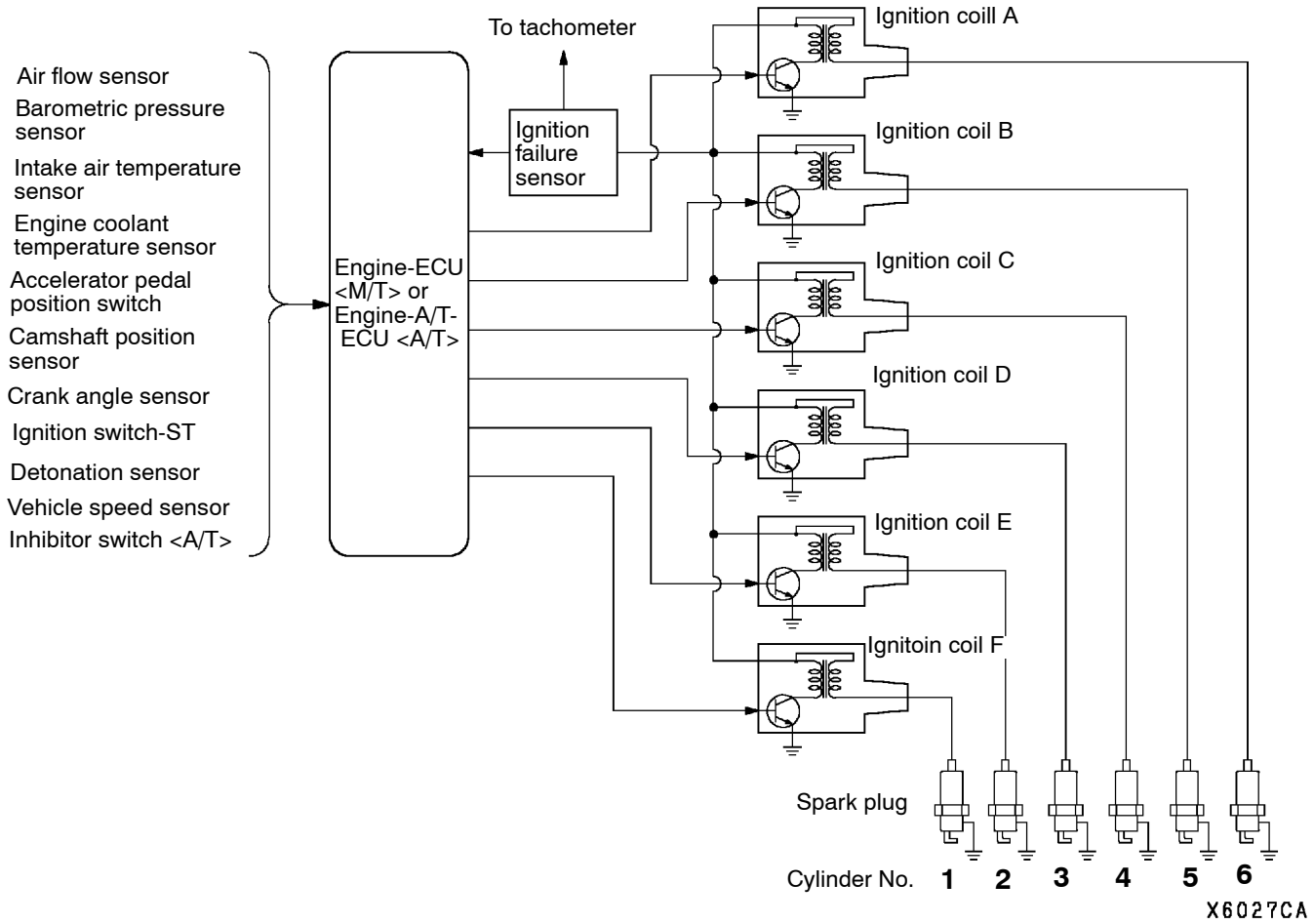


Purchased from www.WorkshopManuals.co.uk

www.WorkshopManuals.co.uk

### IGNITION COIL SPECIFICATION

| Items | Specification |
|---|---|
| Type | Molded 6-coil |

### SPARK PLUG SPECIFICATION

| Items | 6G7 |
|---|---|
| NGK | IZFR5B |

## SERVICE SPECIFICATIONS

### SPARK PLUG

| Items | Standard value | Limit |
|---|---|---|
| Spark plug gap mm | 0.5 - 0.6 | 0.75 |
| Spark plug insulation resistance MΩ | - | 1 |

## SPECIAL TOOL

| Tool | Number | Name | Use |
|---|---|---|---|
| 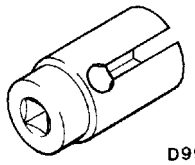  | MD998773 | Detonation sensor wrench | Detonation sensor removal and installation |

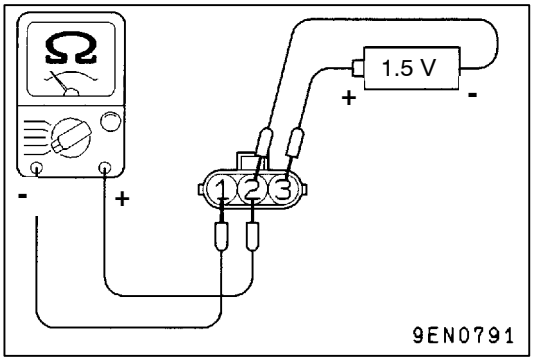


## ON-VEHICLE SERVICE

### IGNITION COIL (WITH BUILT-IN POWER TRANSISTOR) CHECK

#### PRIMARY COIL AND POWER TRANSISTOR CONTINUITY CHECK

NOTE
1. An analogue-type circuit tester should be used.
2. Connect the negative (-) prove of the circuit tester to terminal 1.

**Caution**
**This test must be performed quickly (in less than 10 seconds) to prevent coil from burning and power transistor from breakage.**

Purchased from www.WorkshopManuals.co.uk

www.WorkshopManuals.co.uk

| Voltage: 1.5V | Terminal No. | | |
|---|---|---|---|
| | 1 | 2 | 3 |
| When current is flowing | | ⊖ | ⊕ |
| When current is not flowing | | | |

**SECONDARY COIL CHECK**

NOTE

It is impossible to check the secondary coil through the continuity check as a diode is integrated in the secondary coil circuit of this ignition coil. So, check the secondary coil in the following procedure.

1. Disconnect the ignition coil connector.
2. Remove the ignition coil and install a new spark plug to the ignition coil.
3. Connect the ignition coil connector.
4. Earth the side electrode of the spark plug and crank the engine.
5. Check that spark is produced between the electrodes of the spark plug.
6. If no spark is produced, replace the ignition coil with a new one and recheck.
7. If spark is produced with the new ignition coil, replace the old one as it is faulty. If no spark is produced again, the ignition circuit is suspected as faulty. Check the ignition circuit.

## SPARK PLUG CHECK AND CLEANING

**Caution**

1. **The spark plug gap for iridium plugs should not be adjusted.**
2. **Cleaning iridium plugs may result in damage to the iridium tip. Therefore, if cleaning is necessary because the plug is sooty, use a plug cleaner, and do not clean the plug for more than 20 seconds in order to preserve the electrodes. A wire brush should never be used.**
3. **The spark plugs in GDI engines are special iridium plugs in which the electrodes can become black even when the plugs are working normally. Carbon which may become deposited on these plugs burns off more readily than with conventional plugs, and so should not cause any problems with spark plug performance. Judgement of whether a spark plug is operating normally or not should be made by checking the insulation resistance.**

Purchased from www.WorkshopManuals.co.uk

www.WorkshopManuals.co.uk

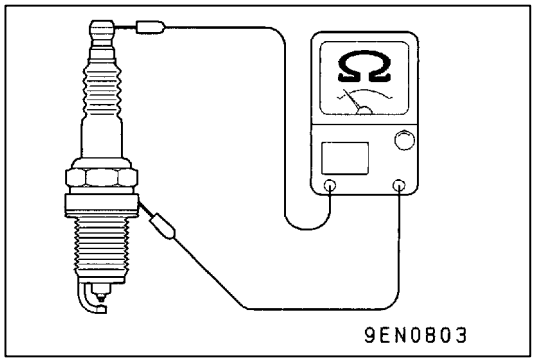


1. Remove the ignition coils.
2. Remove the spark plugs.
3. Check the spark plug gap. Replace the spark plug if the gap exceeds the limit.

   **Limit: 0.75 mm**

   **Standard value: 0.5 - 0.6 mm**
4. Measure the spark plug insulation resistance. Replace the spark plug if the measured value is lower than the limit value.

   **Limit: 1 MΩ**
5. Clean the spark plug holes.
6. Install the spark plugs.
7. Install the ignition coils.

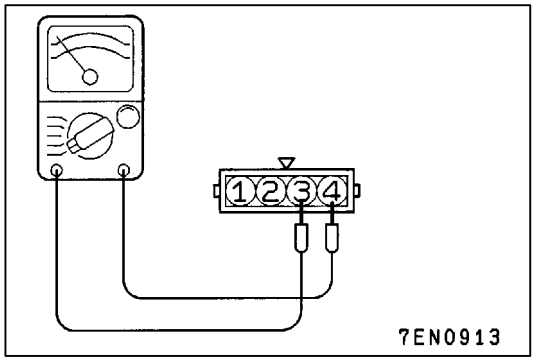


## IGNITION FAILURE SENSOR CHECK

NOTE
An analog-type ohmmeter should be used. Check that the resistance between terminals 3 and 4 is at the standrad value.

**Standard value: 0.1 Ω or less.**

## CAMSHAFT POSITION SENSOR CHECK

Refer to GROUP 13A - Troubleshooting. <6G7>

## CRANK ANGLE SENSOR CHECK

Refer to GROUP 13A - Troubleshooting. <6G7>

## DETONATION SENSOR CHECK

Check the detonation sensor circuit if self-diagnosis code, No. 31 is shown.

NOTE
For information concerning the self-diagnosis codes, refer to GROUP 13A - Troubleshooting. <6G7>

Purchased from www.WorkshopManuals.co.uk

www.WorkshopManuals.co.uk

# IGNITION COIL<6G7>

## REMOVAL AND INSTALLATION

**Pre-removal and Post-installation Operation**
- Engine Cover Removal and Installation
- Air Cleaner Assembly Removal and Installation (Refer to GROUP 15.)

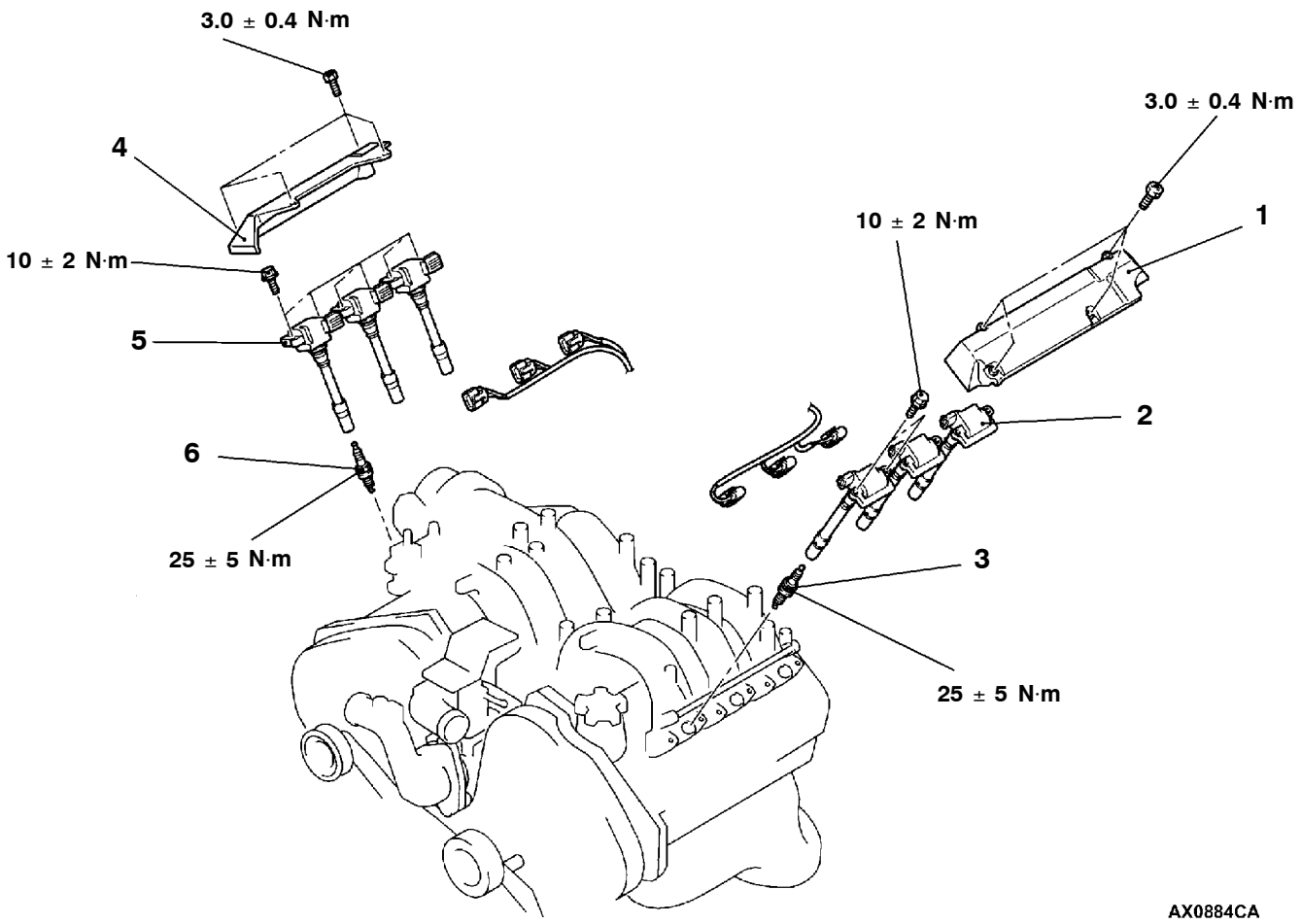


**Removal steps <Left bank>**

1. Center cover, left
2. Ignition coil
3. Spark plug

**Removal steps <Right bank>**

- Throttle body (Refer to GROUP 13A.)

4. Center cover, right
5. Ignition coil
6. Spark plug

Purchased from www.WorkshopManuals.co.uk

www.WorkshopManuals.co.uk

# CRANK ANGLE SENSOR<6G7>

## REMOVAL AND INSTALLATION

**Pre-removal and Post-installation Operation**
Timing Belt Cover Removal and Installation (Refer to GROUP 11.)

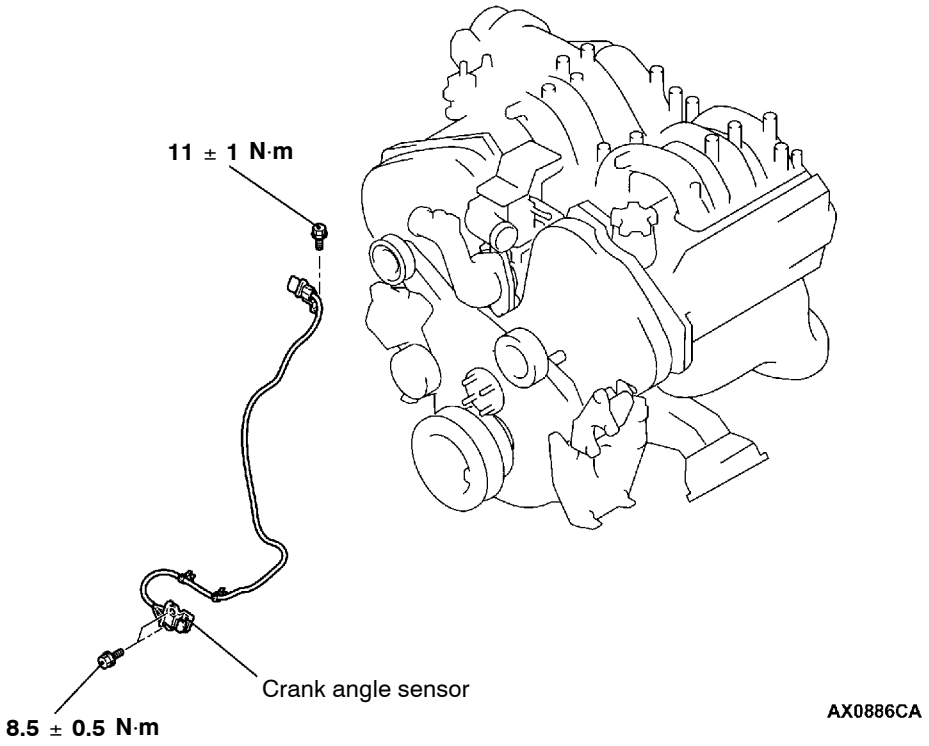


# CAMSHAFT POSITION SENSOR <6G7>

## REMOVAL AND INSTALLATION

**Pre-removal and Post-installation Operation**
Engine Cover Removal and Installation (Refer to GROUP 11.)

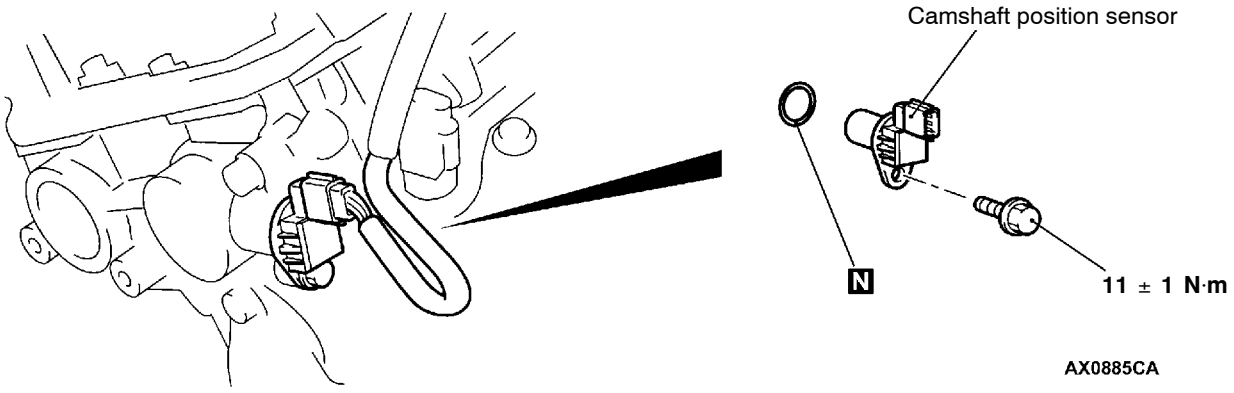


Purchased from www.WorkshopManuals.co.uk

www.WorkshopManuals.co.uk

# DETONATION SENSOR <6G7>

## REMOVAL AND INSTALLATION

**Pre-removal and Post-installation Operation**
Intake Manifold Removal and Installation (Refer to GROUP 15.)

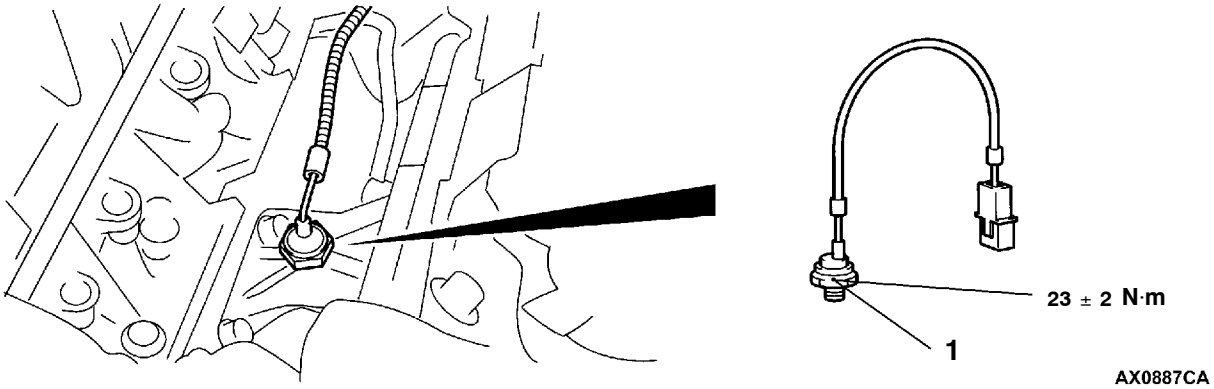


◀A▶ ▶A◀ 1. Detonation sensor

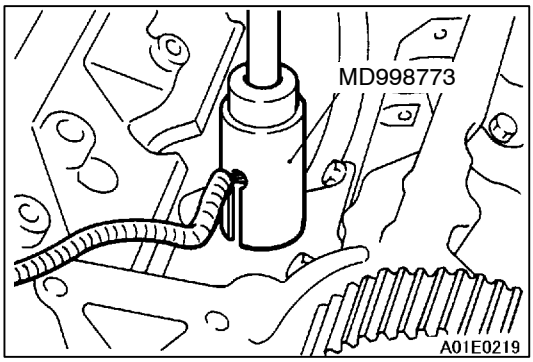


## REMOVAL SERVICE POINT

**◀A▶ DETONATION SENSOR REMOVAL**

## INSTALLATION SERVICE POINT

**▶A◀ DETONATION SENSOR INSTALLATION**

Purchased from www.WorkshopManuals.co.uk

www.WorkshopManuals.co.uk

# GLOW SYSTEM

16400010029

## GENERAL INFORMATION

### SELF-REGULATING GLOW SYSTEM

The self-regulating glow system reduces the time required for starting at low temperatures to provide a degree of starting and operation that is identical to petrol-engine vehicles by preheating the glow plugs at super-quick speed.
The glow control unit controls both the time during which current is supplied to the glow plugs after the ignition switch is turned to the ON position and also the glow indicator lamp illumination time in accordance with the engine coolant temperature. The resistances of the heating coils which are built into the glow plugs increase as the glow plug temperatures become higher. As a result of this, the flow of current gradually decreases, thus stabilizing the glow plug temperature at the specified temperature.

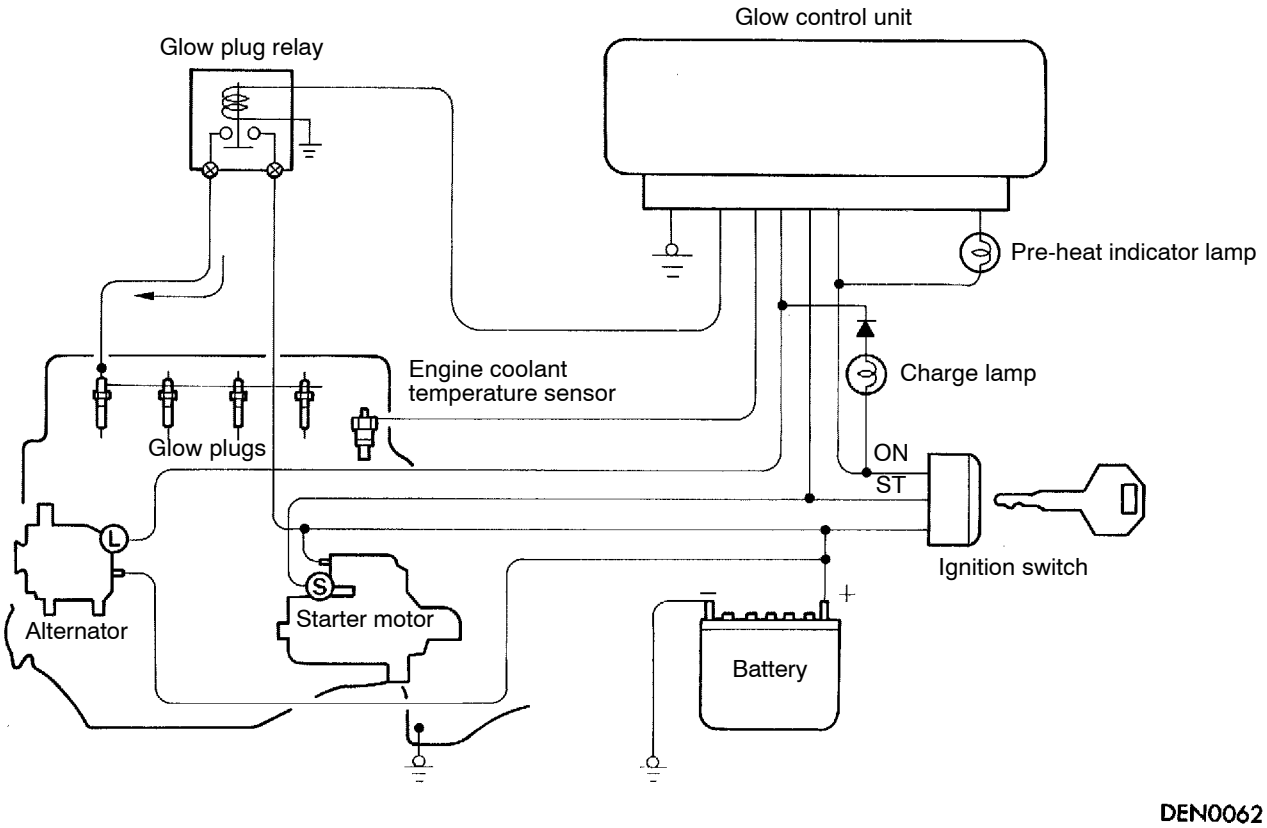


Purchased from www.WorkshopManuals.co.uk

www.WorkshopManuals.co.uk

## SERVICE SPECIFICATIONS

16400030070

| Item | | | Standard value |
|---|---|---|---|
| Resistance between glow plug plate and glow plug body (parallel resistance for 4 glow plugs) (at 20 °C) Ω | | 4D5 | 0.15 - 0.25 |
| | | 4M4 | 0.05 - 0.07 |
| Voltage between glow plug plate and glow plug body V | Immediately after ignition switch is turned to ON (without starting the engine) | 4D5 | 9 - 11 (Drops to 0 V after 4 - 8 seconds have passed) |
| | | 4M4 | 9 - 11 (Drops to 0 V after approx. 8 seconds have passed) |
| | While engine is cranking | | 6 or more |
| | While engine is warming up | | 12 - 15 (Drops to 0 V when the engine coolant temperature increases to 60 °C or more or if 180 seconds have passed since the engine was started) |
| Glow plug resistance (at 20 °C) Ω | 4D5 | | 0.6 - 1.0 |
| | 4M4 | | Approx. 1.1 |

## ON-VEHICLE SERVICE

16400100061

### SELF-REGULATING GLOW SYSTEM CHECK

**<4D5>**

1. Check that the battery voltage is 11 - 13 V.
2. Check that the engine coolant temperature is 40 °C or less.

   NOTE
   If the engine coolant temperature is too high, disconnect the engine coolant temperature sensor connector.

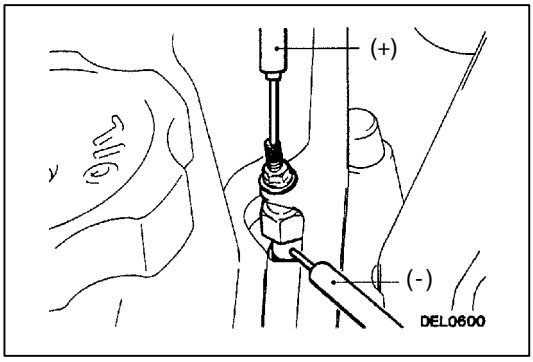


3. Measure the resistance between the glow plug plate and the glow plug body (earth).

   **Standard value: 0.15 - 0.25 Ω (at 20 °C)**

   NOTE
   The resistance value is the parallel resistance value for the four glow plugs.
4. Connect a voltmeter between the glow plug plate and the glow plug body (earth).
5. Measure the voltage immediately after the ignition switch is turned to ON (without starting the engine).

   **Standard value:**
   **9 - 11 V (Drops to 0 V after 4 - 8 seconds have passed)**

   In addition, check to be sure that the glow indicator lamp (red) illuminates immediately after the ignition switch is turned to ON.

   NOTE
   The time during which the voltage appears (energizing time) will depend on the engine coolant temperature.
6. Measure the voltage while the engine is cranking.

Purchased from www.WorkshopManuals.co.uk

www.WorkshopManuals.co.uk

**Standard value: 6 V or more**

7. Start the engine and measure the voltage while the engine is warming up.
   However, if the engine coolant temperature rises above 60 °C or when 180 seconds have passed since the engine was started, the voltage will always return to 0 V. (Refer to the Glow Plug Energization Timing Chart.)

   **Standard value: 12 - 15 V**

**<Reference>**

**Glow Plug Energization Timing Chart**

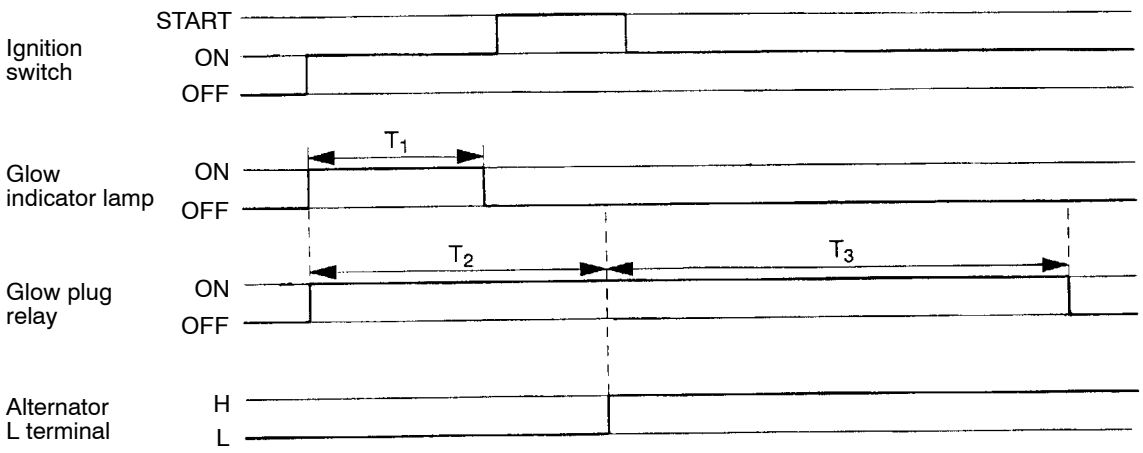


$T_1$: Glow indicator lamp
$T_2$: Glow plug relay drive time after ignition switch is turned ON
$T_3$: Glow plug relay drive time after engine starts (after glow)

DEN0063

NOTE
After glow time $T_3$ becomes longer as the engine coolant temperature drops.

Purchased from www.WorkshopManuals.co.uk

www.WorkshopManuals.co.uk

**<4M4>**

1. Check that the battery voltage is 11 - 13 V.
2. Check that the engine coolant temperature is 40 °C or less.

   NOTE
   If the engine coolant temperature is too high, disconnect the engine coolant temperature sensor connector.

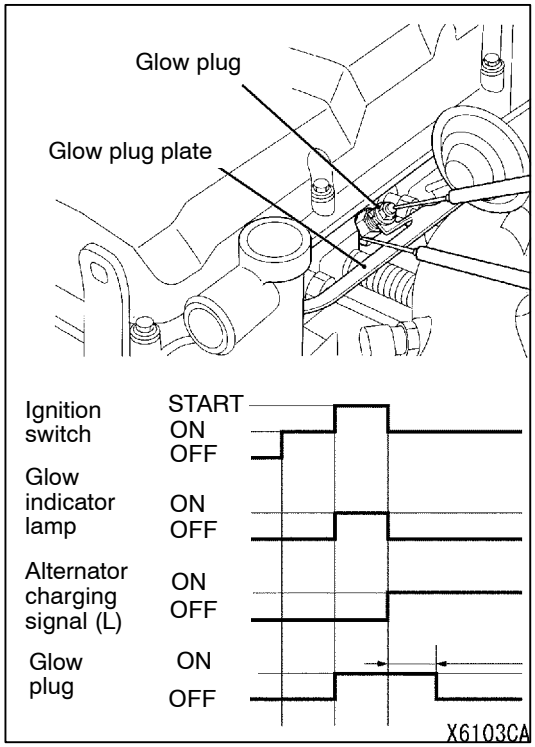


3. Measure the resistance between the glow plug plate and the glow plug body (earth).

   **Standard value: 0.05 - 0.07 Ω (at 20 °C)**

   NOTE
   The resistance value is the parallel resistance value for the four glow plugs.
4. Connect a voltmeter between the glow plug plate and the glow plug body (earth).
5. Measure the voltage immediately after the ignition switch is turned to ON (without starting the engine).

   **Standard value:**
   **9 - 11 V (Drops to 0 V after approx. 8 seconds have passed)**

   In addition, check to be sure that the glow indicator lamp (red) illuminates immediately after the ignition switch is turned to ON.

   NOTE
   The time during which the voltage appears (energizing time) will depend on the engine coolant temperature.
6. Measure the voltage while the engine is cranking.

   **Standard value: 6 V or more**
7. Start the engine and measure the voltage while the engine is warming up.
   However, if the engine coolant temperature rises above 60 °C or when 180 seconds have passed since the engine was started, the voltage will always return to 0 V. (Refer to the Glow Plug Energization Timing Chart.)

   **Standard value: 12 - 15 V**

Purchased from www.WorkshopManuals.co.uk

www.WorkshopManuals.co.uk

## GLOW & EGR-CONTROL UNIT CHECK

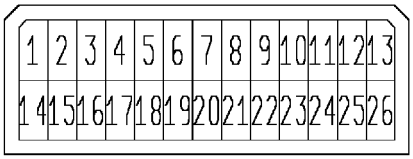


X6206CA

<Measure the voltage at the control unit terminals.>

NOTE
(1) Inspect with the control unit connector connected.
(2) When measuring the voltage, connect the control unit terminal (26) to the earth.

**Terminal Voltage Reference Table**

| Inspection terminal | Inspection item | Inspection condition | | Standard value |
|---|---|---|---|---|
| 5 | Engine coolant temperature sensor (Engine coolant temperature detection) | Ignition switch "OFF" → "ON" | Engine coolant temperature: - 20 °C | 4.3 - 4.5 V |
| | | | Engine coolant temperature: 0 °C | 3.7 - 3.9 V |
| | | | Engine coolant temperature: 20 °C | 2.8 - 3.0 V |
| | | | Engine coolant temperature: 40 °C | 1.9 - 2.1 V |
| | | | Engine coolant temperature: 80 °C | 0.5 - 0.7 V |
| 12 | Ignition switch (power supply) | Ignition switch "LOCK(OFF)" → "START" | | 8 V or more |
| 14 | Glow plug relay (glow time control) | Ignition switch "LOCK(OFF)" → "ON"<br>Engine coolant temperature: 40 °C or less (Pre-glow function inspection) | | 9 - 12 V<br>0 - 0.5 V after approx. 8 sec. (when engine coolant temperature is 20 °C) |
| 17 | Glow indicator lamp | Ignition switch "LOCK(OFF)" → "ON"<br>Engine coolant temperature: 40 °C or less | | 0 - 1 V<br>11 - 13 V after approx. 1 sec. (when engine coolant temperature is 20 °C) |
| 23 | Alternator charging signal ("L" terminal) | Ignition switch "LOCK(OFF)" → "ON" | | 1 - 4 V |
| | | Engine is idling | | 11 V or more |
| 26 | Earth | - | | - |

Harness-side connector

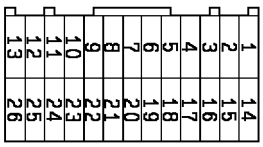


X6105CA

Remove the control unit connector and check the continuity between the harness-side connector terminals.

| Inspection terminal | Inspection item | Continuity (resistance value) |
|---|---|---|
| 14 - 26 | Glow plug relay | Continuity (approx. 20Ω) |

Purchased from www.WorkshopManuals.co.uk

www.WorkshopManuals.co.uk

## ENGINE-ECU CHECK

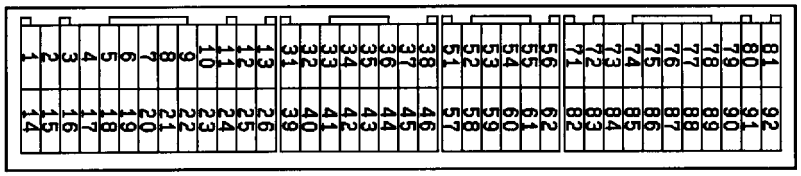

W6106AQ

<Measure the voltage at the control unit terminals.>

NOTE
(1) Inspect with the control unit connector connected.
(2) When measuring the voltage, connect the control unit terminal (26) to the earth.

### Terminal Voltage Reference Table

| Inspection terminal | Inspection item | Inspection condition | | Standard value |
|---|---|---|---|---|
| 83 | Engine coolant temperature sensor (Engine coolant temperature detection) | Ignition switch "LOCK (OFF)" → "ON" | Engine coolant temperature: - 20 °C | 4.3 - 4.5 V |
| | | | Engine coolant temperature: 0 °C | 3.7 - 3.9 V |
| | | | Engine coolant temperature: 20 °C | 2.8 - 3.0 V |
| | | | Engine coolant temperature: 40 °C | 1.9 - 2.1 V |
| | | | Engine coolant temperature: 80 °C | 0.5 - 0.7 V |
| 82 | Ignition switch (power supply) | Ignition switch "LOCK (OFF)" → "START" | | 8 V or more |
| 16 | Glow plug relay (glow time control) | Ignition switch "LOCK (OFF)" → "ON" (Pre-glow function inspection) | | 9 - 12 V<br>0 - 0.5 V after approx. 8 sec. (when engine coolant temperature is 20 °C) |
| | | After starting engine (After-glow function check) | | 12 V<br>0 V approx. 180 sec. (when engine coolant temperature is 20 °C) |
| 4 | Glow indicator lamp | Ignition switch "LOCK (OFF)" → "ON"<br>Engine coolant temperature: 40 °C or less | | 0 - 1 V<br>11 - 13 V after approx. 1 sec. (when engine coolant temperature is 20 °C) |
| 82 | Alternator charging signal ("L" terminal) | Ignition switch "LOCK (OFF)" → "ON" | | 0 V |
| | | Engine is idling | | 11 V or more |
| | Charge lamp | Ignition switch "LOCK (OFF)" → "ON"<br>Immediately after the glow indicator lamp turns off and on. | | 12 V<br>0 V approx. 6 sec. (When engine coolant temperature is 20 °C) |
| 26 | Earth | - | | - |

Purchased from www.WorkshopManuals.co.uk

www.WorkshopManuals.co.uk

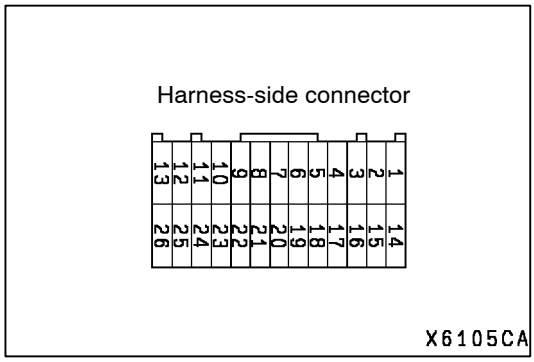


Remove the control unit connector and check the continuity between the harness-side connector terminals.

| Inspection terminal | Inspection item | Continuity (resistance value) |
|---|---|---|
| 13 - 16 | Glow plug relay | Continuity (approx. 3Ω) |

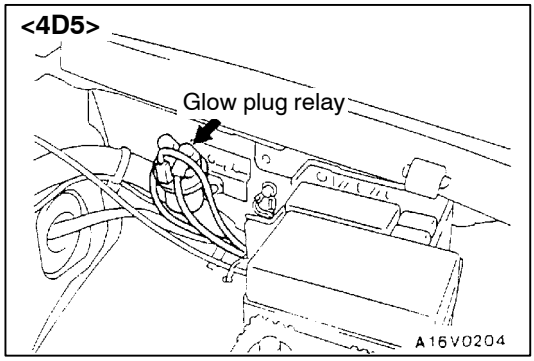


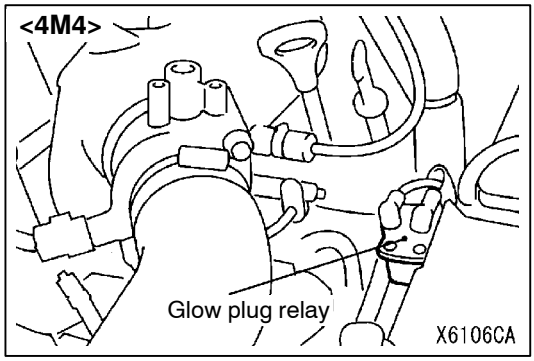


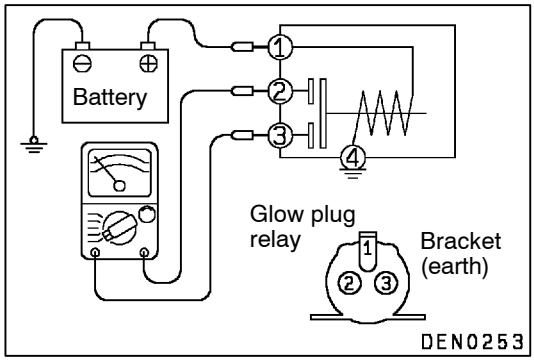


## GLOW PLUG RELAY CHECK

16400250032

1. Check to be sure that there is continuity (approx. 20 Ω) between glow plug relay terminal (1) and the bracket (earth).
2. Use jumper cables to connect terminal (1) of the glow plug relay to the battery (+) terminal and the bracket to the battery (-) terminal

   **Caution**
   **(1) Always be sure to disconnect the harnesses connected to glow plug relay terminals (2) and (3) before using the jumper cables.**
   **(2) The terminals of the disconnected harnesses must not be shorted to earth.**
   **(3) When connecting the jumper cables, be very careful not to make a mistake in connecting the terminals, as this will cause damage to the relay.**
3. Check the continuity between glow plug relay terminals (2) and (3) while disconnecting and connecting the jumper cable at the battery (+) terminal

| Jumper cable at battery (+) terminal | Continuity between terminals (2) - (3) |
|---|---|
| Connected | Continuity (0.01 Ω or less) |
| Disconnected | No continuity (infinite resistance) |

Purchased from www.WorkshopManuals.co.uk

www.WorkshopManuals.co.uk

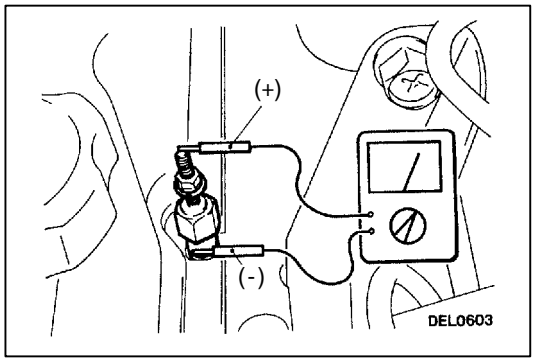


## GLOW PLUG CHECK

16400190082

1. Remove the glow plug plate.
2. Measure the resistance between the glow plug terminals and the body.

   **Standard value:**
   **0.6 - 1.0 Ω (at 20 °C) <4D5>**
   **Approx. 1.1 Ω (at 20 °C) <4M4>**

## ENGINE COOLANT TEMPERATURE SENSOR CHECK

Refer to GROUP 13B - On-vehicle service <4D5> or GROUP 13C - On-vehicle service <4M4>

Purchased from www.WorkshopManuals.co.uk

www.WorkshopManuals.co.uk

# GLOW PLUG

## REMOVAL AND INSTALLATION

**Pre-removal and Post-installation Operation**
EGR Pipe Removal and Installation (Refer to GROUP 17.)

<4M4>

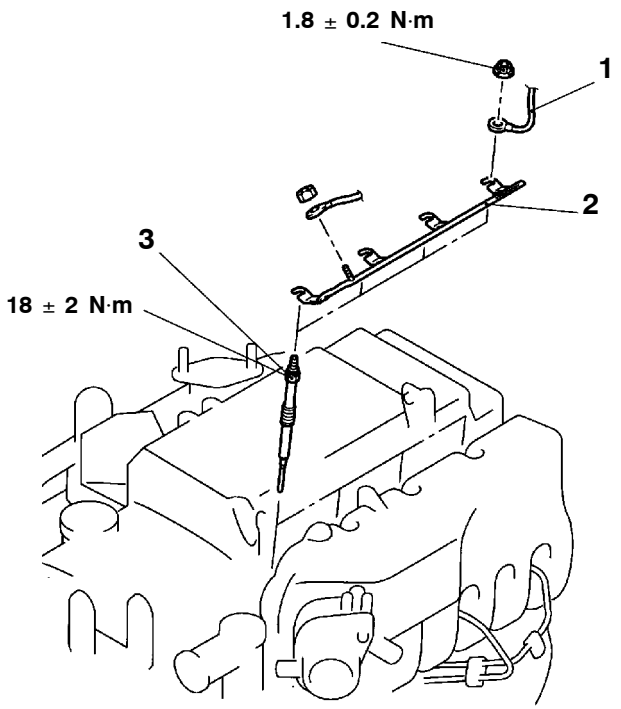


BX0888CA

<4D5>

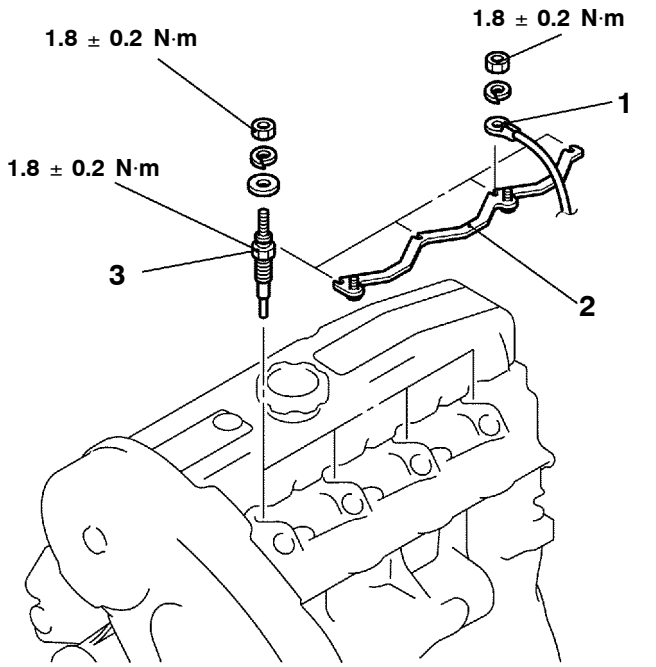


AX1785CA

**Removal steps**

1. Connector connection
2. Glow plug plate
3. Glow plug ◀A▶

## REMOVAL SERVICE POINT

### ◀A▶ GLOW PLUG REMOVAL

The ceramic part of the glow plug can be easily damaged. When removing the glow plug, first loosen the plug with a wrench until the last one thread or more is remained, then remove it with your finger.

**Caution**
**The glow plug, which has been dropped from a height of 10 cm or more, can not be reused.**

Purchased from www.WorkshopManuals.co.uk

www.WorkshopManuals.co.uk

# GROUP 16

# ENGINE ELECTRICAL

## GLOW SYSTEM <4D5-STEP III>

### GENERAL

#### OUTLINE OF CHANGE

Glow system control is now carried out by the engine-ECU to correspond to the adoption of an electronically-controlled fuel injection system.
Refer to GROUP 13E - Troubleshooting for details on measuring the ECU terminal voltage as a result of this.

Purchased from www.WorkshopManuals.co.uk

www.WorkshopManuals.co.uk

# ENGINE AND EMISSION CONTROL

**Click on the applicable bookmark to selected the required model year.**

Purchased from www.WorkshopManuals.co.uk

www.WorkshopManuals.co.uk


# ENGINE AND EMISSION CONTROL

## CONTENTS


**ENGINE CONTROL SYSTEM . . . . . 3**

**GENERAL INFORMATION . . . . . 3**

**SERVICE SPECIFICATIONS . . . . . 3**

**ON-VEHICLE SERVICE . . . . . 3**

Accelerator Cable Check and Adjustment <4D5> . . . . . 3

**ACCELERAOR CABLE AND PADAL . . . . . 4**

**AUTO-CRUISE CONTROL SYSTEM . . 7**

**GENERAL INFORMATION . . . . . 7**

**SPECIAL TOOL . . . . . 8**

**TROUBLESHOOTING . . . . . 9**

**ON-VEHICLE SERVICE . . . . . 27**

Auto-cruise Control Main Switch Check . . . . 27

Auto-cruise Control Switch Check . . . . . 28

Auto-cruise Control Component Check . . . . . 29

**AUTO-CRUISE CONTROL SWITCH . . . . . 30**

**EMISSION CONTROL SYSTEM <6G7> . . . . . 31**

**GENERAL INFORMATION . . . . . 31**

Emission Control Device Reference Table . . . . . 31

**SERVICE SPECIFICATIONS . . . . . 32**

**SPECIAL TOOL . . . . . 32**

**VACUUM HOSE . . . . . 32**

Vacuum Hose Piping Diagram . . . . . 32

Vacuum Circuit Diagram . . . . . 33

Vacuum Hose Check . . . . . 33

Vacuum Hose Installation . . . . . 33

**CRANKCASE EMISSION CONTROL SYSTEM . . . . . 34**

General Information . . . . . 34

System Diagram . . . . . 34

Component Location . . . . . 34

Positive Crankcase Ventilation System Check . . . . . 35

PCV Valve Check . . . . . 35


**CONTINUED ON NEXT PAGE**

Purchased from www.WorkshopManuals.co.uk

www.WorkshopManuals.co.uk

**EVAPORATIVE EMISSION CONTROL SYSTEM . . . . . 36**
General Information . . . . . 36
System Diagram . . . . . 36
Component Location . . . . . 36
Purge Control System Check . . . . . 37
Purge Port Vacuum Check . . . . . 37
Purge Control Solenoid Valve Check . . . . . 38

**EXHAUST GAS RECIRCULATION (EGR) SYSTEM . . . . . 39**
General Information . . . . . 39
Operation . . . . . 39
System Diagram . . . . . 39
Component Location . . . . . 39
Exhaust Gas Recirculation (EGR) Control System Check . . . . . 40
EGR Valve (Stepper Motor) Check . . . . . 40

**EGR VALVE . . . . . 42**

**CANISTER . . . . . 43**

**CATALYTIC CONVERTER . . . . . 44**
General Information . . . . . 44

**EMISSION CONTROL SYSTEM <4D5> . . . . . 45**

**GENERAL INFORMATION . . . . . 45**

**SERVICE SPECIFICATIONS . . . . . 45**

**SEALANT . . . . . 45**

**SPECIAL TOOL . . . . . 45**

**EXHAUST GAS RECIRCULATION (EGR) SYSTEM . . . . . 46**
General Information . . . . . 46
System Diagram . . . . . 46
Component Location . . . . . 46
Function Check . . . . . 47
EGR Solenoid Valve Operation Check . . . . . 47
EGR Solenoid Valve Resistance Check . . . . 48
Lever Position Sensor (LPS) Adjustment . . . 48
Engine Speed Sensor Check . . . . . 49
Engine Coolant Temperature Sensor Check . . . . . 49

**CHECK AT THE GLOW & EGR CONTROL UNIT . . . . . 51**

**EMISSION CONTROL SYSTEM <4M4-VEHICLES WITH EGR> . . . . . 52**

**GENERAL INFORMATION . . . . . 52**

**SERVICE SPECIFICATIONS . . . . . 52**

**EXHAUST GAS RECIRCULATION (EGR) SYSTEM . . . . . 53**
General Information . . . . . 53
System Diagram . . . . . 53
Component Location . . . . . 53
Function Check . . . . . 54
EGR Solenoid Valve Operation Check . . . . . 54
EGR Solenoid Valve Resistance Check . . . . 55
Accelerator Pedal Position Sensor (APS), Engine Coolant Temperature Sensor, Intake Air Temperature Sensor, Fuel Temperature Sensor Check . . . . . 55
Check at Engine-ECU . . . . . 55

**CATALYTIC CONVERTER . . . . . 55**
General Information . . . . . 55

Purchased from www.WorkshopManuals.co.uk

www.WorkshopManuals.co.uk

# ENGINE CONTROL SYSTEM

## GENERAL INFORMATION

On vehicles with 6G7 and 4M4 engines, an electronic-controlled throttle valve system has been used instead of a conventional cable-type accelerator mechanism.
On 4D5 engine, a cable-type accelerator mechanism and a suspended-type pedal have been used.

## SERVICE SPECIFICATIONS

| Items | | Standard value |
|---|---|---|
| Accelerator cable play mm | | 1 - 2 |
| Engine idle speed r/min | 4D5 | 750 ± 100 |

## ON-VEHICLE SERVICE

### ACCELERATOR CABLE CHECK AND ADJUSTMENT <4D5>

1. Turn A/C and lamps OFF.
   Inspect and adjust at no load.
2. Warm engine until stabilized at idle.
3. Confirm idle speed is at prescribed value.

   **Standard value: 750 ± 100 r/min**

4. Stop engine (ignition switch OFF).
5. Confirm there are no sharp bends in accelerator cable.
6. Check inner cable for correct slack.

   **Standard value: 1 - 2 mm**

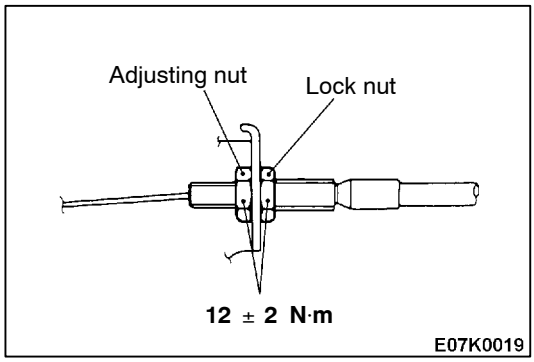


7. If there is too much slack or no slack, adjust play by the following procedures.
   (1) Loosen the lock nut and fully close the throttle lever.
   (2) Tighten the adjusting nut until immediately before the throttle lever starts to move.
   (3) By loosening the adjusting nut one turn, the accelerator cable play will be brought to the standard value.
   (4) Fix the adjusting nut with the lock nut.
   (5) After adjusting, check that the throttle lever is touching the stopper.

Purchased from www.WorkshopManuals.co.uk

www.WorkshopManuals.co.uk

# ACCELERATOR CABLE AND PEDAL

## REMOVAL AND INSTALLATION

**<6G7, 4M4>**

**Post-installation Operation**
Check and Adjustment of the Accelerator Pedal Position Sensor (Refer to GROUP 13A, C - On-vehicle Service.)

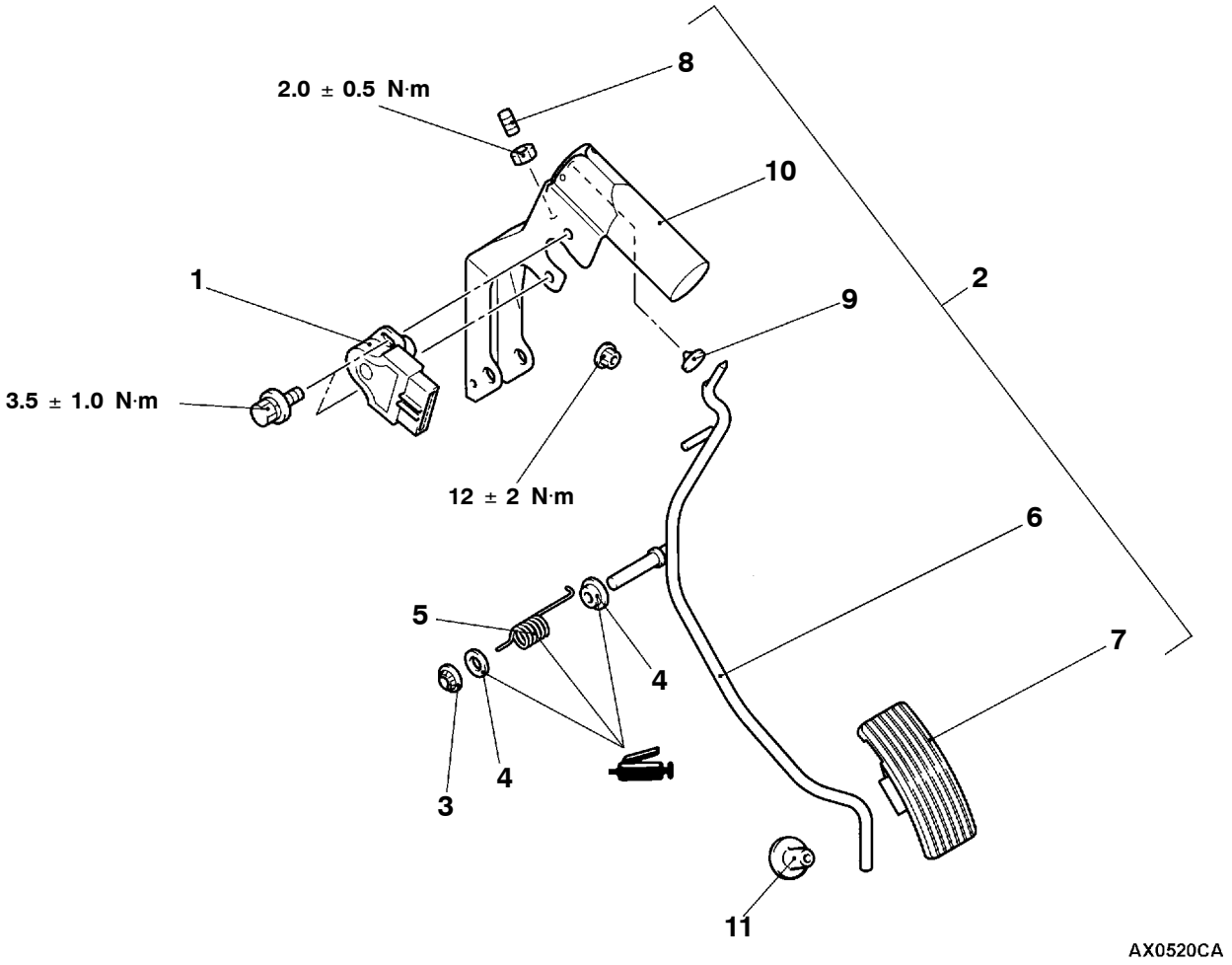


**Removal steps**

1. Accelerator pedal position sensor
2. Accelerator pedal assembly
3. Push-on spring nut
4. Bushing
5. Return spring
6. Accelerator pedal
7. Accelerator pedal pad
8. Adjusting screw
9. Stopper
10. Accelerator pedal bracket
11. Stopper <R.H. drive vehicles-M/T>

Purchased from www.WorkshopManuals.co.uk

www.WorkshopManuals.co.uk

<4D5>

**Post-installation Operation**
Adjusting the Accelerator Cable (Refer to P.17-3.)

<L.H. drive vehicles>

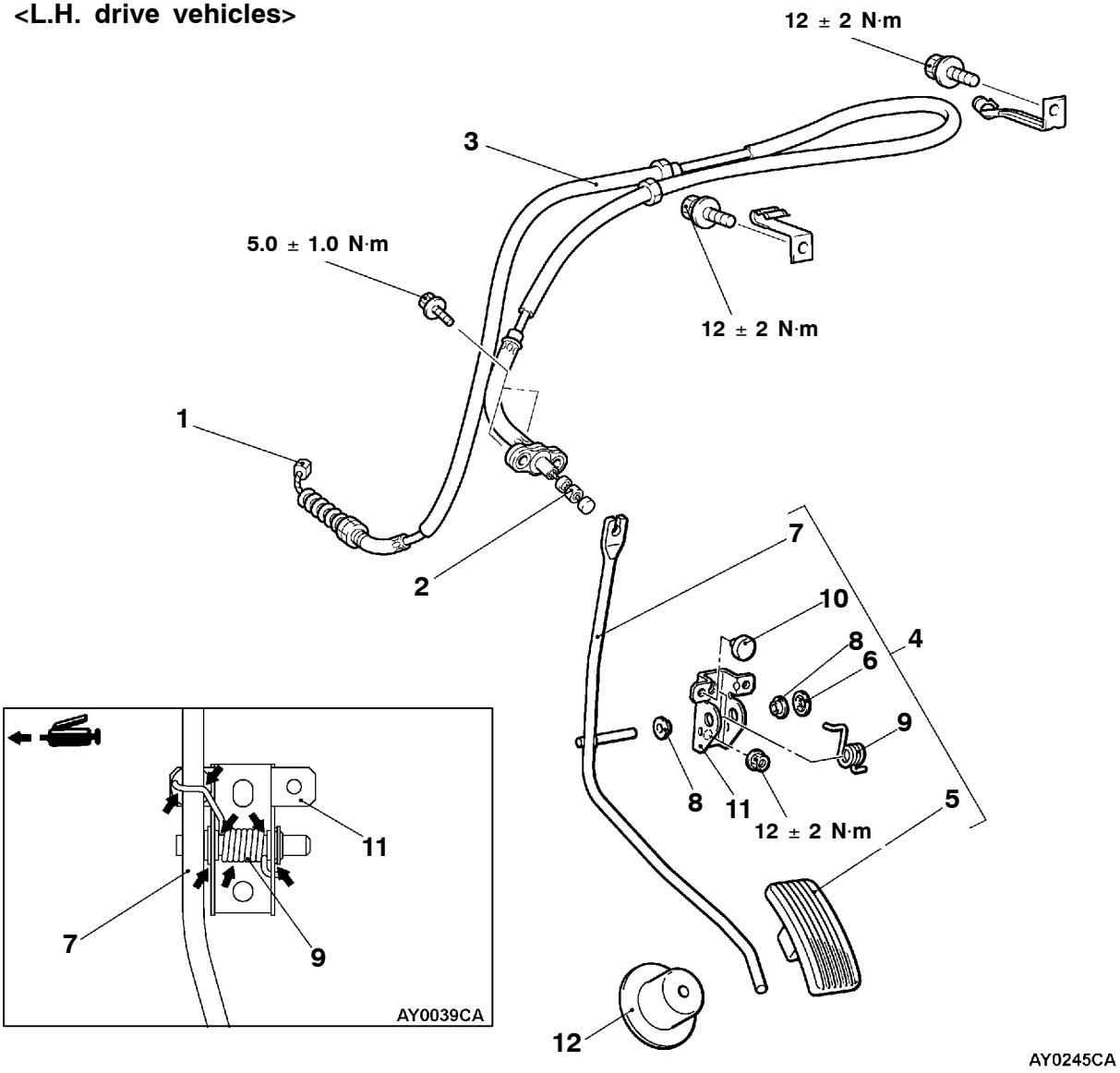


**Removal steps**

1. Inner cable connection (Throttle body side)
2. Inner cable connection (Accelerator pedal side)
3. Accelerator cable
4. Accelerator pedal assembly
5. Accelerator pedal pad
6. Push-on spring nut
7. Accelerator arm
8. Bushing
9. Spring
10. Stopper
11. Accelerator pedal bracket
12. Accelerator pedal stopper

Purchased from www.WorkshopManuals.co.uk

www.WorkshopManuals.co.uk

<R.H. drive vehicles>

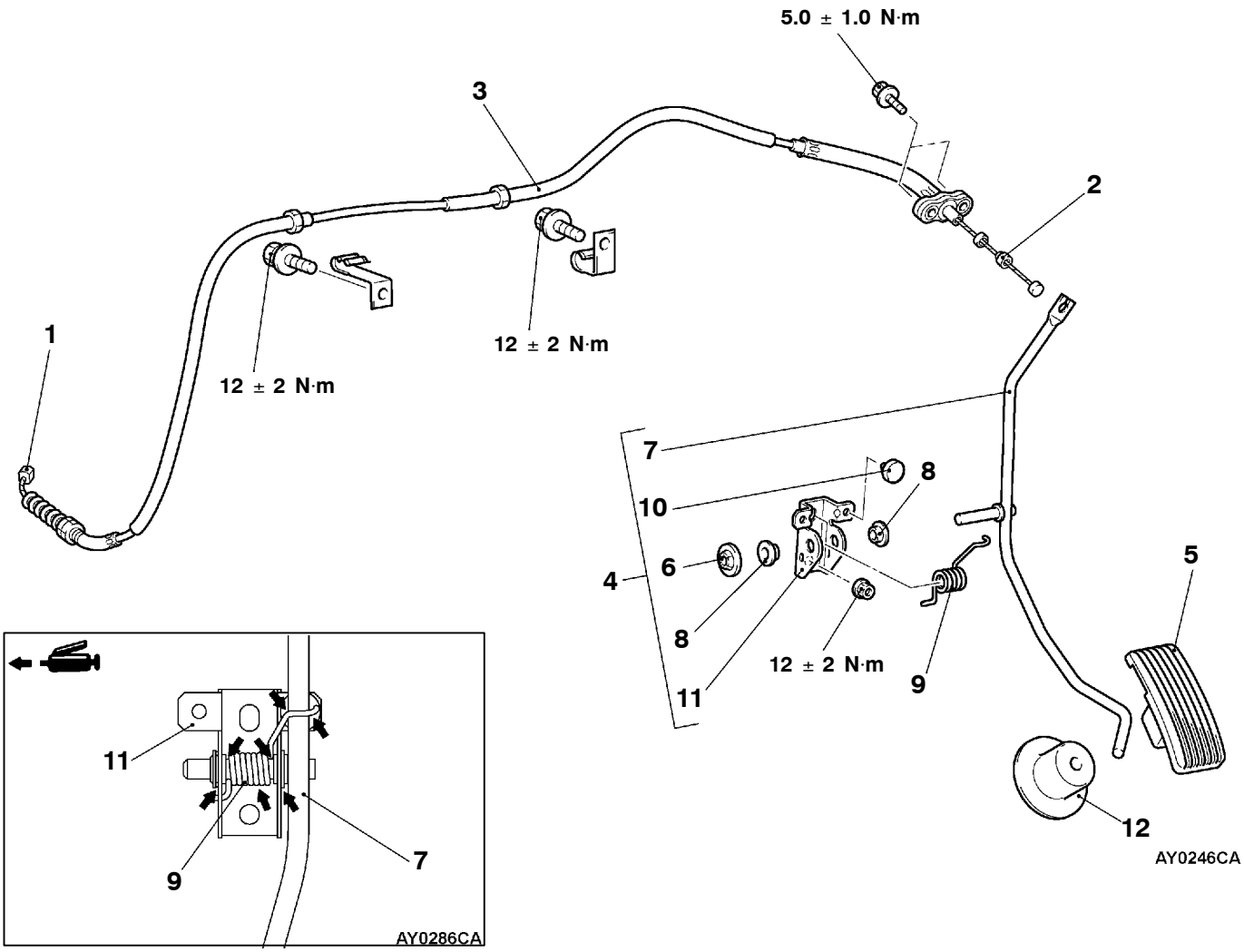


**Removal steps**

1. Inner cable connection (Throttle body side)
2. Inner cable connection (Accelerator pedal side)
3. Accelerator cable
4. Accelerator pedal assembly
5. Accelerator pedal pad
6. Push-on spring nut
7. Accelerator arm
8. Bushing
9. Spring
10. Stopper
11. Accelerator pedal bracket
12. Accelerator pedal stopper

Purchased from www.WorkshopManuals.co.uk

www.WorkshopManuals.co.uk

# AUTO-CRUISE CONTROL SYSTEM

## GENERAL INFORMATION

By using the auto-cruise control, the driver can drive at the speed he/she likes (in a range of approximately 40 - 200 km/h) without depressing the accelerator pedal.

**<6G7>**

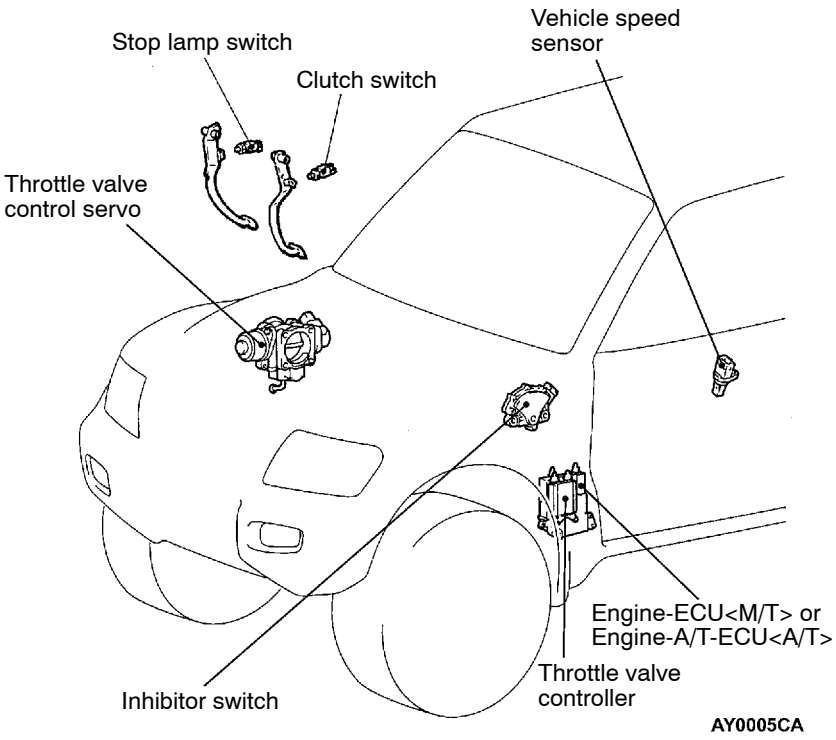


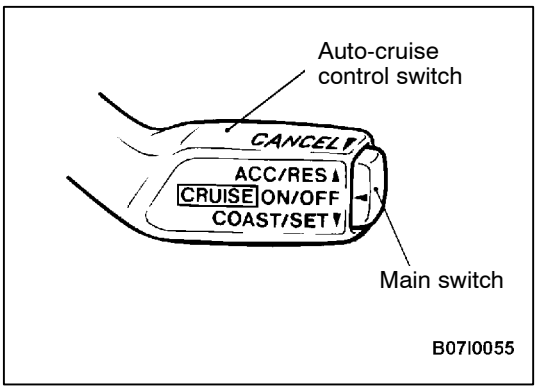


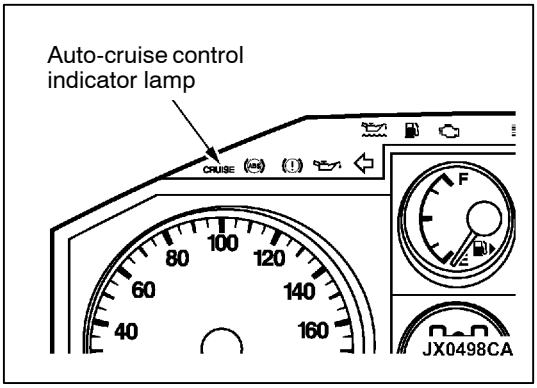


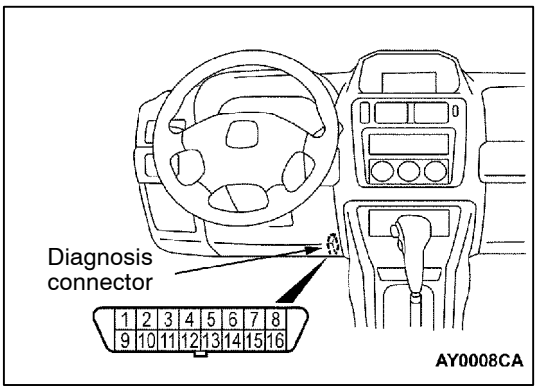


Purchased from www.WorkshopManuals.co.uk

www.WorkshopManuals.co.uk

<4M4>

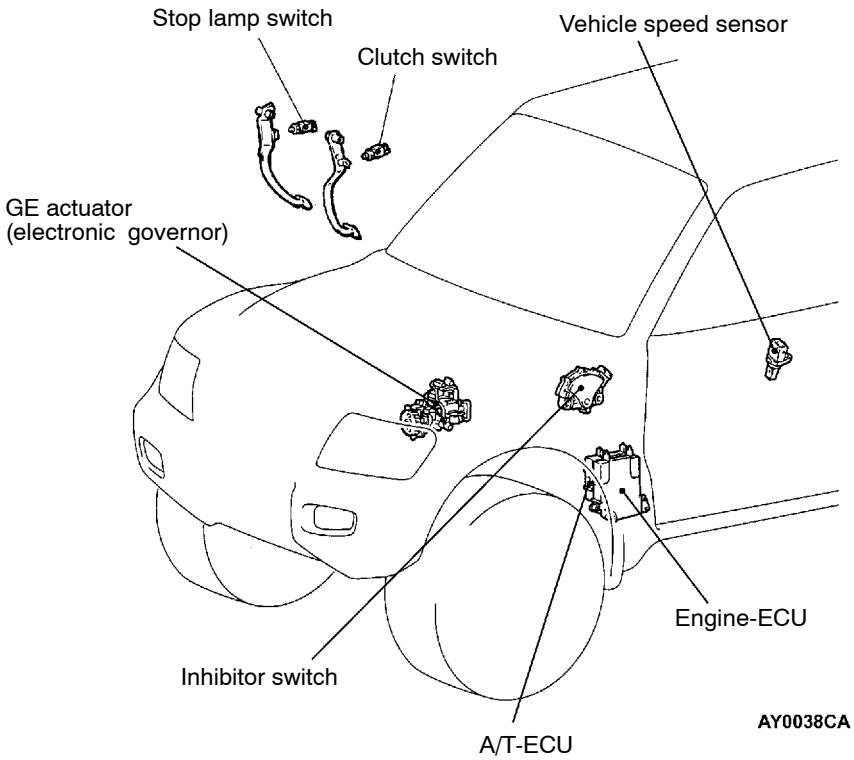


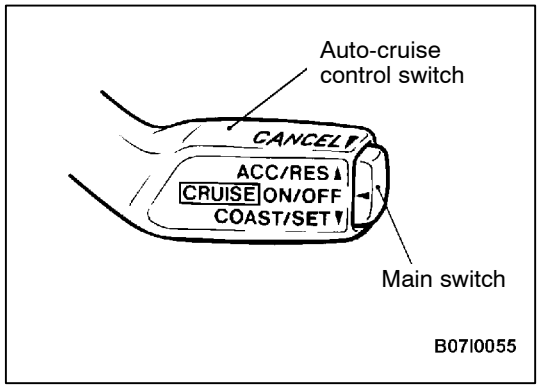


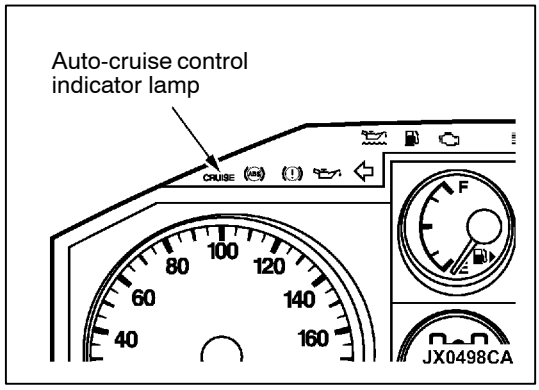


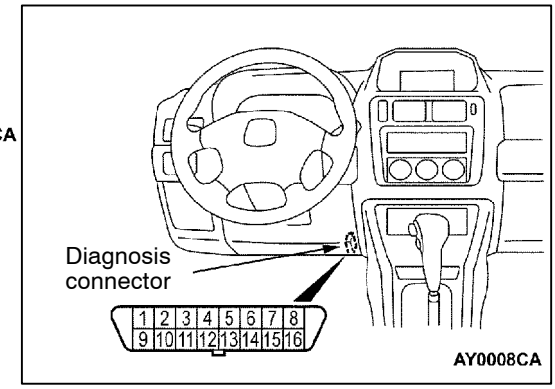


## SPECIAL TOOL

| Tool | Number | Name | Use |
|---|---|---|---|
| 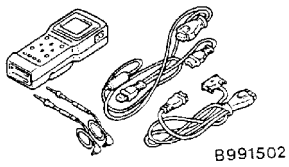  | MB991502 | MUT-II sub assembly | • Reading diagnosis codes<br>• Auto-cruise control system check |

Purchased from www.WorkshopManuals.co.uk

www.WorkshopManuals.co.uk

# TROUBLESHOOTING

## STANDARD FLOW OF DIAGNOSIS TROUBLESHOOTING

Refer to GROUP 00 - How to Use Troubleshooting/Inspection Service Points.

NOTE
Check that the vacuum hose is connected correctly and is not damaged, and then carry out the diagnosis.

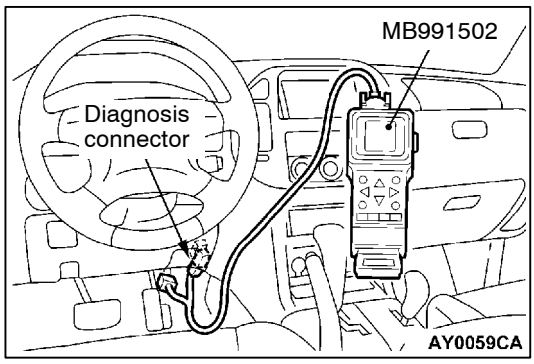


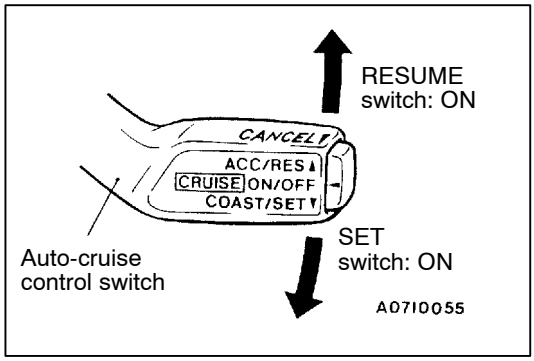


## DIAGNOSIS FUNCTION

### METHOD OF READING THE DIAGNOSIS CODES

**Using the MUT-II**

1. Connect the MUT-II to the diagnosis connector (16-pin) under the instrument under cover.
2. With the ignition switch in the ON position, take a reading of the diagnosis codes.

**Caution**
**Turn off the ignition switch before connecting or disconnecting the MUT-II.**

**Using a Auto-cruise Control Indicator Lamp**

1. Turn the ignition switch ON with the SET switch on. Then, turn the RESUME switch ON within 1 second.
2. Read a diagnosis code by observing the flash display pattern of the auto-cruise control indicator lamp in the combination meter.

### Indication of diagnosis code by auto-cruise control indicator lamp

| When the diagnosis code No.23 is output | When no diagnosis code is output |
|---|---|
| 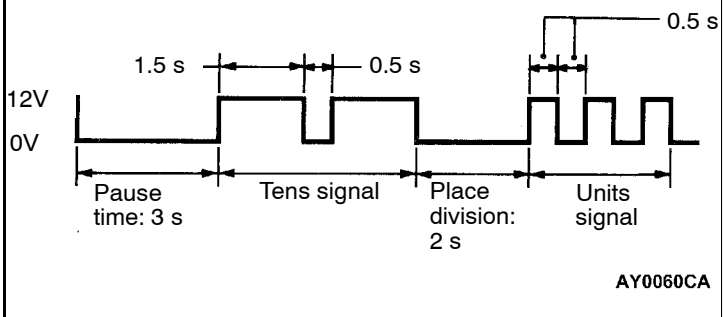 | 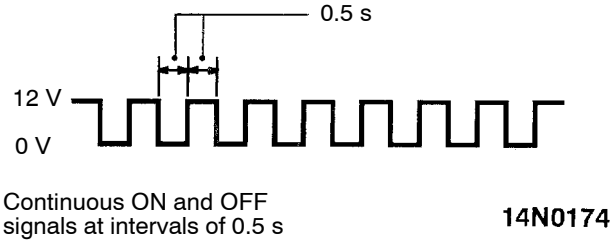 |





NOTE
Other on-board diagnostic items are also output as voltage waveforms corresponding to diagnosis code numbers.

Purchased from www.WorkshopManuals.co.uk

www.WorkshopManuals.co.uk

## METHOD OF ERASING THE DIAGNOSIS CODES

Refer to GROUP 00 - How to Use Troubleshooting/Inspection Service Points.

## INSPECTION CHART FOR DIAGNOSIS CODES <6G7>

| Code No. | Diagnosis item | Reference page |
|---|---|---|
| 15 | Auto-cruise control switch system | 17-10 |
| 21 | Cancel latch signal system | 17-11 |
| 22 | Stop lamp switch system | 17-11 |
| 23 | Engine-ECU <M/T> or engine-A/T-ECU <A/T> system | 17-12 |

## INSPECTION PROCEDURE FOR DIAGNOSIS CODES <6G7>

| Code No. 15 Auto-cruise control switch system | Probable cause |
|---|---|
| This diagnosis code is output if the RESUME and SET switches of the auto-cruise control switch remain on. | • Malfunction of the auto-cruise control switch<br>• Malfunction of the connector<br>• Malfunction of the harness<br>• Malfunction of the throttle valve controller |

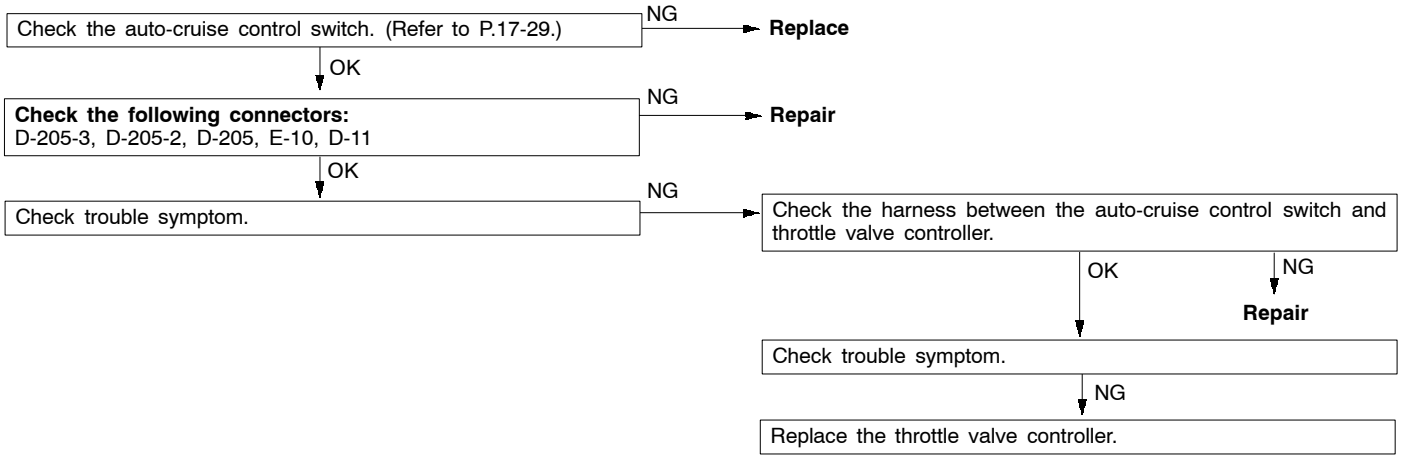


Purchased from www.WorkshopManuals.co.uk

www.WorkshopManuals.co.uk

| Code No. 21 Cancel latch signal system | Probable cause |
|---|---|
| The throttle valve controller and engine-ECU <M/T> or engine-A/T-ECU <A/T> send a cancel holding information to the engine-ECU <M/T> or engine-A/T-ECU <A/T> via a cancel latch signal line and the serial communication line.<br>This diagnosis code is output if there is a failure in the cancel latch signal line, or a disaccord in the communication data. | • Malfunction of the connector<br>• Malfunction of the harness<br>• Malfunction of the throttle valve controller<br>• Malfunction of the engine-ECU <M/T><br>• Malfunction of the engine-A/T-ECU <A/T> |

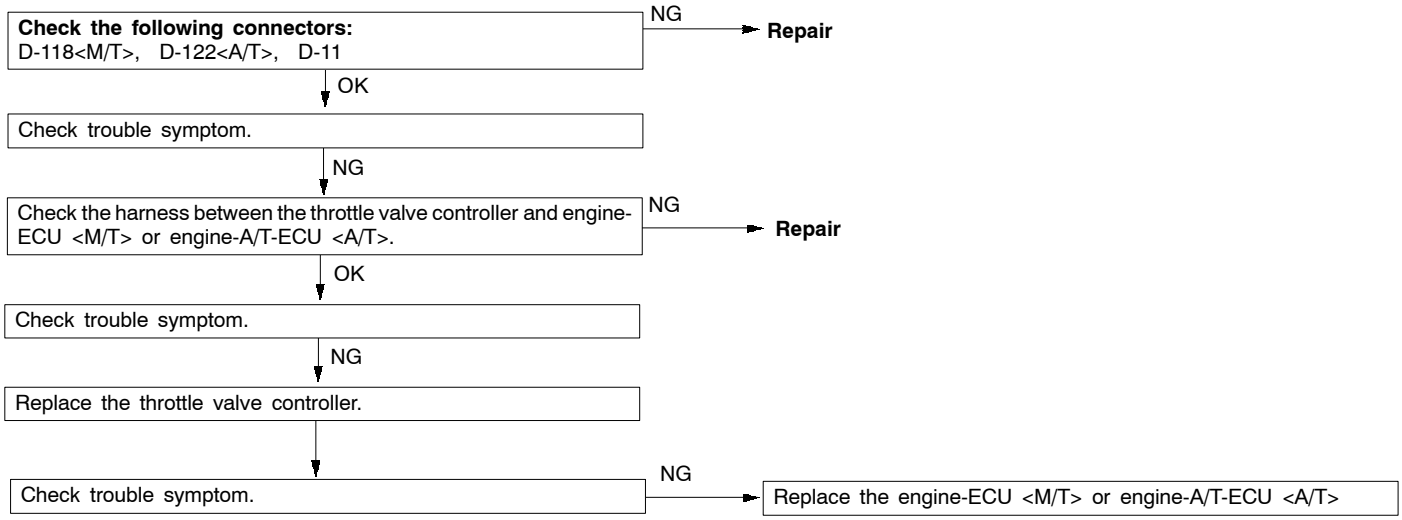


| Code No. 22 Stop lamp switch system | Probable cause |
|---|---|
| This diagnosis code is output when the throttle valve controller detects a failure in the stop lamp switch output. | • Malfunction of the stop lamp switch<br>• Malfunction of the connector<br>• Malfunction of the harness<br>• Malfunction of the throttle valve controller |

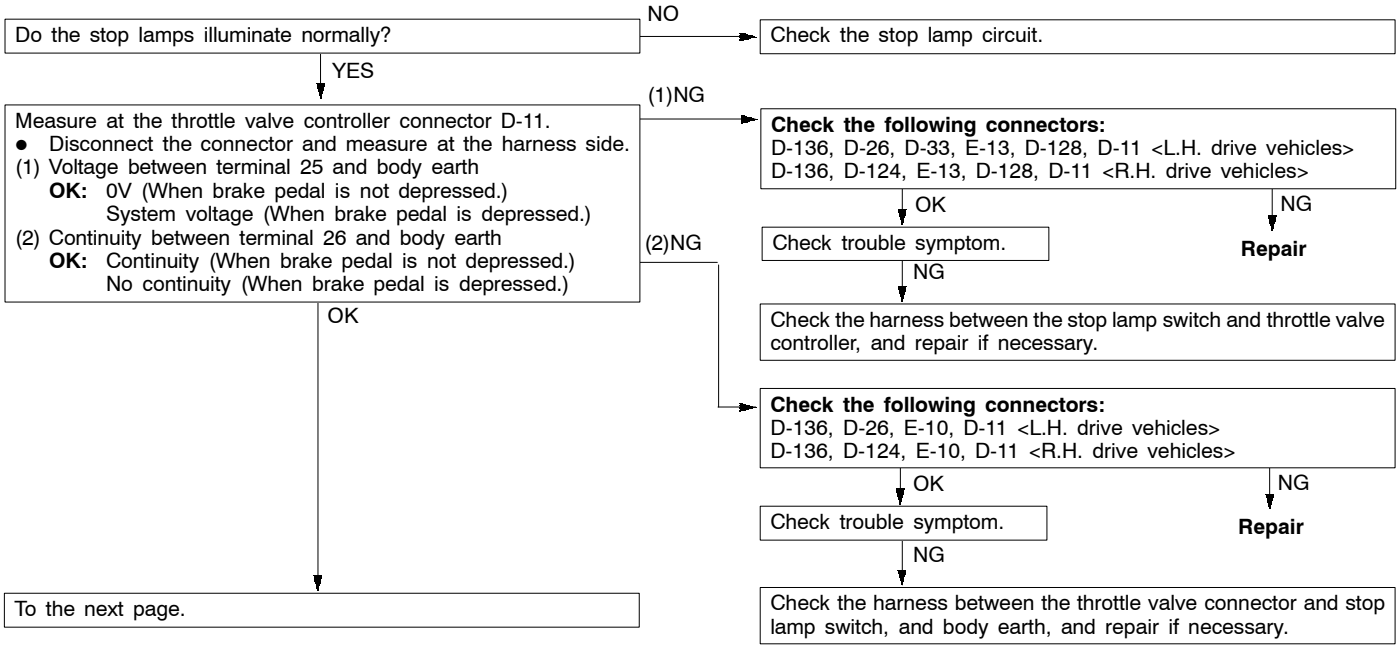


Purchased from www.WorkshopManuals.co.uk

www.WorkshopManuals.co.uk

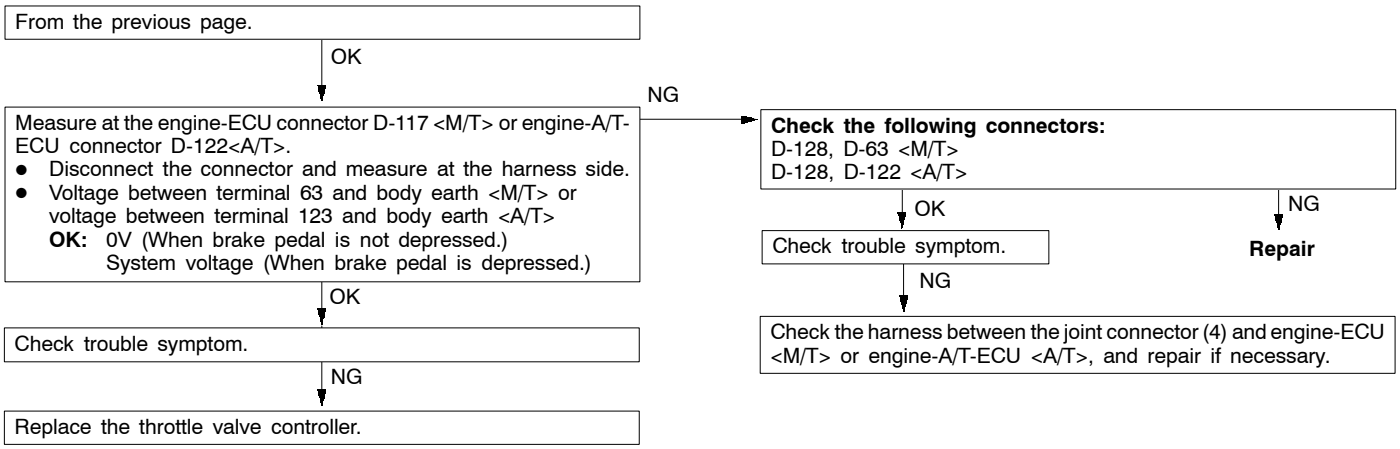


| Code No. 23 Engine-ECU <M/T> or engine-A/T-ECU <A/T> system | Probable cause |
|---|---|
| This diagnosis code is output if the engine-ECU <M/T> or engine-A/T-ECU <A/T> system is defective as follows:<br>● Communication error between the throttle valve controller and the engine-ECU <M/T><br>● Communication error between the throttle valve controller and the engine-A/T-ECU <A/T><br>● Malfunction of the engine-ECU <M/T><br>● Malfunction of the engine-A/T-ECU <A/T><br>● Malfunction of the throttle position sensor<br>● Malfunction of the accelerator pedal position sensor<br>● Malfunction of the throttle control servo<br>● Malfunction of the vehicle speed sensor | ● Malfunction of the engine-ECU <M/T><br>● Malfunction of the engine-A/T-ECU <A/T> |

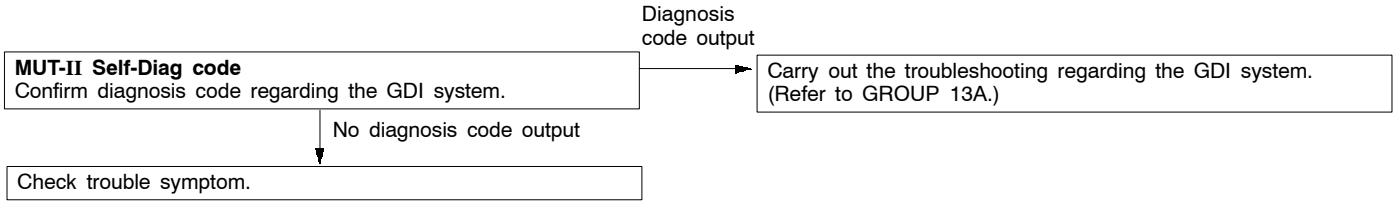


Purchased from www.WorkshopManuals.co.uk

www.WorkshopManuals.co.uk

## INSPECTION CHART FOR DIAGNOSIS CODES <4M4>

| Code No. | Diagnosis item | Reference page |
|---|---|---|
| 15 | Auto-cruise control switch system | 17-13 |
| 22 | Stop lamp switch system | 17-14 |
| 23 | Engine-ECU system | 17-14 |

## INSPECTION PROCEDURE FOR DIAGNOSIS CODES <4M4>

| Code No. 15 Auto-cruise control switch system | Probable cause |
|---|---|
| This diagnosis code is output if the RESUME and SET switches of the auto-cruise control switch remain on. | • Malfunction of the auto-cruise control switch<br>• Malfunction of the connector<br>• Malfunction of the harness<br>• Malfunction of the engine-ECU |

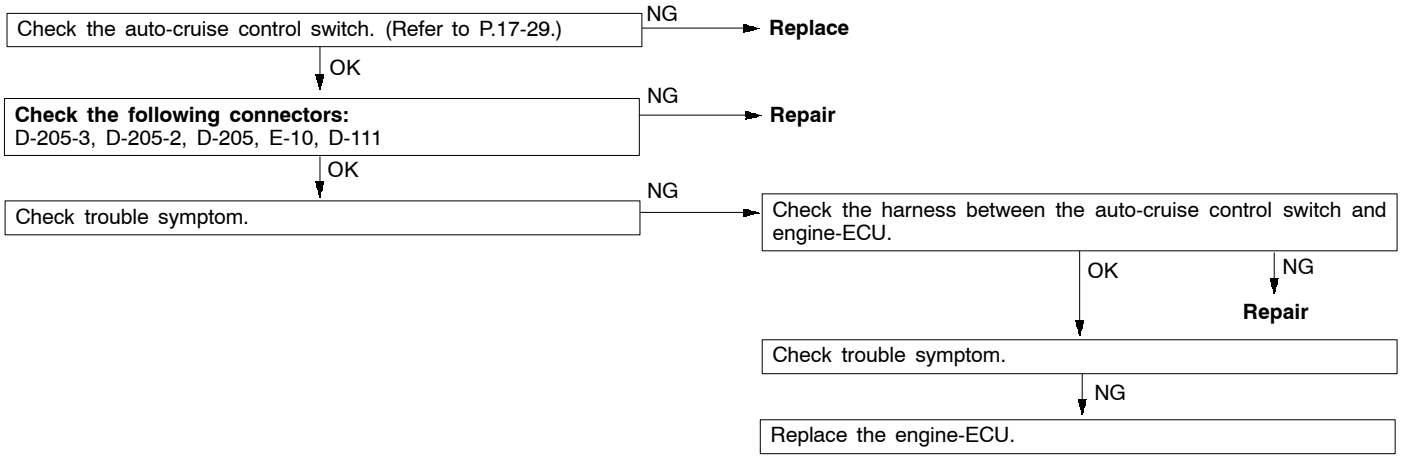


Purchased from www.WorkshopManuals.co.uk

www.WorkshopManuals.co.uk

| Code No. 22 Stop lamp switch system | Probable cause |
|---|---|
| This diagnosis code is output when the engine-ECU detects a failure in the stop lamp switch output. | • Malfunction of the stop lamp switch<br>• Malfunction of the connector<br>• Malfunction of the harness<br>• Malfunction of the engine-ECU |

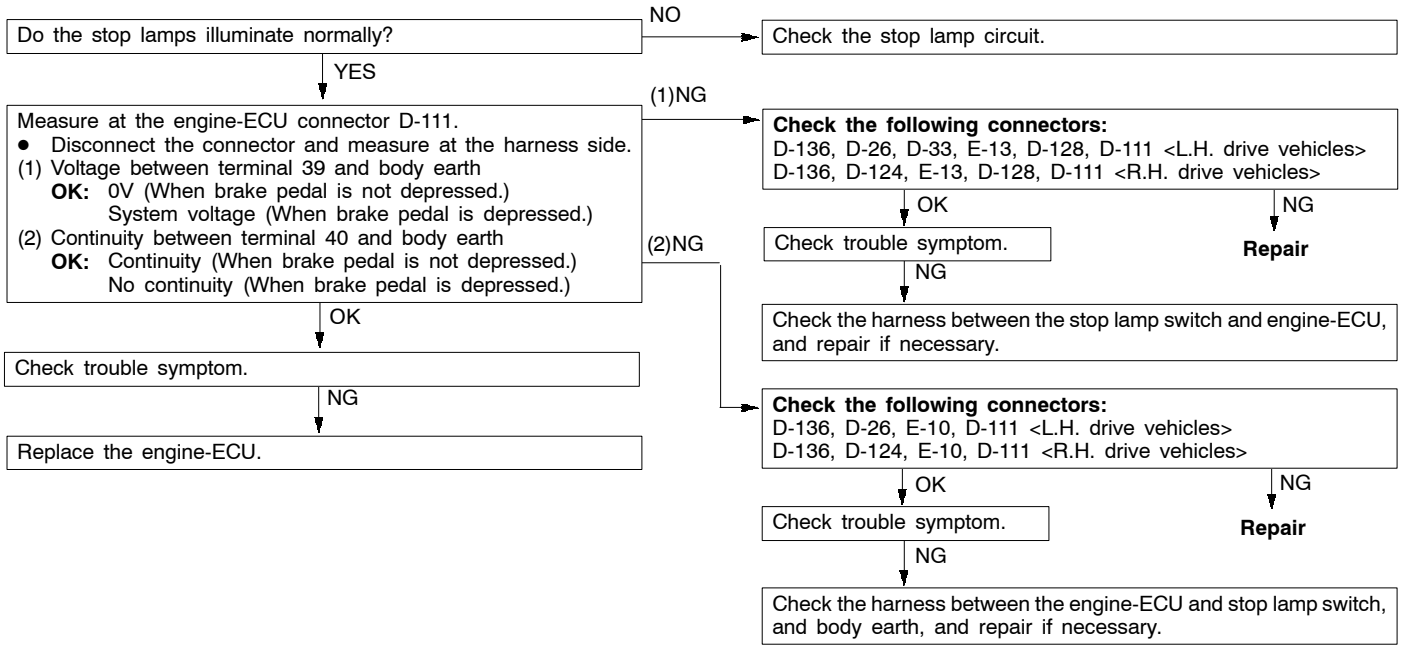


| Code No. 23 Engine-ECU system | Probable cause |
|---|---|
| This diagnosis code is output if the engine-ECU system is defective as follows:<br>• Malfunction of the engine-ECU<br>• Malfunction of the accelerator pedal position sensor<br>• Malfunction of the GE actuator (electronic governor)<br>• Malfunction of the vehicle speed sensor | • Malfunction of the engine-ECU |

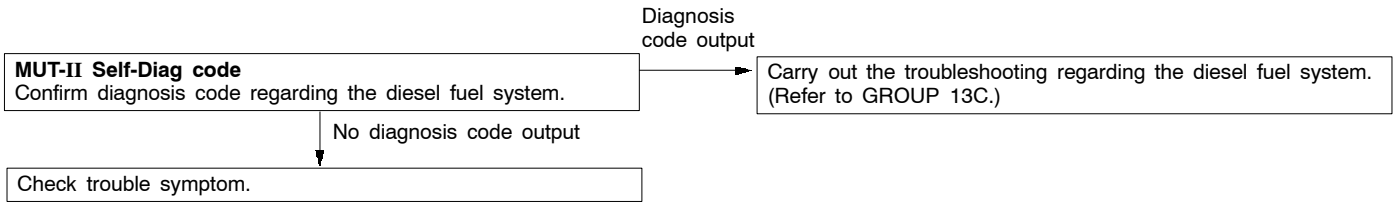


Purchased from www.WorkshopManuals.co.uk

www.WorkshopManuals.co.uk

## INSPECTION CHART FOR TROUBLE SYMPTOMS <6G7>

| Trouble symptom | | Inspection procedure No. | Reference page |
|---|---|---|---|
| Communication with MUT-II is not possible. | | 1 | 17-15 |
| Auto-cruise control is not cancelled. | Even if brake pedal is depressed | 2 | 17-16 |
| | Even if clutch pedal is depressed <M/T> | 3 | 17-16 |
| | Even if select lever is set to N range <A/T> | 4 | 17-17 |
| | Even if CANCEL switch is set to ON | 5 | 17-17 |
| Auto-cruise control cannot be set. | | 6 | 17-17 |
| Hunting (repeated acceleration and deceleration) occurs at the set vehicle speed. | | 7 | 17-18 |
| When the MAIN switch of the auto-cruise control switch is turned ON, the auto-cruise control indicator lamp does not illuminate. (However, the auto-cruise control system is normal.) | | 8 | 17-18 |

## INSPECTION PROCEDURE FOR TROUBLE SYMPTOMS <6G7>

### Inspection Procedure 1

| Communication with MUT-II is not possible. | Probable cause |
|---|---|
| If the MUT-II can not also communicate with the systems other than the GDI system, the diagnosis line circuit may be defective.<br>If the MUT-II can not communication with only the GDI system and the auto-cruise control system, the harness wire between the engine-ECU <M/T> or engine-A/T-ECU <A/T> and the diagnosis connector, may be defective.<br>In addition, if the MUT-II can not communication with only the auto-cruise control system, the auto-cruise control switch may be defective. | • Malfunction of the connector<br>• Malfunction of the harness<br>• Malfunction of the auto-cruise control switch<br>• Malfunction of the throttle valve controller<br>• Malfunction of the engine-ECU <M/T><br>• Malfunction of the engine-A/T-ECU <A/T> |

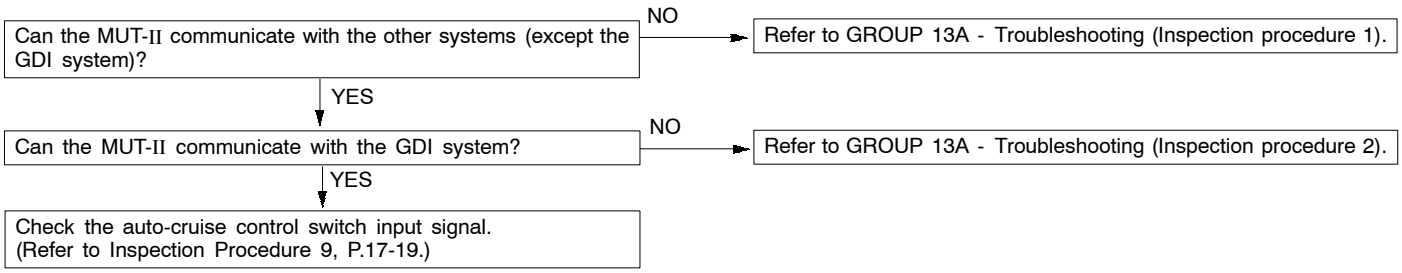


Purchased from www.WorkshopManuals.co.uk

www.WorkshopManuals.co.uk

## Inspection Procedure 2

| Even if brake pedal is depressed, auto-cruise control is not cancelled. | Probable cause |
|---|---|
| The cause is probably a malfunction of stop lamp switch or a malfunction of stop lamp circuit. | • Malfunction of the stop lamp switch<br>• Malfunction of the connector<br>• Malfunction of the harness<br>• Malfunction of the throttle valve controller |

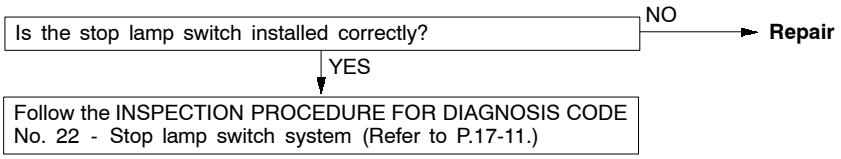


## Inspection Procedure 3

| Even if clutch pedal is depressed, auto-cruise control is not cancelled. <M/T> | Probable cause |
|---|---|
| The cause is probably a malfunction of clutch switch or clutch switch circuit. | • Malfunction of the clutch switch<br>• Malfunction of the connector<br>• Malfunction of the harness<br>• Malfunction of the throttle valve controller |

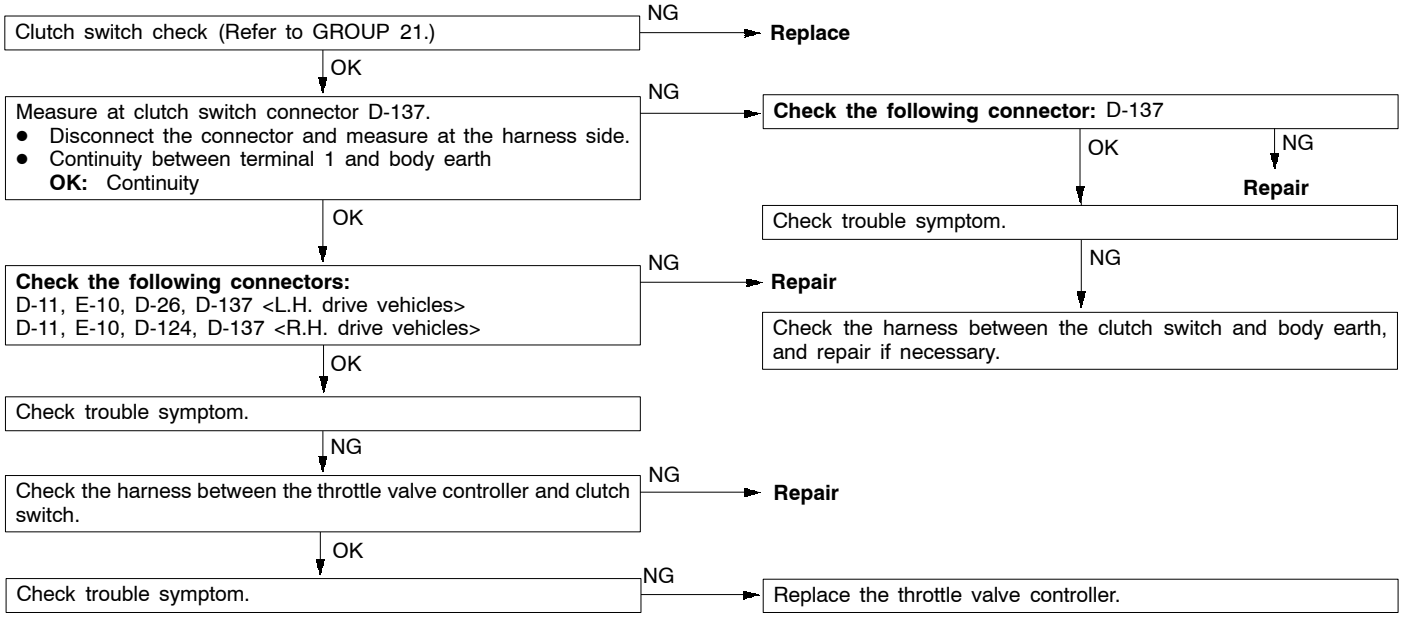


Purchased from www.WorkshopManuals.co.uk

www.WorkshopManuals.co.uk

## Inspection Procedure 4

| Even if select lever is set to N range, auto-cruise control is not cancelled. <A/T> | Probable cause |
|---|---|
| The cause is probably a defective inhibitor switch circuit. | • Malfunction of the connector<br>• Malfunction of the harness<br>• Malfunction of the throttle valve controller |

**Check the following connector:** D-11, E-113, C-05 — NG → **Repair**

OK ↓

Check trouble symptom.

NG ↓

Check the harness between the throttle valve controller and inhibitor switch. — NG → **Repair**

OK ↓

Check trouble symptom. — NG → Replace the throttle valve controller.

## Inspection Procedure 5

| Even if auto-cruise control CANCEL switch is set to ON, auto-cruise control is not cancelled. | Probable cause |
|---|---|
| The cause is probably an open-circuit in the circuit inside the CANCEL switch. | • Malfunction of the auto-cruise control switch |

Replace the auto-cruise control switch.

## Inspection Procedure 6

| Auto-cruise control cannot be set. | Probable cause |
|---|---|
| The cause is probably that the fail-safe function is cancelling auto-cruise control. In this case, the MUT-II can be used to check the trouble symptoms in each system by inspecting the diagnosis codes.<br>The MUT-II can also be used to check if the circuits of each input switch are normal or not by inspecting the data list. | • Malfunction of the auto-cruise control switch<br>• Malfunction of the harnesses<br>• Malfunction of the connectors<br>• Malfunction of the throttle valve controller<br>• Malfunction of the engine-ECU <M/T><br>• Malfunction of the engine-A/T-ECU <A/T> |

Can the auto-cruise control system communicate with the MUT-II? — NO → Follow inspection procedure for trouble symptom No.1. (Refer to P.17-15.)

YES ↓

**MUT-II Self-Diag code**
(1) Is a diagnosis code regarding the auto-cruise control system output? — (1) YES → INSPECTION CHART FOR DIAGNOSIS CODES (Refer to P.17-10.)
(2) Is a diagnosis code regarding the GDI system output? — (2) YES → Carry out the troubleshooting regarding the GDI system. (Refer to GROUP 13A.)

NO ↓

**MUT-II Data list**
02 SET switch — NG → Check the control switch input system. (Inspection procedure 9, P.17-19.)

OK ↓

**MUT-II Data list**
07 Clutch switch <M/T> or inhibitor switch <A/T> — NG → Follow inspection procedures for trouble symptom Nos. 3 or 4. (Refer to P.17-16, 17.)

NO ↓

Replace the throttle valve controller.

Check trouble symptoms. — NG → Replace the engine-ECU <M/T> or engine-A/T-ECU <A/T>

Purchased from www.WorkshopManuals.co.uk

www.WorkshopManuals.co.uk

## Inspection Procedure 7

| Hunting (repeated acceleration and deceleration) occurs at the set vehicle speed. | Probable cause |
|---|---|
| The cause is probably a malfunction of vehicle speed sensor or throttle control servo. In either case, a diagnosis code regarding the GDI system must be confirmed. | • Malfunction of the vehicle speed sensor<br>• Malfunction of the throttle control servo<br>• Malfunction of the throttle valve controller<br>• Malfunction of the engine-ECU <M/T><br>• Malfunction of the engine-A/T-ECU <A/T> |

**MUT-II Self-Diag code**
Is a diagnosis code regarding the GDI system output?
- YES → Follow the troubleshooting regarding the GDI system. (Refer to GROUP 13A.)
- NO ↓

Replace the throttle valve controller.
↓
Check trouble symptoms.
- NG → Replace the engine-ECU <M/T> or engine-A/T-ECU <A/T>

## Inspection Procedure 8

| When the MAIN switch of the auto-cruise control switch is turned on, the auto-cruise control indicator lamp does not illuminate. (However, the auto-cruise control in normal.) | Probable cause |
|---|---|
| There may be a burnt-out bulb or a malfunction of the auto-cruise control indicator lamp circuit. | • Burnt-out bulb<br>• Malfunction of the harness<br>• Malfunction of the connector<br>• Malfunction of the engine-ECU <M/T><br>• Malfunction of the engine-A/T-ECU <A/T> |

Auto-cruise control indicator lamp bulb check
- NG → **Replace**
- OK ↓

Measure at the combination meter connector D-01.
- Disconnect the connector and measure at the harness side.
- Ignition switch and MAIN switch: ON
- Voltage between terminal 62 and earth

**OK:** System voltage
- NG → **Check the following connector:** D-01
  - OK ↓
  - NG → **Repair**

  Check trouble symptom.
  - NG ↓

  Check the harness between the J/B and the combination meter, and repair if necessary.
- OK ↓

Measure at the engine-ECU connector D-116 <M/T> or engine-A/T-ECU connector D-119 <A/T>.
- Disconnect the connector and measure at the harness side.
- Ignition switch and auto-cruise control MAIN switch: ON
- Voltage between terminal 28 and earth <M/T> or voltage between terminal 15 and earth <A/T>

**OK:** System voltage
- NG → **Check the following connectors:**
  D-02, E-10, D-116 <M/T>
  D-02, E-10, D-119 <A/T>
  - OK ↓
  - NG → **Repair**

  Check trouble symptom.
  - NG ↓

  Check the harness between the combination meter and the engine-ECU <M/T> or engine-A/T-ECU <A/T>, and repair if necessary.
- OK ↓

Check trouble symptom.
- NG ↓

Replace the engine-ECU <M/T> or engine-A/T-ECU <A/T>

Purchased from www.WorkshopManuals.co.uk

www.WorkshopManuals.co.uk

## Inspection Procedure 9

### Auto-cruise control switch input system check

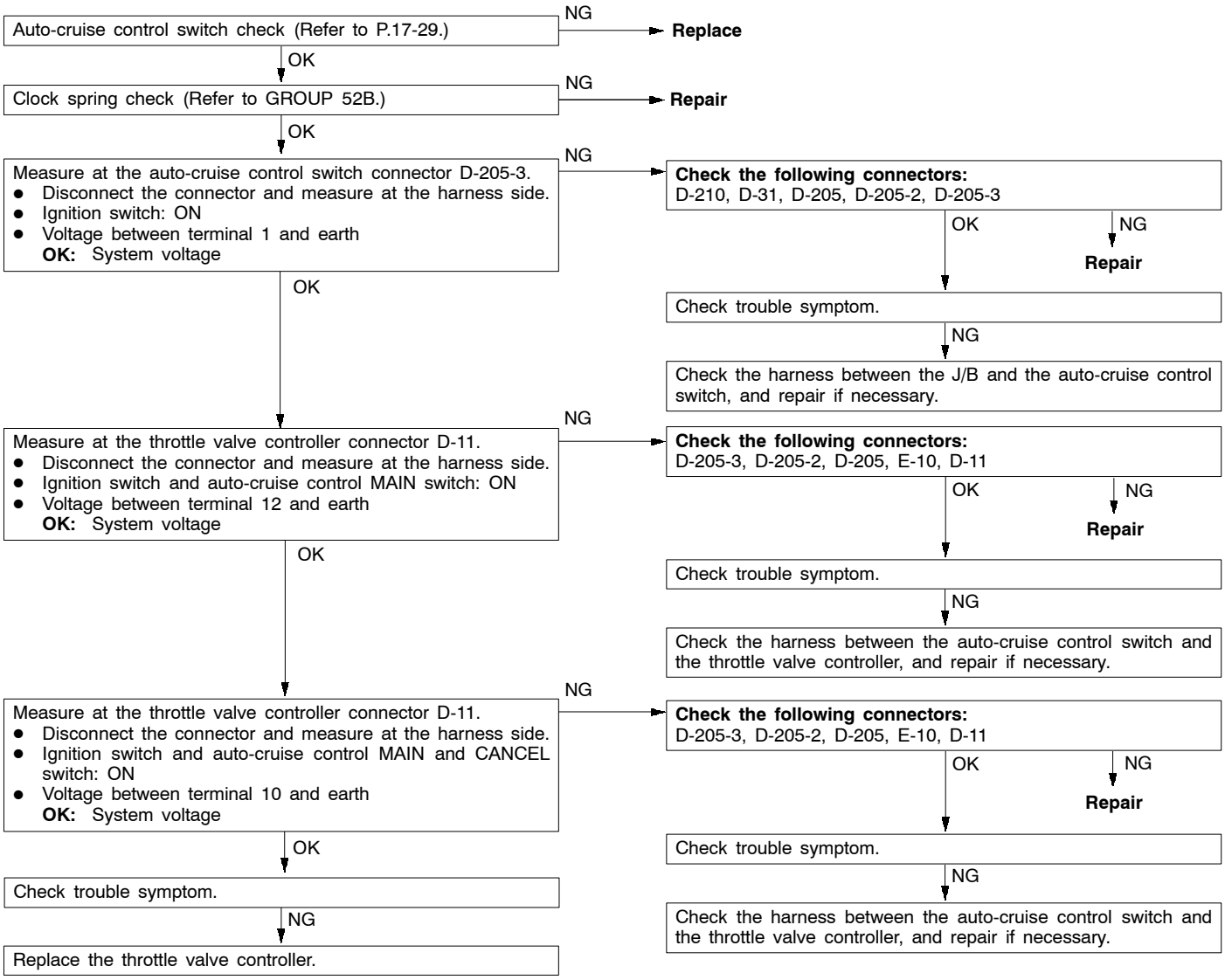


Purchased from www.WorkshopManuals.co.uk

www.WorkshopManuals.co.uk

## INSPECTION CHART FOR TROUBLE SYMPTOMS <4M4>

| Trouble symptom | | Inspection procedure No. | Reference page |
|---|---|---|---|
| Communication with MUT-II is not possible. | | 1 | 17-20 |
| Auto-cruise control is not cancelled. | Even if brake pedal is depressed | 2 | 17-21 |
| | Even if clutch pedal is depressed <M/T> | 3 | 17-21 |
| | Even if select lever is set to N range <A/T> | 4 | 17-22 |
| | Even if CANCEL switch is set to ON | 5 | 17-22 |
| Auto-cruise control cannot be set. | | 6 | 17-22 |
| Hunting (repeated acceleration and deceleration) occurs at the set vehicle speed. | | 7 | 17-23 |
| When the MAIN switch of the auto-cruise control switch is turned ON, the auto-cruise control indicator lamp does not illuminate. (However, the auto-cruise control system is normal.) | | 8 | 17-23 |

## INSPECTION PROCEDURE FOR TROUBLE SYMPTOMS <4M4>

### Inspection Procedure 1

| Communication with MUT-II is not possible. | Probable cause |
|---|---|
| If the MUT-II can not also communicate with the systems other than the diesel fuel system, the diagnosis line circuit may be defective.<br>If the MUT-II can not communicate with only the diesel fuel system and the auto-cruise control system, the harness wire between the engine-ECU and the diagnosis connector, may be defective.<br>In addition, if the MUT-II can not communicate with only the auto-cruise control system, the auto-cruise control switch may be defective. | • Malfunction of the connector<br>• Malfunction of the harness<br>• Malfunction of the auto-cruise control switch<br>• Malfunction of the engine-ECU |

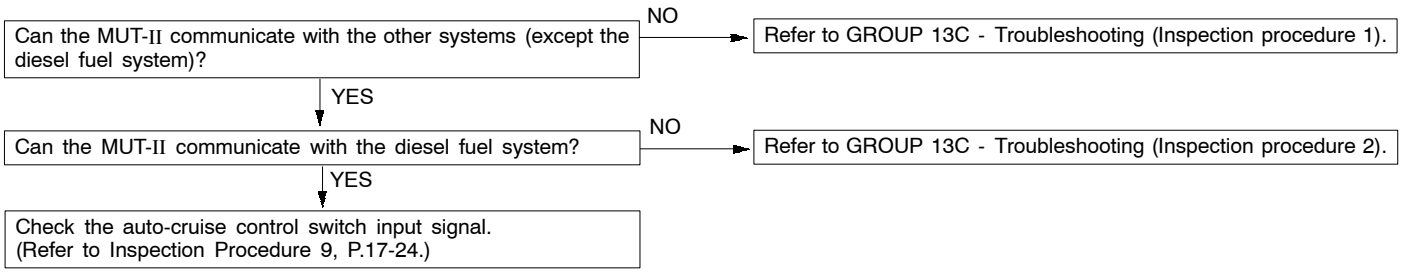


Purchased from www.WorkshopManuals.co.uk

www.WorkshopManuals.co.uk

## Inspection Procedure 2

| Even if brake pedal is depressed, auto-cruise control is not cancelled. | Probable cause |
|---|---|
| The cause is probably a malfunction of stop lamp switch or a malfunction of stop lamp circuit. | • Malfunction of the stop lamp switch<br>• Malfunction of the connector<br>• Malfunction of the harness<br>• Malfunction of the engine-ECU |

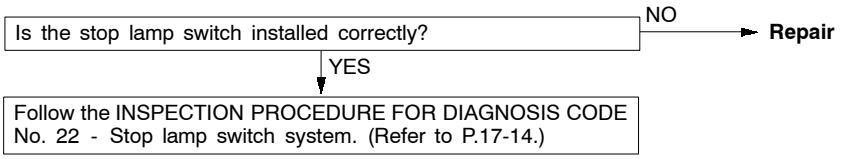


## Inspection Procedure 3

| Even if clutch pedal is depressed, auto-cruise control is not cancelled. <M/T> | Probable cause |
|---|---|
| The cause is probably a malfunction of clutch switch or clutch switch circuit. | • Malfunction of the clutch switch<br>• Malfunction of the connector<br>• Malfunction of the harness<br>• Malfunction of the engine-ECU |

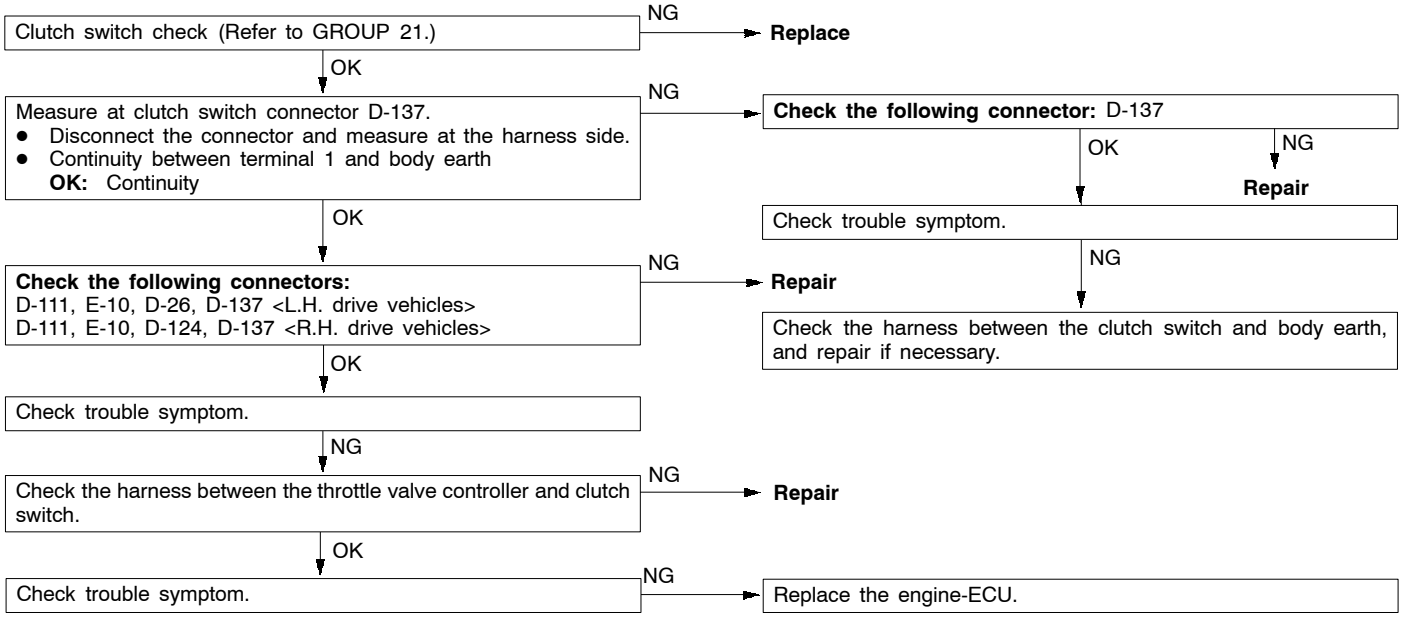


Purchased from www.WorkshopManuals.co.uk

www.WorkshopManuals.co.uk

## Inspection Procedure 4

| Even if select lever is set to N range, auto-cruise control is not cancelled. <A/T> | Probable cause |
|---|---|
| The cause is probably a defective inhibitor switch circuit. | • Malfunction of the connector<br>• Malfunction of the harness<br>• Malfunction of the engine-ECU |

**Check the following connectors:** D-113, E-113, C-05 — NG → **Repair**

↓ OK

Check trouble symptom.

↓ NG

Check the harness between the engine-ECU and inhibitor switch. — NG → **Repair**

↓ OK

Check trouble symptom. — NG → Replace the engine-ECU.

## Inspection Procedure 5

| Even if auto-cruise control CANCEL switch is set to ON, auto-cruise control is not cancelled. | Probable cause |
|---|---|
| The cause is probably an open-circuit in the circuit inside the CANCEL switch. | • Malfunction of the auto-cruise control switch |

Replace the auto-cruise control switch.

## Inspection Procedure 6

| Auto-cruise control cannot be set. | Probable cause |
|---|---|
| The cause is probably that the fail-safe function is cancelling auto-cruise control. In this case, the MUT-II can be used to check the trouble symptoms in each system by inspecting the diagnosis codes.<br>The MUT-II can also be used to check if the circuits of each input switch are normal or not by inspecting the data list. | • Malfunction of the auto-cruise control switch<br>• Malfunction of the harnesses<br>• Malfunction of the connectors<br>• Malfunction of the engine-ECU |

Can the auto-cruise control system communicate with the MUT-II? — NO → Follow inspection procedure for trouble symptom No.1. (Refer to P.17-20.)

↓ YES

**MUT-II Self-Diag code**
(1) Is a diagnosis code regarding the auto-cruise control system output? — (1) YES → INSPECTION CHART FOR DIAGNOSIS CODES (Refer to P.17-13.)
(2) Is a diagnosis code regarding the diesel fuel system output? — (2) YES → Carry out the troubleshooting regarding the diesel fuel system. (Refer to GROUP 13C.)

↓ NO

**MUT-II Data list**
02 SET switch — NG → Check the control switch input system. (Inspection procedure 9, P.17-24.)

↓ OK

**MUT-II Data list**
07 Clutch switch <M/T> or inhibitor switch <A/T> — NG → Follow inspection procedures for trouble symptom Nos. 3 or 4. (Refer to P.17-21, 22.)

↓ NO

Replace the throttle valve controller.

↓

Check trouble symptoms. — NG → Replace the engine-ECU.

Purchased from www.WorkshopManuals.co.uk

www.WorkshopManuals.co.uk

## Inspection Procedure 7

| Hunting (repeated acceleration and deceleration) occurs at the set vehicle speed. | Probable cause |
|---|---|
| The cause is probably a malfunction of vehicle speed sensor or GE actuator (electronic governor).<br>In either case, a diagnosis code regarding the diesel fuel system must be confirmed. | • Malfunction of the vehicle speed sensor<br>• Malfunction of the GE actuator (electronic governor)<br>• Malfunction of the engine-ECU |

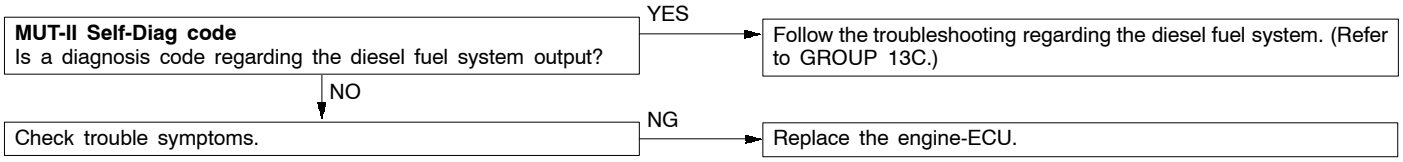


## Inspection Procedure 8

| When the MAIN switch of the auto-cruise control switch is turned on, the auto-cruise control indicator lamp does not illuminate. (However, the auto-cruise control in normal.) | Probable cause |
|---|---|
| There may be a burnt-out bulb or a malfunction of the auto-cruise control indicator lamp circuit. | • Burnt-out bulb<br>• Malfunction of the harness<br>• Malfunction of the connector<br>• Malfunction of the engine-ECU |

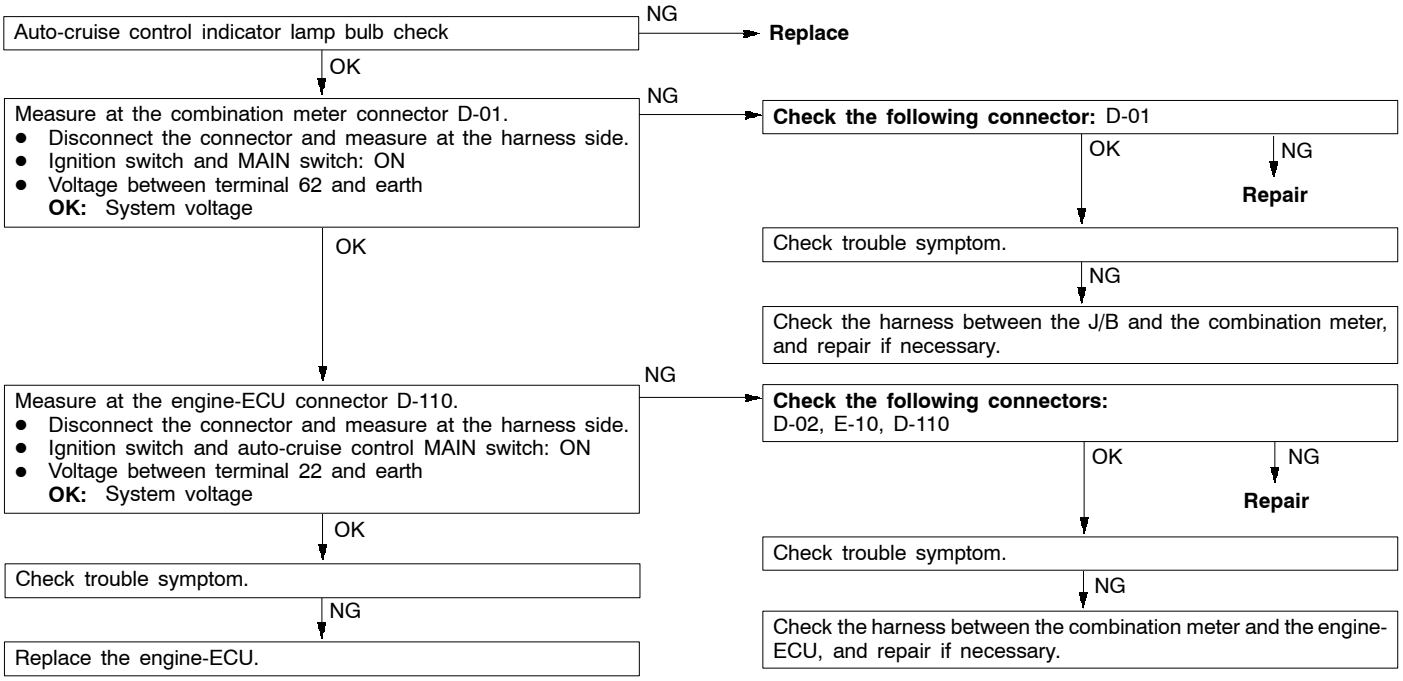


Purchased from www.WorkshopManuals.co.uk

www.WorkshopManuals.co.uk

## Inspection Procedure 9

### Auto-cruise control switch input system check

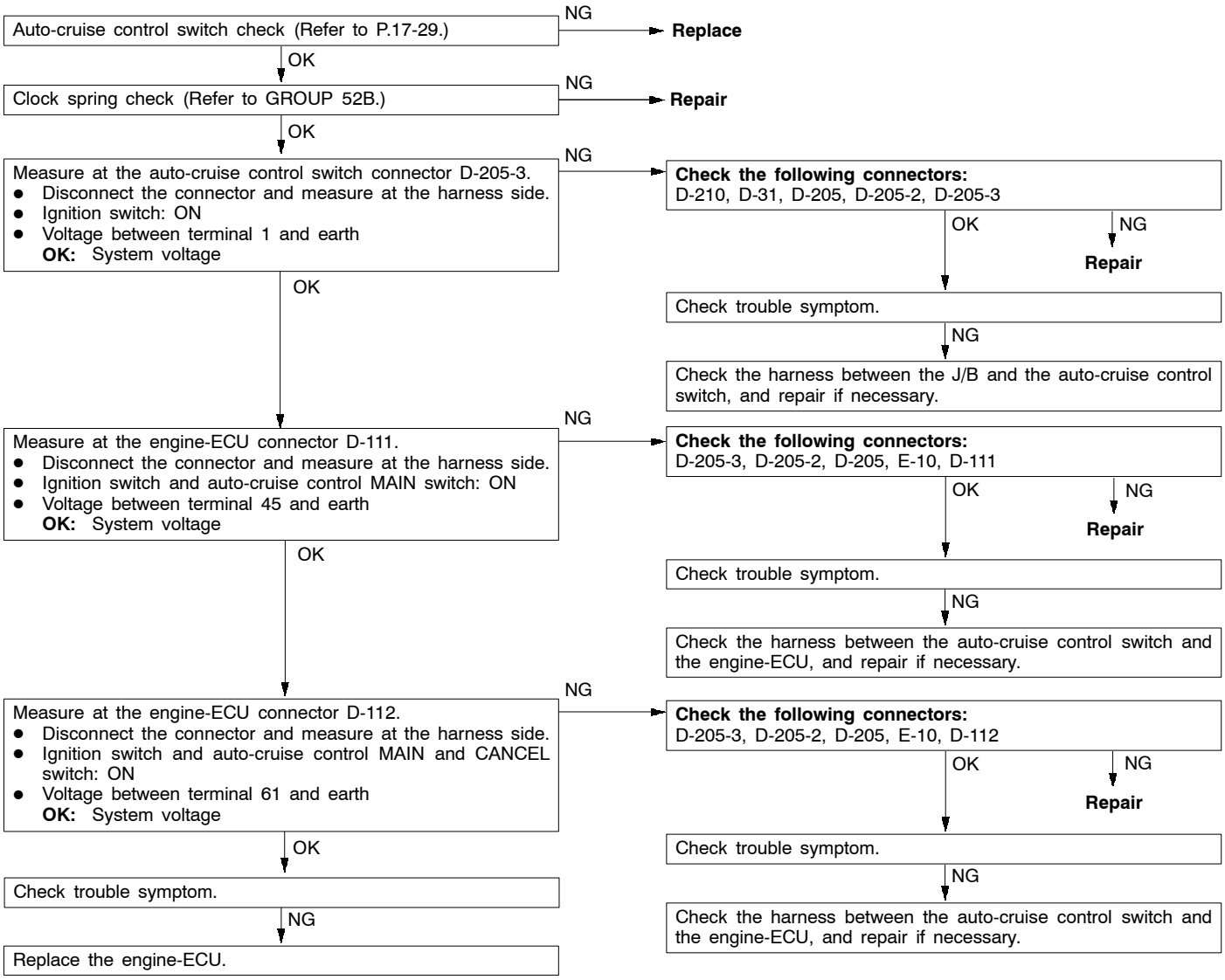


Purchased from www.WorkshopManuals.co.uk

www.WorkshopManuals.co.uk

## DATA LIST REFERENCE TABLE

For the data, which is input to the engine-ECU <6G7-M/T, 4M4>, engine-A/T-ECU <6G7-A/T> and throttle valve controller <6G7>, the following items can be read out by using the MUT-II.

### HOW TO READ OUT DATA LIST

1. Connect the MUT-II to the 16-pin diagnosis connector.

   **Caution**
   **Turn off the ignition switch befor connecting and disconnecting the MUT-II.**

2. Turn the ignition switch to "ON" position.
3. Select "auto-cruise control" on the MUT-II menu, and then read out the data list.

**<6G7>**

| Terminal No. | Check item | | Check conditions | | Normal condition |
|---|---|---|---|---|---|
| 01 | Auto-cruise control switch | MAIN | MAIN switch: ON | | ON |
| | | | MAIN switch: OFF | | OFF |
| 02 | | SET (COAST) | MAIN switch: ON | SET switch: ON | ON |
| | | | | SET switch: OFF | OFF |
| 03 | | RESUME (ACCEL) | | RESUME switch: ON | ON |
| | | | | RESUME switch: OFF | OFF |
| 04 | | CANCEL | | CANCEL switch: ON | ON |
| | | | | CANCEL switch: OFF | OFF |
| 05 | Stop lamp switch (for stop lamp circuit) | | Brake pedal: Depressed | | ON |
| | | | Brake pedal: Released | | OFF |
| 06 | Stop lamp switch (for auto-cruise control circuit) | | Brake pedal: Depressed | | OFF |
| | | | Brake pedal: Released | | ON |
| 07 | Clutch switch <M/T> | | Clutch pedal: Depressed | | ON |
| | | | Brake pedal: Released | | OFF |
| | Inhibitor switch <A/T> | | Selector lever: "N", "P" position | | ON |
| | | | Selector lever: Other than "N", "P" position | | OFF |
| 08 | Accelerator switch (Idle position switch) | | Accelerator pedal: Released | | ON |
| | | | Accelerator pedal: Depressed | | OFF |
| 09 | Auto-cruise control system | | Auto-cruise control system: Activated | | ON |
| | | | Auto-cruise control system: Not activated | | OFF |
| 10 | Vehicle speed sensor | | Road test the vehicle | | The speedometer and the MUT-II display the same value. |

Purchased from www.WorkshopManuals.co.uk

www.WorkshopManuals.co.uk

| Terminal No. | Check item | Check conditions | Normal condition |
|---|---|---|---|
| 11 | Throttle position sensor | Accelerator pedal: Fully depressed | 450 - 800 mV |
| | | Accelerator pedal: Depressed | The more deeply the pedal is depressed, the higher value the MUT-II display |
| | | Accelerator pedal: Release | 4,200 - 4,900 mV |
| 12 | Accelerator pedal position sensor | Accelerator pedal: Fully depressed | 985 - 1,085 mV |
| | | Accelerator pedal: Depressed | The more deeply the pedal is depressed, the higher value the MUT-II display |
| | | Accelerator pedal: Release | 4,000 mV or more |

**<4M4>**

| Terminal No. | Check item | | Check conditions | | Normal condition |
|---|---|---|---|---|---|
| 01 | Auto-cruise control switch | MAIN | MAIN switch: ON | | ON |
| | | | MAIN switch: OFF | | OFF |
| 02 | | SET (COAST) | MAIN switch: ON | SET switch: ON | ON |
| | | | | SET switch: OFF | OFF |
| 03 | | RESUME (ACCEL) | | RESUME switch: ON | ON |
| | | | | RESUME switch: OFF | OFF |
| 04 | | CANCEL | | CANCEL switch: ON | ON |
| | | | | CANCEL switch: OFF | OFF |
| 05 | Stop lamp switch (for stop lamp circuit) | | Brake pedal: Depressed | | ON |
| | | | Brake pedal: Released | | OFF |
| 06 | Stop lamp switch (for auto-cruise control circuit) | | Brake pedal: Depressed | | OFF |
| | | | Brake pedal: Released | | ON |
| 07 | Clutch switch <M/T> | | Clutch pedal: Depressed | | ON |
| | | | Brake pedal: Released | | OFF |
| | Inhibitor switch <A/T> | | Selector lever: “N”, “P” position | | ON |
| | | | Selector lever: Other than “N”, “P” position | | OFF |
| 08 | Accelerator switch (Idle position switch) | | Accelerator pedal: Released | | ON |
| | | | Accelerator pedal: Depressed | | OFF |
| 09 | Auto-cruise control system | | Auto-cruise control system: Activated | | ON |
| | | | Auto-cruise control system: Not activated | | OFF |

Purchased from www.WorkshopManuals.co.uk

www.WorkshopManuals.co.uk

| Terminal No. | Check item | Check conditions | Normal condition |
|---|---|---|---|
| 10 | Vehicle speed sensor | Road test the vehicle | The speedometer and the MUT-II display the same value. |
| 11 | Acclelerator pedal position sensor | Accelerator pedal: Fully depressed | 0.9 - 1.1 V |
| | | Accelerator pedal: Release | 4.1 V or more |

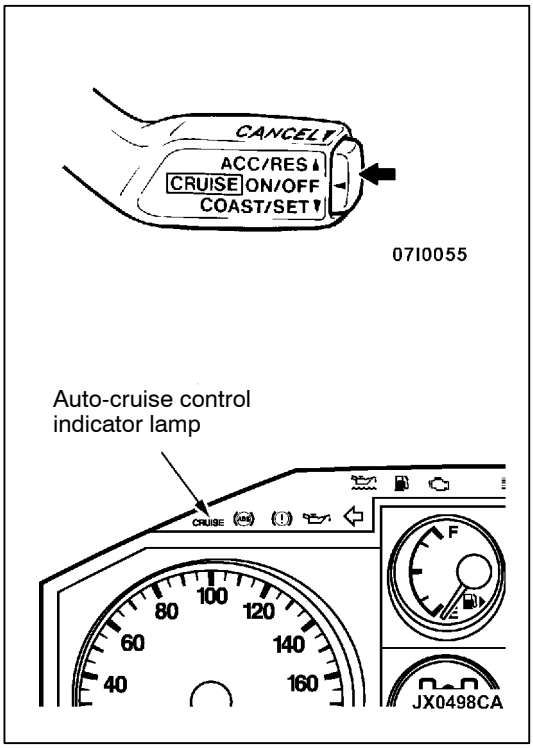


# ON-VEHICLE SERVICE

## AUTO-CRUISE CONTROL MAIN SWITCH CHECK

1. Turn the ignition key to ON.
2. Check to be sure that the indicator lamp within the combination meter illuminates when the MAIN switch is switched ON.

Purchased from www.WorkshopManuals.co.uk

www.WorkshopManuals.co.uk

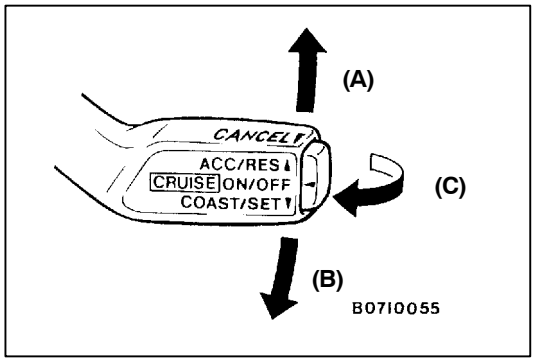


## AUTO-CRUISE CONTROL SWITCH CHECK

### AUTO-CRUISE CONTROL SETTING

1. Switch ON the MAIN switch.
2. Drive at the desired speed within the range of approximately 40 - 200 km/h.
3. Push the auto-cruise control switch in the direction of arrow (B).
4. Check to be sure that when the switch is released the speed is the desired constant speed.

   NOTE
   If the vehicles speed decreases to approximately 15 km/h below the set speed because of climbing a hill for example, the auto-cruise control will be cancelled.

### SPEED-INCREASE SETTING

1. Set to the desired speed.
2. Push the auto-cruise control switch in the direction of arrow (A).
3. Check to be sure that acceleration continues while the switch is hold, and that when it is released the constant speed at the time when it was released becomes the driving speed.

   NOTE
   Acceleration can be continued even if the vehicle speed has passed the high-speed limit (approx. 200 km/h). But the speed when the auto-cruise control switch is released will be recorded as the high-speed limit.

### SPEED-REDUCTION SETTING

1. Set to the desired speed.
2. Push the auto-cruise control switch in the direction of arrow (B).
3. Check to be sure that deceleration continues while the switch is pressed, and that when it is released the constant speed at the time when it was released becomes the driving speed.

   NOTE
   When the vehicle speed reaches the low limit (approximately 40 km/h) during deceleration, the auto-cruise control will be cancelled.

### RETURN TO THE SET SPEED BEFORE CANCELLATION AND AUTO-CRUISE CONTROL CANCELLATION

1. Set the auto-cruise speed control.
2. When any of the following operations are performed while at constant speed during auto-cruise control, check if normal driving is resumed and deceleration occurs.
   a. The auto-cruise control switch is pushed in the direction of arrow (C).
   b. The brake pedal is depressed.
   c. The clutch pedal is depressed. <M/T>
   d. The selector lever is moved to the “N” range. <A/T>
3. When the auto-cruise control switch is pushed in the direction of arrow (A) at a vehicle speed of 40 km/h or higher, check if the vehicle speed returns to the speed before auto-cruise control driving was cancelled, and constant speed driving occurs.
4. When the MAIN switch is turned to OFF while driving at constant speed, check if normal driving is resumed and deceleration occurs.

Purchased from www.WorkshopManuals.co.uk

www.WorkshopManuals.co.uk

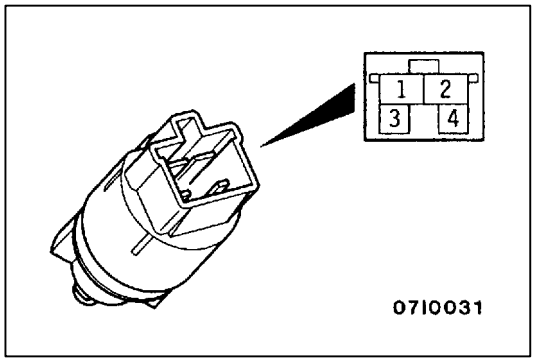


## AUTO-CRUISE CONTROL COMPONENT CHECK

### STOP LAMP SWITCH

1. Disconnect the connector.
2. Check for continuity between the terminals of the switch.

| Measurement conditions | Terminal No. | | | |
|---|---|---|---|---|
| | 1 | 2 | 3 | 4 |
| When brake pedal is depressed. (for stop lamp circuit) | ○ | ○ | | |
| When brake pedal is depressed. (for auto-cruise control circuit) | | | ○ | ○ |

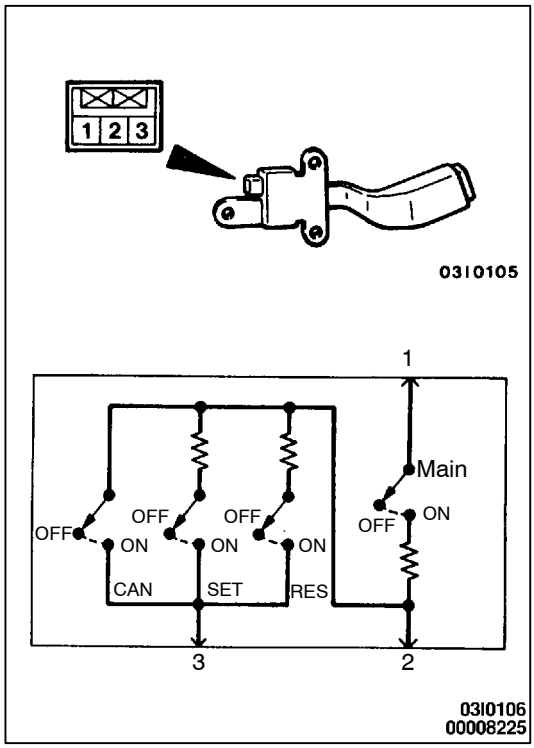


### AUTO-CRUISE CONTROL SWITCH CHECK

Measure the resistance between the terminals when each of the SET, RESUME, CANCEL and MAIN switches is pressed. If the values measured at this time correspond to those in the table below, then there is no problem.

| Switch position | | Resistance between terminals | |
|---|---|---|---|
| MAIN switch: OFF | | No continuity | |
| MAIN switch: ON | | Terminals 1 and 2 | Approx. 3.9 kΩ |
| MAIN switch: ON | CANCEL switch: ON | Terminals 2 and 3 | Approx. 0 Ω |
| | RESUME switch: ON | Terminals 2 and 3 | Approx. 910 Ω |
| | SET switch: ON | Terminals 2 and 3 | Approx. 220 Ω |

### CLUTCH PEDAL POSITION SWITCH

Refer to GROUP 21 - On-vehicle Service.

### THROTTLE POSITION SENSOR

Refer to GROUP 13A - On-vehicle Service.

### VEHICLE SPEED SENSOR CHECK

Refer to GROUP54 - Combination meters.

Purchased from www.WorkshopManuals.co.uk

www.WorkshopManuals.co.uk

# AUTO-CRUISE CONTROL SWITCH

## REMOVAL AND INSTALLATION

**CAUTION: SRS**
**Before removal of air bag module, refer to GROUP 52B - SRS Service Precautions and Air Bag Modules and Clock Spring.**

**Pre-removal and Post-installation Operation**
Air Bag Module Removal and Installation
(Refer to GROUP 52B.)

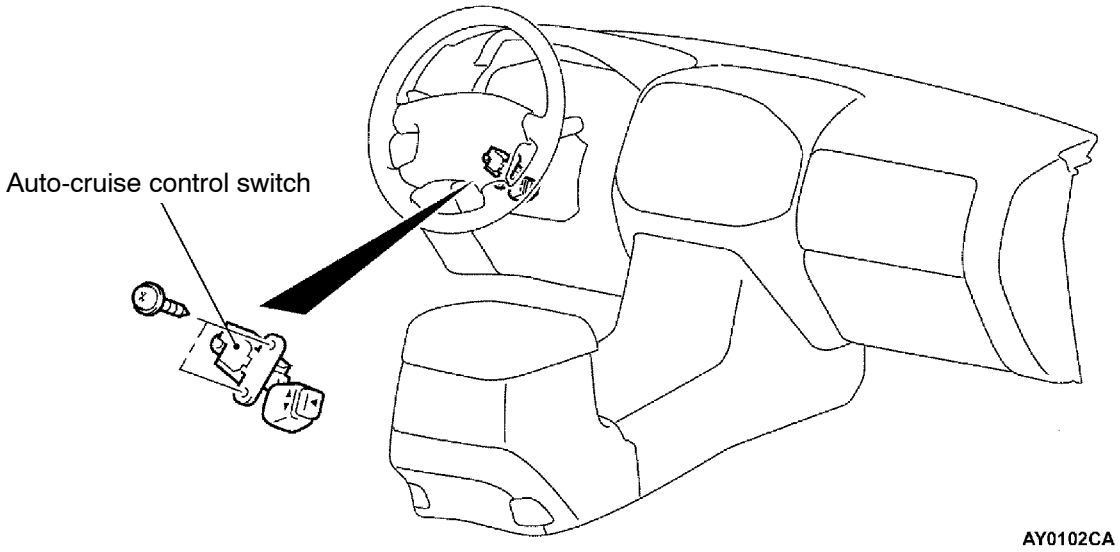


Purchased from www.WorkshopManuals.co.uk

www.WorkshopManuals.co.uk

# EMISSION CONTROL SYSTEM <6G7>

## GENERAL INFORMATION

The emission control system consists of the following subsystems:
- Crankcase emission control system
- Evaporative emission control system
- Exhaust emission control system

| Items | Name | Specification |
|---|---|---|
| Crankcase emission control system | Positive crankcase ventilation (PCV) valve | Variable flow type<br>(Purpose: HC reduction) |
| Evaporative emission control system | Canister<br>Purge control solenoid valve | Equipped<br>Duty cycle type solenoid valve<br>(Purpose: HC reduction) |
| Exhaust emission control system | Air-fuel ratio control device - GDI system | Oxygen sensor feedback type<br>(Purpose: CO, HC, NOx reduction) |
| | Exhaust gas recirculation system<br>● EGR valve | Equipped<br>Stepper motor type<br>(Purpose: NOx reduction) |
| | Catalytic converter | Monolith type<br>(Purpose: CO, HC, NOx reduction) |

## EMISSION CONTROL DEVICE REFERENCE TABLE

| Related parts | Crankcase emission control system | Evaporative emission control system | Air/fuel ratio control system | Catalytic converter | Exhaust gas recirculation system | Reference page |
|---|---|---|---|---|---|---|
| PCV valve | × | | | | | 17-35 |
| Purge control solenoid valve | | × | | | | 17-38 |
| GDI system component | | × | × | | | GROUP 13A |
| Catalytic converter | | | | × | | 17-44 |
| EGR valve | | | | | × | 17-40 |

Purchased from www.WorkshopManuals.co.uk

www.WorkshopManuals.co.uk

# SERVICE SPECIFICATIONS

| Items | Standard value |
|---|---|
| Purge control solenoid valve coil resistance (at 20°C) Ω | 28 - 36 |
| EGR valve coil resistance (at 20°C) Ω | 10 - 20 |

# SPECIAL TOOL

| Tool | Number | Name | Use |
|---|---|---|---|
| 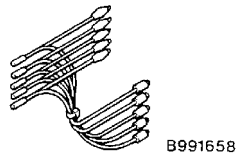 B991658 | MB991658 | Test harness set | Inspection of EGR valve |

# VACUUM HOSE

## VACUUM HOSE PIPING DIAGRAM

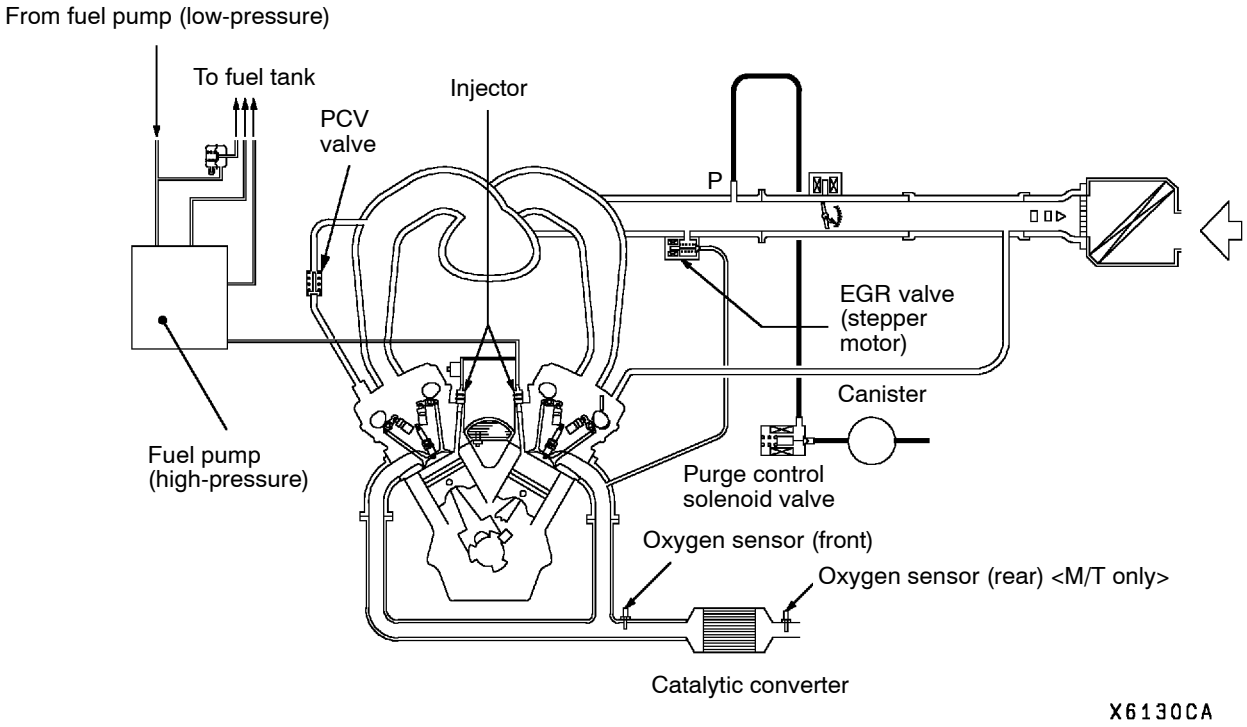


Purchased from www.WorkshopManuals.co.uk

www.WorkshopManuals.co.uk

## VACUUM CIRCUIT DIAGRAM

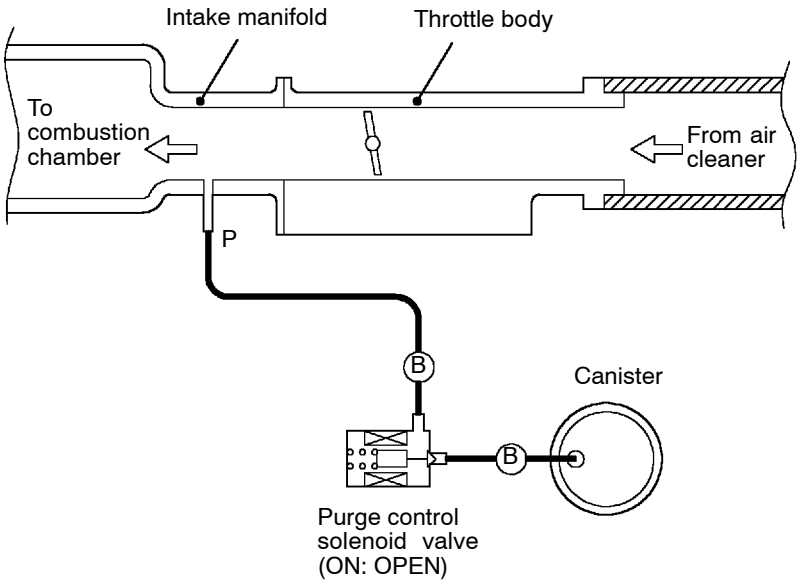


**Vacuum hose colour**
B: Black

X6131CA

## VACUUM HOSE CHECK

1. Using the piping diagram as a guide, check to be sure that the vacuum hoses are correctly connected.
2. Check the connection condition of the vacuum hoses, (removed, loose, etc.) and check to be sure that there are no bends or damage.

## VACUUM HOSE INSTALLATION

1. When connecting the vacuum hoses, they should be securely inserted onto the nipples.
2. Connect the hoses correctly, using the vacuum hose piping diagram as a guide.

Purchased from www.WorkshopManuals.co.uk

www.WorkshopManuals.co.uk

# CRANKCASE EMISSION CONTROL SYSTEM

## GENERAL INFORMATION

The crankcase emission control system prevents blow-by gases from escaping inside the crankcase into the atmosphere.
Fresh air is sent from the air cleaner into the crankcase through the breather hose. The air becomes mixed with the blow-by gases inside the crankcase.
The blow-by gas inside the crankcase is drawn into the intake manifold through the positive crankcase ventilation (PCV) valve.

The PCV valve lifts the plunger according to the intake manifold vacuum so as to regulate the flow of blow-by gas properly. In other words, the blow-by gas flow is regulated during low load engine operation to maintain engine stability, while the flow is increased during high load operation to improve the ventilation performance.

## SYSTEM DIAGRAM

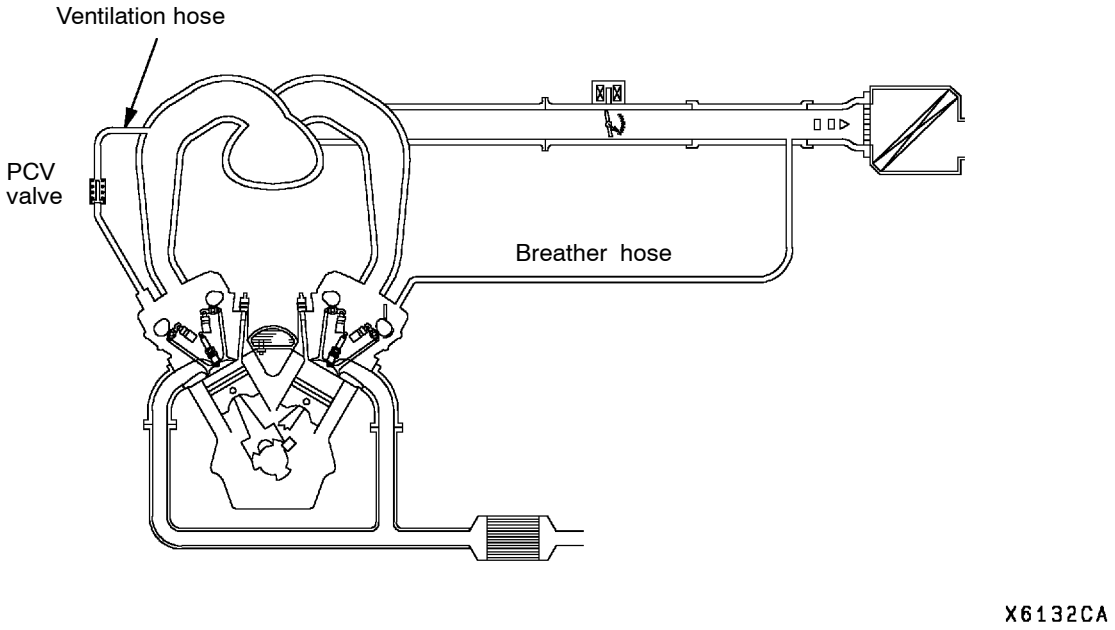


## COMPONENT LOCATION

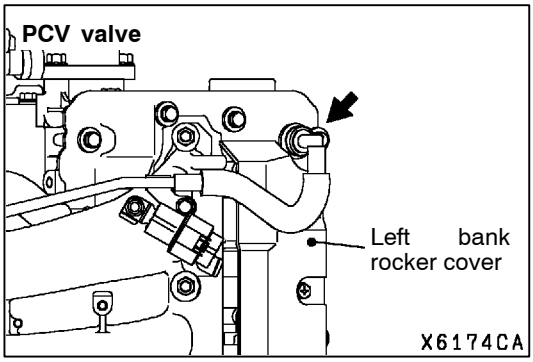


Purchased from www.WorkshopManuals.co.uk

www.WorkshopManuals.co.uk

## POSITIVE CRANKCASE VENTILATION SYSTEM CHECK

1. Remove the ventilation hose from the PCV valve.
2. Remove the PCV valve from the rocker cover.
3. Reinstall the PCV valve at the ventilation hose.
4. Start the engine and run at idle.

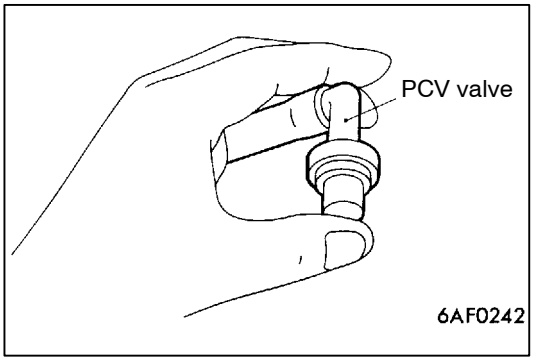


5. Place a finger at the opening of the PCV valve and check that vacuum of the intake manifold is felt.

   NOTE
   At this moment, the plunger in the PCV valve moves back and forth.
6. If vacuum is not felt, clean the PCV valve or replace it.

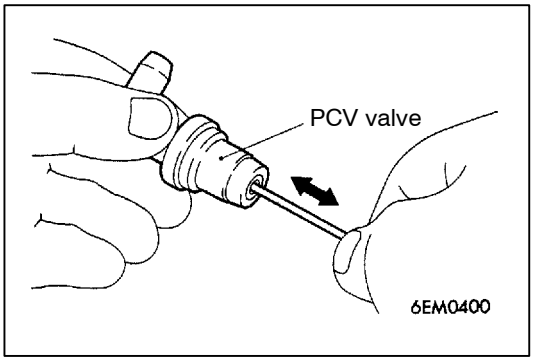


## PCV VALVE CHECK

1. Insert a thin rod into the PCV valve from the side shown in the illustration (rocker cover installation side), and move the rod back and forth to check that the plunger moves.
2. If the plunger does not move, there is clogging in the PCV valve. In this case, clean or replace the PCV valve.

Purchased from www.WorkshopManuals.co.uk

www.WorkshopManuals.co.uk

# EVAPORATIVE EMISSION CONTROL SYSTEM

## GENERAL INFORMATION

The evaporative emission control system prevents fuel vapours generated in the fuel tank from escaping into the atmosphere.
Fuel vapours from the fuel tank flow through the fuel tank pressure control valve and vapour pipe/hose to be stored temporarily in the canister.
When driving the vehicle, fuel vapours stored in the canister flow through the purge solenoid and purge port and go into the intake manifold to be sent to the combustion chamber.
When the engine coolant temperature is low or when the intake air quantity is small (when the engine is at idle, for example), the engine control unit turns the purge solenoid off to shut off the fuel vapour flow to the intake manifold.
This does not only insure the driveability when the engine is cold or running under low load but also stabilize the emission level.

## SYSTEM DIAGRAM

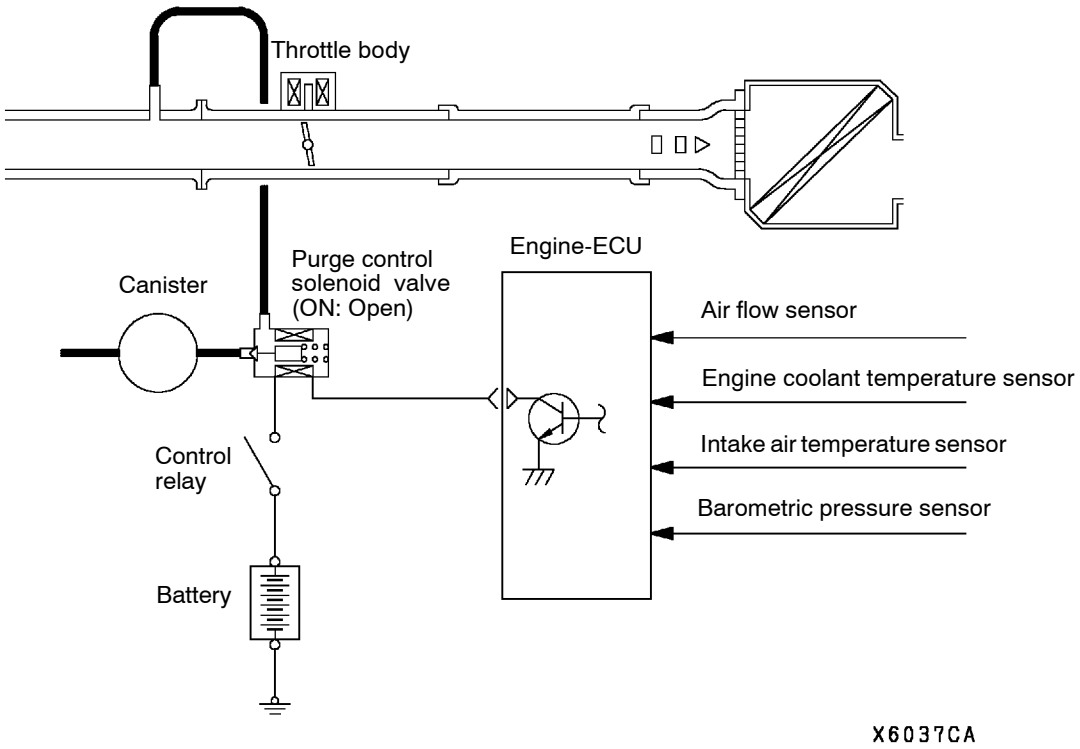


## COMPONENT LOCATION

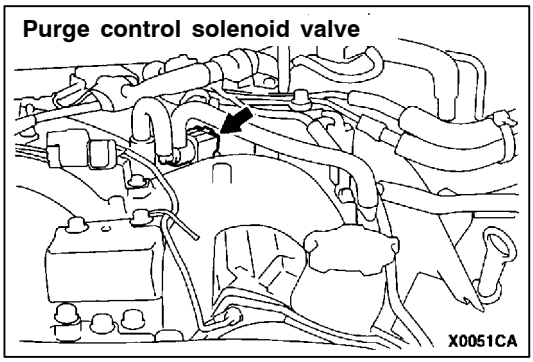


Purchased from www.WorkshopManuals.co.uk

www.WorkshopManuals.co.uk

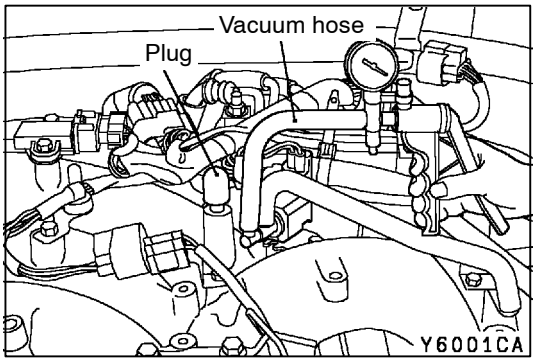


## PURGE CONTROL SYSTEM CHECK

1. Disconnect the vacuum hose from the intake manifold and connect it to a hand vacuum pump.
2. Plug the nipple from which the vacuum hose was removed.
3. When the engine is cold or hot, apply a vacuum of 53 kPa, and check the condition of the vacuum.

**When engine is cold**
**(Engine coolant temperature: 40°C or less)**

| Engine condition | Normal condition |
|---|---|
| At idle | Vacuum is maintained. |
| 3,000 r/min | |

**When engine is hot**
**(Engine coolant temperature: 80°C or higher)**

| Engine condition | Normal condition |
|---|---|
| ● At idle<br>● for approximately 6 minutes after the engine is started. | Vacuum is maintained. |
| ● 3,000 r/min<br>● for approximately 3 minutes after the engine is started. | Vacuum will leak. |

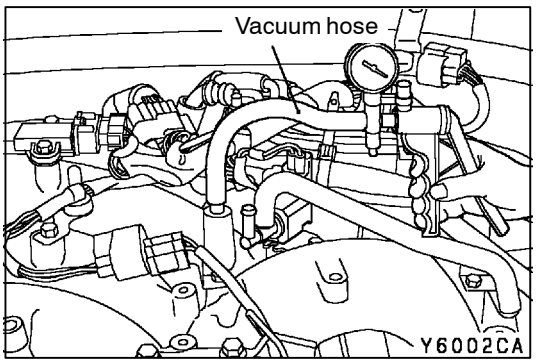


## PURGE PORT VACUUM CHECK

1. Disconnect the vacuum hose from the intake manifold purge vacuum nipple and connect a hand vacuum pump to the nipple.

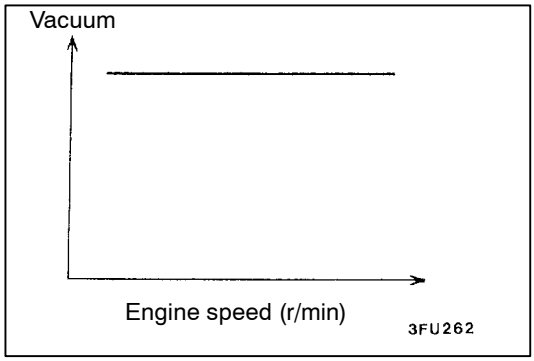


2. Start the engine and check that the vacuum remains fairly constant after racing the engine.

   NOTE
   If vacuum changes, it is possible that the throttle body purge port may be clogged and require cleaning.

Purchased from www.WorkshopManuals.co.uk

www.WorkshopManuals.co.uk

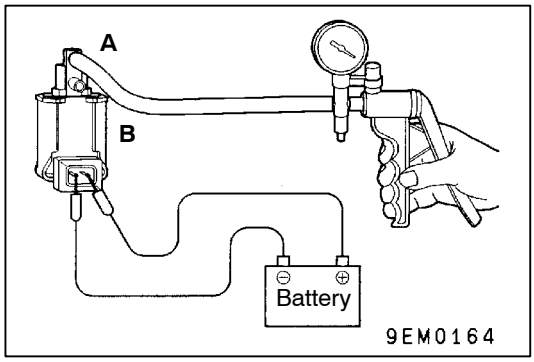


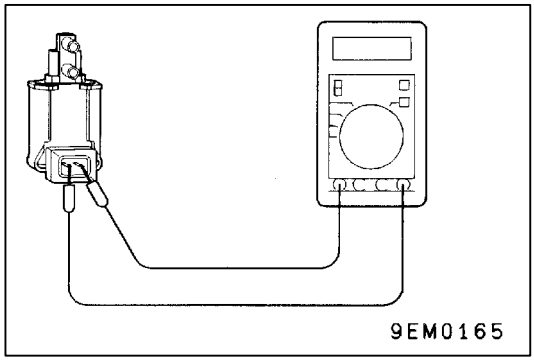


## PURGE CONTROL SOLENOID VALVE CHECK

NOTE
When disconnecting the vacuum hose, always make a mark so that it can be reconnected at original position.

1. Disconnect the vacuum hose from the solenoid valve.
2. Disconnect the harness connector.
3. Connect a hand vacuum pump to nipple (A) of the solenoid valve (refer to the illustration at left).
4. Check airtightness by applying a vacuum with voltage applied directly from the battery to the purge control solenoid valve and without applying voltage.

| Battery voltage | Normal condition |
|---|---|
| Applied | Vacuum leaks |
| Not applied | Vacuum maintained |

5. Measure the resistance between the terminals of the solenoid valve.

   **Standard value: 30 - 34 Ω (at 20°C)**

Purchased from www.WorkshopManuals.co.uk

www.WorkshopManuals.co.uk

# EXHAUST GAS RECIRCULATION (EGR) SYSTEM

## GENERAL INFORMATION

The exhaust gas recirculation (EGR) system lowers the nitrogen oxide (NOx) emission level. When the air/fuel mixture combustion temperature is high, a large quantity of nitrogen oxides (NOx) is generated in the combustion chamber. Therefore, this system recirculates part of emission gas from the exhaust port of the cylinder head to the combustion chamber through the intake manifold to decrease the air/fuel mixture combustion temperature, resulting in reduction of NOx.
The EGR flow rate is controlled by the EGR valve so as not to decrease the driveability.

## OPERATION

The EGR valve is being closed and does not recirculate exhaust gases under one of the following conditions. Otherwise, the EGR valve is opened and recirculate exhaust gases.

- The engine coolant temperature is low.
- The engine is at idle.
- The throttle valve is widely opened.

## SYSTEM DIAGRAM

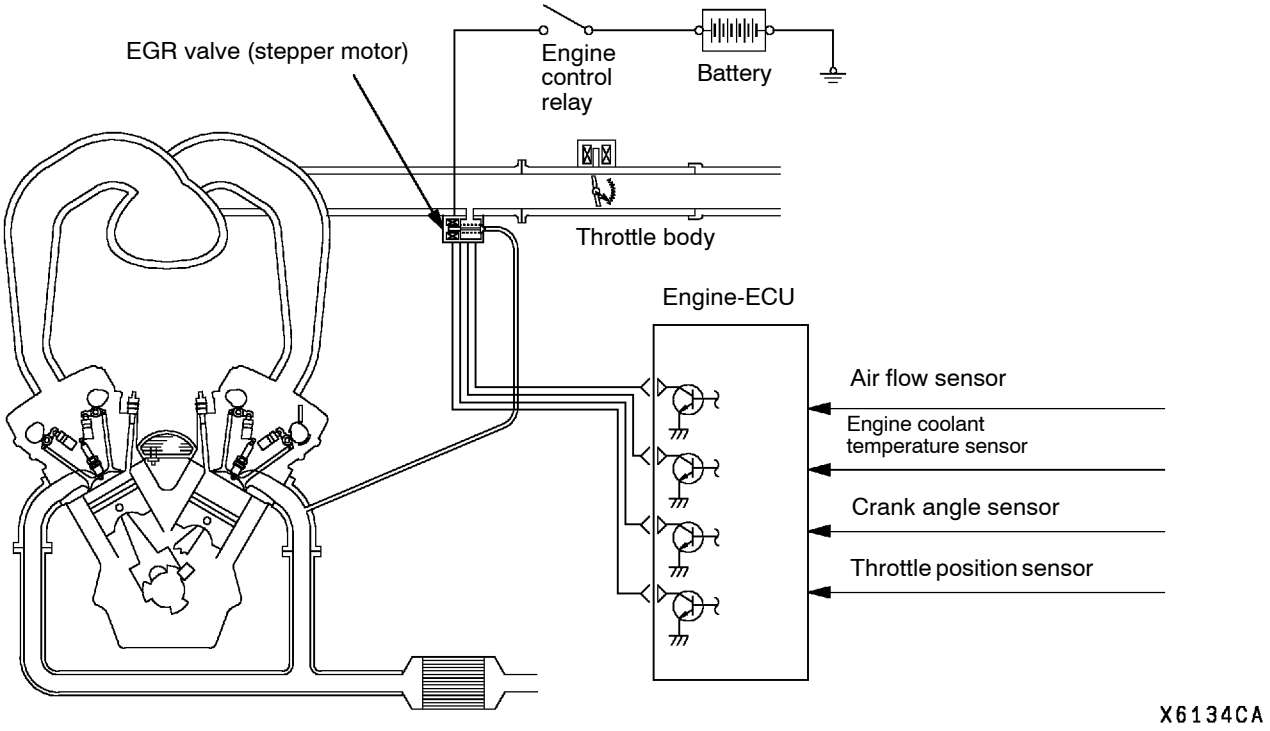


## COMPONENT LOCATION

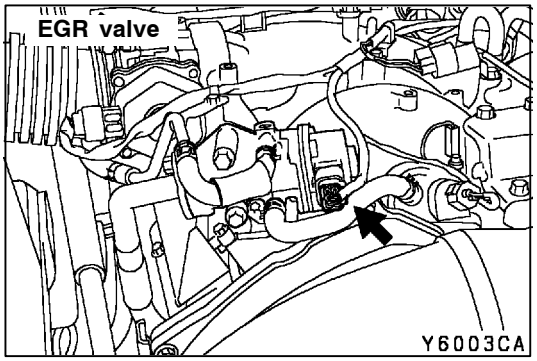


Purchased from www.WorkshopManuals.co.uk

www.WorkshopManuals.co.uk

## EXHAUST GAS RECIRCULATION (EGR) CONTROL SYSTEM CHECK

Refer to GROUP 13 - Troubleshooting.

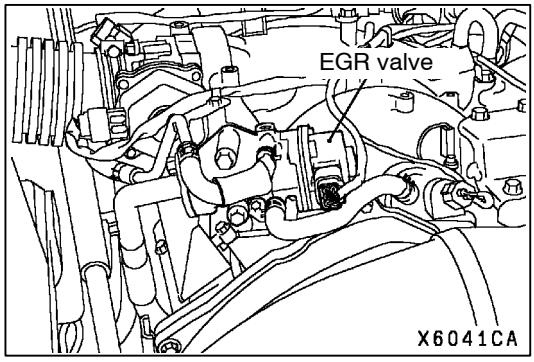


## EGR VALVE (STEPPER MOTOR) CHECK

### Checking the Operation Sound

1. Check that the operation sound of the stepper motor can be heard from the EGR valve when the ignition switch is turned to ON (without starting the engine).
2. If the operation sound cannot be heard, check the stepper motor drive circuit.

   NOTE
   If the circuit is normal, the cause is probably a malfunction of the stepper motor or of the engine-ECU.

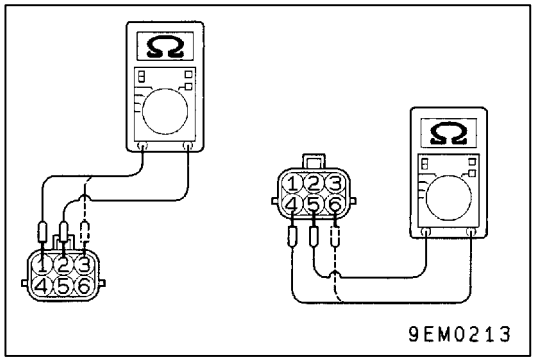


### Checking the Coil Resistance

1. Disconnect the EGR valve connector.
2. Measure the resistance between the EGR valve-side connector terminal No.2 and terminal No.1 or terminal No.3.

   **Standard value: 10 - 20 Ω (at 20°C)**
3. Measure the resistance between the EGR valve-side connector terminal No.5 and terminal No.4 or terminal No.6.

   **Standard value: 10 - 20 Ω (at 20°C)**

Purchased from www.WorkshopManuals.co.uk

www.WorkshopManuals.co.uk

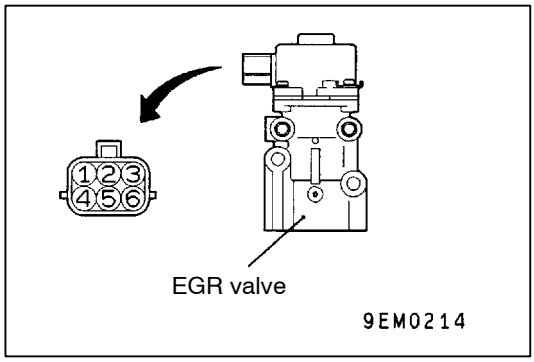


**Operation Check**

1. Remove the EGR valve.
2. Connect the special tool (test harness: MB991658) to the EGR valve-side connector.
3. Connect terminal No.2 to the positive (+) terminal of the battery.
4. Connect terminal No.1 and terminal No.3 to the negative (-) terminal of battery to test if any vibration occurs (as though the stepper motor is shaking slightly) due to the operation of the stepper motor.
5. Connect terminal No.5 to the positive (+) terminal of battery.

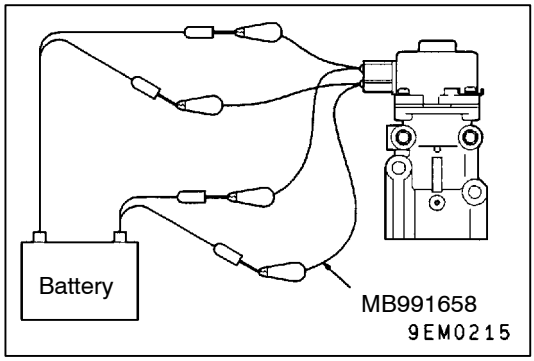


6. Connect terminal No.4 and terminal No.6 to the negative (-) terminal of battery to test if any vibration occurs (as though the stepper motor is shaking slightly) due to the operation of the stepper motor.
7. If the results of testing show that the vibration could be felt, the stepper motor is normal.

Purchased from www.WorkshopManuals.co.uk

www.WorkshopManuals.co.uk

# EGR VALVE

## REMOVAL AND INSTALLATION

**Pre-removal Operation**
- Engine Coolant Draining and Refilling (Refer to GROUP 14 - On-vehicle Service.)
- Engine Cover Removal and Installation (Refer to GROUP 11A - Timing Belt.)
- Air Cleaner Assembly Removal and Installation (Refer to GROUP 15)

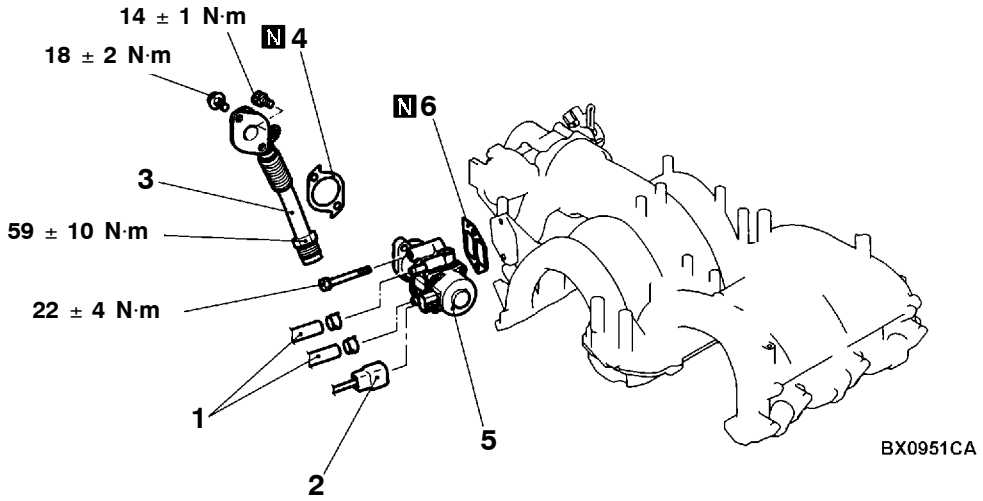


**Removal steps**
1. Water hose connection
2. EGR valve connector
3. EGR pipe
4. EGR pipe gasket
5. EGR valve
▶A◀ 6. EGR valve gasket

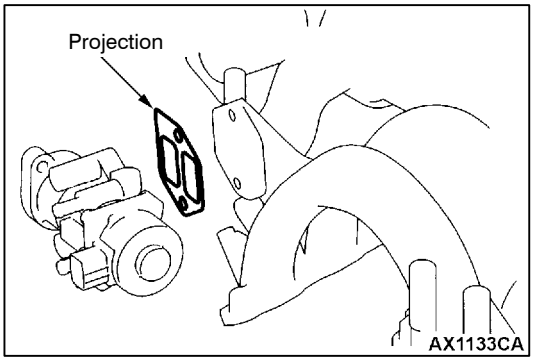


## INSTALLATION SERVICE POINT

### ▶A◀ EGR VALVE GASKET INSTALLATION

Install the gasket so that its projection faces towards the direction shown.

Purchased from www.WorkshopManuals.co.uk

www.WorkshopManuals.co.uk

# CANISTER

## REMOVAL AND INSTALLATION

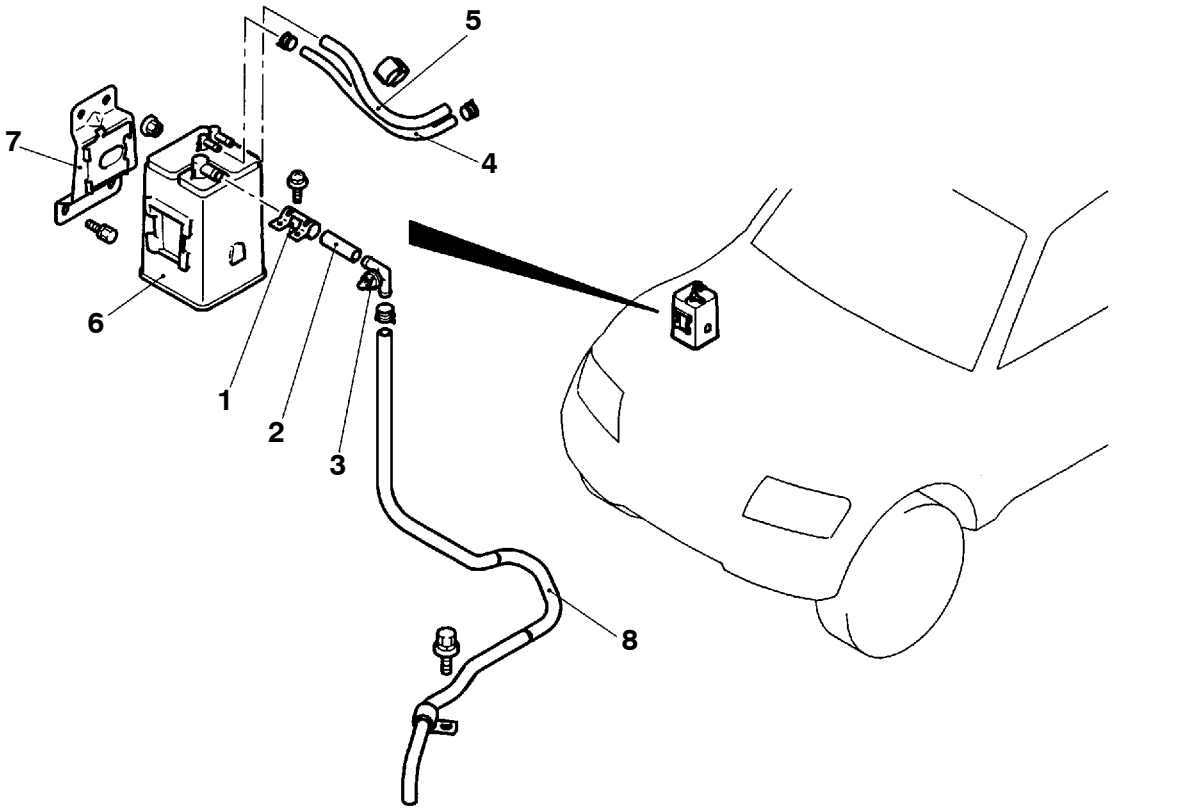


**Removal steps**

1. Hose clip
2. Vapor hose
3. Breather valve
4. Vapor hose connection
5. Purge hose connection
6. Canister
7. Canister bracket

Purchased from www.WorkshopManuals.co.uk

www.WorkshopManuals.co.uk

# CATALYTIC CONVERTER

## GENERAL INFORMATION

The three-way catalytic converter, together with the closed loop air-fuel ratio control based on the oxygen sensor signal, oxidizes carbon monoxides (CO) and hydrocarbons (HC) and reduces nitrogen oxides (NOx).

When the mixture is controlled at stoichiometric air-fuel ratio, the three-way catalytic converter provides the highest purification against the three constituents, namely, CO, HC and NOx.

## REMOVAL AND INSTALLATION

**Pre-removal and Post-installation Operation**
Under Cover Removal and Installation

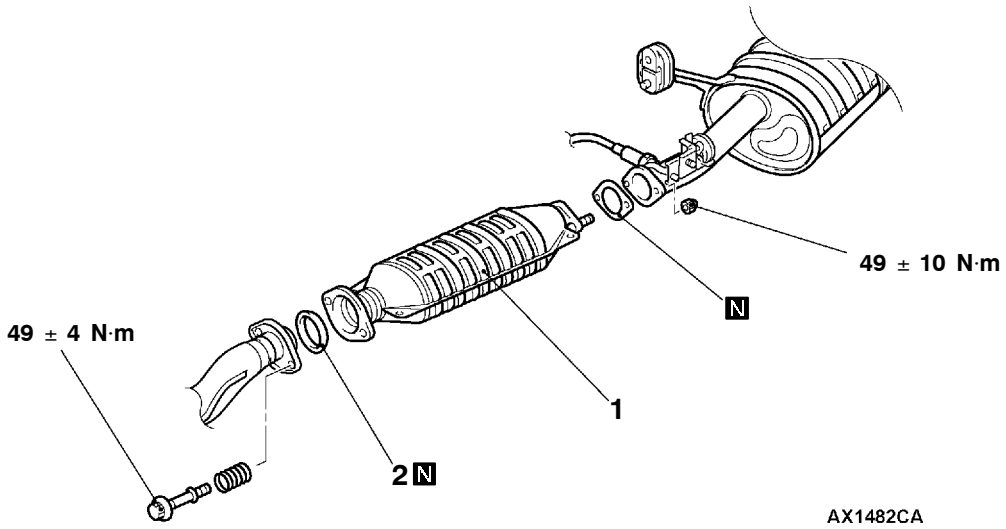


**Removal steps**

1. Catalytic converter
2. Seal ring

Purchased from www.WorkshopManuals.co.uk

www.WorkshopManuals.co.uk

# EMISSION CONTROL SYSTEM <4D5>

## GENERAL INFORMATION

The electronically-controlled EGR system and the fuel injection timing control system (load timer) reduce the level of exhaust gases ($NO_x$).

| Items | Name | Specification |
|---|---|---|
| Exhaust emission control system | Exhaust gas recirculation system<br>● EGR valve<br>● EGR solenoid valve No.1<br>● EGR solenoid valve No.2 | Electronically-controlled EGR system<br>Single type<br>Duty cycle solenoid valve<br>ON-OFF solenoid valve |

## SERVICE SPECIFICATIONS

| Items | | Standard value |
|---|---|---|
| EGR solenoid valve Nos. 1 and 2 resistance (at 20°C) Ω | | 36 - 44 |
| Lever position sensor output voltage V | Idle position | 0.8 - 1.0 |
| | Fully open | 3.7 - 4.9 |
| Engine speed sensor resistance kΩ | | 1.3 - 1.9 |
| Engine coolant temperature sensor resistance (Built-in engine coolant temperature gauge unit) kΩ | At 0°C | 7.7 - 9.5 |
| | At 20°C | 2.9 - 3.6 |
| | At 40°C | 1.3 - 1.7 |
| | At 80°C | 0.26 - 0.35 |

## SEALANT

| Item | Specified sealant | Remark |
|---|---|---|
| Engine coolant temperature gauge unit threaded portion | 3M Nut Locking Part No. 4171 or equivalent | Drying sealant |

## SPECIAL TOOL

| Tool | Number | Name | Use |
|---|---|---|---|
| 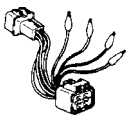 | MD998464 | Test harness (4P, square) | Inspection of lever position sensor |

Purchased from www.WorkshopManuals.co.uk

www.WorkshopManuals.co.uk

# EXHAUST GAS RECIRCULATION (EGR) SYSTEM

## GENERAL INFORMATION

The electronically-controlled EGR system consists of an EGR valve, a vacuum pump, EGR solenoid valves Nos.1 and 2, glow & EGR control unit and various sensors.
The EGR valve is controlled by the negative pressure inside the valve, which is controlled by EGR solenoid valves Nos.1 and 2.

The EGR solenoid valves Nos.1 and 2 are optimally controlled by the glow & EGR control unit in response to the engine operation conditions, based on data received from each sensor.
In this way, the EGR is controlled to reduce NOx emissions while maintaining good engine performance.

## SYSTEM DIAGRAM

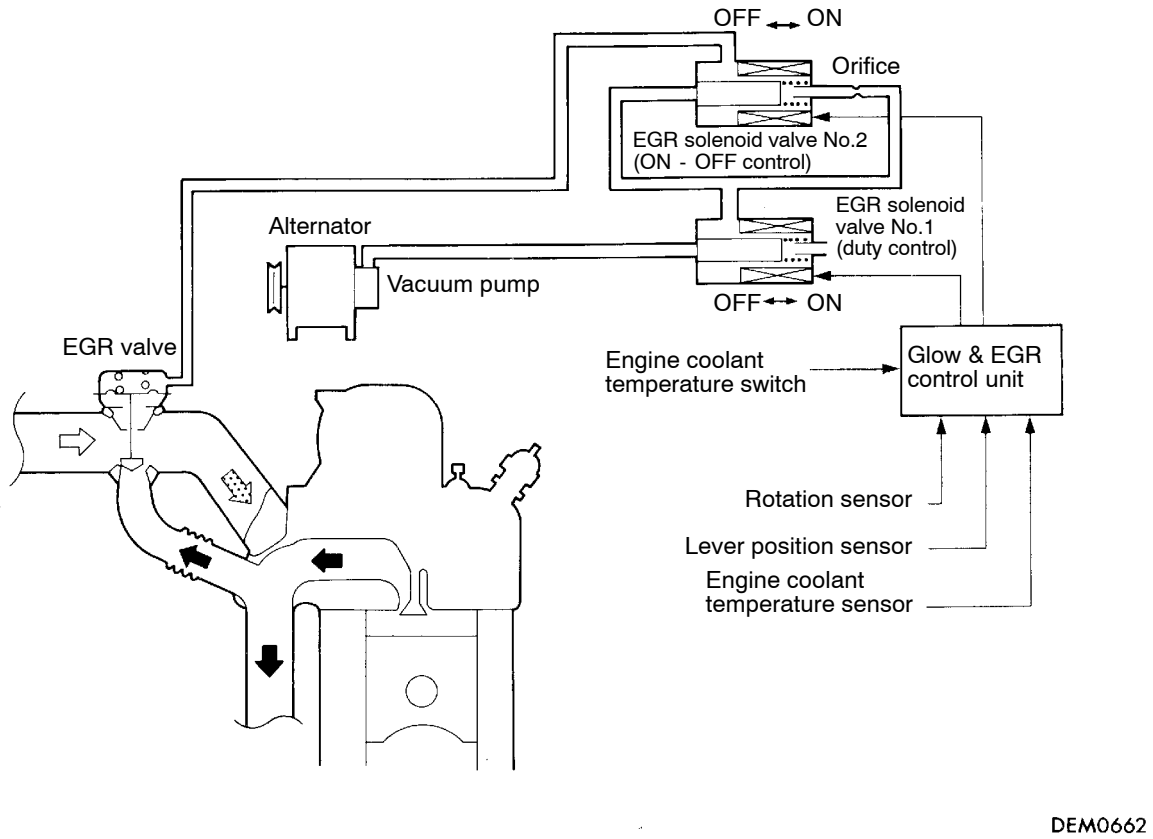


## COMPONENT LOCATION

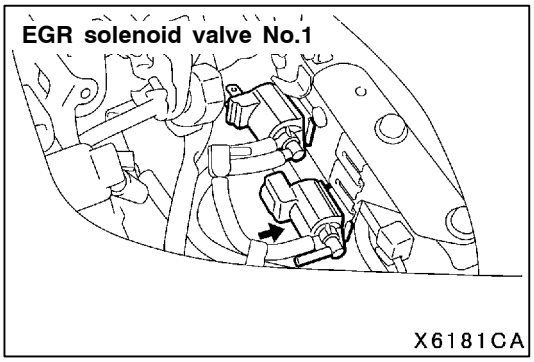


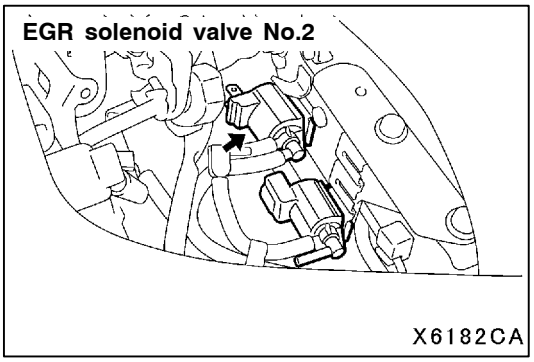


Purchased from www.WorkshopManuals.co.uk

www.WorkshopManuals.co.uk

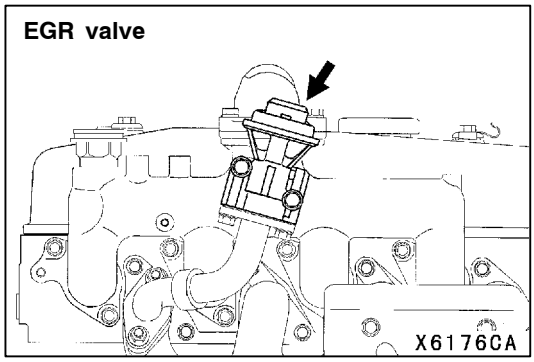


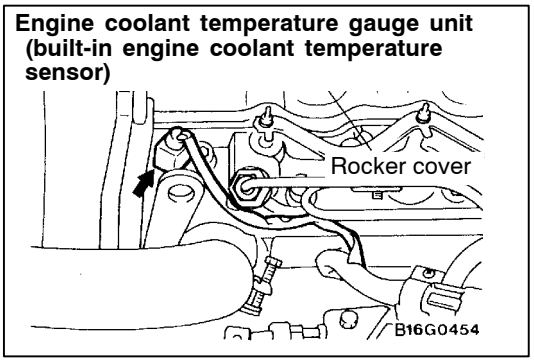


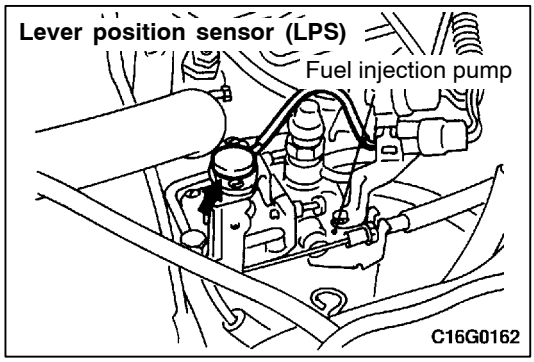


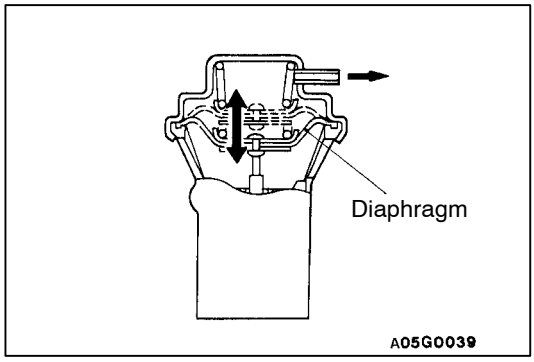


## FUNCTION CHECK

1. Start the engine and warm it up until the engine coolant temperature reaches 65°C or above.
2. Race the engine by suddenly depressing the accelerator pedal, then check that the EGR valve diaphragm lifts.

## EGR SOLENOID VALVE OPERATION CHECK

1. Remove EGR solenoid valve Nos.1 and 2 connectors and vacuum hoses.
2. Attach a vacuum pump to each nipple of the EGR solenoid valve Nos. 1 and 2 connectors and apply negative pressure. Check that the valves are airtight both when voltage is applied to each terminal of the EGR solenoid valve Nos. 1 and 2 and when it is not applied.

Purchased from www.WorkshopManuals.co.uk

www.WorkshopManuals.co.uk

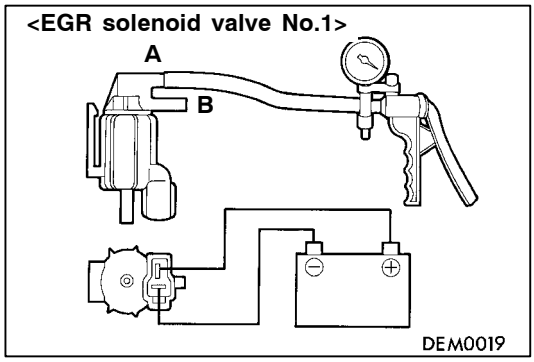


### EGR solenoid valve No.1

| | |
|---|---|
| Battery voltage | Normal condition |
| When current is flowing | Vacuum leaks (Vacuum is maintained when nipple B is plugged) |
| When current is not flowing | Vacuum is maintained |

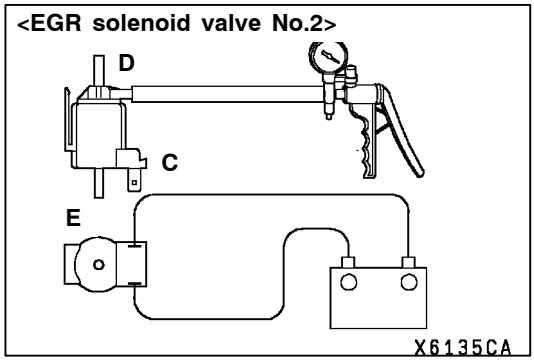


### EGR solenoid valve No.2

| | |
|---|---|
| Battery voltage | Normal condition |
| When current is flowing | Vacuum leaks (Vacuum is maintained when nipple D is plugged) |
| When current is not flowing | Vacuum leaks (Vacuum is maintained when nipple E is plugged) |

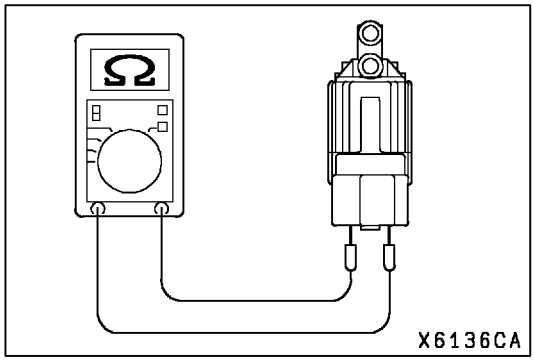


## EGR SOLENOID VALVE RESISTANCE CHECK

Measure terminal resistance of EGR solenoid valves Nos. 1 and 2 with a circuit tester.

**Standard value: 36 - 44 Ω (at 20°C)**

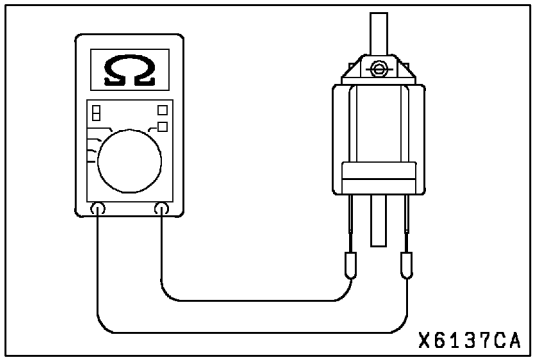


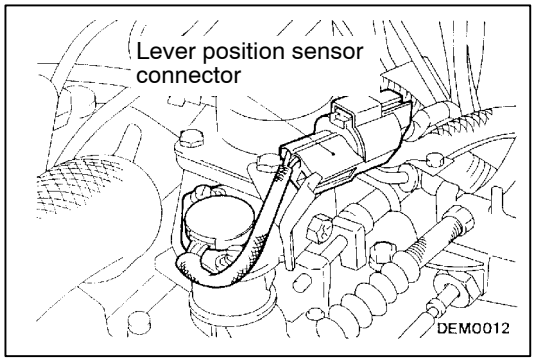


## LEVER POSITION SENSOR (LPS) ADJUSTMENT

1. Run the engine until the engine coolant temperature reaches to 80°C or above, and then release the fast idle.
2. Loosen the accelerator cable tension sufficiently.
3. Connect the special tool (test harness) to the lever position sensor connector, as shown.

Purchased from www.WorkshopManuals.co.uk

www.WorkshopManuals.co.uk

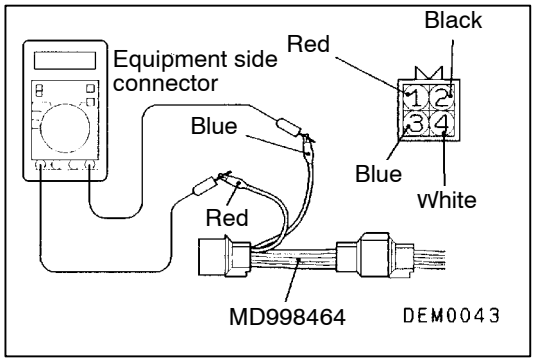


4. Connect a digital-type voltmeter between lever position sensor terminals 1 (red clip) and 3 (blue clip).
5. Turn the ignition switch to “ON”. (Do not start the engine.)
6. Measure output voltage of the lever position sensor.

**Standard value:**

| Lever condition | Voltage V |
|---|---|
| Idle position | 0.8 - 1.0 |
| Fully open | 3.7 - 4.9 |

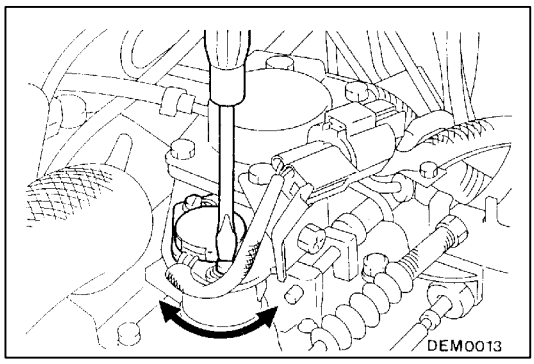


7. If the voltage is outside the standard value, adjust by loosening the lever position sensor mounting screw and turning the lever position sensor body. After adjustment, tighten the screw.

   NOTE
   Voltage increases when the lever position sensor body is turned clockwise.
8. Turn the ignition switch off.
9. Adjust the accelerator cable play.

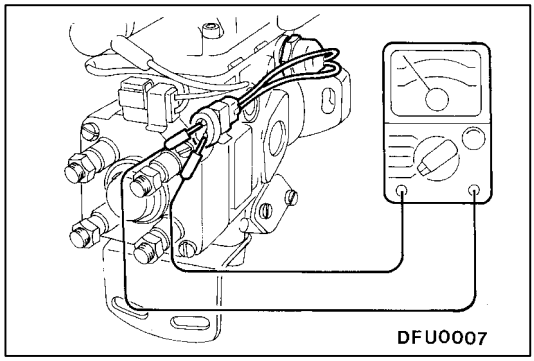


## ENGINE SPEED SENSOR CHECK

1. Disconnect the engine speed sensor connector.
2. Measure resistance between the engine speed sensor terminals.

   **Standard value: 1.3 - 1.9 kΩ**

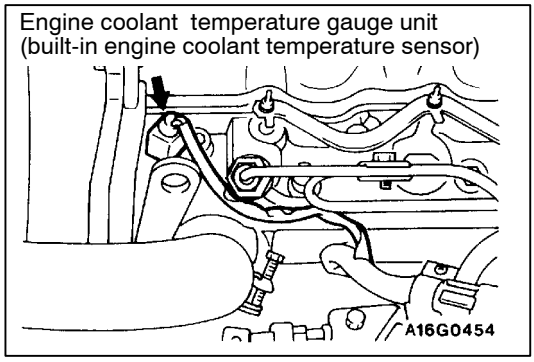


## ENGINE COOLANT TEMPERATURE SENSOR CHECK

1. Remove the engine coolant temperature gauge unit.

Purchased from www.WorkshopManuals.co.uk

www.WorkshopManuals.co.uk

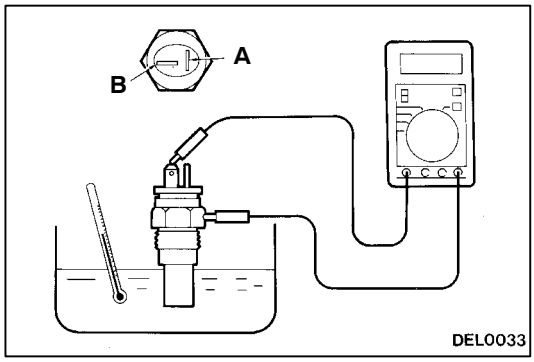


2. Measure resistance between terminal (B) and the body earth when the temperature sensing portion of the engine coolant temperature gauge unit is immersed in hot water.

| Temperature (°C) | Resistance (kΩ) |
|---|---|
| 0 | 7.7 - 9.5 |
| 20 | 2.9 - 3.6 |
| 40 | 1.3 - 1.7 |
| 80 | 0.26 - 0.35 |

3. If the resistance deviates from the standard value greatly, replace the gauge unit.
4. Apply sealant to the threaded portion.

   **Specified sealant:**
   **3M NUT Locking Part No. 4171 or equivalent**

5. Install the engine coolant temperature gauge unit and tighten it to the specified torque.

   **Sensor tightening torque: 35 Nm**

6. Connect the wiring harness connectors.

Purchased from www.WorkshopManuals.co.uk

www.WorkshopManuals.co.uk

# CHECK AT THE GLOW & EGR CONTROL UNIT

## TERMINAL VOLTAGE CHECK CHART

### Glow & EGR Control Unit Connector Terminal Arrangement

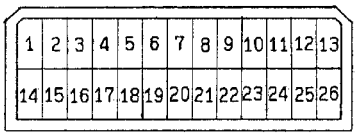


DEM0029

| Terminal No. | Check item | Check condition (Engine condition) | | Normal condition |
|---|---|---|---|---|
| 3 | EGR solenoid valve No.1 | Ignition switch: ON | | Battery voltage |
| | | While engine is idle after having warmed up, suddenly depress the accelerator pedal. | | Momentarily increases |
| 6 | Lever position sensor | Ignition switch: ON | Set throttle lever to idle position | 0.8 - 1.0 V |
| | | | Fully open throttle lever | 3.7 - 4.9 V |
| 7 | Sensor impressed voltage | Ignition switch: ON | | 4.8 - 5.2 V |
| 16 | EGR solenoid valve No.2 | Ignition switch: ON | | Battery voltage |
| | | While engine is idle after having warmed up, suddenly depress the accelerator pedal. | | Momentarily decreases |

## HARNESS-SIDE CONNECTOR TERMINAL RESISTANCE AND CONTINUITY CHECK CHART

### Glow & EGR Control Unit Harness-Side Connector Terminal Arrangement

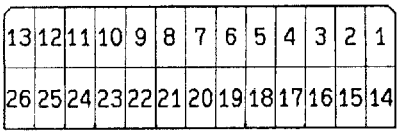


DEM0026

| Terminal No. | Check item | Normal condition (Check condition) |
|---|---|---|
| 3 - 1 | EGR solenoid valve No.1 | 36 - 44 Ω (At 20°C) |
| 5 - Body earth | Engine coolant temperature sensor | 7.7 - 9.5 kΩ (Coolant temperature at 0°C) |
| | | 2.9 - 3.6 kΩ (Coolant temperature at 20°C) |
| | | 1.3 - 1.7 kΩ (Coolant temperature at 40°C) |
| | | 0.26 - 0.35 kΩ (Coolant temperature at 80°C) |
| 11 - 24 | Engine speed sensor | 1.3 - 1.9 kΩ |
| 16 - 1 | EGR solenoid valve No.2 | 36 - 44 Ω (At 20°C) |

Purchased from www.WorkshopManuals.co.uk

www.WorkshopManuals.co.uk

# EMISSION CONTROL SYSTEM <4M4-VEHICLES WITH EGR>

## GENERAL INFORMATION

The electronically-controlled EGR system and the fuel injection timing control system (load timer) reduce the level of exhaust gases ($NO_X$).

| Items | Name | Specification |
|---|---|---|
| Exhaust emission control system | Exhaust gas recirculation system<br>● EGR valve<br>● EGR solenoid valve No.1<br>● EGR solenoid valve No.2 | Electronically-controlled EGR system<br>Single type<br>Duty cycle solenoid valve<br>ON-OFF solenoid valve |

## SERVICE SPECIFICATIONS

| Items | Standard value |
|---|---|
| EGR solenoid valve No.1/No. 2 resistance (at 20°C) Ω | 36 - 44 |

Purchased from www.WorkshopManuals.co.uk

www.WorkshopManuals.co.uk

# EXHAUST GAS RECIRCULATION (EGR) SYSTEM

## GENERAL INFORMATION

The electronically-controlled EGR system consists of an EGR valve, vacuum pump, EGR solenoid valves No. 1 and No. 2, glow & EGR control unit and various sensors.
The EGR valve is controlled by the negative pressure inside the valve, which is controlled by EGR solenoid valves No. 1 and No. 2.

The EGR solenoid valves No.1 and No. 2 are optimally controlled by the glow & EGR control unit in response to the engine operation conditions, based on data input from each of the sensors.
In this way, the EGR is controlled to reduce $NO_x$ emissions while maintaining good engine performance.

## SYSTEM DIAGRAM

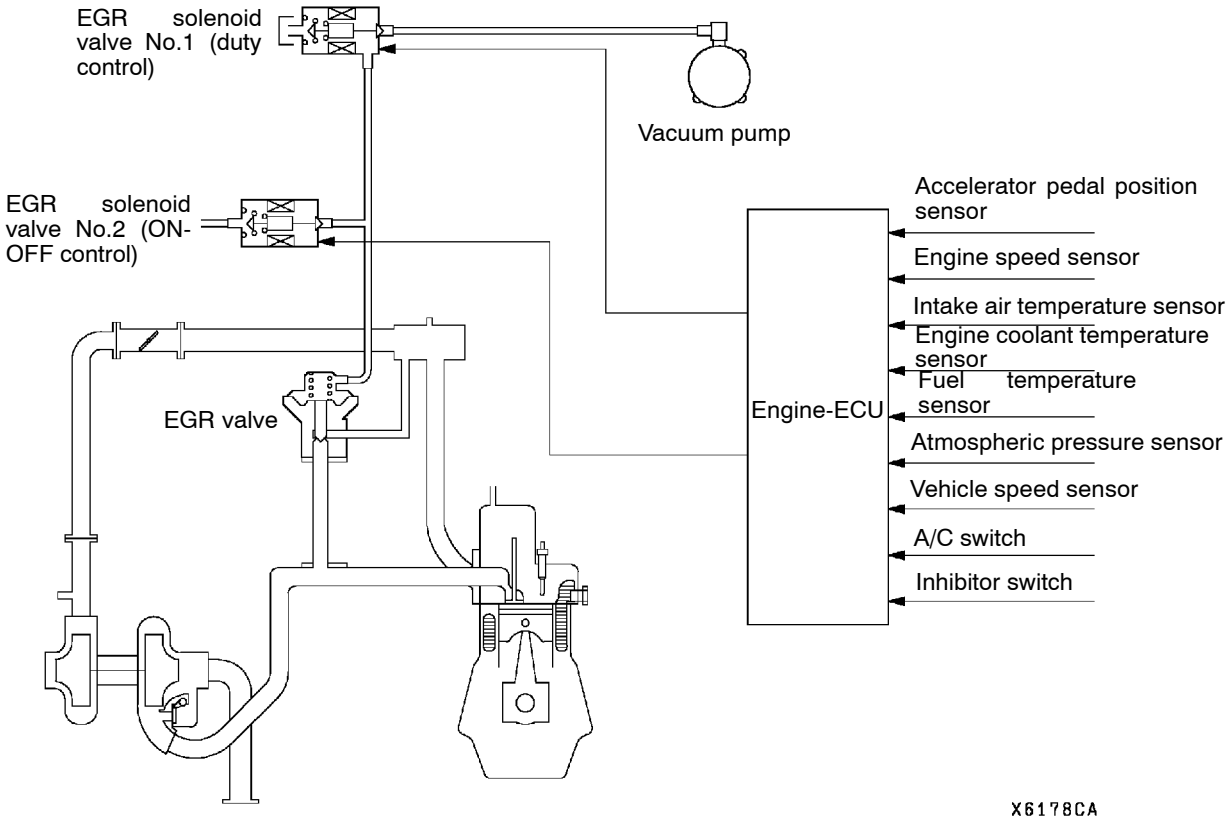


## COMPONENT LOCATION

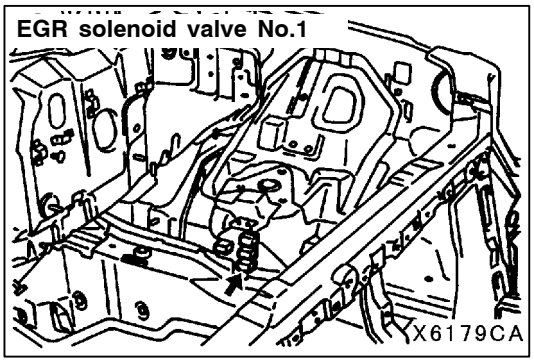


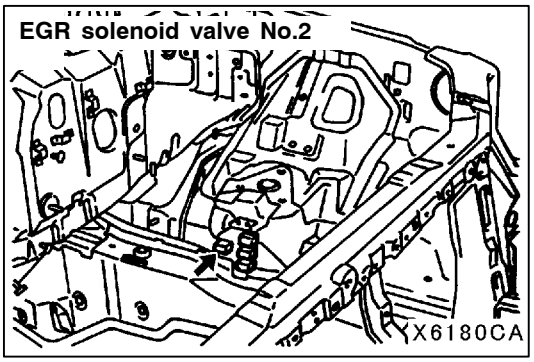


Purchased from www.WorkshopManuals.co.uk

www.WorkshopManuals.co.uk

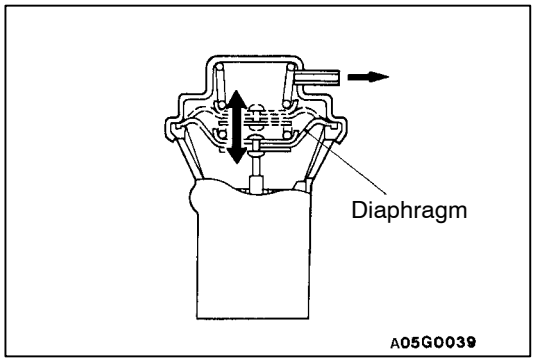


## FUNCTION CHECK

1. Start the engine and warm it up until the engine coolant temperature reaches 65°C or above.
2. Turn the A/C switch “OFF”.
3. Place the selector lever in P range.

4.Check the operation of the EGR valve.

**Normal condition:**

| Engine condition | EGR valve condition |
|---|---|
| Idling without any load | Open |
| Sudden racing | Closed (Diaphragm lowers) |

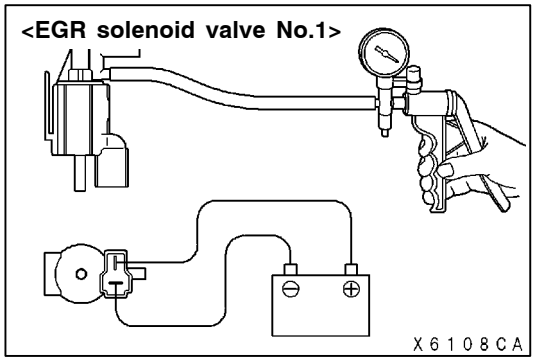


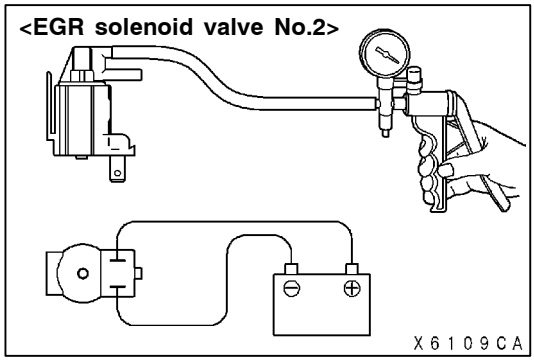


## EGR SOLENOID VALVE OPERATION CHECK

1. Attach a vacuum pump to each nipple of the EGR solenoid valves as shown and apply negative pressure.
2. Check that the valves are airtight both when voltage is applied to each terminal of the EGR solenoid valve and when it is not applied.

**EGR solenoid valve No.1**

| Battery voltage | Normal condition |
|---|---|
| When current is flowing | Vacuum leaks (Vacuum is maintained when nipple A is plugged). |
| When current is not flowing | Vacuum leaks (Vacuum is maintained when nipple B is plugged). |

**EGR solenoid valve No.2**

| Battery voltage | Normal condition |
|---|---|
| When current is flowing | Vacuum leaks (Vacuum is maintained when nipple C is plugged). |
| When current is not flowing | Vacuum is maintained. |

Purchased from www.WorkshopManuals.co.uk

www.WorkshopManuals.co.uk

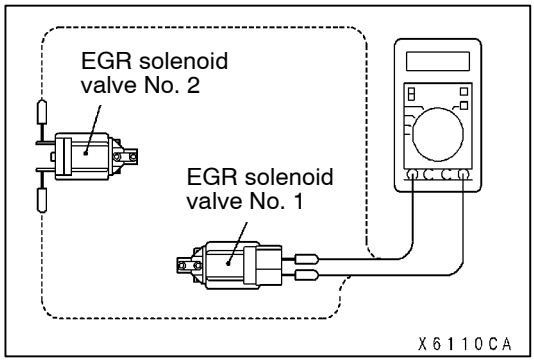


## EGR SOLENOID VALVE RESISTANCE CHECK

Measure the resistance between the terminals of the solenoid valve.

**Standard value: 36 - 44 Ω (at 20°C)**

## ACCELERATOR PEDAL POSITION SENSOR (APS), ENGINE COOLANT TEMPERATURE SENSOR, INTAKE AIR TEMPERATURE SENSOR, FUEL TEMPERATURE SENSOR CHECK

Refer to GROUP 13C - On-vehicle Service.

## CHECK AT ENGINE-ECU

Refer to GROUP 13C - Troubleshooting.

# CATALYTIC CONVERTER

## GENERAL INFORMATION

The three-way catalytic converter, together with the closed loop air-fuel ratio control based on the oxygen sensor signal, oxidizes carbon monoxides (CO) and hydrocarbons (HC) and reduces nitrogen oxides (NOx).

When the mixture is controlled at stoichiometric air-fuel ratio, the three-way catalytic converter provides the highest purification against the three constituents, namely, CO, HC and NOx.

## REMOVAL AND INSTALLATION

**Pre-removal and Post-installation Operation**
Under Cover Removal and Installation

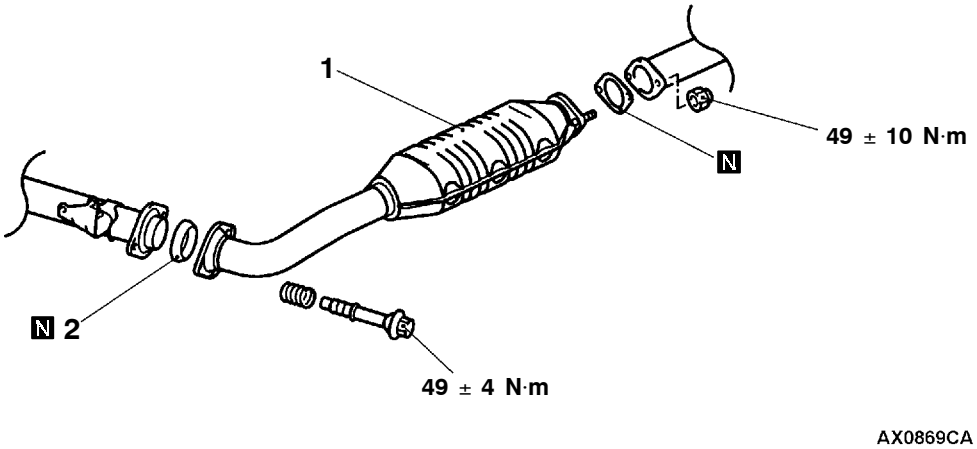


**Removal steps**

1. Catalytic converter
2. Seal ring

Purchased from www.WorkshopManuals.co.uk

www.WorkshopManuals.co.uk

**NOTES**

Purchased from www.WorkshopManuals.co.uk

www.WorkshopManuals.co.uk


# ENGINE AND EMISSION CONTROL

## CONTENTS


ENGINE CONTROL SYSTEM ..... 2

GENERAL ..... 2

Outline of Change ..... 2

EMISSION CONTROL SYSTEM <4D5-STEP III> ..... 2

GENERAL ..... 2

Outline of Changes ..... 2

GENERAL INFORMATION ..... 2

SERVICE SPECIFICATIONS ..... 2

EXHAUST GAS RECIRCULATION (EGR) SYSTEM ..... 3

EGR VALVE AND EGR COOLER ..... 6

CATALYTIC CONVERTER ..... 8

EMISSION CONTROL SYSTEM <4M4> ..... 9

GENERAL ..... 9

Outline of Change ..... 9

SERVICE SPECIFICATIONS ..... 9

EXHAUST GAS RECIRCULATION (EGR) SYSTEM ..... 9

EGR VALVE AND EGR COOLER ..... 11


Purchased from www.WorkshopManuals.co.uk

www.WorkshopManuals.co.uk

# ENGINE CONTROL SYSTEM

## GENERAL

### OUTLINE OF CHANGE

Electronic-controlled throttle valve system has been used instead of a conventional cable-type accelerator mechanism <4D5>.
Its service procedure is the same as for previous models with 6G7 or 4M4 engine.

# EMISSION CONTROL SYSTEM <4D5-STEP III>

## GENERAL

### OUTLINE OF CHANGES

Some service procedures have been established as the following changes have been made due to the compliance with the Emission Regulation Step III.

- An electronic-controlled EGR valve and EGR cooler have been used.
- A catalytic converter has been added.

## GENERAL INFORMATION

The electronically-controlled EGR system reduces the level of exhaust gases ($NO_x$).

| Items | Name | Specification |
|---|---|---|
| Exhaust emission control system | Exhaust gas recirculation system<br>● EGR valve<br>● EGR solenoid valve No.1<br>● EGR solenoid valve No.2<br>● EGR valve position sensor | Electronically-controlled EGR system<br>Single type<br>ON-OFF solenoid valve<br>ON-OFF solenoid valve<br>Variable resistor type |

## SERVICE SPECIFICATIONS

| Items | Standard value |
|---|---|
| EGR solenoid valve Nos. 1 and 2 resistance (at 20°C) Ω | 36 - 44 |

Purchased from www.WorkshopManuals.co.uk

www.WorkshopManuals.co.uk

# EXHAUST GAS RECIRCULATION (EGR) SYSTEM

## GENERAL INFORMATION

The electronically-controlled EGR system consists of an EGR valve, a vacuum pump, EGR solenoid valves Nos.1 and 2, EGR valve position sensor and engine-ECU.
The EGR valve is controlled by the negative pressure inside the valve, which is controlled by EGR solenoid valves Nos.1 and 2.
In order to obtain EGR amount corresponding to each operating condition, the appropriate opening of the EGR valve is calculated based on the input signal from each sensor.

Feedback control of the EGR solenoid valves No. 1 and No. 2 operation is carried out based on the signal from EGR valve position sensor so that the opening of the EGR valve can be quickly adjusted to the target angle.
In this way, the EGR is controlled to reduce NOx emissions while maintaining good engine performance.

## SYSTEM DIAGRAM

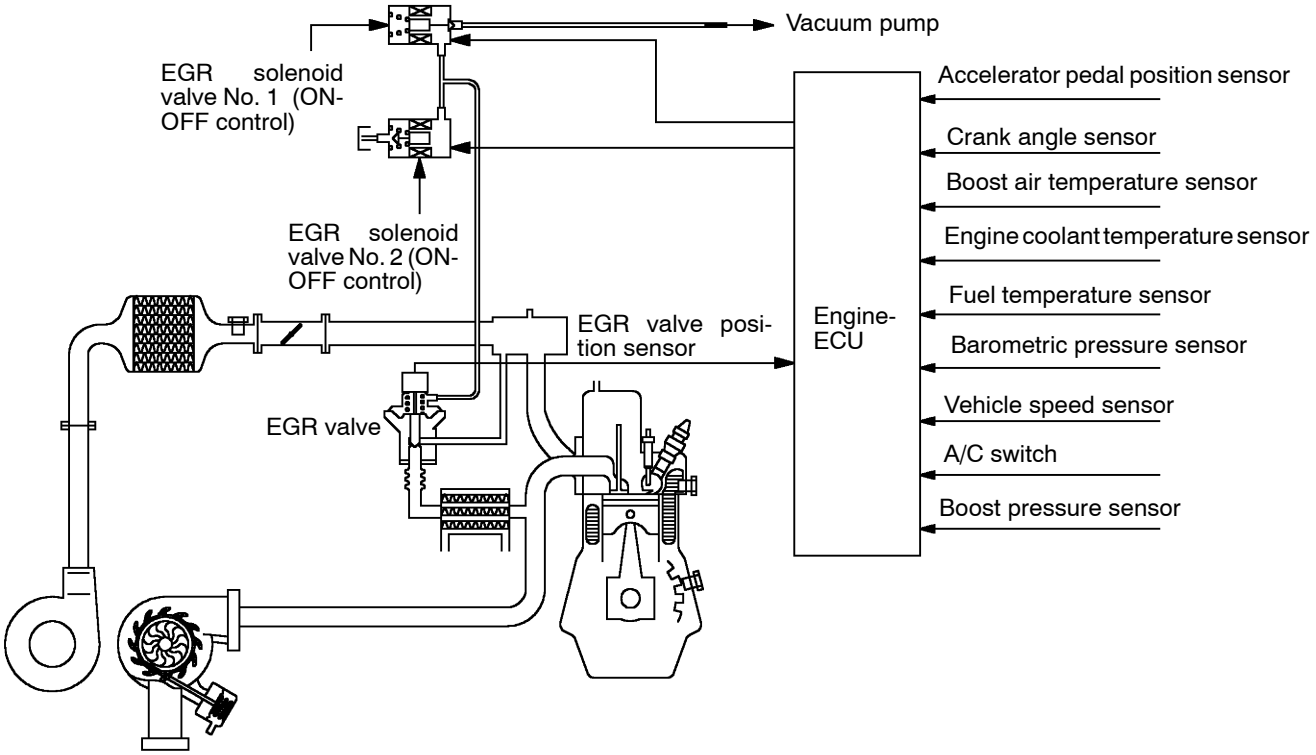


16006CA

## COMPONENT LOCATION

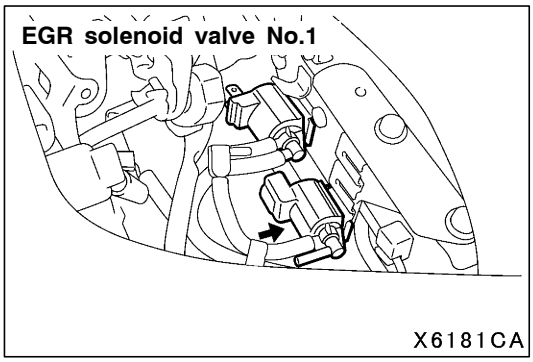


X6181CA

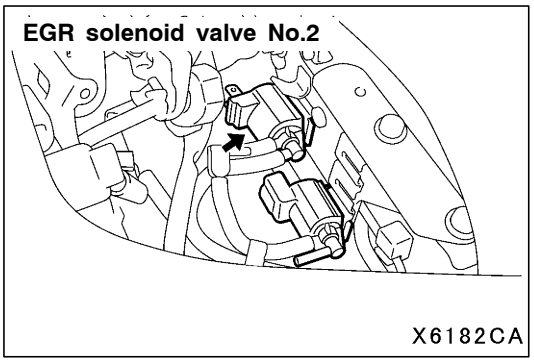


X6182CA

Purchased from www.WorkshopManuals.co.uk

www.WorkshopManuals.co.uk

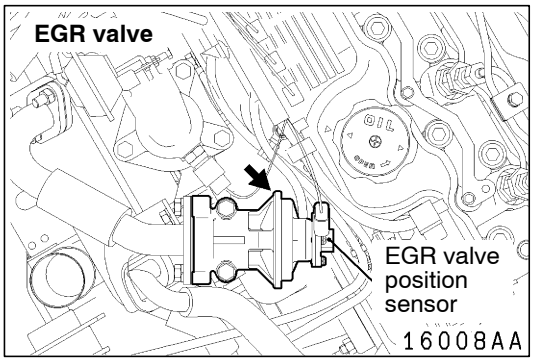


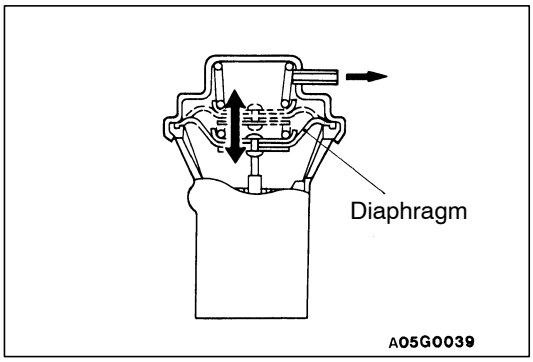


## FUNCTION CHECK

1. Start the engine and warm it up until the engine coolant temperature reaches 65°C or above.
2. Race the engine by suddenly depressing the accelerator pedal, then check that the EGR valve diaphragm lifts.

## EGR SOLENOID VALVE OPERATION CHECK

1. Remove EGR solenoid valve Nos.1 and 2 connectors and vacuum hoses.
2. Attach a vacuum pump to each nipple of the EGR solenoid valve Nos. 1 and 2 and connect each connector of EGR solenoid valve to battery and apply negative pressure. Check that the valves are airtight both when voltage is applied to each terminal of the EGR solenoid valve Nos. 1 and 2 and when it is not applied.

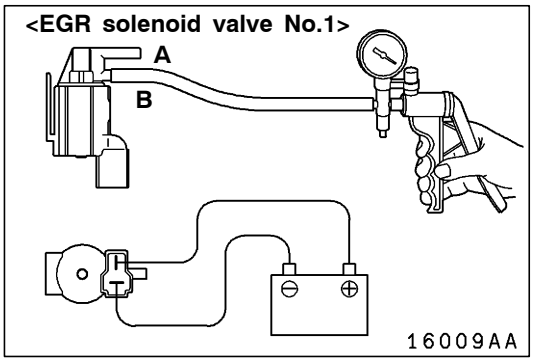


### EGR solenoid valve No.1

| | |
|---|---|
| Battery voltage | Normal condition |
| When current is flowing | Vacuum leaks (Vacuum is maintained when nipple A is plugged) |
| When current is not flowing | Vacuum is maintained |

Purchased from www.WorkshopManuals.co.uk

www.WorkshopManuals.co.uk

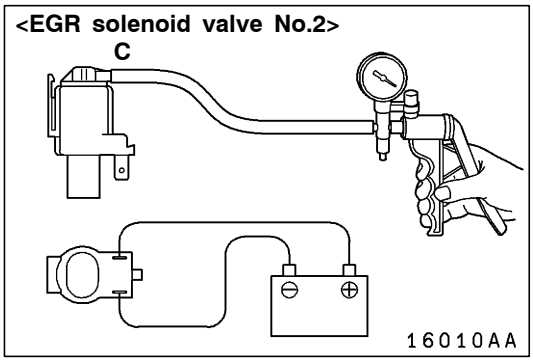


**EGR solenoid valve No.2**

| | |
|---|---|
| Battery voltage | Normal condition |
| When current is flowing | Vacuum is maintained |
| When current is not flowing | Vacuum leaks |

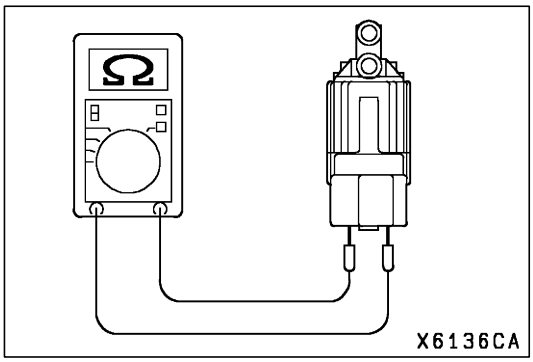


## EGR SOLENOID VALVE RESISTANCE CHECK

Measure terminal resistance of EGR solenoid valves Nos. 1 and 2 with a circuit tester.

**Standard value: 36 - 44 Ω (at 20°C)**

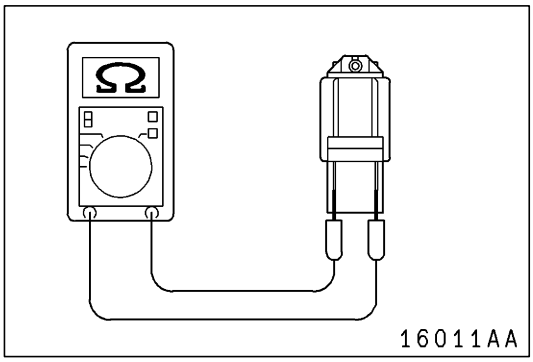


## ACCELERATOR PEDAL POSITION SENSOR (APS), ENGINE COOLANT TEMPERATURE SENSOR, BOOST AIR TEMPERATURE SENSOR, FUEL TEMPERATURE SENSOR, EGR VALVE POSITION SENSOR CHECK

Refer to GROUP 13E - On-vehicle Service.

## CHECK AT ENGINE-ECU TERMINALS

Refer to GROUP 13E - Troubleshooting.

Purchased from www.WorkshopManuals.co.uk

www.WorkshopManuals.co.uk

# EGR VALVE AND EGR COOLER

## REMOVAL AND INSTALLATION

**Pre-removal and Post-installation Operation**
- Engine Coolant Draining and Supplying.

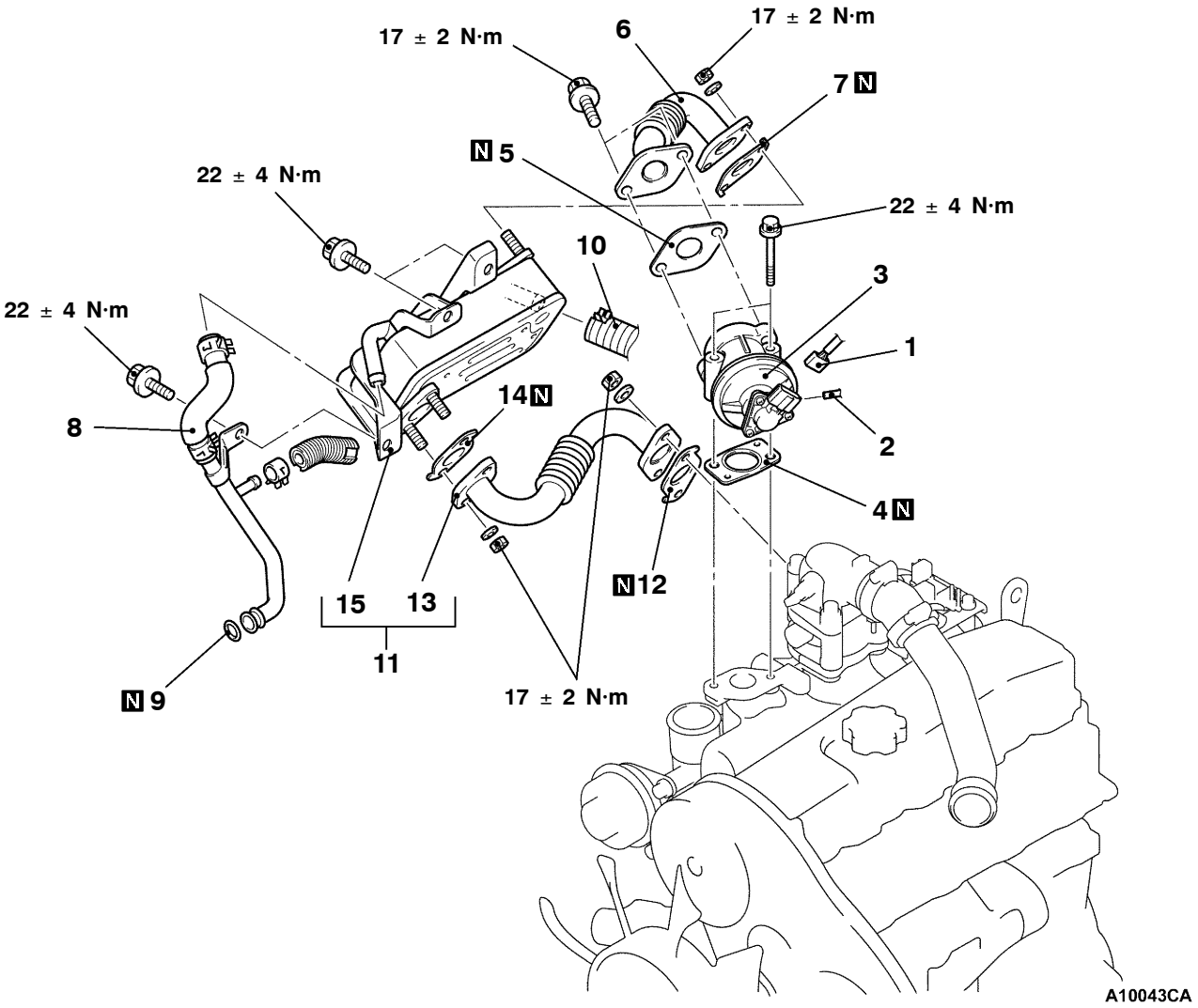


**Removal steps**

1. EGR valve connector
2. Vacuum hose connection
3. EGR valve
4. EGR gasket
5. EGR pipe gasket
6. EGR upper pipe
7. ▶A◀ EGR pipe gasket
8. ▶C◀ Water pipe and hose assembly
9. ▶B◀ O-ring
10. Water hose connection
11. EGR cooler and EGR lower pipe assembly
12. ▶A◀ EGR pipe gasket
13. EGR lower pipe
14. ▶A◀ EGR pipe gasket
15. EGR cooler

Purchased from www.WorkshopManuals.co.uk

www.WorkshopManuals.co.uk

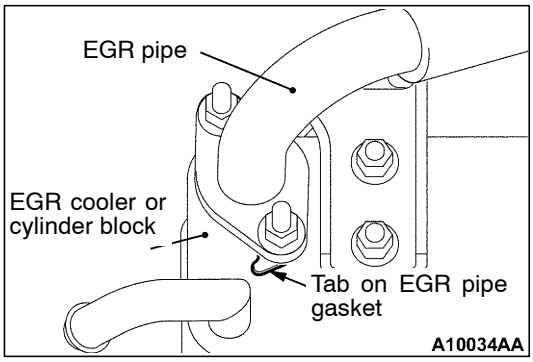


## INSTALLATION SERVICE POINT

### ▶A◀ EGR PIPE GASKET INSTALLATION

The tab on the EGR pipe gasket should be positioned as shown.

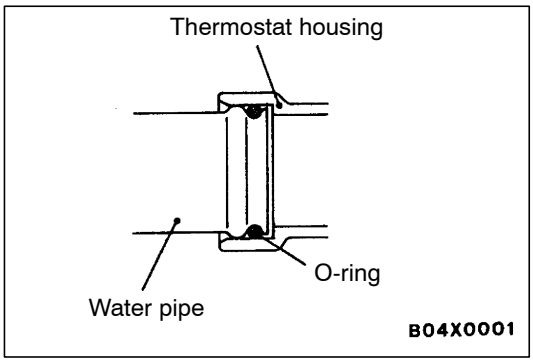


### ▶B◀ O-RING INSTALLATION

Rinse the mounting location of the O-ring and water pipe with water, and install the O-ring and water pipe.

**Caution**

1. **Care must be taken not to permit engine oil or other greases to adhere to the O-ring.**
2. **When inserting the pipe, check to be sure that there is no sand, dirt, etc. on its inner surface.**

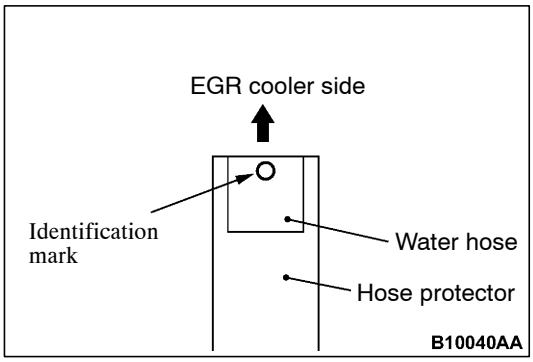


### ▶C◀ WATER PIPE AND HOSE ASSEMBLY INSTALLATION

If the water hose is separated from the water pipe for any reason, the identification mark on the water hose end should face towards the EGR cooler.

Purchased from www.WorkshopManuals.co.uk

www.WorkshopManuals.co.uk

# CATALYTIC CONVERTER

## GENERAL INFORMATION

The three-way catalytic converter, together with the closed loop air-fuel ratio control based on the oxygen sensor signal, oxidizes carbon monoxides (CO) and hydrocarbons (HC) and reduces nitrogen oxides (NOx).

When the mixture is controlled at stoichiometric air-fuel ratio, the three-way catalytic converter provides the highest purification against the three constituents, namely, CO, HC and NOx.

## REMOVAL AND INSTALLATION

**Pre-removal and Post-installation Operation**
Under Cover Removal and Installation

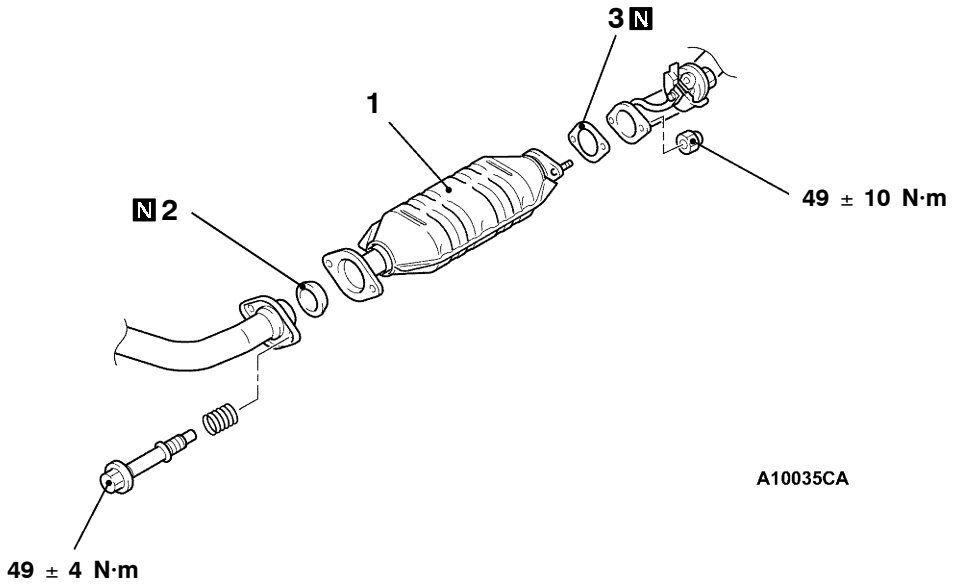


**Removal steps**

1. Catalytic converter
2. Seal ring
3. Gasket

Purchased from www.WorkshopManuals.co.uk

www.WorkshopManuals.co.uk

# EMISSION CONTROL SYSTEM <4M4>

## GENERAL

### OUTLINE OF CHANGE

Some service procedures have been established as the following changes have been made due to the compliance with the Emission Regulation Step III.

- An electronic-controlled EGR valve and EGR cooler have been used.

## SERVICE SPECIFICATION

| Items | Standard value |
|---|---|
| EGR valve assembly output voltage V | 0.5 - 4.5 |

## EXHAUST GAS RECIRCULATION (EGR) SYSTEM

### SYSTEM DIAGRAM

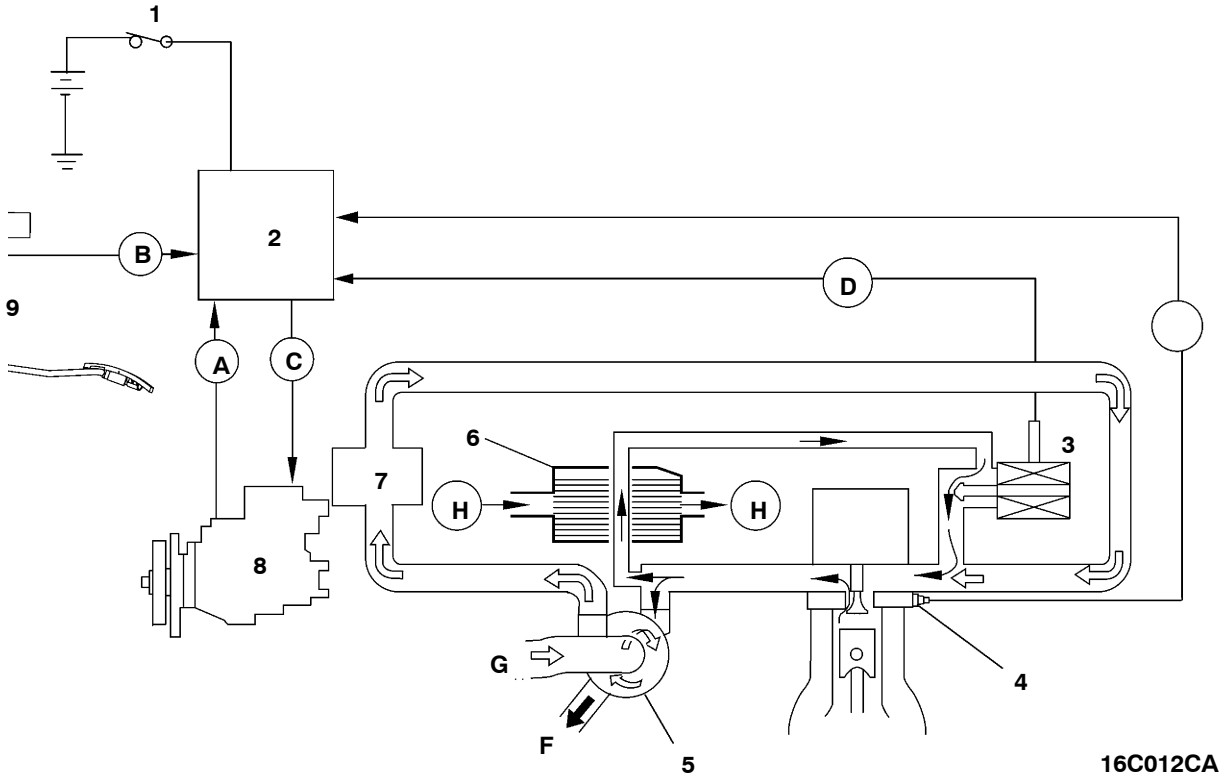


1. Ignition switch
2. Engine-ECU
3. EGR valve assembly
4. Engine coolant temperature sensor
5. Turbocharger
6. EGR cooler
7. Intercooler
8. Fuel injection pump
9. Accelerator pedal

A. Engine speed signal
B. Accelerator pedal opening angle signal
C. Fuel injection timing control signal
D. EGR valve control signal
E. Engine coolant temperature signal
F. Exhaust gas
G. Intake air
H. Engine coolant

Purchased from www.WorkshopManuals.co.uk

www.WorkshopManuals.co.uk

## COMPONENT LOCATION

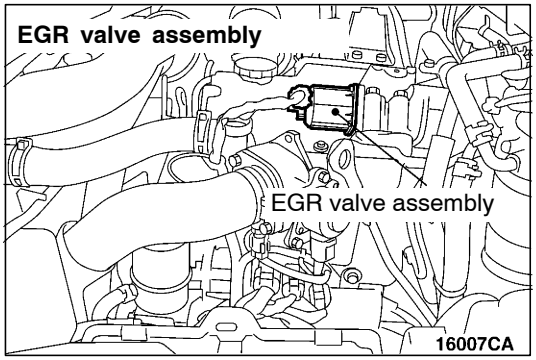


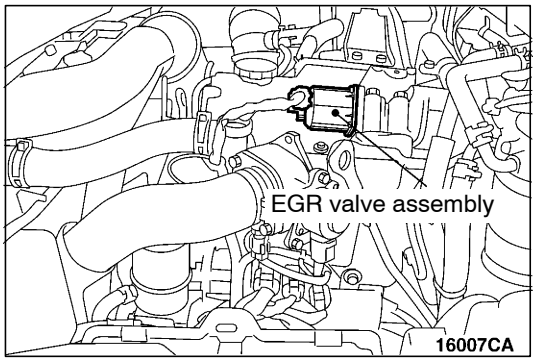


## EGR VALVE ASSEMBLY CHECK

1. Connect the MUT-II to the diagnosis connector to check for data list item No.32.
2. Start the engine, and warm up the engine.
3. Raise the engine speed gradually, and make sure that the output voltage changes within the standard value range.

   **Standard value: 0.5 - 4.5 V**
4. If not within the standard value range, replace the EGR valve.

Purchased from www.WorkshopManuals.co.uk

www.WorkshopManuals.co.uk

# EGR VALVE AND EGR COOLER <4M4>

## REMOVAL AND INSTALLATION

**Pre-removal and Post-installation Operation**
- Engine Coolant Draining and Supplying.
- Engine Cover Removal and Installation.

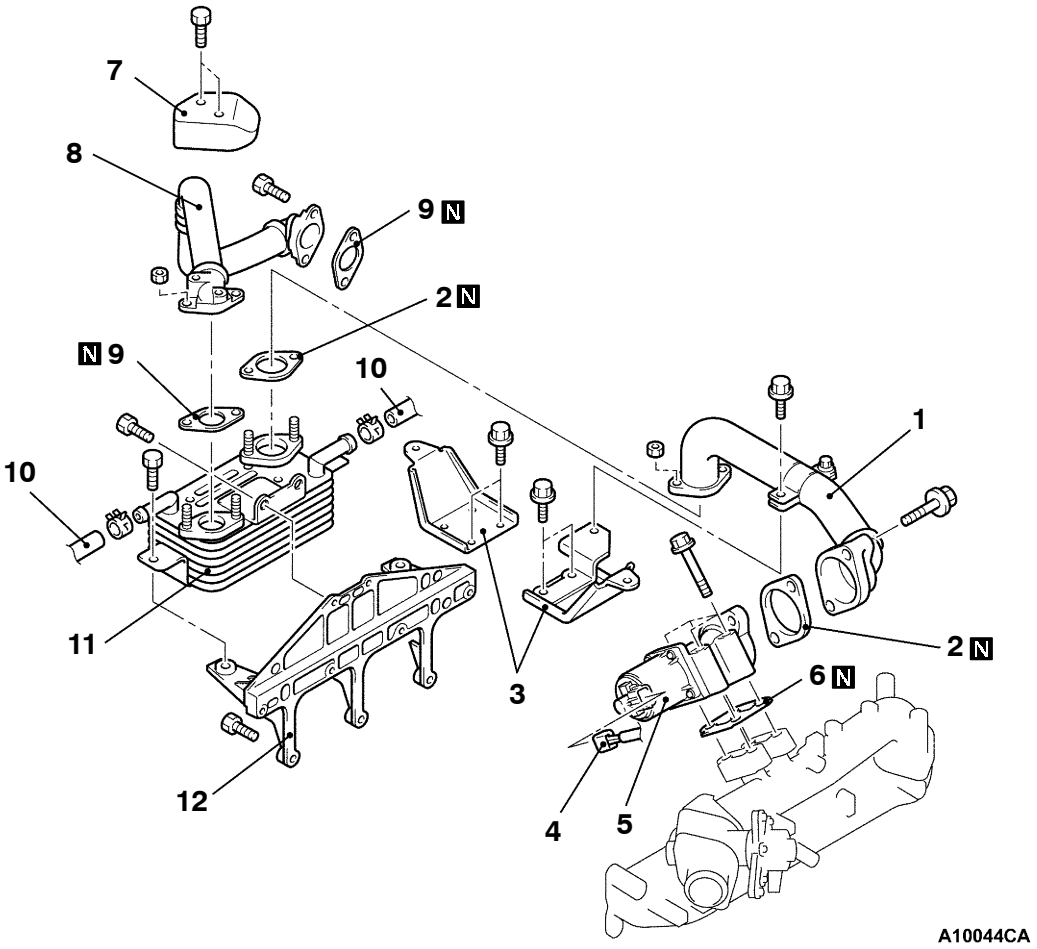


**Removal steps**

1. EGR pipe B
2. EGR pipe gasket
3. Engine cover bracket
4. EGR valve connector
5. EGR valve
6. EGR valve gasket
- Air cleaner assembly
7. EGR pipe insulator
8. EGR pipe A
9. EGR pipe gasket
10. Water hose connection
11. EGR cooler assembly
12. EGR cooler bracket

Purchased from www.WorkshopManuals.co.uk

www.WorkshopManuals.co.uk

**NOTES**

Purchased from www.WorkshopManuals.co.uk

www.WorkshopManuals.co.uk

# CLUTCH

**Click on the applicable bookmark to selected the required model year.**

Purchased from www.WorkshopManuals.co.uk

www.WorkshopManuals.co.uk


# CLUTCH

## CONTENTS

**GENERAL INFORMATION** . . . . . 2

**SERVICE SPECIFICATIONS** . . . . . 2

**LUBRICANTS** . . . . . 2

**ON-VEHICLE SERVICE** . . . . . 2

Clutch Pedal Inspection and Adjustment . . . . . 2

Clutch Pedal Position Switch Continuty Check . . . . . 3

Bleeding . . . . . 3

**CLUTCH PEDAL** . . . . . 4

**CLUTCH CONTROL** . . . . . 5

Clutch Master Cylinder . . . . . 8

Purchased from www.WorkshopManuals.co.uk

www.WorkshopManuals.co.uk

# GENERAL INFORMATION

The clutch is a dry single-disc, diaphragm type; hydraulic pressure is used for the clutch control.

# SERVICE SPECIFICATIONS

| Items | Standard value |
|---|---|
| Clutch pedal height mm | 202 - 205 <L.H. drive vehicles><br>197 - 200 <R.H. drive vehicles> |
| Clutch pedal clevis pin play mm | 1 - 3 |
| Clutch pedal free play mm | 6 - 13 |
| Distance between the clutch pedal and the toeboard when the clutch is disengaged mm | 75 or more <L.H. drive vehicles><br>70 or more <R.H. drive vehicles> |

# LUBRICANTS

| Items | Specified lubricants | Quantity |
|---|---|---|
| Clutch fluid | Brake fluid DOT3 or DOT4 | As required |
| Push rod assembly | Rubber grease | |
| Release cylinder push rod | MITSUBISHI genuine grease Part No. 0101011 | |

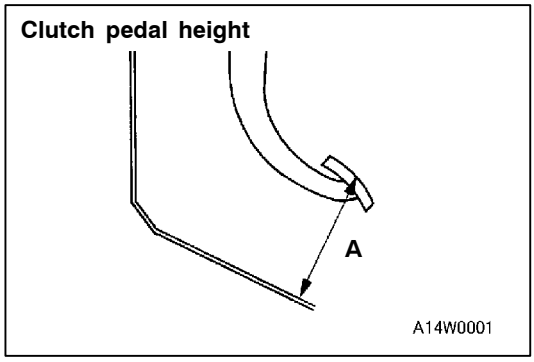


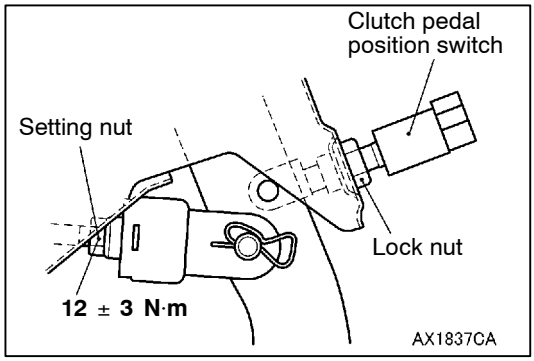


# ON-VEHICLE SERVICE

## CLUTCH PEDAL INSPECTION AND ADJUSTMENT

1. Turn up the carpet, etc. under the clutch pedal.
2. Measure the clutch pedal height.
   **Standard value (A):**
   **202 - 205 mm <L.H. drive vehicles>**
   **197 - 200 mm <R.H. drive vehicles>**
3. If the height of the clutch pedal is outside the standard value, loosen the setting nut or clutch pedal position switch lock nut <vehicles with auto-cruise control> to adjust the pedal height to the standard value.

Purchased from www.WorkshopManuals.co.uk

www.WorkshopManuals.co.uk

Clutch pedal clevis pin play

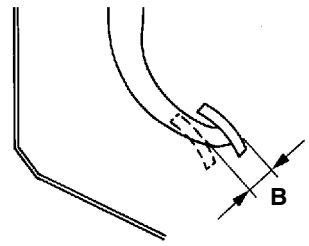


4. Measure the clutch pedal clevice pin play.
   **Standard value (B): 1 - 3 mm**
5. If the clutch pedal play is not within the standard value, loosen the setting nut to adjust the play to the standard value.

   **Caution**
   **Do not push in the master cylinder push rod at this time, otherwise the clutch will not operate properly.**

Clutch pedal free play | Distance between the clutch pedal and the toeboard when the clutch is disengaged

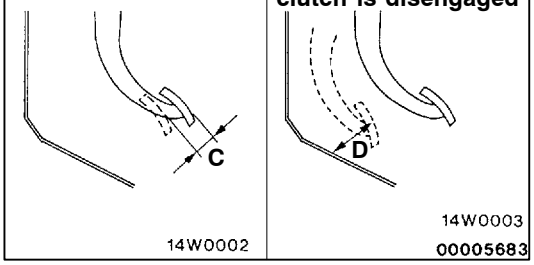


6. After completing the adjustments, confirm that the clutch pedal free play (measured at the face of the pedal pad) and the distance between the clutch pedal (the face of the pedal pad) and the toeboard when the clutch is disengaged are within the standard value ranges.

   **Standard value (C): 6 - 13 mm**
   **Standard value (D):**
   **75 mm or more <L.H. drive vehicles>**
   **70 mm or more <R.H. drive vehicles>**
7. If the clutch pedal free play and the distance between the clutch pedal and the toeboard when the clutch is disengaged do not agree with the standard values, it is probably the result of either air in the hydraulic system or a faulty master cylinder, release cylinder or clutch. Bleed the air, or disassemble and inspect the master cylinder, release cylinder or clutch.
8. Turn back the carpet, etc.

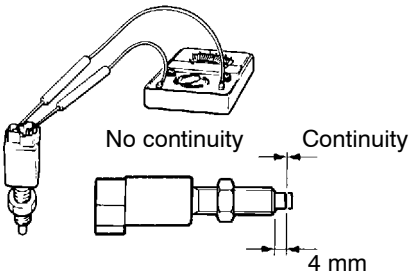


## CLUTCH PEDAL POSITION SWITCH CONTINUITY CHECK

1. Adjust the clutch pedal. (Refer to P.21-2.)
2. Depress the clutch pedal, and check the continuity between the terminals.

| Measurement Conditions | Terminal No. | Terminal No. |
|---|---|---|
| | 1 | 2 |
| Clutch pedal depressed | ○——— | ———○ |
| Clutch pedal not depressed | | |

## BLEEDING

**Specified fluid: Brake fluid DOT 3 or DOT 4**

**Caution**
**Use the specified brake fluid. Avoid using a mixture of the specified fluid and other fluid.**

Purchased from www.WorkshopManuals.co.uk

www.WorkshopManuals.co.uk

# CLUTCH PEDAL

## REMOVAL AND INSTALLATION

**Post-installation Operation**
Clutch Pedal Adjustment (Refer to P.21-2)

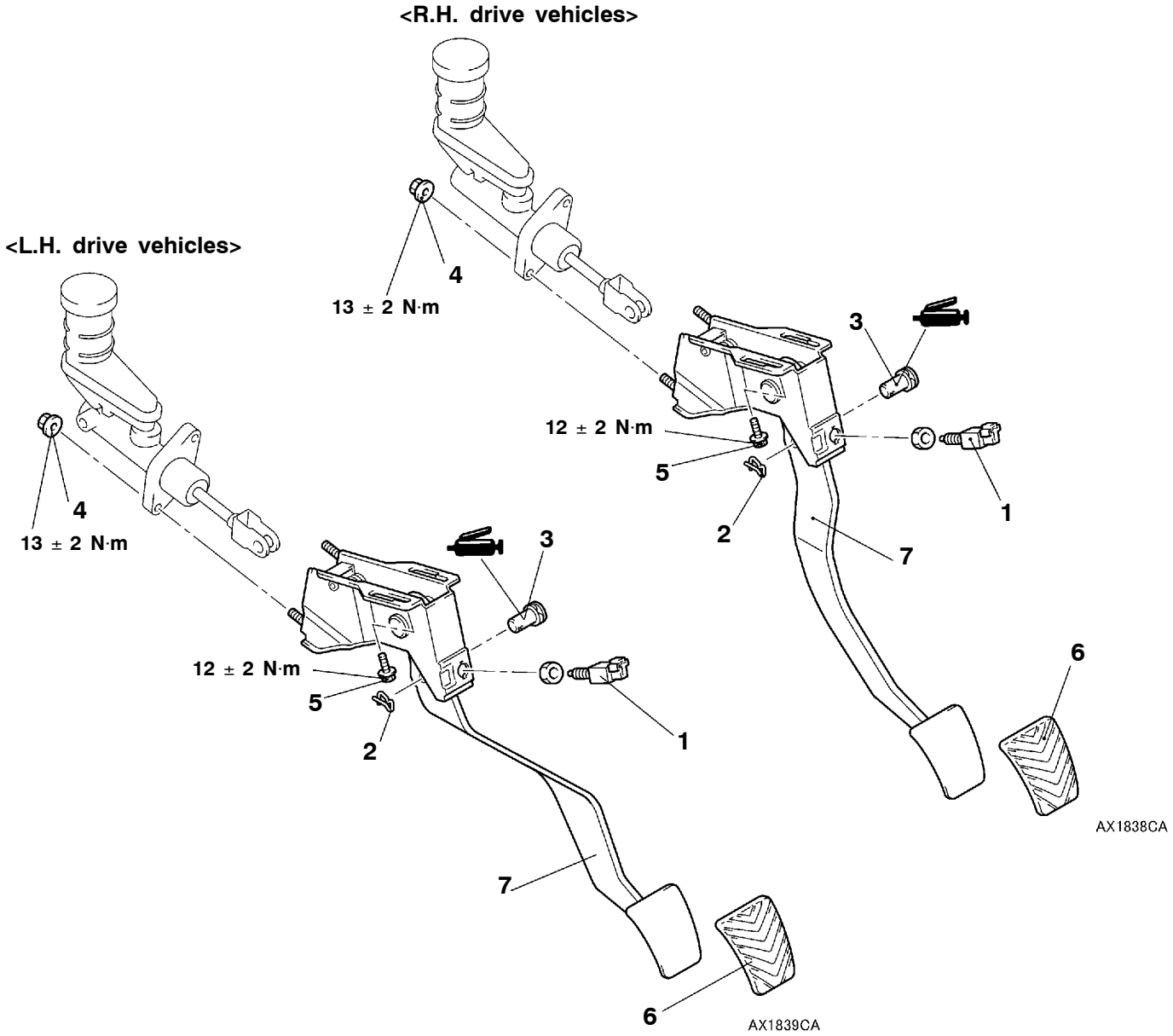


**Removal steps**

- Stay A (Refer to GROUP 52A - Instrument Panel)

1. Clutch pedal position switch <vehicles with auto-cruise control>
2. Snap pin
3. Clevis pin
4. Clutch master cylinder mounting nut
5. Master cylinder member mounting bolt
6. Pedal pad
7. Clutch pedal assembly

Purchased from www.WorkshopManuals.co.uk

www.WorkshopManuals.co.uk

# CLUTCH CONTROL

## REMOVAL AND INSTALLATION

**Pre-removal Operation**
Clutch Fluid Draining

**Post-installation Operation**
- Clutch Fluid Supplying
- Clutch Line Bleeding (Refer to P.21-3)
- Clutch Pedal Adjustment (Refer to P.21-2)

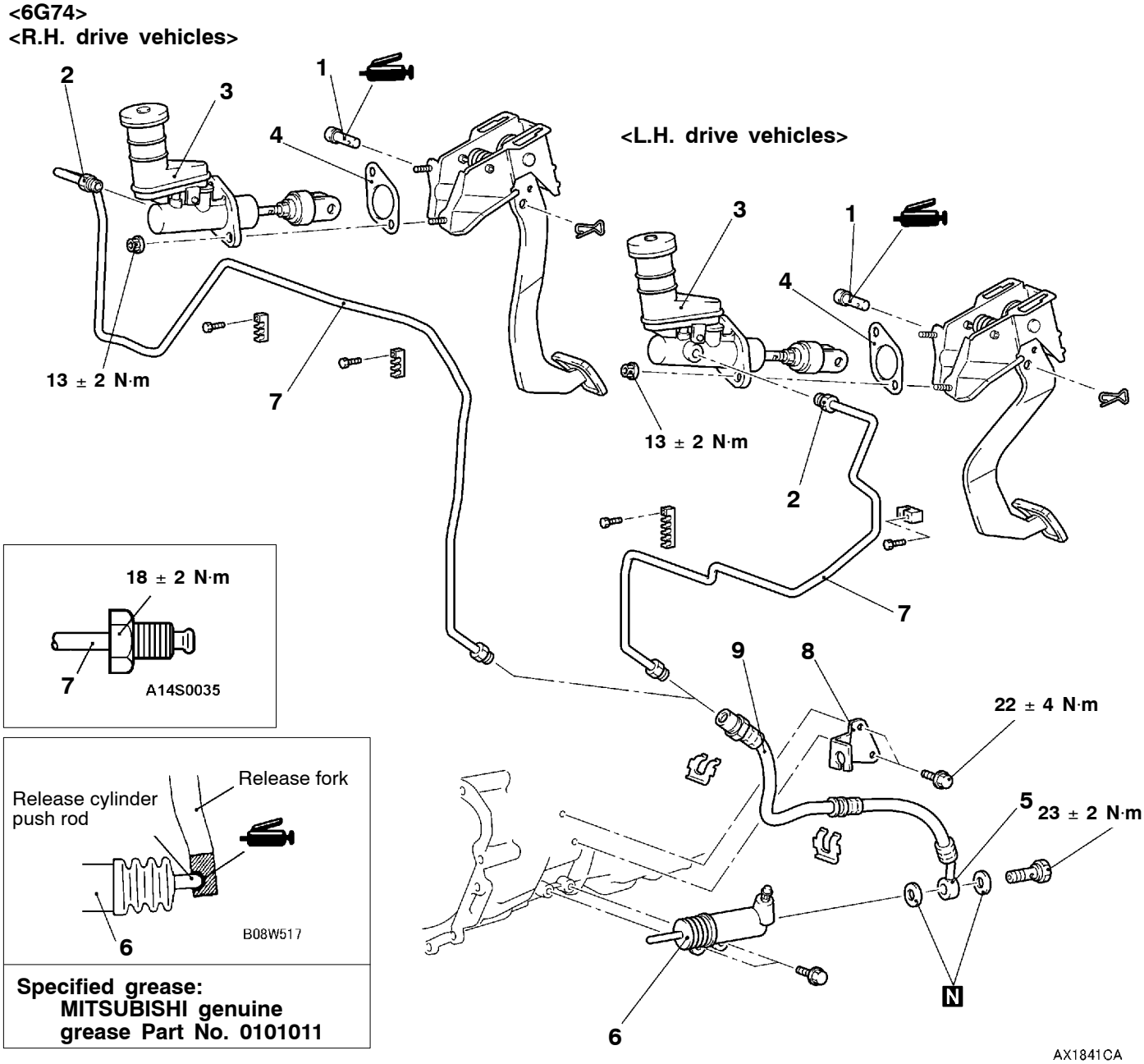


**Clutch master cylinder assembly removal steps**

1. Clevis pin
2. Clutch tube connection
3. Clutch master cylinder assembly
4. Sealer

**Clutch release cylinder assembly removal steps**

5. Clutch hose connection
6. Clutch release cylinder assembly

**Clutch line removal steps**

7. Clutch tube
8. Bracket
9. Clutch hose

Purchased from www.WorkshopManuals.co.uk

www.WorkshopManuals.co.uk

<4D56>
<R.H. drive vehicles>

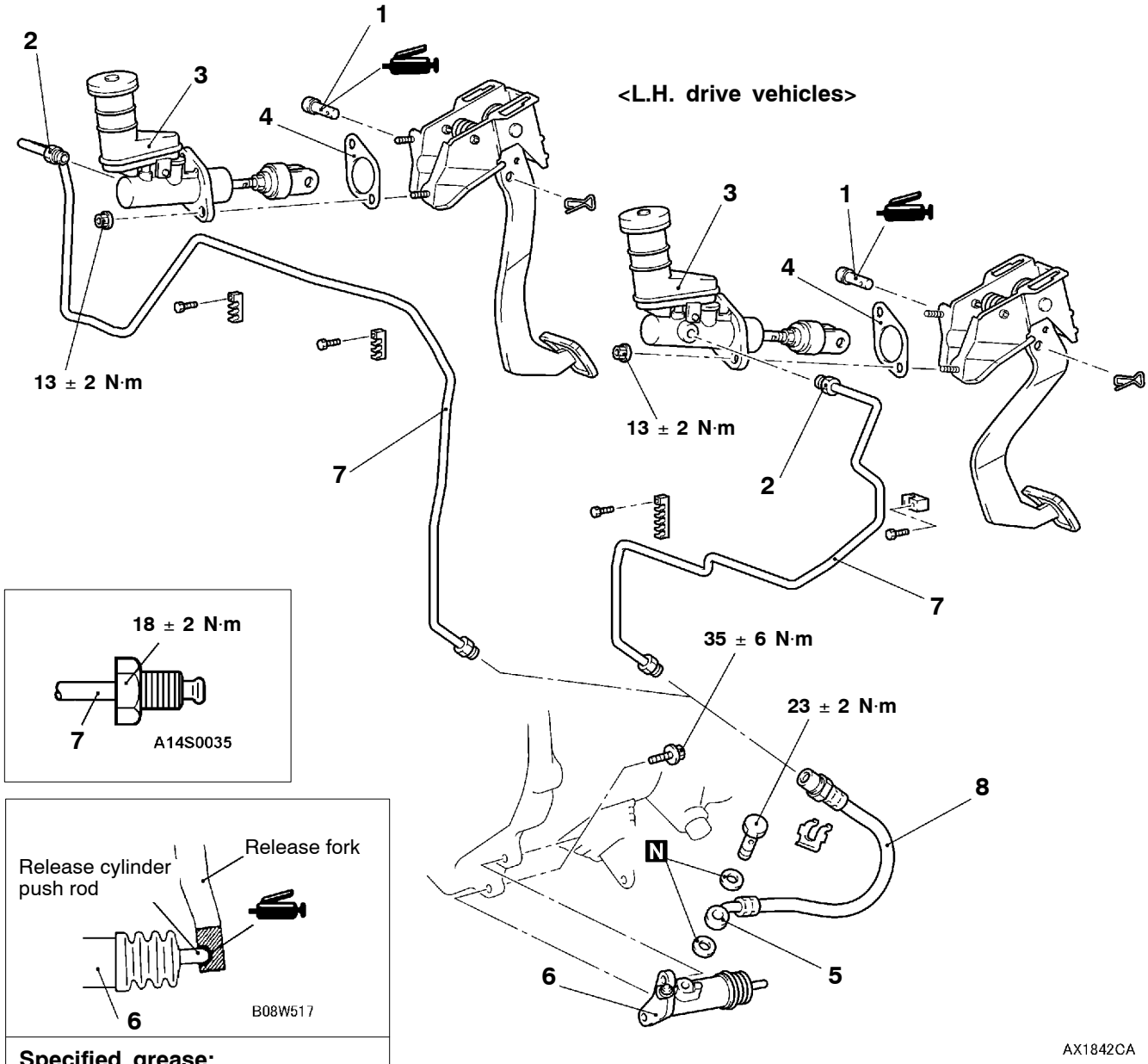








**Specified grease:**
**MITSUBISHI genuine grease Part No. 0101011**

**Clutch master cylinder assembly removal steps**

1. Clevis pin
2. Clutch tube connection
3. Clutch master cylinder assembly
4. Sealer

**Clutch release cylinder assembly removal steps**

5. Clutch hose connection
6. Clutch release cylinder assembly

**Clutch line removal steps**

7. Clutch tube
8. Clutch hose

Purchased from www.WorkshopManuals.co.uk

www.WorkshopManuals.co.uk

<4M41>
<R.H. drive vehicles>

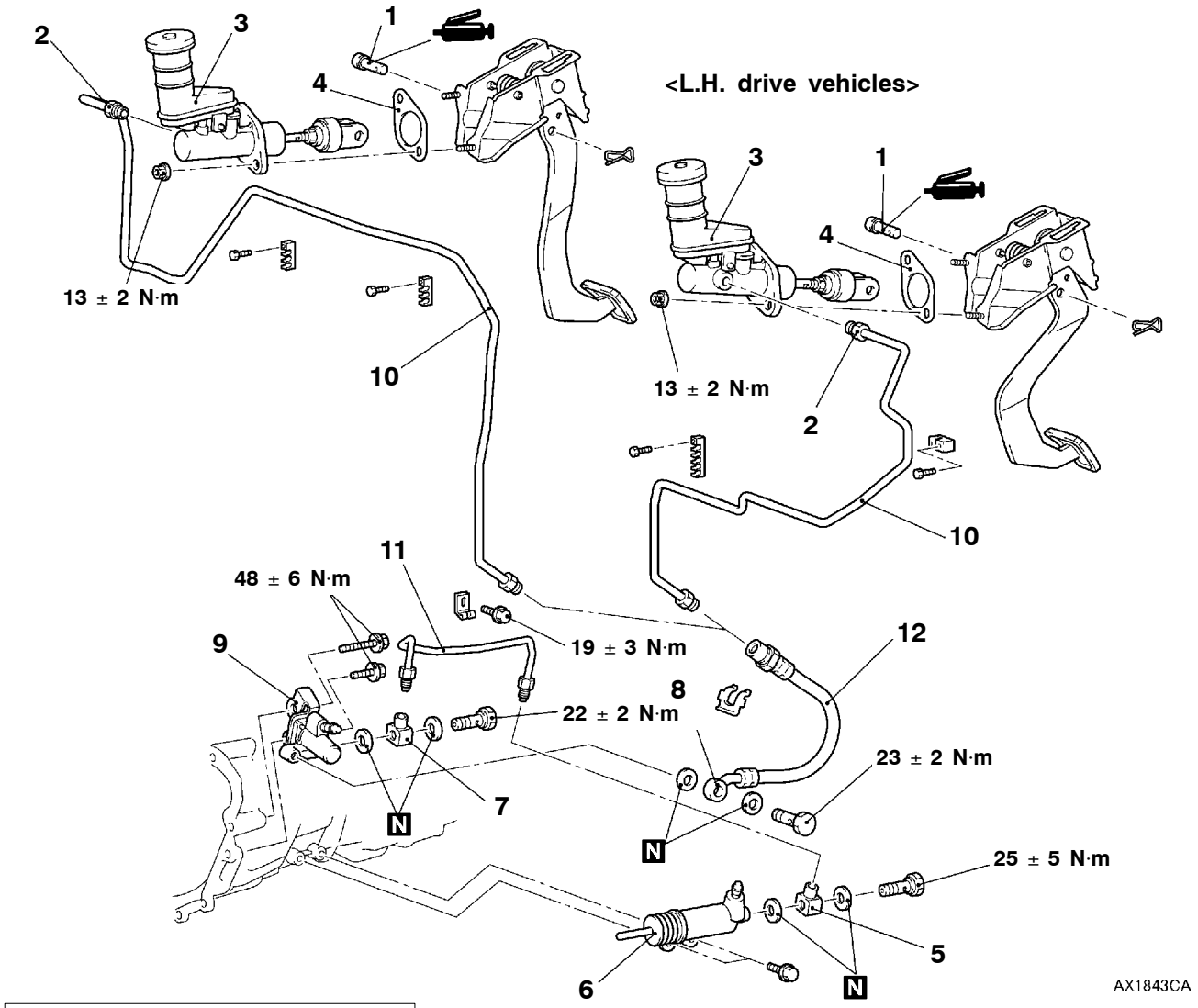


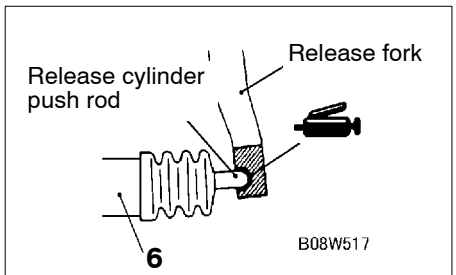


**Specified grease:**
**MITSUBISHI genuine grease Part No. 0101011**

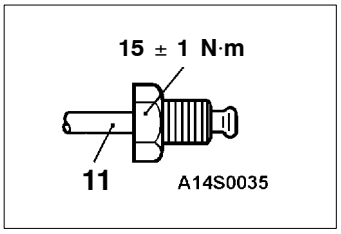


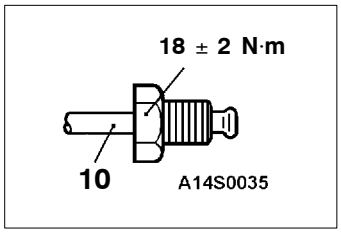


**Clutch master cylinder assembly removal steps**

1. Clevis pin
2. Clutch tube connection
3. Clutch master cylinder assembly
4. Sealer

**Clutch release cylinder assembly removal steps**

5. Union
6. Clutch release cylinder assembly

**Clutch chamber assembly removal steps**

7. Union
8. Clutch hose connection
9. Clutch chamber assembly

**Clutch line removal steps**

10. Clutch tube
11. Clutch tube
12. Clutch hose

Purchased from www.WorkshopManuals.co.uk

www.WorkshopManuals.co.uk

## DISASSEMBLY AND REASSEMBLY

### CLUTCH MASTER CYLINDER

**Caution**
**Do not disassemble piston assembly.**

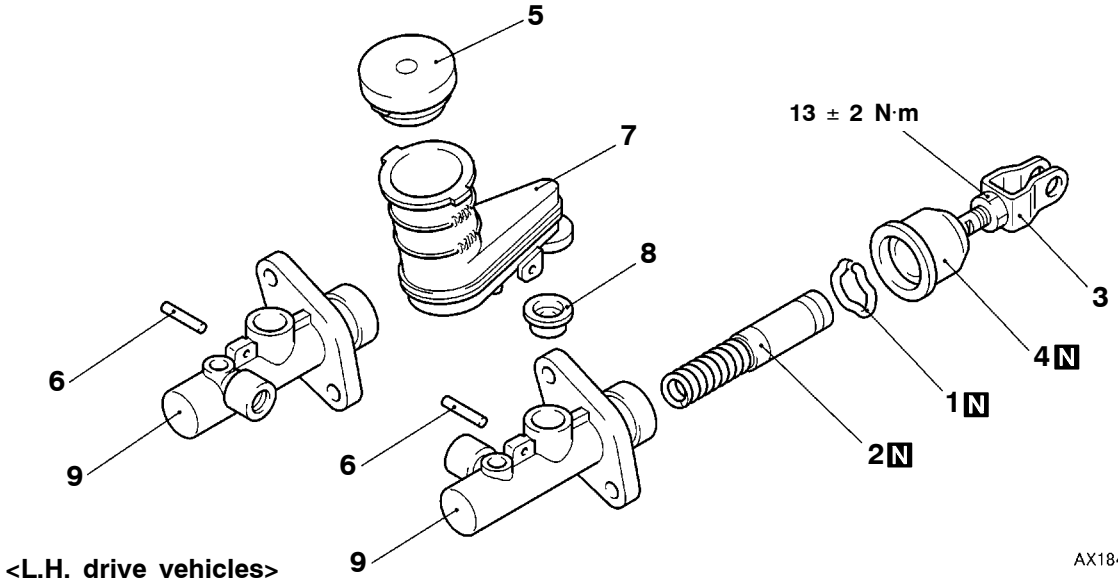


<L.H. drive vehicles>

<R.H. drive vehicles>

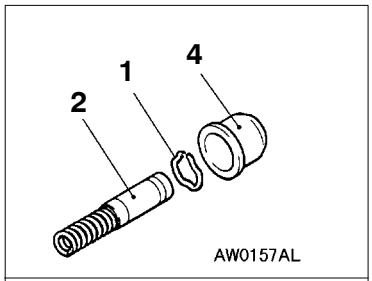


**Piston repair kit**

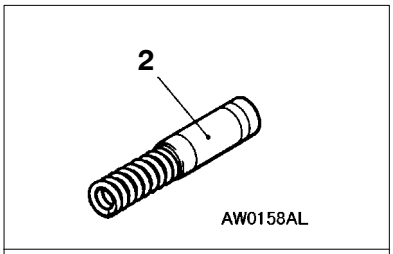


**Clutch fluid:**
**Brake fluid DOT3 or DOT4**

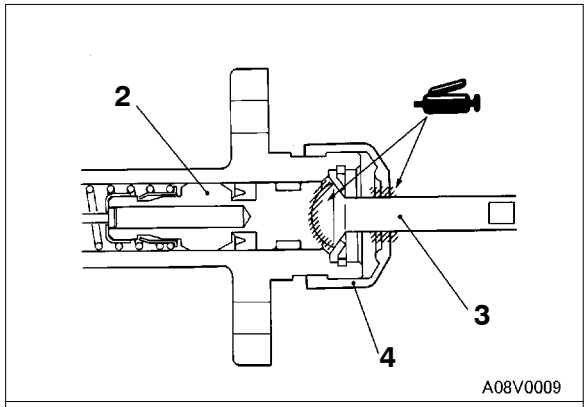


**Grease: Rubber grease**

**Disassembly steps**

1. Piston stopper ring
2. Piston assembly
3. ▶A◀ Push rod assembly
4. Boot
5. Reservoir cap
6. Spring pin
7. Reservoir tank
8. Seal
9. Master cylinder body

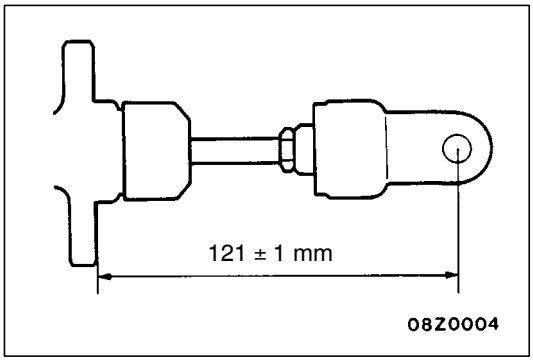


## INSTALLATION SERVICE POINT

### ▶A◀ PUSH ROD ASSEMBLY INSTALLATION

Set the length of the push rod assembly to the shown dimension to make the adjustment of clutch pedal easier.

Purchased from www.WorkshopManuals.co.uk

www.WorkshopManuals.co.uk

# MANUAL TRANSMISSION

**Click on the applicable bookmark to selected the required model year.**

Purchased from www.WorkshopManuals.co.uk

www.WorkshopManuals.co.uk


# MANUAL TRANSMISSION

## CONTENTS

**GENERAL INFORMATION** . . . . . 2

**LUBRICANTS** . . . . . 2

**SEALANTS** . . . . . 2

**SPECIAL TOOL** . . . . . 2

**TROUBLESHOOTING <SS4 II>** . . . . . 3

**ON-VEHICLE SERVICE** . . . . . 6

Transmission Oil Check . . . . . 6

Oil Replacement . . . . . 6

4WD Detection Switch Continuity Check <V5MT1> . . . . . 7

High/Low Detection Switch Continuity Check <V5MT1> . . . . . 7

**TRANSMISSION CONTROL <V5MT1>** . . . . . 8

**TRANSMISSION CONTROL <V5MT3>** . . . . . 9

**TRANSMISSION ASSEMBLY** . . . . . 10

**4WD INDICATOR-ECU/TRANSFER-ECU** . . . . 17

Purchased from www.WorkshopManuals.co.uk

www.WorkshopManuals.co.uk

# GENERAL INFORMATION

| Items | | Specifications | | | |
|---|---|---|---|---|---|
| Transmission model | | V5MT1 | V5M31 | | |
| Engine model | | 4D5 | 4D5 | 4M4 | 6G7 |
| Type | | 5-speed, floor-shift | | | |
| Gear ratio | 1st | 3.918 | 3.952 | 4.234 | |
| | 2nd | 2.261 | 2.238 | | |
| | 3rd | 1.395 | 1.398 | | |
| | 4th | 1.000 | | | |
| | 5th | 0.829 | 0.819 | 0.761 | 0.819 |
| | Reverse | 3.925 | 3.553 | | |
| Transfer type | | 2-speed | | | |
| Gear ratio | High | 1.000 | | | |
| | Low | 1.925 | 1.900 | | |

# LUBRICANTS

| Items | Specified lubricants | Quantity L |
|---|---|---|
| Transmission oil | Hypoid gear oil SAE 75W-90 or 75W-85W conforming to API GL-4 | 3.2 |
| Transfer oil | Hypoid gear oil SAE 75W-90 or 75W-85W conforming to API GL-4 | 2.5 |

# SEALANTS

| Items | Specified sealant | Remarks |
|---|---|---|
| Oil filler plug | 3M ATD Part No. 8660 or equivalent | Semi-drying sealant |
| Oil drain plug | 3M ATD Part No. 8660 or equivalent | Semi-drying sealant |

# SPECIAL TOOL

| Tool | Number | Name | Use |
|---|---|---|---|
| 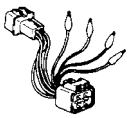 | MD998464 | Test harness (4P, square) | Inspection of lever position sensor |

Purchased from www.WorkshopManuals.co.uk

www.WorkshopManuals.co.uk

# TROUBLESHOOTING <SS4 II>

For items other than the following service procedures, refer to GROUP 23 - Troubleshooting <SS4 II>.

## INSPECTION CHART FOR DIAGNOSIS CODES

| Diagnosis code | Diagnosis item | | Reference page |
|---|---|---|---|
| 21 | Lever position sensor (LPS) system <4D5> | Open circuit/Malfunction of sensor | 22-3 |

## INSPECTION PROCEDURE FOR DIAGNOSIS CODES

| Code No.21 Lever position sensor (LPS) system <4D5> | Probable cause |
|---|---|
| If the LPS output voltage becomes 0.2 V or less at idling, code No.21 will be set as open circuit or maladjustment of the LPS. | • Malfunction of the LPS<br>• Malfunction of harness or connector<br>• Malfunction of transfer-ECU<br>• Malfunction of the glow-ECU |

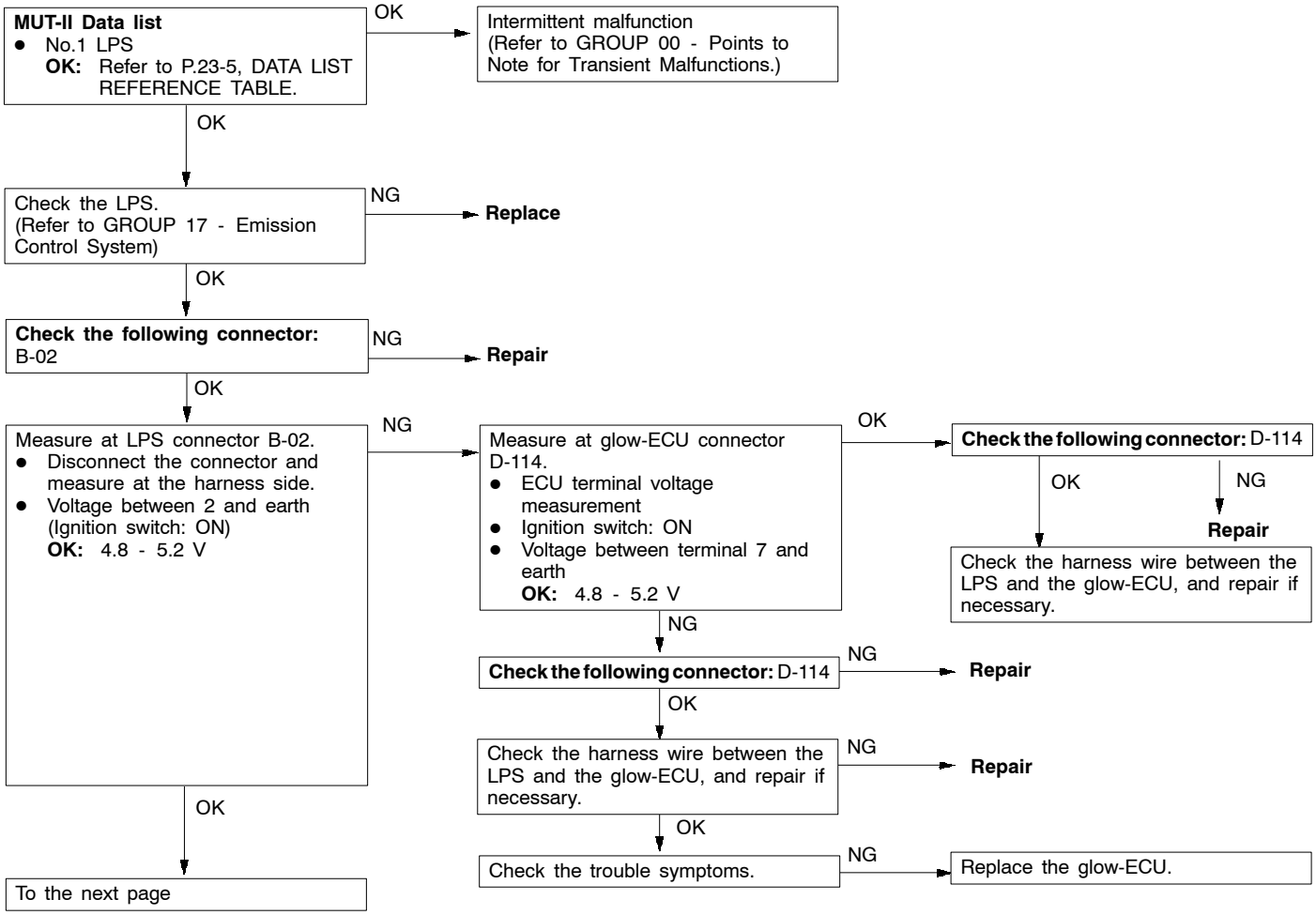


Purchased from www.WorkshopManuals.co.uk

www.WorkshopManuals.co.uk

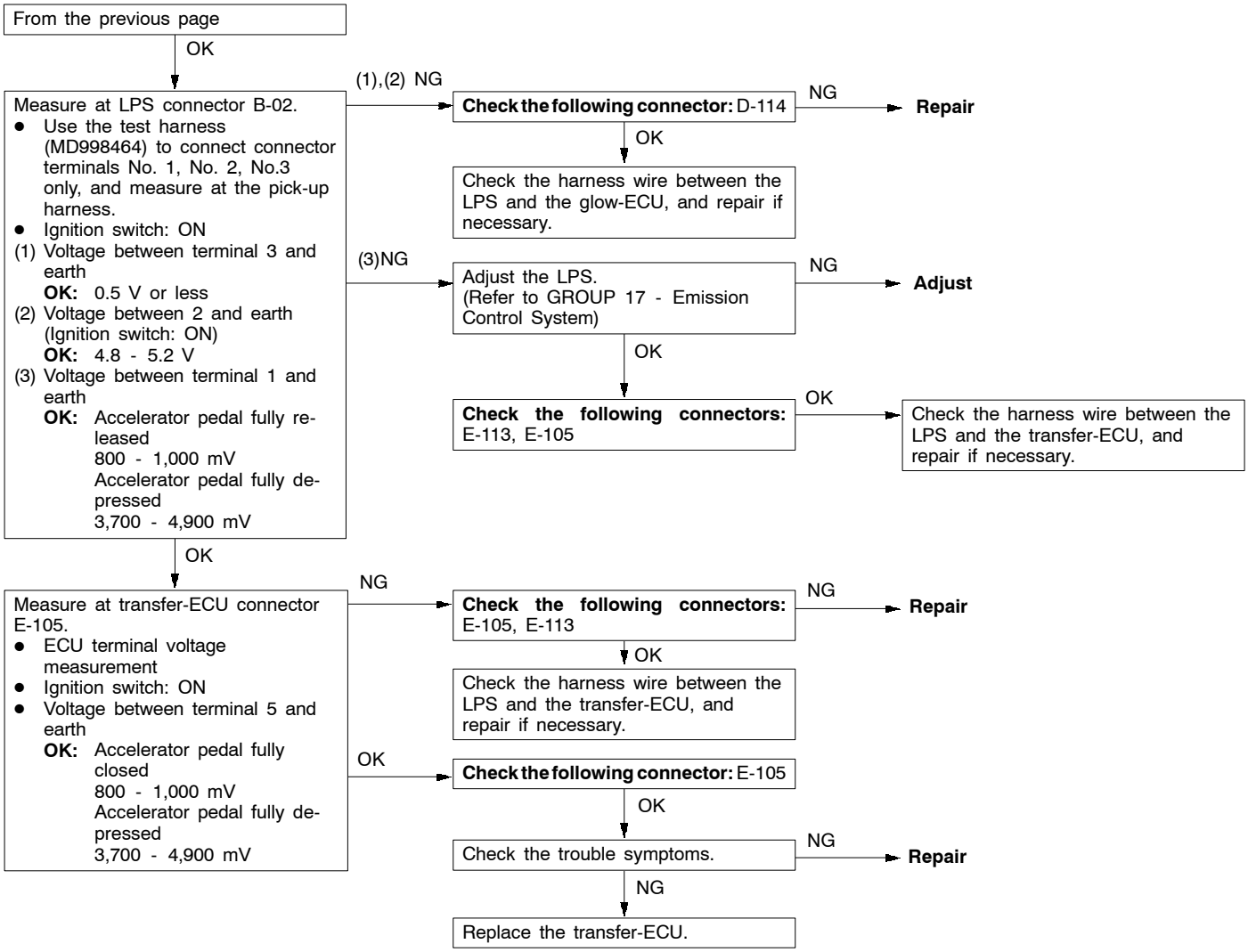


Purchased from www.WorkshopManuals.co.uk

www.WorkshopManuals.co.uk

## DATA LIST REFERENCE TABLE

| Data list No. | Check item | Check conditions | | Normal condition |
|---|---|---|---|---|
| 1 | Lever position sensor (LPS) <4D5> | Engine: Stopped<br>Selector lever position: P | Accelerator pedal: Fully closed | 800 - 1,000 mV |
| | | | Accelerator pedal: Depressed | Gradually increases from the above value. |
| | | | Accelerator pedal: Fully open | 3,700 - 4,900 mV |

## CHECK AT TRANSFER-ECU TERMINAL

| Ter-minal No. | Check item | Check conditions | Standard value |
|---|---|---|---|
| 5 | Lever position sensor (LPS) <4D5> | Accelerator pedal: Fully closed (engine stopped) | 0.8 - 1.0 V |
| | | Accelerator pedal: Fully open (engine stopped) | 3.7 - 4.9 V |

Purchased from www.WorkshopManuals.co.uk

www.WorkshopManuals.co.uk

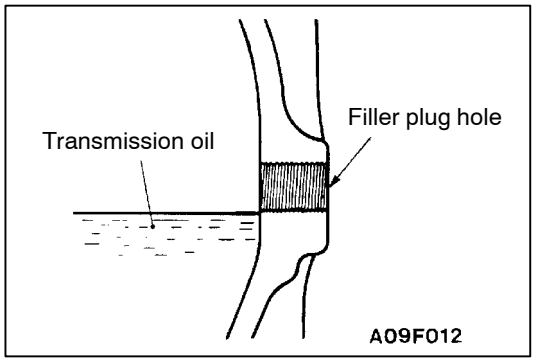


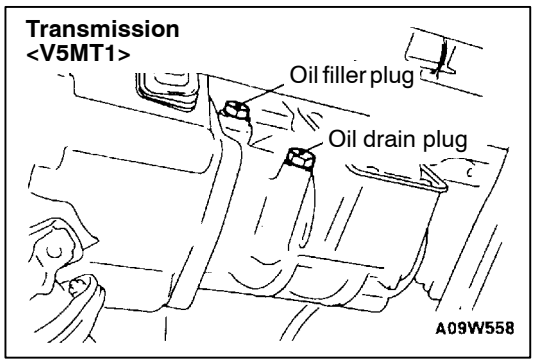


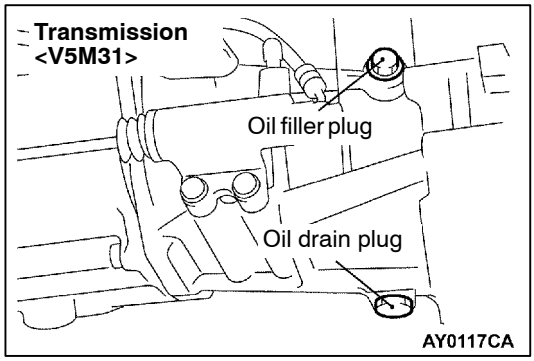


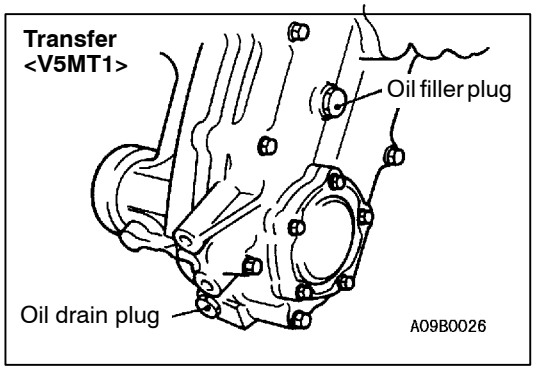


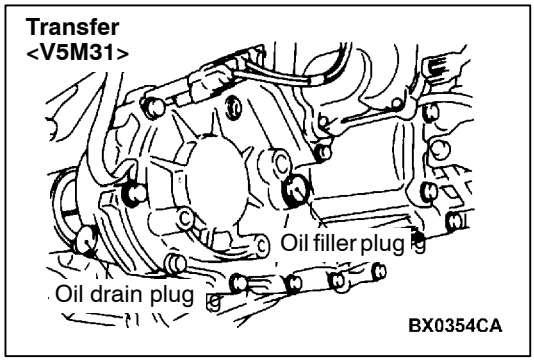


# ON-VEHICLE SERVICE

## TRANSMISSION OIL CHECK

1. Remove the oil filler plug.
2. Oil level should be at the lower portion of the filler plug hole.
3. Check that the transmission oil is not noticeably dirty, and that it has a suitable viscosity.
4. Tighten the filler plug to the specified torque.

   **Tightening torque: 32 ± 2 N·m**

## OIL REPLACEMENT

1. Remove oil filler plug and oil drain plug.
2. Drain oil.
3. Apply sealant to the oil drain plug threads.
4. Tighten the oil drain plug to the specified torque.

   **Tightening torque:**

   **V5MT1 39 ± 5 N·m**

   **V5M31 32 ± 2 N·m**

   **Transfer 32 ± 2 N·m**

   **Specified sealant:**
   **3M ATD Part No. 8660 or equivalent**
5. Fill with specified oil till the level comes to the lower portion of oil filler plug hole.

   **Specified transmission oil:**

   **Hypoid gear oil SAE 75W-90 or 75W-85W conforming to API GL-4**

   **Quantity:**

   **Transmission 3.2 L**

   **Transfer 2.5 L**
6. Apply sealant to the oil filler plug threads.
7. Tighten the oil filler plug to the specified torque.

   **Tightening torque: 32 ± 2 N·m**

   **Specified sealant:**
   **3M ATD Part No. 8660 or equivalent**

Purchased from www.WorkshopManuals.co.uk

www.WorkshopManuals.co.uk

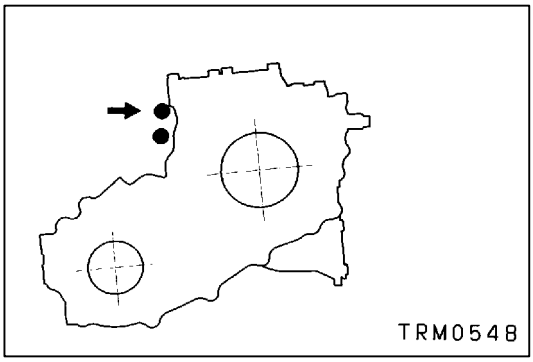


## 4WD DETECTION SWITCH CONTINUITY CHECK <V5MT1>

Check the continuity between terminals of the black connector indicated in the illustration.

| Transfer lever position | Terminal No. | |
|---|---|---|
| | 1 | 2 |
| 2H | | |
| 4H | ○—— | ——○ |

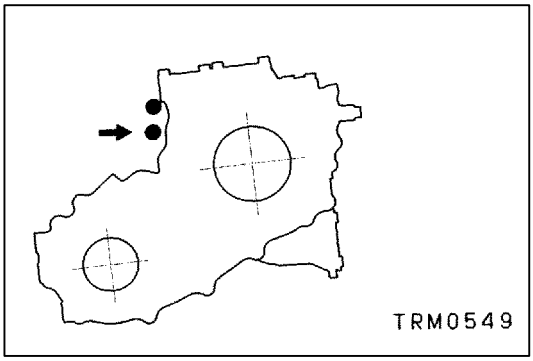


## HIGH/LOW DETECTION SWITCH CONTINUITY CHECK <V5MT1>

Check the continuity between terminals of the gray connector indicated in the illustration.

| Transfer lever position | Terminal No. | |
|---|---|---|
| | 1 | 2 |
| 4H | ○—— | ——○ |
| 4L | ○—— | ——○ |
| 4H-4L | | |

Purchased from www.WorkshopManuals.co.uk

www.WorkshopManuals.co.uk

# TRANSMISSION CONTROL <V5MT1>

## REMOVAL AND INSTALLATION

**Pre-removal Operation**
- Shift the Transmission Control Lever to the N Position.
- Shift the Transfer Control Lever to the 4H Position.

**Post-installation Operation**
Check the Operation of the Transmission and Transfer Control Levers and the Movement in Each Lever Position.

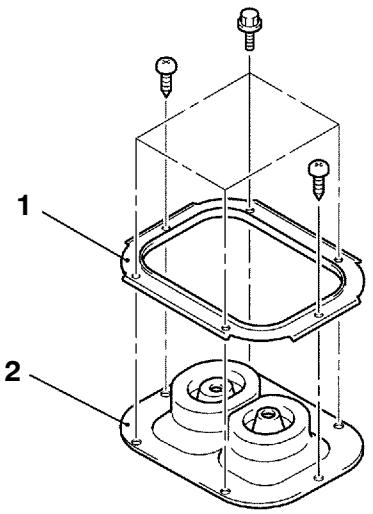


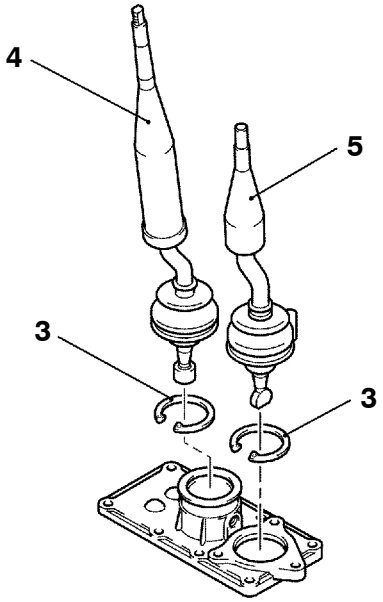


AY0150CA

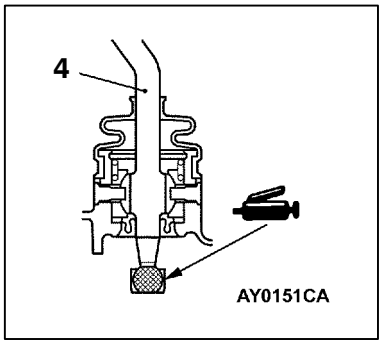


**Transmission control lever assembly removal steps**
- Indicator panel (Refer to GROUP 52A - Floor Console)

1. Retainer plate
2. Shift control boot
3. Snap ring
4. Transmission control lever assembly

**Transfer control lever assembly removal steps**
- Indicator panel (Refer to GROUP 52A - Floor Console)

1. Retainer plate
2. Shift control boot
3. Snap ring
5. Transfer control lever assembly

Purchased from www.WorkshopManuals.co.uk

www.WorkshopManuals.co.uk

# TRANSMISSION CONTROL <V5MT3>

## REMOVAL AND INSTALLATION

**Pre-removal Operation**
Shift the Transmission Control Lever to the N Position.

**Post-installation Operation**
Check the Operation of the Transmission and Transfer Control Levers and the Movement in Each Lever Position.

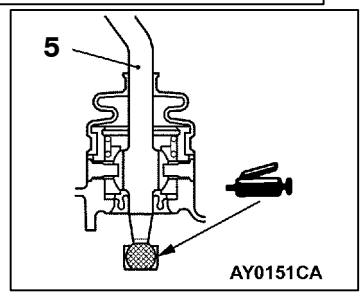


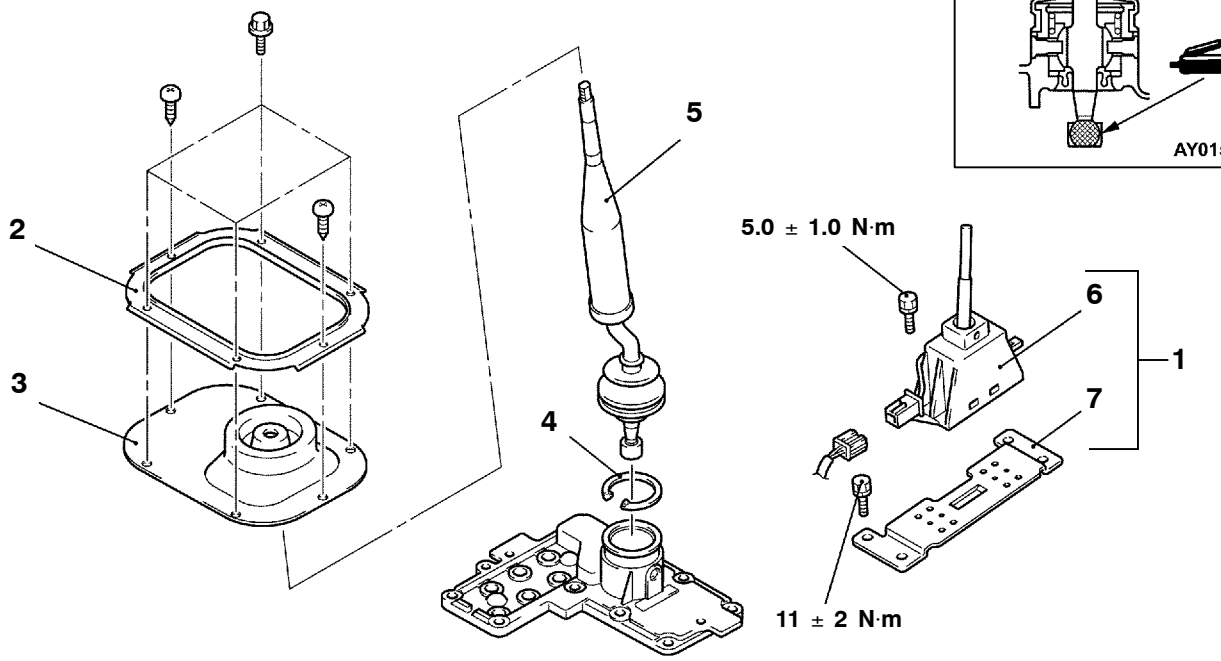


AY0146CA

**Transmission control lever assembly removal steps**

- Indicator panel (Refer to GROUP 52A - Floor Console)

1. Transfer select switch assembly
2. Retainer plate
3. Shift control boot
4. Snap ring
5. Transmission control lever assembly

**Transfer select switch assembly removal steps**

- Indicator panel (Refer to GROUP 52A - Floor Console)

6. Transfer select switch
7. Transfer select switch bracket

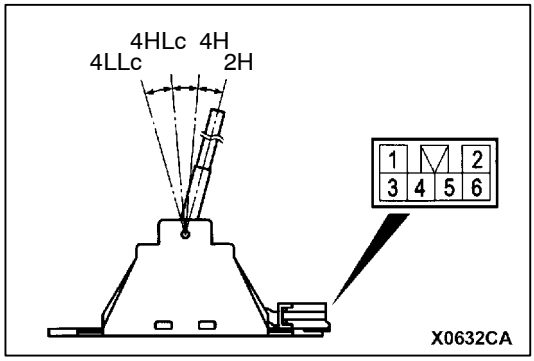


## INSPECTION

### TRANSFER SELECT SWITCH CONTINUITY CHECK

| Switch position | Terminal number | | | | |
|---|---|---|---|---|---|
| | 1 | 2 | 3 | 5 | 6 |
| 2H | ○ | | ○ | | |
| 4H | ○ | | | ○ | |
| 4HLc | ○ | | | | ○ |
| 4LLc | ○ | ○ | | | |

Purchased from www.WorkshopManuals.co.uk

www.WorkshopManuals.co.uk

# TRANSMISSION ASSEMBLY

## REMOVAL AND INSTALLATION

**Caution**
**The rear propeller shaft is made of fiber-reinforced plastic tube, so always refer to GROUP 25 prior to its removal.**

**Pre-removal Operation**
- Transmission and Transfer Control Lever Removal (Refer to P.22-8.)
- Transmission and Transfer Oil Draining (Refer to P.22-6.)
- Front and Rear Propeller Shaft Removal (Refer to GROUP 25 - Propeller Shaft.)
- Front and Center Exhaust Pipe Removal (Refer to GROUP 15 - Exhaust Pipe and Main Muffler)

**Post-installation Operation**
- Front and Center Exhaust Pipe Installation (Refer to GROUP 15 - Exhaust Pipe and Main Muffler)
- Front and Rear Propeller Shaft Installation (Refer to GROUP 25 - Propeller Shaft.)
- Transmission and Transfer Oil Filling (Refer to P.22-6.)
- Transmission and Transfer Control Lever Installation (Refer to P.22-8.)
- Transmission and Transfer Control Lever Operation Check

**<4D5 with V5MT1>**

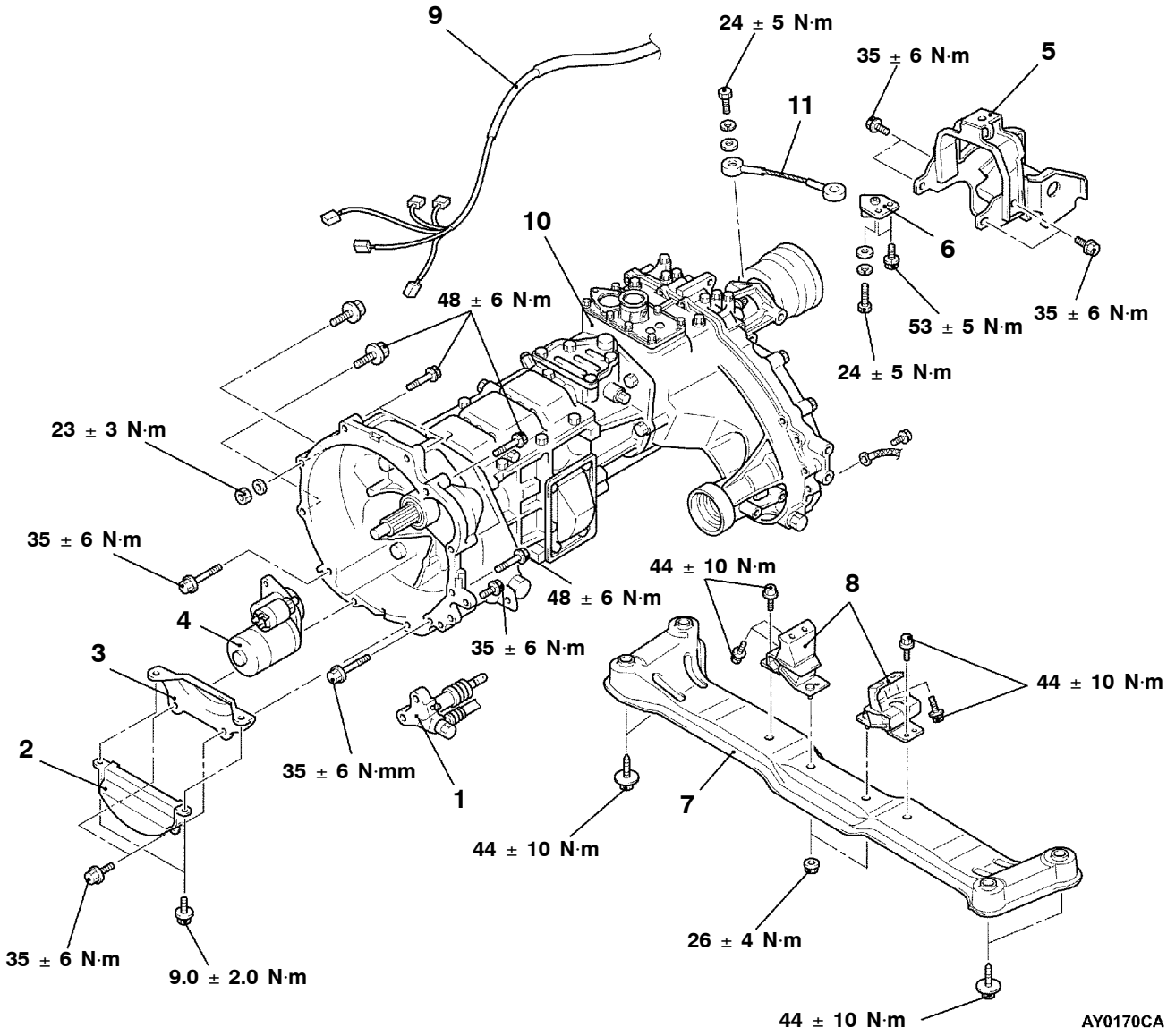


Purchased from www.WorkshopManuals.co.uk

www.WorkshopManuals.co.uk

<4D5 with V5M31>

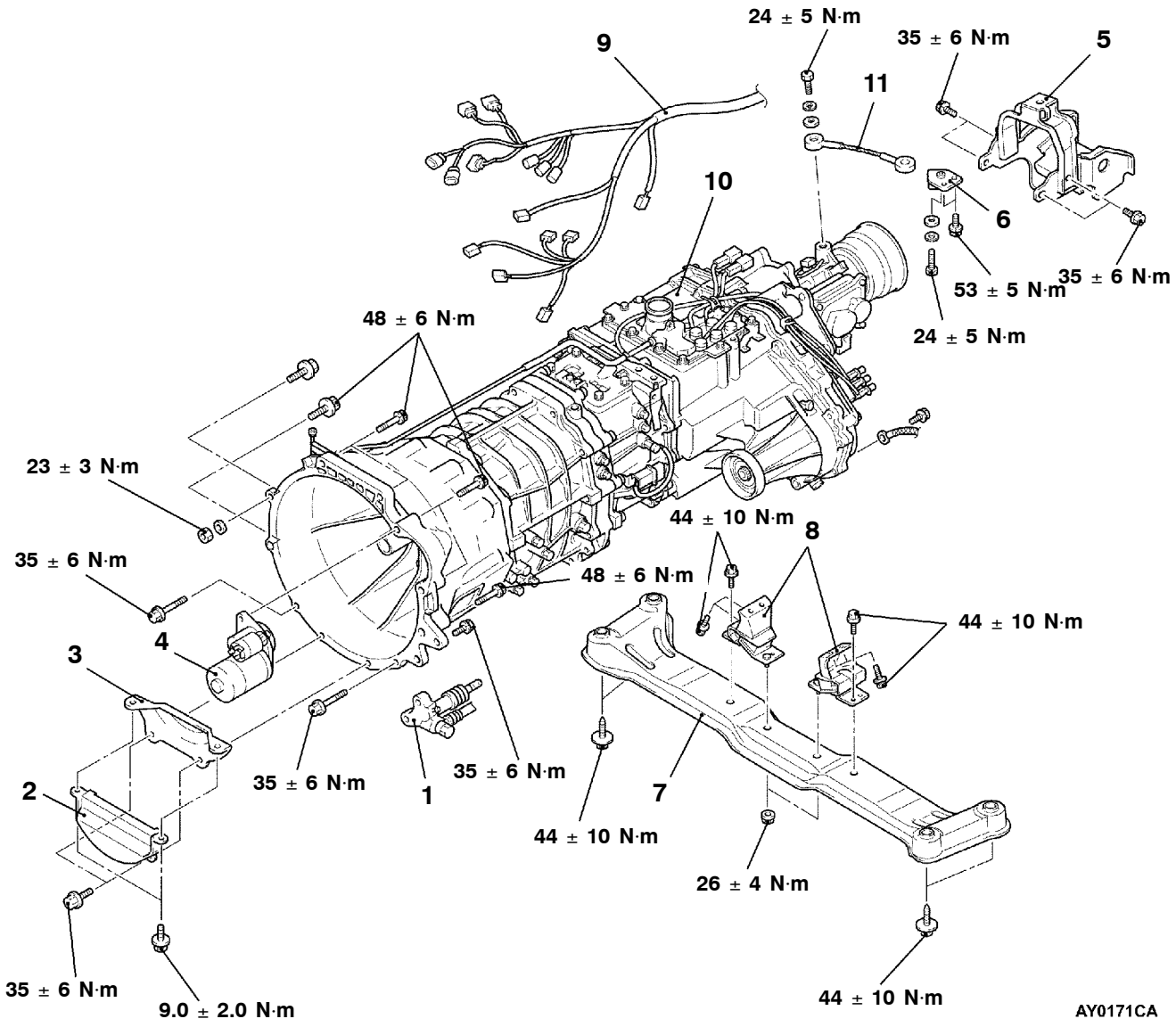


**Removal steps**

1. Clutch release cylinder
2. Space rubber
3. Bell housing cover
4. Starter motor
5. Dynamic damper assembly
6. Tension wire bracket
   - Support the transmission with a transmission jack

◀A▶

7. Transmission mount center member assembly
8. Transmission mount insulator assembly
9. Transmission wiring harness connector connection

▶A◀ 10. Transmission assembly

11. Tension wire

Purchased from www.WorkshopManuals.co.uk

www.WorkshopManuals.co.uk

**<4M4 with V5M31>**

**Pre-removal and Post-installation Operations**
- Skid Plate and Under Cover Removal and Installation
- Transmission Fluid and Transfer Oil Draining and Refilling (Refer to P.22-6.)
- Front and Rear Propeller Shaft Removal and Installation (Refer to GROUP 25.)
- Front Exhaust Pipe and Catalytic Converter Removal and Installation (Refer to GROUP 15.)
- Radiator Shroud Lower Cover Removal and Installation (Refer to GROUP 14.)
- Intercooler Removal and Installation (Refer to GROUP 15)

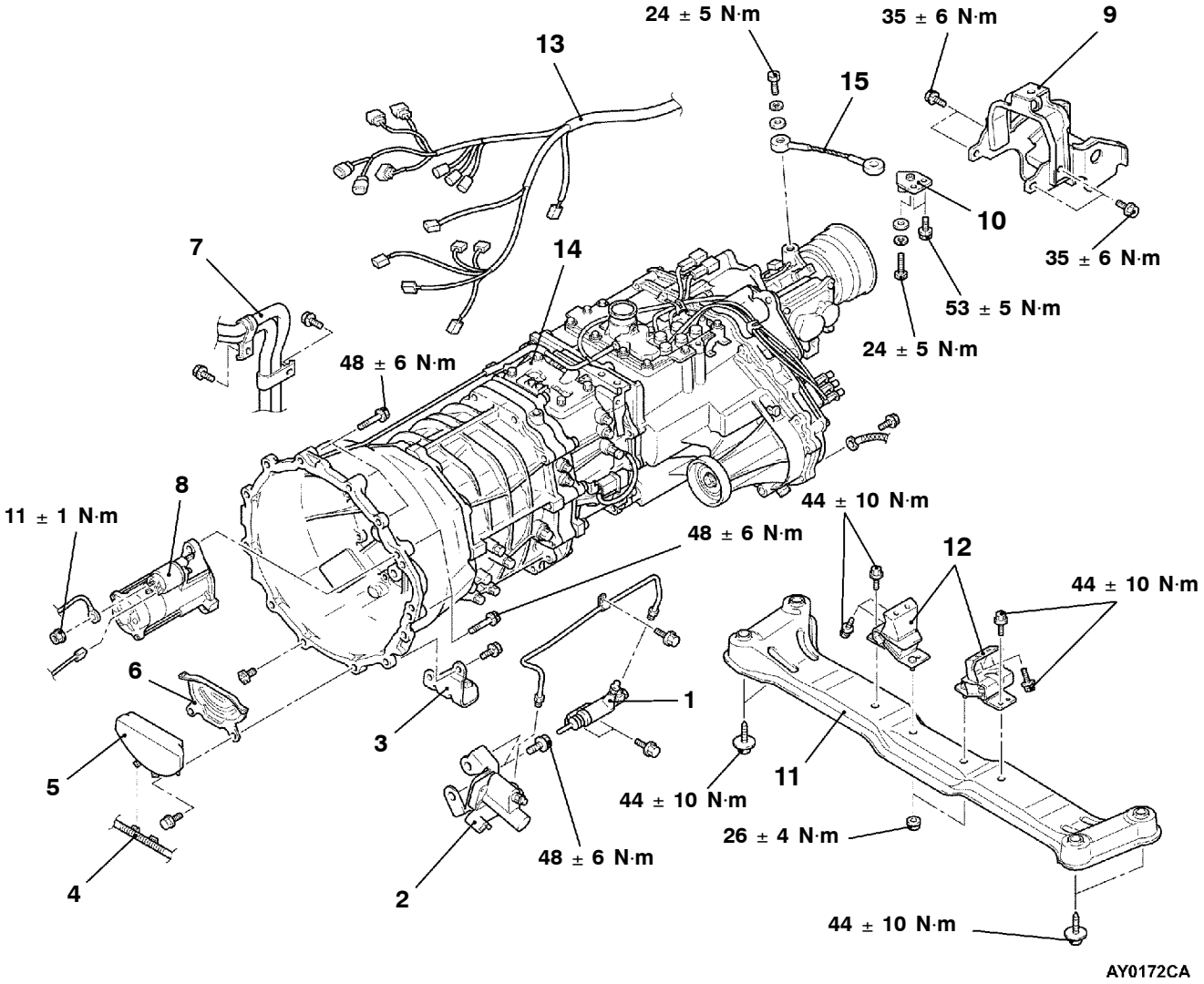


**Removal steps**

1. Clutch release cylinder (Refer to GROUP15)
2. Clutch dumper assembly (Refer to GROUP15)
3. Exhaust support bracket
4. Battery cable connection
5. Spacing rubber
6. Dust cover
7. Heater hose connection
8. Starter motor

Purchased from www.WorkshopManuals.co.uk

www.WorkshopManuals.co.uk

9. Dynamic damper
10. Tension wire bracket
    - Support the transmission with a transmission jack
11. Transmission mount center member assembly
12. Transmission mount insulator assembly

◀A▶

◀B▶

13. Transmission harness connector connection
    - Clutch release bearing disconnection

▶A◀

14. Transmission assembly
15. Tension wire

Purchased from www.WorkshopManuals.co.uk

www.WorkshopManuals.co.uk

<6G7 with V5M31>

**Pre-removal and Post-installation Operations**

- Skid Plate and Under Cover Removal and Installation
- Transmission Fluid and Transfer Oil Draining and Refilling (Refer to P.22-6.)
- Front and Rear Propeller Shaft Removal and Installation (Refer to GROUP 25.)
- Front Exhaust Pipe Removal and Installation (Refer to GROUP 15.)
- Radiator Shroud Lower Cover Removal and Installation (Refer to GROUP 14.)

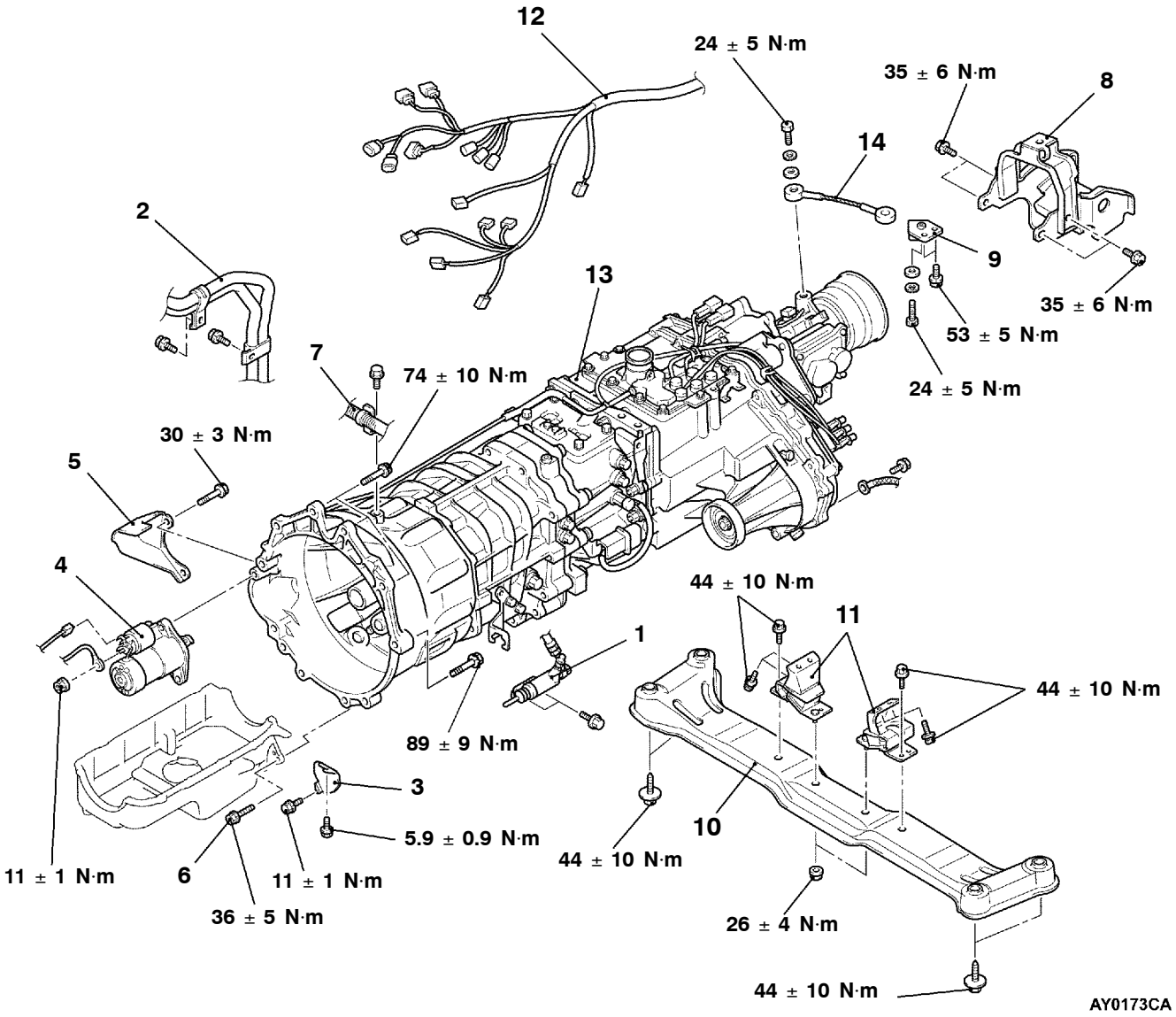


Purchased from www.WorkshopManuals.co.uk

www.WorkshopManuals.co.uk

**Removal steps**

1. Clutch release cylinder (Refer to GROUP15)
2. Heater hose connection
3. Cover
4. Starter motor
5. Starter cover
6. Oil pan connection bolts
7. Battery cable connection
8. Dynamic damper
9. Tension wire bracket
   - Support the transmission with a transmission jack
10. Transmission mount center member assembly
11. Transmission mount insulator assembly
12. ◀A▶ Transmission harness connector connection
    - ◀B▶ Clutch release bearing disconnection
13. ▶A◀ Transmission assembly
14. Tension wire

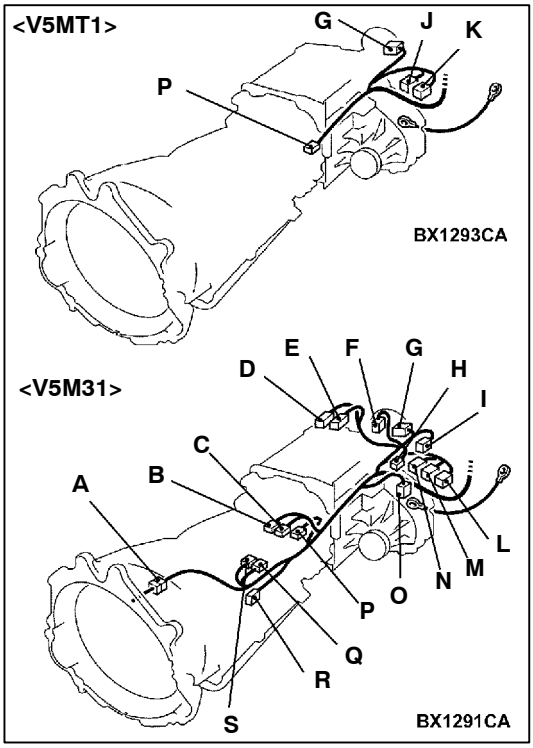


## REMOVAL SERVICE POINT

### ◀A▶ TRANSMISSION WIRING HARNESS CONNECTOR DISCONNECTION

1. Lower the transmission to a position where the transmission harness connector can be disconnected, and then disconnect the connector.
2. Place the disconnected transmission harness so that it stays on the vehicle body.

| Code | Connector name |
|---|---|
| A | Transmission wiring harness and battery wiring harness combination |
| B | Select rail switch <4M4> |
| C | 1st and 2nd rail switch <4M4> |
| D | 4LLC (Direct low range 4WD) switch |
| E | 2WD operation detection switch |
| F | Rear propeller shaft speed sensor |
| G | Vehicle speed sensor |
| H | Oxygen sensor (Rear) |
| I | Shift actuator |
| J | High range/low range detection switch |
| K | 4WD operation detection switch |
| L | 2WD/4WD detection switch |
| M | 4H (Full time 4WD) switch |
| N | Center differential lock detection switch |
| O | Front propeller shaft speed sensor |
| P | Back-up lamp switch |
| Q | Oxygen sensor (Front) |
| R | Back-up lamp switch <4M4> |
| S | 3rd and 4th rail switch <4M4> |

Purchased from www.WorkshopManuals.co.uk

www.WorkshopManuals.co.uk

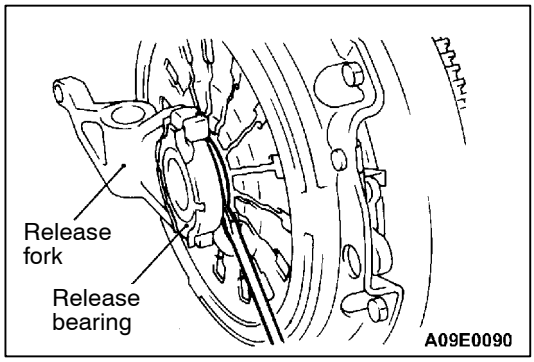


### ◀B▶ CLUTCH RELEASE BEARING DISCONNECTION

1. Remove the service hole cover at the clutch housing.
2. Operate the release fork, and push the release bearing towards the clutch side.
3. Insert the flat-tipped screwdriver to separate the release bearing.

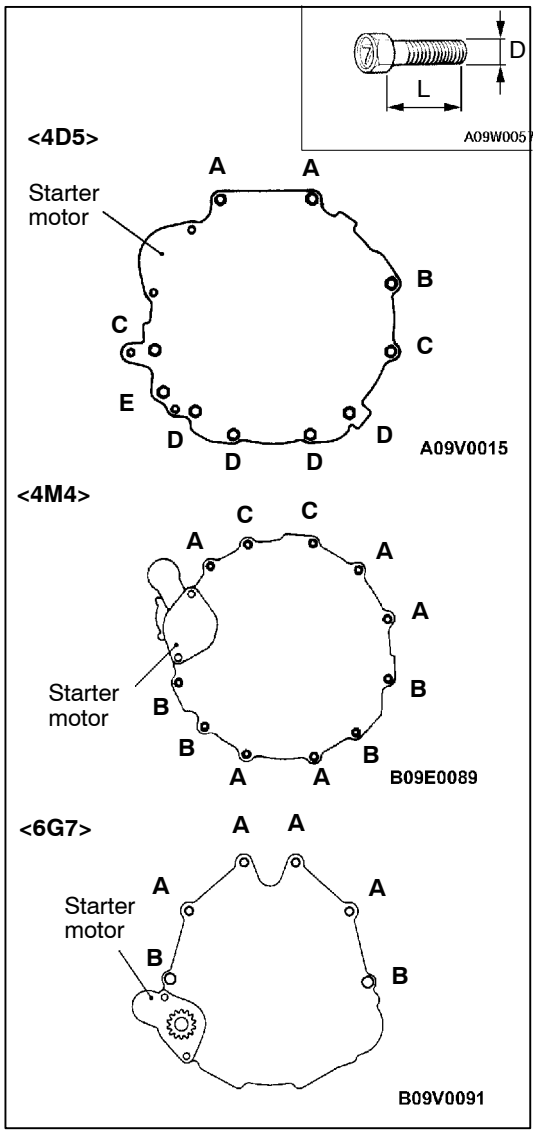


## INSTALLATION SERVICE POINT

### ▶A◀ TRANSMISSION ASSEMBLY INSTALLATION

The sizes of the mounting bolts are different. So be sure not to confuse them.

**<4D5>**

| Bolt | Diameter (D) x Length (L) mm |
|---|---|
| A | 10 x 45 |
| B | 8 x 30 |
| C | 10 x 80 |
| D | 10 x 25 |
| E | 10 x 35 |

**<4M4>**

| Bolt | Diameter (D) x Length (L) mm |
|---|---|
| A | 12 x 25 |
| B | 10 x 45 |
| C | 10 x 50 |

**<6G7>**

| Bolt | Diameter (D) x Length (L) mm |
|---|---|
| A | 12 x 40 |
| B | 12 x 55 |

Purchased from www.WorkshopManuals.co.uk

www.WorkshopManuals.co.uk

# 4WD INDICATOR-ECU/TRANSFER-ECU

## REMOVAL AND INSTALLATION

**Pre-removal and Post-installation Operation**
Indicator panel, Floor console front panel removal and installation
(Refer to GROUP52A - Floor console)

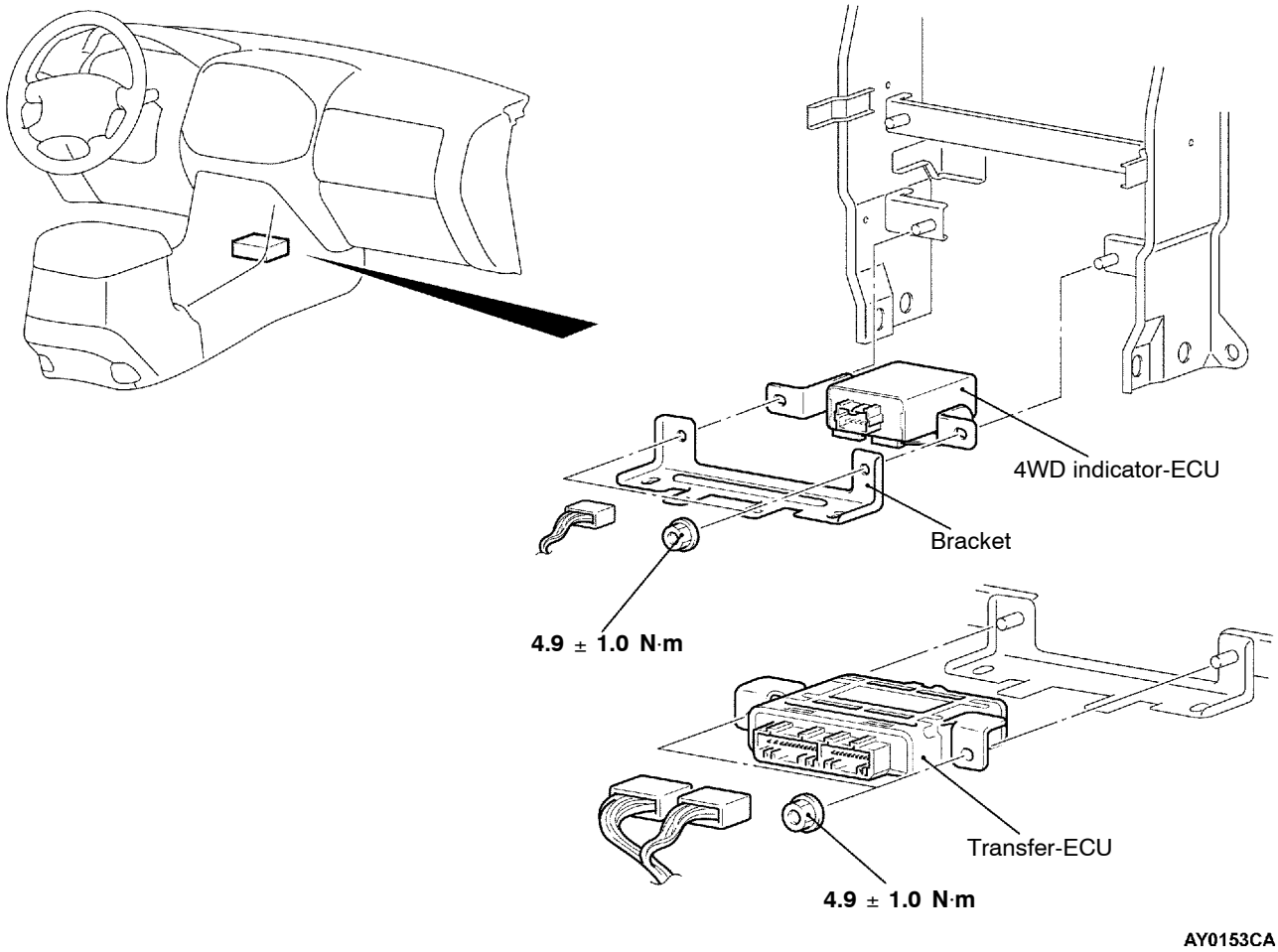


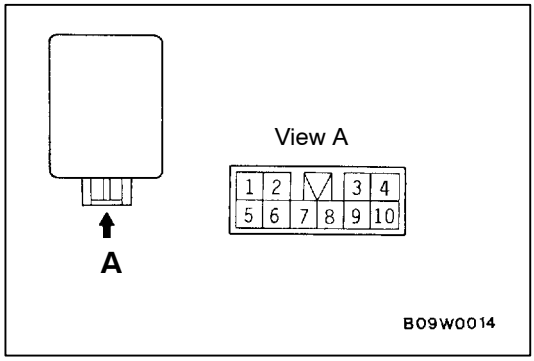


## INSPECTION

### 4WD INDICATOR-ECU

1. Measure the voltage with the control unit and harness still connected.
2. Earth terminal (8) and then measure terminal voltage.

Purchased from www.WorkshopManuals.co.uk

www.WorkshopManuals.co.uk

| Terminal No. | Inspection item | Inspection condition 1: Ignition switch | Inspection condition 2: Transfer lever position | Terminal voltage |
|---|---|---|---|---|
| 1 | Free wheel engage switch | ON | 2H | System voltage |
| | | | 4H*1 | 0 V |
| 2 | 4WD detection switch | ON | 2H | System voltage |
| | | | 4H, 4L | 0 V |
| 3 | Ignition switch (IG1) | OFF | - | 0 V |
| | | ON | - | System voltage |
| 6 | HI/LOW detection switch | ON | Shifting from 4H to 4L or vice versa | System voltage |
| | | | 2H, 4H, 4L | 0 V |
| 7 | Free wheel clutch changeover solenoid valve | ON | 4H, 4L | 0 V |
| | | | 2H*2 | System voltage |
| 10 | 4WD Indicator lamp | ON | 2H | 0 V |
| | | | 4H, 4L | System voltage |

NOTE
*1: When vehicle has been moved once.
*2: Shift the lever from 4H to 2H, and then turn the ignition switch to OFF and then back to ON.

**TRANSFER-ECU**

Measure the terminal voltage (Refer to P.22-3).

Purchased from www.WorkshopManuals.co.uk

www.workshopmanuals.co.uk

# GROUP 22

# MANUAL TRANSMISSION

## GENERAL

### OUTLINE OF CHANGE

With additional vehicle with Emission Regulation Step III compatible 4D5 engine, the service procedure different from service adjustment procedure of the vehicle with 4D5 engine has been established.

## TROUBLESHOOTING <SS4 II>

### INSPECTION CHART FOR DIAGNOSIS CODE

| Diagnosis code | Diagnosis item | | Reference page |
|---|---|---|---|
| 21 | Accelerator pedal position sensor (APS) system <4D5> | Open circuit/Malfunction of sensor | 22-1 |

### INSPECTION PROCEDURE FOR DIAGNOSIS CODE

| **Code No.21 Accelerator pedal position sensor (APS) system <4D5>** | **Probable cause** |
|---|---|
| Code No.21 is output to indicate an open circuit in the APS or an incorrect adjustment when the APS output voltage drops below 0.2 V while the engine is idling. | • Malfunction of APS<br>• Malfunction of harness or connector<br>• Malfunction of transfer-ECU<br>• Malfunction of engine-ECU |

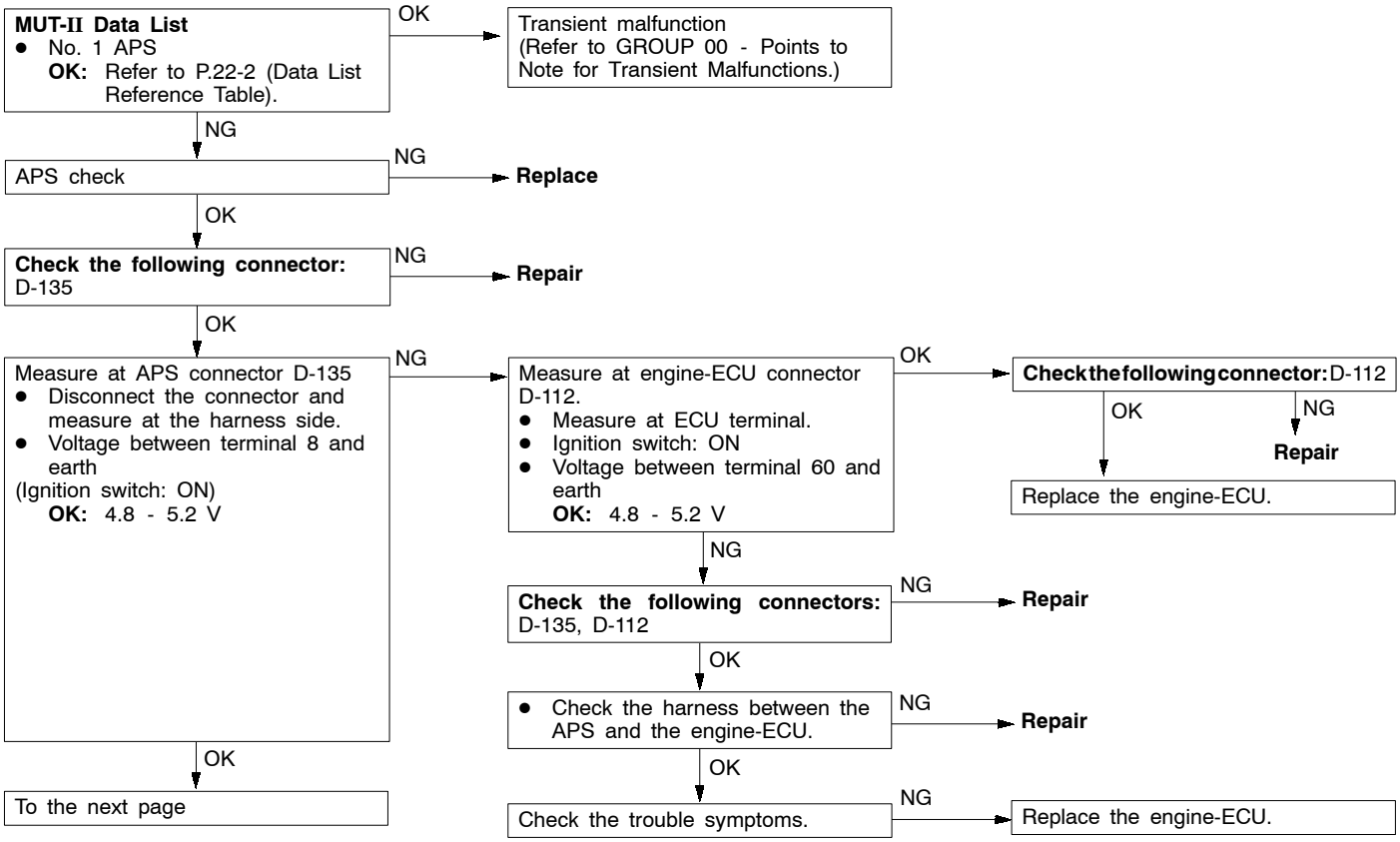


Purchased from www.WorkshopManuals.co.uk

www.WorkshopManuals.co.uk

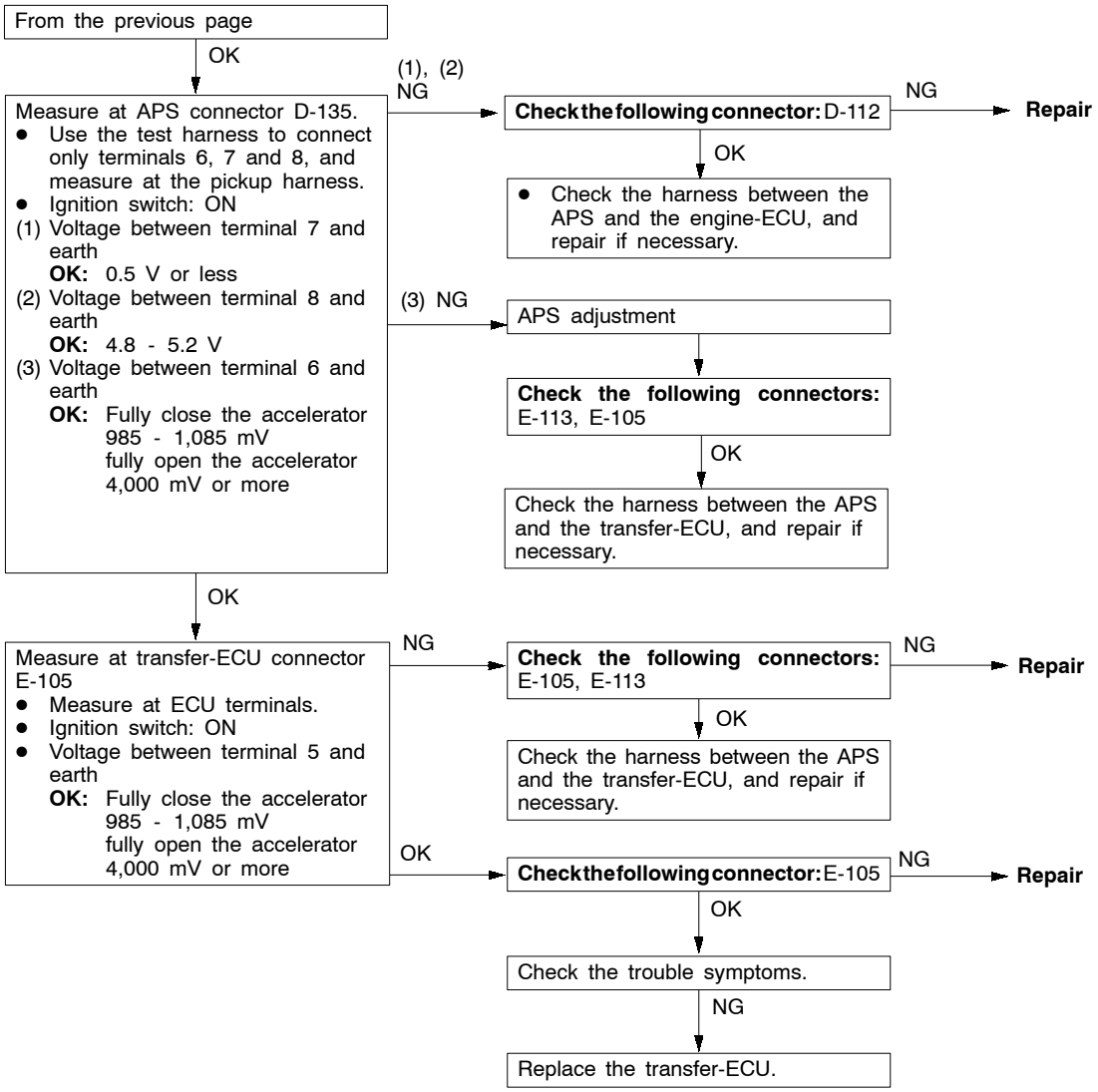


## DATA LIST REFERENCE TABLE

| Data list No. | Check item | Check conditions | | Normal condition |
|---|---|---|---|---|
| 1 | Accelerator pedal position sensor (APS) <4D5> | Engine: Stopped<br>Selector lever position: P | Accelerator pedal: Fully closed | 985 - 1,085 mV |
| | | | Accelerator pedal: Depressed | Gradually increases from the above value. |
| | | | Accelerator pedal: Fully open | 4,000 mV or more |

## CHECK AT TRANSFER-ECU TERMINAL

| Terminal No. | Check item | Check conditions | Standard value |
|---|---|---|---|
| 5 | Accelerator pedal position sensor (APS) <4D5> | Accelerator pedal: Fully closed (engine stopped) | 0.985 - 1.085 V |
| | | Accelerator pedal: Fully open (engine stopped) | 4.0 V or more |

Purchased from www.WorkshopManuals.co.uk

www.WorkshopManuals.co.uk

# AUTOMATIC TRANSMISSION

**Click on the applicable bookmark to selected the required model year.**

Purchased from www.WorkshopManuals.co.uk

www.WorkshopManuals.co.uk


# AUTOMATIC TRANSMISSION

## CONTENTS


**SERVICE SPECIFICATIONS** . . . . . 2

**LUBRICANTS** . . . . . 2

**SPECIAL TOOLS** . . . . . 2

**TROUBLESHOOTING**
**<A/T>** . . . . . 3
**<SS4 II>** . . . . . 70
**<Shift Lock and Key Interlock Mechanisms>** . . . . . 92

**ON-VEHICLE SERVICE** . . . . . 94
- Basic Adjustment Procedures . . . . . 94
- Transfer Oil Check . . . . . 99
- Transfer Oil Change . . . . . 99
- Location of Control Components . . . . . 101
- Control Component Checks . . . . . 102
- Torque Converter Stall Test . . . . . 105
- Fluid Pressure Test . . . . . 106
- Hydraulic Circuit . . . . . 110
- Line Pressure Adjustment . . . . . 111
- Selector Lever Operation Check . . . . . 111
- Transfer Shift Lever Operation Check . . . . . 114
- Transmission Control Cable Adjustment . . . . . 114
- Transfer-ECU Check . . . . . 115
- Position Indicator Lamp Check . . . . . 115

**TRANSMISSION CONTROL*** . . . . . 116

**SHIFT LOCK AND KEY INTERLOCK MECHANISMS*** . . . . . 120

**TRANSMISSION ASSEMBLY** . . . . . 122

**TRANSMISSION OIL COOLER** . . . . . 127

**A/T-ECU** . . . . . 129

**TRANSFER-ECU** . . . . . 130


**WARNING REGARDING SERVICING OF SUPPLEMENTAL RESTRAINT SYSTEM (SRS) EQUIPPED VEHICLES**

**WARNING!**

**(1) Improper service or maintenance of any component of the SRS, or any SRS-related component, can lead to personal injury or death to service personnel (from inadvertent firing of the air bag) or to driver and passenger (from rendering the SRS inoperative).**

**(2) Service or maintenance of any SRS component or SRS-related component must be performed only at an authorized MITSUBISHI dealer.**

**(3) MITSUBISHI dealer personnel must thoroughly review this manual, and especially its GROUP 52B - Supplemental Restraint System (SRS) before beginning any service or maintenance of any component of the SRS or any SRS-related component.**

NOTE
The SRS includes the following components: SRS-ECU, SRS warning lamp, air bag module, clock spring, and interconnecting wiring. Other SRS-related components (that may have to be removed/installed in connection with SRS service or maintenance) are indicated in the table of contents by an asterisk (*).

Purchased from www.WorkshopManuals.co.uk

www.WorkshopManuals.co.uk

# SERVICE SPECIFICATIONS

| Item | | Standard value |
|---|---|---|
| A/T fluid temperature sensor resistance kΩ | At 0°C | 16.7 - 20.5 |
| | At 20°C | 7.3 - 8.9 |
| | At 40°C | 3.4 - 4.2 |
| | At 60°C | 1.9 - 2.2 |
| | At 80°C | 1.0 - 1.2 |
| | At 100°C | 0.57 - 0.69 |
| Damper clutch control (DCC) solenoid valve coil resistance (at 20°C) Ω | | 2.7 - 3.4 |
| Low & reverse (LR) solenoid valve coil resistance (at 20°C) Ω | | 2.7 - 3.4 |
| Second (2ND) solenoid valve coil resistance (at 20°C) Ω | | 2.7 - 3.4 |
| Underdrive solenoid valve (UD solenoid valve) coil resistance (at 20°C) Ω | | 2.7 - 3.4 |
| Overdrive solenoid valve (OD solenoid valve) coil resistance (at 20°C) Ω | | 2.7 - 3.4 |
| Resistance of reduction (RED) solenoid valve coil at (20°C) Ω | | 2.7 - 3.4 |
| Stall speed r/min | 6G7 | 2,200 - 2,700 |
| | 4M4 | 2,400 - 2,900 |
| Line pressure adjustment value kPa | | 1,010 - 1,050 |

# LUBRICANTS

| Item | Brand | Quantity L |
|---|---|---|
| Transmission fluid | DIA QUEEN ATF SP II M, ATF SP III or equivalent | 9.3 |
| Transfer oil | Hypoid gear oil SAE 75W-90 or 75W-85W conforming to API GL-4 | 2.8 |

# SPECIAL TOOLS

| Tools | No. | Name | Application |
|---|---|---|---|
| 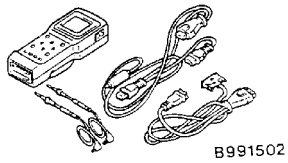  | MB991502 | MUT-II Sub assembly | Diagnosis code checking |
| 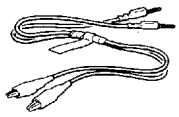 | MB991529 | Diagnosis code checking harness | |
| 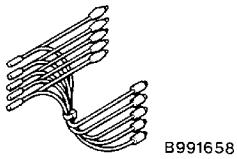  | MB991658 | Test harness | Voltage measurement of APS |
| 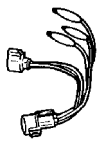 | MD998478 | Test harness (3P, triangle) | Voltage measurement of crank angle sensor |

Purchased from www.WorkshopManuals.co.uk

www.WorkshopManuals.co.uk

| Tools | No. | Name | Application |
|---|---|---|---|
| 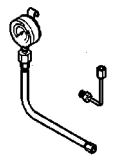 | MD998330 (including MD998331) | Oil pressure gauge (2,942 kPa) | Hydraulic pressure measurement |
| 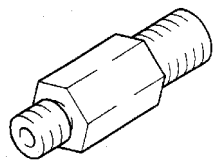 | MD998332 | Adapter | Oil pressure gauge connection |
| 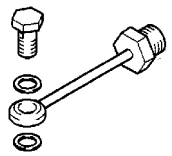 | MD998900 | Adapter | |

# TROUBLESHOOTING <A/T>

## BASIC FLOW OF PROBLEM DIAGNOSIS

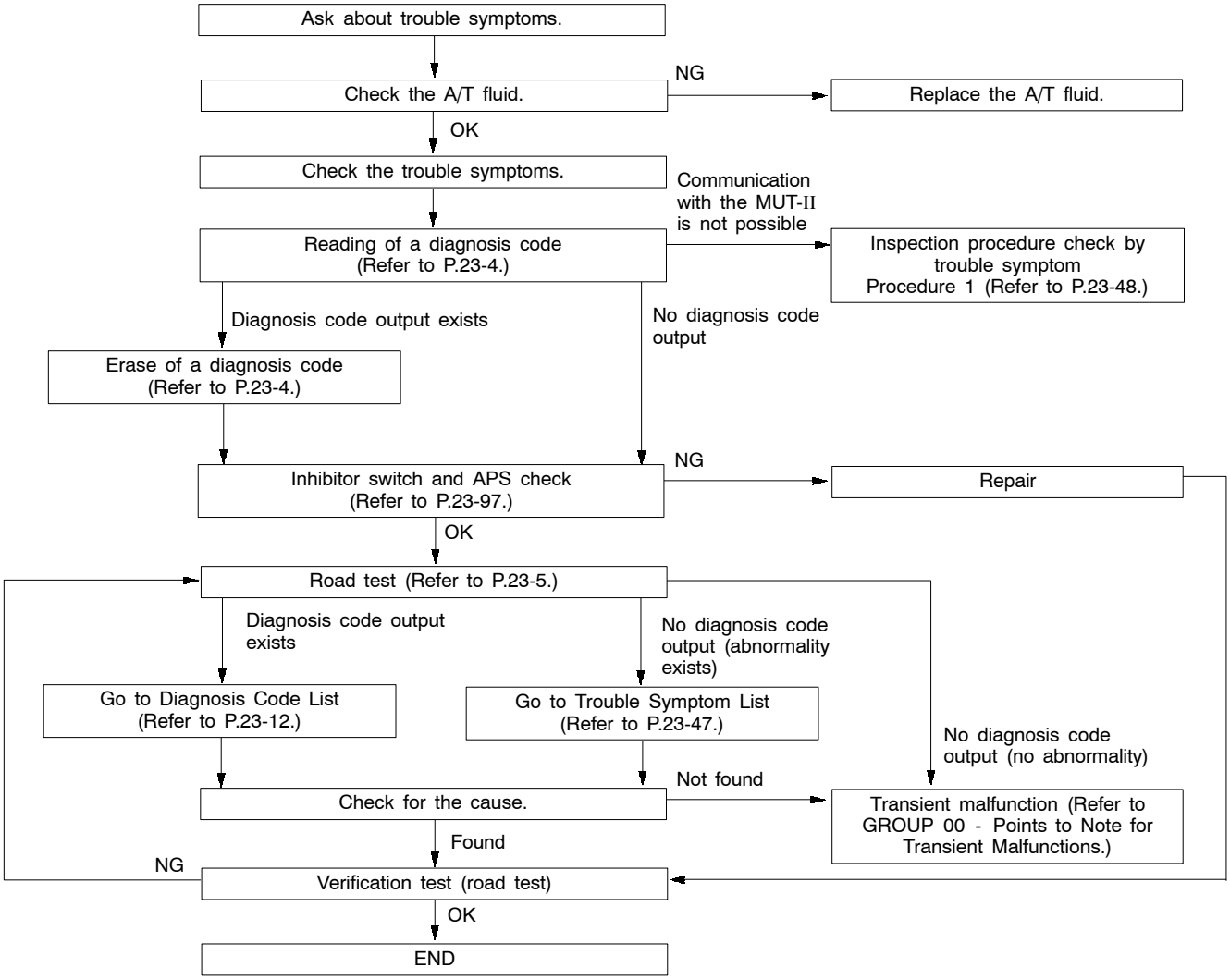


Purchased from www.WorkshopManuals.co.uk

www.WorkshopManuals.co.uk

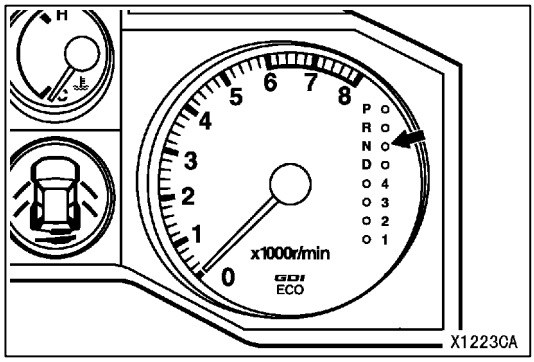


## DIAGNOSIS FUNCTION

### N RANGE LAMP

If there is a problem with any of the following items which are related to the A/T system, the N range lamp will flash at a rate of approximately 1 Hz.
If the N range lamp is flashing at a rate of approximately 1 Hz, check the diagnosis output.

- N range lamp flashing item

| |
|---|
| Input shaft speed sensor system |
| Output shaft sensor system |
| Solenoid valve system |
| Non-synchronization at various shift ranges |
| A/T control relay system |

### READING DIAGNOSIS CODES

Use the MUT-II or the warning lamp (N range indicator lamp) to take a reading of the diagnosis codes. (Refer to GROUP 00 - How to Use Troubleshooting/Inspection Procedures.)

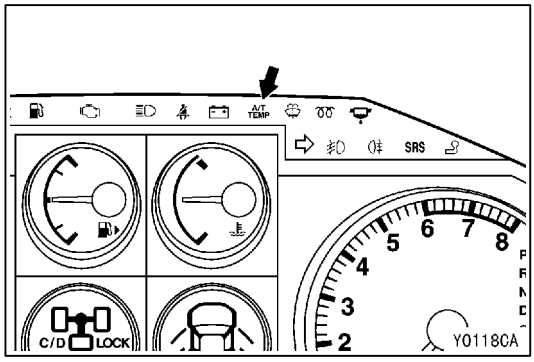


### A/T FLUID TEMPERATURE WARNING LAMP

**Caution**
**If the N range lamp illuminates, this serves as an A/T fluid temperature warning. Stop the vehicle in a safe place and let the engine run at idle until the N range lamp switches off.**

Purchased from www.WorkshopManuals.co.uk

www.WorkshopManuals.co.uk

## ROAD TEST

| No. | Pre-test/operation conditions | Test/operation | Judgment value | Check item | Diagnosis code No. | Inspection procedure if there is an abnormality |
|---|---|---|---|---|---|---|
| 1 | Ignition switch: OFF | Ignition switch<br>(1) ON | Data List No. 54<br>(1) 10 - 12 V | A/T control relay | 54 | A/T control relay system |
| 2 | Ignition switch: ON<br>Engine:Stop<br>Selector lever position: P | Selector lever position<br>(1) P<br>(2) R<br>(3) N<br>(4) D | Data List No. 61<br>(1) P<br>(2) R<br>(3) N<br>(4) D | Inhibitor switch | - | Inhibitor switch system |
| | | Selector lever operation<br>(1) D (1st)<br>(2) Sports mode selected (1st)<br>(3) Lever moved to upshift position and held (2nd)<br>(4) Lever moved to downshift position and held (1st) | Data List<br>No.67 / No.68 / No.69<br>(1) OFF / OFF / OFF<br>(2) ON / OFF / OFF<br>(3) ON / ON / OFF<br>(4) ON / OFF / ON<br>Shift indicator lamp<br>(1) D and 1 illuminate<br>(2) Only 1 illuminates<br>(3) Only 2 illuminates<br>(4) Only 1 illuminates | Select switch<br>Upshift switch<br>Downshift switch | - | Sports mode switch system |
| | | Accelerator pedal<br>(1) Fully closed<br>(2) Depressed<br>(3) Fully opened | Data List No. 11<br>(1) 985 - 1,085 mV<br>(2) Gradually increases from (1)<br>(3) 4,000 mV or more | APS | 11<br>12<br>14 | APS system |
| | | | Data list No.25<br>(1) OFF<br>(2) ON | Wide open throttle switch | 25 | Wide open throttle switch system |
| 2 | Ignition switch: ON<br>Engine: Stop<br>Selector lever position: P | Brake pedal<br>(1) Depressed<br>(2) Released | Data List No. 26<br>(1) ON<br>(2) OFF | Stop lamp switch | 26 | Stop lamp switch system |
| | | Transfer shift lever position<br>(1) Except for 4LLc<br>(2) 4LLc | Data List No. 75<br>(1) OFF<br>(2) ON | 4LLc switch | - | 4LLc switch system |

Purchased from www.WorkshopManuals.co.uk

www.WorkshopManuals.co.uk

| No. | Pre-test/operation conditions | Test/operation | Judgment value | Check item | Diagnosis code No. | Inspection procedure if there is an abnormality |
|---|---|---|---|---|---|---|
| 3 | Ignition switch: START<br>Engine: Stopped | Starting test at P or N position | Starting should be possible | Starting possible/not possible | - | Starting not possible |
| 4 | Driving after engine has warmed up | Drive for 15 minutes or more until the A/T fluid temperature rises to 70 - 80°C. | Data list No.15<br>Gradually rises to 70 - 80°C | A/T fluid temperature sensor | 15 | A/T fluid temperature sensor system |
| 5 | Engine: Idling<br>Selector lever position: N | Brake pedal (re-test)<br>(1) Depressed<br>(2) Released | Data List No. 26<br>(1) ON<br>(2) OFF | Stop lamp switch | 26 | Stop lamp switch system |
| | | A/C switch<br>(1) ON<br>(2) OFF | Data List No. 65<br>(1) ON<br>(2) OFF | Dual pressure switch | - | Dual pressure switch system |
| | | Accelerator pedal<br>(1) Fully closed<br>(2) Apply | Data List No. 21<br>(1) The engine speed displayed on the tachometer is identical to the engine speed displayed on MUT-II.<br>(2) Gradually increases from (1) | Crank angle sensor <6G7><br>Engine speed sensor <4M4> | 21 | Crank angle sensor system <6G7><br>Engine speed sensor system <4M4> |
| | | | Data List<br>No.73 <6G7><br>No.76 <4M4><br>(2) Data changes. | Communication with engine-ECU | 51 | Serial communication system |
| | | Selector lever position<br>(1) N to D<br>(2) N to R | No abnormal shock during shifting<br>Within 2 seconds of time lag | Malfunction when starting off | - | Engine stalls during shifting |
| | | | | | - | N-to-D shocks, large time lag |
| | | | | | - | N-to-R shocks, large time lag |
| | | | | | - | N-to-D, N-to-R shocks, large time lag |
| | | | | Driving not possible | - | Does not move forward |
| | | | | | - | Does not reverse |
| | | | | | - | Does not move (forward or reverse) |

Purchased from www.WorkshopManuals.co.uk

www.WorkshopManuals.co.uk

| No. | Pre-test/operation conditions | Test/operation | Judgment value | Check item | Diagnosis code No. | Inspection procedure if there is an abnormality |
|---|---|---|---|---|---|---|
| 6 | Selector lever position:<br>Sports mode<br>(Must be done on a level and straight road.) | Selector lever position and engine<br>(1) Idling in 1st (Vehicle stopped)<br>(2) Driving at a constant speed of 10 km/h in 1st<br>(3) Driving at a constant speed of 30 km/h in 2nd<br>(4) Driving at a constant speed of 50 km/h in 3rd<br>(5) Driving at a constant speed of 50 km/h in 4th<br>(6) Driving at a constant speed of 70 km/h in 5th<br>(Each condition should be maintained for 10 seconds or more) | Data List No. 63<br>(2) 1st<br>(3) 2nd<br>(4) 3rd<br>(5) 4th<br>(6) 5th | Shift condition | - | - |
| | | | Data List No. 31<br>(2) 0%<br>(3) 100%<br>(4) 100%<br>(5) 100%<br>(6) 100% | Low & reverse solenoid valve (LR solenoid valve) | 31 | LR solenoid valve system |
| | | | Data List No. 32<br>(2) 0%<br>(3) 0%<br>(4) 0%<br>(5) 0%<br>(6) 100% | Underdrive solenoid valve (UD solenoid valve) | 32 | UD solenoid valve system |
| | | | Data List No. 33<br>(2) 100%<br>(3) 0%<br>(4) 100%<br>(5) 100%<br>(6) 0% | Second solenoid valve (2ND solenoid valve) | 33 | 2nd solenoid valve system |
| | | | Data List No. 34<br>(2) 100% (5) 0%<br>(3) 100% (6) 0%<br>(4) 0% | Overdrive solenoid valve (OD solenoid valve) | 34 | OD solenoid valve system |
| | | | Data List No. 35<br>(2) 0% (5) 100%<br>(3) 0% (6) 100%<br>(4) 0% | Reduction solenoid valve (RED solenoid valve) | 35 | RED solenoid valve system |
| | | | Data List No. 29<br>(1) 0 km/h<br>(5) 50 km/h | Vehicle speed sensor | - | Vehicle speed sensor system |
| | | | Data List No. 22<br>(5) 1,300 - 1,600 r/min | Input shaft speed sensor | 22 | Input shaft speed sensor system |
| | | | Data List No. 23<br>(5) 1,300 - 1,600 r/min | Output shaft speed sensor | 23 | Output shaft sensor system |
| | | Selector lever position and engine<br>(1) Driving at 30 km/h in 2 range, then fully close the accelerator.<br>(2) Driving at a constant speed of 50 km/h in 4th | Data List No. 36<br>(1) 70% - 90% to 0%<br>(2) 70% - 90% | Damper clutch control solenoid valve (DCC solenoid valve) | 36<br>52 | DCC solenoid valve system |
| | | | Data List No. 52<br>(1) -300 - -100 r/min or 100 - 300 r/min<br>(2) -10 - 10 r/min | | | |

Purchased from www.WorkshopManuals.co.uk

www.WorkshopManuals.co.uk

| No. | Pre-test/operation conditions | Test/operation | Judgment value | Check item | Diagnosis code No. | Inspection procedure if there is an abnormality |
|---|---|---|---|---|---|---|
| 7 | Suspends the INVECS-II function using MUT-II Selector level position:D (Must be done on a level and straight road.) | Use the MUT-II to monitor data list Nos. 11, 23 and 63.<br>(1) Accelerate to 5th gear at an APS output of 1.5 V (opening angle 30%).<br>(2) Slowly decelerate and stop.<br>(3) Accelerate to 5th gear at an APS output of 2.5 V (opening angle 50%).<br>(4) At 60 km/h in 5th, select Sports mode and shift down to 4th.<br>(5) At 40 km/h in 4th, select Sports mode and shift down to 3rd.<br>(6) At 20 km/h in 3rd, shift down to 2nd.<br>(7) At 20 km/h in 2nd, shift down to 1st. | For (1), (2) and (3), the output shaft speed (vehicle speed) should be identical, and there should be no abnormal shocks. For (4), (5) and (6), downshifting should occur immediately after the operation is carried out. | Problem during shifting | - | Shocks, engine racing |
| | | | | Incorrect shift points | - | All points |
| | | | | | - | Some points |
| | | | | No shifting | - | No diagnosis codes |
| | | | | | 22 | Input shaft speed sensor system |
| | | | | | 23 | Output shaft sensor system |
| | | | | No shifting from 1st to 2nd, or no shifting from 2nd to 1st | 31 | LR solenoid valve system |
| | | | | | 33 | 2nd solenoid valve system |
| | | | | | 41 | 1st without completion of shifting |
| | | | | | 42 | 2nd without completion of shifting |
| | | | | No shifting from 2nd to 3rd, or no shifting from 3rd to 2nd | 33 | 2nd solenoid valve system |
| | | | | | 34 | OD solenoid valve system |
| | | | | | 42 | 2nd without completion of shifting |
| | | | | | 43 | 3rd without completion of shifting |
| | | | | No shifting from 3rd to 4th, or no shifting from 4th to 3rd | 31 | LR solenoid valve system |
| | | | | | 35 | RED solenoid valve system |
| | | | | | 43 | 3rd without completion of shifting |
| | | | | | 44 | 4th without completion of shifting |
| | | | | No shifting from 4th to 5th, or no shifting from 5th to 4th | 32 | UD solenoid valve system |
| | | | | | 33 | 2nd solenoid valve system |
| | | | | | 44 | 4th without completion of shifting |
| | | | | | 45 | 5th without completion of shifting |

Purchased from www.WorkshopManuals.co.uk

www.WorkshopManuals.co.uk

| No. | Pre-test/operation conditions | Test/operation | Judgment value | Check item | Diagnosis code No. | Inspection procedure if there is an abnormality |
|---|---|---|---|---|---|---|
| 8 | Selector lever position: N | Use the MUT-II to monitor data list Nos. 22 and 23.<br>(1) Select R and drive at 10 km/h. | The ration of data list No. 22 and No. 23 should be the same as the transmission ratio when reversing. | No shifting | 22 | Input shaft speed sensor system |
| | | | | | 23 | Output shaft sensor system |
| | | | | | 46 | Reverse without completion of shifting |

## SHIFT PATTERN

**<4M4>**

**Upshift pattern**

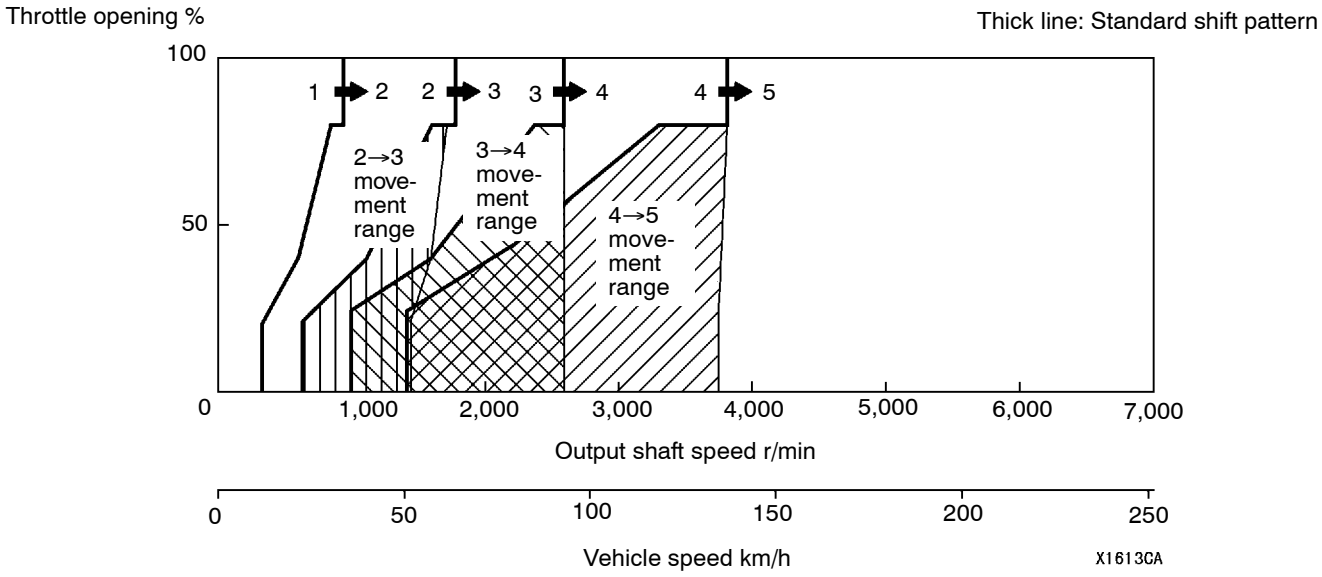


Purchased from www.WorkshopManuals.co.uk

www.WorkshopManuals.co.uk

## Downshift pattern

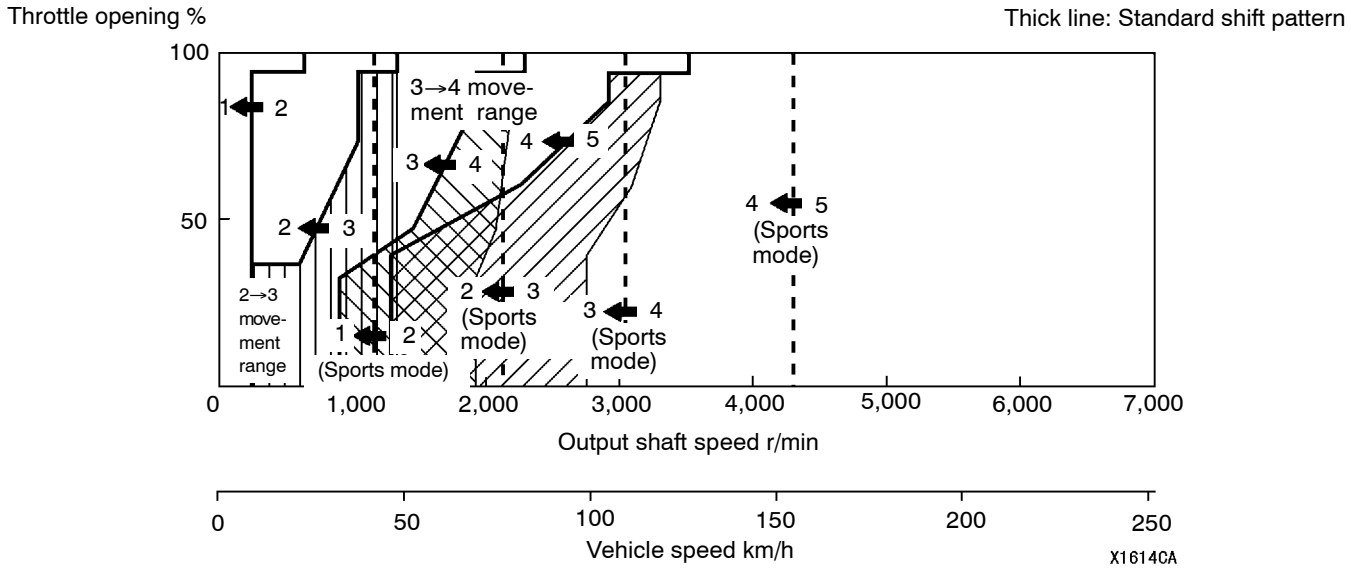


## <6G7>

## Upshift pattern

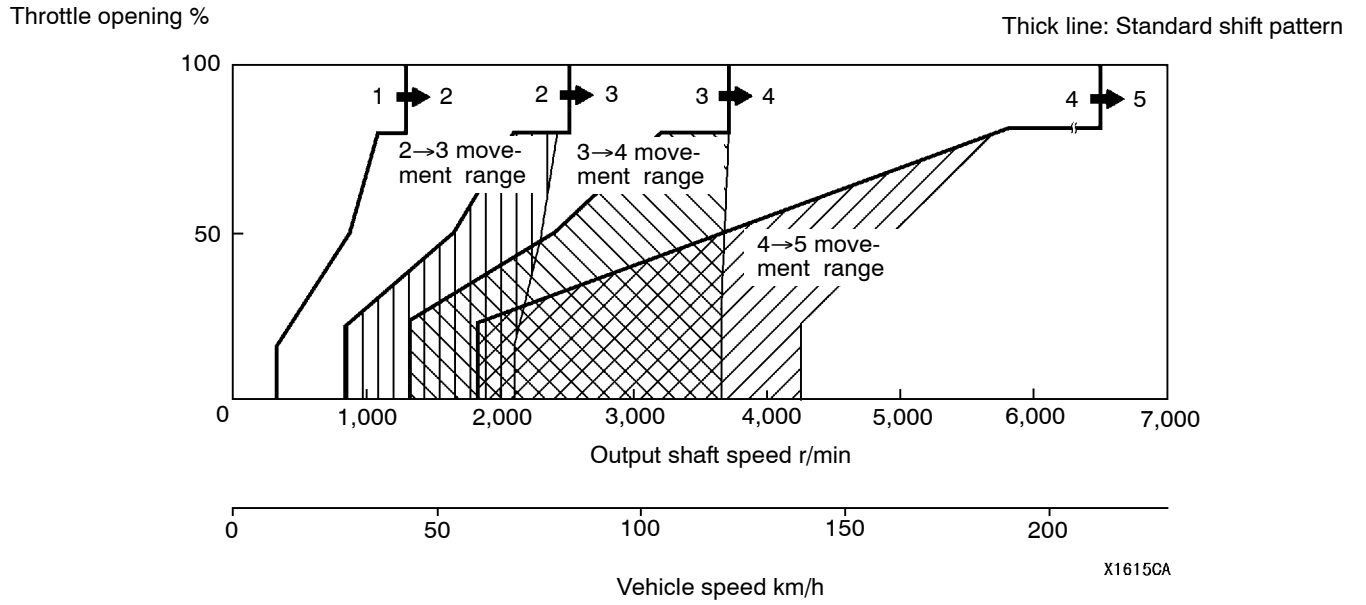


Purchased from www.WorkshopManuals.co.uk

www.WorkshopManuals.co.uk

## Downshift pattern

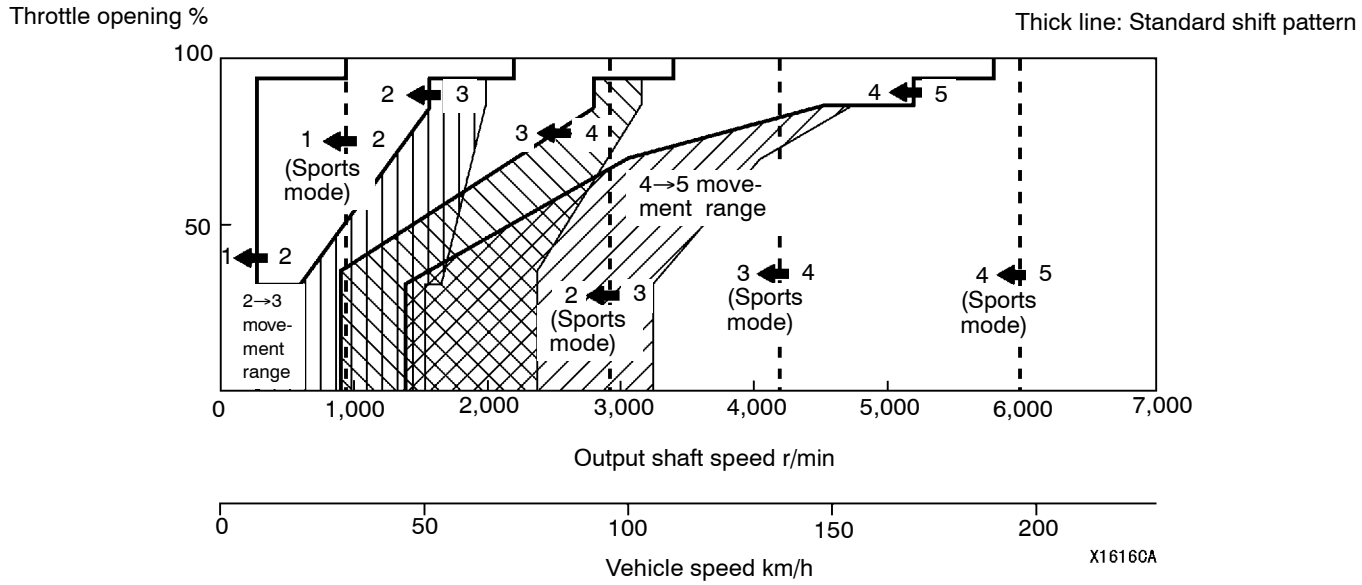


Purchased from www.WorkshopManuals.co.uk

www.WorkshopManuals.co.uk

## CHART CLASSIFIED BY DIAGNOSIS CODE

| Diagnosis code | Diagnosis item | | Reference page |
|---|---|---|---|
| 11 | Accelerator pedal position sensor (APS) system | Short-circuit | 23-13 |
| 12 | | Open circuit | 23-14 |
| 14 | | Incorrect sensor adjustment | 23-15 |
| 15 | A/T fluid temperature sensor system | Open circuit | 23-17 |
| 21 | Crank angle sensor system <6G7> or engine speed sensor system <4M4> | Open circuit | 23-18 |
| 22 | Input shaft speed sensor system | Short-circuit/Open circuit | 23-20 |
| 23 | Output shaft speed sensor system | Short-circuit/Open circuit | 23-22 |
| 25 | Wide open throttle switch system | Short-circuit/Open circuit | 23-24 |
| 26 | Stop lamp switch system | Short-circuit | 23-25 |
| 31 | LR solenoid valve system | Short-circuit/Open circuit | 23-26 |
| 32 | UD solenoid valve system | Short-circuit/Open circuit | 23-27 |
| 33 | 2nd solenoid valve system | Short-circuit/Open circuit | 23-28 |
| 34 | OD solenoid valve system | Short-circuit/Open circuit | 23-29 |
| 35 | RED solenoid valve system | Short-circuit/Open circuit | 23-30 |
| 36 | DCC solenoid valve system | Short-circuit/Open circuit | 23-31 |
| 41 | 1st without completion of shifting | | 23-32 |
| 42 | 2nd without completion of shifting | | 23-34 |
| 43 | 3rd without completion of shifting | | 23-36 |
| 44 | 4th without completion of shifting | | 23-38 |
| 45 | 5th without completion of shifting | | 23-40 |
| 46 | Reverse without completion of shifting | | 23-42 |
| 51 | Problem communicating with engine-ECU | | 23-43 |
| 52 | Damper clutch control system | System malfunction | 23-44 |
| 54 | A/T control relay system | Short-circuit to earth/Open circuit | 23-45 |
| 56 | N range lamp system | Short-circuit to earth | 23-46 |

Purchased from www.WorkshopManuals.co.uk

www.WorkshopManuals.co.uk

## INSPECTION PROCEDURES CLASSIFIED BY DIAGNOSIS CODE

| Code No. 11 Accelerator pedal position sensor (APS) short-circuit system | Probable cause |
|---|---|
| If the APS output during idling is 4.8 V or higher, it is judged that there is excessive output, and code No. 11 is output. | • Malfunction of APS<br>• Malfunction of harness or connector<br>• Malfunction of engine-A/T-ECU <6G7><br>• Malfunction of A/T-ECU <4M4><br>• Malfunction of engine-ECU <4M4> |

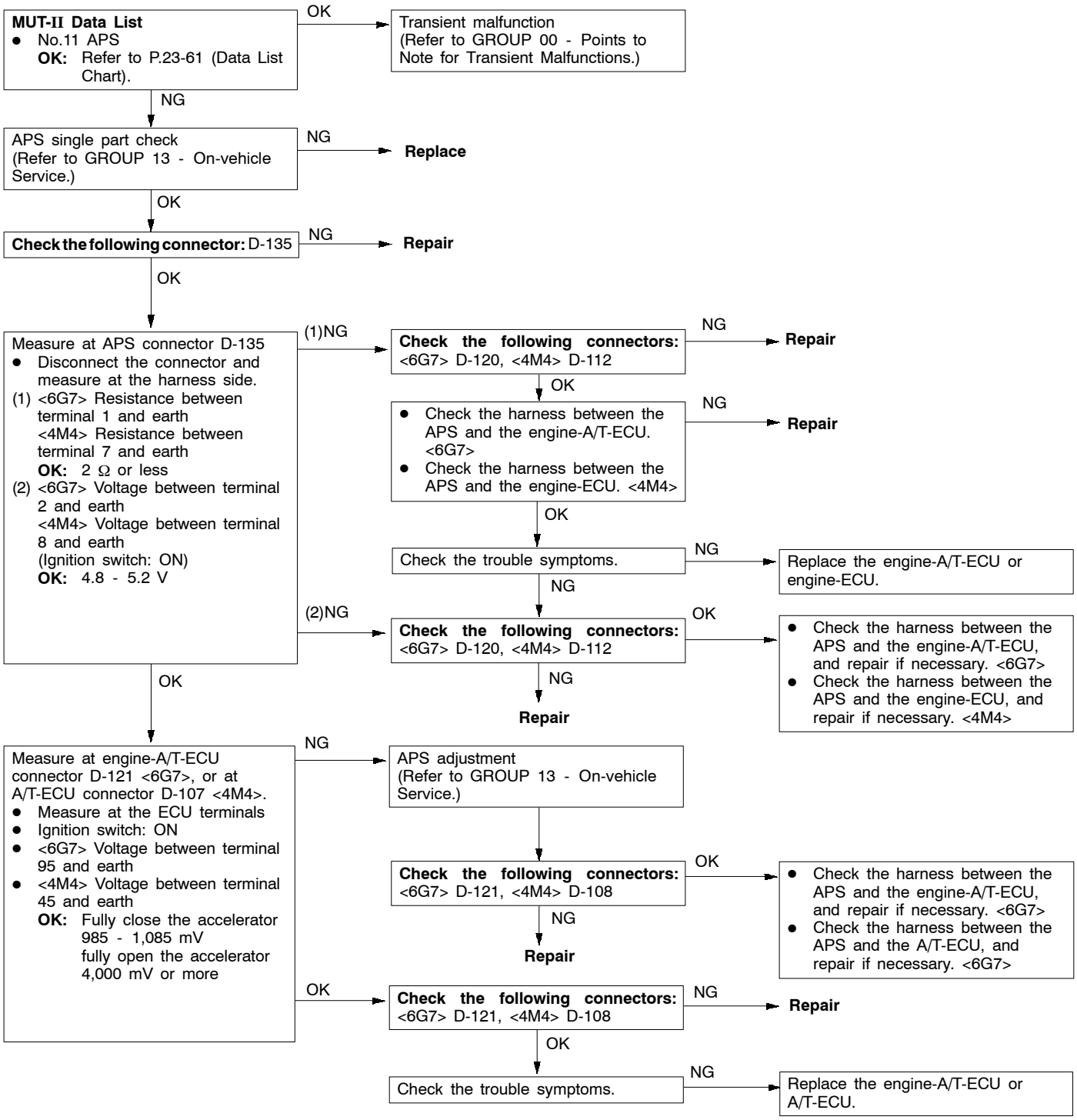


Purchased from www.WorkshopManuals.co.uk

www.WorkshopManuals.co.uk

| Code No. 12 Accelerator pedal position sensor (APS) open circuit system | Probable cause |
|---|---|
| When the APS output is 0.2 V or less while the engine is idling, it is judged that output is too low and code No. 12 is output. | • Malfunction of APS<br>• Malfunction of harness or connector<br>• Malfunction of engine-A/T-ECU <6G7><br>• Malfunction of A/T-ECU <4M4><br>• Malfunction of engine-ECU <4M4> |

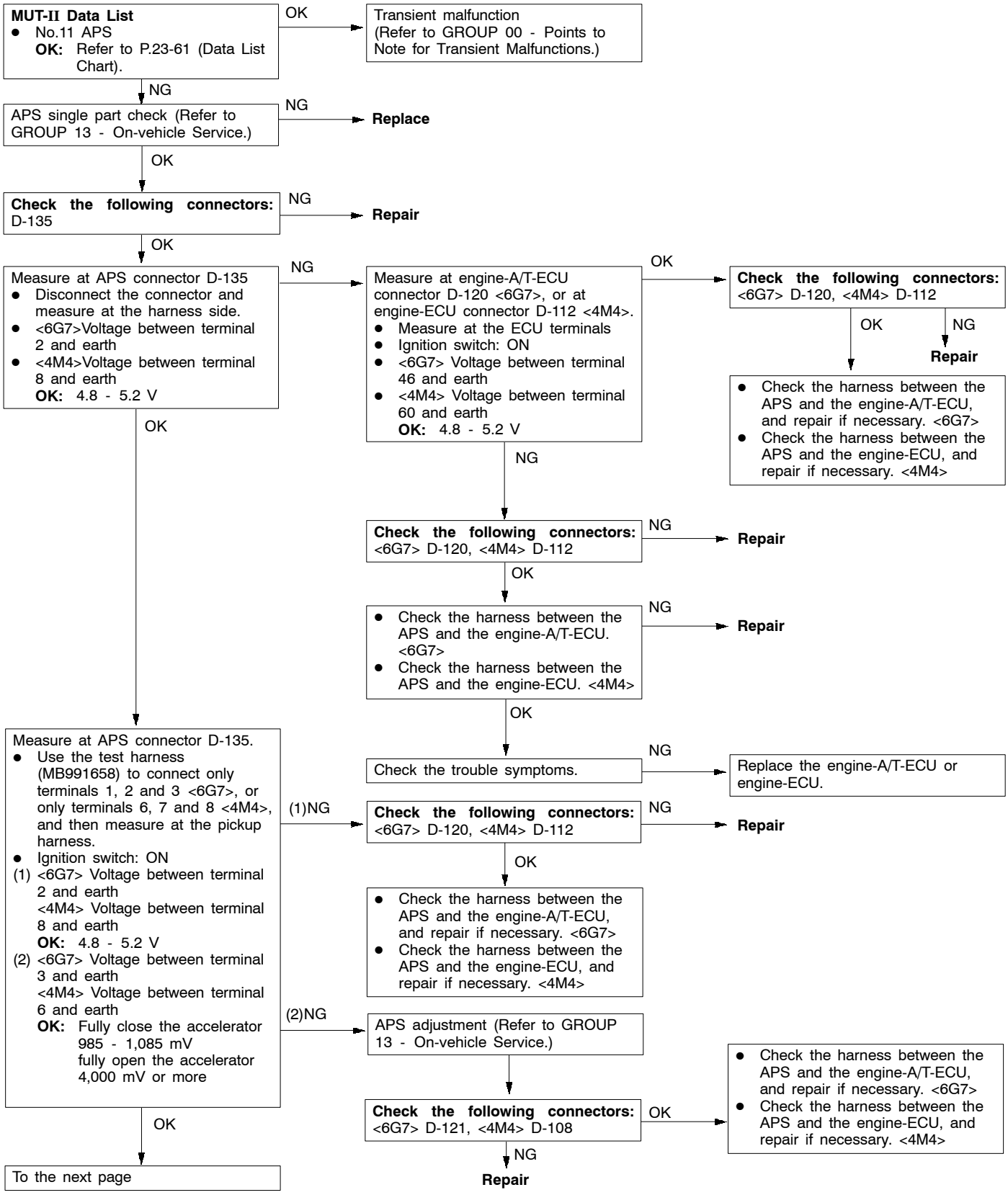


Purchased from www.WorkshopManuals.co.uk

www.WorkshopManuals.co.uk

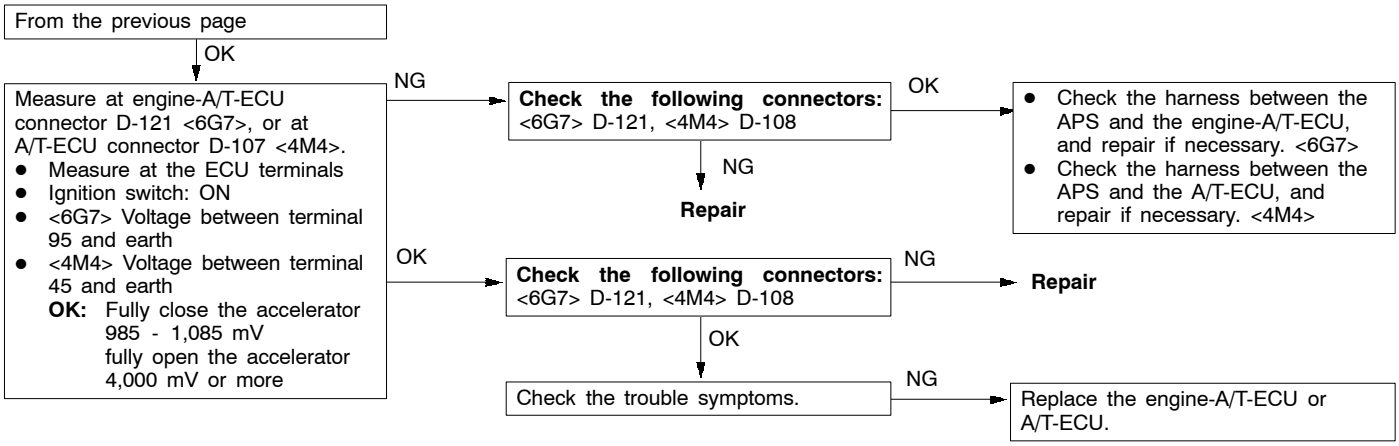


| Code No. 14 Accelerator pedal position sensor (APS) incorrect adjustment system | Probable cause |
|---|---|
| If the APS output is 0.2 V or less or 1.2 V or higher while the engine is idling, it is judged that the APS is incorrectly adjusted, and code No. 14 is output. | ● Malfunction of APS<br>● Malfunction of harness or connector<br>● Malfunction of engine-A/T-ECU <6G7><br>● Malfunction of A/T-ECU <4M4><br>● Malfunction of engine-ECU <4M4> |

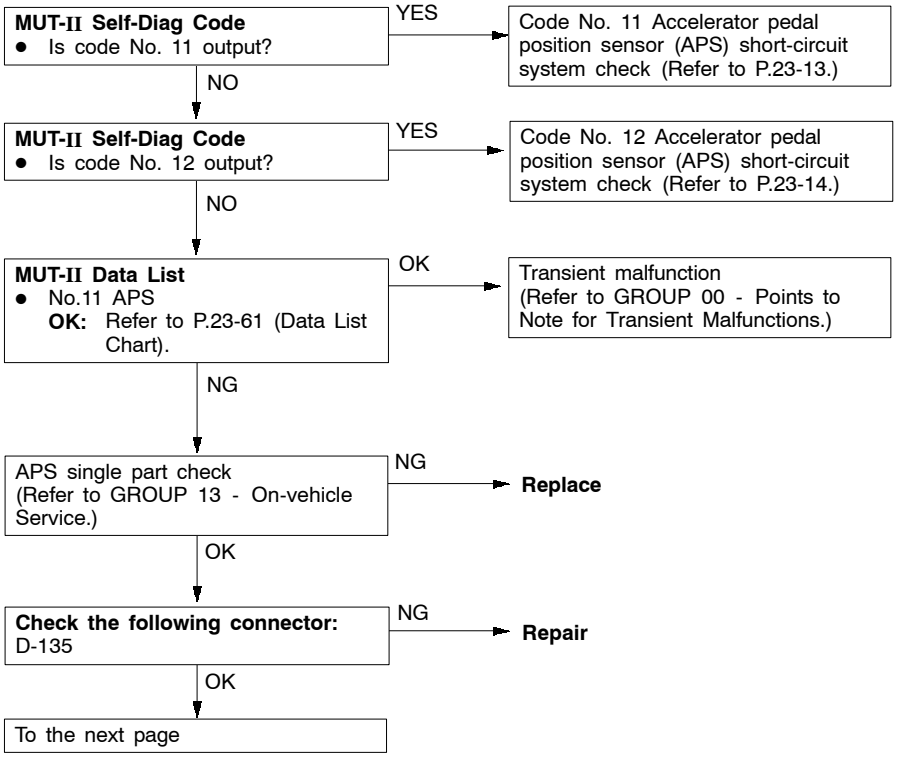


Purchased from www.WorkshopManuals.co.uk

www.WorkshopManuals.co.uk

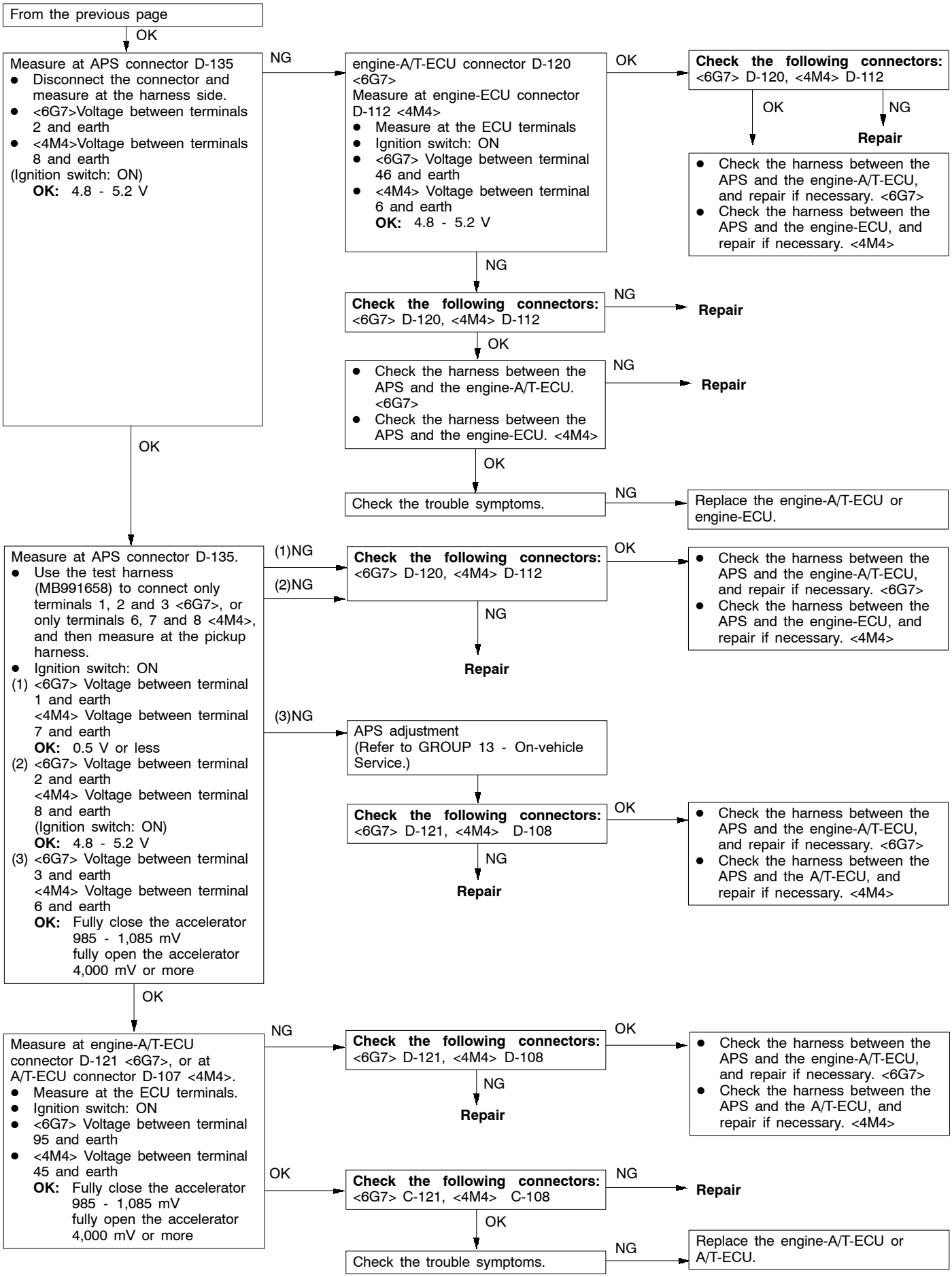


Purchased from www.WorkshopManuals.co.uk

www.WorkshopManuals.co.uk

| Code No. 15 A/T fluid temperature sensor system | Probable cause |
|---|---|
| If the A/T fluid temperature sensor output is 4.5 V or higher even after driving for 10 minutes or more (fluid temperature does not rise), it is judged that there is an open circuit in the A/T fluid temperature sensor and code No. 15 is output. | • Malfunction of A/T fluid temperature sensor<br>• Malfunction of harness or connector<br>• Malfunction of engine-A/T-ECU <6G7><br>• Malfunction of A/T-ECU <4M4> |

★ Refer to the Transmission Workshop Manual.

**MUT-II Data List**
- No.15 A/T fluid temperature sensor
  **OK:** When the engine is cold, the temperature is about the same as the atmospheric temperature (air temperature).
  When the engine is hot, the temperature is 70 - 80°C.

OK → Transient malfunction (Refer to GROUP 00 - Points to Note for Transient Malfunctions.)

NG ↓

Measure at engine-A/T-ECU connector D-121 <6G7>, or at A/T-ECU connector D-107 <4M4>.
- Measure at the ECU terminals
- Ignition switch: ON
- <6G7> Voltage between terminal 81 and earth
- <4M4> Voltage between terminal 43 and earth
  **OK:** 0.5 V or less

NG → **Check the following connectors:** <6G7> D-121, <4M4> D-108
- OK → Check the trouble symptoms.
  - NG → Replace the engine-A/T-ECU or A/T-ECU.
- NG → **Repair**

OK ↓

Measure at engine-A/T-ECU connector D-122 <6G7>, or at A/T-ECU connector D-108 <4M4>.
- Measure at the ECU terminals
- Ignition switch: ON
- <6G7> Voltage between terminal 124 and earth
- <4M4> Voltage between terminal 44 and earth
  **OK:** A/T fluid temperature
  3.8 - 4.0 V at 20°C
  3.2 - 3.4 V at 40°C
  1.7 - 1.9 V at 80°C

NG → **Check the following connectors:** <6G7> D-122, <4M4> D-108
- OK → Check the trouble symptoms.
  - NG → Replace the engine-A/T-ECU or A/T-ECU.
- NG → **Revision**

OK ↓

**Check the following connectors:** <6G7> C-04, D-122, D-121,<4M4> D-108, C-04

NG → **Repair**

OK ↓

Measure at solenoid valve assembly connector C-04.
- Disconnect the connector and measure at the sensor side.
- Resistance between terminals 1 and 2
  **OK:** A/T fluid temperature
  16.7 - 20.5 kΩ at 0°C
  7.3 - 8.9 kΩ at 20°C
  3.4 - 4.2 kΩ at 40°C
  1.9 - 2.2 kΩ at 60°C
  1.0 - 1.2 kΩ at 80°C
  0.57 - 0.69 kΩ at 100°C

NG → Replace the A/T fluid temperature sensor. ★

OK ↓

To the next page

Purchased from www.WorkshopManuals.co.uk

www.WorkshopManuals.co.uk

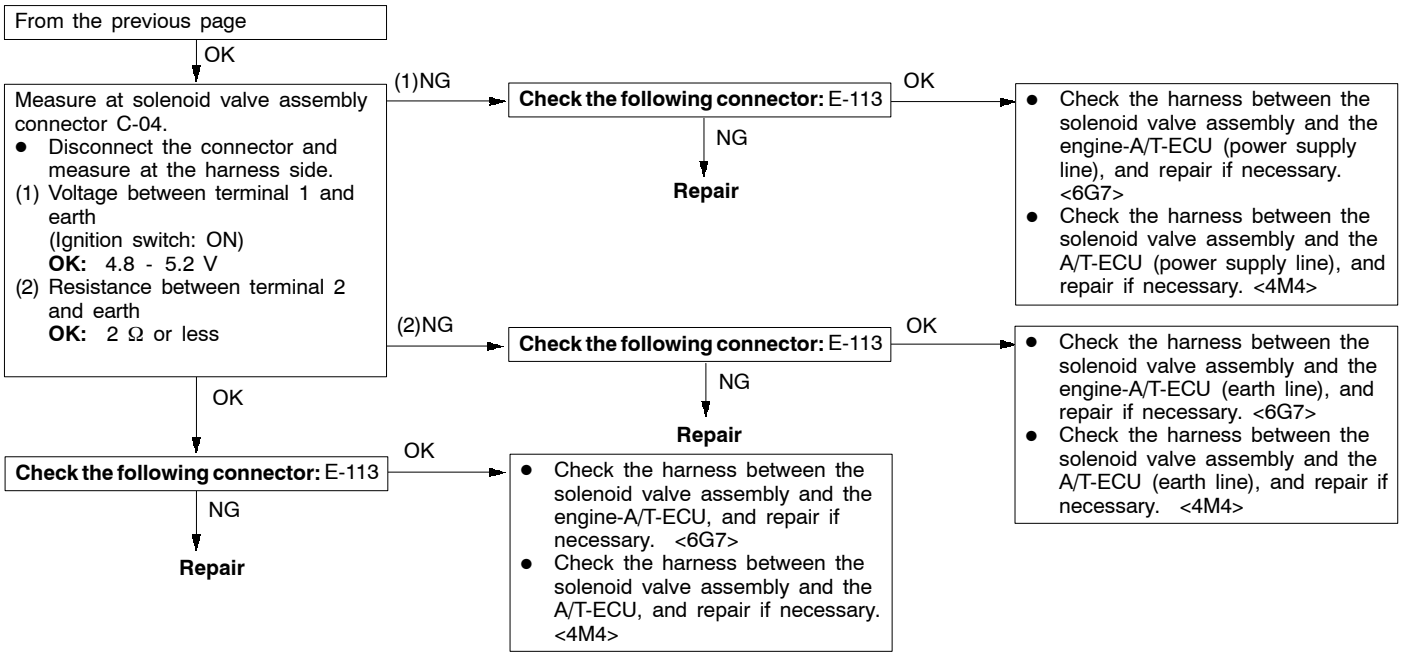


| Code No. 21 Crank angle sensor <6G7> or engine speed sensor <4M4> system | Probable cause |
|---|---|
| If no output pulse from the crank angle sensor or engine speed sensor is detected for 5 seconds or more when the vehicle speed is 25 km/h or more, it is judged that there is an open circuit in the crank angle sensor or an open circuit in the engine speed sensor, and code No. 21 is output. | ● Malfunction of crankshaft sensing blade <6G7><br>● Malfunction of crank angle sensor <6G7><br>● Malfunction of engine speed sensor <4M4><br>● Malfunction of harness or connector<br>● Malfunction of engine-A/T-ECU <6G7><br>● Malfunction of A/T-ECU <4M4> |

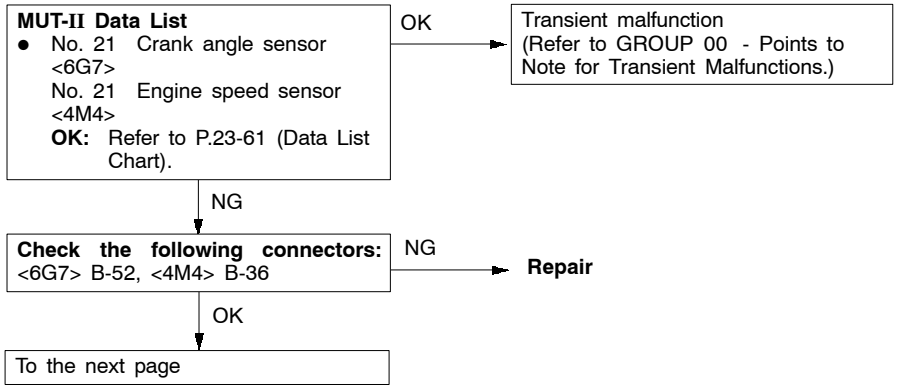


Purchased from www.WorkshopManuals.co.uk

www.WorkshopManuals.co.uk

From the previous page

OK

Measure at crank angle sensor connector B-52 <6G7>, or at injection pump assembly connector B-36 <4M4>.
- Disconnect the connector and measure at the harness side.

(1) <6G7> Resistance between terminal 1 and earth
<4M4> Resistance between terminal 4 and earth
**OK:** 2 Ω or less

(2) Voltage between terminal 2 and earth
(Ignition switch: ON)
**OK:** 4.8 - 5.2 V

(3) Voltage between terminal 3 and earth
(Ignition switch: ON)
**OK:** System voltage

(1)NG → **Check the following connectors:** <6G7> B-52, <4M4> B-36
- OK → Check the harness between the crank angle sensor and body earth, and repair if necessary. <6G7>
  - Check the harness between the injection pump assembly and body earth, and repair if necessary. <4M4>
- NG → **Repair**

(2)NG → Measure at engine-A/T-ECU connector D-120 <6G7>, or at A/T-ECU connector D-107 <4M4>.
- Measure at the ECU terminals
- Disconnect connector B-52 <6G7>, or connector B-36 <4M4>.
- Ignition switch: ON
- <6G7> Voltage between terminal 45 and earth
- <4M4> Voltage between terminals 33 and earth
  **OK:** 4.8 - 5.2 V

- OK → **Check the following connectors:** <6G7> D-120,<4M4> D-113, D-108
  - OK → Check the harness between the crank angle sensor and the engine-A/T-ECU, and repair if necessary. <6G7>
    - Check the harness between the injection pump assembly and the A/T-ECU, and repair if necessary. <4M4>
  - NG → **Repair**
- NG → **Check the following connectors:** <6G7> D-120, <4M4> D-113, D-108
  - NG → **Repair**
  - OK → Check the harness between the crank angle sensor and the engine-A/T-ECU. <6G7>
    - Check the harness between the injection pump assembly and the A/T-ECU. <4M4>
    - OK → Check the trouble symptoms.
      - NG → Replace the engine-A/T-ECU or A/T-ECU.
    - NG → **Repair**

(3)NG → **Check the following connector:** B-25X
- OK → Check the harness between the crank angle sensor and the engine control relay, and repair if necessary. <6G7>
  - Check the harness between the injection pump assembly and the engine control relay, and repair if necessary. <4M4>
- NG → **Repair**

OK

Measure the output wave pattern at crank angle sensor connector B-52 <6G7>, or at injection pump assembly connector B-36 <4M4> (using an oscilloscope).
- Use the test harness (MD998478) to connect the terminals, and then measure at the pickup harness.
- Engine: Idling
- Selector lever position: P
- Voltage between terminal 2 and earth
  **OK:** A wave pattern such as the one shown on P.23-69 (Check Procedure Using an Oscilloscope) should be output, and the maximum value should be 4.8 V or more and the minimum value should be 0.6 V or less. There should be no noise in the output wave pattern.

- NG → **Check the following connectors:** <6G7> B-52, D-120, B-25X <4M4> D-108, D-113, B-36, B-25X
  - NG → **Repair**
  - OK → Check the harness between the crank angle sensor and the engine-A/T-ECU, and repair if necessary. <6G7>
    - Check the harness between the engine speed sensor and the A/T-ECU, and repair if necessary. <4M4>
    - Check the harness between the crank angle sensor and the engine control relay, and repair if necessary. <6G7>
    - Check the harness between the engine speed sensor and the engine control relay, and repair if necessary. <4M4>
    - Check the harness between the crank angle sensor and body earth, and repair if necessary. <6G7>
    - Check the harness between the engine speed sensor and body earth, and repair if necessary. <4M4>
    - NG → **Repair**
    - OK → Check the trouble symptoms.
      - NG → Replace the crank angle sensor <6G7> or the engine speed sensor <4M4>.
      - Replace the crankshaft sensing blade. <6G7>
- OK → Check the trouble symptoms.
  - NG → Replace the engine-A/T-ECU or A/T-ECU.

Purchased from www.WorkshopManuals.co.uk

www.WorkshopManuals.co.uk

| Code No. 22 Input shaft speed sensor system | Probable cause |
|---|---|
| If no output pulse from the input shaft speed sensor is detected for 1 second or more while the vehicle is driving at 30 km/h or more in 4th, it is judged that there is a short-circuit or open circuit in the input shaft speed sensor, and code No. 22 is output.<br>If code No. 22 is output 4 times, the transmission is locked at 3rd gear (D) or 2nd gear (downshift operation in Sports mode) as a fail-safe measure, and the N range indicator lamp flashes at 1 Hz. | • Malfunction of input shaft speed sensor<br>• Malfunction of reverse clutch retainer<br>• Malfunction of harness or connector<br>• Malfunction of engine-A/T-ECU <6G7><br>• Malfunction of A/T-ECU <4M4> |

★ Refer to the Transmission Workshop Manual.

**MUT-II Data List**
- No. 22 Input shaft speed sensor
  **OK:** Refer to P.23-61 (Data List Chart).

OK → Transient malfunction (Refer to GROUP 00 - Points to Note for Transient Malfunctions.)

NG ↓

Measure at engine-A/T-ECU connector D-121 <6G7>, or at A/T-ECU connector D-107 <4M4>.
- Measure at the ECU terminals
- Ignition switch: ON
- <6G7> Voltage between terminal 81 and earth
- <4M4> Voltage between terminal 43 and earth
  **OK:** 0.5 V or less

NG → **Check the following connectors:** <6G7> D-121, <4M4> D-108 → NG → **Repair**

OK ↓ Check the trouble symptoms. → NG → Replace the engine-A/T-ECU or A/T-ECU.

OK ↓

Measure at engine-A/T-ECU connector D-122 <6G7>, or at A/T-ECU connector D-108 <4M4>.
- Measure at the ECU terminals
- Disconnect C-23
- Ignition switch: ON
- <6G7> Voltage between terminal 103 and earth
- <4M4> Voltage between terminal 31 and earth
  **OK:** 4.8 - 5.2 V

NG → **Check the following connectors:** <6G7> D-122, <4M4> D-108 → NG → **Repair**

OK ↓ Check the trouble symptoms. → NG → Replace the engine-A/T-ECU or A/T-ECU.

OK ↓

Measure the output wave pattern of the input shaft speed sensor at engine-A/T-ECU connectors D-121 and D-122 <6G7>, or at A/T-ECU connector D-108 <4M4> (using an oscilloscope).
- Vehicle speed: approx. 50 km/h
- Shift range: 4th
- <6G7> Voltage between terminal 81 of D-121 and terminal 103 of D-122
- <4M4> Voltage between terminal 31 of D-108 and terminal 43 of D-108
  **OK:** A wave pattern such as the one shown on P.23-69 (Check Procedure Using an Oscilloscope) should be output, and the maximum value should be 4.8 V or more and the minimum value should be 0.8 V or less. There should be no noise in the output wave pattern.

NG → **Check the following connectors:** <6G7> D-121, D-122, <4M4> D-108 → NG → **Repair**

OK ↓ Check the trouble symptoms. → NG → Replace the engine-A/T-ECU or A/T-ECU.

OK ↓

To the next page

Purchased from www.WorkshopManuals.co.uk

www.WorkshopManuals.co.uk

From the previous page

OK

**Check the following connectors:** <6G7> D-121, D-122, C-23, <4M4> D-108, C-23

NG → **Repair**

OK

Measure at input shaft speed sensor connector C-23.
- Disconnect the connector and measure at the harness side.

(1) Resistance between terminal 1 and earth
**OK:** 2 Ω or less
(2) Voltage between terminal 2 and earth
(Ignition switch: ON)
**OK:** 4.8 - 5.2 V
(3) Voltage between terminal 3 and earth
(Ignition switch: ON)
**OK:** System voltage

(1)NG → **Check the following connector:** E-113

NG → **Repair**

OK →
- Check the harness between the input shaft speed sensor and the engine-A/T-ECU (earth line), and repair if necessary. <6G7>
- Check the harness between the input shaft speed sensor and the A/T-ECU (earth line), and repair if necessary.<4M4>

(2)NG → **Check the following connector:** E-113

NG → **Repair**

OK →
- Check the harness between the input shaft speed sensor and the engine-A/T-ECU (sensor line), and repair if necessary. <6G7>
- Check the harness between the input shaft speed sensor and the A/T-ECU (sensor line), and repair if necessary.<4M4>

(3)NG → **Check the following connectors:** D-208, D-213, D-32, E-115

NG → **Repair**

OK → Check the harness between the input shaft speed sensor and the ignition switch, and repair if necessary.

OK

Replace the input shaft speed sensor. ★

Check the trouble symptoms.

NG

**Check the following connectors:** D-208, D-213, D-32, E-115, E-113

NG → **Repair**

OK

- Check the harness between the input shaft speed sensor and the engine-A/T-ECU (earth line). <6G7>
- Check the harness between the input shaft speed sensor and the A/T-ECU (earth line). <4M4>
- Check the harness between the input shaft speed sensor and the ignition switch.

NG → **Repair**

OK

Check the trouble symptoms.

NG

Overhaul the A/T. ★
- Replace the reverse clutch retainer.

→ Check the trouble symptoms.

OK → Eliminate the cause of the noise.

Purchased from www.WorkshopManuals.co.uk

www.WorkshopManuals.co.uk

| Code No. 23 Output shaft speed sensor system | Probable cause |
|---|---|
| If the output from the output shaft speed sensor is 50% or less continuously for 1 second or more while the vehicle is driving at 30 km/h or more in 4th, it is judged that there is a short-circuit or open circuit in the output shaft speed sensor, and code No. 23 is output.<br>If code No. 23 is output 4 times, the transmission is locked at 3rd gear (D) or 2nd gear (downshift operation in Sports mode) as a fail-safe measure, and the N range indicator lamp flashes at 1 Hz. | • Malfunction of output shaft speed sensor<br>• Malfunction of direct planetary carrier<br>• Malfunction of harness or connector<br>• Malfunction of engine-A/T-ECU <6G7><br>• Malfunction of A/T-ECU <4M4> |

★ Refer to the Transmission Workshop Manual.

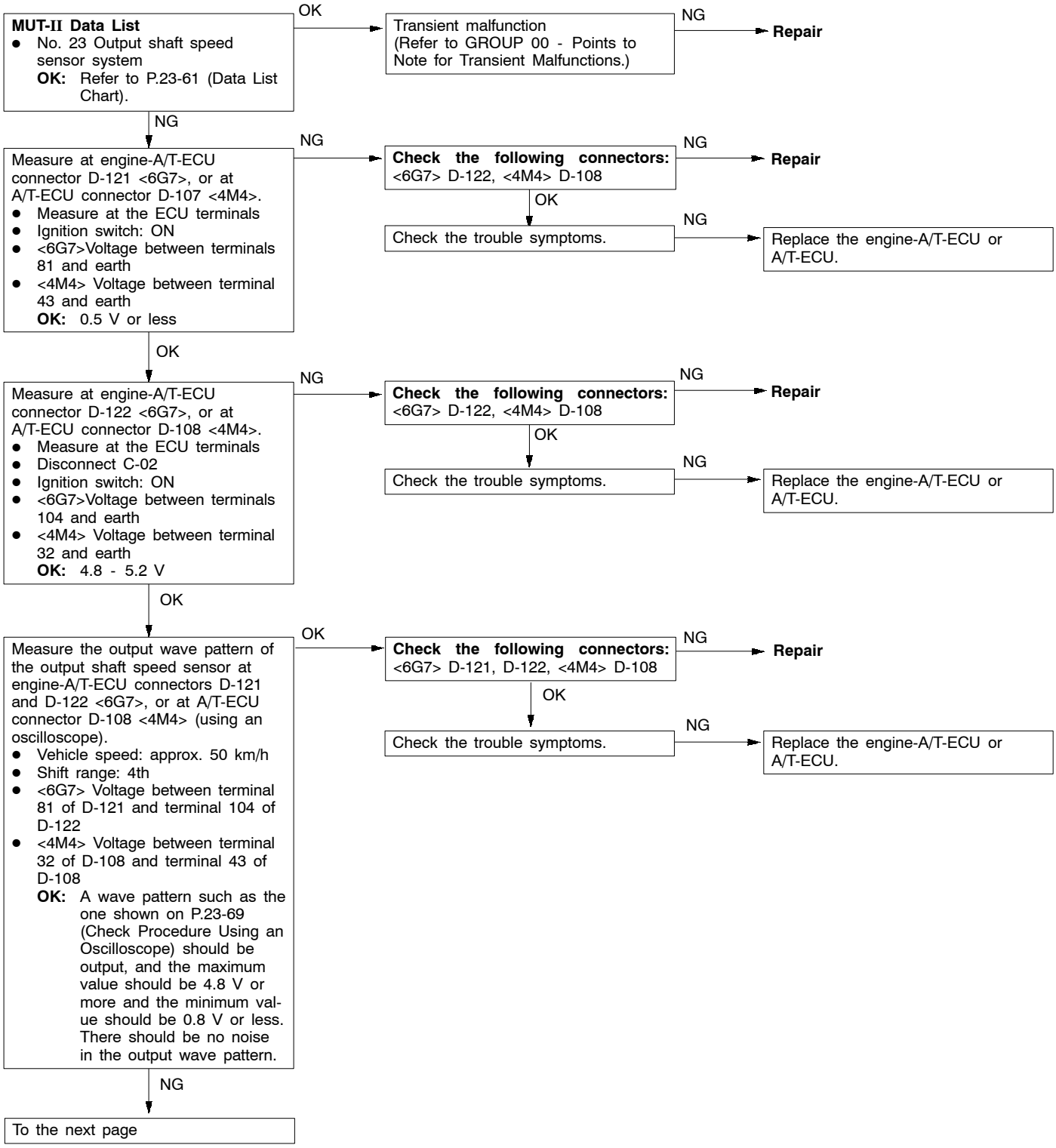


Purchased from www.WorkshopManuals.co.uk

www.WorkshopManuals.co.uk

From the previous page

NG

**Check the following connectors:** <6G7> D-121, D-122, C-24, <4M4> D-108, C-24

NG → **Repair**

OK

Measure at output shaft speed sensor connector C-23.
- Disconnect the connector and measure at the harness side.

(1) Resistance between terminal 1 and earth
**OK:** 2 Ω or less
(2) Voltage between terminal 2 and earth
(Ignition switch: ON)
**OK:** 4.8 - 5.2 V
(3) Voltage between terminal 3 and earth
(Ignition switch: ON)
**OK:** System voltage

(1)NG → **Check the following connector:** E-113

OK →
- Check the harness between the output shaft speed sensor and the engine-A/T-ECU (earth line), and repair if necessary. <6G7>
- Check the harness between the output shaft speed sensor and the A/T-ECU (earth line), and repair if necessary. <4M4>

NG → **Repair**

(2)NG → **Check the following connector:** E-113

OK →
- Check the harness between the output shaft speed sensor and the engine-A/T-ECU (earth line), and repair if necessary. <6G7>
- Check the harness between the output shaft speed sensor and the A/T-ECU (sensor line), and repair if necessary. <4M4>

NG → **Repair**

(3)NG → **Check the following connectors:** D-208, D-213, D-32, E-115

OK → Check the harness between the output shaft speed sensor and the ignition switch, and repair if necessary.

NG → **Repair**

OK

Replace the output shaft speed sensor. ★

Check the trouble symptoms.

NG

**Check the following connectors:** D-208, D-213, D-32, E-115, E-113

NG → **Repair**

OK

- Check the harness between the output shaft speed sensor and the engine-A/T-ECU. <6G7>
- Check the harness between the output shaft speed sensor and the A/T-ECU. <4M4>
- Check the harness between the output shaft speed sensor and the ignition switch.

NG → **Repair**

OK

Check the trouble symptoms.

NG

Overhaul the A/T.
- Replace the direct planetary carrier.

→ Check the trouble symptoms.

NG → Eliminate the cause of the noise.

Purchased from www.WorkshopManuals.co.uk

www.WorkshopManuals.co.uk

| Code No.25 Wide open throttle switch system | Probable cause |
|---|---|
| If the wide open throttle switch does not turn OFF when the accelerator pedal is not depressed, there is a short circuit in the wide open throttle switch and diagnosis code No. 25 is output. | • Malfunction of wide open throttle switch<br>• Malfunction of harness and connectors<br>• Malfunction of engine-A/T-ECU <6G7><br>• Malfunction of A/T-ECU <4M4> |

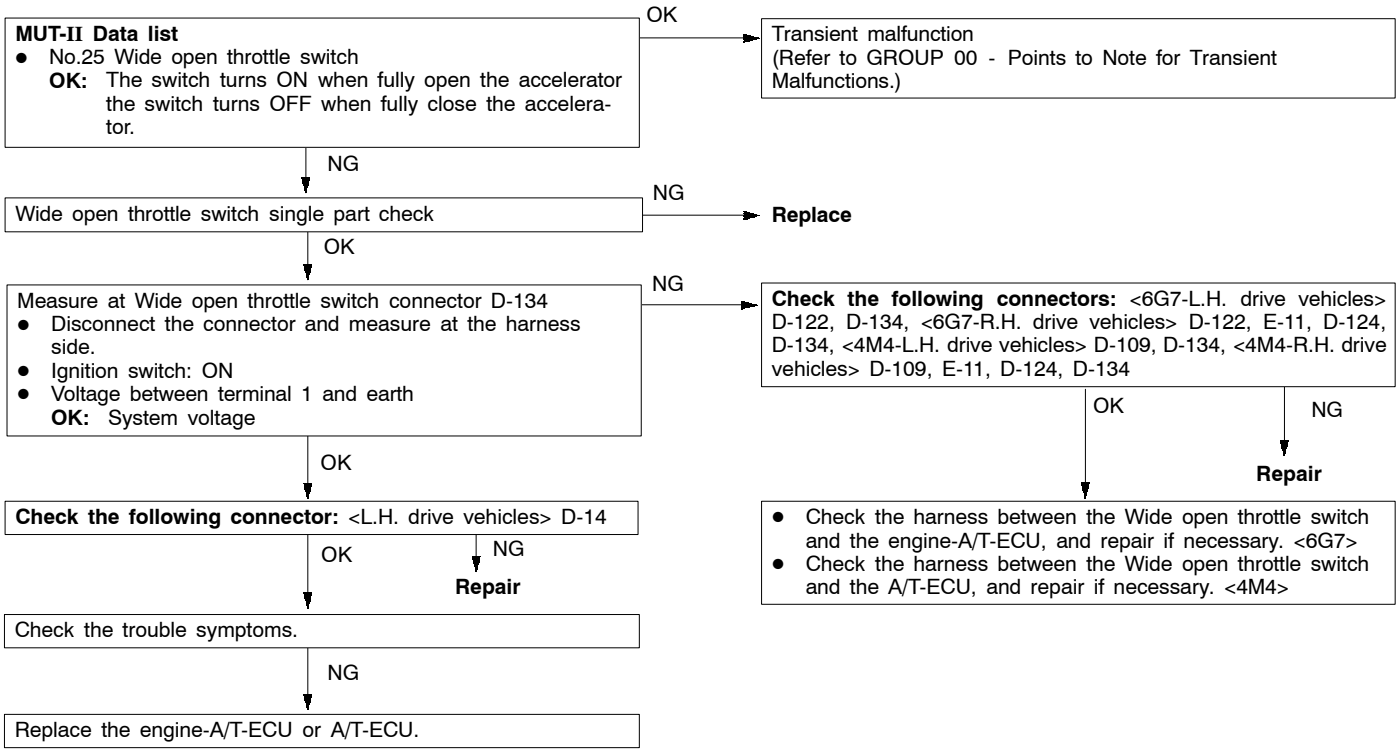


Purchased from www.WorkshopManuals.co.uk

www.WorkshopManuals.co.uk

| Code No. 26 Stop lamp switch system | Probable cause |
|---|---|
| If the stop lamp switch is continuously on for 5 minutes or more while the vehicle is being driven, it is judged that there is a short-circuit in the stop lamp switch and code No. 26 is output. | • Malfunction of brake pedal<br>• Malfunction of stop lamp switch<br>• Malfunction of harness or connector<br>• Malfunction of engine-A/T-ECU <6G7><br>• Malfunction of A/T-ECU <4M4> |

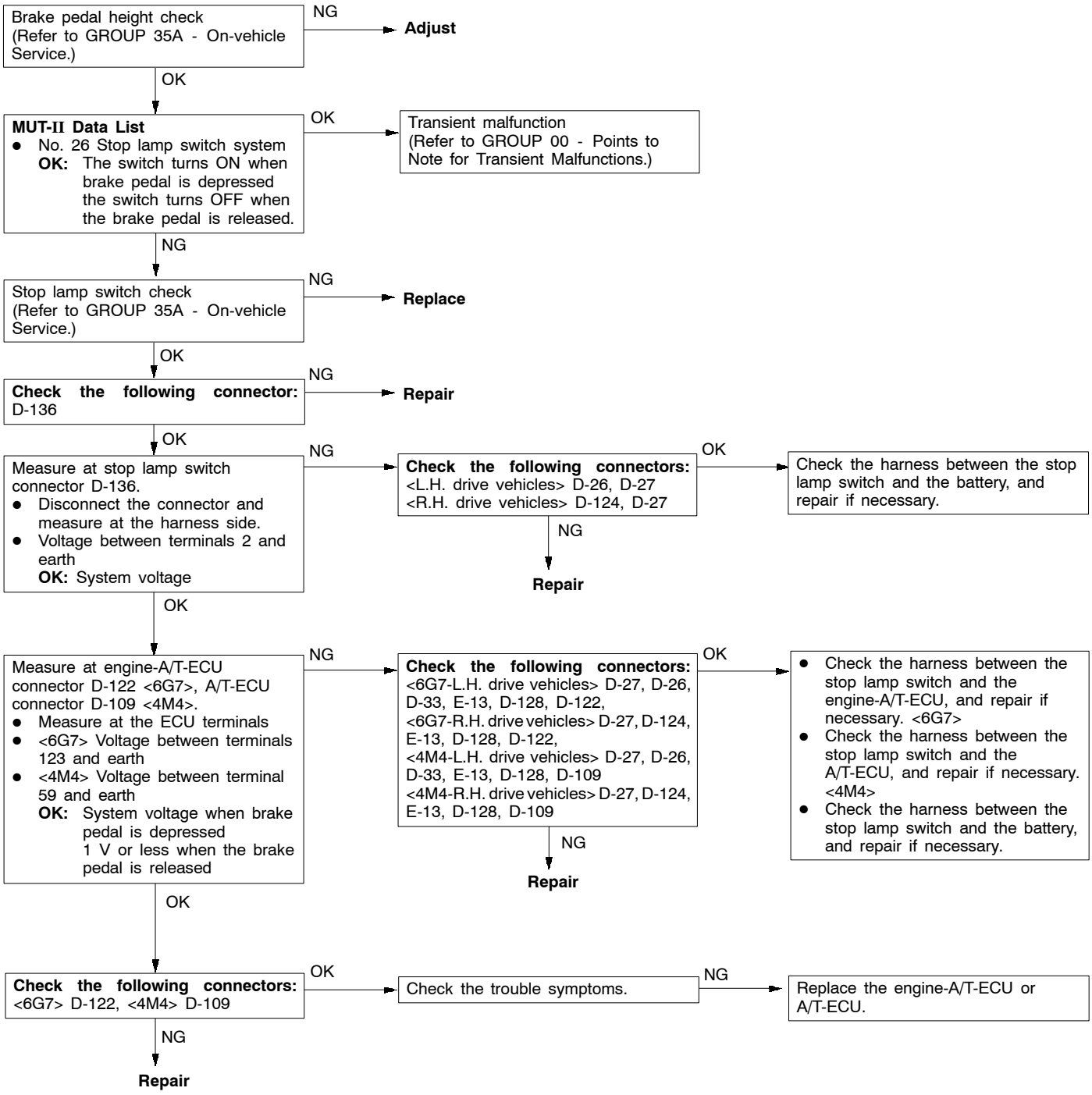


Purchased from www.WorkshopManuals.co.uk

www.WorkshopManuals.co.uk

| Code No. 31 LR solenoid valve system | Probable cause |
|---|---|
| If the drive terminal voltage of the LR solenoid valve is 3.0 V or less, it is judged that there is a short-circuit or open circuit in the LR solenoid valve, and the corresponding code is output.<br>The transmission will be fixed in 3rd as a fail-safe measure, and the N range indicator will flash at a rate of 1 Hz. | • Malfunction of LR solenoid valve<br>• Malfunction of harness or connector<br>• Malfunction of engine-A/T-ECU <6G7><br>• Malfunction of A/T-ECU <4M4> |

★ Refer to the Transmission Workshop Manual.

**MUT-II Self-Diag Code**
- Is code No. 54 output?

YES → Code No. 54 - A/T control relay system check (Refer to P.23-103.)

NO ↓

**MUT-II Actuator Test**
- No. 1 LR solenoid valve
  **OK:** Sound of operation can be heard

OK → Transient malfunction (Refer to GROUP 00 - Points to Note for Transient Malfunctions.)

NG ↓

Measure at engine-A/T-ECU connector D-122 <6G7>, or at A/T-ECU connector D-109 <4M4>.
- Measure at the ECU terminals
- Ignition switch: ON
- <6G7> Voltage between terminal 129 and earth
- <4M4> Voltage between terminal 62 and earth
  **OK:** System voltage

NG → **Check the following connectors:** <6G7> D-122, <4M4> D-109
- OK → Check the trouble symptoms.
  - NG → Replace the engine-A/T-ECU or A/T-ECU.
- NG → **Repair**

OK ↓

**Check the following connector:** C-04

NG → **Repair**

OK ↓

Measure at solenoid valve assembly connector C-04.
- Disconnect the connector and measure at the solenoid valve side.
- Resistance between terminals 6 and 10
  **OK:** 2.7 - 3.4 Ω

NG → Replace the LR solenoid valve ★

OK ↓

Measure at solenoid valve assembly connector C-04.
- Disconnect the connector and measure at the harness side.
- Ignition switch: ON
- Voltage between terminal 10 and earth
  **OK:** System voltage

NG → **Check the following connectors:** E-113, D-12
- OK → Check the harness between the solenoid valve assembly and the A/T control relay, and repair if necessary.
- NG → **Repair**

OK ↓

**Check the following connectors:** <6G7> D-122, E-113, D-12 <4M4> D-109, E-113, D-12

NG → **Repair**

OK ↓

- Check the harness between the solenoid valve assembly and the engine-A/T-ECU, and repair if necessary. <6G7>
- Check the harness between the solenoid valve assembly and the A/T-ECU, and repair if necessary. <4M4>
- Check the harness between the solenoid valve assembly and the A/T control relay, and repair if necessary.

Purchased from www.WorkshopManuals.co.uk

www.WorkshopManuals.co.uk

| Code No. 32 UD solenoid valve system | Probable cause |
|---|---|
| If the drive terminal voltage of the UD solenoid valve is 3.0 V or less, it is judged that there is a short-circuit or open circuit in the UD solenoid valve, and the corresponding code is output.<br>The transmission will be fixed in 3rd as a fail-safe measure, and the N range indicator will flash at a rate of 1 Hz. | • Malfunction of UD solenoid valve<br>• Malfunction of harness or connector<br>• Malfunction of engine-A/T-ECU <6G7><br>• Malfunction of A/T-ECU <4M4> |

★ Refer to the Transmission Workshop Manual.

**MUT-II Self-Diag Code**
- Is code No. 54 output?

YES → Code No. 54 - A/T control relay system check (Refer to P.23-103.)

NO ↓

**MUT-II Actuator Test**
- No.2 UD solenoid valve
  **OK:** Sound of operation can be heard

OK → Transient malfunction (Refer to GROUP 00 - Points to Note for Transient Malfunctions.)

NG ↓

Measure at engine-A/T-ECU connector D-122 <6G7>, or at A/T-ECU connector D-107 <4M4>.
- Measure at the ECU terminals
- Ignition switch: ON
- <6G7> Voltage between terminal 120 and earth
- <4M4> Voltage between terminal 1 and earth
  **OK:** System voltage

NG → **Check the following connectors:** <6G7> D-122, <4M4> D-107
- OK → Check the trouble symptoms.
  - NG → Replace the engine-A/T-ECU or A/T-ECU.
- NG → **Repair**

OK ↓

**Check the following connector:** C-04

NG → **Repair**

OK ↓

Measure at solenoid valve assembly connector C-04.
- Disconnect the connector and measure at the solenoid valve side.
- Resistance between terminals 3 and 9
  **OK:** 2.7 - 3.4 Ω

NG → Replace the UD solenoid valve. ★

OK ↓

Measure at solenoid valve assembly connector C-04.
- Disconnect the connector and measure at the harness side.
- Ignition switch: ON
- Voltage between terminals 9 and earth
  **OK:** System voltage

NG → **Check the following connectors:** E-113, D-12
- OK → Check the harness between the solenoid valve assembly and the A/T control relay, and repair if necessary.
- NG → **Repair**

OK ↓

**Check the following connectors:** <6G7> D-122, E-113, D-12, <4M4> D-107, E-113, D-12

NG → **Repair**

OK ↓

- Check the harness between the solenoid valve assembly and the engine-A/T-ECU, and repair if necessary. <6G7>
- Check the harness between the solenoid valve assembly and the A/T-ECU, and repair if necessary. <4M4>
- Check the harness between the solenoid valve assembly and the A/T control relay, and repair if necessary.

Purchased from www.WorkshopManuals.co.uk

www.WorkshopManuals.co.uk

| Code No. 33 2nd solenoid valve system | Probable cause |
|---|---|
| If the drive terminal voltage of the 2nd solenoid valve is 3.0 V or less, it is judged that there is a short-circuit or open circuit in the 2nd solenoid valve, and the corresponding code is output.<br>The transmission will be fixed in 3rd as a fail-safe measure, and the N range indicator will flash at a rate of 1 Hz. | • Malfunction of 2nd solenoid valve<br>• Malfunction of harness or connector<br>• Malfunction of engine-A/T-ECU <6G7><br>• Malfunction of A/T-ECU <4M4> |

★ Refer to the Transmission Workshop Manual.

**MUT-II Self-Diag Code**
- Is code No. 54 output?

YES → Code No. 54 - A/T control relay system check (Refer to P.23-103.)

NO ↓

**MUT-II Actuator Test**
- No. 3 2nd solenoid valve
  **OK:** Sound of operation can be heard

OK → Transient malfunction (Refer to GROUP 00 - Points to Note for Transient Malfunctions.)

NG ↓

Measure at engine-A/T-ECU connector D-122 <6G7>, or at A/T-ECU connector D-107 <4M4>.
- Measure at the ECU terminals
- Ignition switch: ON
- <6G7> Voltage between terminal 106 and earth
- <4M4> Voltage between terminal 16 and earth
  **OK:** System voltage

NG → **Check the following connectors:** <6G7> D-122, <4M4> D-107
- OK → Check the trouble symptoms.
  - NG → Replace the engine-A/T-ECU or A/T-ECU.
- NG → **Repair**

OK ↓

**Check the following connector:** C-04

NG → **Repair**

OK ↓

Measure at solenoid valve assembly connector C-04.
- Disconnect the connector and measure at the solenoid valve side.
- Resistance between terminals 4 and 9
  **OK:** 2.7 - 3.4 Ω

NG → Replace the 2nd solenoid valve. ★

OK ↓

Measure at solenoid valve assembly connector C-04.
- Disconnect the connector and measure at the harness side.
- Ignition switch: ON
- Voltage between terminals 9 and earth
  **OK:** System voltage

NG → **Check the following connectors:** E-113, D-12
- OK → Check the harness between the solenoid valve assembly and the A/T control relay, and repair if necessary.
- NG → **Repair**

OK ↓

**Check the following connectors:** <6G7> D-122, E-113, D-12, <4M4> D-107, E-113, D-12

NG → **Repair**

OK ↓

- Check the harness between the solenoid valve assembly and the engine-A/T-ECU, and repair if necessary. <6G7>
- Check the harness between the solenoid valve assembly and the A/T-ECU, and repair if necessary. <4M4>
- Check the harness between the solenoid valve assembly and the A/T control relay, and repair if necessary.

Purchased from www.WorkshopManuals.co.uk

www.WorkshopManuals.co.uk

| Code No. 34 OD solenoid valve system | Probable cause |
|---|---|
| If the drive terminal voltage of the OD solenoid valve is 3.0 V or less, it is judged that there is a short-circuit or open circuit in the OD solenoid valve, and the corresponding code is output.<br>The transmission will be fixed in 3rd as a fail-safe measure, and the N range indicator will flash at a rate of 1 Hz. | • Malfunction of OD solenoid valve<br>• Malfunction of harness or connector<br>• Malfunction of engine-A/T-ECU <6G7><br>• Malfunction of A/T-ECU <4M4> |

★ Refer to the Transmission Workshop Manual.

**MUT-II Self-Diag Code**
- Is code No. 54 output?

YES → Code No. 54 - A/T control relay system check (Refer to P.23-103.)

NO ↓

**MUT-II Actuator Test**
- No.4 OD solenoid valve
  **OK:** Sound of operation can be heard

OK → Transient malfunction (Refer to GROUP 00 - Points to Note for Transient Malfunctions.)

NG ↓

Measure at engine-A/T-ECU connector D-122 <6G7>, or at A/T-ECU connector D-107 <4M4>.
- Measure at the ECU terminals
- Ignition switch: ON
- <6G7> Voltage between terminal 130 and earth
- <4M4> Voltage between terminal 14 and earth
  **OK:** System voltage

NG → **Check the following connectors:** <6G7> D-122, <4M4> D-107
- OK → Check the trouble symptoms.
  - NG → Replace the engine-A/T-ECU or A/T-ECU.
- NG → **Repair**

OK ↓

**Check the following connector:** C-04

NG → **Repair**

OK ↓

Measure at solenoid valve assembly connector C-04.
- Disconnect the connector and measure at the solenoid valve side.
- Resistance between terminals 5 and 9
  **OK:** 2.7 - 3.4 Ω

NG → Replace the OD solenoid valve. ★

OK ↓

Measure at solenoid valve assembly connector C-04.
- Disconnect the connector and measure at the harness side.
- Ignition switch: ON
- Voltage between terminals 9 and earth
  **OK:** System voltage

NG → **Check the following connectors:** E-113, D-12
- OK → Check the harness between the solenoid valve assembly and the A/T control relay, and repair if necessary.
- NG → **Repair**

OK ↓

**Check the following connectors:** <6G7> D-122, E-113, D-12, <4M4> D-107, E-113, D-12

NG → **Repair**

OK ↓

- Check the harness between the solenoid valve assembly and the engine-A/T-ECU, and repair if necessary. <6G7>
- Check the harness between the solenoid valve assembly and the A/T-ECU, and repair if necessary. <4M4>
- Check the harness between the solenoid valve assembly and the A/T control relay, and repair if necessary.

Purchased from www.WorkshopManuals.co.uk

www.WorkshopManuals.co.uk

| Code No. 35 RED solenoid valve system | Probable cause |
|---|---|
| If the drive terminal voltage of the RED solenoid valve is 3.0 V or less, it is judged that there is a short-circuit or open circuit in the RED solenoid valve, and the corresponding code is output.<br>The transmission will be fixed in 3rd as a fail-safe measure, and the N range indicator will flash at a rate of 1 Hz. | • Malfunction of RED solenoid valve<br>• Malfunction of harness or connector<br>• Malfunction of engine-A/T-ECU <6G7><br>• Malfunction of A/T-ECU <4M4> |

★ Refer to the Transmission Workshop Manual.

**MUT-II Self-Diag Code**
- Is code No. 54 output?

YES → Code No. 54 - A/T control relay system check (Refer to P.23-103.)

NO ↓

**MUT-II Actuator Test**
- No.5 RED solenoid valve
  **OK:** Sound of operation can be heard

OK → Transient malfunction (Refer to GROUP 00 - Points to Note for Transient Malfunctions.)

NG ↓

Measure at engine-A/T-ECU connector D-122 <6G7>, or at A/T-ECU connector D-109 <4M4>.
- Measure at the ECU terminals
- Ignition switch: ON
- <6G7> Voltage between terminal 119 and earth
- <4M4> Voltage between terminal 51 and earth
  **OK:** System voltage

NG → **Check the following connectors:** <6G7> D-122, <4M4> D-109
- OK → Check the trouble symptoms.
  - NG → Replace the engine-A/T-ECU or A/T-ECU.
- NG → **Repair**

OK ↓

**Check the following connector:** C-04

NG → **Repair**

OK ↓

Measure at solenoid valve assembly connector C-04.
- Disconnect the connector and measure at the solenoid valve side.
- Resistance between terminals 8 and 10
  **OK:** 2.7 - 3.4 Ω

NG → Replace the RED solenoid valve.★

OK ↓

Measure at solenoid valve assembly connector C-04.
- Disconnect the connector and measure at the harness side.
- Ignition switch: ON
- Voltage between terminal 10 and earth
  **OK:** System voltage

NG → **Check the following connectors:** E-113, D-12
- OK → Check the harness between the solenoid valve assembly and the A/T control relay, and repair if necessary.
- NG → **Repair**

OK ↓

**Check the following connectors:** <6G7> D-122, E-113, D-12, <4M4> D-109, E-113, D-12

NG → **Repair**

OK ↓

- Check the harness between the solenoid valve assembly and the engine-A/T-ECU, and repair if necessary. <6G7>
- Check the harness between the solenoid valve assembly and the A/T-ECU, and repair if necessary. <4M4>
- Check the harness between the solenoid valve assembly and the A/T control relay, and repair if necessary.

Purchased from www.WorkshopManuals.co.uk

www.WorkshopManuals.co.uk

| Code No. 36 DCC solenoid valve system | Probable cause |
|---|---|
| If the drive terminal voltage of the DCC solenoid valve is 3.0 V or less, it is judged that there is a short-circuit or open circuit in the DCC solenoid valve, and code No. 36 is output.<br>The transmission will be fixed in 3rd as a fail-safe measure, and the N range indicator will flash at a rate of 1 Hz. | • Malfunction of DCC solenoid valve<br>• Malfunction of harness or connector<br>• Malfunction of engine-A/T-ECU <6G7><br>• Malfunction of A/T-ECU <4M4> |

★ Refer to the Transmission Workshop Manual.

**MUT-II Self-Diag Code**
- Is code No. 54 output?

YES → Code No. 54 - A/T control relay system check (Refer to P.23-103.)

NO ↓

**MUT-II Actuator Test**
- No. 6 DCC solenoid valve
  **OK:** Sound of operation can be heard

OK → Transient malfunction (Refer to GROUP 00 - Points to Note for Transient Malfunctions.)

NG ↓

Measure at engine-A/T-ECU connector D-122 <6G7>, or at A/T-ECU connector D-107 <4M4>.
- Measure at the ECU terminals.
- Ignition switch: ON
- <6G7> Voltage between terminal 107 and earth
- <4M4> Voltage between terminal 15 and earth
  **OK:** System voltage

NG → **Check the following connectors:** <6G7> D-122, <4M4> D-107
- OK → Check the trouble symptoms.
  - NG → Replace the engine-A/T-ECU or A/T-ECU.
- NG → **Repair**

OK ↓

**Check the following connector:** C-04

NG → **Repair**

OK ↓

Measure at solenoid valve assembly connector C-04.
- Disconnect the connector and measure at the solenoid valve side.
- <4M4> Resistance between terminal 7 and 10
  **OK:** 2.7 - 3.4 Ω

NG → Replace the DCC solenoid valve. ★

OK ↓

Measure at solenoid valve assembly connector C-04.
- Disconnect the connector and measure at the harness side.
- Ignition switch: ON
- Voltage between terminal 10 and earth
  **OK:** System voltage

NG → **Check the following connectors:** E-113, D-12
- OK → Check the harness between the solenoid valve assembly and the A/T control relay, and repair if necessary.
- NG → **Repair**

OK ↓

**Check the following connectors:** <6G7> D-122, E-113, D-12, <4M4> D-107, E-113, D-12

NG → **Repair**

OK ↓

- Check the harness between the solenoid valve assembly and the engine-A/T-ECU, and repair if necessary. <6G7>
- Check the harness between the solenoid valve assembly and the A/T-ECU, and repair if necessary. <4M4>
- Check the harness between the solenoid valve assembly and the A/T control relay, and repair if necessary.

Purchased from www.WorkshopManuals.co.uk

www.WorkshopManuals.co.uk

| Code No.41 1st without completion of shifting | Probable cause |
|---|---|
| If the output shaft speed sensor output multiplied by the 1st gear ratio is not identical to the input shaft speed sensor output after shifting to 1st, code No. 41 is output.<br>If code No. 41 is output 4 times, the transmission is fixed in 3rd and the N range lamp flashes at a rate of 1 Hz. | ● Malfunction of input shaft speed sensor<br>● Malfunction of output shaft speed sensor<br>● Malfunction of harness or connector<br>● Malfunction of solenoid valve<br>● Malfunction of reverse clutch retainer<br>● Malfunction of direct planetary carrier<br>● Malfunction of LR brake system<br>● Malfunction of UD clutch system<br>● Malfunction of RED brake system<br>● Malfunction of one-way clutch system<br>● Malfunction of engine-A/T-ECU <6G7><br>● Malfunction of A/T-ECU <4M4><br>● Noise is generated. |

★ Refer to the Transmission Workshop Manual.

**MUT-II Self-Diag Code**
- Is code No. 22 output?

YES → Code No. 22 Input shaft speed sensor system check (Refer to P.23-20.)

NO ↓

**MUT-II Actuator Test**
- Is code No. 23 output?

YES → Code No. 23 Input shaft speed sensor system check (Refer to P.23-22.)

NO ↓

**MUT-II Actuator Test**
- No.1 LR solenoid valve
- No.2 UD solenoid valve
- No.3 2ND solenoid valve
- No.4 OD solenoid valve
- No.5 RED solenoid valve

**OK:** The sound of operation should be heard.

NG → Replace the appropriate solenoid valve. ★

OK ↓

Measure the output wave pattern of the input shaft speed sensor at engine-A/T-ECU connectors D-121 and D-122 <6G7>, or at A/T-ECU connector D-108 <4M4> (using an oscilloscope).
- Vehicle speed: approx. 50 km/h
- Shift range: 4th

<6G7> Voltage between No.81 (D-121) and No.103 (D-122)
<4M4> Voltage between No.31 (D-108) and No.43 (D-108)
**OK:** A wave pattern such as the one shown on P.23-69 (Check Procedure Using an Oscilloscope) should be output, and the maximum value should be 4.8 V or more and the minimum value should be 0.8 V or less. There should be no noise in the output wave pattern.

NG →
- Check the harness between the input shaft speed sensor and the engine-A/T-ECU. <6G7>
- Check the harness between the input shaft speed sensor and the A/T-ECU. <4M4>

OK ↓ / NG → **Repair**

Replace the input shaft speed sensor. ★

↓

Check the trouble symptoms.

NG ↓

Overhaul the A/T. ★
- Replace the reverse clutch retainer.

↓

Check the trouble symptoms.

NG ↓

Eliminate the cause of the noise.

OK ↓

To the next page

Purchased from www.WorkshopManuals.co.uk

www.WorkshopManuals.co.uk

To the next page

OK

Measure the output wave pattern of the output shaft speed sensor at engine-A/T-ECU connectors D-121 and D-122 <6G7>, or at A/T-ECU connector D-108 <4M4> (using an oscilloscope).
- Vehicle speed: approx. 50 km/h
- Shift range: 4th
  <6G7> Voltage between No.81 (D-121) and No.104 (D-122)
  <4M4> Voltage between No.32 (D-108) and No.43 (D-108)
  **OK:** A wave pattern such as the one shown on P.23-69 (Check Procedure Using an Oscilloscope) should be output, and the maximum value should be 4.8 V or more and the minimum value should be 0.8 V or less. There should be no noise in the output wave pattern.

NG

- Check the harness between the output shaft speed sensor and the engine-A/T-ECU. <6G7>
- Check the harness between the output shaft speed sensor and the A/T-ECU. <4M4>

OK

NG

**Repair**

Replace the output shaft speed sensor. ★

Check the trouble symptoms.

NG

Overhaul the A/T. ★
- Replace the direct planetary carrier.

Check the trouble symptoms.

NG

Eliminate the cause of the noise.

OK

Replace the valve body assembly. ★

Check the trouble symptoms.

NG

Replace the engine-A/T-ECU or A/T-ECU.

Check the trouble symptoms.

NG

Overhaul the A/T. ★
- Replace the UD clutch. (Code No. 42, 43 or No. 44 is output, or no other codes are output.)
- Replace the LR brake. (Code No. 46 is output, or no other codes are output.)
- Replace the RED brake. (Code No. 42, 43 or No. 46 is output, or no other codes are output.)
- Replace the one-way clutch (OWC-L). (No other codes are output.)
- Replace the one-way clutch (OWC-D). (Code No. 42 or No. 43 is output, or no other codes are output.)

Purchased from www.WorkshopManuals.co.uk

www.WorkshopManuals.co.uk

| Code No. 42 2nd without completion of shifting | Probable cause |
|---|---|
| If the output shaft speed sensor output multiplied by the 2nd gear ratio is not identical to the input shaft speed sensor output after shifting to 2nd, code No. 42 is output.<br>If code No. 42 is output 4 times, the transmission is fixed in 3rd and the N range lamp flashes at a rate of 1 Hz. | • Malfunction of input shaft speed sensor<br>• Malfunction of output shaft speed sensor<br>• Malfunction of harness or connector<br>• Malfunction of solenoid valve<br>• Malfunction of reverse clutch retainer<br>• Malfunction of direct planetary carrier<br>• Malfunction of 2ND brake system<br>• Malfunction of UD clutch system<br>• Malfunction of RED brake system<br>• Malfunction of one-way clutch system<br>• Malfunction of engine-A/T-ECU <6G7><br>• Malfunction of A/T-ECU <4M4><br>• Noise is generated. |

★ Refer to the Transmission Workshop Manual.

**MUT-II Self-Diag Code**
- Is code No. 22 output?

YES → Code No. 22 Input shaft speed sensor system check (Refer to P.23-20.)

NO ↓

**MUT-II Actuator Test**
- Is code No. 23 output?

YES → Code No. 23 Output shaft speed sensor system check (Refer to P.23-22.)

NO ↓

**MUT-II Actuator Test**
- No.1 LR solenoid valve
- No.2 UD solenoid valve
- No.3 2ND solenoid valve
- No.4 OD solenoid valve
- No.5 RED solenoid valve

**OK:** The sound of operation should be heard.

NG → Replace the appropriate solenoid valve. ★

OK ↓

Measure the output wave pattern of the input shaft speed sensor at engine-A/T-ECU connectors D-121 and D-122 <6G7>, or at A/T-ECU connector D-108 <4M4> (using an oscilloscope).
- Vehicle speed: approx. 50 km/h
- Shift range: 4th

<6G7> Voltage between No.81 (D-121) and No.103 (D-122)
<4M4> Voltage between No.31 (D-108) and No.43 (D-108)
**OK:** A wave pattern such as the one shown on P.23-69 (Check Procedure Using an Oscilloscope) should be output, and the maximum value should be 4.8 V or more and the minimum value should be 0.8 V or less. There should be no noise in the output wave pattern.

NG →
- Check the harness between the input shaft speed sensor and the engine-A/T-ECU. <6G7>
- Check the harness between the input shaft speed sensor and the A/T-ECU. <4M4>

OK ↓ | NG → **Repair**

Replace the input shaft speed sensor. ★ ↓

Check the trouble symptoms. ↓ NG

Overhaul the A/T. ★
- Replace the reverse clutch retainer.

↓

Check the trouble symptoms. ↓ NG

Eliminate the cause of the noise.

OK ↓

To the next page

Purchased from www.WorkshopManuals.co.uk

www.WorkshopManuals.co.uk

From the previous page

OK

Measure the output wave pattern of the output shaft speed sensor at engine-A/T-ECU connectors D-121 and D-122 <6G7>, or at A/T-ECU connector D-108 <4M4> (using an oscilloscope).
- Vehicle speed: approx. 50 km/h
- Shift range: 4th
  <6G7> Voltage between No.81 (D-121) and No.104 (D-122)
  <4M4> Voltage between No.32 (D-108) and No.43 (D-108)
  **OK:** A wave pattern such as the one shown on P.23-69 (Check Procedure Using an Oscilloscope) should be output, and the maximum value should be 4.8 V or more and the minimum value should be 0.8 V or less. There should be no noise in the output wave pattern.

NG →
- Check the harness between the output shaft speed sensor and the engine-A/T-ECU. <6G7>
- Check the harness between the output shaft speed sensor and the A/T-ECU. <4M4>

OK → NG → **Repair**

Replace the output shaft speed sensor. ★

Check the trouble symptoms.

NG

Overhaul the A/T. ★
- Replace the direct planetary carrier.

Check the trouble symptoms.

NG

Eliminate the cause of the noise.

OK

Replace the valve body assembly. ★

Check the trouble symptoms.

NG

Replace the engine-A/T-ECU or A/T-ECU.

Check the trouble symptoms.

NG

Overhaul the A/T. ★
- Replace the UD clutch. (Code No. 41, 43 or No. 44 is output, or no other codes are output.)
- Replace the 2ND brake. (Code No. 44 or No. 45 is output, or no other codes are output.)
- Replace the RED brake. (Code No. 41, 43 or No. 46 is output, or no other codes are output.)
- Replace the one-way clutch (OWC-D). (Code No. 41 or No. 43 is output, or no other codes are output.)

Purchased from www.WorkshopManuals.co.uk

www.WorkshopManuals.co.uk

| Code No.43 3rd without completion of shifting | Probable cause |
|---|---|
| If the output shaft speed sensor output multiplied by the 3rd gear ratio is not identical to the input shaft speed sensor output after shifting to 3rd, code No. 43 is output.<br>If code No. 43 is output 4 times, the transmission is fixed in 3rd and the N range lamp flashes at a rate of 1 Hz. | ● Malfunction of input shaft speed sensor<br>● Malfunction of output shaft speed sensor<br>● Malfunction of harness or connector<br>● Malfunction of solenoid valve<br>● Malfunction of reverse clutch retainer<br>● Malfunction of direct planetary carrier<br>● Malfunction of UD clutch system<br>● Malfunction of OD clutch system<br>● Malfunction of RED brake system<br>● Malfunction of one-way clutch system<br>● Malfunction of engine-A/T-ECU <6G7><br>● Malfunction of A/T-ECU <4M4><br>● Noise is generated. |

★ Refer to the Transmission Workshop Manual.

**MUT-II Self-Diag Code**
- Is code No. 22 output?

YES → Code No. 22 Input shaft speed sensor system check (Refer to P.23-20.)

NO ↓

**MUT-II Actuator Test**
- Is code No. 23 output?

YES → Code No. 23 Output shaft speed sensor system check (Refer to P.23-22.)

NO ↓

**MUT-II Actuator Test**
- No.1 LR solenoid valve
- No.2 UD solenoid valve
- No.3 2ND solenoid valve
- No.4 OD solenoid valve
- No.5 RED solenoid valve

**OK:** The sound of operation should be heard.

NG → Replace the appropriate solenoid valve. ★

OK ↓

Measure the output wave pattern of the input shaft speed sensor at engine-A/T-ECU connectors D-121 and D-122 <6G7>, or at A/T-ECU connector D-108 <4M4> (using an oscilloscope).
- Vehicle speed: approx. 50 km/h
- Shift range: 4th

<6G7> Voltage between No.81 (D-121) and No.103 (D-122)
<4M4> Voltage between No.31 (D-108) and No.43 (D-108)
**OK:** A wave pattern such as the one shown on P.23-69 (Check Procedure Using an Oscilloscope) should be output, and the maximum value should be 4.8 V or more and the minimum value should be 0.8 V or less. There should be no noise in the output wave pattern.

NG →
- Check the harness between the input shaft speed sensor and the engine-A/T-ECU. <6G7>
- Check the harness between the input shaft speed sensor and the A/T-ECU. <4M4>

OK ↓ NG → **Repair**

Replace the input shaft speed sensor. ★

↓

Check the trouble symptoms.

NG ↓

Overhaul the A/T. ★
- Replace the reverse clutch retainer.

↓

Check the trouble symptoms.

NG ↓

Eliminate the cause of the noise.

OK ↓

To the next page

Purchased from www.WorkshopManuals.co.uk

www.WorkshopManuals.co.uk

To the next page

OK

Measure the output wave pattern of the output shaft speed sensor at engine-A/T-ECU connectors D-121 and D-122 <6G7>, or at A/T-ECU connector D-108 <4M4> (using an oscilloscope).
- Vehicle speed: approx. 50 km/h
- Shift range: 4th
  <6G7>Voltage between No.81 (D-121) and No.104 (D-122)
  <4M4> Voltage between No.32 (D-108) and No.43 (D-108)
  **OK:** A wave pattern such as the one shown on P.23-69 (Check Procedure Using an Oscilloscope) should be output, and with the maximum value should be 4.8 V or more and the minimum value should be 0.8 V or less. There should be no noise in the output wave pattern.

NG

- Check the harness between the output shaft speed sensor and the engine-A/T-ECU. <6G7>
- Check the harness between the output shaft speed sensor and the A/T-ECU. <4M4>

OK

NG → **Repair**

Replace the output shaft speed sensor. ★

Check the trouble symptoms.

NG

Overhaul the A/T. ★
- Replace the direct planetary carrier.

Check the trouble symptoms.

NG

Eliminate the cause of the noise.

OK

Replace the valve body assembly. ★

Check the trouble symptoms.

NG

Replace the engine-A/T-ECU or A/T-ECU.

Check the trouble symptoms.

NG

Overhaul the A/T. ★
- Replace the UD clutch. (Code No. 41, 42 or No. 44 is output, or no other codes are output.)
- Replace the OD clutch. (Code No. 44 or No. 45 is output, or no other codes are output.)
- Replace the RED brake. (Code No. 41, 42 or No. 46 is output, or no other codes are output.)
- Replace the one-way clutch (OWC-D). (Code No. 41 or No. 42 is output, or no other codes are output.)

Purchased from www.WorkshopManuals.co.uk

www.WorkshopManuals.co.uk

| Code No.44 4th without completion of shifting | Probable cause |
|---|---|
| If the output shaft speed sensor output multiplied by the 4th gear ratio is not identical to the input shaft speed sensor output after shifting to 4th, code No. 44 is output.<br>If code No. 44 is output 4 times, the transmission is fixed in 3rd and the N range lamp flashes at a rate of 1 Hz. | ● Malfunction of input shaft speed sensor<br>● Malfunction of output shaft speed sensor<br>● Malfunction of harness or connector<br>● Malfunction of solenoid valve<br>● Malfunction of reverse clutch retainer<br>● Malfunction of direct planetary carrier<br>● Malfunction of UD clutch system<br>● Malfunction of 2ND brake system<br>● Malfunction of OD clutch system<br>● Malfunction of DIR clutch system<br>● Malfunction of engine-A/T-ECU <6G7><br>● Malfunction of A/T-ECU <4M4><br>● Noise is generated. |

★ Refer to the Transmission Workshop Manual.

**MUT-II Self-Diag Code**
- Is code No. 22 output?

YES → Code No. 22 Input shaft speed sensor system check (Refer to P.23-20.)

NO ↓

**MUT-II Actuator Test**
- Is code No. 23 output?

YES → Code No. 23 Output shaft speed sensor system check (Refer to P.23-22.)

NO ↓

**MUT-II Actuator Test**
- No.1 LR solenoid valve
- No.2 UD solenoid valve
- No.3 2ND solenoid valve
- No.4 OD solenoid valve
- No.5 RED solenoid valve

**OK:** The sound of operation should be heard.

NG → Replace the appropriate solenoid valve. ★

OK ↓

Measure the output wave pattern of the input shaft speed sensor at engine-A/T-ECU connectors D-121 and D-122 <6G7>, or at A/T-ECU connector D-108 <4M4> (using an oscilloscope).
- Vehicle speed: approx. 50 km/h
- Shift range: 4th

<6G7> Voltage between No.81 (D-121) and No.103 (D-122)
<4M4> Voltage between No.31 (D-108) and No.43 (D-108)
**OK:** A wave pattern such as the one shown on P.23-69 (Check Procedure Using an Oscilloscope) should be output, and the maximum value should be 4.8 V or more and the minimum value should be 0.8 V or less. There should be no noise in the output wave pattern.

NG →
- Check the harness between the input shaft speed sensor and the engine-A/T-ECU. <6G7>
- Check the harness between the input shaft speed sensor and the A/T-ECU. <4M4>

OK ↓ NG → **Repair**

Replace the input shaft speed sensor. ★

↓

Check the trouble symptoms.

NG ↓

Overhaul the A/T. ★
- Replace the reverse clutch retainer.

↓

Check the trouble symptoms.

NG ↓

Eliminate the cause of the noise.

OK ↓

To the next page

Purchased from www.WorkshopManuals.co.uk

www.WorkshopManuals.co.uk

From the previous page

OK

Measure the output wave pattern of the output shaft speed sensor at engine-A/T-ECU connectors D-121 and D-122 <6G7>, or at A/T-ECU connector D-108 <4M4> (using an oscilloscope).
- Vehicle speed: approx. 50 km/h
- Shift range: 4th
  <6G7> Voltage between No.81 (D-121) and No.104 (D-122)
  <4M4> Voltage between No.32 (D-108) and No.43 (D-108)
  **OK:** A wave pattern such as the one shown on P.23-69 (Check Procedure Using an Oscilloscope) should be output, and the maximum value should be 4.8 V or more and the minimum value should be 0.8 V or less. There should be no noise in the output wave pattern.

NG →
- Check the harness between the output shaft speed sensor and the engine-A/T-ECU. <6G7>
- Check the harness between the output shaft speed sensor and the A/T-ECU. <4M4>

OK → NG → **Repair**

Replace the output shaft speed sensor. ★

Check the trouble symptoms.

NG

Overhaul the A/T. ★
- Replace the direct planetary carrier.

Check the trouble symptoms.

NG

Eliminate the cause of the noise.

OK

Replace the valve body assembly. ★

Check the trouble symptoms.

NG

Replace the engine-A/T-ECU or A/T-ECU.

Check the trouble symptoms.

NG

Overhaul the A/T. ★
- Replace the UD clutch. (Code No. 41, 42 or No. 43 is output, or no other codes are output.)
- Replace the OD clutch. (Code No. 43 or No. 45 is output, or no other codes are output.)
- Replace the DIR clutch. (Code No. 45 is output, or no other codes are output.)

Purchased from www.WorkshopManuals.co.uk

www.WorkshopManuals.co.uk

| Code No.45 5th without completion of shifting | Probable cause |
|---|---|
| If the output shaft speed sensor output multiplied by the 5th gear ratio is not identical to the input shaft speed sensor output after shifting to 5th, code No. 45 is output.<br>If code No. 45 is output 4 times, the transmission is fixed in 3rd and the N range lamp flashes at a rate of 1 Hz. | • Malfunction of input shaft speed sensor<br>• Malfunction of output shaft speed sensor<br>• Malfunction of harness or connector<br>• Malfunction of solenoid valve<br>• Malfunction of reverse clutch retainer<br>• Malfunction of direct planetary carrier<br>• Malfunction of 2ND brake system<br>• Malfunction of OD clutch system<br>• Malfunction of DIR clutch system<br>• Malfunction of engine-A/T-ECU <6G7><br>• Malfunction of A/T-ECU. <4M4><br>• Noise is generated. |

★ Refer to the Transmission Workshop Manual.

**MUT-II Self-Diag Code**
- Is code No. 22 output?

YES → Code No. 22 Input shaft speed sensor system check (Refer to P.23-20.)

NO ↓

**MUT-II Actuator Test**
- Is code No. 23 output?

YES → Code No. 23 Output shaft speed sensor system check (Refer to P.23-22.)

NO ↓

**MUT-II Actuator Test**
- No.1 LR solenoid valve
- No.2 UD solenoid valve
- No.3 2ND solenoid valve
- No.4 OD solenoid valve
- No.5 RED solenoid valve

**OK:** The sound of operation should be heard.

NG → Replace the appropriate solenoid valve. ★

OK ↓

Measure the output wave pattern of the input shaft speed sensor at engine-A/T-ECU connectors D-121 and D-122 <6G7>, or at A/T-ECU connector D-108 <4M4> (using an oscilloscope).
- Vehicle speed: approx. 50 km/h
- Shift range: 4th

<6G7> Voltage between No.81 (D-121) and No.103 (D-122)
<4M4> Voltage between No.31 (D-108) and No.43 (D-108)
**OK:** A wave pattern such as the one shown on P.23-69 (Check Procedure Using an Oscilloscope) should be output, and the maximum value should be 4.8 V or more and the minimum value should be 0.8 V or less. There should be no noise in the output wave pattern.

NG →
- Check the harness between the input shaft speed sensor and the engine-A/T-ECU. <6G7>
- Check the harness between the input shaft speed sensor and the A/T-ECU. <4M4>

OK ↓ NG → **Repair**

Replace the input shaft speed sensor. ★

↓

Check the trouble symptoms.

NG ↓

Overhaul the A/T. ★
- Replace the reverse clutch retainer.

↓

Check the trouble symptoms.

NG ↓

Eliminate the cause of the noise.

OK ↓

To the next page

Purchased from www.WorkshopManuals.co.uk

www.WorkshopManuals.co.uk

From the previous page

OK

Measure the output wave pattern of the output shaft speed sensor at engine-A/T-ECU connectors D-121 and D-122 <6G7>, or at A/T-ECU connector D-108 <4M4> (using an oscilloscope).
- Vehicle speed: approx. 50 km/h
- Shift range: 4th
  <6G7> Voltage between No.81 (D-121) and No.104 (D-122)
  <4M4> Voltage between No.32 (D-108) and No.43 (D-108)
  **OK:** A wave pattern such as the one shown on P.23-69 (Check Procedure Using an Oscilloscope) should be output, and the maximum value should be 4.8 V or more and the minimum value should be 0.8 V or less. There should be no noise in the output wave pattern.

NG →
- Check the harness between the output shaft speed sensor and the engine-A/T-ECU. <6G7>
- Check the harness between the output shaft speed sensor and the A/T-ECU. <4M4>

OK → NG → **Repair**

Replace the output shaft speed sensor. ★

Check the trouble symptoms.

NG

Overhaul the A/T. ★
- Replace the direct planetary carrier.

Check the trouble symptoms.

NG

Eliminate the cause of the noise.

OK

Replace the valve body assembly. ★

Check the trouble symptoms.

NG

Replace the engine-A/T-ECU or A/T-ECU.

Check the trouble symptoms.

NG

Overhaul the A/T. ★
- Replace the OD clutch. (Code No. 43 or No. 44 is output, or no other codes are output.)
- Replace the 2ND brake. (Code No. 42 is output, or no other codes are output.)
- Replace the DIR clutch. (Code No. 44 is output, or no other codes are output.)

Purchased from www.WorkshopManuals.co.uk

www.WorkshopManuals.co.uk

| Code No. 46 Reverse without completion of shifting | Probable cause |
|---|---|
| If the output shaft speed sensor output multiplied by the reverse gear ratio is not identical to the input shaft speed sensor output after shifting to reverse, code No. 46 is output.<br>If code No. 46 is output 4 times, the transmission is fixed in 3rd and the N range lamp flashes at a rate of 1 Hz. | • Malfunction of input shaft speed sensor<br>• Malfunction of output shaft speed sensor<br>• Malfunction of harness or connector<br>• Malfunction of solenoid valve<br>• Malfunction of reverse clutch retainer<br>• Malfunction of direct planetary carrier<br>• Malfunction of LR brake system<br>• Malfunction of REV clutch system<br>• Malfunction of RED clutch system<br>• Malfunction of engine-A/T-ECU <6G7><br>• Malfunction of A/T-ECU <4M4><br>• Noise is generated. |

★ Refer to the Transmission Workshop Manual.

**MUT-II Self-Diag Code**
- Is code No. 22 output?

YES → Code No. 22 Input shaft speed sensor system check (Refer to P.23-20.)

NO ↓

**MUT-II Actuator Test**
- Is code No. 23 output?

YES → Code No. 23 Output shaft speed sensor system check (Refer to P.23-22.)

NO ↓

**MUT-II Actuator Test**
- No.1 LR solenoid valve
- No.2 UD solenoid valve
- No.3 2ND solenoid valve
- No.4 OD solenoid valve
- No.5 RED solenoid valve

**OK:** The sound of operation should be heard.

NG → Replace the appropriate solenoid valve. ★

OK ↓

Measure the output wave pattern of the input shaft speed sensor at engine-A/T-ECU connectors D-121 and D-122 <6G7>, or at A/T-ECU connector D-108 <4M4> (using an oscilloscope).
- Vehicle speed: approx. 50 km/h
- Shift range: 4th

<6G7> Voltage between No.81 (D-121) and No.103 (D-122)
<4M4> Voltage between No.31 (D-108) and No.43 (D-108)
**OK:** A wave pattern such as the one shown on P.23-69 (Check Procedure Using an Oscilloscope) should be output, and the maximum value should be 4.8 V or more and the minimum value should be 0.8 V or less. There should be no noise in the output wave pattern.

NG →
- Check the harness between the input shaft speed sensor and the engine-A/T-ECU. <6G7>
- Check the harness between the input shaft speed sensor and the A/T-ECU. <4M4>

OK ↓ NG → **Repair**

Replace the input shaft speed sensor. ★

↓

Check the trouble symptoms.

NG ↓

Overhaul the A/T. ★
- Replace the reverse clutch retainer.

↓

Check the trouble symptoms.

NG ↓

Eliminate the cause of the noise.

OK ↓

To the next page

Purchased from www.WorkshopManuals.co.uk

www.WorkshopManuals.co.uk

From the previous page

OK

Measure the output wave pattern of the output shaft speed sensor at engine-A/T-ECU connectors D-121 and D-122 <6G7>, or at A/T-ECU connector D-108 <4M4> (using an oscilloscope).
- Vehicle speed: approx. 50 km/h
- Shift range: 4th
  <6G7> Voltage between No.81 (D-121) and No.104 (D-122)
  <4M4> Voltage between No.32 (D-108) and No.43 (D-108)
  **OK:** A wave pattern such as the one shown on P.23-69 (Check Procedure Using an Oscilloscope) should be output, and the maximum value should be 4.8 V or more and the minimum value should be 0.8 V or less. There should be no noise in the output wave pattern.

NG →
- Check the harness between the output shaft speed sensor and the engine-A/T-ECU. <6G7>
- Check the harness between the output shaft speed sensor and the A/T-ECU. <4M4>

OK → NG → **Repair**

Replace the output shaft speed sensor. ★

Check the trouble symptoms.

NG

Overhaul the A/T. ★
- Replace the reverse clutch.

Check the trouble symptoms.

NG

Eliminate the cause of the noise.

OK

Replace the valve body assembly. ★

Check the trouble symptoms.

NG

Replace the engine-A/T-ECU or A/T-ECU.

Check the trouble symptoms.

NG

Overhaul the A/T. ★
- Replace the LR brake. (Code No. 41 is output, or no other codes are output.)
- Replace the REV clutch. (No other codes are output.) Replace the RED brake. (Code No. 41, 42 or No. 43 is output, or no other codes are output.)

| Code No. 51 Communication problem with engine-ECU | Probable cause |
|---|---|
| If normal communication cannot be carried out successfully for 1 second or more when the ignition switch is at the ON position, the system voltage is 10 V or higher and the engine speed is 450 r/min or higher, code No. 51 is output. Furthermore, code No. 51 is also output if a communication problem with receiving data continues for 4 seconds or more under the same conditions. | • Malfunction of engine-A/T-ECU <6G7><br>• Malfunction of engine-ECU <4M4><br>• Malfunction of A/T-ECU <4M4><br>• Malfunction of harness or connector <4M4> |

**<6G7>**

Malfunction of engine-A/T-ECU

**<4M4>**

**Check the following connectors:** D-112, D-109 → NG → **Repair**

OK

Check the harness between the engine-ECU and the A/T-ECU. → NG → **Repair**

OK

Check the trouble symptoms.

NG

Malfunction of A/T-ECU

Check the trouble symptoms. → NG → Replace the engine-ECU.

Purchased from www.WorkshopManuals.co.uk

www.WorkshopManuals.co.uk

| Code No. 52 Damper clutch control system | Probable cause |
|---|---|
| If the DCC solenoid valve drive duty ratio is 100% for a continuous period of 4 seconds or more when the damper clutch starts operating, it is judged that there is a problem with the damper clutch control system, and code No. 52 is output. | • Malfunction of input shaft speed sensor<br>• Malfunction of DCC solenoid valve<br>• Malfunction of harness or connector<br>• Malfunction of reverse clutch retainer<br>• Malfunction of engine-A/T-ECU <6G7><br>• Malfunction of A/T-ECU <4M4><br>• Malfunction of torque converter |

★ Refer to the Transmission Workshop Manual.

**MUT-II Self-Diag Code**
Is code No. 22 output?
- YES → Code No. 22 Input shaft speed sensor system check (Refer to P.23-20.)
- NO ↓

**MUT-II Actuator Test**
- No. 6 DCC solenoid valve
  **OK:** Sound of operation can be heard
- NG → Replace the DCC solenoid valve. ★
- OK ↓

Measure the output wave pattern of the output shaft speed sensor at engine-A/T-ECU connectors D-121 and D-122 <6G7>, or at A/T-ECU connector D-108 <4M4> (using an oscilloscope).
- Vehicle speed: approx. 50 km/h
- Shift range: 4th
  <6G7> Voltage between terminal 81 of D-121 and terminal 103 of D-122
  <4M4> Voltage between terminal 31 of D-108 and terminal 43 of D-108
  **OK:** A wave pattern such as the one shown on P.23-69 (Check Procedure Using an Oscilloscope) should be output, and the maximum value should be 4.8 V or more and the minimum value should be 0.8 V or less. There should be no noise in the output wave pattern.

- NG →
  - Check the harness between the input shaft speed sensor and the engine-A/T-ECU. <6G7>
  - Check the harness between the input shaft speed sensor and the A/T-ECU. <4M4>
  - NG → **Repair**
  - OK ↓
  - Replace the input shaft speed sensor. ★
  - ↓
  - Check the trouble symptoms.
    - NG → Overhaul the A/T. ★
      - Replace the reverse clutch retainer.
    - ↓
    - Check the trouble symptoms.
    - NG ↓
    - Eliminate the cause of the noise.
- OK ↓

Replace the valve body assembly. ★
↓
Check the trouble symptoms.
- NG ↓

Replace the engine-A/T-ECU or A/T-ECU.
↓
Check the trouble symptoms.
- NG → Replace the torque converter.

Purchased from www.WorkshopManuals.co.uk

www.WorkshopManuals.co.uk

| Code No. 54 A/T control relay system | Probable cause |
|---|---|
| If the A/T control relay voltage is less than 7 V after the ignition switch is turned to the ON position, it is judged that there is a short-circuit to earth or open circuit in the A/T control relay, and code No. 54 is output.<br>The transmission will be fixed in 3rd as a fail-safe measure, and the N range indicator will flash at a rate of 1 Hz. | • Malfunction of A/T control relay<br>• Malfunction of harness or connector<br>• Malfunction of engine-A/T-ECU <6G7><br>• Malfunction of A/T-ECU <4M4> |

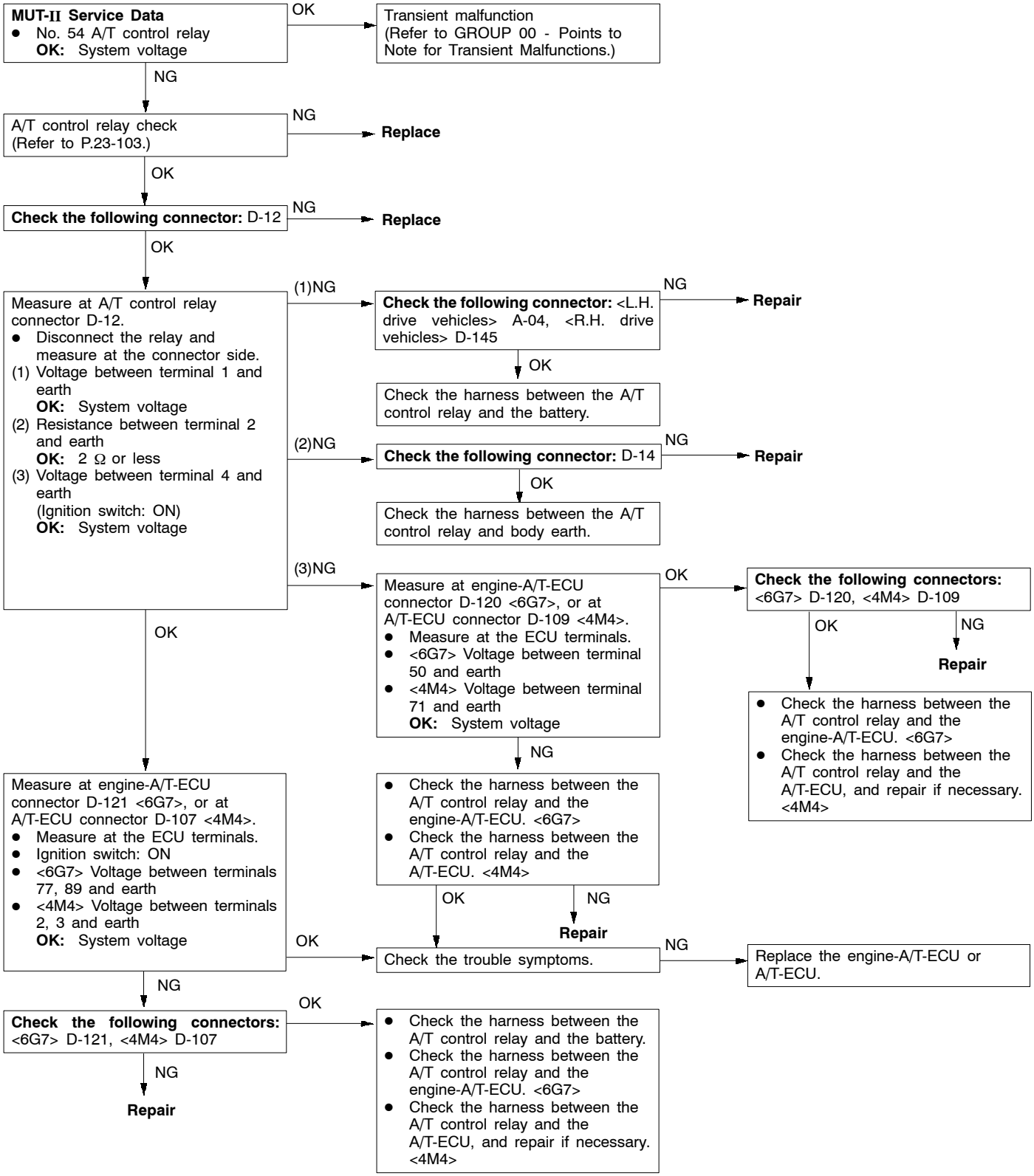


Purchased from www.WorkshopManuals.co.uk

www.WorkshopManuals.co.uk

| Code No. 56 N range lamp system | Probable cause |
|---|---|
| If the N range signal is OFF after the N range lamp illuminates (ON), it is judged that there is a short-circuit to earth in the N range lamp, and code No. 56 is output. | • Malfunction of Combination meter<br>• Malfunction of harness or connector<br>• Malfunction of engine-A/T-ECU <6G7><br>• Malfunction of A/T-ECU <4M4> |

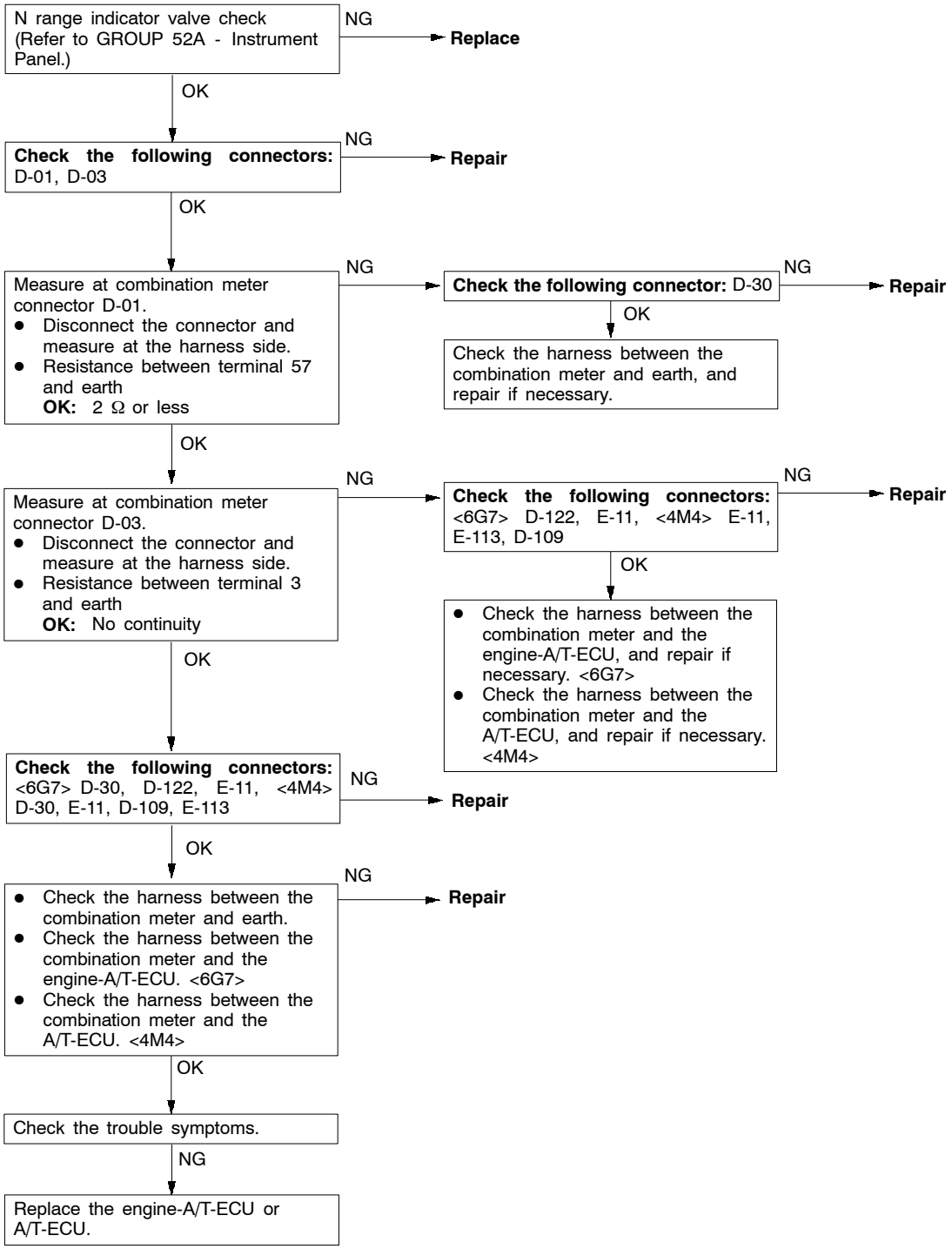


Purchased from www.WorkshopManuals.co.uk

www.WorkshopManuals.co.uk

## CHART CLASSIFIED BY TROUBLE SYMPTOMS

| Trouble Symptom | | Inspection procedure No. | Reference page |
|---|---|---|---|
| Communication with the MUT-II is not possible. | | 1 | 23-48 |
| Driving not possible | Starting not possible | 2 | 23-49 |
| | Does not move forward | 3 | 23-49 |
| | Does not reverse | 4 | 23-50 |
| | Does not move (forward or reverse) | 5 | 23-51 |
| Malfunction when starting off | Engine stalls during shifting | 6 | 23-51 |
| | N-to-D shocks, large time lag | 7 | 23-52 |
| | N-to-R shocks, large time lag | 8 | 23-53 |
| | N-to-D, N-to-R shocks, large time lag | 9 | 23-54 |
| Problem during shifting | Shocks, engine racing | 10 | 23-54 |
| Incorrect shift points | All points | 11 | 23-55 |
| | Some points | 12 | 23-56 |
| No shifting | No diagnosis code | 13 | 23-56 |
| Problem during driving | Poor acceleration | 14 | 23-57 |
| | Vibration | 15 | 23-57 |
| Inhibitor switch system | | 16 | 23-58 |
| Shift switch assembly system | | 17 | 23-58 |
| Dual pressure switch system | | 18 | 23-59 |
| Vehicle speed sensor system | | 19 | 23-59 |
| 4LLc switch system | | 20 | 23-60 |

Purchased from www.WorkshopManuals.co.uk

www.WorkshopManuals.co.uk

# INSPECTION PROCEDURES CLASSIFIED BY TROUBLE SYMPTOM

## Inspection procedure 1

| Communication with the MUT-II is not possible. | Probable cause |
|---|---|
| If communication with the MUT-II is not possible, the cause is probably a malfunction of the diagnosis line or the A/T-ECU is not functioning. | • Malfunction of diagnosis line<br>• Malfunction of harness or connector<br>• Malfunction of engine-A/T-ECU <6G7><br>• Malfunction of A/T-ECU <4M4> |

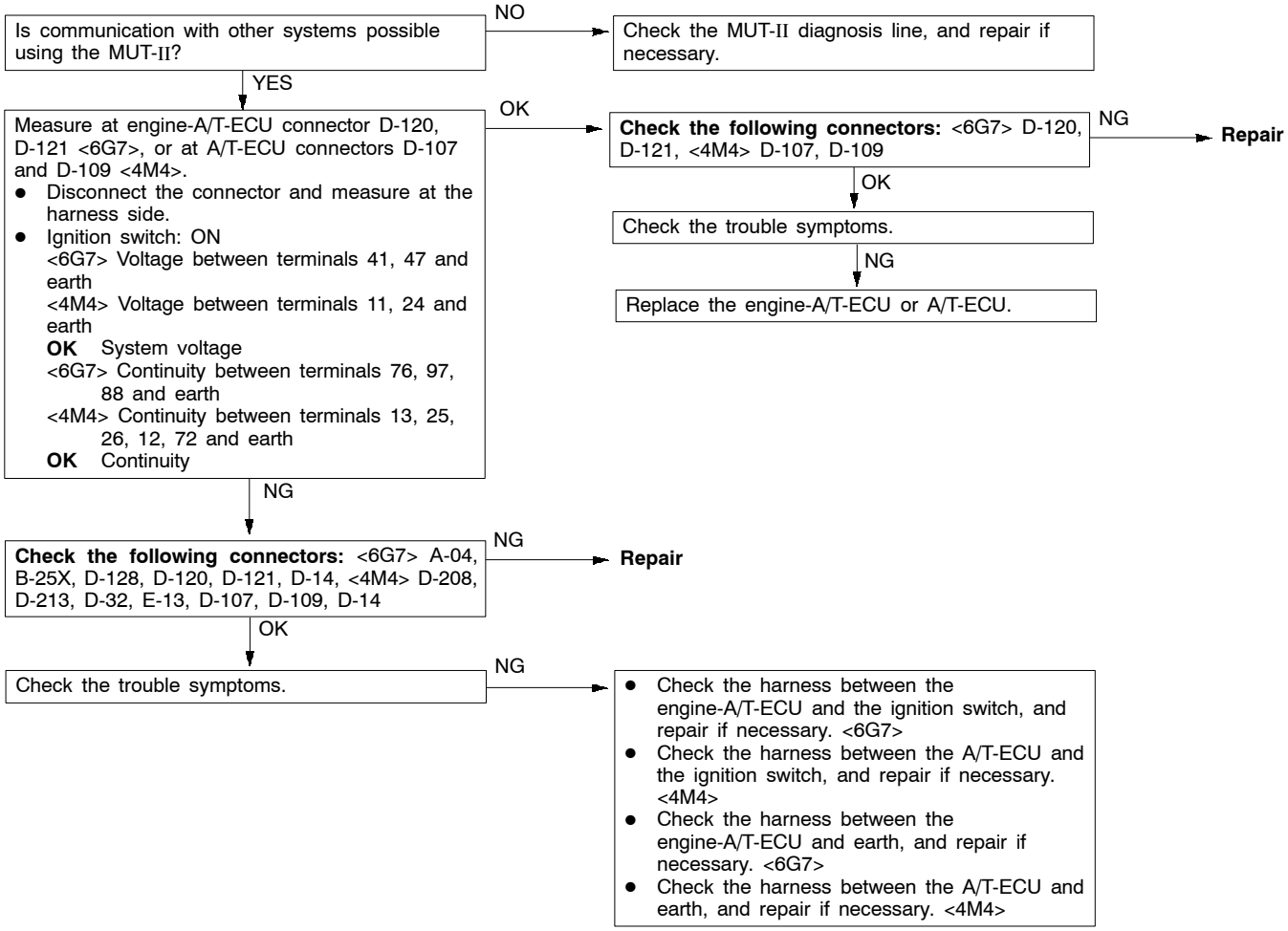


Purchased from www.WorkshopManuals.co.uk

www.WorkshopManuals.co.uk

## Inspection procedure 2

| Starting not possible | Probable cause |
|---|---|
| If the engine will not start when the selector lever is at the P or N position, the cause is probably a malfunction of the inhibitor switch system, the transmission control cable assembly, the engine system, the torque converter or the oil pump. | • Malfunction of inhibitor switch system<br>• Malfunction of transmission control cable assembly<br>• Malfunction of engine system<br>• Malfunction of torque converter<br>• Malfunction of oil pump<br>• Malfunction of engine-A/T-ECU <6G7><br>• Malfunction of A/T-ECU <4M4> |

★ Refer to the Transmission Workshop Manual.

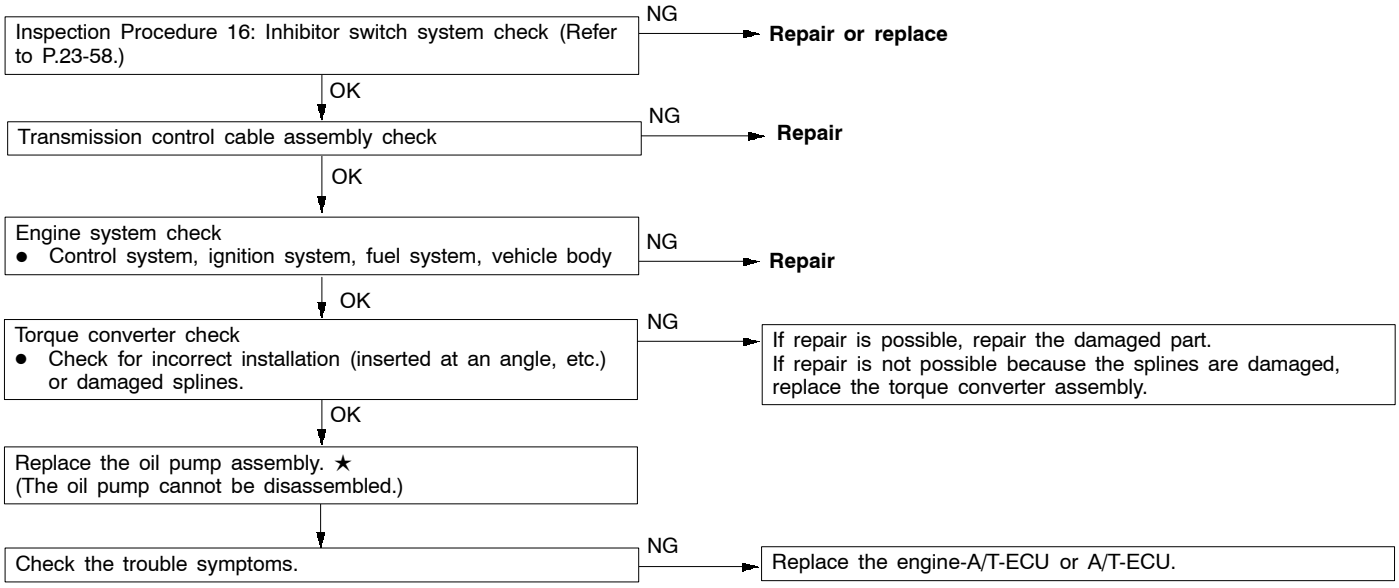


## Inspection procedure 3

| Does not move forward | Probable cause |
|---|---|
| If the vehicle does not move forward when the engine is idling and the selector lever is moved from N to D, 3, 2 or L, or if it is shifted to 1st or 2nd in Sports mode, the cause is probably a problem with line pressure, or a malfunction of the UD clutch or valve body. | • Abnormal line pressure<br>• Malfunction of UD solenoid valve<br>• Malfunction of UD clutch system<br>• Malfunction of valve body<br>• Malfunction of engine-A/T-ECU <6G7><br>• Malfunction of A/T-ECU <4M4> |

★ Refer to the Transmission Workshop Manual.

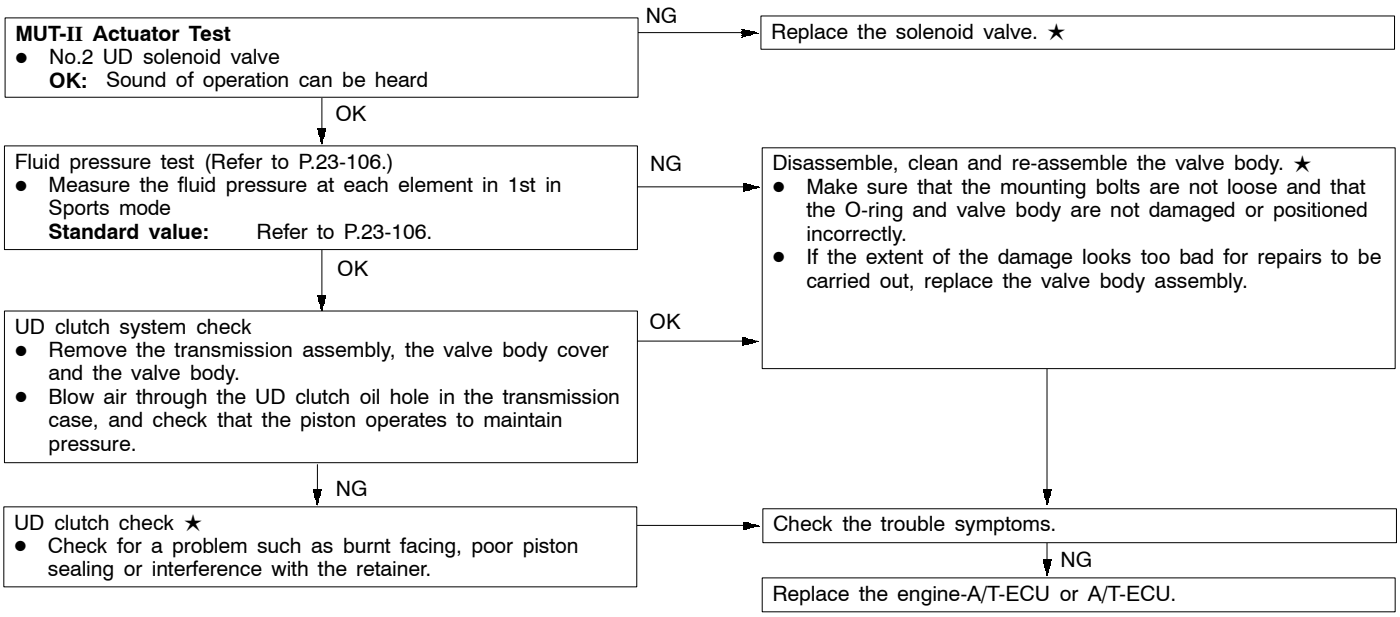


Purchased from www.WorkshopManuals.co.uk

www.WorkshopManuals.co.uk

## Inspection procedure 4

| Does not reverse | Probable cause |
|---|---|
| If the vehicle does not reverse when the engine is idling and the selector lever is moved from N to R, the cause is probably a problem with reverse clutch pressure or LR brake pressure, or a malfunction of the reverse clutch, LD clutch or valve body. | • Abnormal reverse clutch pressure<br>• Abnormal LR brake pressure<br>• Malfunction of LR solenoid valve<br>• Malfunction of reverse clutch<br>• Malfunction of LR brake<br>• Malfunction of valve body<br>• Replacement of engine-A/T-ECU <6G7><br>• Replacement of A/T-ECU. <4M4> |

★ Refer to the Transmission Workshop Manual.

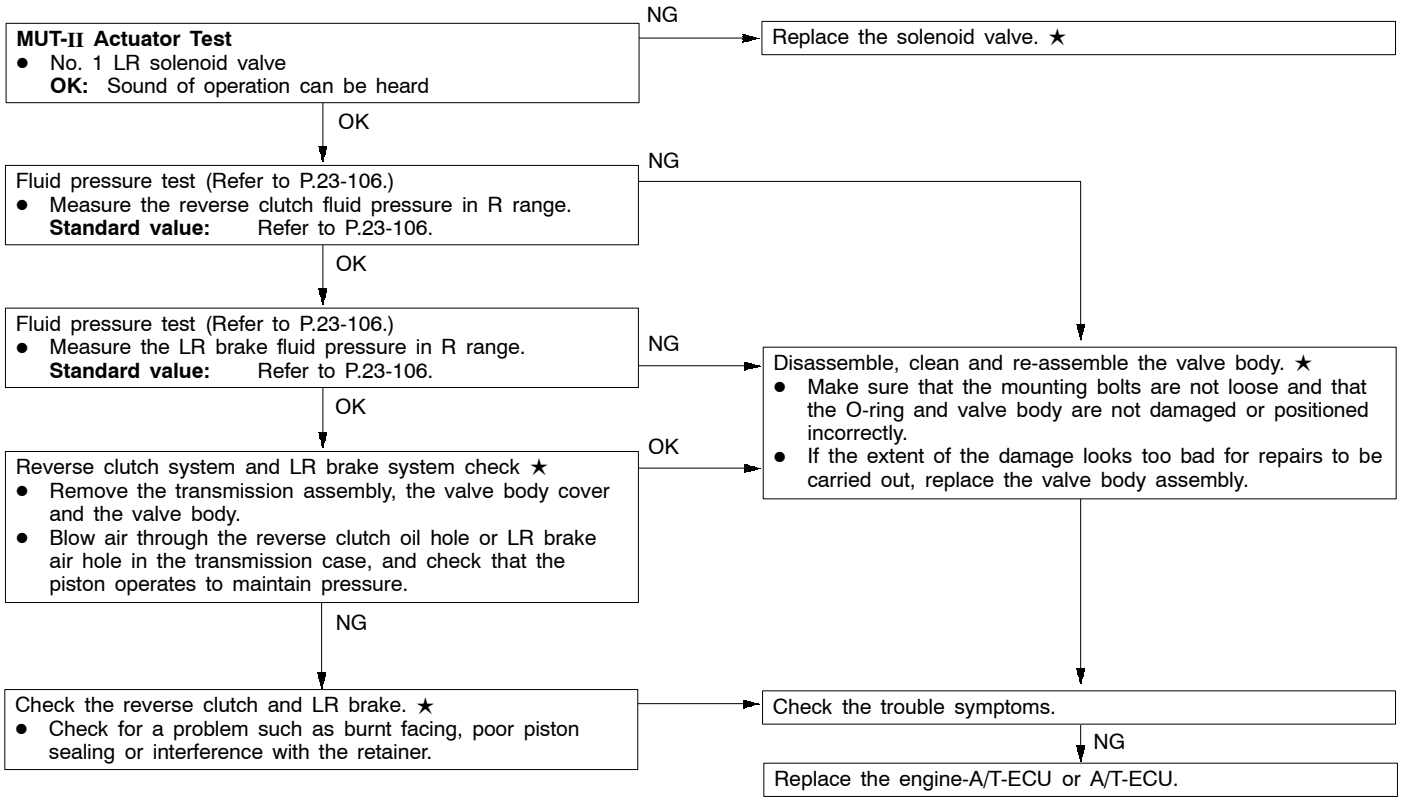


Purchased from www.WorkshopManuals.co.uk

www.WorkshopManuals.co.uk

## Inspection procedure 5

| Does not move (forward or reverse) | Probable cause |
|---|---|
| If the vehicle does not move forward or reverse when the selector lever is moved to any position while the engine is idling, the cause is probably a problem with line pressure or a malfunction of the oil pumps and valve bodies in the power train. | • Abnormal line pressure<br>• Malfunction of power train components<br>• Malfunction of oil pump<br>• Malfunction of valve body<br>• Malfunction of engine-A/T-ECU <6G7><br>• Malfunction of A/T-ECU <4M4> |

★ Refer to the Transmission Workshop Manual.

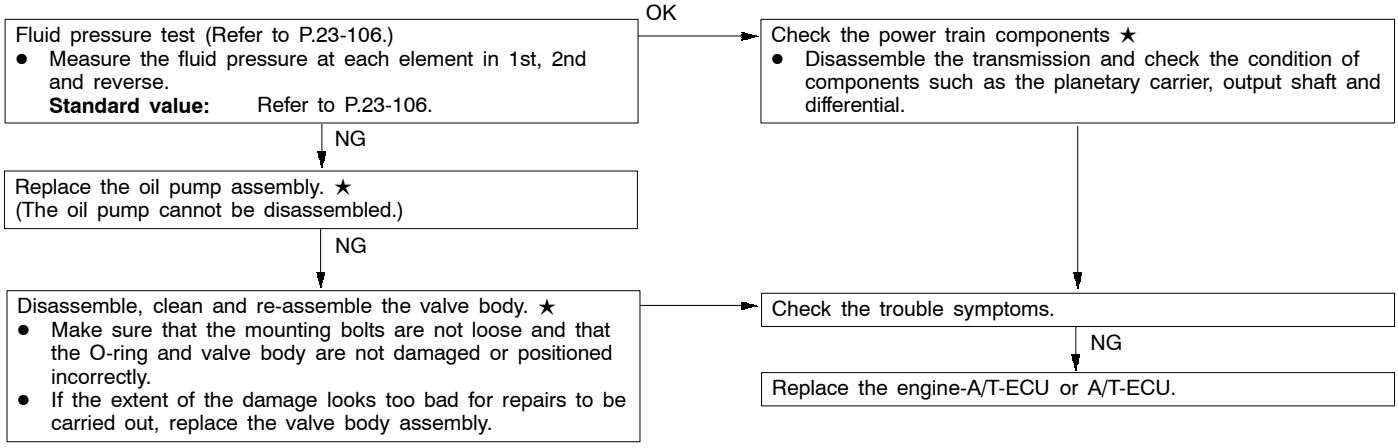


## Inspection procedure 6

| Engine stalls during shifting | Probable cause |
|---|---|
| If the engine stalls when the selector lever is moved from N to D or R while the engine is idling, the cause is probably a malfunction of the engine system, DCC solenoid valve, valve body, or torque converter (damper clutch). | • Malfunction of engine system<br>• Malfunction of DCC solenoid valve<br>• Malfunction of valve body<br>• Malfunction of torque converter (malfunction of damper clutch)<br>• Malfunction of engine-A/T-ECU <6G7><br>• Malfunction of A/T-ECU <4M4> |

★ Refer to the Transmission Workshop Manual.

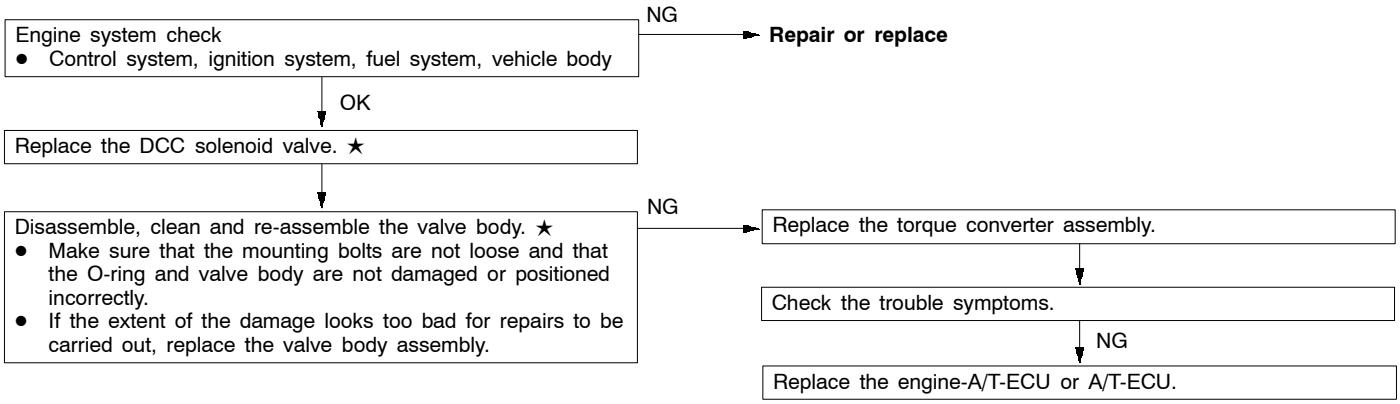


Purchased from www.WorkshopManuals.co.uk

www.WorkshopManuals.co.uk

## Inspection procedure 7

| N-to-D shocks, large time lag | Probable cause |
|---|---|
| If abnormal shocks or a time lag of 2 seconds or more occurs when the selector lever is moved from N to D while the engine is idling, the cause is probably abnormal UD clutch pressure, or a malfunction of the UD clutch, valve body or APS. | • Abnormal UD clutch pressure<br>• Malfunction of UD solenoid valve<br>• Malfunction of UD clutch system<br>• Malfunction of valve body<br>• Malfunction of APS<br>• Malfunction of engine-A/T-ECU <6G7><br>• Malfunction of A/T-ECU <4M4> |

★ Refer to the Transmission Workshop Manual.

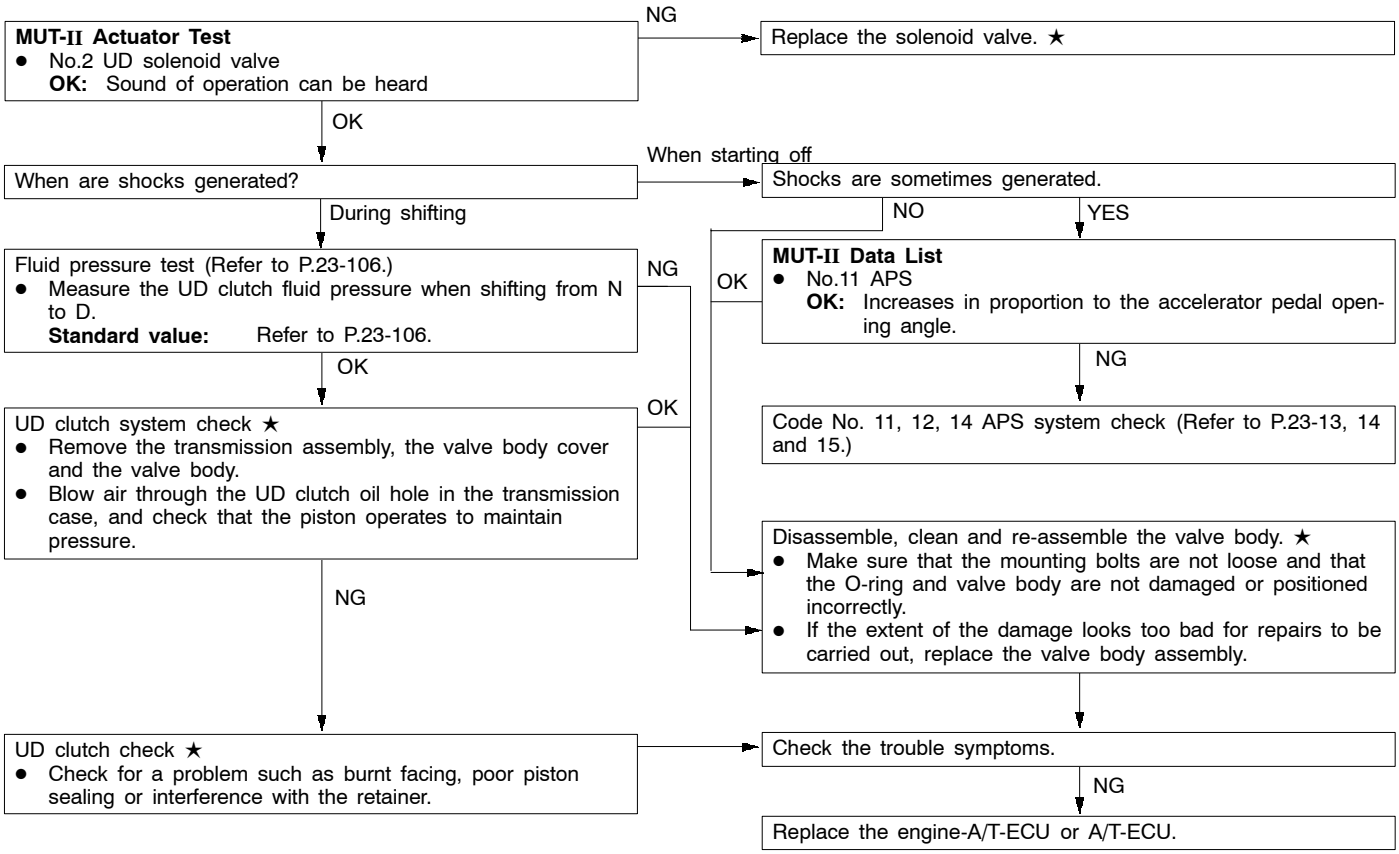


Purchased from www.WorkshopManuals.co.uk

www.WorkshopManuals.co.uk

## Inspection procedure 8

| N to R shocks, large time lag | Probable cause |
|---|---|
| If abnormal shocks or a time lag of 2 seconds or more occurs when the selector lever is moved from N to R while the engine is idling, the cause is probably abnormal reverse clutch pressure or LD brake pressure, or a malfunction of the reverse clutch, LR brake, valve body or APS. | • Abnormal reverse clutch pressure<br>• Abnormal LR brake pressure<br>• Malfunction of LR solenoid valve<br>• Malfunction of reverse clutch<br>• Malfunction of LR brake<br>• Malfunction of valve body<br>• Malfunction of APS<br>• Malfunction of engine-A/T-ECU <6G7><br>• Malfunction of A/T-ECU <4M4> |

★ Refer to the Transmission Workshop Manual.

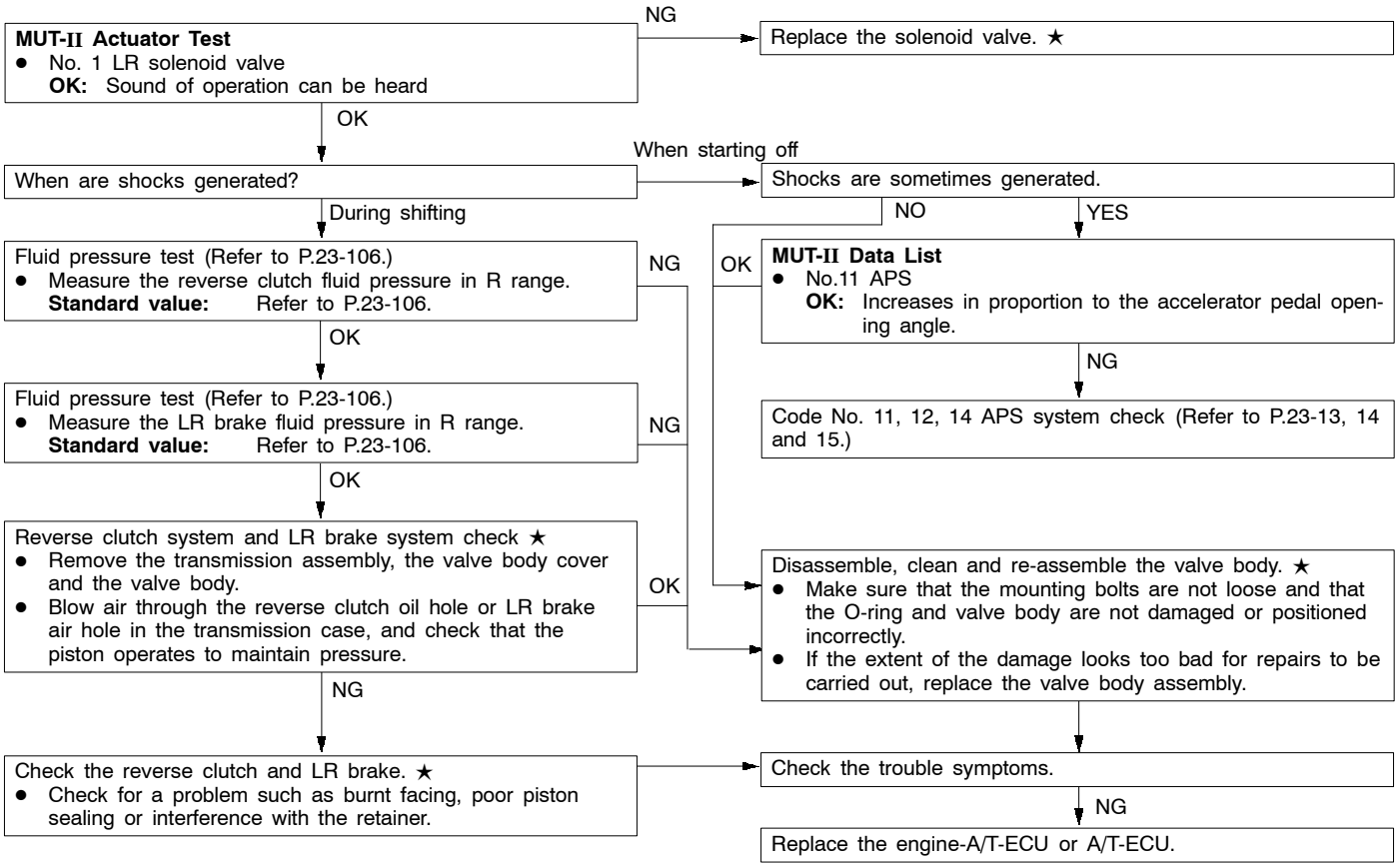


Purchased from www.WorkshopManuals.co.uk

www.WorkshopManuals.co.uk

## Inspection procedure 9

| N-to-D and N-to-R shocks, large time lag | Probable cause |
|---|---|
| If abnormal shocks or a time lag of 2 seconds or more occurs when the selector lever is moved from N to both D and R while the engine is idling, the cause is probably abnormal line pressure, or a malfunction of the oil pump or valve body. | • Abnormal line pressure<br>• Malfunction of oil pump<br>• Malfunction of valve body<br>• Malfunction of engine-A/T-ECU <6G7><br>• Malfunction of A/T-ECU <4M4> |

★ Refer to the Transmission Workshop Manual.

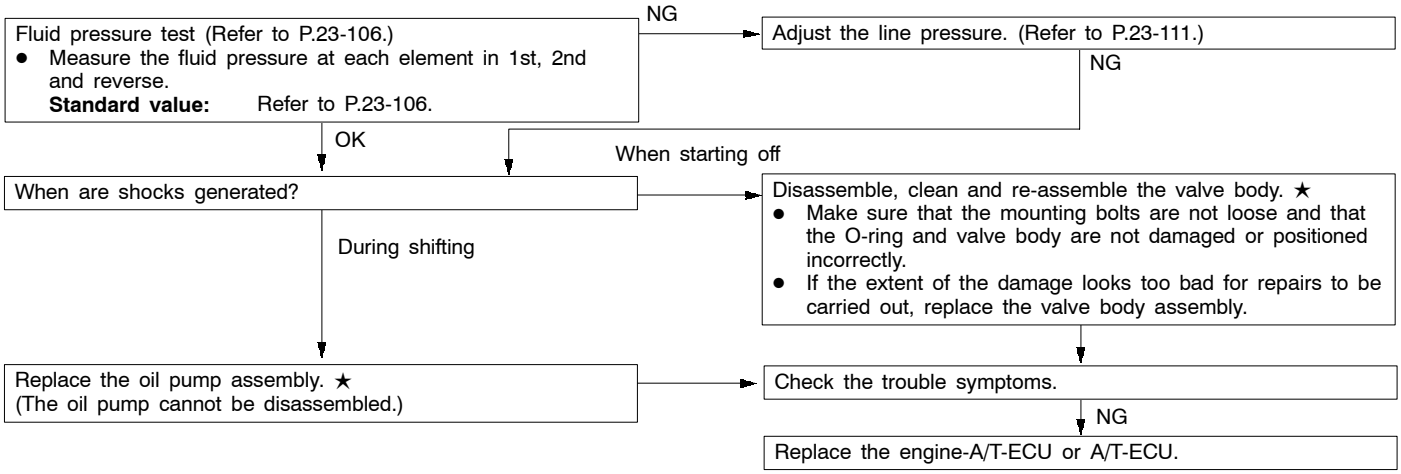


## Inspection procedure 10

| Shocks, engine racing | Probable cause |
|---|---|
| If shocks occur when driving due to upshifting or downshifting, or the transmission speed becomes higher than the engine speed, the cause is probably abnormal line pressure or a malfunction of a solenoid valve, oil pump, valve body or of a brake or clutch. | • Abnormal line pressure<br>• Malfunction of solenoid valve<br>• Malfunction of oil pump<br>• Malfunction of valve body<br>• Malfunction of brake or clutch<br>• Malfunction of engine-A/T-ECU <6G7><br>• Malfunction of A/T-ECU <4M4> |

★ Refer to the Transmission Workshop Manual.

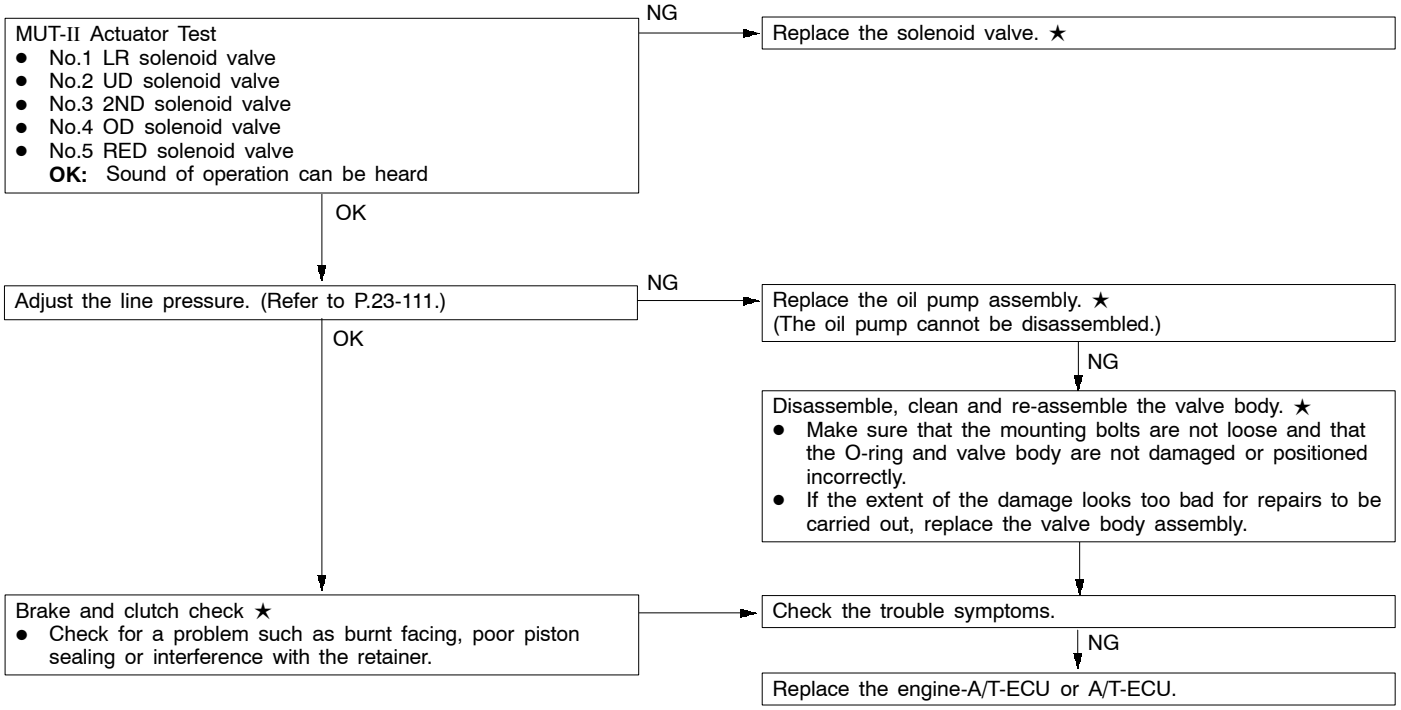


Purchased from www.WorkshopManuals.co.uk

www.WorkshopManuals.co.uk

## Inspection procedure 11

| All points (incorrect shift points) | Probable cause |
|---|---|
| If all shift points are incorrect during driving, the cause is probably a malfunction of the output speed sensor, APS or solenoid valve. | • Malfunction of output shaft speed sensor<br>• Malfunction of APS<br>• Malfunction of solenoid valve<br>• Abnormal line pressure<br>• Malfunction of valve body<br>• Malfunction of engine-A/T-ECU <6G7><br>• Malfunction of A/T-ECU <4M4> |

★ Refer to the Transmission Workshop Manual.

**MUT-II Data List**
- No. 23 Output shaft speed sensor system

**OK:** Increases in proportion to vehicle speed.

NG → Code No. 23 Output shaft speed sensor system (Refer to P.23-22.)

OK ↓

**MUT-II Data List**
- No.11 APS

**OK:** Increases in proportion to the accelerator pedal opening angle.

NG → Code No. 11, 12, 14 APS system check (Refer to P.23-13, 14 and 15.)

OK ↓

**MUT-II Data List**
- No. 31 RED solenoid valve duty ratio
- No. 32 UD solenoid valve duty ratio
- No. 33 2ND solenoid valve duty ratio
- No. 34 OD solenoid valve duty ratio
- No. 35 RED solenoid valve duty ratio

**OK:**

| | No.31 | No.32 | No.33 | No.34 | No.35 |
|---|---|---|---|---|---|
| Driving at aconstant speed in 1st | 0% | 0% | 100% | 100% | 0% |
| Driving at a constant speed in 2nd | 100% | 0% | 0% | 100% | 0% |
| Driving at a constant speed in 3rd | 100% | 0% | 100% | 0% | 0% |
| Driving at a constant speed in 4th | 0% | 0% | 100% | 0% | 100% |
| Driving at a constant speed in 5th | 0% | 100% | 0% | 0% | 100% |

NG → Replace the solenoid valve. ★

OK ↓

Adjust the line pressure. (Refer to P.23-111.)

NG ↓

Disassemble, clean and re-assemble the valve body. ★
- Make sure that the mounting bolts are not loose and that the O-ring and valve body are not damaged or positioned incorrectly.
- If the extent of the damage looks too bad for repairs to be carried out, replace the valve body assembly.

→ Check the trouble symptoms.

NG ↓

Replace the engine-A/T-ECU or A/T-ECU.

Purchased from www.WorkshopManuals.co.uk

www.WorkshopManuals.co.uk

## Inspection procedure 12

| Some points (incorrect shift points) | Probable cause |
|---|---|
| If some of the shift points are incorrect while driving, the cause is probably a malfunction of the valve body, or it is a characteristic of control and is not a malfunction. | • Malfunction of valve body<br>• Malfunction of engine-A/T-ECU <6G7><br>• Malfunction of A/T-ECU <4M4> |

★ Refer to the Transmission Workshop Manual.

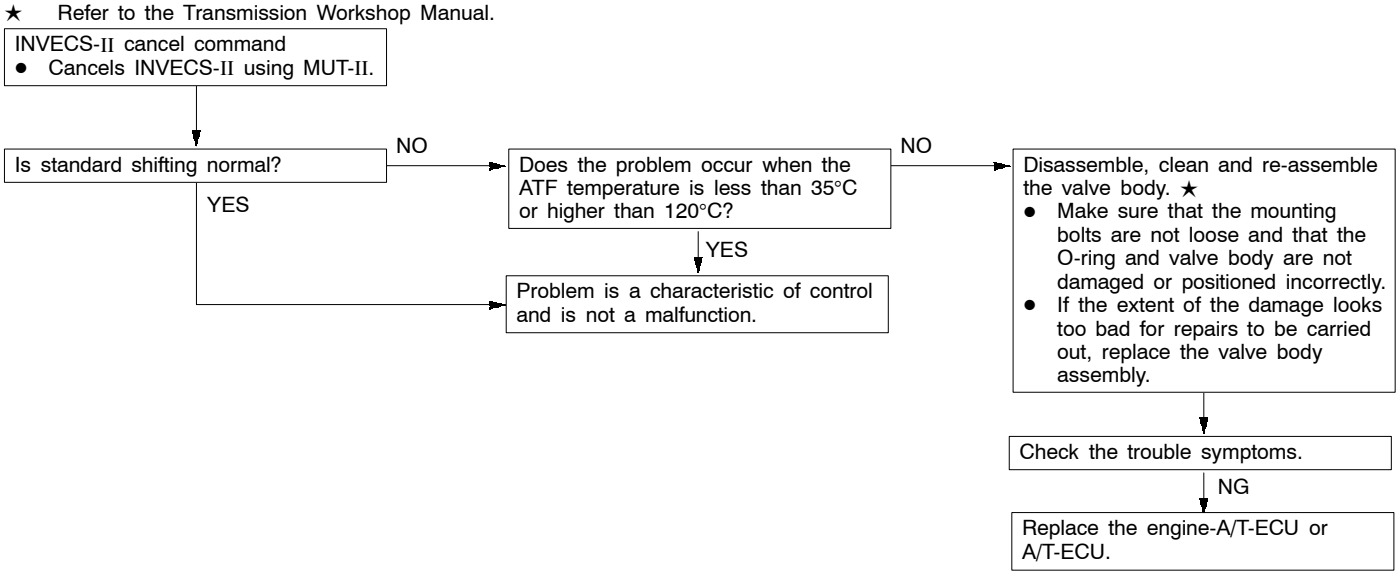


## Inspection procedure 13

| No diagnosis code (no shifting) | Probable cause |
|---|---|
| No shifting during driving<br>However, if a diagnosis code is not output, the cause is probably malfunction of the inhibitor switch system, the shift switch assembly, the engine A/T-ECU or the A/T-ECU. | • Malfunction of Inhibitor switch<br>• Malfunction of shift switch assembly system<br>• Malfunction of engine-A/T-ECU <6G7><br>• Malfunction of A/T-ECU <4M4> |

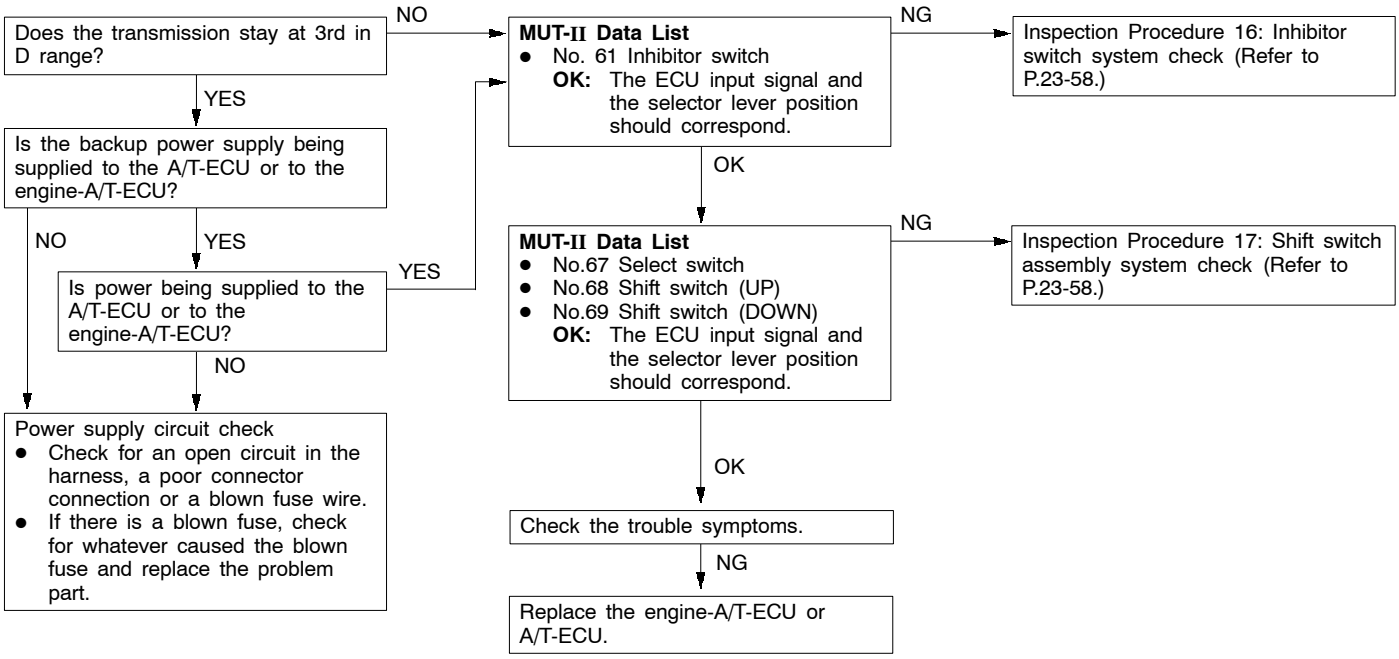


Purchased from www.WorkshopManuals.co.uk

www.WorkshopManuals.co.uk

## Inspection procedure 14

| Poor acceleration | Probable cause |
|---|---|
| If the vehicle does not accelerate after downshifting, the cause is probably a malfunction of the engine system or of a brake or clutch. | ● Malfunction of engine system<br>● Malfunction of brake or clutch<br>● Malfunction of engine-A/T-ECU <6G7><br>● Malfunction of A/T-ECU <4M4> |

★ Refer to the Transmission Workshop Manual.

Engine system check
- Control system, ignition system, fuel system, vehicle body

NG → **Repair or replace**

OK ↓

Brake and clutch check ★
- Check for a problem such as burnt facing, poor piston sealing or interference with the retainer.

→ Check the trouble symptoms.

NG ↓

Replace the engine-A/T-ECU or A/T-ECU.

## Inspection procedure 15

| Vibration | Probable cause |
|---|---|
| If vibration occurs when accelerating or decelerating while driving at a constant speed or driving in top range, the cause is probably abnormal damper clutch pressure, or a malfunction of the engine system, DCC solenoid valve, torque converter or valve body. | ● Abnormal damper clutch pressure<br>● Malfunction of engine system<br>● Malfunction of DCC solenoid valve<br>● Malfunction of torque converter<br>● Malfunction of valve body<br>● Malfunction of engine-A/T-ECU <6G7><br>● Malfunction of A/T-ECU <4M4> |

★ Refer to the Transmission Workshop Manual.

**MUT-II Actuator Test**
- No. 6 DCC solenoid valve
  **OK:** Sound of operation can be heard

NG → Replace the DCC solenoid valve. ★

OK ↓

Does the problem still occur when the engine coolant temperature sensor is disconnected?

YES → Engine system check
- Control system, ignition system, fuel system, vehicle body

NO ↓

Fluid pressure test (Refer to P.23-106.)
- Measure the damper clutch fluid pressure.
  **Standard value:** Refer to P.23-106.

NG → Disassemble, clean and re-assemble the valve body. ★
- Make sure that the mounting bolts are not loose and that the O-ring and valve body are not damaged or positioned incorrectly.
- If the extent of the damage looks too bad for repairs to be carried out, replace the valve body assembly.

OK ↓

Replace the torque converter assembly. → Check the trouble symptoms.

OK ↓

Replace the engine-A/T-ECU or A/T-ECU.

Purchased from www.WorkshopManuals.co.uk

www.WorkshopManuals.co.uk

## Inspection procedure 16

| Inhibitor switch system | Probable cause |
|---|---|
| The cause is probably a malfunction of the inhibitor switch circuit or the ignition switch circuit. | • Malfunction of Inhibitor switch<br>• Malfunction of ignition switch<br>• Malfunction of harness or connector<br>• Malfunction of engine-A/T-ECU <6G7><br>• Malfunction of A/T-ECU <4M4> |

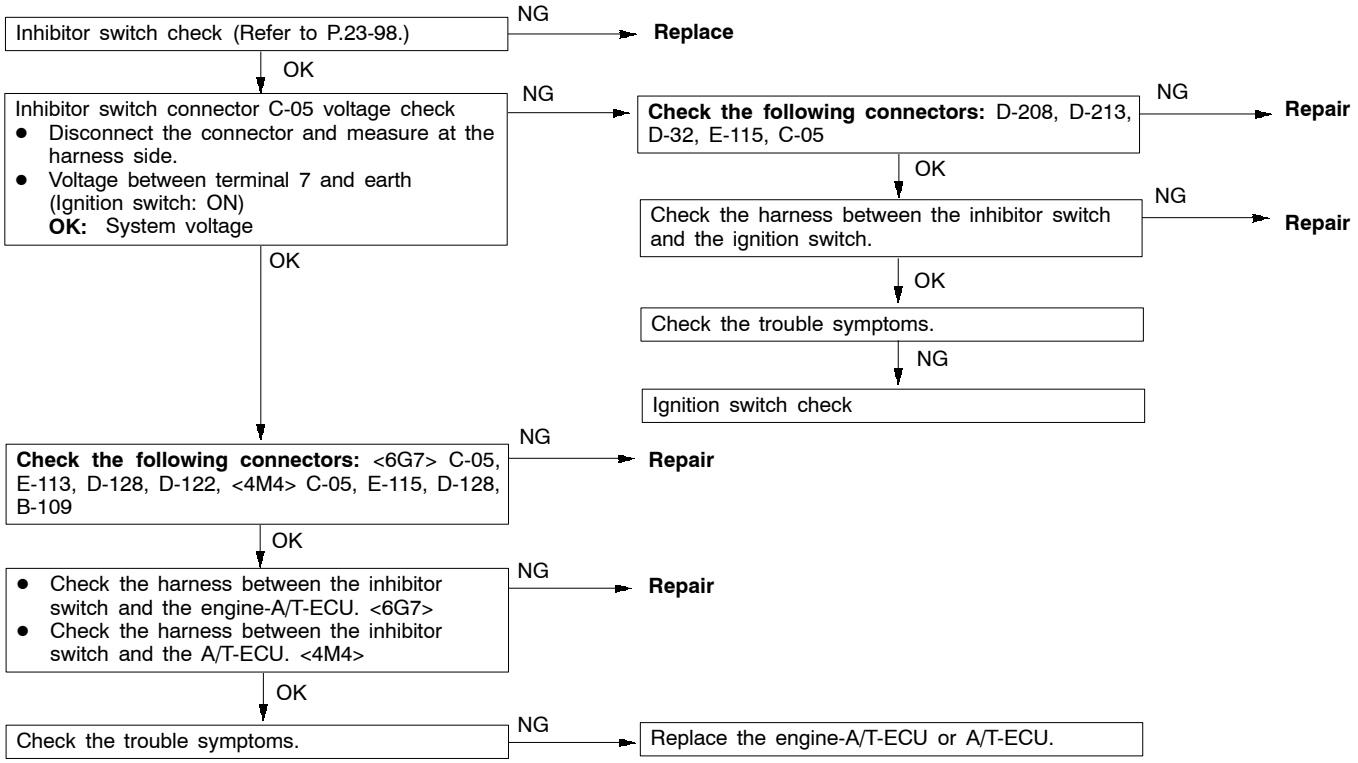


## Inspection procedure 17

| Shift switch assembly system | Probable cause |
|---|---|
| The cause is probably a malfunction of the inhibitor switch circuit, shift switch assembly circuit, or of the engine-A/T-ECU or A/T-ECU. | • Malfunction of inhibitor switch<br>• Malfunction of select switch<br>• Malfunction of shift switch (UP)<br>• Malfunction of shift switch (DOWN)<br>• Malfunction of harness or connector<br>• Malfunction of engine-A/T-ECU <6G7><br>• Malfunction of A/T-ECU <4M4> |

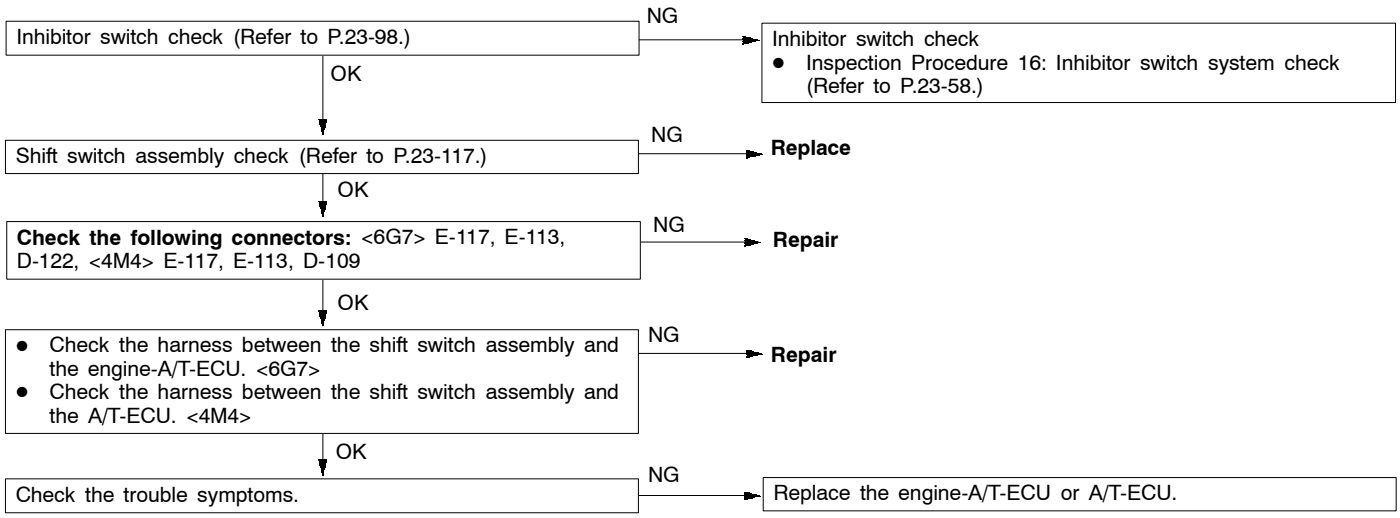


Purchased from www.WorkshopManuals.co.uk

www.WorkshopManuals.co.uk

## Inspection procedure 18

| Dual pressure switch system | Probable cause |
|---|---|
| The cause is probably a malfunction of the dual pressure switch circuit, or of the engine-A/T-ECU or A/T-ECU. | • Malfunction of dual pressure switch<br>• Malfunction of harness or connector<br>• Malfunction of A/C system<br>• Malfunction of engine-A/T-ECU <6G7><br>• Malfunction of A/T-ECU <4M4> |

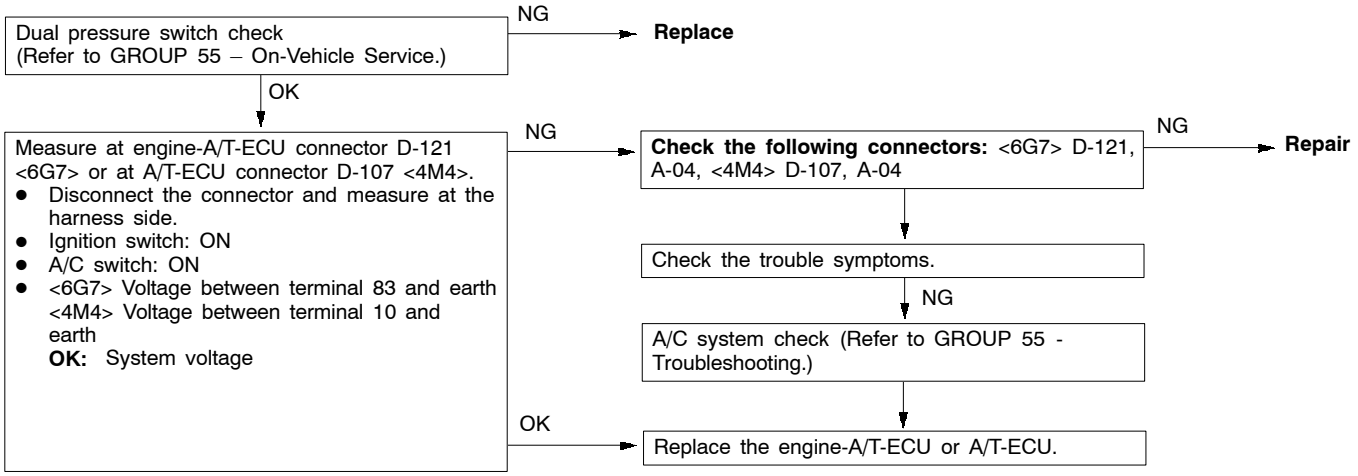


## Inspection procedure 19

| Vehicle speed sensor system | Probable cause |
|---|---|
| The cause is probably a malfunction of the vehicle speed sensor circuit, or of the A/T-ECU or the engine-A/T-ECU. | • Malfunction of vehicle speed sensor<br>• Malfunction of connector<br>• Malfunction of engine-A/T-ECU <6G7><br>• Malfunction of A/T-ECU <4M4> |

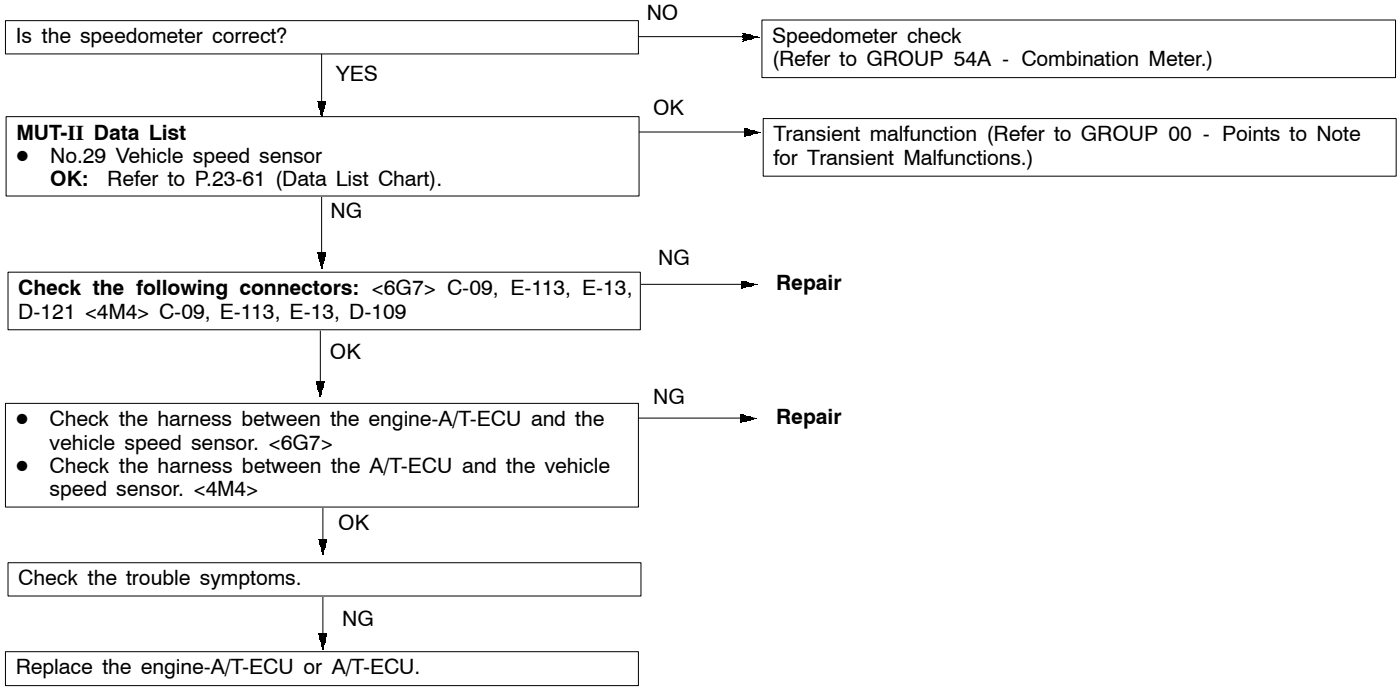


Purchased from www.WorkshopManuals.co.uk

www.WorkshopManuals.co.uk

## Inspection procedure 20

| 4LLc switch system | Probable cause |
|---|---|
| The cause is probably a malfunction of the 4LLc switch circuit, or of the engine-A/T-ECU or A/T-ECU. | • Malfunction of 4LLc switch<br>• Malfunction of harness or connector<br>• Malfunction of engine-A/T-ECU <6G7><br>• Malfunction of A/T-ECU <4M4> |

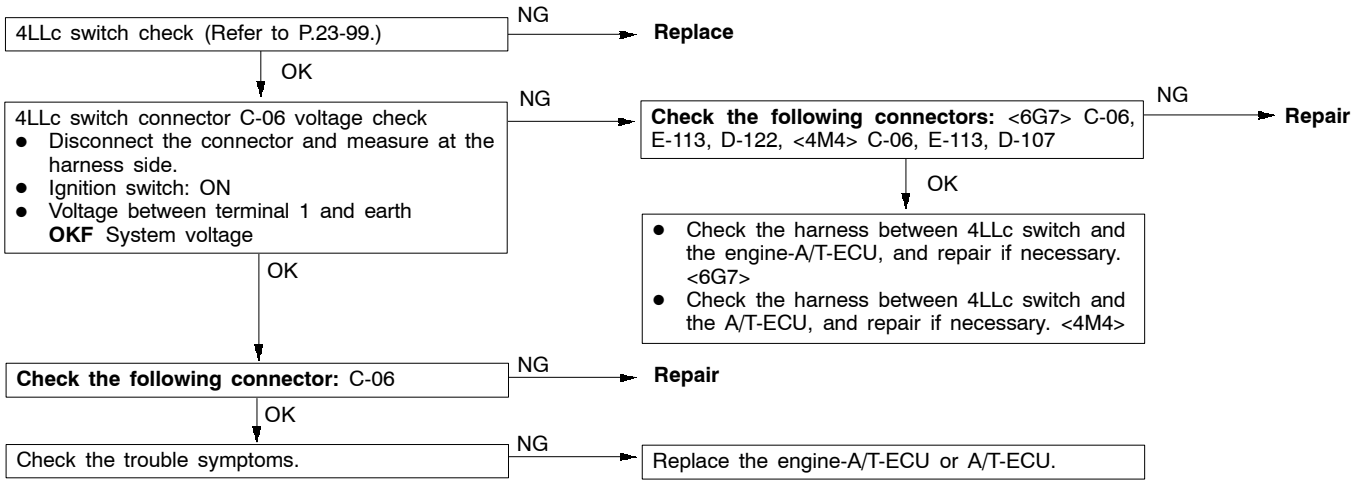


Purchased from www.WorkshopManuals.co.uk

www.WorkshopManuals.co.uk

## DATA LIST REFERENCE TABLE

| Data list No. | Check item | Inspection conditions | | Normal condition |
|---|---|---|---|---|
| 11 | APS | Ignition switch: ON<br>Engine: Stopped<br>Selector lever position: P | Accelerator pedal: Fully closed | 985 - 1085 mV |
| | | | Accelerator pedal: Depressed | Gradually increases from the above value. |
| | | | Accelerator pedal: Fully open | 4000 mV or higher |
| 15 | A/T fluid temperature sensor | Driving after engine has warmed up | Drive for 15 minutes or more until the ATF temperature reaches 70 - 80°C. | Gradually increases to 70 - 80°C. |
| 21 | Crank angle sensor <6G7><br>Engine speed sensor <4M4> | Engine: Idling<br>Selector lever position: P | Compare the engine speeds displayed on the tachometer and the MUT-II. | Identical |
| 22 | Input shaft speed sensor | Shift range: 4th | Driving at a constant speed of 50 km/h in 4th | 1300 - 1600 r/min |
| 23 | Output shaft speed sensor | Shift range: 4th | Driving at a constant speed of 50 km/h in 4th | 1300 - 1600 r/min |
| 25 | Wide open throttle switch | Accelerator pedal position | Released | OFF |
| | | | Depressed | ON |
| 26 | Stop lamp switch | Ignition switch: ON<br>Engine: Stopped | Brake pedal: Depressed | ON |
| | | | Brake pedal: Released | OFF |
| 29 | Vehicle speed sensor | Selector lever position: Sports mode | Idling in 1st (Vehicle stopped) | 0 km/h |
| | | | Driving at a constant speed of 50 km/h in 3rd | 50 km/h |

| 31 | LR solenoid valve duty ratio | Selector lever position: Sports mode | Data List No. | No. 31 | No. 32 | No. 33 | No. 34 | No.35 |
|---|---|---|---|---|---|---|---|---|
| 32 | UD solenoid valve duty ratio | | Driving at a constant speed in 1st | 0% | 0% | 100% | 100% | 0% |
| 33 | 2nd solenoid valve duty ratio | | Driving at a constant speed in 2nd | 100% | 0% | 0% | 100% | 0% |
| 34 | OD solenoid valve duty ratio | | Driving at a constant speed in 3rd | 100% | 0% | 100% | 0% | 0% |
| 35 | RED solenoid valve duty ratio | | Driving at a constant speed in 4th | 0% | 0% | 100% | 0% | 100% |
| | | | Driving at a constant speed in 5th | 100% | 100% | 0% | 0% | 100% |

Purchased from www.WorkshopManuals.co.uk

www.WorkshopManuals.co.uk

| Data list No. | Check item | Inspection conditions | | Normal condition |
|---|---|---|---|---|
| 36 | DCC solenoid valve duty ratio | Shift range: 2nd | Driving at 30 km/h in 2 range, then fully close accelerator. | 70% - 90% -to- 0% |
| | | | Driving at 50 km/h in 4th | 70% - 90% |
| 52 | Damper clutch slip amount | Shift range: 2nd | Driving at 30 km/h in 2 range, then fully close accelerator. | -300 - 100 r/min or 100 - 300 r/min |
| | | | Driving at a constant speed of 50 km/h in 4th | -10 - 10 r/min |
| 54 | Control relay output voltage | Ignition switch: OFF | Ignition switch: ON | 10 - 12 V |
| 61 | Inhibitor switch | Ignition switch: ON<br>Engine: Stopped | Selector lever position: P | P |
| | | | Selector lever position: R | R |
| | | | Selector lever position: N | N |
| | | | Selector lever position: D | D |
| 63 | Shift position | Selector lever position:<br>Sports mode | Driving at a constant speed of 10 km/h in 1st | 1st |
| | | | Driving at a constant speed of 30 km/h in 2nd | 2nd |
| | | | Driving at a constant speed of 50 km/h in 3rd | 3rd |
| | | | Driving at a constant speed of 50 km/h in 4th | 4th |
| | | | Driving at a constant speed of 70 km/h in 5th | 5th |
| 65 | Dual pressure switch | Engine: Idling | A/C switch: ON | ON |
| | | | A/C switch: OFF | OFF |
| 66 | OD-OFF signal <Vehicles with auto-cruise control system> | While auto-cruise control is operating | While driving on a level road | OFF |
| | | | While climbing an incline | ON |

Purchased from www.WorkshopManuals.co.uk

www.WorkshopManuals.co.uk

| Data list No. | Check item | Inspection conditions | | Normal condition | | |
|---|---|---|---|---|---|---|
| 67 | Select switch | Ignition switch: ON<br>Engine: Stopped | (Data List No. ) | No. 67 | No. 68 | No. 69 |
| | | | Selector lever position: D | OFF | OFF | OFF |
| 68 | Upshift switch | | Selector lever operation: Sports mode selected | ON | OFF | OFF |
| 69 | Downshift switch | | Selector lever operation: Lever moved to upshift position and held | ON | ON | OFF |
| | | | Selector lever operation: Lever moved to downshift position and held | ON | OFF | ON |
| 73 | Target effective engine pressure <6G7> | Engine: Idling<br>Selector lever position: N | Accelerator pedal: fully closed to depressed | Data changes. | | |
| 75 | 4LLc switch | Ignition switch: ON<br>Engine: Stopped | Transfer lever position: 4LLc | ON | | |
| | | | Transfer lever position:<br>Other than the above | OFF | | |
| 76 | Theoretical effective engine pressure <4M4> | Engine: Idling<br>Selector lever position: N | Accelerator pedal: fully closed to depressed | Data changes. | | |

## ACTUATOR TEST TABLE

| Item No. | Check item | Test contents | Inspection conditions | Normal condition |
|---|---|---|---|---|
| 1 | LR solenoid valve | The solenoid valve specified by the MUT-II is driven at 50% duty for 5 seconds. No other solenoid valves are energised. | Ignition switch: ON<br>Selector lever position: P<br>Engine: Stopped<br>Throttle (accelerator)<br>Opening angle voltage: Less than 1 V <6G7>,<br>less than 1.2 V <4M4><br>The fail-safe function should not be operating. | The sound of operation should be heard when the solenoid valve is driven. |
| 2 | UD solenoid valve | | | |
| 3 | 2nd solenoid valve | | | |
| 4 | OD solenoid valve | | | |
| 5 | RED solenoid valve | | | |
| 6 | DCC solenoid valve | | | |
| 7 | 1st shift indicator lamp | The indicator lamp for the shift stage specified by the MUT-II illuminates for 3 seconds. | | The shift indicator lamp illuminates. |
| 8 | 2nd shift indicator lamp | | | |
| 9 | 3rd shift indicator lamp | | | |
| 10 | 4th shift indicator lamp | | | |
| 11 | 5th shift indicator lamp | | | |
| 12 | A/T control relay | The A/T control relay turns off for 3 seconds. | | Data List No. 54<br>(1) During test: 0 V<br>(2) Normal: System voltage (V) |

Purchased from www.WorkshopManuals.co.uk

www.WorkshopManuals.co.uk

## INVECS-II CANCEL COMMAND

| Item No. | Item | Contents | NOTE |
|---|---|---|---|
| 14 | INVECS-II | Stops the INVECS-II control and changes gear according to the standard shift pattern. | Use this procedure when carrying out road test procedure 7. This function cancels the stopping of INVECS-II control when the ignition switch is turned OFF and then back ON. |

## A/T-ECU TERMINAL VOLTAGE TABLE

**<6G7>**

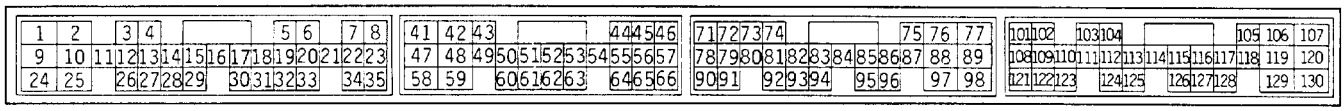

9FA0253

| Terminal No. | Check item | Inspection conditions | Standard value |
|---|---|---|---|
| 50 | A/T control relay | Ignition switch: OFF | 0 V |
| | | Ignition switch: ON | 10 - 12 V |
| 76 | Earth | At all times | 0 V |
| 77 | Solenoid valve power supply | Ignition switch: OFF | 0 V |
| | | Ignition switch: ON | System voltage |
| 81 | Sensor earth | At all times | 0 V |
| 88 | Earth | At all times | 0 V |
| 89 | Solenoid valve power supply | Ignition switch: OFF | 0 V |
| | | Ignition switch: ON | System voltage |
| 97 | Earth | At all times | 0 V |
| 101 | Inhibitor switch P | Ignition switch: ON<br>Selector lever position: P | System voltage |
| | | Ignition switch: ON<br>Selector lever position: Other than the above | 0 V |
| 102 | Inhibitor switch D | Ignition switch: ON<br>Selector lever: D | System voltage |
| | | Ignition switch: ON<br>Selector lever position: Other than the above | 0 V |
| 103 | Input shaft speed sensor | Measure between terminals (57) and (103) using an oscilloscope.<br>Engine: 2 000 r/min<br>Shift range: 4th | Check Procedure Using an Oscilloscope (Refer to P.23-69.) |
| 104 | Output shaft speed sensor | Measure between terminals (57) and (104) using an oscilloscope.<br>Engine: 2 000 r/min<br>Shift range: 4th | Check Procedure Using an Oscilloscope (Refer to P.23-69.) |
| 105 | 1st shift indicator lamp | Shift range: 1st | System voltage |
| | | Shift range: Other than the above | 0 V |

Purchased from www.WorkshopManuals.co.uk

www.WorkshopManuals.co.uk

| Terminal No. | Check item | Inspection conditions | Standard value |
|---|---|---|---|
| 106 | 2nd solenoid valve | Engine: Idling<br>Shift range: 2nd | System voltage |
| | | Engine: Idling<br>Shift range: Park | 7–9 V |
| 107 | DCC solenoid valve | Engine: Idling<br>Shift range: 1st | System voltage |
| 108 | Inhibitor switch R | Engine: Idling<br>Selector lever position: R | System voltage |
| | | Engine: Idling<br>Shift range: Other than the above | 0 V |
| 109 | Select switch | Ignition switch: ON<br>Selector lever operation: Sports mode | System voltage |
| | | Ignition switch: ON<br>Selector lever operation: Other than the above | 0 V |
| 110 | Downshift switch | Ignition switch: ON<br>Selector lever operation: Downshifted in Sports mode and lever held | System voltage |
| | | Ignition switch: ON<br>Selector lever operation: Other than the above | 0 V |
| 112 | 4LLc switch | Ignition switch: ON<br>Transfer lever position: 4LLc | System voltage |
| | | Ignition switch: ON<br>Transfer lever position: Other than the above | 0 V |
| 115 | Wide open throttle switch | Accelerator pedal: Released | System voltage |
| | | Accelerator pedal: Depressed | 0 V |
| 117 | 3rd shift indicator lamp | Shift range: 3rd | System voltage |
| | | Shift range: Other than the above | 0 V |
| 118 | 2nd shift indicator lamp | Shift range: 2nd | System voltage |
| | | Shift range: Other than the above | 0 V |
| 119 | RED solenoid valve | Engine: Idling<br>Shift range: 5th | System voltage |
| | | Engine: Idling<br>Shift range: Park | 7 - 9 V |
| 120 | UD solenoid valve | Engine: Idling<br>Shift range: 1st | System voltage |
| | | Engine: Idling<br>Shift range: Park | 7 - 9 V |
| 121 | Inhibitor switch N | Ignition switch: ON<br>Selector lever position: N | System voltage |
| | | Ignition switch: ON<br>Selector lever position: Other than the above | 0 V |
| 122 | Upshift switch | Ignition switch: ON<br>Selector lever operation: Upshifted in Sports mode and lever held | System voltage |
| | | Ignition switch: ON<br>Selector lever operation: Other than the above | 0 V |
| 123 | Stop lamp switch | Ignition switch: ON<br>Brake pedal Depressed | System voltage |
| | | Ignition switch: ON<br>Brake pedal Released | 0 V |

Purchased from www.WorkshopManuals.co.uk

www.WorkshopManuals.co.uk

| Terminal No. | Check item | Inspection conditions | Standard value |
|---|---|---|---|
| 124 | A/T fluid temperature sensor | ATF temperature: 20°C | 3.8 - 4.0 V |
| | | ATF temperature: 40°C | 3.2 - 3.4 V |
| | | ATF temperature: 80°C | 1.7 - 1.9 V |
| 127 | 5th shift indicator lamp | Shift range: 5th | System voltage |
| | | Shift range: Other than the above | 0 V |
| 128 | 4th shift indicator lamp | Shift range: 4th | System voltage |
| | | Shift range: Other than the above | 0 V |
| 129 | LR solenoid valve | Engine: Idling<br>Shift range: Park | System voltage |
| | | Engine: Idling<br>Shift range: 2nd | 7 - 9 V |
| 130 | OD solenoid valve | Engine: Idling<br>Shift range: 3rd | System voltage |
| | | Engine: Idling<br>Shift range: Park | 7 - 9 V |

**<4M4>**

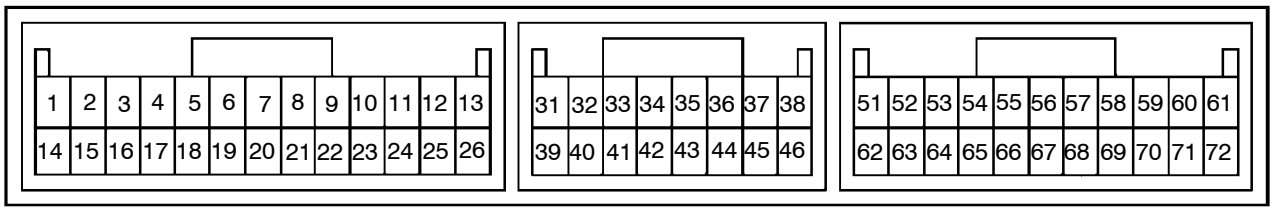


9FA0133

| Terminal No. | Check item | Inspection conditions | Standard value |
|---|---|---|---|
| 1 | UD solenoid valve | Engine: Idling<br>Shift range: 1st | System voltage |
| | | Engine: Idling<br>Shift range: Park | 7 - 9 V |
| 2 | Solenoid valve power supply | Ignition switch: OFF | 0 V |
| | | Ignition switch: ON | System voltage |
| 3 | Solenoid valve power supply | Ignition switch: OFF | 0 V |
| | | Ignition switch: ON | System voltage |
| 4 | 1st shift indicator lamp | Shift range: 1st | System voltage |
| | | Shift range: Other than the above | 0 V |
| 5 | 3rd shift indicator lamp | Shift range: 3rd | System voltage |
| | | Shift range: Other than the above | 0 V |
| 6 | 5th shift indicator lamp | Shift range: 5th | System voltage |
| | | Shift range: Other than the above | 0 V |
| 9 | 4LLc switch | Transfer lever: 4LLc | System voltage |
| | | Transfer lever: Other than the above | 0 V |

Purchased from www.WorkshopManuals.co.uk

www.WorkshopManuals.co.uk

| Terminal No. | Check item | Inspection conditions | Standard value |
|---|---|---|---|
| 10 | A/C compressor load signal | A/C switch: OFF | 0 V |
| | | A/C switch: ON | System voltage |
| 11 | Power supply | Ignition switch: OFF | 0 V |
| | | Ignition switch: ON | System voltage |
| 12 | Earth | At all times | 0 V |
| 13 | Earth | At all times | 0 V |
| 14 | OD solenoid valve | Engine: Idling<br>Shift range: 3rd | System voltage |
| | | Engine: Idling<br>Shift range: Park | 7 - 9 V |
| 15 | DCC solenoid valve | Engine: Idling<br>Shift range: 1st | System voltage |
| 16 | 2nd solenoid valve | Engine: Idling<br>Shift range: 2nd | System voltage |
| | | Engine: Idling<br>Shift range: Park | 7 - 9 V |
| 17 | 2nd shift indicator lamp | Shift range: 2nd | System voltage |
| | | Shift range: Other than the above | 0 V |
| 18 | 4th shift indicator lamp | Shift range: 4th | System voltage |
| | | Shift range: Other than the above | 0 V |
| 24 | Power supply | Ignition switch: OFF | 0 V |
| | | Ignition switch: ON | System voltage |
| 25 | Earth | At all times | 0 V |
| 26 | Earth | At all times | 0 V |
| 31 | Input shaft speed sensor | Measure between terminals (31) and (43) using an oscilloscope.<br>Engine: 2 000 r/min<br>Shift range: 4th | Check Procedure using an Oscilloscope (Refer to P.23-69.) |
| 32 | Output shaft speed sensor | Measure between terminals (32) and (43) using an oscilloscope.<br>Engine: 2 000 r/min<br>Shift range: 4th | Check Procedure using an Oscilloscope (Refer to P.23-69.) |
| 33 | Engine speed sensor | Engine: Idling | 2.0 - 2.4 V |
| 38 | Backup power supply | At all times | System voltage |
| 43 | Sensor earth | At all times | 0 V |
| 44 | A/T fluid temperature sensor | A/T fluid temperature 20°C | 3.8 - 4.0 V |
| | | A/T fluid temperature 40°C | 3.2 - 3.4 V |
| | | A/T fluid temperature 80°C | 1.7 - 1.9 V |
| 45 | Accelerator pedal position sensor (APS) | Accelerator pedal: Fully closed (engine stopped) | 0.985 - 1.085 V |
| | | Accelerator pedal: Fully open (engine stopped) | 4.0 V or higher |
| 51 | RED solenoid valve | Engine: Idling<br>Shift range: 5th | System voltage |
| | | Engine: Idling<br>Shift range: Park | 7 - 9 V |
| 53 | Output communication with engine-ECU | Engine: Idling<br>Selector lever position: D | Other than 0 V |

Purchased from www.WorkshopManuals.co.uk

www.WorkshopManuals.co.uk

| Terminal No. | Check item | Inspection conditions | Standard value |
|---|---|---|---|
| 54 | Input communication with engine-ECU | Engine: Idling<br>Selector lever position: D | Other than 0 V |
| 55 | Inhibitor switch P | Ignition switch: ON<br>Selector lever position: P | System voltage |
| | | Ignition switch: ON<br>Selector lever position: Other than the above | 0 V |
| 56 | Inhibitor switch N | Ignition switch: ON<br>Selector lever position: N | System voltage |
| | | Ignition switch: ON<br>Selector lever position: Other than the above | 0 V |
| 57 | Select switch | Ignition switch: ON<br>Selector lever operation: Sports mode | System voltage |
| | | Ignition switch: ON<br>Selector lever operation: Other than the above | 0 V |
| 58 | Downshift switch | Ignition switch: ON<br>Selector lever position: Downshifted in Sports mode and lever held | System voltage |
| | | Ignition switch: ON<br>Selector lever operation: Other than the above | 0 V |
| 59 | Stop lamp switch | Ignition switch: ON<br>Brake pedal Depressed | System voltage |
| | | Ignition switch: ON<br>Brake pedal Released | 0 V |
| 62 | DIR solenoid valve | Engine: Idling<br>Shift range: Park | System voltage |
| | | Engine: Idling<br>Shift range: 2nd | 7 - 9 V |
| 65 | Wide open throttle switch | Accelerator pedal: Released | 4.5 - 5.5 V |
| | | Accelerator pedal: Depressed | Less than 0.4 V |
| 66 | Inhibitor switch R | Ignition switch: ON<br>Selector lever position: R | System voltage |
| | | Ignition switch: ON<br>Selector lever position: Other than the above | 0 V |
| 67 | Inhibitor switch D | Ignition switch: ON<br>Selector lever position: D | System voltage |
| | | Ignition switch: ON<br>Selector lever position: Other than the above | 0 V |
| 68 | Upshift switch | Ignition switch: ON<br>Selector lever position: Upshifted in Sports mode and lever held | System voltage |
| | | Ignition switch: ON<br>Selector lever position: Other than the above | 0 V |
| 69 | Vehicle speed sensor | When stopped | 0 V |
| | | When starting to drive forward slowly. | 0 V and 5 V alternates |
| 71 | A/T control relay | Ignition switch: OFF | 0 V |
| | | Ignition switch: ON | 10 - 12 V |
| 72 | Earth | Ignition switch: ON | 0 V |

Purchased from www.WorkshopManuals.co.uk

www.WorkshopManuals.co.uk

## CHECK PROCEDURE USING AN OSCILLOSCOPE

| Check item | Inspection conditions | | Normal condition (Wave pattern sample) |
|---|---|---|---|
| Crank angle sensor | Selector lever position: N | Idling (vehicle stopped) | Wave pattern A |
| Input shaft speed sensor | Shift range: 4th | Driving at a constant speed of 50 km/h in 4th (Engine: 1 800 - 2 100 r/min) | Wave pattern B |
| Output shaft speed sensor | | | |
| Vehicle speed sensor | | | |
| LR solenoid valve | Ignition switch: ON<br>Engine: Stopped<br>Selector lever position: P<br>Throttle (accelerator) opening angle voltage:<br>Less than 1 V <6G7>, less than 1.2 V <4M4> | Force-drive the solenoid valves (actuator test). | Wave pattern C |
| UD solenoid valve | | | |
| 2nd solenoid valve | | | |
| OD solenoid valve | | | |
| RED solenoid valve | | | |
| DCC solenoid valve | | | |

### Wave pattern sample

| Wave pattern A | Wave pattern B | Wave pattern C |
|---|---|---|
| 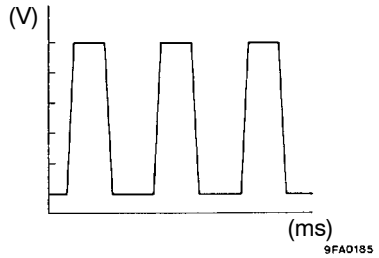 | 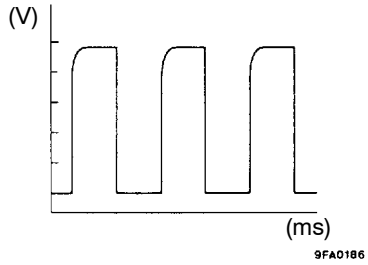 | 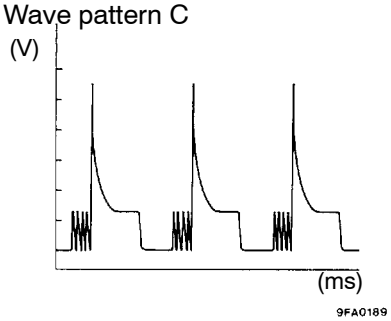 |







Purchased from www.WorkshopManuals.co.uk

www.WorkshopManuals.co.uk

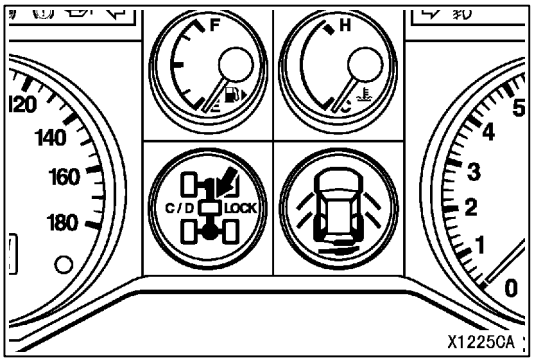


# TROUBLESHOOTING <SS4 II>

## DIAGNOSIS FUNCTION

### CENTER DIFFERENTIAL LOCK LAMP

When a problem occurs in the transfer system, the center differential lock lamp flashes at a rate of 1 Hz.
When the center differential lock lamp is flashing at a rate of 1 Hz, check the diagnosis output.

### READING DIAGNOSIS CODES

Use the MUT-II or the center differential lock lamp to read the diagnosis codes. (Refer to GROUP 00 - Guide to Troubleshooting and Inspection Procedures.)

## CHART CLASSIFIED BY DIAGNOSIS CODE

| Diagnosis code | Diagnosis item | | Reference page |
|---|---|---|---|
| 11 | Power supply voltage system | Voltage drop | 23-72 |
| 12 | | Overvoltage | 23-72 |
| 13 | Main relay system (inside ECU) | Relay problem | 23-72 |
| 21 | Accelerator pedal position sensor (APS) system | Open circuit/Malfunction of sensor | 23-73 |
| 22 | Front propeller shaft speed sensor system | Open circuit/Short-circuit/Malfunction of sensor | 23-75 |
| 23 | | | |
| 24 | Rear propeller shaft speed sensor system | Open circuit/Short-circuit/Malfunction of sensor | 23-77 |
| 25 | | | |
| 26 | Stop lamp switch system | Open circuit/Short-circuit/Malfunction of lamp/Malfunction of switch | 23-79 |
| 31 | Transfer shift lever switch system | Open circuit/Short-circuit/Malfunction of switch | 23-80 |
| 32 | Transfer position switch system | Malfunction of transfer shift mechanism/Malfunction of actuator | 23-81 |
| 33 | Transfer position switch system | Open circuit/Short-circuit/Malfunction of switch | 23-81 |
| 34 | Freewheel engage solenoid valve system | Open circuit/Short-circuit/Malfunction of solenoid valve | 23-82 |

Purchased from www.WorkshopManuals.co.uk

www.WorkshopManuals.co.uk

| Diagnosis code | Diagnosis item | | Reference page |
|---|---|---|---|
| 35 | Freewheel engage switch system | Open circuit/Short-circuit/Malfunction of switch | 23-83 |
| 41 | Shift actuator (short-circuit/open circuit) system | Open circuit/Short-circuit/Malfunction of actuator/Malfunction of ECU | 23-84 |
| 42 | Shift actuator (short-circuit) system | Short-circuit/Malfunction of actuator/Malfunction of ECU | 23-85 |
| 43 | Shift actuator (open circuit) system | Open circuit/Malfunction of actuator/Malfunction of ECU | |
| 44 | Shift actuator (overload) system | Malfunction of transfer shift mechanism/Malfunction of actuator | 23-86 |
| 45 | Tyre problem | Incorrect tyre pressure/Uneven tyre sizes | 23-86 |
| 51 | Malfunction of transfer-ECU | | 23-86 |

Purchased from www.WorkshopManuals.co.uk

www.WorkshopManuals.co.uk

## INSPECTION PROCEDURES CLASSIFIED BY DIAGNOSIS CODE

| Code No. 11, 12 Power supply voltage system | Probable cause |
|---|---|
| Code No. 11 is output to indicate a drop in voltage if the power supply voltage drops below 9.5 V.<br>Code No. 12 is output to indicate overvoltage if the power supply voltage rises above 18 V. | • Malfunction of ignition switch<br>• Malfunction of harness or connector<br>• Malfunction of transfer-ECU |

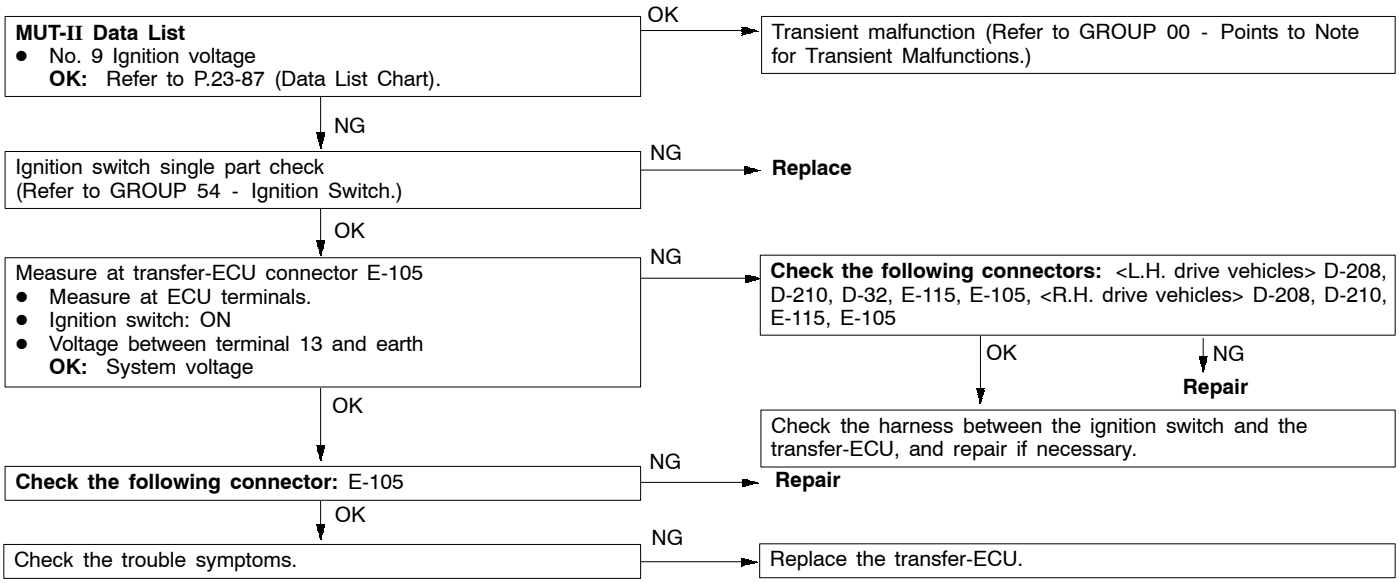


| Code No. 13 Main relay (inside ECU) system | Probable cause |
|---|---|
| Code No. 13 is output to indicate a relay malfunction if the voltage rises to 6 V or higher when the relay is off, or if it drops below 6 V when the relay is on. | • Malfunction of transfer-ECU |

Replace the transfer-ECU.

Purchased from www.WorkshopManuals.co.uk

www.WorkshopManuals.co.uk

| Code No. 21 Accelerator pedal position sensor (APS) system | Probable cause |
|---|---|
| Code No. 21 is output to indicate an open circuit in the APS or an incorrect adjustment when the APS output voltage drops below 0.2 V while the engine is idling. | • Malfunction of APS<br>• Malfunction of harness or connector<br>• Malfunction of transfer-ECU<br>• Malfunction of throttle valve controller <6G7><br>• Malfunction of engine-ECU <4M4> |

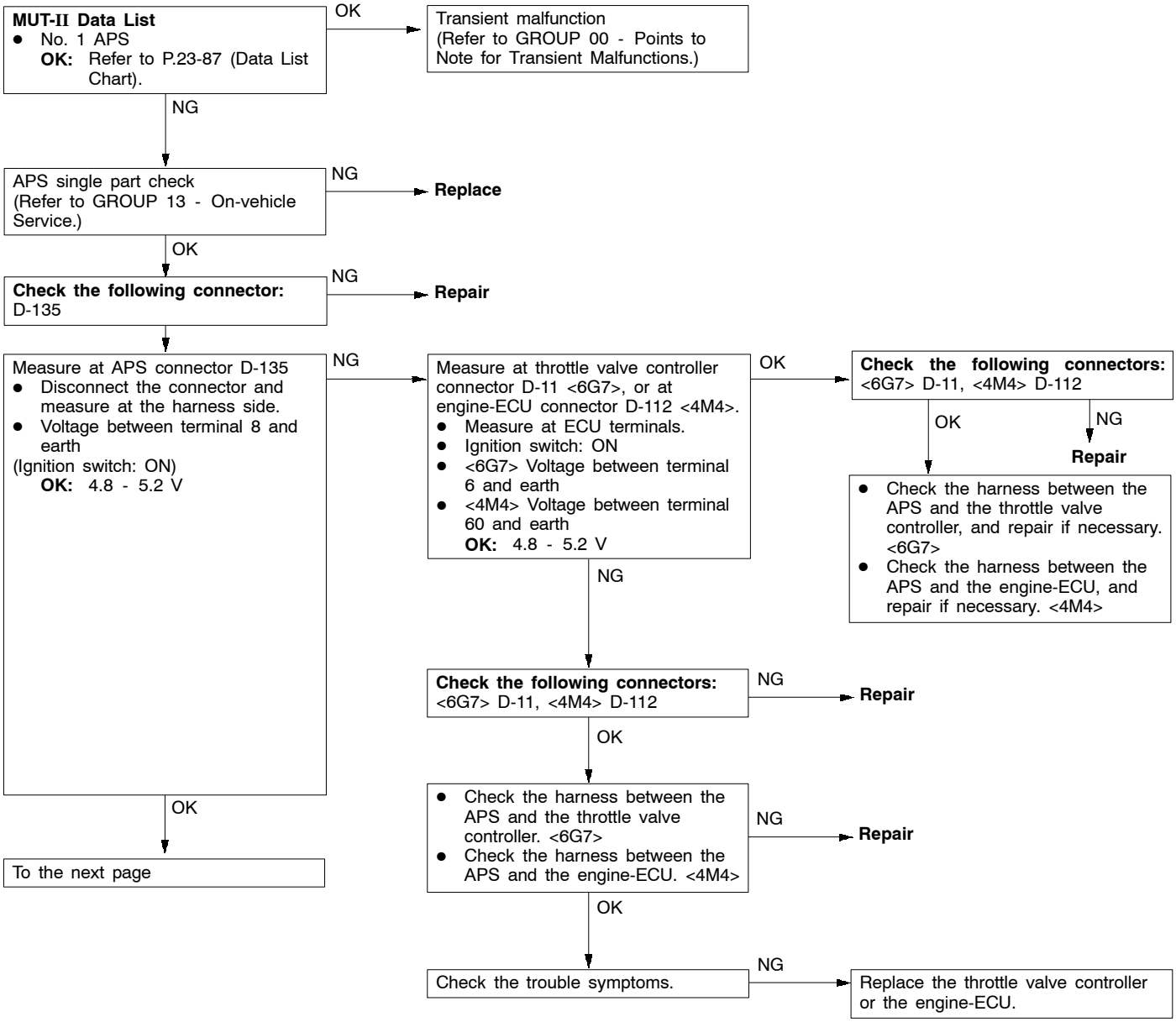


Purchased from www.WorkshopManuals.co.uk

www.WorkshopManuals.co.uk

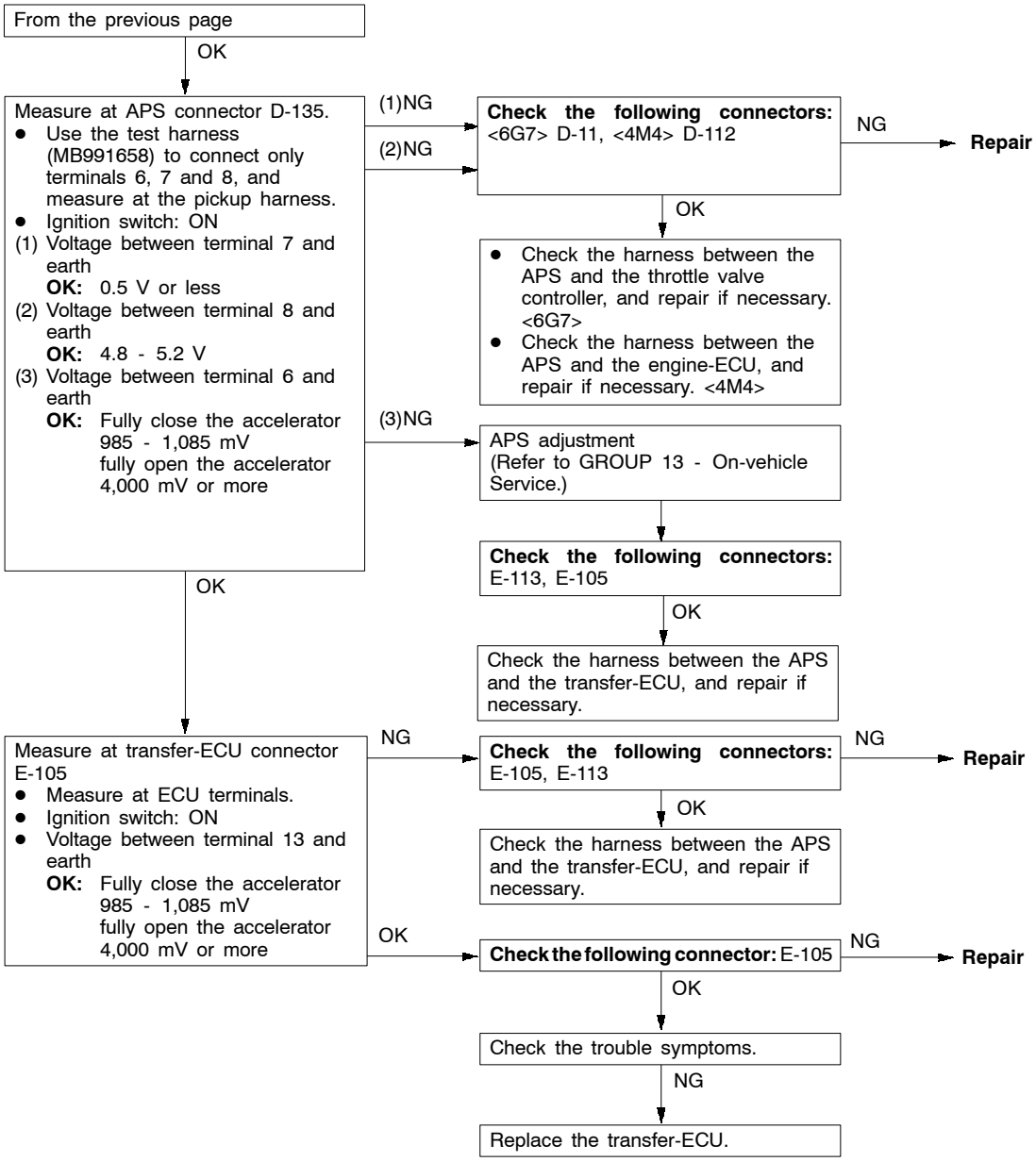


Purchased from www.WorkshopManuals.co.uk

www.WorkshopManuals.co.uk

| Code No. 22, 23 Front propeller shaft speed sensor system | Probable cause |
|---|---|
| Code No. 22 is output to indicate an open circuit or short-circuit in the front propeller shaft speed sensor if no signal is input from the front propeller shaft speed sensor when shifting from 2WD to 4WD while driving at medium to low speeds.<br>Code No. 23 is output to indicate an open circuit or short-circuit in the front propeller shaft speed sensor if the signal input from the front propeller shaft speed sensor is unstable when the freewheel engage switch is on. | • Malfunction of front propeller shaft speed sensor<br>• Malfunction of harness or connector<br>• Malfunction of transfer-ECU |

**MUT-II Data List**
- No. 2 Front propeller shaft speed sensor
  **OK:** Refer to P.23-87 (Data List Chart).

OK → Transient malfunction (Refer to GROUP 00 - Points to Note for Transient Malfunctions.)

NG ↓

Measure at transfer-ECU connector E-105
- Measure at ECU terminals.
- Ignition switch: ON
- Voltage between terminals 18 and earth
  **OK:** 0.5 V or less

NG → **Check the following connector:** E-105
- OK ↓
- NG → **Repair**

Check the trouble symptoms.
- NG ↓

Replace the transfer-ECU.

OK ↓

Measure at transfer-ECU connector E-105
- Measure at ECU terminals.
- Disconnect front propeller shaft speed sensor connector C-17.
- Ignition switch: ON
- Voltage between terminals 7 and earth
  **OK:** 4.8 - 5.2 V

NG → **Check the following connector:** C-17
- OK ↓
- NG → **Repair**

Check the harness between the front propeller shaft speed sensor and the transfer-ECU.
- OK ↓
- NG → **Repair**

Check the trouble symptoms.
- NG ↓

Replace the transfer-ECU.

OK ↓

Measure the front propeller shaft speed sensor output wave pattern at transfer-ECU connector E-105 (using an oscilloscope).
- Vehicle speed: approx. 50 km/h
- Shift range: 3rd
- Voltage between terminals 7 - 18
  **OK:** A wave pattern such as the one shown on P.23-69 (Check Procedure Using an Oscilloscope<Wave pattern B>) should be output, and the maximum value should be 4.8 V or more and the minimum value should be 0.8 V or less.
  There should be no noise in the output wave pattern.

OK → **Check the following connector:** E-105
- OK ↓
- NG → **Repair**

Check the trouble symptoms.
- NG ↓

Replace the transfer-ECU.

OK ↓

**Check the following connectors:** C-17, E-105
- NG → **Repair**
- OK ↓

To the next page

Purchased from www.WorkshopManuals.co.uk

www.WorkshopManuals.co.uk

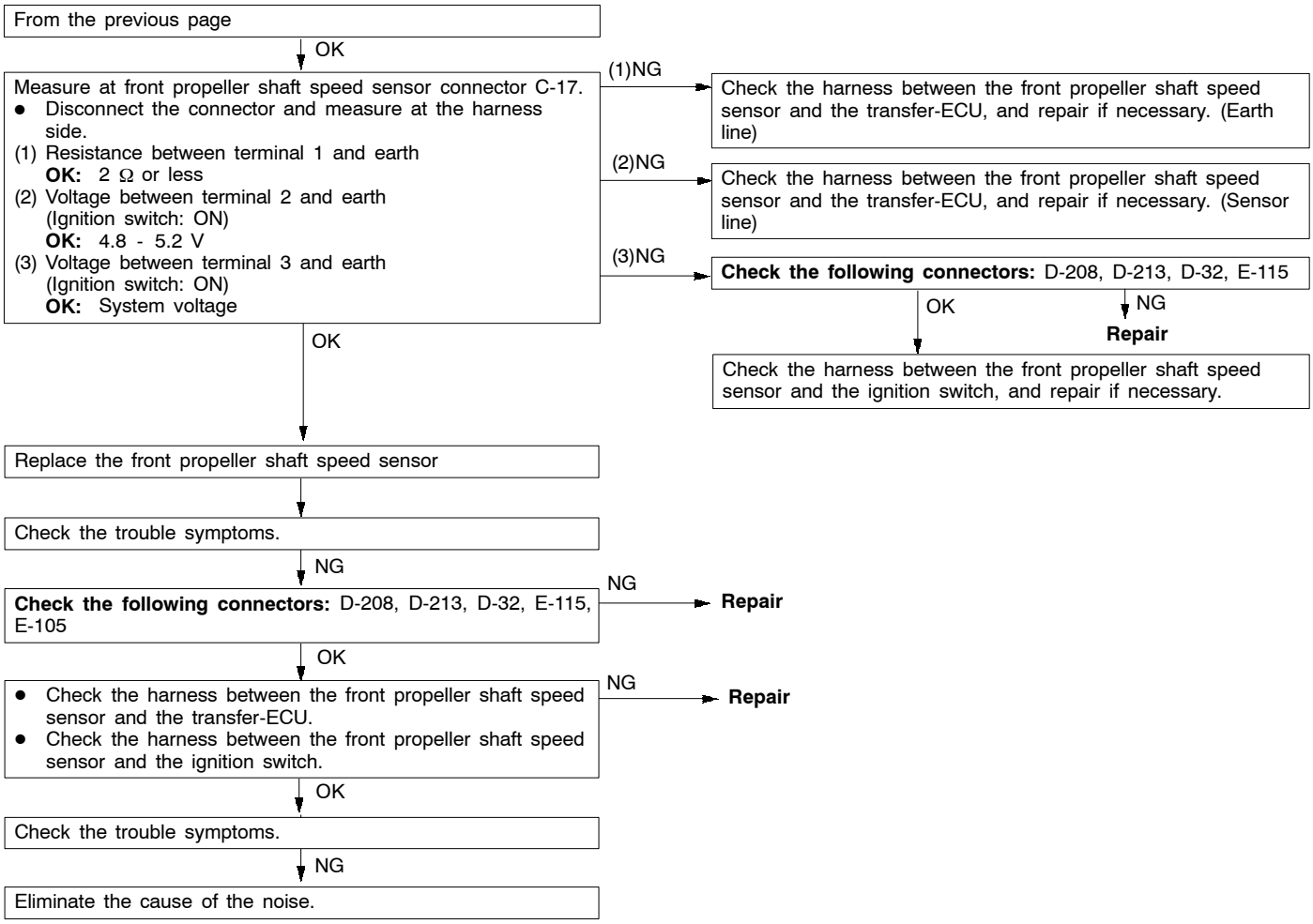


Purchased from www.WorkshopManuals.co.uk

www.WorkshopManuals.co.uk

| Code No. 24, 25 Rear propeller shaft speed sensor system | Probable cause |
|---|---|
| Code No. 24 is output to indicate an open circuit or short-circuit in the rear propeller shaft speed sensor if the signal input from the rear propeller shaft speed sensor is unstable when the APS voltage is 1.5 V or higher.<br>Code No. 25 is output to indicate an open circuit or short-circuit in the rear propeller shaft speed sensor if the signal input from the rear propeller shaft speed sensor is unstable when the freewheel engage switch is on. | • No. 3 Rear propeller shaft speed sensor<br>• Malfunction of harness or connector<br>• Malfunction of transfer-ECU |

**MUT-II Data List**
- No. 3 Rear propeller shaft speed sensor
  **OK:** Refer to P.23-87 (Data List Chart).

OK → Transient malfunction (Refer to GROUP 00 - Points to Note for Transient Malfunctions.)

NG ↓

Measure at transfer-ECU connector E-105
- Measure at ECU terminals.
- Ignition switch: ON
- Voltage between terminals 18 and earth
  **OK:** 0.5 V or less

NG → **Check the following connector:** E-105
- OK → Check the trouble symptoms.
  - NG → Replace the transfer-ECU.
- NG → **Repair**

OK ↓

Measure at transfer-ECU connector E-105
- Measure at ECU terminals.
- Disconnect rear propeller shaft speed sensor connector C-08.
- Ignition switch: ON
- Voltage between terminals 9 and earth
  **OK:** 4.8 - 5.2 V

NG → **Check the following connector:** C-08
- OK → Check the harness between the rear propeller shaft speed sensor and the transfer-ECU.
  - OK → Check the trouble symptoms.
    - NG → Replace the transfer-ECU.
  - NG → **Repair**
- NG → **Repair**

OK ↓

Measure the rear propeller shaft speed sensor output wave pattern at transfer-ECU connector E-105 (using an oscilloscope).
- Vehicle speed: approx. 50 km/h
- Shift range: 3rd
- Voltage between terminals 9 - 18
  **OK:** A wave pattern such as the one shown on P.23-69 (Check Procedure Using an Oscilloscope) should be output, and the maximum value should be 4.8 V or more and the minimum value should be 0.8 V or less.
  There should be no noise in the output wave pattern.

OK → **Check the following connector:** E-108
- OK → Check the trouble symptoms.
  - NG → Replace the transfer-ECU.
- NG → **Repair**

OK ↓

**Check the following connectors:** C-08, E-108

NG → **Repair**

OK ↓

To the next page

Purchased from www.WorkshopManuals.co.uk

www.WorkshopManuals.co.uk

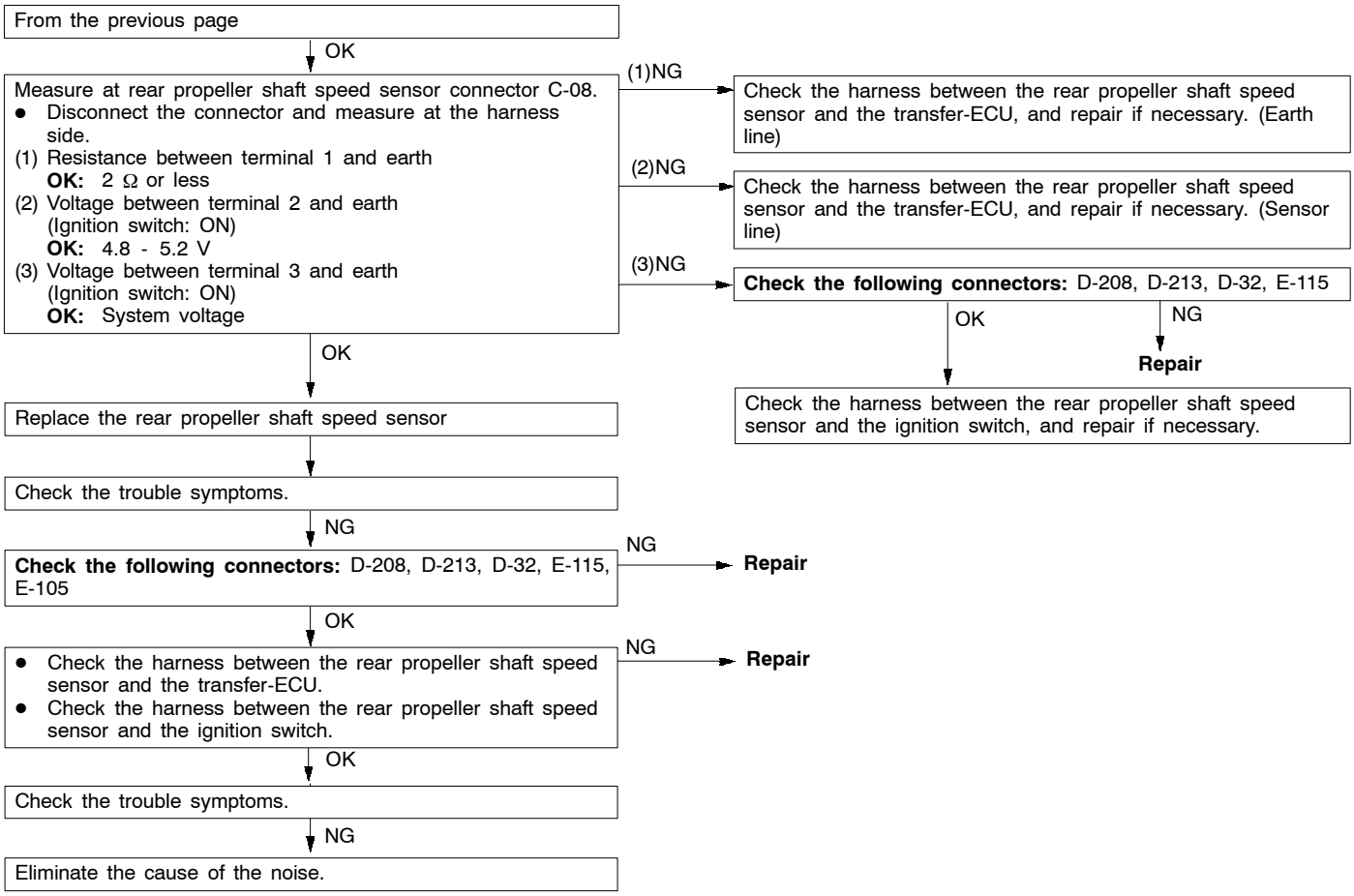


Purchased from www.WorkshopManuals.co.uk

www.WorkshopManuals.co.uk

| Code No. 26 Stop lamp switch system | Probable cause |
|---|---|
| Code No. 26 is output to indicate a short-circuit in the stop lamp switch when the stop lamp switch is continuously on for 15 minutes or more when the vehicle speed is 15 km/h or higher. | • Malfunction of brake pedal<br>• Malfunction of stop lamp switch<br>• Malfunction of harness or connector<br>• Malfunction of transfer-ECU |

Brake pedal height check
(Refer to GROUP 35 - Brake Pedal.)
- NG → **Adjust**
- OK ↓

**MUT-II Data List**
- No. 23 Stop lamp switch system
  **OK:** ON when brake pedal is depressed
  OFF when the brake pedal is released
- OK → Transient malfunction (Refer to GROUP 00 - Points to Note for Transient Malfunctions.)
- NG ↓

Stop lamp switch check
(Refer to GROUP 35 - Brake Pedal.)
- NG → **Replace**
- OK ↓

**Check the following connector:** D-136
- NG → **Repair**
- OK ↓

Measure at stop lamp switch connector D-136.
- Disconnect the connector and measure at the harness side.
- Voltage between terminals 2 and earth
  **OK:** System voltage
- NG → **Check the following connectors:** <L.H. drive vehicles> D-27, D-26, <R.H. drive vehicles> D-27, D-124
  - OK → Check the harness between the stop lamp switch and the battery, and repair if necessary.
  - NG → **Repair**
- OK ↓

Measure at transfer-ECU connector E-108
- Measure at ECU terminals.
- Voltage between terminals 34 and earth
  **OK:** System voltage when brake pedal is depressed
  1 V or less when brake pedal is released
- NG → **Check the following connectors:** <L.H. drive vehicles> D-27, D-26, D-33, E-105, E-108, <R.H. drive vehicles> D-124, E-115, E-108, D-27
  - OK → Check the harness between the stop lamp switch and the transfer-ECU, and repair if necessary.
    Check the harness between the stop lamp switch and the battery, and repair if necessary.
  - NG → **Repair**
- OK ↓

**Check the following connector:** E-108
- NG → **Repair**
- OK ↓

Check the trouble symptoms.
- NG → Replace the transfer-ECU.

Purchased from www.WorkshopManuals.co.uk

www.WorkshopManuals.co.uk

| Code No. 31 Transfer lever switch system | Probable cause |
|---|---|
| Code No. 31 is output to indicate an open circuit or short-circuit in the transfer lever switch if the input signal from the transfer lever switch is unstable. | • Malfunction of transfer lever switch<br>• Malfunction of harness or connector<br>• Malfunction of transfer-ECU |

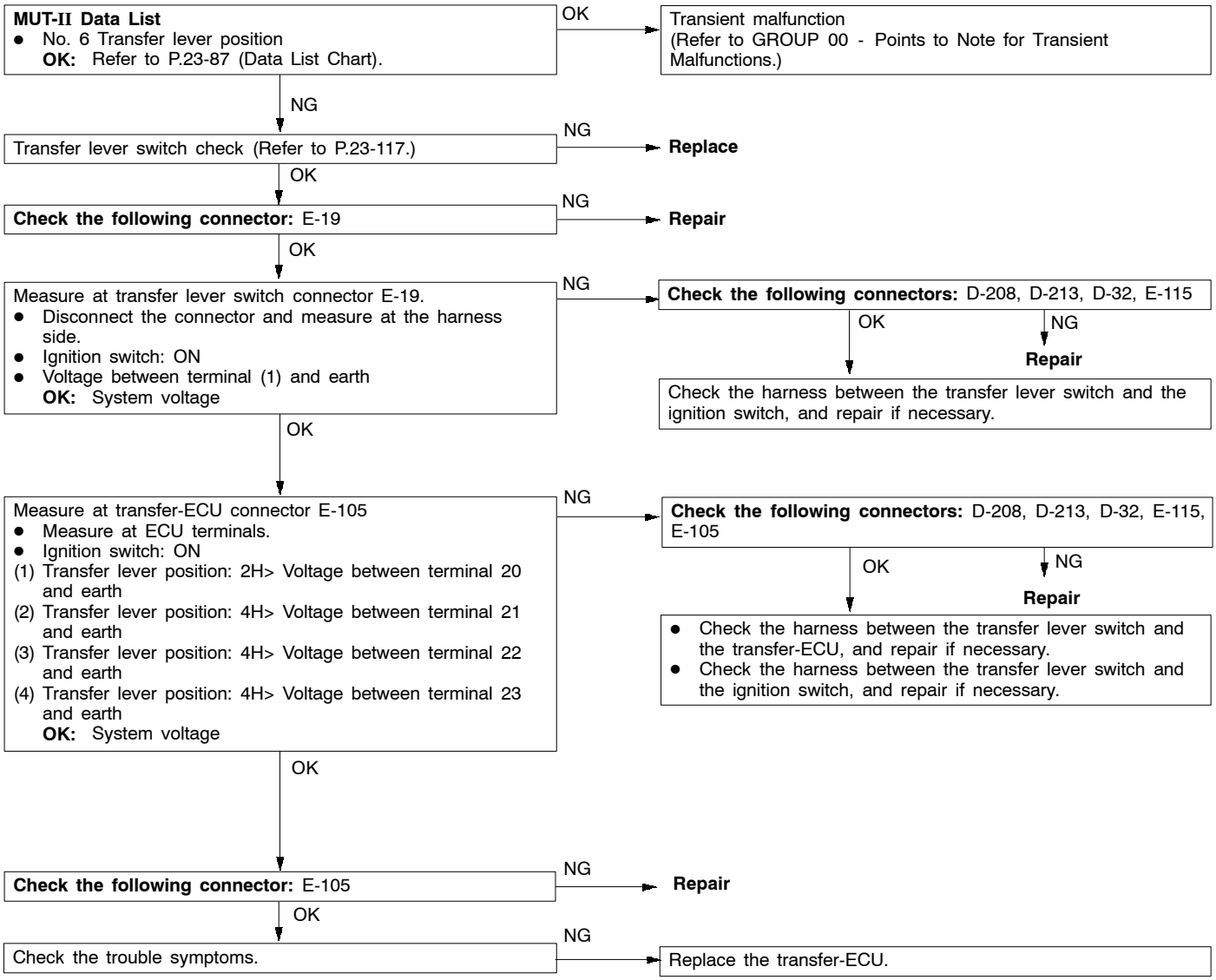


Purchased from www.WorkshopManuals.co.uk

www.WorkshopManuals.co.uk

| Code No. 32, 33 Transfer position switch system | Probable cause |
|---|---|
| Code No. 32 is output to indicate an open circuit or short-circuit in a transfer position switch, a malfunction of the shift actuator or a malfunction of the transfer shift mechanism when transfer selection does not complete while driving. Code No. 33 is output to indicate an open circuit or short-circuit in a transfer position switch if the input signal from the transfer position switch is unstable. | • Malfunction of transfer position switch<br>• Malfunction of harness or connector<br>• Malfunction of transfer-ECU<br>• Malfunction of shift actuator<br>• Malfunction of transfer shift mechanism |

★ Refer to the Transmission Workshop Manual.

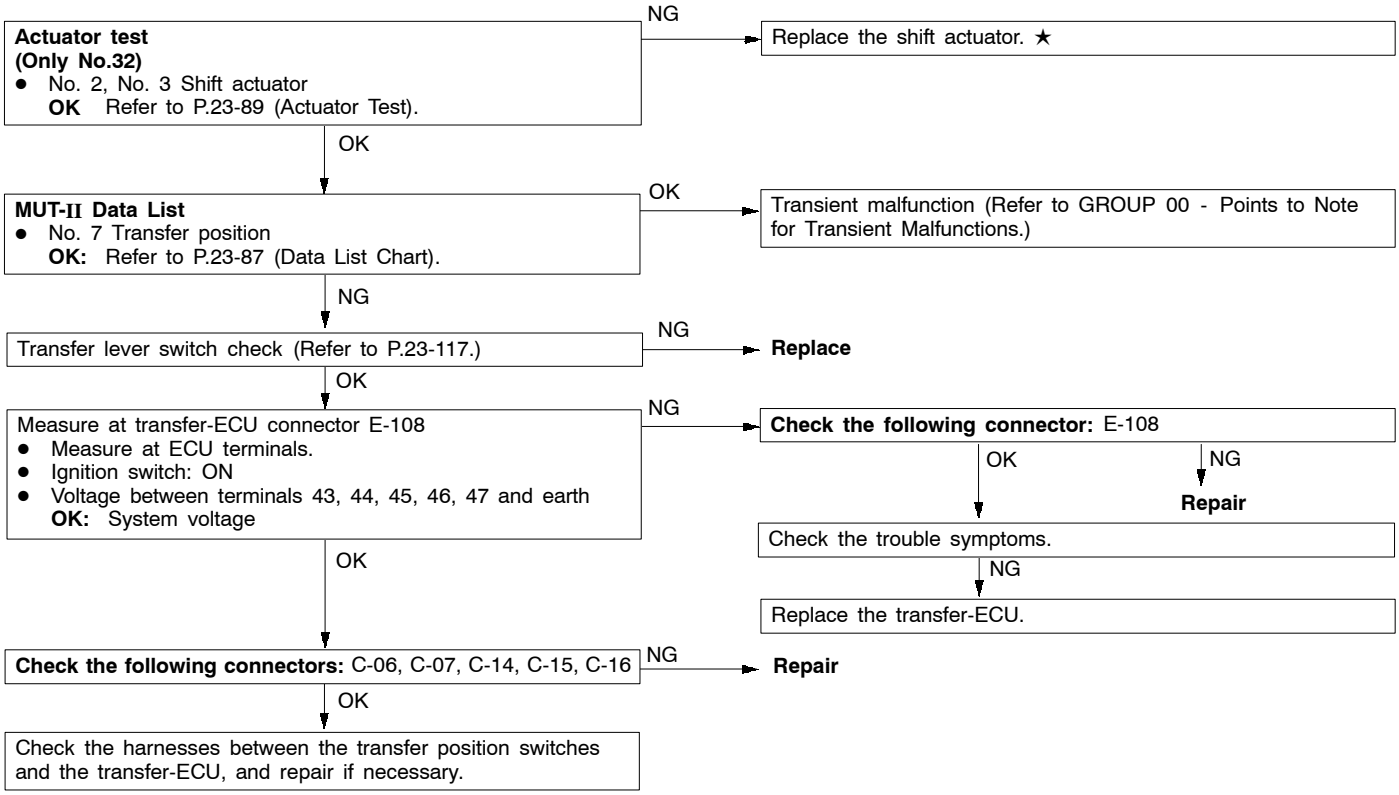


Purchased from www.WorkshopManuals.co.uk

www.WorkshopManuals.co.uk

| Code No. 34 Freewheel engage solenoid valve system | Probable cause |
|---|---|
| Code No. 34 is output to indicate an open circuit or short-circuit in the freewheel engage solenoid valve when the transfer-ECU terminal voltages are not the same while current is being supplied to the freewheel engage solenoid valve. | • Malfunction of freewheel engage solenoid valve<br>• Malfunction of harness or connector<br>• Malfunction of transfer-ECU |

**MUT-II Actuator Test**
- No. 1 Freewheel engage solenoid valve
  **OK:** The solenoid valve operates for 5 seconds.

OK → Transient malfunction (Refer to GROUP 00 - Points to Note for Transient Malfunctions.)

NG ↓

Freewheel engage solenoid valve check
(Refer to GROUP 26 - On-Vehicle Service.)

NG → **Replace**

OK ↓

**Check the following connectors:** A-40, A-41

NG → **Repair**

OK ↓

Measure at freewheel engage solenoid valve connectors A-40 and A-41.
- Disconnect the connector and measure at the harness side.
- Ignition switch: ON
- Voltage between terminal 1 and earth
  **OK:** System voltage

NG → **Check the following connectors:** D-208, D-210, D-27, A-15

OK → Check the harness between the freewheel engage solenoid valve and the ignition switch, and repair if necessary.

NG → **Repair**

OK ↓

Measure at transfer-ECU connector E-108
- Measure at ECU terminals.
- Transfer: 4WD
- Ignition switch: ON
- Voltage between terminals 41 and earth
  **OK:** System voltage

→ **Check the following connectors:** <L.H. drive vehicles> D-208, D-210, D-27, A-15, A-16, A-04, E-113, E-108, <R.H. drive vehicles> D-208, D-210, D-27, A-15, A-16, D-143, E-113, E-108,

OK → Check the harness between the freewheel engage solenoid valve and the transfer-ECU, and repair if necessary.
Check the harness between the freewheel engage solenoid valve and the ignition switch, and repair if necessary.

NG → **Repair**

OK ↓

**Check the following connector:** E-108

NG → **Repair**

OK ↓

Check the trouble symptoms.

NG → Replace the transfer-ECU.

Purchased from www.WorkshopManuals.co.uk

www.WorkshopManuals.co.uk

| Code No. 35 Freewheel engage switch system | Probable cause |
|---|---|
| Code No. 35 is output to indicate an open circuit or short-circuit in the freewheel engage switch when the freewheel engage switch condition does not correspond to the fact that current is being supplied to the freewheel engage solenoid valve. | • Malfunction of freewheel engage switch<br>• Malfunction of harness or connector<br>• Malfunction of transfer-ECU |

**MUT-II Self-Diag Code**
- Is code No. 34 output?

YES → Code No. 34 Freewheel engage solenoid valve system check (Refer to P.23-82.)

NO ↓

**MUT-II Data List**
- No. 38 Freewheel engage switch
  **OK:** Refer to P.23-87 (Data List Chart).

OK → Transient malfunction (Refer to GROUP 00 - Points to Note for Transient Malfunctions.)

NG ↓

Freewheel engage switch check (Refer to GROUP 26 - Freewheel Clutch.)

NG → **Replace**

OK ↓

**Check the following connector:** B-54

NG → **Repair**

OK ↓

Measure at freewheel engage switch connector B-54.
- Disconnect the connector and measure at the harness side.

(1) Resistance between terminal 1 and earth
**OK:** 2 Ω or less
(2) Voltage between terminal 2 and earth (Ignition switch: ON)
**OK:** System voltage

(1)NG → **Check the following connector:** B-40
- OK ↓
- NG → **Repair**

Check the harness between the freewheel engage switch and earth, and repair if necessary.

(2)NG → **Check the following connectors:** E-108, E-113, B-40
- OK ↓
- NG → **Repair**

Check the harness between the freewheel engage switch and the transfer-ECU, and repair if necessary.

OK ↓

**Check the following connector:** B-54

NG → **Repair**

OK ↓

Check the trouble symptoms.

NG → Replace the transfer-ECU.

Purchased from www.WorkshopManuals.co.uk

www.WorkshopManuals.co.uk

| Code No. 41 Shift actuator system (open circuit or short-circuit) | Probable cause |
|---|---|
| Code No. 41 is output to indicate an open circuit or short-circuit in the shift actuator if the transfer-ECU terminal voltage is higher than the main relay voltage (90% of the rated voltage), or lower than the main relay voltage (10% of the rated voltage) when shift operation is not being carried out. | ● Malfunction of shift actuator<br>● Malfunction of harness or connector<br>● Malfunction of transfer-ECU |

★ Refer to the Transmission Workshop Manual.

**MUT-II Data List**
- No. 12 Shift actuator voltage
  **OK:** Refer to P.23-87 (Data List Chart).

OK → Transient malfunction (Refer to GROUP 00 - Points to Note for Transient Malfunctions.)

NG ↓

Measure at transfer-ECU connector E-105
- Measure at ECU terminals.
- Drive the shift actuator in accordance with MUT-II actuator test No. 2.
- Voltage between terminal 1 and earth
  **OK:** System voltage
- Drive the shift actuator in accordance with MUT-II actuator test No. 3.
- Voltage between terminals 3 and earth
  **OK:** System voltage

NG → **Check the following connector:** E-105
- OK → Replace the transfer-ECU.
- NG → **Repair**

OK ↓

Measure at shift actuator connector C-11.
- Disconnect the connector and measure at the harness side.
- Drive the shift actuator in accordance with MUT-II actuator test No. 2.
- Voltage between terminals 2 and earth
  **OK:** System voltage
- Drive the shift actuator in accordance with MUT-II actuator test No. 3.
- Voltage between terminal 1 and earth
  **OK:** System voltage

NG → **Check the following connectors:** C-11, E-105
- OK → Check the harness between the shift actuator and the transfer-ECU, and repair if necessary.
- NG → **Repair**

OK ↓

**Check the following connector:** C-11

NG → **Repair**

OK ↓

Check the trouble symptoms.

NG → Replace the shift actuator. ★

Purchased from www.WorkshopManuals.co.uk

www.WorkshopManuals.co.uk

| Code No. 42 Shift actuator system (short-circuit)<br>Code No. 43 Shift actuator system (open circuit) | Probable cause |
|---|---|
| Code No. 42 is output to indicate a short-circuit in the shift actuator if the shift actuator current is +1 A greater than the target value while the actuator is being driven.<br>Code No. 43 is output to indicate an open circuit in the shift actuator if the main relay voltage is lower than 6 V, or the shift actuator current is 0.1 A lower than the actual value while the actuator is being driven. | ● Malfunction of shift actuator<br>● Malfunction of harness or connector<br>● Malfunction of transfer-ECU |

★ Refer to the Transmission Workshop Manual.

**MUT-II Data List**
- No. 10 Shift actuator voltage
  **OK:** Refer to P.23-87 (Data List Chart).

OK → Transient malfunction (Refer to GROUP 00 - Points to Note for Transient Malfunctions.)

NG ↓

Measure at transfer-ECU connector E-105
- Measure at ECU terminals.
- Drive the shift actuator in accordance with MUT-II actuator test No. 2.
- Voltage between terminal 1 and earth
  **OK:** System voltage
- Drive the shift actuator in accordance with MUT-II actuator test No. 3.
- Voltage between terminals 3 and earth
  **OK:** System voltage

NG → **Check the following connector:** E-105
- OK → Replace the transfer-ECU.
- NG → **Repair**

OK ↓

Measure at shift actuator connector C-11.
- Disconnect the connector and measure at the harness side.
- ●rive the shift actuator in accordance with MUT-II actuator test No. 2.
- Voltage between terminals 2 and earth
  **OK:** System voltage
- Drive the shift actuator in accordance with MUT-II actuator test No. 3.
- Voltage between terminal 1 and earth
  **OK:** System voltage

NG → **Check the following connectors:** C-11, E-105
- OK → Check the harness between the shift actuator and the transfer-ECU, and repair if necessary.
- NG → **Repair**

OK ↓

**Check the following connector:** C-11

NG → **Repair**

OK ↓

Check the trouble symptoms.

NG → Replace the shift actuator. ★

Purchased from www.WorkshopManuals.co.uk

www.WorkshopManuals.co.uk

| Code No. 44 Shift actuator system (overload) | Probable cause |
|---|---|
| Code No. 44 is output to indicate an overload of the shift actuator when the total time calculated for driving the shift actuator exceeds 5 minutes. | • Malfunction of shift actuator<br>• Malfunction of harness or connector<br>• Malfunction of transfer-ECU<br>• Malfunction of transfer shift mechanism |

★ Refer to the Transmission Workshop Manual.

**MUT-II Actuator test**
- No. 2, No. 3 Shift actuator
  **OK** Refer to P.23-89 (Actuator Test).

NG → Replace the shift actuator. ★

OK ↓

**MUT-II Data List**
- No. 12 Shift actuator voltage
  **OK:** Refer to P.23-87 (Data List Chart).

OK → Transient malfunction (Refer to GROUP 00 - Points to Note for Transient Malfunctions.)

NG ↓

Measure at transfer-ECU connector E-105
- Measure at ECU terminals.
- Drive the shift actuator in accordance with MUT-II actuator test No. 2.
- Voltage between terminal 1 and earth
  **OK:** System voltage
- Drive the shift actuator in accordance with MUT-II actuator test No. 3.
- Voltage between terminals 3 and earth
  **OK:** System voltage

NG → **Check the following connector:** E-105
- OK → Replace the transfer-ECU.
- NG → **Repair**

OK ↓

Measure at shift actuator connector C-11.
- Disconnect the connector and measure at the harness side.
- Drive the shift actuator in accordance with MUT-II actuator test No. 2.
- Voltage between terminals 2 and earth
  **OK:** System voltage
- Drive the shift actuator in accordance with MUT-II actuator test No. 3.
- Voltage between terminal 1 and earth
  **OK:** System voltage

NG → **Check the following connectors:** C-11, E-105
- OK → Check the harness between the shift actuator and the transfer-ECU, and repair if necessary.
- NG → **Repair**

OK ↓

**Check the following connector:** C-11

NG → **Repair**

| Code No. 45 Incorrect tyre diameters | Probable cause |
|---|---|
| Code No. 45 is output to indicate incorrect tyre pressure, uneven tyre sizes or non-uniform tyre brands, which have caused a large difference in speed between the front and rear wheel speeds and the setting values when the freewheel engage switch is on. | • Malfunction of tyre<br>• Malfunction of transfer-ECU |

Tyre Check

NG → **Replace**

OK ↓

Check the trouble symptoms.

NG → Replace the transfer-ECU.

| Code No. 51 Malfunction of transfer-ECU | Probable cause |
|---|---|
| Code No. 51 is output when a problem with the transfer-ECU is detected. | • Malfunction of transfer-ECU |

Replace the transfer-ECU.

Purchased from www.WorkshopManuals.co.uk

www.WorkshopManuals.co.uk

## DATA LIST REFERENCE TABLE

| Item No. | Check item | Inspection conditions | | Normal condition |
|---|---|---|---|---|
| 1 | Accelerator pedal position sensor (APS) | Engine: Stopped<br>Selector lever position: P | Accelerator pedal: Fully closed | 985 - 1,085 mV |
| | | | Accelerator pedal: Depressed | Gradually increases from the above value. |
| | | | Accelerator pedal: Fully open | 4000 mV or higher |
| 2 | Front propeller shaft speed sensor | Transfer position: 4WD | Driving at a constant speed of 30 km/h | 30 km/h |
| 3 | Rear propeller shaft speed sensor | Transfer position: 4WD | Driving at a constant speed of 30 km/h | 30 km/h |
| 4 | Difference between front and rear propeller shaft speeds | Transfer position: 4WD | Driving at a constant speed of 30 km/h | Within 5 km/h |
| 5 | Vehicle speed | Idling in 1st (Vehicle stopped) | | 0 km/h |
| | | Driving at a constant speed of 50 km/h in 3rd | | 50 km/h |
| 6 | Transfer lever position | Ignition switch: ON<br>Engine: Stopped | Transfer shift lever position: 2H | 2H |
| | | | Transfer shift lever position: 4H | 4H |
| | | | Transfer shift lever position: 4HLc | 4HLc |
| | | | Transfer shift lever position: 4LLc | 4LLc |
| 7 | Transfer position | Driving at a constant speed of 10 km/h | Transfer shift lever position: 2H → 4H | 2H - 4H → 4H |
| | | | Transfer shift lever position: 4H → 4HLc | 4H - 4HL → 4HL |
| | | Engine: Stopped<br>Selector lever position: N | Transfer shift lever position: 4HLc → 4LLc | 4HL - 4LL → 4LL |
| | | | Transfer shift lever position: 4LLc → 4HLc | 4HL - 4LL → 4HL |
| | | Driving at a constant speed of 10 km/h | Transfer shift lever position: 4HLc → 4H | 4H - 4HL → 4H |
| | | | Transfer shift lever position: 4H → 2H | 2H - 4H → 2H |
| 8 | Main relay voltage | Ignition switch: ON | | System voltage (V) |
| 9 | Ignition voltage | Ignition switch: ON | | System voltage (V) |
| 10 | Shift actuator current | During transfer selection (while motor is running) | | 0 A → 0.2 A → 0 A |
| 11 | Target current | During transfer selection (while motor is running) | | 0 A → 1.5 A → 0 A |
| 12 | Shift actuator voltage | Ignition switch: ON<br>Selector lever position: N<br>Transfer shift lever position: 2H → 4H (or 4H → 4HLc, 4HLc → 4LLc) | | System voltage (V) |
| | | Ignition switch: ON<br>Selector lever position: N<br>Transfer shift lever position: 4LLc → 4HLc (or 4HLc → 4H, 4H → 2H) | | System voltage (V) |

Purchased from www.WorkshopManuals.co.uk

www.WorkshopManuals.co.uk

| Item No. | Check item | Inspection conditions | | Normal condition |
|---|---|---|---|---|
| 21 | Ignition switch | Ignition switch: ON | | ON |
| | | Ignition switch: OFF | | OFF |
| 22 | Transmission identification | Vehicles with A/T | | A/T |
| 23 | Stop lamp switch | Ignition switch: ON<br>Engine: Stopped | Brake pedal: Depressed | ON |
| | | | Brake pedal: Released | OFF |
| 24 | Transfer lever switch 2H | Transfer shift lever position: 2H | | ON |
| | | Transfer shift lever position: Other than the above | | OFF |
| 25 | Transfer lever switch 4H | Transfer shift lever position: 4H | | ON |
| | | Transfer shift lever position: Other than the above | | OFF |
| 26 | Transfer lever switch 4HLc | Transfer shift lever position: 4HLc | | ON |
| | | Transfer shift lever position: Other than the above | | OFF |
| 27 | Transfer lever switch 4LLc | Transfer shift lever position: 4LLc | | ON |
| | | Transfer shift lever position: Other than the above | | OFF |
| 28 | Engine identification | Petrol vehicles | | PETROL |
| | | Diesel vehicles | | DIESEL |
| 30 | Freewheel engage solenoid valve | During 2WD | | ON |
| | | During 4WD | | OFF |
| 31 | Inhibitor switch N | Selector lever position: N | | ON |
| | | Selector lever position: Other than the above | | OFF |
| 32 | Inhibitor switch P | Selector lever position: P | | ON |
| | | Selector lever position: Other than the above | | OFF |
| 33 | 2WD switch | Driving conditions: 2WD (2H) | | ON |
| | | Driving conditions: Other than the above | | OFF |
| 34 | 2WD/4WD switch | Driving conditions: 2WD (2H), 4WD (4H) | | ON |
| | | Driving conditions: Other than the above | | OFF |
| 35 | 4H switch | Driving conditions: 4WD (4H), 4WD (4HLc) | | ON |
| | | Driving conditions: Other than the above | | OFF |
| 36 | Center differential lock switch | Driving conditions: 4WD (4HLc), 4WD (4LLc) | | ON |
| | | Driving conditions: Other than the above | | OFF |
| 37 | 4LLc switch | Driving conditions: 4WD (4LLc) | | ON |
| | | Driving conditions: Other than the above | | OFF |
| 38 | Freewheel engage switch | During 2WD | | OFF |
| | | During 4WD | | ON |

Purchased from www.WorkshopManuals.co.uk

www.WorkshopManuals.co.uk

## ACTUATOR TEST TABLE

| Item No. | Check item | Test contents | Inspection conditions | Normal condition |
|---|---|---|---|---|
| 1 | Freewheel engage solenoid valve | The freewheel engage solenoid valve is driven. | Ignition switch: ON<br>Selector lever position: P<br>Engine: 0 r/min<br>Vehicle speed: 0 km/h (vehicle stopped) | If the freewheel engage solenoid valve is on, it is turned off, and if it is off, it is turned on. |
| 2 | Shift actuator | The motor inside the shift actuator is run in the forward direction. | | If the transfer is at the 2H, 4H or 4HLc position, it shifts from that position to the 2H, 4H, 4HLc, 4LLc positions in that order, and then returns to the original position. If it is at the 4LLc position, no shifting is carried out. |
| 3 | | The motor inside the shift actuator is run in the reverse direction. | | If the transfer is at the 4H, 4HLc or 4LLc position, it shifts from that position to the 4LLc, 4HLc , 4H, 2H positions in that order, and then returns to the original position. If it is at the 2H position, no shifting is carried out. |

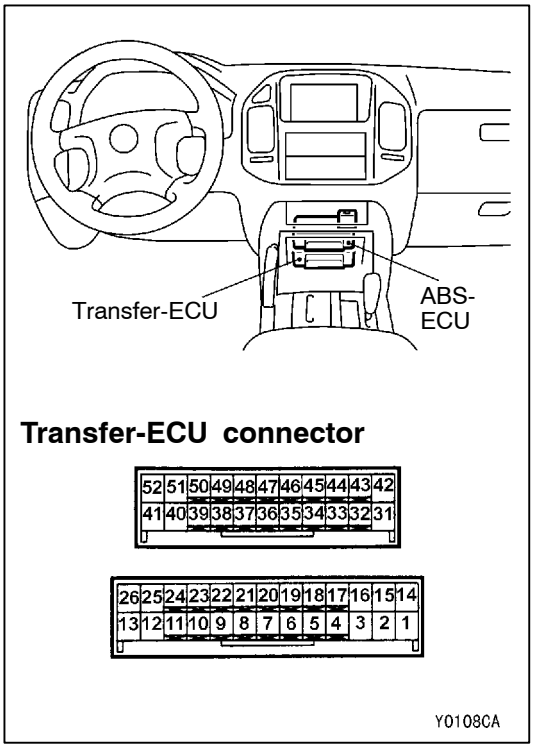


## TRANSFER-ECU TERMINAL VOLTAGE TABLE

NOTE
There are two ECUs with the same shape inside the floor console, one above the other. The top ECU is the ABS-ECU, and it has a blue connector. The bottom ECU is the transfer-ECU, and it has a green connector.

Purchased from www.WorkshopManuals.co.uk

www.WorkshopManuals.co.uk

| Terminal No. | Check item | Inspection conditions | Standard value |
|---|---|---|---|
| 1 | Shift actuator | Transfer shift lever position: 2H → 4H | 5.6 V → 11.0 V → 5.6 V |
| 3 | Shift actuator | Transfer shift lever position: 4H → 2H | 5.6 V → 11.0 V → 5.6 V |
| 5 | Accelerator pedal position sensor (APS) | Accelerator pedal: Fully closed (engine stopped) | 0.985 - 1.085 V |
| | | Accelerator pedal: Fully open (engine stopped) | 4.0 V or higher |
| 7 | Front propeller shaft speed sensor | Measure the voltage between terminals 7 and 18 using an oscilloscope.<br>Engine: 2 000 r/min<br>Shift range: 4th | Oscilloscope check procedure (Refer to P. 23-69 <Wave Pattern B>.) |
| 9 | Rear propeller shaft speed sensor | Measure the voltage between terminals 9 and 18 using an oscilloscope.<br>Engine: 2 000 r/min<br>Shift range: 4th | Oscilloscope check procedure (Refer to P. 23-69 <Wave Pattern B>.) |
| 11 | Diagnosis output | When normal (no diagnosis codes are output) | 0 V and 5 V alternates |
| 13 | Power supply | Ignition switch: OFF | 0 V |
| | | Ignition switch: ON | System voltage |
| 18 | Sensor earth | At all times | 0.5 V or less |
| 20 | Transfer lever switch 2H | Transfer shift lever position: 2H | System voltage |
| | | Transfer shift lever position: Other than the above | 0 V |
| 21 | Transfer lever switch 4H | Transfer shift lever position: 4H | System voltage |
| | | Transfer shift lever position: Other than the above | 0 V |
| 22 | Transfer lever switch 4HLc | Transfer shift lever position: 4HLc | System voltage |
| | | Transfer shift lever position: Other than the above | 0 V |
| 23 | Transfer lever switch 4LLc | Transfer shift lever position: 4LLc | System voltage |
| | | Transfer shift lever position: Other than the above | 0 V |
| 24 | Diagnosis control | – | – |
| 25 | Earth | At all times | 0 V |
| 26 | Earth | At all times | 0 V |
| 31 | Backup power supply | At all times | System voltage |
| 32 | Inhibitor switch N | Selector lever position: N | System voltage |
| | | Selector lever position: Other than the above | 0 V |
| 33 | Inhibitor switch P | Selector lever position: P | System voltage |
| | | Selector lever position: Other than the above | 0 V |
| 34 | Stop lamp switch | Brake pedal: Depressed | System voltage |
| | | Brake pedal: Released | 0 V |
| 35 | Earth | At all times | 0 V |
| 37 | Rear wheel indicator lamp | Other than during transfer selection | System voltage |
| 38 | Front wheel indicator lamp | During 4WD | System voltage |
| 39 | Earth <6G7> | At all times | 0 V |

Purchased from www.WorkshopManuals.co.uk

www.WorkshopManuals.co.uk

| Terminal No. | Check item | Inspection conditions | Standard value |
|---|---|---|---|
| 40 | Center differential lock lamp | During 4WD (4HLc or 4LLc) | System voltage |
| 41 | Solenoid valve A, B | Transfer shift lever position: 2H | 1 V |
| | | Transfer shift lever position: Other than 2H | System voltage |
| 42 | Earth | At all times | 0 V |
| 43 | 2WD switch | Transfer shift lever position: 2H | 0 V |
| | | Transfer shift lever position: Other than 2H | 10.5 V |
| 44 | 2WD/4WD switch | Transfer shift lever position: 2H or 4H | 0 V |
| | | Transfer shift lever position: 4HLc or 4LLc | 10.5 V |
| 45 | 4H switch | Transfer shift lever position: 4H or 4HLc | 0 V |
| | | Transfer shift lever position: 2H or 4LLc | 10.5 V |
| 46 | Center differential lock switch | Transfer shift lever position: 4HLc or 4LLc | 0 V |
| | | Transfer shift lever position: 2H or 4H | 10.5 V |
| 47 | 4HLc switch | Transfer shift lever position: 4LLc | 0 V |
| | | Transfer shift lever position: Other than 4LLc | 10.5 V |
| 50 | Freewheel engage switch | Transfer position: 2WD | 10.5 V |
| | | Transfer position: 4WD | 0 V |

Purchased from www.WorkshopManuals.co.uk

www.WorkshopManuals.co.uk

# TROUBLESHOOTING <SHIFT LOCK AND KEY INTERLOCK MECHANISMS>

## DIAGNOSIS FUNCTION

### Input signal check procedure

Connect the MUT-II or a voltage meter to the diagnosis connector, and check the inhibitor switch (reverse) input signal.
(Refer to GROUP 00 - Guide to Troubleshooting and Inspection Procedures.)

## INSPECTION CHART CLASSIFIED BY TROUBLE SYMPTOMS

| Trouble Symptom | Inspection procedure No. | Reference page |
|---|---|---|
| When the ignition switch is at a position other than the LOCK position, the selector lever can be moved from the P to the R position even though the brake pedal is not depressed. | 1 | 23-92 |
| When the ignition switch is at a position other than the LOCK position, the selector lever cannot be moved from the P to the R position even though the brake pedal is being depressed. | 2 | 23-92 |
| The ignition switch is at the LOCK position, but the selector lever can be moved from the P to the R position when the brake pedal is depressed. | 3 | 23-93 |
| The selector lever cannot be easily moved from the P to the R position. | 4 | 23-93 |
| The selector lever cannot be moved from the R to the P position. | 5 | 23-93 |
| The ignition key cannot be turned to the LOCK position when the selector lever is at the P position. | 6 | 23-93 |
| The ignition key can be turned to the LOCK position even when the selector lever is at a position other than the P position. | 7 | 23-93 |

## INSPECTION PROCEDURES FOR TROUBLE SYMPTOM

### Inspection procedure 1

| **When the ignition switch is at a position other than the LOCK position, the selector lever can be moved from the P to the R position even though the brake pedal is not depressed.** | **Probable cause** |
|---|---|
| The cause is probably a malfunction of the selector lever assembly lock cam or of the shift lock cable unit. | • Malfunction of lock cam<br>• Malfunction of shift lock cable unit |

Check by referring to the probable causes.

### Inspection procedure 2

| **When the ignition switch is at a position other than the LOCK position, the selector lever cannot be moved from the P to the R position even though the brake pedal is being depressed.** | **Probable cause** |
|---|---|
| The cause is probably a malfunction of the selector lever assembly, transmission control cable, shift lock cable unit or the ignition key cylinder lock bar. | • Malfunction of selector lever assembly<br>• Malfunction of transmission control cable<br>• Malfunction of shift lock cable unit<br>• Malfunction of lock bar |

Check by referring to the probable causes.

Purchased from www.WorkshopManuals.co.uk

www.WorkshopManuals.co.uk

### Inspection procedure 3

| The ignition switch is at the LOCK position, but the selector lever can be moved from the P to the R position when the brake pedal is depressed. | Probable cause |
|---|---|
| The cause is probably a malfunction of the shift lock cable unit or of the ignition key cylinder lock bar. | • Malfunction of shift lock cable unit<br>• Malfunction of lock bar |

Check by referring to the probable causes.

### Inspection procedure 4

| The selector lever cannot be easily moved from the P to the R position. | Probable cause |
|---|---|
| The cause is probably a malfunction of the selector lever assembly, transmission control cable, shift lock cable unit or the ignition key cylinder lock bar. | • Malfunction of selector lever assembly<br>• Malfunction of transmission control cable<br>• Malfunction of shift lock cable unit<br>• Malfunction of lock bar |

Check by referring to the probable causes.

### Inspection procedure 5

| The selector lever cannot be moved from the R to the P position. | Probable cause |
|---|---|
| The cause is probably a malfunction of the selector lever assembly or of the transmission control cable. | • Malfunction of selector lever assembly<br>• Malfunction of transmission control cable |

Check by referring to the probable causes.

### Inspection procedure 6

| The ignition key cannot be turned to the LOCK position when the selector lever is at the P position. | Probable cause |
|---|---|
| The cause is probably a malfunction of the selector lever assembly, shift lock cable unit or the ignition key cylinder lock bar. | • Malfunction of selector lever assembly<br>• Malfunction of shift lock cable unit<br>• Malfunction of lock bar |

Check by referring to the probable causes.

### Inspection procedure 7

| The ignition key can be turned to the LOCK position even when the selector lever is at a position other than the P position. | Probable cause |
|---|---|
| The cause is probably a malfunction of the shift lock cable unit or of the ignition key cylinder lock bar. | • Malfunction of shift lock cable unit<br>• Malfunction of lock bar |

Check by referring to the probable causes.

Purchased from www.WorkshopManuals.co.uk

www.WorkshopManuals.co.uk

# ON-VEHICLE SERVICE

## BASIC ADJUSTMENT PROCEDURES

### AUTOMATIC TRANSMISSION FLUID (ATF) CHECK

NOTE
When replacing the transmission with a new one, overhauling the existing transmission, or driving in a harsh condition, the ATF cooler line should always be flushed out and ATF should be replaced with a new one.

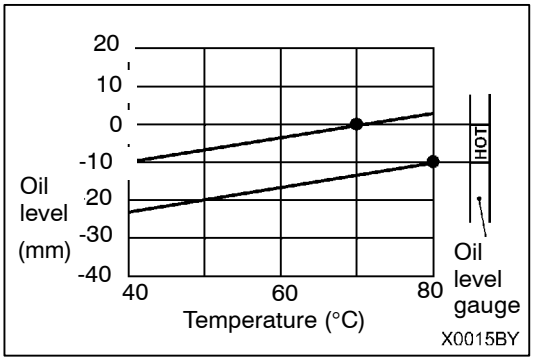


1. Drive the vehicle until the ATF temperature reaches the normal temperature (70 - 80°C).

   NOTE
   1) Measure ATF temperature using MUT-II.
   2) Check the oil level referring to the characteristics chart shown at left if it takes some time to reach the normal operation temperature of ATF (70 - 80°C.)
2. Park the vehicle on a level surface.
3. Move the selector lever to all positions to fully charge the torque converter and the fluid lines with ATF, and then move the selector lever to the “N” position.
4. After wiping away any dirt from around the oil level gauge, pull out the oil level gauge and check the level of ATF.

   NOTE
   If the ATF has a burnt smell, or if it has become very contaminated or dirty, it means that the ATF has become contaminated by minute particles from bushings (metal) or worn parts. In such a case, the transmission needs to be overhauled and the ATF cooler line needs to be flushed out.

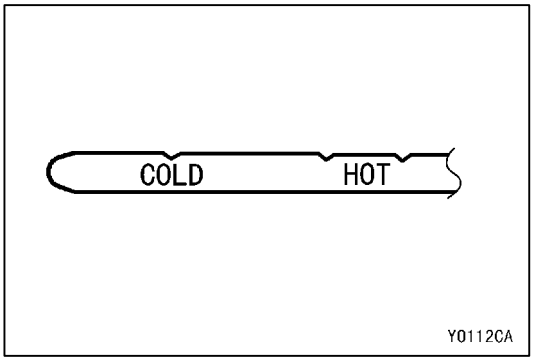


5. Check that the ATF level is between the “HOT” marks on the oil level gauge. If the ATF level is too low, add more ATF until the level reaches between the “HOT” marks.

   **Automatic transmission fluid:**
   **DIA QUEEN ATF SP II M, SP III or equivalent**

   NOTE
   If the ATF level is too low, the oil pump draws air into the system along with the ATF, and air bubbles will thus form in the fluid circuit. This will cause a drop in fluid pressure and cause the shift points to change and the clutches and brakes to slip.
   If the ATF level is too high, the gear will churn the ATF and cause bubbles to develop, which can then cause the same problems as when the ATF fluid is too low. In either case, the air bubbles can cause overheating and oxidation of the ATF, and also prevent the valves, clutches and brakes from operating normally. In addition, if bubbles develop in the ATF, the ATF can overflow from the transmission vent holes and be mistaken for leaks.
6. Securely re-insert the oil level gauge.

Purchased from www.WorkshopManuals.co.uk

www.WorkshopManuals.co.uk

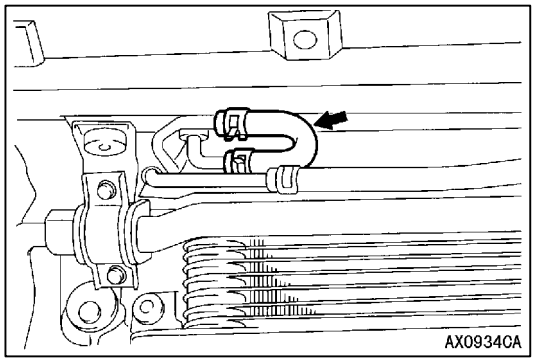


## AUTOMATIC TRANSMISSION FLUID (ATF) REPLACEMENT

NOTE
Before replacing the transmission with a new one, overhauling the existing transmission, or connecting the cooler pipe to the transmission, the ATF cooler line should always be flushed out.
If you have an ATF changer, use the ATF changer to flush the ATF. If you do not have an ATF changer, follow the procedure given below.

1. Remove the hose shown in the illustration which allows the ATF to flow from the ATF cooler (built into the radiator) to the transmission.
2. Start the engine and discharge the ATF.
   Driving conditions: N range, idling

   NOTE
   The engine should be stopped within one minute of it being started. If the ATF has all been discharged before this, stop the engine at that point.
   Discharge amount: Approx. 4.0 L

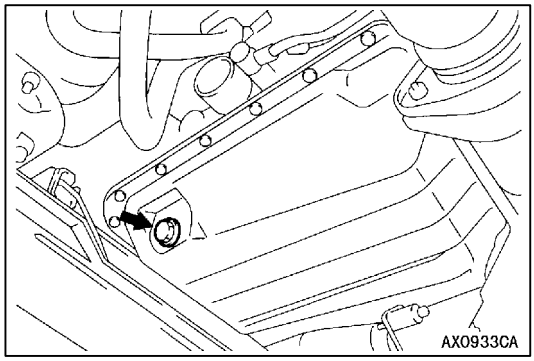


3. Remove the drain plug at the bottom of the transmission case to drain out the remaining ATF.

   **Discharge amount: Approx. 2.0 L**
4. Install the drain plug with a gasket in between, and tighten it to the specified torque.

   **Tightening torque: 32 ± 2 N·m**
5. Pour in new ATF through the oil filler tube.

   **Amount to add: Approx. 6.0 L**

   NOTE
   Stop pouring in the ATF once 6.0 litre has been poured in.
6. Repeat the operation in step 2.

   NOTE
   Carry out steps 2 and 6 so that at least 8.0 litre has been discharged from the cooler hose. After this, discharge a small quantity of ATF and check for contamination. If the ATF is contaminated, repeat steps 5 and 6.
7. Pour in new ATF through the oil filler tube.

   **Amount to add: Approx. 4.0 L**

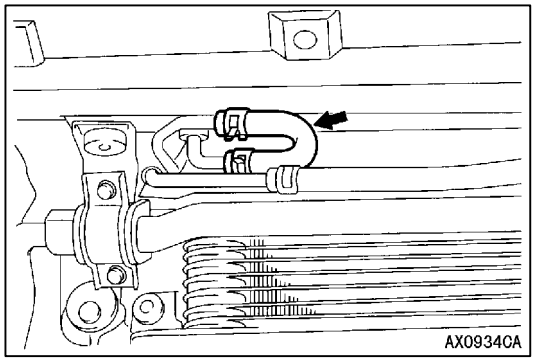


8. Connect the hose which was disconnected in step 1, and then securely re-insert the oil level gauge.
9. Start the engine, and let it run at idle for 1 - 2 minutes.
10. Move the selector lever to all positions once, and then return it to the N position.

Purchased from www.WorkshopManuals.co.uk

www.WorkshopManuals.co.uk

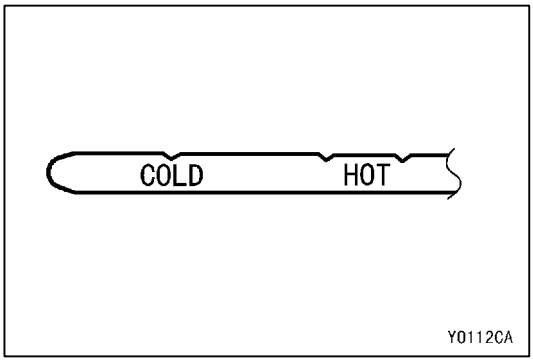


11. Check that the ATF level on the oil level gauge is at the "COLD" mark. If it is not up to this mark, add more ATF.

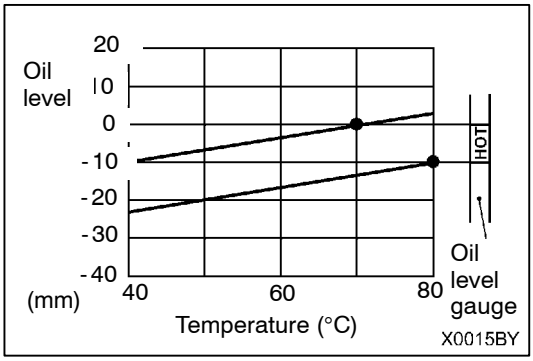


12. Drive the vehicle until the ATF temperature reaches the normal temperature (70 - 80°C), and then re-check the ATF level.
    The ATF level must be between the HOT marks.

    NOTE
    (1) The "COLD" mark is for reference only; the "HOT" marks should be used as the standard for judgment.
    (2) Measure ATF temperature using MUT-II.
    (3) Check the oil level referring to the characteristics chart shown at left if it takes some time until reaching the normal operation temperature of ATF (70 - 80C.)
13. Securely insert the oil level gauge into the oil filler tube.

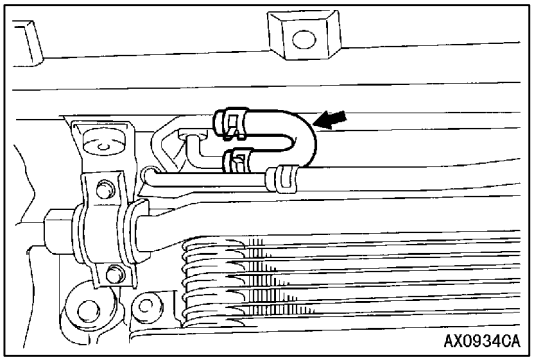


**ATF COOLER LINE FLUSHING PROCEDURE**

NOTE
If replacing the transmission with a new one, if overhauling the existing transmission, or if the ATF has deteriorated or is contaminated, the ATF cooler line must always be flushed out.

1. Remove the hose shown in the illustration which allows the ATF to flow from the ATF cooler (built into the radiator) to the transmission.
2. Start the engine and discharge the ATF.
   Driving conditions: N range, idling

   NOTE
   The engine should be stopped within one minute of it being started.If the ATF has all been discharged before this, stop the engine at that point.

   **Discharge amount: Approx. 4.0 L**
3. Pour in new ATF through the oil filler tube.

   **Amount to add: Approx. 4.0 L**

Purchased from www.WorkshopManuals.co.uk

www.WorkshopManuals.co.uk

NOTE
Stop pouring in the ATF once 4.0 litre has been poured in.

4. Repeat the operation in step 2.

NOTE
Carry out steps 2 and 6 so that at least 8.0 L has been discharged from the cooler hose.After this, discharge a small quantity of ATF and check for contamination.If the ATF is contaminated, repeat steps 3 and 4.

5. Carry out the procedure in ”Automatic Transmission Fluid (ATF) Replacement” from step 3 onwards.

## ACCELERATOR PEDAL POSITION SENSOR (APS) ADJUSTMENT

Refer to GROUP 13 - On-vehicle Service.

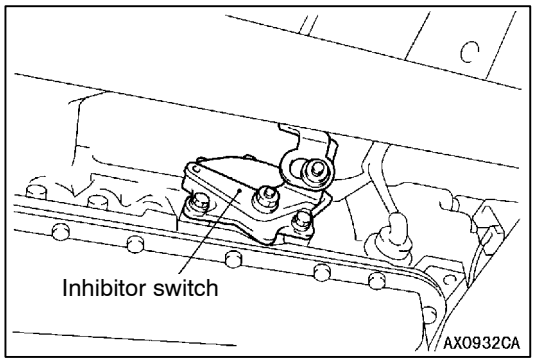


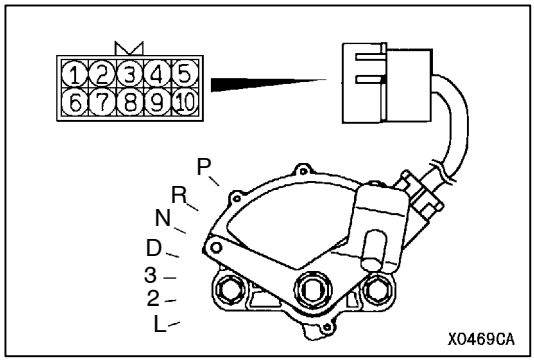


## INHIBITOR SWITCH CONTINUITY CHECK

| Item | Terminal No. | | | | | | |
|---|---|---|---|---|---|---|---|
| | 1 | 2 | 3 | 7 | 8 | 9 | 10 |
| P | ○ | | | ○ | | ○ | ○ |
| R | | | | ○ | ○ | | |
| N | | ○ | | ○ | | ○ | ○ |
| D | | | ○ | ○ | | | |

NOTE
The inhibitor switch has 7 positions, but only four positions (P, R, N and D) are used.

Purchased from www.WorkshopManuals.co.uk

www.WorkshopManuals.co.uk

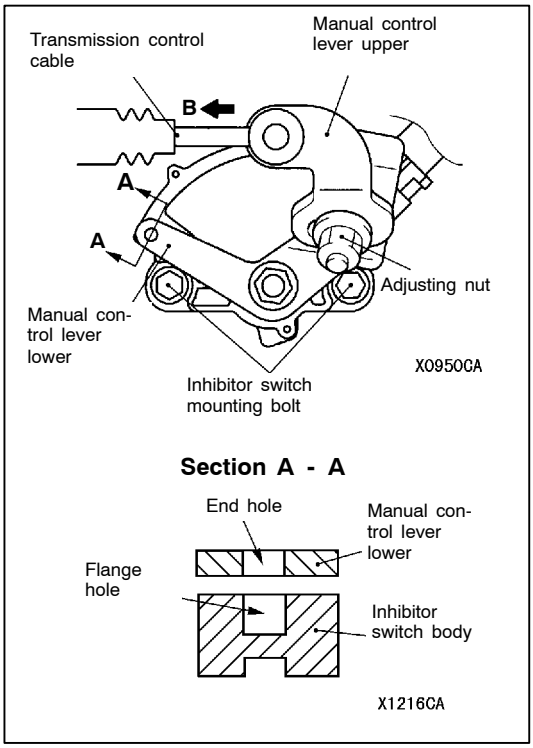


## INHIBITOR SWITCH AND CONTROL CABLE ADJUSTMENT

1. Move the selector lever to the N position.
2. Loosen the adjusting nut, and set the manual control lever upper and lower to the free condition.
3. Move the manual control lever lower to the neutral position.
4. Loosen the inhibitor switch body mounting bolt, and then turn the inhibitor switch to adjust so that the hole at the end of the manual control lever lower and the hole in the inhibitor switch body flange (section A - A in the illustration at left) are aligned.
5. Tighten the inhibitor switch body mounting bolt to the specified torque.

   **Tightening torque: 11 ± 1 N·m**

   NOTE
   Be careful not to let the inhibitor switch body slip out of place.
6. Gently push the transmission control cable in the direction of B as shown in the illustration at left, and tighten the adjusting nut to the specified torque.

   **Tightening torque: 24 ± 4 N·m**
7. Check that the selector lever is at the “N” position.
8. Check that the transmission shifts to the correct range corresponding to the position of the selector lever, and that it functions correctly in that range.

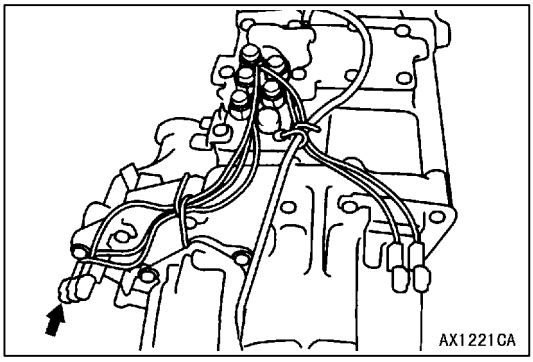


## 2WD/4WD SWITCH CONTINUITY CHECK

Check the continuity between the terminals of the black connector shown in the illustration at left and the transfer case.

| Transfer lever position | Continuity |
|---|---|
| 2H, 4H | Continuity |
| 4HLc, 4LLc | No continuity |

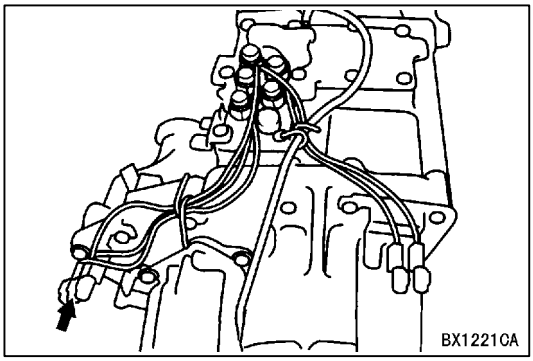


## 4H SWITCH CONTINUITY CHECK

Check the continuity between the milky-white connector terminals shown in the illustration at left and the transfer case.

| Transfer lever position | Continuity |
|---|---|
| 2H, 4LLc | No continuity |
| 4H, 4HLc | Continuity |

Purchased from www.WorkshopManuals.co.uk

www.WorkshopManuals.co.uk

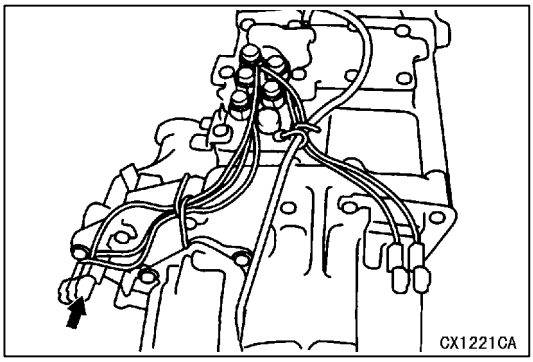


### CENTER DIFFERENTIAL LOCK SWITCH CONTINUITY CHECK

Check the continuity between the terminals of the brown connector shown in the illustration at left and the transfer case.

| Transfer lever position | Continuity |
|---|---|
| 2H, 4H | No continuity |
| 4HLc, 4LLc | Continuity |

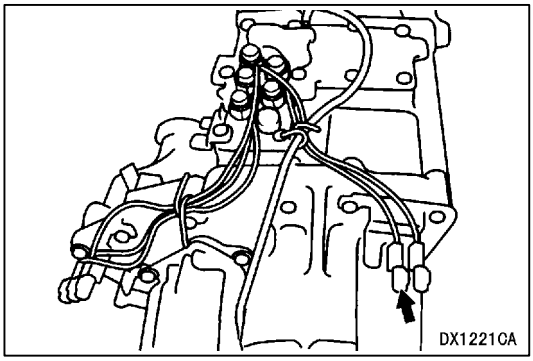


### 2WD SWITCH CONTINUITY CHECK

Check the continuity between the terminals of the black connector shown in the illustration at left and the transfer case.

| Transfer lever position | Continuity |
|---|---|
| 2H | Continuity |
| 4H, 4HLc, 4LLc | No continuity |

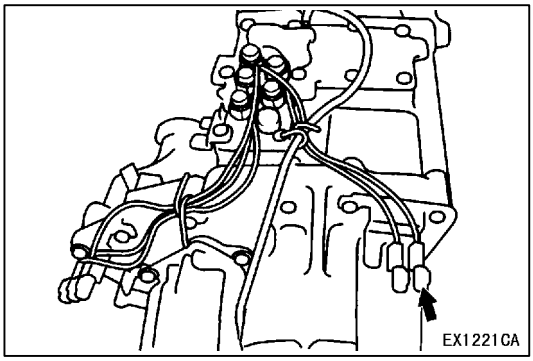


### 4LLc SWITCH CONTINUITY CHECK

Check the continuity between the terminals of the brown connector shown in the illustration at left and the transfer case.

| Transfer lever position | Continuity |
|---|---|
| 4LLc | Continuity |
| 2H, 4H, 4HLc | No continuity |

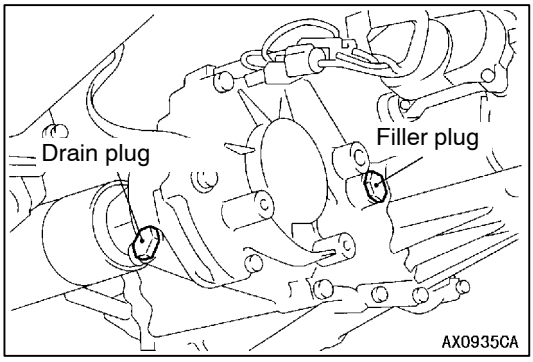


## TRANSFER OIL CHECK

1. Remove the oil filler plug.
2. Check that the oil reaches the hole at the bottom of the oil filler plug.
3. Check that the oil is not severely contaminated, and that it has an appropriate level of viscosity.
4. Install the oil filler plug, and tighten it to the specified torque.

   **Tightening torque: 32 ± 2 N·m**

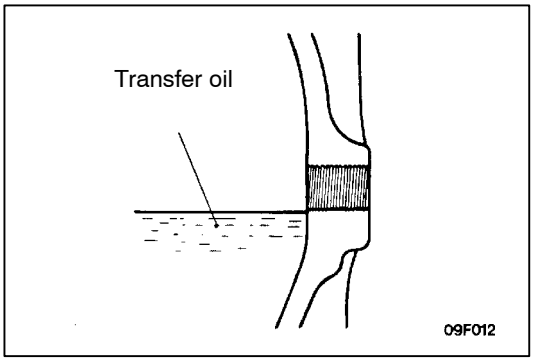


## TRANSFER OIL CHANGE

1. Remove the oil drain plug and drain the oil.
2. Install the oil filler plug, and tighten it to the specified torque.

   **Tightening torque: 32 ± 2 N·m**

3. Remove the oil filler plug, and pour in oil until it reaches the bottom of the oil filler plug.

Purchased from www.WorkshopManuals.co.uk

www.WorkshopManuals.co.uk

**Specified lubricant:**
**Hypoid gear oil SAE 75W-90 or 75W-85W conforming to API GL-4**

**Oil level: 2.8 L**

4. Install the oil filler plug, and tighten it to the specified torque.

   **Tightening torque: 32 ± 2 N·m**

Purchased from www.WorkshopManuals.co.uk

www.WorkshopManuals.co.uk

## LOCATION OF CONTROL COMPONENTS

| Name | Symbol | Name | Symbol |
|---|---|---|---|
| Input shaft speed sensor | O | Freewheel engage switch | N |
| Output shaft speed sensor | V | Vehicle speed sensor | T |
| Crank angle sensor <6G7> | B | Stop lamp switch | F |
| Engine speed sensor <4M4> | D | Shift actuator | S |
| A/T fluid temperature sensor | U | A/T control solenoid valve assembly | U |
| Inhibitor switch | P | Diagnosis connector | I |
| Wide open throttle switch | H | Engine-ECU <4M4> | L |
| Shift switch (UP, DOWN) | J | A/T-ECU <4M4> | L |
| Select switch | J | Engine-A/T-ECU <6G7> | L |
| Dual pressure switch | C | Transfer-ECU | E |
| Accelerator pedal position sensor (APS) | G | A/T control relay | M |
| | | Center differential lock switch | R |
| Solenoid valve A, B | A | 2WD/4WD switch | R |
| Transfer lever switch | K | 2WD switch | R |
| Front propeller shaft speed sensor | Q | 4H switch | R |
| Rear propeller shaft speed sensor | W | 4LLc switch | R |

**<6G7>**

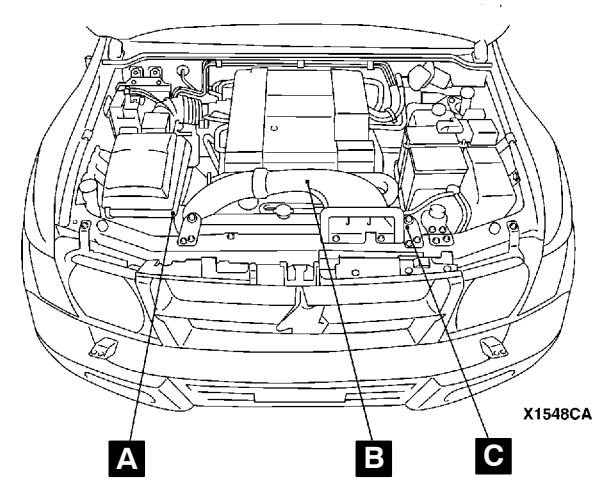


**<4M4>**

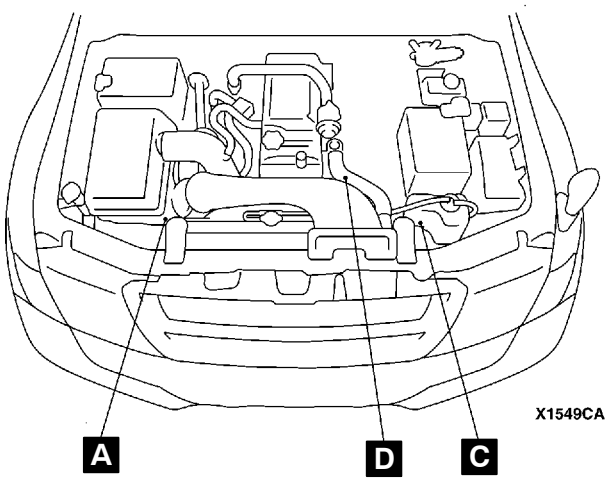


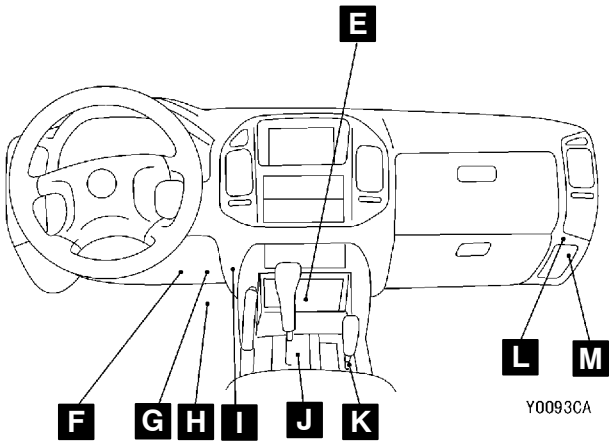


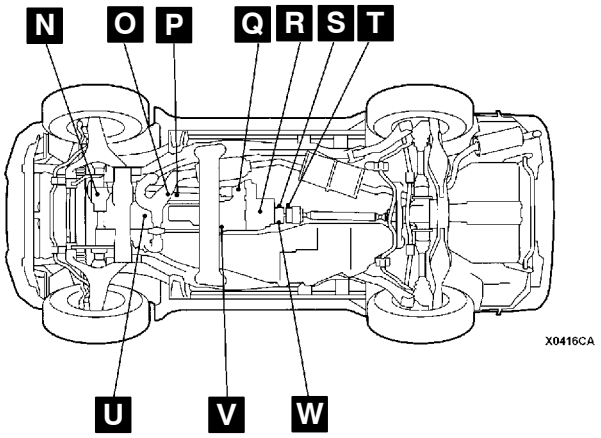


Purchased from www.WorkshopManuals.co.uk

www.WorkshopManuals.co.uk

## CONTROL COMPONENT CHECKS

### CRANK ANGLE SENSOR CHECK <6G7>

Refer to GROUP 13A - Troubleshooting.

### ENGINE SPEED SENSOR CHECK <4M4>

Refer to GROUP 13B - Troubleshooting.

### ACCELERATOR PEDAL POSITION SENSOR (APS) CHECK

Refer to GROUP 13A - On-vehicle Service.

### INHIBITOR SWITCH CONTINUITY CHECK

Refer to P.23-98.

### STOP LAMP SWITCH CHECK

Refer to 35A - Brake Pedal.

### VEHICLE SPEED SENSOR CHECK

Refer to GROUP 54 - Combination Meter.

### DUAL PRESSURE SWITCH CHECK

Refer to GROUP 55A - On-vehicle Service.

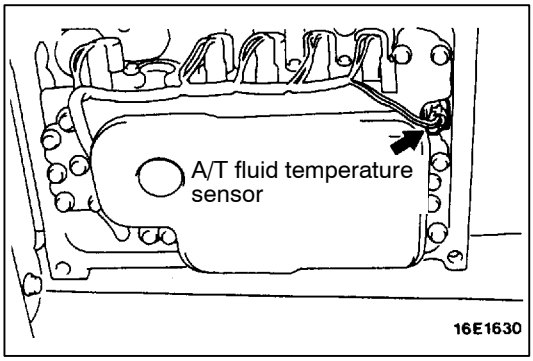


### A/T FLUID TEMPERATURE SENSOR CHECK

1. Remove the A/T fluid temperature sensor.

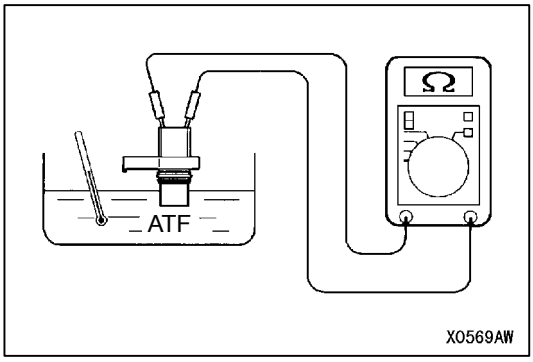


2. Measure the resistance between terminals (1) and (2) of the A/T fluid temperature sensor.

**Standard value:**

| Temperature (°C) | Resistance [kΩ] |
|---|---|
| 0 | 16.7 - 20.5 |
| 20 | 7.3 - 8.9 |
| 40 | 3.4 - 4.2 |
| 60 | 1.9 - 2.2 |
| 80 | 1.0 - 1.2 |
| 100 | 0.57 - 0.69 |

Purchased from www.WorkshopManuals.co.uk

www.WorkshopManuals.co.uk

NOTE
The N range indicator lamp on the combination meter flashes when the temperature reaches approximately 125°C or higher, and then stops flashing when the temperature drops below approximately 115°C.

3. If the A/T fluid temperature sensor resistance and the temperature when the N range indicator lamp is flashing or switched off are outside the standard value ranges, replace the A/T fluid temperature sensor.

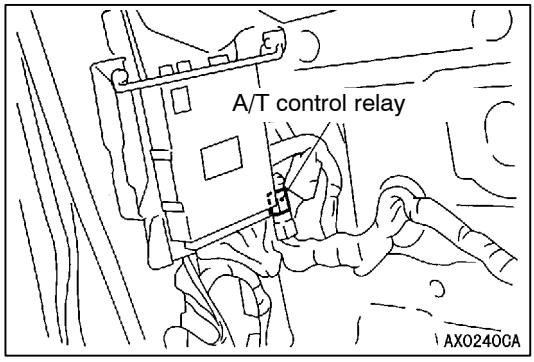


## A/T CONTROL RELAY CHECK

1. Remove the A/T control relay.

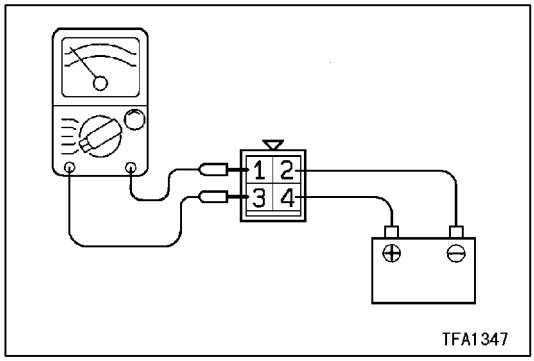


2. Use jumper leads to connect terminal (2) of the A/T control relay to the battery (–) terminal, and terminal (4) to the battery (+) terminal.
3. Check the continuity between terminals (1) and (3) of the A/T control relay while alternately connecting and disconnecting the jumper leads from the battery terminals.

| Jumper leads | Continuity between terminals (1) and (3) |
|---|---|
| Connected | Continuity |
| Disconnected | No continuity |

4. If there is a malfunction, replace the A/T control relay.

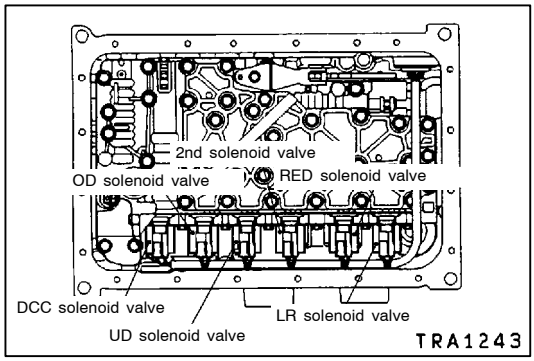


## A/T CONTROL SOLENOID VALVE ASSEMBLY CHECK

1. Remove the valve body cover.
2. Disconnect the connectors for each solenoid valve.

Purchased from www.WorkshopManuals.co.uk

www.WorkshopManuals.co.uk

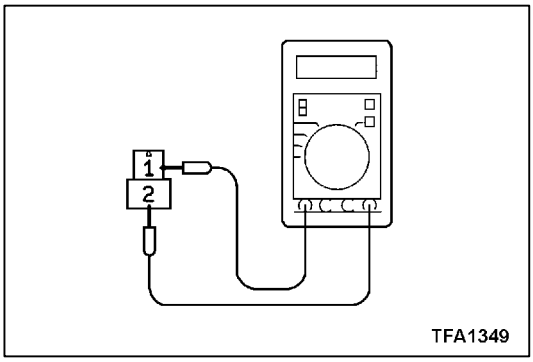


3. Measure the resistances between terminals (1) and (2) of each solenoid valve.

**Standard value:**

| Name | Resistance value |
|---|---|
| Damper clutch control (DCC) solenoid valve | 2.7 - 3.4 kΩ at 20°C |
| Low & reverse solenoid valve (LR solenoid valve) | |
| Second solenoid valve (2ND solenoid valve) | |
| Underdrive solenoid valve (UD solenoid valve) | |
| Overdrive solenoid valve (OD solenoid valve) | |
| Reduction (RED) solenoid valve | |

4. If a measurement value is outside the standard value range, replace the solenoid valve.

**SELECT SWITCH CHECK**

Refer to P.23-119.

**SHIFT SWITCH ASSEMBLY CHECK**

Refer to P.23-119.

Purchased from www.WorkshopManuals.co.uk

www.WorkshopManuals.co.uk

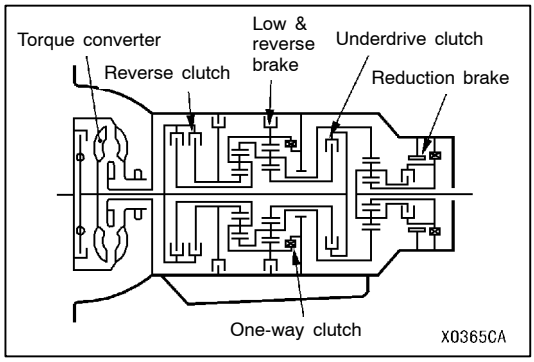


## TORQUE CONVERTER STALL TEST

The purpose of this test is to measure the maximum engine speed when the torque converter stalls in D or R ranges in order to check the torque converter operation and the holding performance of the clutches and brakes which are built into the transmission.

NOTE
For safety, the front and rear of the vehicle should be kept clear of other people while this test is being carried out.

1. Check the ATF level, the ATF temperature and the engine coolant temperature.
   - ATF level: “HOT” position on oil level gauge
   - ATF temperature: 70 - 80°C
   - Engine coolant temperature: 80 - 100°C
2. Place wheel locks on both the left and right front wheels.
3. Pull the parking brake lever to apply the parking brake and depress the brake pedal fully.
4. Start the engine.
5. Move the selector lever to the D position, fully depress the accelerator pedal and quickly take a reading of the maximum engine speed at this time.

   **Caution**
   **(1) Do not keep the throttle fully open for any longer than 8 seconds.**
   **(2) If carrying out the stall test two or more times, move the selector lever to the N position and run the engine at a speed of 1000 r/min to let the ATF cool down before the next test is carried out.**

   **Standard value - Stalling speed:**
   **2,200 - 2,700 r/min <6G7>**
   **2,400 - 2,900 r/min <4M4>**

6. Move the selector lever to the R position and repeat the test described above.

   **Standard value - Stalling speed:**
   **2,200 - 2,700 r/min <6G7>**
   **2,400 - 2,900 r/min <4M4>**

**Torque converter stall test judgment**

1. High stalling speed in both D and R ranges
   - Low line pressure
   - Low & reverse brake slipping
2. High stalling speed in D range only
   - Underdrive clutch slipping
3. High stalling speed in D range only
   - Reverse clutch slipping
   - Reduction brake slipping
4. High stalling speed in both D and R ranges
   - Malfunction of torque converter
   - Poor engine output

Purchased from www.WorkshopManuals.co.uk

www.WorkshopManuals.co.uk

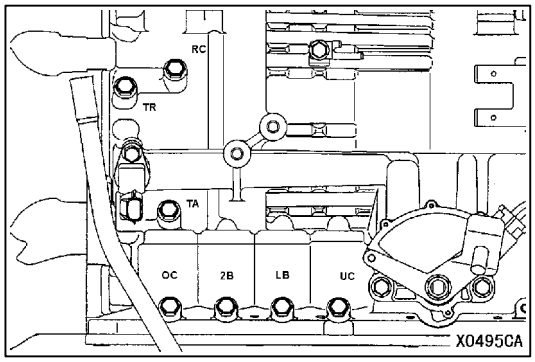


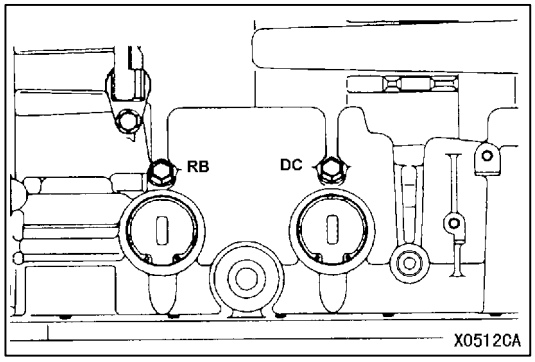


## FLUID PRESSURE TEST

1. Let the engine warm up until the ATF temperature is 70 - 80°C.
2. Jack up the vehicle so that the tires can spin freely.
3. Install the special tool (MD998330: 2 992 kPa oil pressure gauge) and the adapters (MD998332,MD998900 ) to each hydraulic pressure outlet port.
4. Measure the various hydraulic pressures under the conditions given in the standard hydraulic pressure table, and check that the measurements are within the standard value ranges.
5. If the measurements are outside the standard value range, remedy the problem while referring to the hydraulic pressure test diagnosis table.

NOTE
RC : Reverse clutch pressure port
TR : Torque converter pressure port
TA : Damper clutch pressure port
OC : Overdrive clutch pressure port
2B : Second brake pressure port
LB : Low & brake pressure port
UC : Underdrive clutch pressure port
RB : Reduction brake pressure port
DC : Direct clutch pressure port

## STANDARD HYDRAULIC PRESSURE TABLE

| Measurement conditions | | | Standard hydraulic pressure kPa | | | | | | | |
|---|---|---|---|---|---|---|---|---|---|---|
| Selector lever position | Shift range position | Engine speed r/min | Underdrive clutch pressure [UD pressure] | Reverse clutch pressure [RC pressure] | Overdrive clutch pressure [OD pressure] | Direct clutch pressure port [DIR pressure] | Low & brake pressure [LR pressure] | Second brake pressure [2ND pressure] | Reduction brake pressure [RB pressure] | Torque converter pressure [DR pressure] |
| P | - | 2,500 | - | - | - | - | 260 - 340 | - | 1,010 - 1,050 | 500 - 700 |
| R | Reverse | 2,500 | - | 1,270 - 1,770 | - | - | 1,270 - 1,770 | - | 1,270 - 1,770 | 500 - 700 |
| N | - | 2,500 | - | - | - | - | 260 - 340 | - | 260 - 340 | 500 - 700 |
| Sports mode | 1st | 2,500 | 1,010 - 1,050 | - | - | - | 1,010 - 1,050 | - | 1,010 - 1,050 | 500 - 700 |
| | 2nd | 2,500 | 1,010 - 1,050 | - | - | - | - | 1,010 - 1,050 | 1,010 - 1,050 | 500 - 700 |
| | 3rd | 2,500 | 784 - 882 | - | 784 - 882 | - | - | - | 784 - 882 | 450 - 650 |
| | 4th | 2,500 | 784 - 882 | - | 784 - 882 | 784 - 882 | - | - | - | - |
| | 5th | 2,500 | 784 - 882 | - | 784 - 882 | 784 - 882 | - | 784 - 882 | - | - |

Purchased from www.WorkshopManuals.co.uk

www.WorkshopManuals.co.uk

## HYDRAULIC PRESSURE TEST DIAGNOSIS TABLE

| Symptom | Problem location |
|---|---|
| All hydraulic pressures are too high | Malfunction of regulator valve |
| All hydraulic pressures are too low | Malfunction of oil pump<br>Blocked oil filter<br>Blocked oil cooler<br>Malfunction of regulator valve<br>Malfunction of relief valve<br>Incorrect valve body installation |
| Abnormal hydraulic pressure in R range only | Malfunction of regulator valve |
| Abnormal hydraulic pressure in 3rd or 4th only | Malfunction of regulator valve<br>Malfunction of switch bulb |
| Abnormal UD pressure only | Malfunction of oil seal K, L, M or Q<br>Malfunction of underdrive solenoid valve<br>Malfunction of underdrive pressure control valve<br>Abnormality with check ball<br>Blocked orifices<br>Incorrect valve body installation |
| Abnormal REV pressure only | Malfunction of oil seal A, B or C<br>Abnormality with check ball<br>Blocked orifices<br>Incorrect valve body installation |
| Abnormal OD pressure only | Malfunction of oil seal D, E or F<br>Malfunction of overdrive solenoid valve<br>Malfunction of overdrive pressure control valve<br>Abnormality with check ball<br>Blocked orifices<br>Incorrect valve body installation |
| Abnormal DIR pressure only | Malfunction of oil seal R, S or T<br>Malfunction of low & reverse solenoid valve (also used for the direct clutch)<br>Malfunction of low & reverse pressure control valve<br>Malfunction of switch bulb<br>Malfunction of fail-safe valve C<br>Blocked orifices<br>Incorrect valve body installation |
| Abnormal LR pressure only | Malfunction of oil seal I, J or P<br>Malfunction of low & reverse solenoid valve (also used for the direct clutch)<br>Malfunction of low & reverse pressure control valve<br>Malfunction of switch bulb<br>Malfunction of fail-safe valve A<br>Abnormality with check ball<br>Blocked orifices<br>Incorrect valve body installation |
| Abnormal 2ND pressure only | Malfunction of oil seal G, H or O<br>Malfunction of second solenoid valve<br>Malfunction of second pressure control valve<br>Malfunction of fail-safe valve B<br>Blocked orifices<br>Incorrect valve body installation |

Purchased from www.WorkshopManuals.co.uk

www.WorkshopManuals.co.uk

| Symptom | Problem location |
|---|---|
| Abnormal RED pressure only | Malfunction of oil seal U or V<br>Malfunction of reaction solenoid valve<br>Malfunction of reduction pressure control valve<br>Blocked orifices<br>Incorrect valve body installation |
| Abnormal DR pressure only | Blocked oil cooler<br>Malfunction of oil seal N<br>Malfunction of damper clutch control solenoid valve<br>Malfunction of damper clutch control solenoid valve<br>Malfunction of torque converter pressure control valve<br>Blocked orifices<br>Incorrect valve body installation |
| Pressure applied to non-operating element | Incorrect transmission control cable adjustment<br>Malfunction of manual valve<br>Incorrect valve body installation |

Purchased from www.WorkshopManuals.co.uk

www.WorkshopManuals.co.uk

**Oil seal layout**

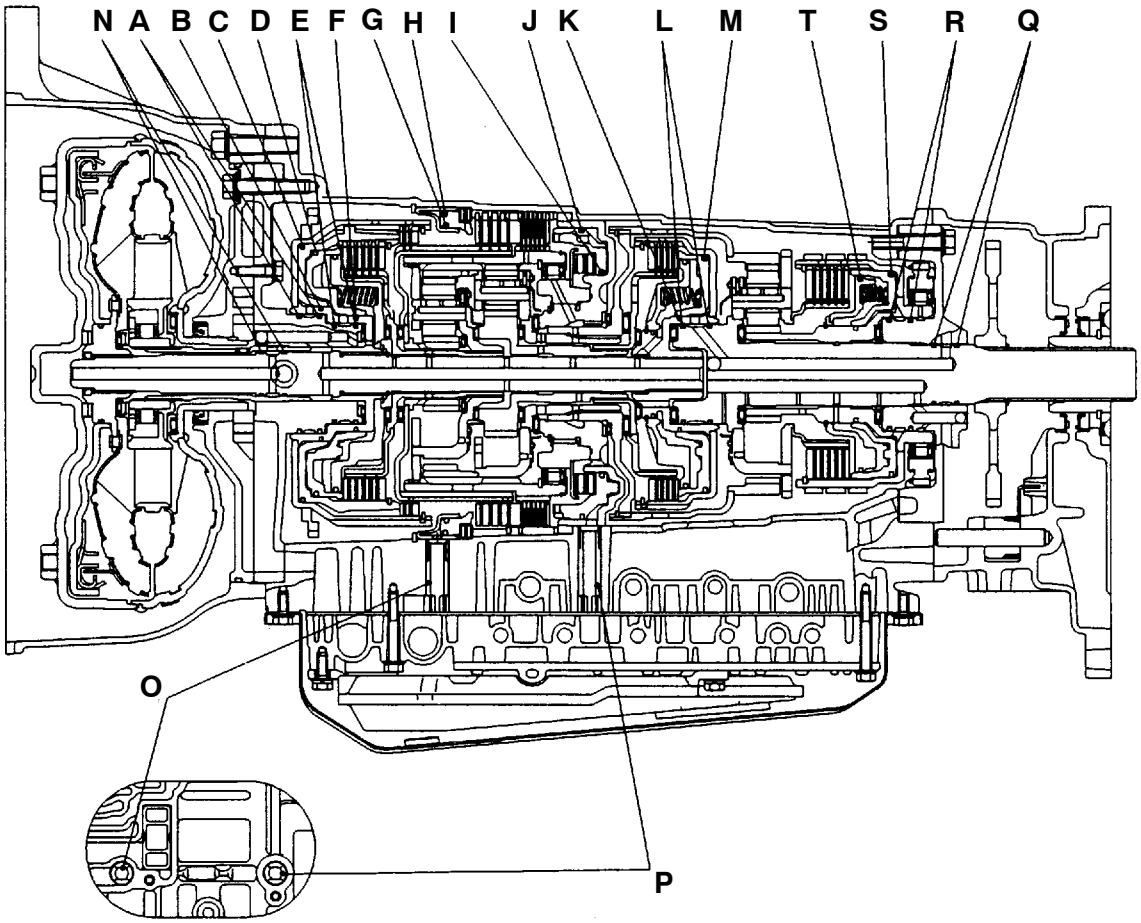


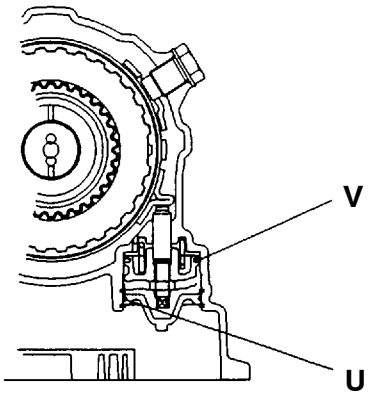


X0514GA

Purchased from www.WorkshopManuals.co.uk

www.WorkshopManuals.co.uk

## HYDRAULIC CIRCUIT

### Parking & Neutral

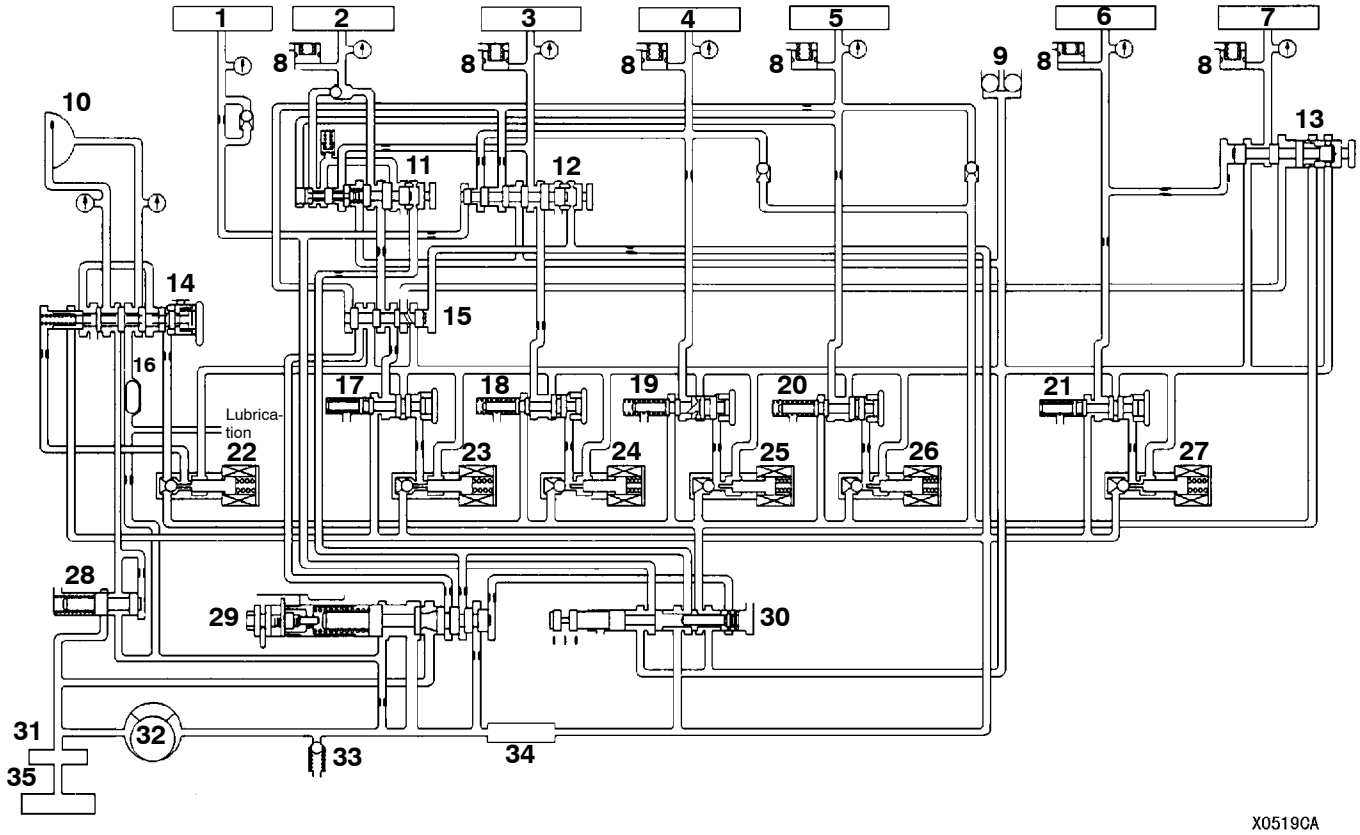


1. Reverse clutch
2. LR brake
3. 2nd brake
4. UD clutch
5. OD clutch
6. RED clutch
7. DIR clutch
8. Accumulator
9. Check ball
10. Damper clutch
11. Fail-safe valve A
12. Fail-safe valve B
13. Fail-safe valve C
14. Damper clutch control solenoid valve
15. Switch bulb
16. Oil cooler
17. LR pressure control valve
18. 2nd pressure control valve
19. UD pressure control valve
20. OD pressure control valve
21. RED pressure control valve
22. DCC solenoid valve
23. LR solenoid valve
24. 2ND solenoid valve
25. UD solenoid valve
26. OD solenoid valve
27. RED solenoid valve
28. Torque converter pressure control valve
29. Regulator valve
30. Manual valve
31. Oil filter
32 Oil pump
33. Relief valve
34. Oil strainer
35. Oil pan

Purchased from www.WorkshopManuals.co.uk

www.WorkshopManuals.co.uk

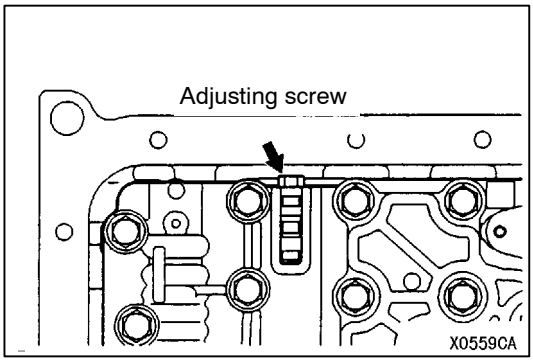


## LINE PRESSURE ADJUSTMENT

1. Discharge the ATF, and then remove the valve body cover.
2. Turn the adjusting screw shown in the illustration at left to adjust the UD pressure until it is at the standard value. The pressure increases when the screw is turned anti-clockwise.

   NOTE
   Adjust to the middle of the standard range when the transmission is at the 1st or 2nd gear.

   **Standard value: 1,010 - 1,050 kPa**

   **Change in pressure for a single full turn of the adjusting screw: 35 kPa**
3. Install the valve body cover, and then pour in the specified amount of ATF.
4. Carry out a fluid pressure test. (Refer to P.23-106.) Readjust if necessary.

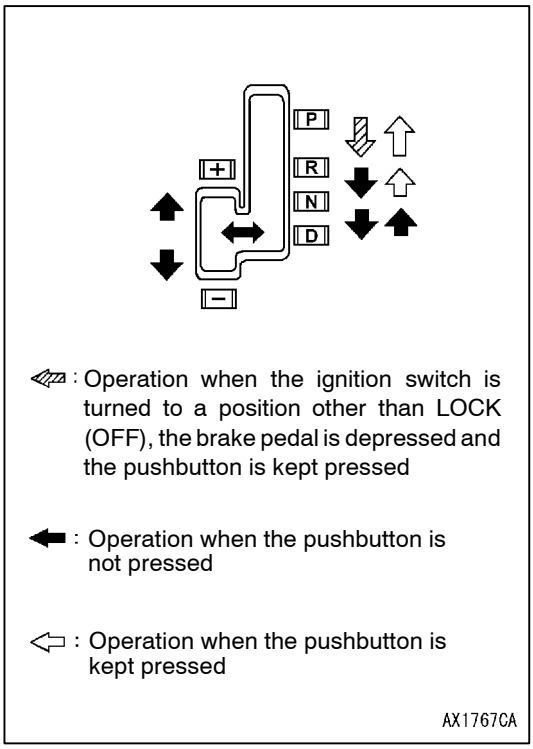


## SELECTOR LEVER OPERATION CHECK

1. Apply the parking brake, and check that the selector lever moves smoothly and accurately to each range position.
2. Check that the engine starts when the selector lever is at the N or P position, and that it does not start when the selector lever is in any other position.
3. Start the engine, release the parking brake, and check that the vehicle moves forward when the selector lever is moved from N range to 1st or 2nd gear, and that the vehicle reverses when the selector lever is moved to R range.
4. Stop the engine.
5. Turn the ignition switch to the ON position, and check that the backup lamp illuminates and the buzzer sounds when the selector lever is shifted from P to R range.

   NOTE
   The A/T mis-operation prevention mechanism is provided so that the selector lever cannot be moved from the P position if the ignition switch is at a position other than the LOCK (OFF) position and the brake pedal is not depressed.

Purchased from www.WorkshopManuals.co.uk

www.WorkshopManuals.co.uk

## KEY INTERLOCK MECHANISM CHECK

1. Carry out the following check.

| Inspection procedure | Inspection conditions | | Check details (Normal condition) |
|---|---|---|---|
| 1 | Brake pedal: Depressed | Ignition switch position: LOCK (OFF) or pulled out | The selector lever cannot be moved from the P position to any other position when the pushbutton on the selector lever is not being pressed. |
| 2 | | Ignition switch position: Other than “LOCK (OFF) or pulled out” | The selector lever can easily be moved from the P position to some other position when the pushbutton on the selector lever is being pressed. |
| 3 | Brake pedal: Released | Selector lever position: Other than “P” | The ignition switch will not turn to the LOCK position. |
| 4 | | Selector lever position: “P” | The ignition switch can turn smoothly to the LOCK (OFF) position. |

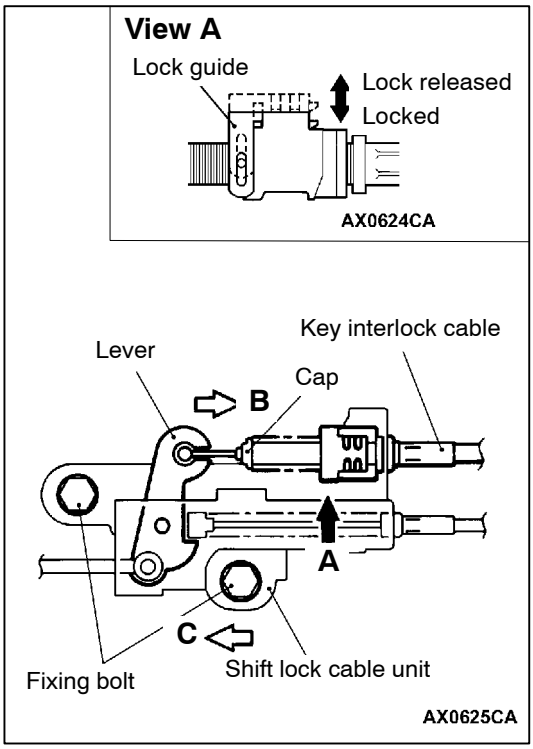


2. If the above operations do not occur correctly, adjust the shift lock cable unit by the following procedure.
   (1) Remove the front floor console, and then provisionally install the selector lever knob. (Refer to GROUP 52A.)
   (2) Move the selector lever to the P position and turn the ignition switch to the LOCK (OFF) position.
   (3) Loosen the shift lock cable unit fixing bolt, and then while pushing the lever in the direction of B and the unit in direction of C, tighten the bolt to the specified torque of 5.0 ± 1.0 N·m.
   (4) Lift the lock guide to unlock the key interlock cable.
   (5) While pushing the cap of the key interlock cable in the direction of B, lower the lock guide to lock the cable.

   NOTE
   The lock position at this time (the amount by which the cap is pushed) represents the amount of adjustment for the key interlock cable. If the key interlock cable does not operate correctly, adjust the lock position.

3. After adjusting, check the operation once more. If the operation is still incorrect, replace the shift lock cable unit. (Refer to P.23-120)

Purchased from www.WorkshopManuals.co.uk

www.WorkshopManuals.co.uk

## SHIFT LOCK MECHANISM CHECK

1. Carry out the following check.

| Inspection procedure | Inspection conditions | | Check details (Normal condition) |
|---|---|---|---|
| 1 | Brake pedal: Depressed | Ignition switch position: ”ACC” | The selector lever cannot be moved from the P position to any other position when the pushbutton on the selector lever is not being pressed. |
| 2 | | | The selector lever can easily be moved from the P position to some other position when the pushbutton on the selector lever is being pressed. |
| 3 | Brake pedal: Released | | The selector lever can easily be moved from the R position to the P position when the pushbutton on the selector lever is being pressed. |

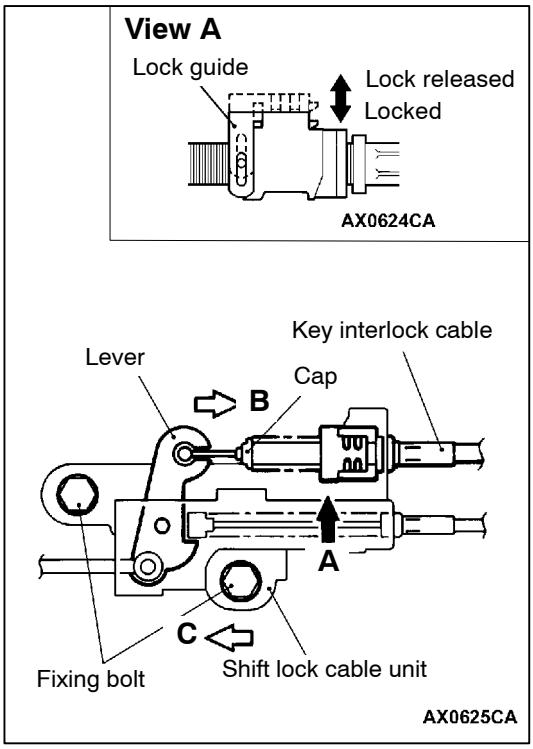


2. If the above operations do not occur correctly, adjust the shift lock cable unit by the following procedure.
   (1) Remove the front floor console, and then provisionally install the selector lever knob.(Refer to GROUP 52A.)
   (2) Move the selector lever to the P position and turn the ignition switch to the LOCK (OFF) position.
   (3) Loosen the shift lock cable unit fixing bolt, and then while pushing the lever in the direction of B and the unit in direction of C, tighten the bolt to the specified torque of 5.0 ± 1.0 N·m.
   (4) Lift the lock guide to unlock the key interlock cable.
   (5) While pushing the cap of the key interlock cable in the direction of B, lower the lock guide to lock the cable.

   NOTE
   The lock position at this time (the amount by which the cap is pushed) represents the amount of adjustment for the key interlock cable. If the key interlock cable does not operate correctly, adjust the lock position.

3. After adjusting, check the operation once more. If the operation is still incorrect, replace the shift lock cable unit. (Refer to P.23-120)

Purchased from www.WorkshopManuals.co.uk

www.WorkshopManuals.co.uk

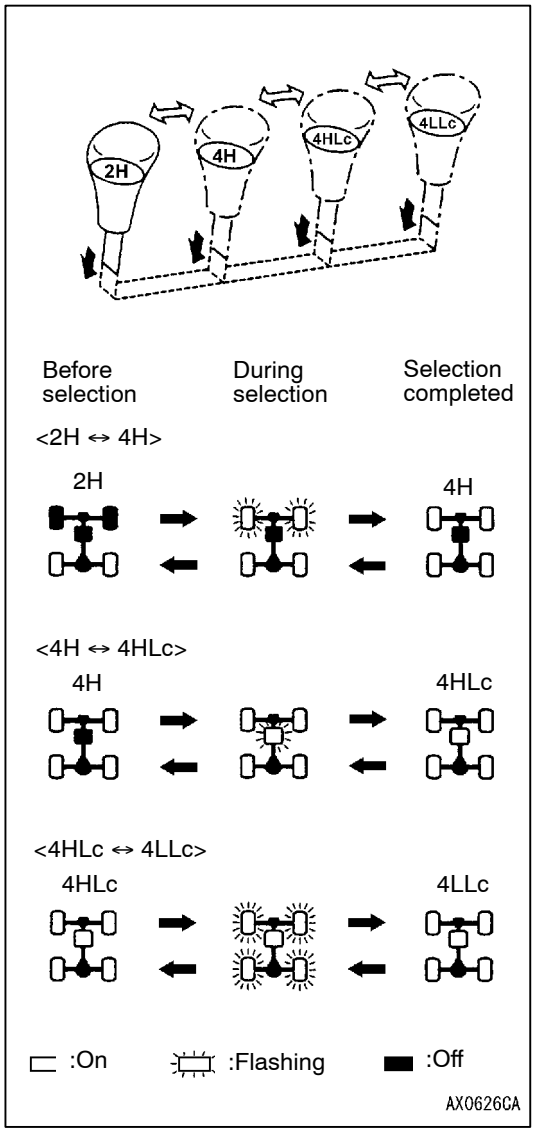


## TRANSFER SHIFT LEVER OPERATION CHECK

1. Check that the transfer shift lever moves smoothly and correctly to each transfer position when the lever is pushed downwards and moved.
2. Apply the parking brake, turn the ignition switch to the ON position and move the selector lever to N range.
3. Check that the 4WD indicator lamp illuminates, flashes or switches off according to the pattern shown in the illustration when the transfer shift lever is move to each transfer position.
4. If the selection is not completed even after 5 seconds or more have passed, carry out the following procedure.
   (1) Return the transfer shift lever to the position it was at before selection.
   (2) Start the engine, drive the vehicle straight forward, and then stop the engine.
   (3) Apply the parking brake, and then move the selector lever to the N position.
   (4) Operate the transfer shift lever once more.

   NOTE
   If the vehicle is not fully stopped or if the selector lever is at a position other than N when selecting 4HLc or 4LLc, the 4WD indicator lamp will flash more quickly than normal, and the 4WD range will not be selected. This is a normal phenomenon which serves to control the smooth selection of 4HLc and 4LLc.

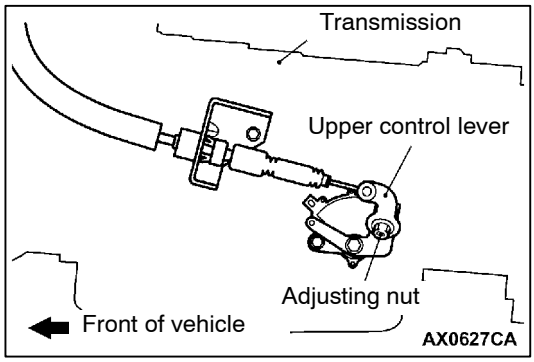


## TRANSMISSION CONTROL CABLE ADJUSTMENT

1. Move the selector lever to the N position.
2. Loosen the upper control lever adjusting nut.
3. Check that the inhibitor switch is at N range.
4. Adjust the upper control lever so that there is no slackness or excessive tightness in the transmission control cable, and then tighten the adjusting nut to the specified torque.

   **Tightening torque: 24 ± 4 N·m**
5. Check that the transmission shifts to the correct range corresponding to the position of the selector lever, and that it functions correctly in that range.

Purchased from www.WorkshopManuals.co.uk

www.WorkshopManuals.co.uk

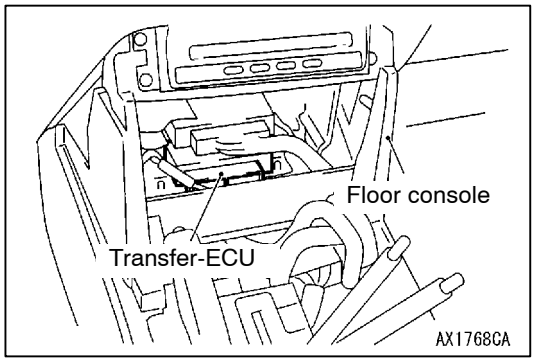


## TRANSFER-ECU CHECK

1. Remove the indicator panel and the floor console front panel. (Refer to GROUP 52A - Floor Console.)
2. Measure the transfer-ECU terminal voltage. (Refer to P.23-89.)

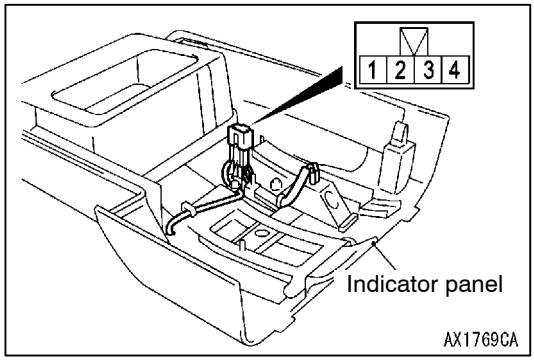


## POSITION INDICATOR LAMP CHECK

1. Remove the indicator panel. (Refer to GROUP 52A - Floor Console.)
2. Check that there is continuity between terminals (1) and (2) and between terminals (3) and (4).

Purchased from www.WorkshopManuals.co.uk

www.WorkshopManuals.co.uk

# TRANSMISSION CONTROL

## REMOVAL AND INSTALLATION

NOTE
When removing and installing the transmission control cable and shift lock cable unit, be careful not to hit them against the SRS-ECU.

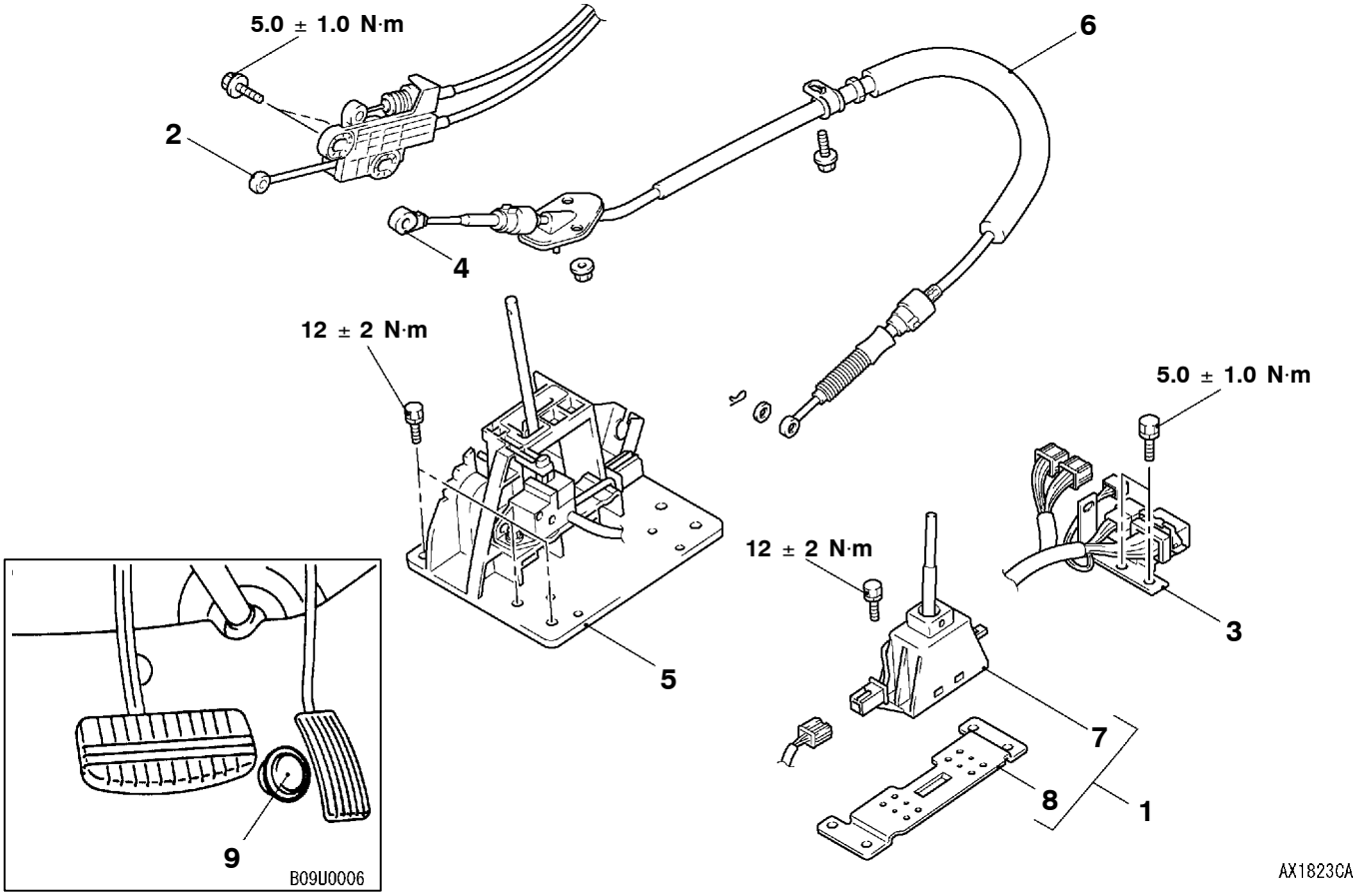


**Selector lever assembly and transmission control cable assembly removal steps**

- Front floor console (Refer to GROUP 52A.)
1. Transfer shift lever and bracket assembly
▶B◀ 2. Shift lock cable unit connection
3. Transmission control harness connection
4. Transmission control cable connection
5. Selector lever assembly
- Front exhaust pipe (Refer to GROUP 15.)

◀A▶ ▶A◀ 6. Transmission control cable assembly

**Transfer shift lever removal steps**

- Indicator panel (Refer to GROUP 52A - Floor Console.)
7. Transfer shift lever
8. Bracket

**Wide open throttle switch removal step**

9. Wide open throttle switch

Purchased from www.WorkshopManuals.co.uk

www.WorkshopManuals.co.uk

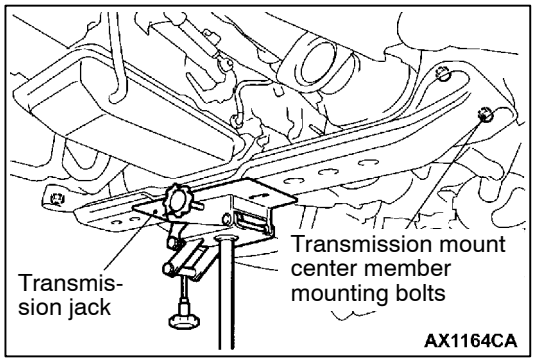


## REMOVAL SERVICE POINT

### ◀A▶ TRANSMISSION CONTROL CABLE ASSEMBLY REMOVAL

1. Support the transmission mount center member with a transmission jack, and then remove the transmission mount center member mounting bolts.
2. Lower the transmission so that there is enough room available to remove the transmission control cable assembly mounting nuts, and then remove the transmission control cable assembly mounting nuts.

## INSTALLATION SERVICE POINTS

### ▶A◀ TRANSMISSION CONTROL CABLE ASSEMBLY INSTALLATION

After installing the transmission control cable assembly, install the transmission mount center member mounting bolts and tighten them to the specified torque of 44 ± 10 N·m.

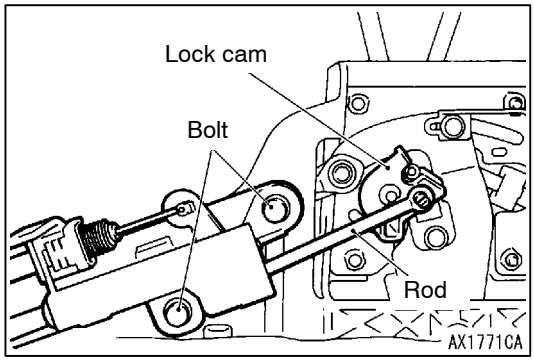


### ▶B◀ SHIFT LOCK CABLE UNIT INSTALLATION

1. Provisionally install the selector lever knob, and then move the selector lever to the P position and turn the ignition switch to the LOCK (OFF) position.
2. After installing the rod of the shift lock cable unit to the lock cam of the selector lever assembly, install the bolts of the shift lock cable unit.
3. Check the operation of the selector lever assembly. (Refer to P.23-111.)

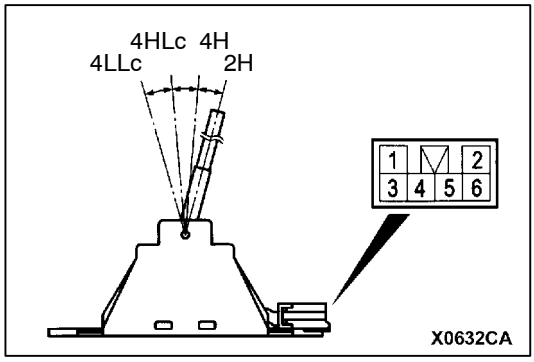


## INSPECTION

### TRANSFER SHIFT LEVER SWITCH CONTINUITY CHECK

| Switch position | Terminal No. | | | | |
|---|---|---|---|---|---|
| | 1 | 2 | 3 | 4 | 5 |
| 2H | ○ | | ○ | | |
| 4H | ○ | | | ○ | |
| 4HLc | ○ | | | | ○ |
| 4LLc | ○ | ○ | | | |

Purchased from www.WorkshopManuals.co.uk

www.WorkshopManuals.co.uk

## SELECTOR LEVER ASSEMBLY
## DISASSEMBLY AND REASSEMBLY

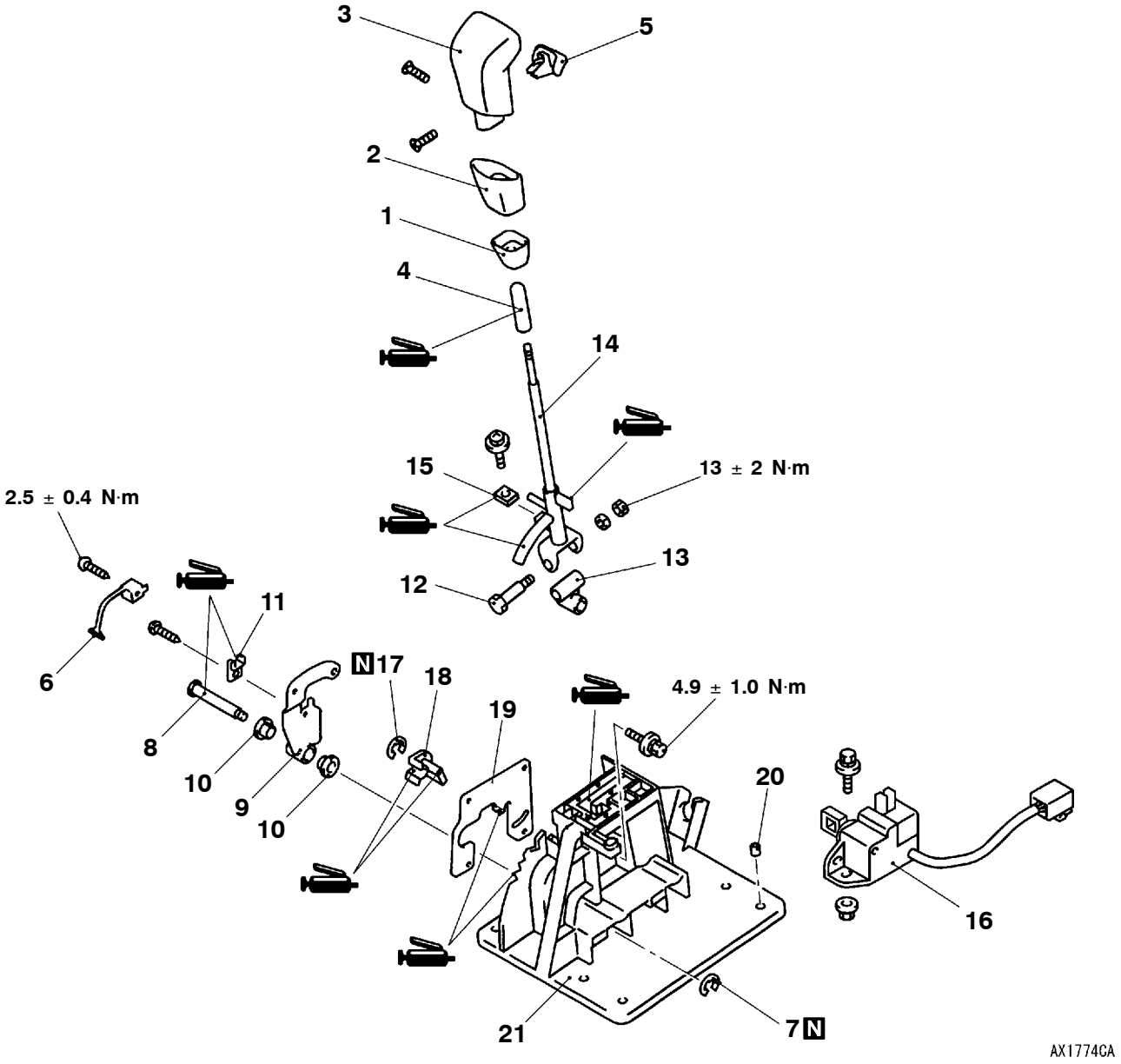


**Disassembly steps**

1. Knob cover B
2. Knob cover A
3. Shift knob
4. Sleeve
5. Pushbutton
6. Detent spring
7. Snap ring
8. Shaft
9. Arm assembly
10. Bushing
11. Arm cover
12. Bolt
13. Universal joint
14. Lever assembly
15. Stay cover
16. Shift switch assembly
17. Snap ring
18. Malfunction of lock cam
19. Detent plate assembly
20. Collar
21. Base bracket

Purchased from www.WorkshopManuals.co.uk

www.WorkshopManuals.co.uk

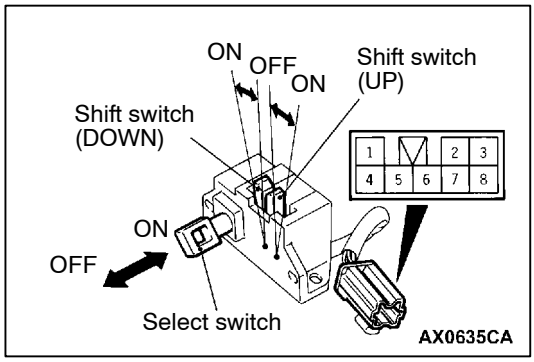


## INSPECTION

### SHIFT SWITCH ASSEMBLY CONTINUITY CHECK

| Switch position | | Terminal No. | | | | | |
|---|---|---|---|---|---|---|---|
| | | 1 | 3 | 4 | 5 | 7 | 8 |
| Select switch | ON | ○ | | ○ | | | |
| | OFF | ○ | | | ○ | | |
| Shift switch (UP) | ON | | ○ | | | ○ | |
| | OFF | | | | | | |
| Shift switch (DOWN) | ON | | ○ | | | | ○ |
| | OFF | | | | | | |

Purchased from www.WorkshopManuals.co.uk

www.WorkshopManuals.co.uk

# SHIFT LOCK AND KEY INTERLOCK MECHANISMS

## REMOVAL AND INSTALLATION

NOTE
When removing and installing the transmission control cable and shift lock cable unit, be careful not to hit them against the SRS-ECU.

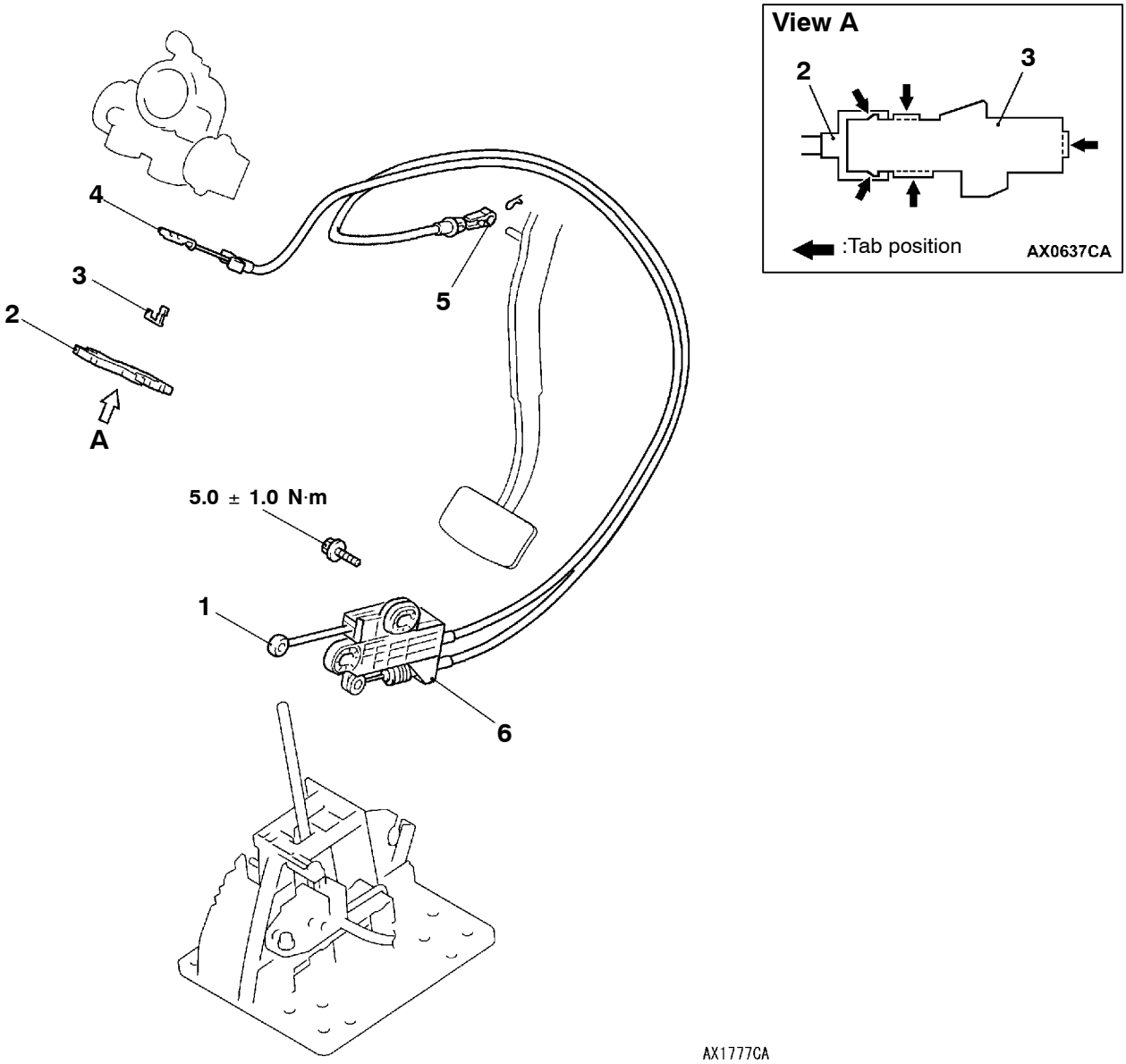


**Removal steps**

- Front floor console (Refer to GROUP 52A.)
- Switch panel and lower column cover (Refer to GROUP 52A - Instrument Panel.)

▶A◀ 1. Shift lock cable unit connection

◀A▶ 2. Key interlock cable connection
3. Cover
4. Lock bar
5. Shift lock cable connection
6. Shift lock cable unit

Purchased from www.WorkshopManuals.co.uk

www.WorkshopManuals.co.uk

## REMOVAL SERVICE POINT

### ◀A▶ KEY INTERLOCK CABLE REMOVAL

Turn the ignition switch to the ACC position, and then pull the key interlock cable out from the ignition key cylinder.

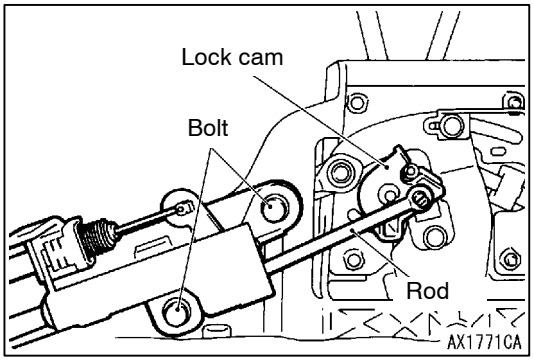


## INSTALLATION SERVICE POINT

### ▶A◀ SHIFT LOCK CABLE UNIT INSTALLATION

1. Provisionally install the selector lever knob, and then move the selector lever to the P position and turn the ignition switch to the LOCK (OFF) position.
2. After installing the rod of the shift lock cable unit to the lock cam of the selector lever assembly, install the bolts of the shift lock cable unit.
3. Check the operation of the selector lever assembly.(Refer to P.23-111.)

Purchased from www.WorkshopManuals.co.uk

www.WorkshopManuals.co.uk

# TRANSMISSION ASSEMBLY

## REMOVAL AND INSTALLATION

NOTE
The rear propeller shaft incorporates a carbon fibre-reinforced plastic tube, so be sure to refer to GROUP 25 during removal.

**<6G7>**

**Pre-removal and Post-installation Operations**
- Skid Plate And Under Cover Removal and Installation
- Transmission Fluid and Transfer Oil Draining and Filling (Refer to P.23-95 and P.23-99.)
- Front and Rear Propeller Shaft Removal and Installation (Refer to GROUP 25.)
- Front Exhaust Pipe Removal and Installation (Refer to GROUP 15.)
- Radiator Shroud Lower Cover Removal and Installation (Refer to GROUP 14.)

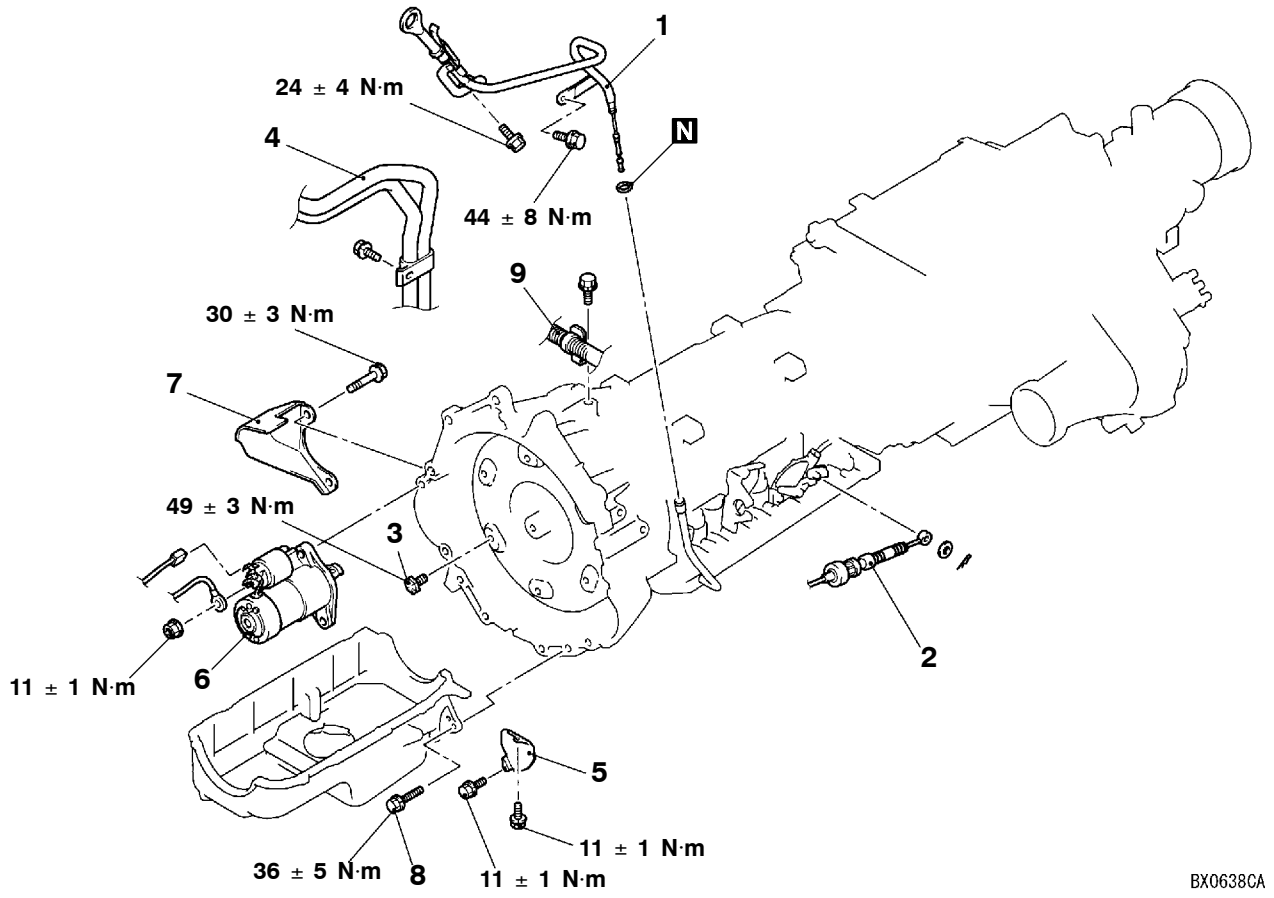


**Removal steps**

1. Oil level gauge assembly
2. Transmission control cable connection
3. Drive plate connection bolts
4. Heater hose connection
5. Cover
6. Starter motor
7. Starter cover
8. Oil pan connection bolts
9. Battery cable connection

◀A▶

Purchased from www.WorkshopManuals.co.uk

www.WorkshopManuals.co.uk

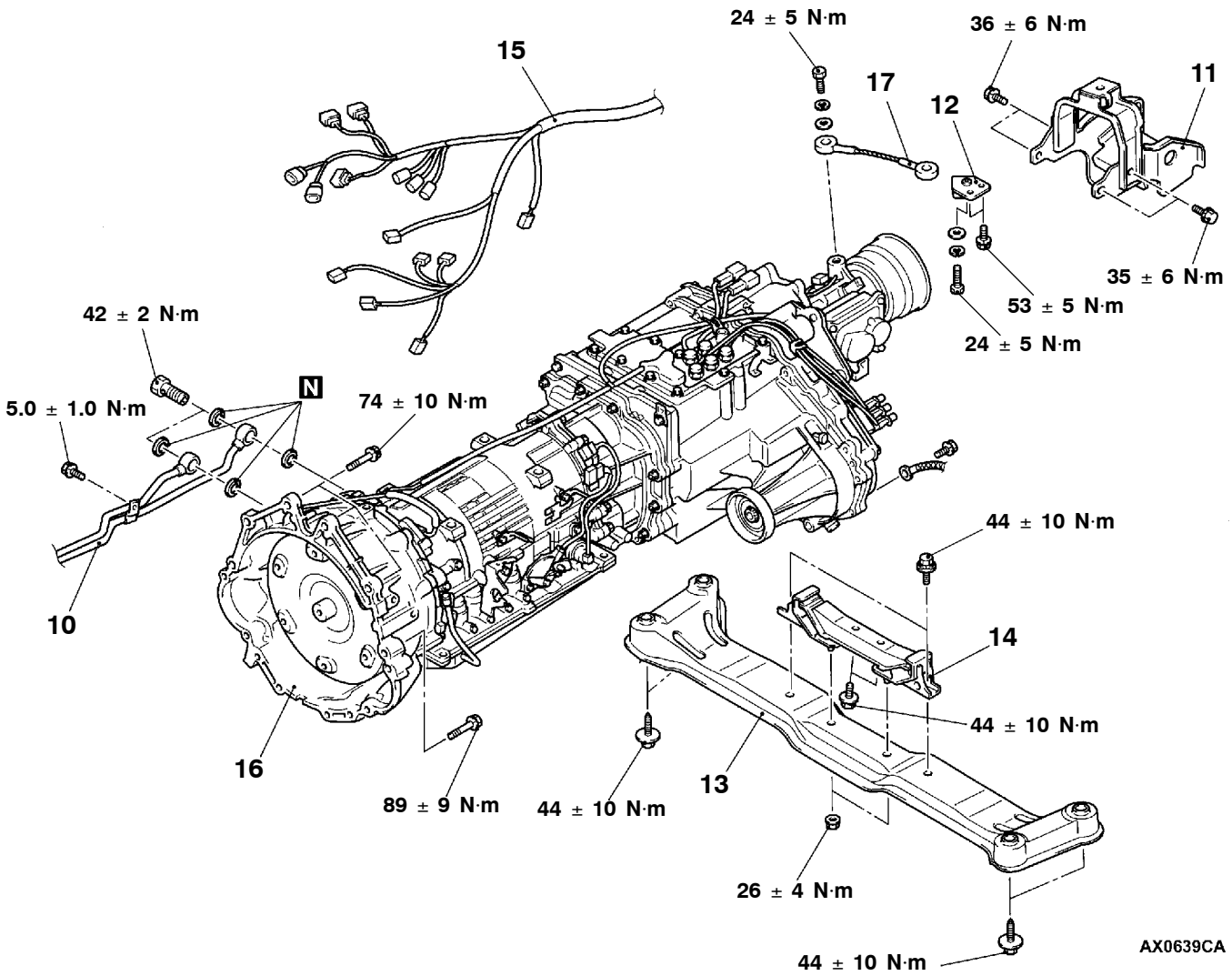


10. Oil cooler tube connection
11. Dynamic damper
12. Tension wire bracket
    - Support the transmission with a transmission jack
13. Transmission mount center member assembly
14. Transmission mount insulator assembly
15. Transmission harness connector connection
16. Transmission assembly
17. Tension wire

◀B▶
▶A◀

Purchased from www.WorkshopManuals.co.uk

www.WorkshopManuals.co.uk

<4M4>

**Pre-removal and Post-installation Operations**
- Skid Plate and Under Cover Removal and Installation
- Transmission Fluid and Transfer Oil Draining and Filling (Refer to P.23-95 and P.23-99.)
- Front and Rear Propeller Shaft Removal and Installation (Refer to GROUP 25.)
- Front Exhaust Pipe and Catalytic Converter Removal and Installation (Refer to GROUP 15.)
- Radiator Shroud Lower Cover Removal and Installation (Refer to GROUP 14.)
- Intercooler Assembly Removal and Installation (Refer to GROUP 15.)

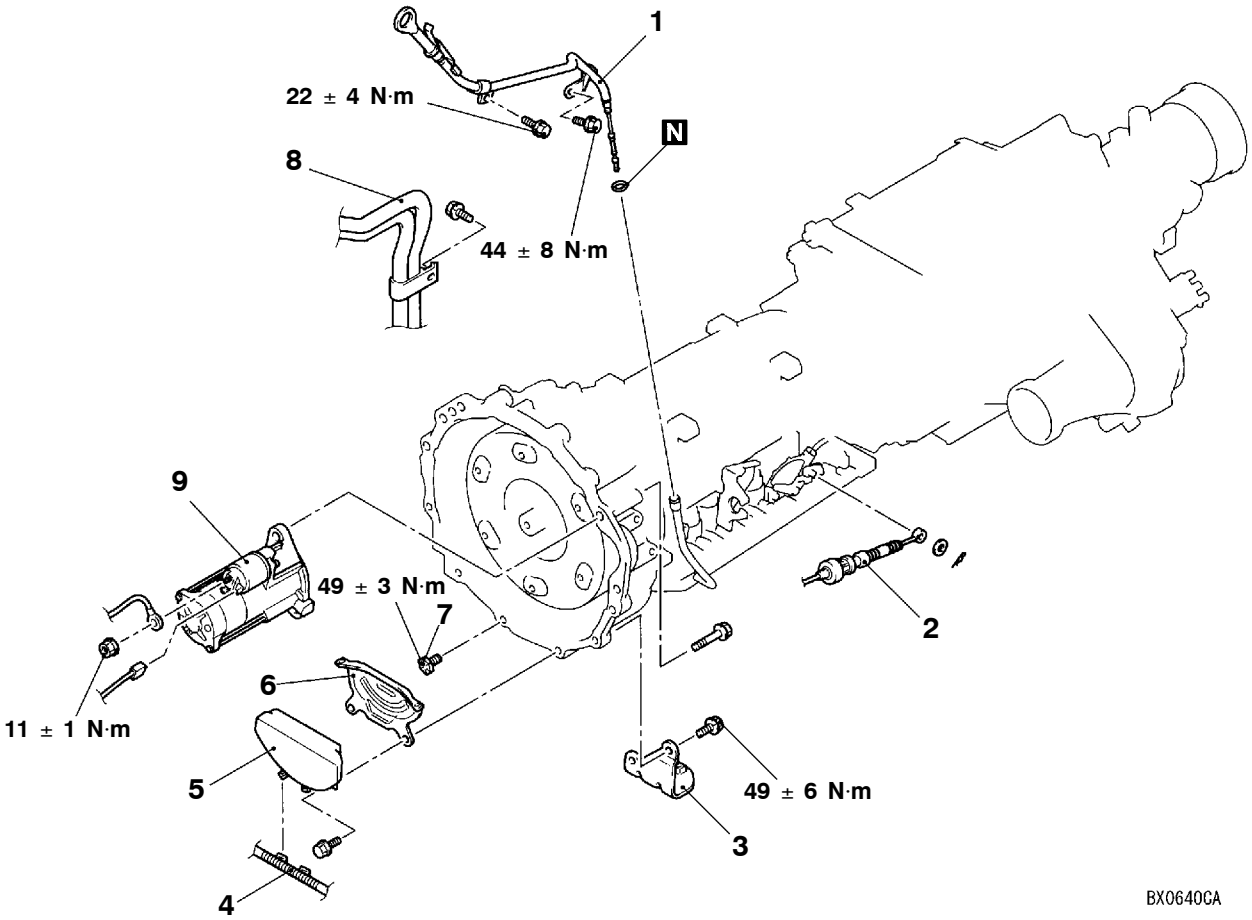


**Removal steps**

1. Oil level gauge assembly
2. Transmission control cable connection ◀A▶
3. Exhaust support bracket
4. Battery cable connection
5. Spacing rubber
6. Dust cover
7. Drive plate connection bolts
8. Heater hose connection
9. Starter motor

Purchased from www.WorkshopManuals.co.uk

www.WorkshopManuals.co.uk

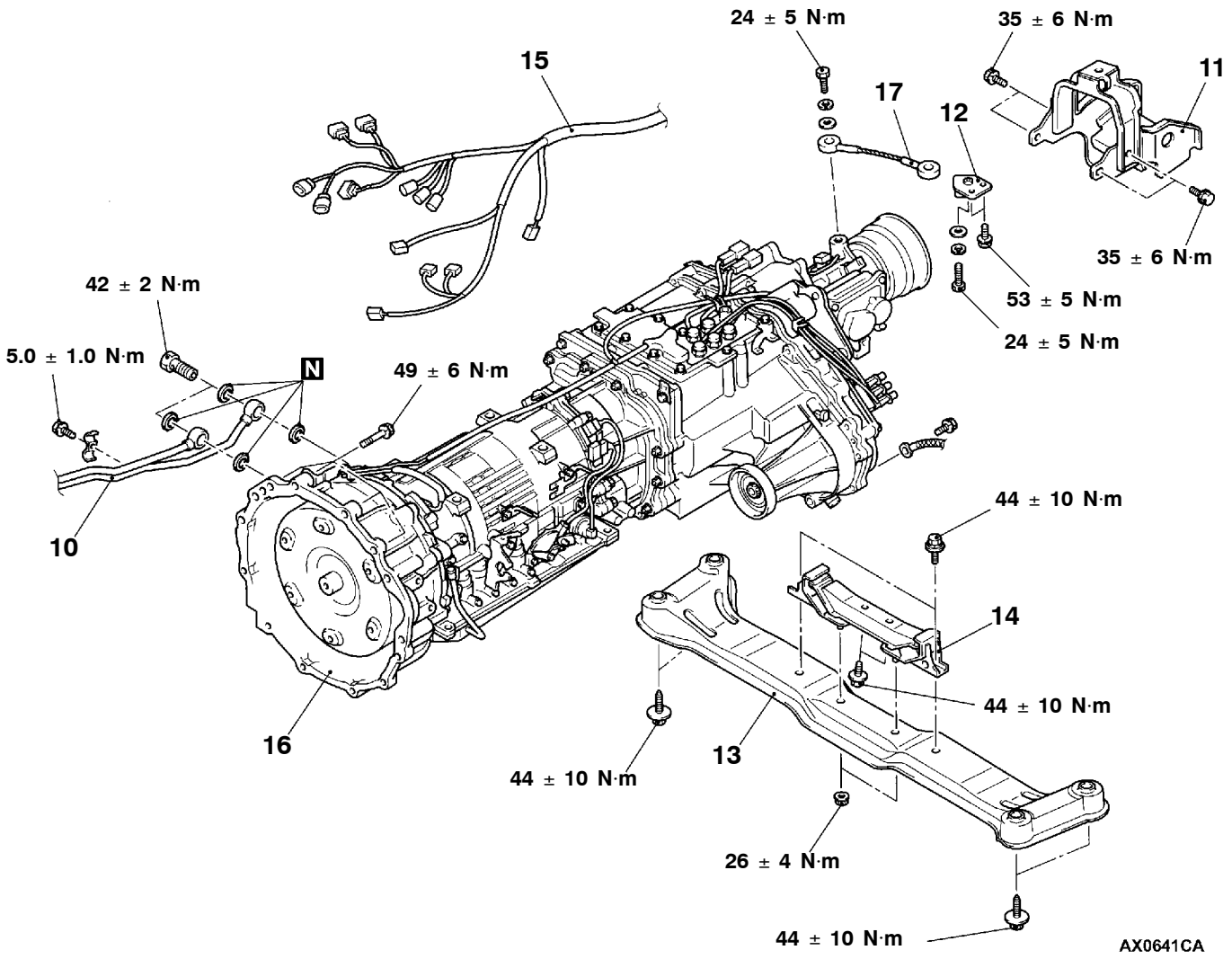


10. Oil cooler tube connection
11. Dynamic damper
12. Tension wire bracket
    - Support the transmission with a transmission jack
13. Transmission mount center member assembly
14. Transmission mount insulator assembly
15. Transmission harness connector connection
16. Transmission assembly
17. Tension wire

◀B▶

▶A◀

## REMOVAL SERVICE POINTS

### ◀A▶ DRIVE PLATE CONNECTION BOLT REMOVAL

1. While turning the crankshaft, remove the six connection bolts.
2. Push the torque converter towards the transmission so that none of it is near the engine.

Purchased from www.WorkshopManuals.co.uk

www.WorkshopManuals.co.uk

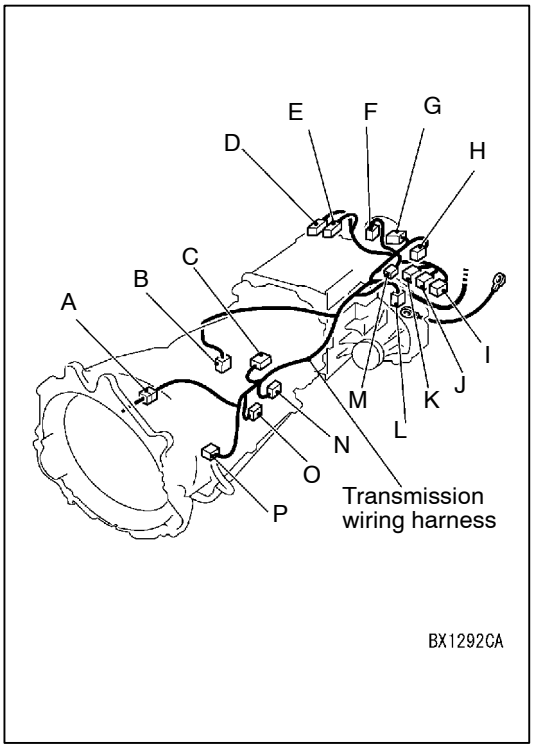


### ◀B▶ TRANSMISSION HARNESS CONNECTOR DISCONNECTION

1. Lower the transmission to a position where the transmission harness connector can be disconnected, and then disconnect the connector.

| Symbol | Connector name |
|---|---|
| A | Transmission wiring harness and battery wiring harness combination |
| B | Output shaft speed sensor |
| C | A/T control solenoid valve assembly |
| D | 4LLc (Direct low range 4WD) switch |
| E | 2WHEY operation detection switch |
| F | Rear propeller shaft speed sensor |
| G | Vehicle speed sensor |
| H | Shift actuator |
| I | 2WHEY/4WD detection switch |
| J | 4H (Full time 4WD) detection switch |
| K | Center differential lock detection switch |
| L | Front propeller shaft speed sensor |
| M | Oxygen sensor (Rear) |
| N | Inhibitor switch |
| O | Oxygen sensor (Front) |
| P | Input shaft speed sensor |

2. Place the disconnected transmission harness so that it stays on the vehicle body.

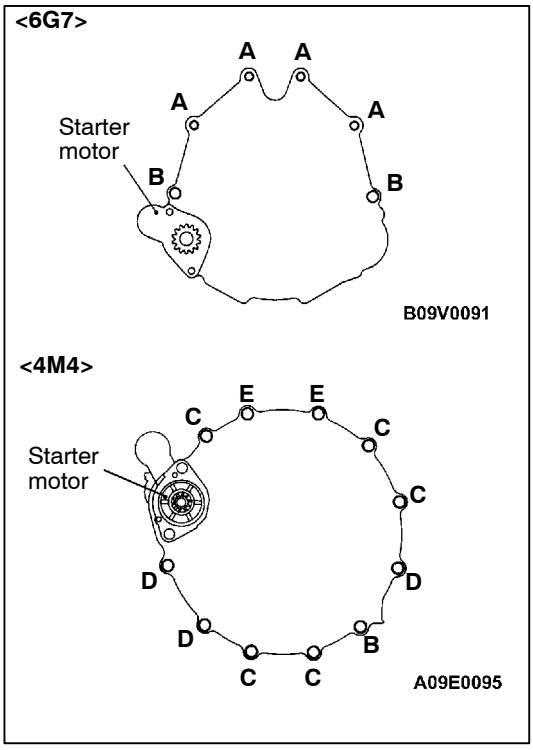


## INSTALLATION SERVICE POINTS

### ▶A◀ TRANSMISSION ASSEMBLY INSTALLATION

The bolt lengths differ according to where they are to be installed, so do not install them in the wrong place.

**<6G7>**

| Bolts | d × l mm |
|---|---|
| A | 12 × 40 |
| B | 12 × 55 |

**<4M4>**

| Bolts | d × l mm |
|---|---|
| C | 10 × 25 |
| D | 10 × 45 |
| E | 10 × 50 |

Purchased from www.WorkshopManuals.co.uk

www.WorkshopManuals.co.uk

# TRANSMISSION OIL COOLER

## REMOVAL AND INSTALLATION

**Pre-removal and Post-installation Operations**
- Transmission Fluid Draining and Filling (Refer to P.23-95 and P.23-99.)
- Skid Plate and Under Cover Removal and Installation

**<6G7>**

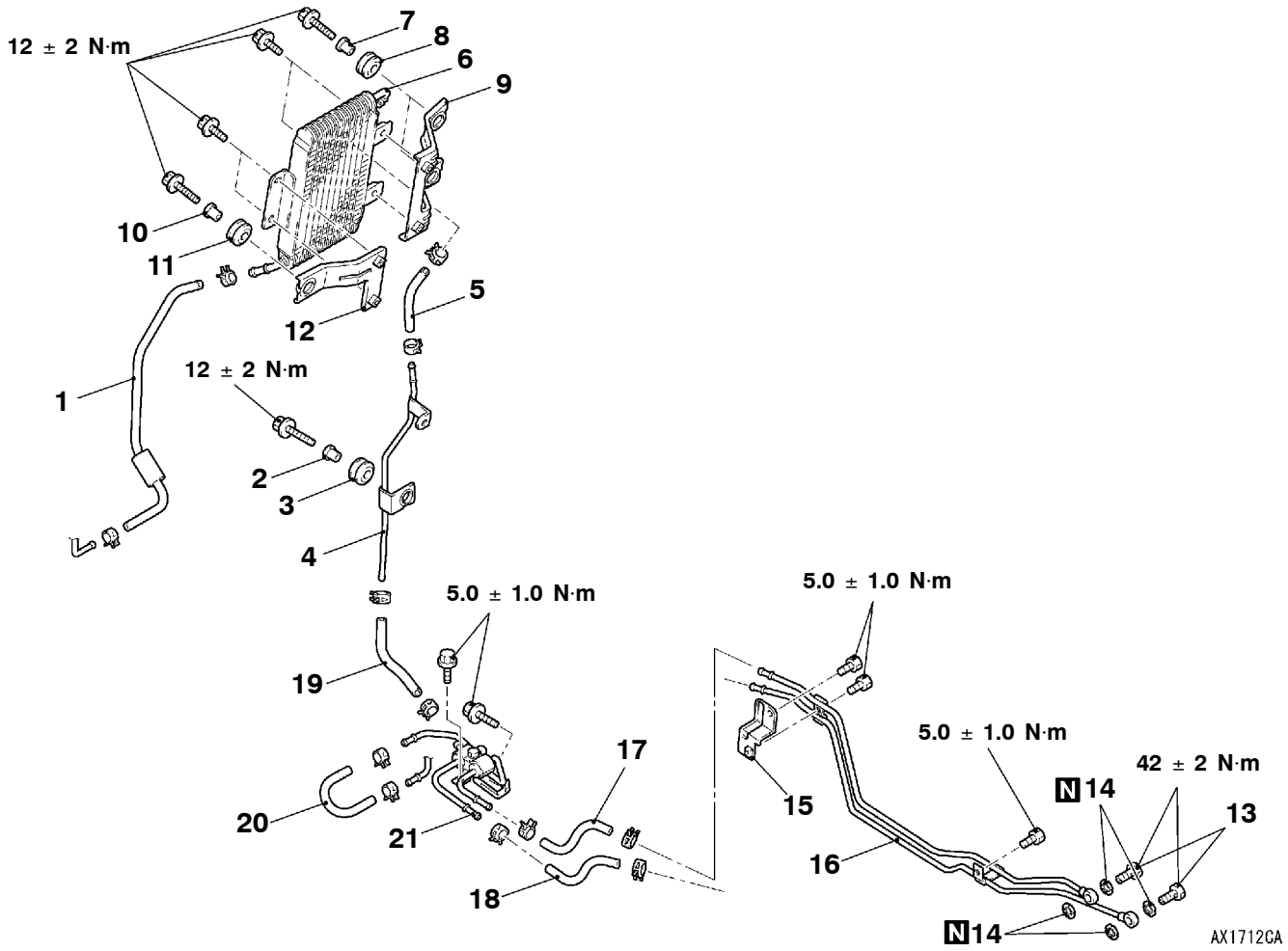


**Transmission oil cooler removal steps**

1. Hose
2. Distance piece
3. Bushing
4. Transmission oil return tube
5. Hose
6. Distance piece
   - Headlight assembly (Refer to GROUP 54A.)
7. Bushing
8. Transmission oil cooler bracket
9. Distance piece
10. Bushing
11. Transmission oil cooler bracket
12. Transmission oil cooler

**Transmission oil cooler tube assembly removal steps**

▶B◀ 13. Eye bolt
▶B◀ 14. Gasket
15. Transmission oil cooler tube bracket
▶B◀ 16. Transmission oil cooler tube assembly
▶A◀ 17. Return hose
▶A◀ 18. Feed hose
19. Hose
20. Hose
21. Transmission oil cooler tube assembly

Purchased from www.WorkshopManuals.co.uk

www.WorkshopManuals.co.uk

<4M4>

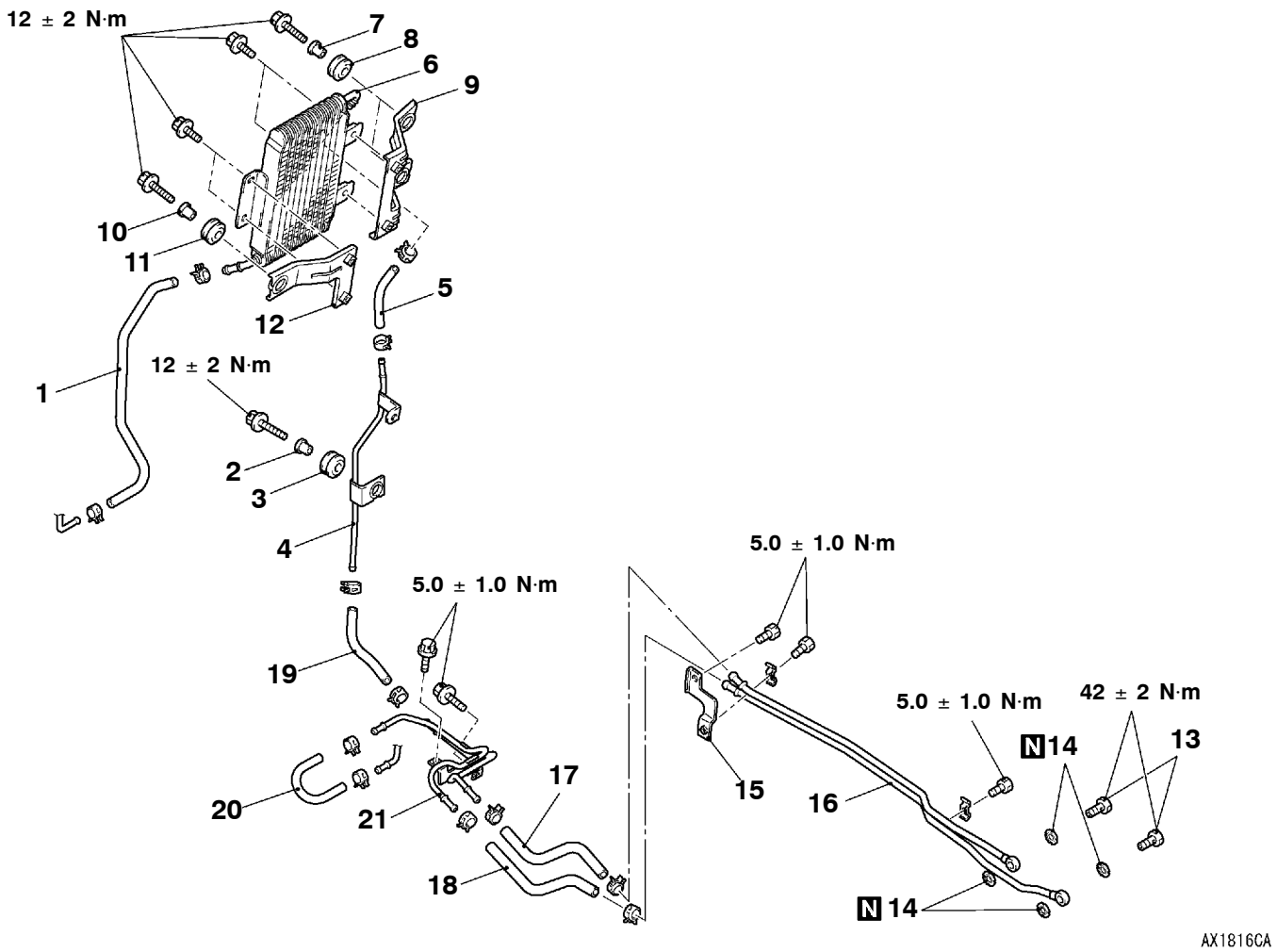


**Transmission oil cooler removal steps**

1. Hose
2. Distance piece
3. Bushing
4. Transmission oil return tube
5. Hose
6. Distance piece
- Headlight assembly (Refer to GROUP 54A.)
7. Bushing
8. Transmission oil cooler bracket
9. Distance piece
10. Bushing
11. Transmission oil cooler bracket
12. Transmission oil cooler

**Transmission oil cooler tube assembly removal steps**

▶B◀ 13. Eye bolt
▶B◀ 14. Gasket
15. Transmission oil cooler tube bracket
▶B◀ 16. Transmission oil cooler tube assembly
▶A◀ 17. Return hose
▶A◀ 18. Feed hose
19. Hose
20. Hose
21. Transmission oil cooler tube assembly

Purchased from www.WorkshopManuals.co.uk

www.WorkshopManuals.co.uk

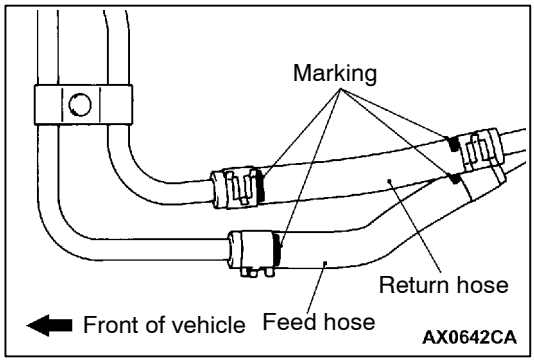


## INSTALLATION SERVICE POINTS

### ▶A◀ FEED HOSE/RETURN HOSE INSTALLATION

Install the feed hose and return hose so that the markings are positioned as shown in the illustration.

### ▶B◀ TRANSMISSION OIL COOLER TUBE ASSEMBLY/ GASKET/ EYE BOLT INSTALLATION

Provisionally tighten the eye bolts onto the transmission and provisionally secure the pipes with the clamps, and then fully tighten the eye bolts.
Furthermore, tighten the clamps in order starting from the one closest to the transmission.

# A/T-ECU

## REMOVAL AND INSTALLATION

<6G7> Refer to GROUP 13A - Engine-A/T-ECU; <4M4>Refer to GROUP 13C - Engine-ECU.

## INSPECTION

### ECU TERMINAL VOLTAGE MEASUREMENT

<6G7>Refer to P.23-64; <4M4>Refer to P.23-66.

Purchased from www.WorkshopManuals.co.uk

www.WorkshopManuals.co.uk

# TRANSFER-ECU

## REMOVAL AND INSTALLATION

**Pre-removal and Post-installation Operations**
Indicator Panel and Floor Console Front Panel Removal and Installation (Refer to GROUP 52A - Floor Console.)

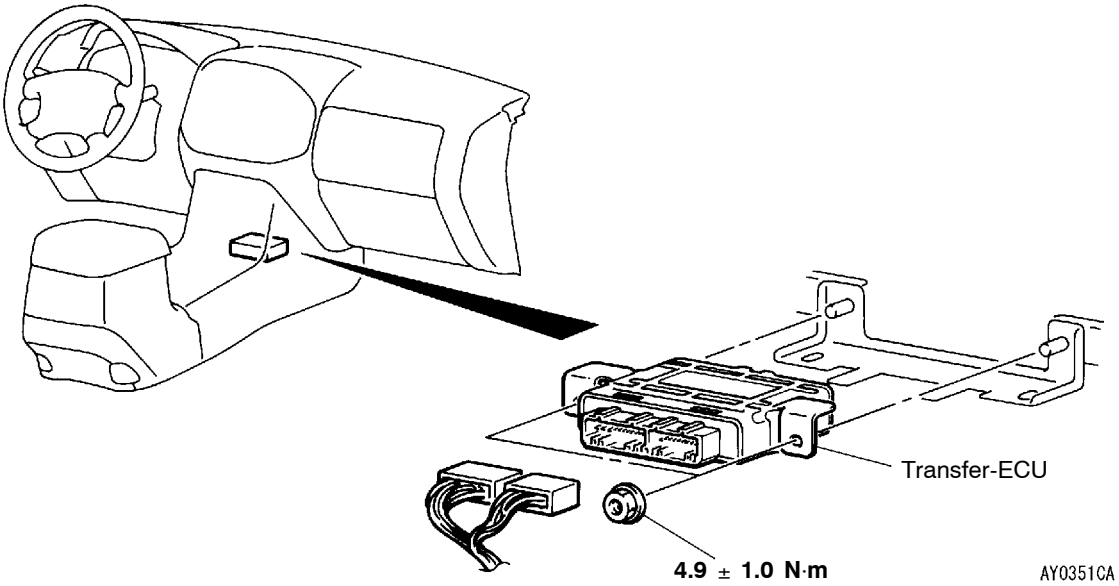


## INSPECTION

### ECU TERMINAL VOLTAGE MEASUREMENT

Refer to P.23-89.

Purchased from www.WorkshopManuals.co.uk

www.WorkshopManuals.co.uk

# Service Bulletins

**Click on the applicable bookmark to select the Service Bulletin.**

Purchased from www.WorkshopManuals.co.uk

www.WorkshopManuals.co.uk

MITSUBISHI MOTORS

# SERVICE BULLETIN

TECHNICAL SERVICE PLANNING
INTERNATIONAL CAR ADMINISTRATION OFFICE. MITSUBISHI MOTORS CORPORATION

| SERVICE BULLETIN | NO. : MSB-01E23-501 | |
|---|---|---|
| | DATE : 2001-3-20 | <MODEL> (EC)PAJERO/MONTERO(V60,70) <M/Y> 01-10 |
| SUBJECT : CORRECTION TO TRANSMISSION REMOVAL STEPS | | |
| GROUP : AUTOMATIC TRANSMISSION | DRAFTNO. : 00SY122809 | |
| CORRECTION | INTERNATIONAL CAR ADMINISTRATION OFFICE | T. Masaki<br>T. MASAKI - MANAGER<br>TECHNICAL SERVICE PLANNING |

**1. Description:**

On the 6G7 engine equipped vehicle, correction has been made to the transmission removal steps.

**2. Applicable Manuals:**

| Manual | Pub. No. | Page |
|---|---|---|
| 2001 PAJERO<br>Workshop Manual VOL.1 | PWJE0001 (1/2) (English) | 23-122 |
| 2001 MONTERO<br>Workshop Manual VOL.1 | PWJS0002 (1/2) (Spanish) | 23-122 |
| 2001 PAJERO/MONTERO<br>CD-ROM | PWJT0008R-A (English)<br>(Spanish)<br>(French)<br>(Dutch) | - |



Purchased from www.WorkshopManuals.co.uk

www.WorkshopManuals.co.uk

**3. Details:**



# TRANSMISSION ASSEMBLY

## REMOVAL AND INSTALLATION

NOTE
The rear propeller shaft incorporates a carbon fibre-reinforced plastic tube, so be sure to refer to GROUP 25 during removal.

**<6G7>**

**Pre-removal and Post-installation Operations**
- Skid Plate And Under Cover Removal and Installation
- Transmission Fluid and Transfer Oil Draining and Filling (Refer to P.23-95 and P.23-99.)
- Front and Rear Propeller Shaft Removal and Installation (Refer to GROUP 25.)
- Front Exhaust Pipe Removal and Installation (Refer to GROUP 15.)
- Radiator Shroud Lower Cover Removal and Installation (Refer to GROUP 14.)

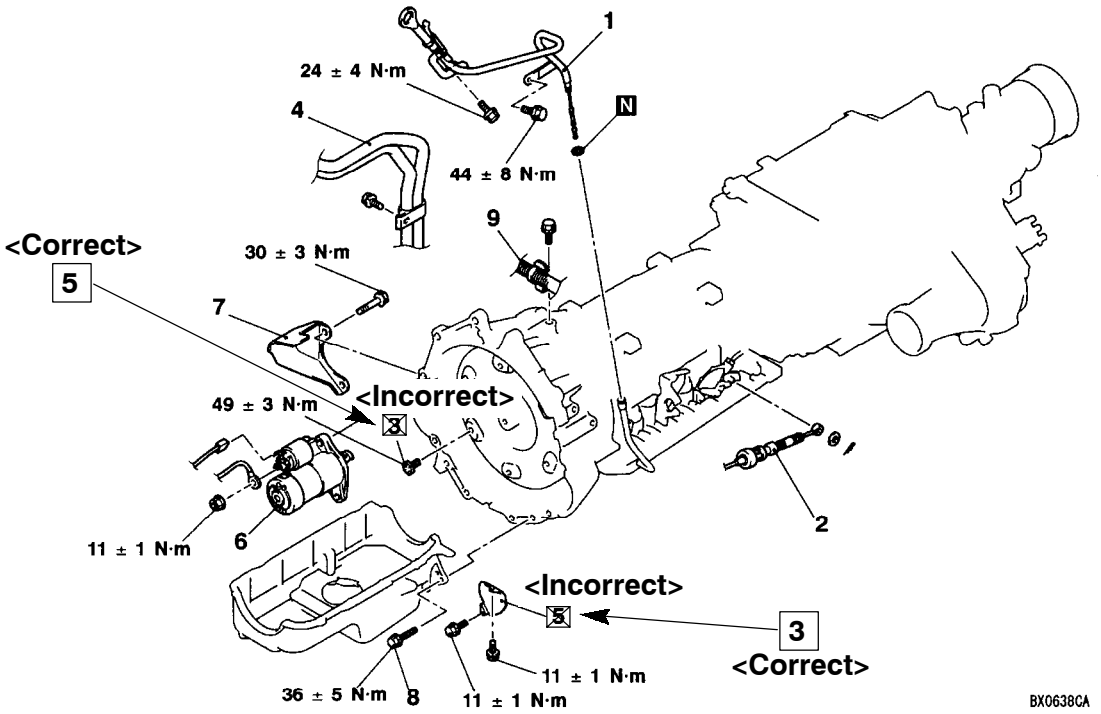


**Removal steps**

1. Oil level gauge assembly
2. Transmission control cable connection
3. ~~Drive plate connection bolts~~ <Incorrect>
4. Heater hose connection
5. ~~Cover~~ <Incorrect>
6. Starter motor
7. Starter cover
8. Oil pan connection bolts
9. Battery cable connection

<Deleted> ◀A▶
◀A▶ <Added>

Cover <Correct>

Drive plate connection bolts <Correct>



Purchased from www.WorkshopManuals.co.uk

www.WorkshopManuals.co.uk

# GROUP 23

# AUTOMATIC TRANSMISSION

## GENERAL

### OUTLINE OF CHANGE

When the inhibitor switch is at the “P” position, it does not send a signal to the transfer-ECU any longer. Due to this change, data list item No.32 has be deleted from the section “Troubleshooting - SS4 II” and transfer-ECU terminal No.33 has been discontinued.

## SEALANT

| Item | Specified sealant | Remark |
|---|---|---|
| Oil pan | MITSUBISHI genuine sealant part No. MD166584 or equivalent | Semi-drying sealant |

## SPECIAL TOOL

| Tool | No. | Name | Application |
|---|---|---|---|
| 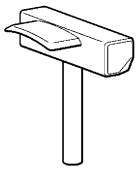 D998727 | MD998727 | Oil pan remover | Oil pan removal |

Purchased from www.WorkshopManuals.co.uk

www.WorkshopManuals.co.uk

# OIL PAN

## REMOVAL AND INSTALLATION

**Pre-removal and Post-installation Operations**
- Transmission Fluid Draining and Filling
- Under Cover Removal and Installation

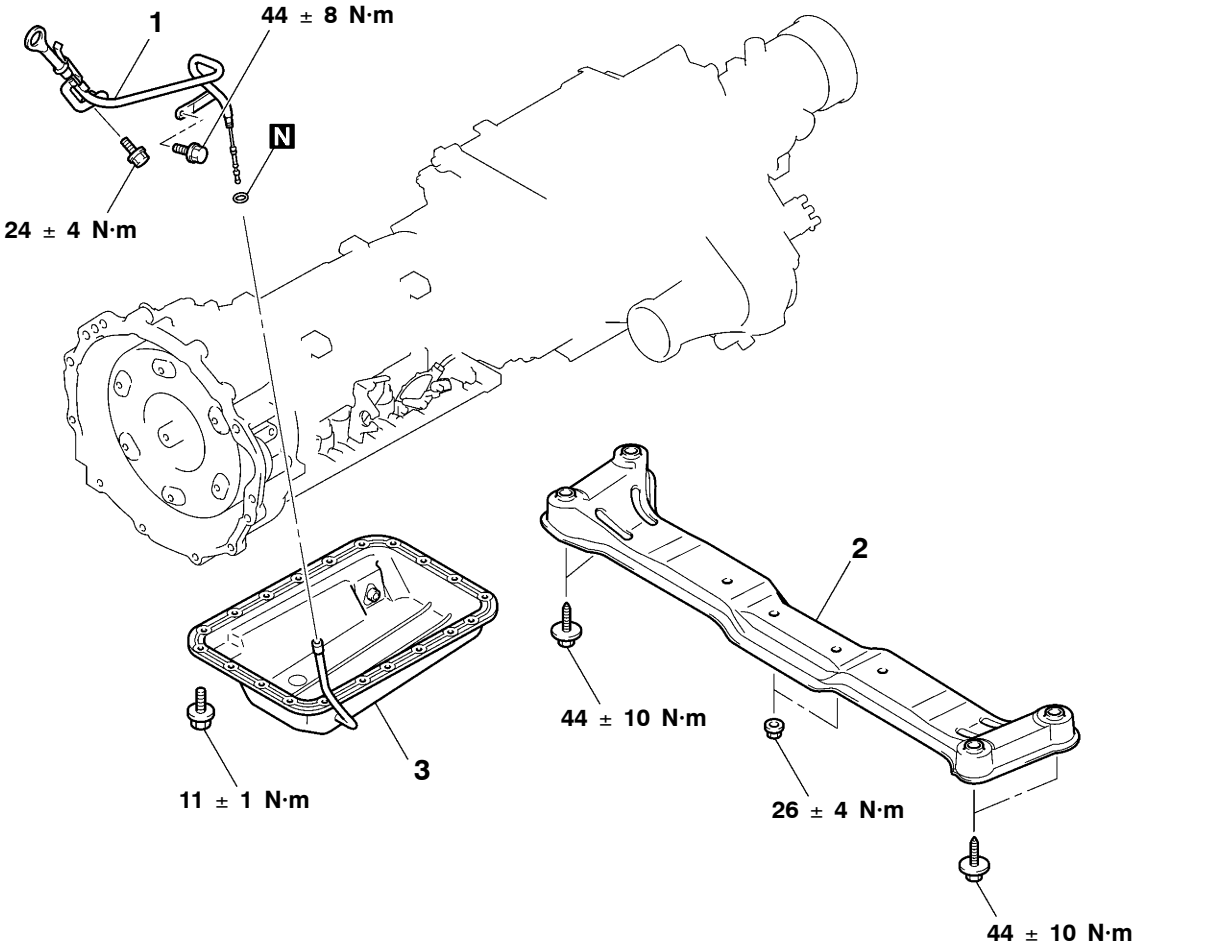


**Removal steps**

1. Oil level gauge assembly
   - Support the transmission with a transmission jack
2. Transmission mount center member assembly
3. Oil pan

◀A▶ ▶A◀

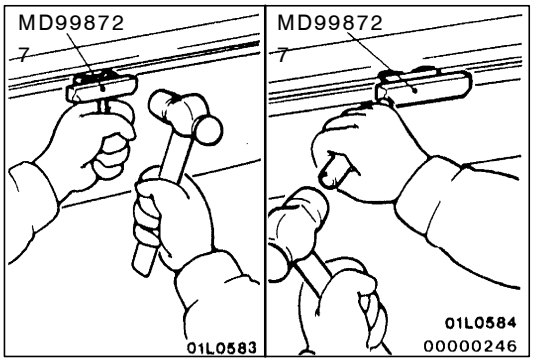


## REMOVAL SERVICE POINT

### ◀A▶ OIL PAN REMOVAL

After removing the oil pan mounting bolts, remove the oil pan with special tool MD998727 and a brass bar.

Purchased from www.WorkshopManuals.co.uk

www.WorkshopManuals.co.uk

## INSTALLATION SERVICE POINT

### ▶A◀ OIL PAN INSTALLATION

1. Remove sealant from the oil pan and transmission case mating surfaces.
2. Degrease the sealant-coated surface and the transmission mating surface.
3. Clean the magnet and install it in the hollow of the oil pan base.

   NOTE
   If the oil pan is replaced, reuse the cleaned magnet.

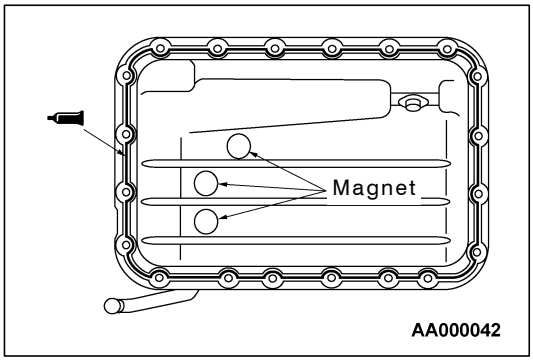


4. Apply MITSUBISHI genuine sealant part No. MD166584 or equivalent around the gasket surface of the oil pan as specified in the illustration.

   NOTE
   The sealant should be applied in a continuous bead approximately 3 mm in diameter.

5. Tighten the mounting bolts to the specified torque.

   **Tightening torque: 11 ± 1 N·m**

Purchased from www.WorkshopManuals.co.uk

www.WorkshopManuals.co.uk

# PROPELLER SHAFT

**Click on the applicable bookmark to selected the required model year.**

Purchased from www.WorkshopManuals.co.uk

www.WorkshopManuals.co.uk


# PROPELLER SHAFT

## CONTENTS

GENERAL INFORMATION ..... 2
SERVICE SPECIFICATIONS ..... 2
LUBRICANT ..... 2
SPECIAL TOOL ..... 2
PROPELLER SHAFT ..... 2

Purchased from www.WorkshopManuals.co.uk

www.WorkshopManuals.co.uk

# GENERAL INFORMATION

A two-joint propeller shaft was used for both the front and rear.
Rear propeller shaft is equipped with a carbon-fiber reinforced plastic (CFRP) tube.

# SERVICE SPECIFICATIONS

| Items | Standard value | Limit |
|---|---|---|
| Propeller shaft runout mm | - | 0.5 |
| Clearance between rear propeller shaft tube end and shaft mm | 0.2 - 0.5 | - |
| Clearance of snap ring groove mm | 0 - 0.06 | - |

# LUBRICANT

| Items | Specified lubricant | Quantity |
|---|---|---|
| Propeller shaft sleeve yoke | Hypoid gear oil SAE 75W-90 or 75W-85W or 80W conforming to API GL-4 | As required |

# SPECIAL TOOL

| Tool | Number | Name | Use |
|---|---|---|---|
| 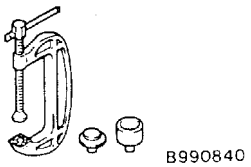  | MB990840 | Universal joint remover and installer | Disassembly and reassembly of the universal joint |

# PROPELLER SHAFT

**Caution**
**Observe the following precautions, as the rear propeller shaft uses a carbon fiber-reinforced plastic (CFRP) tube.**

1. **If a scratch is found on the propeller shaft tube, check that the tube is damaged by using a dye penetrant method.**
2. **If the tube is cracked, chipped or bent, replace the propeller shaft.**
3. **Be careful not to impact or damage the tube.**
4. **If the propeller shaft has been dropped accidentally, replace it.**

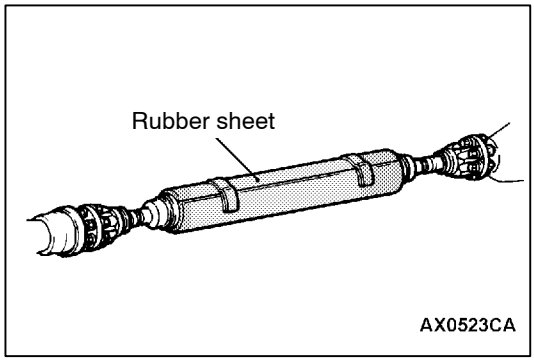


5. **In order to prevent damage, wrap a rubber sheet thicker than 10 mm or a special rubber sheet (parts No.: MR534563 - for short wheel base/parts No.: MR534564 - for long wheelbase) around the propeller shaft tube during the operation.**

Purchased from www.WorkshopManuals.co.uk

www.WorkshopManuals.co.uk

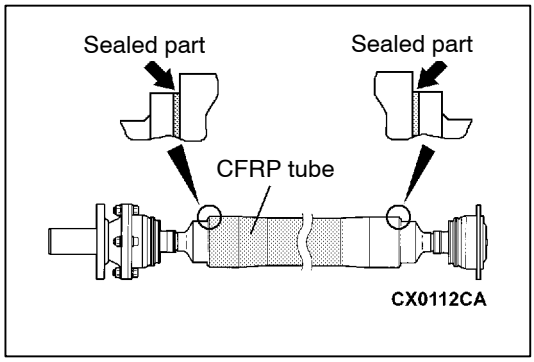


6. **Replace the propeller shaft if cracks or peelings are found at the sealed part.**
7. **It is recommended that a defective propeller shaft should be buried in the earth. Toxic material never leaks from the buried propeller shaft tube.**

## REMOVAL AND INSTALLATION

**Pre-removal Operation**
Wrap the rubber sheet around the rear propeller shaft (prior to the removal)

**Post-installation Operation**
- Remove the the rubber sheet, which is wrapped around the rear CFRP propeller shaft, and then visually check for any cracks.
  (After installation of the rear CFRP propeller shaft)
- Transfer Gear Oil Supplying
  (After the front propeller shaft installation)
  (M/T: Refer to GROUP 22 - On-vehicle Service.)
  (A/T: Refer to GROUP 23 - On-vehicle Service.)

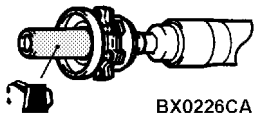


**Gear Oil: Hypoid gear oil SAE 75W-90 or 75W-85W or 80W conforming to API GL-4**

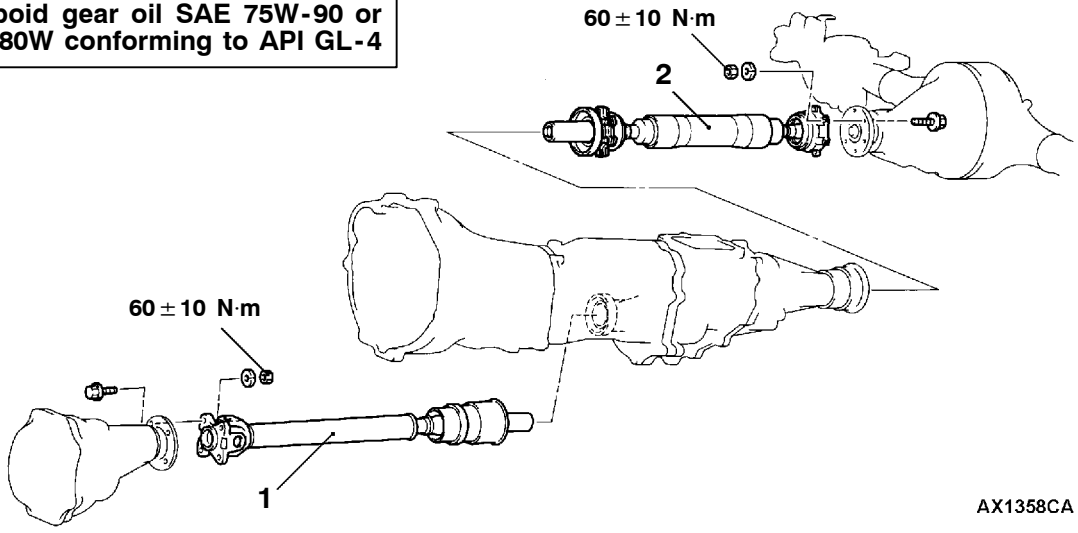


◀A▶ ▶B◀ 1. Front propeller shaft assembly
◀B▶ ▶A◀ 2. Rear propeller shaft assembly

Purchased from www.WorkshopManuals.co.uk

www.WorkshopManuals.co.uk

## REMOVAL SERVICE POINTS

### ◀A▶ FRONT PROPELLER SHAFT ASSEMBLY REMOVAL

1. Set the transfer shift lever to “2H” range.
2. Drain the transfer gear oil.
   (M/T: Refer to GROUP 22 - On-vehicle Service.)
   (A/T: Refer to GROUP 23 - On-vehicle Service.)
3. Make mating marks on the differential companion flange and flange yoke.

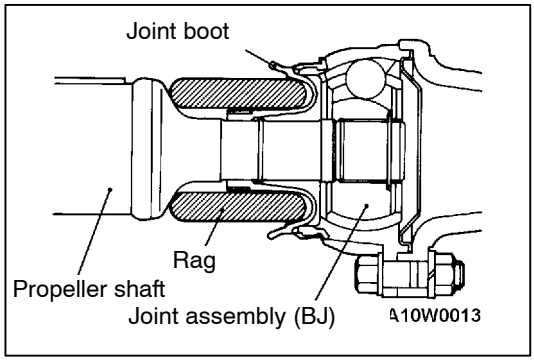


4. Wrap a rag around the joint boot, and then remove the front propeller shaft assembly.

   **Caution**
   **When removing the propeller shaft, be careful not to damage the joint boot by pinching it.**

5. Cover the transfer to prevent the entrance of foreign material.

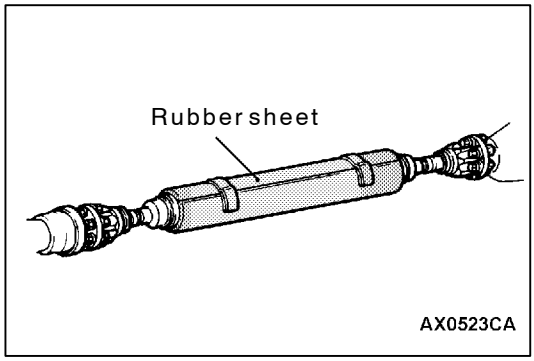


### ◀B▶ REAR PROPELLER SHAFT ASSEMBLY REMOVAL

1. Ensure that the rear propeller shaft assembly is wrapped by the rubber sheet.

   **Caution**
   **In order to prevent damage, make sure that the rubber sheet is wrapped around the carbon fiber-reinforced resin tube of the rear propeller shaft during the operation.**

2. Make mating marks on the differential companion flange and the BJ assembly outer race.
3. Wrap a rag around the joint boot, and then remove the rear propeller shaft assembly.

   **Caution**
   **(1) When removing the propeller shaft, be careful not to damage the joint boot by pinching it.**

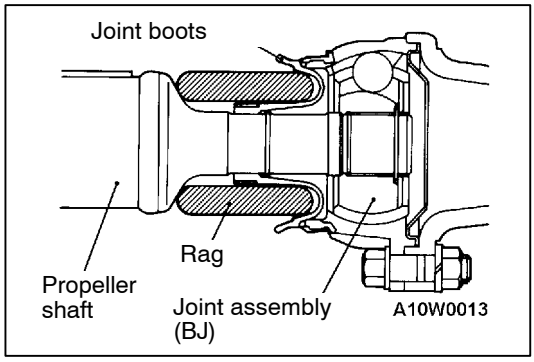


   **(2) The air breather is located at the rear end of the rear propeller shaft. Be careful not to drop the air breather into the BJ.**
   **(3) Be careful not to impact or damage the propeller shaft.**
   **(4) If the propeller shaft has been dropped accidentally, replace it.**

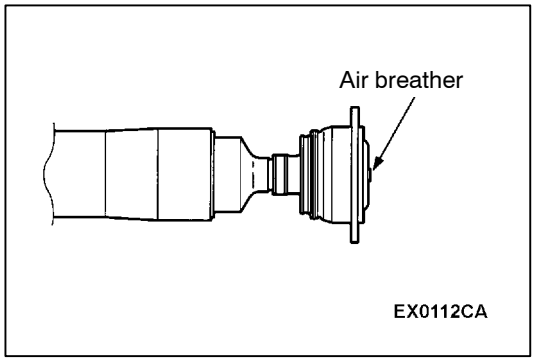


4. Cover the transfer to prevent the entrance of foreign material.

Purchased from www.WorkshopManuals.co.uk

www.WorkshopManuals.co.uk

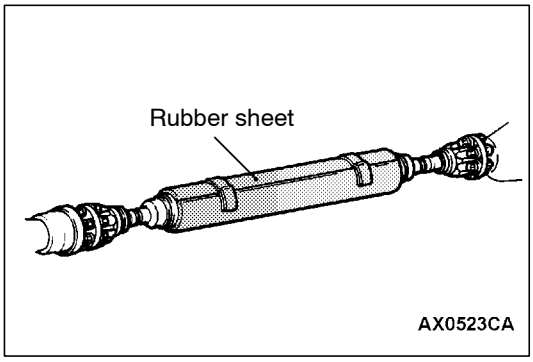


## INSTALLATION SERVICE POINTS

### ▶A◀ REAR PROPELLER SHAFT ASSEMBLY INSTALLATION

Ensure that the rubber sheet is wrapped around the rear propeller shaft assembly.

**Caution**

**In order to prevent damage, make sure that the rubber sheet is wrapped around the carbon fiber-reinforced resin tube of the rear propeller shaft during the operation. Also, do not impact or damage the rear propeller shaft.**

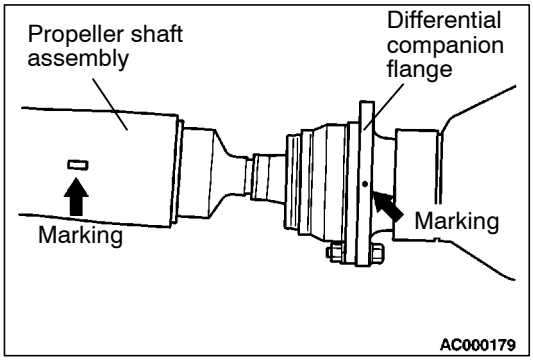


(1) When reusing the propeller shaft, align the mating marks and install the propeller shaft.

(2) When the rear propeller shaft assembly is installed, position it so that the marking on the propeller shaft assemlby is closest to that on the differential companion flange (within 30°).

**Caution**

**(1) Wipe out oil and grease on the threads of the mounting bolts and nuts before tightening, or they will loosen.**

**(2) Be careful not to impact or damage the propeller shaft.**

**(3) If the propeller shaft has been dropped accidentally, replace it.**

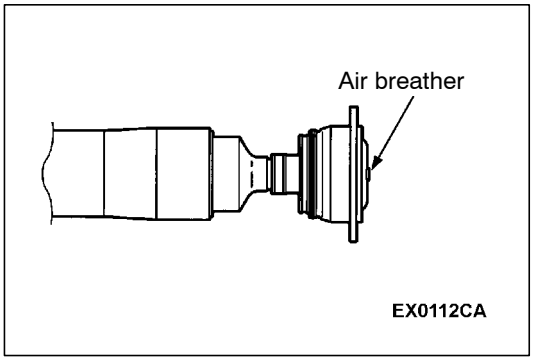


**(4) The air breather is located at the rear end of the rear propeller shaft. Be careful not to drop the air breather into the BJ.**

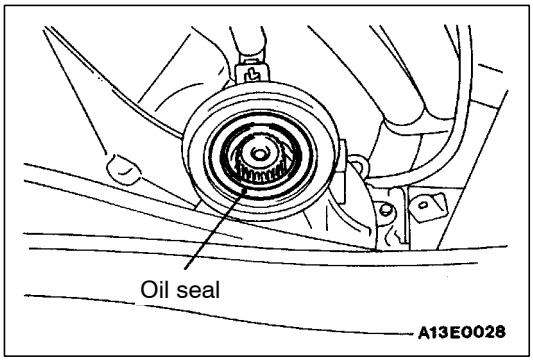


**(5) Do not damage the oil seal lips of the transfer.**

Purchased from www.WorkshopManuals.co.uk

www.WorkshopManuals.co.uk

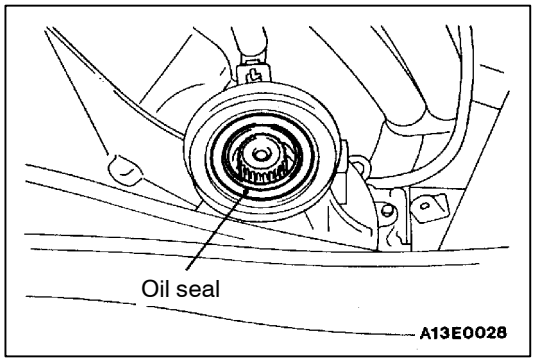


### ▶B◀ FRONT PROPELLER SHAFT ASSEMBLY INSTALLATION

When reusing the propeller shaft, align the mating marks and install the propeller shaft.

**Caution**

1. **Do not damage the oil seal lips of the transfer.**
2. **Wipe out oil and grease on the threads of the mounting bolts and nuts before tightening, or they will loosen.**

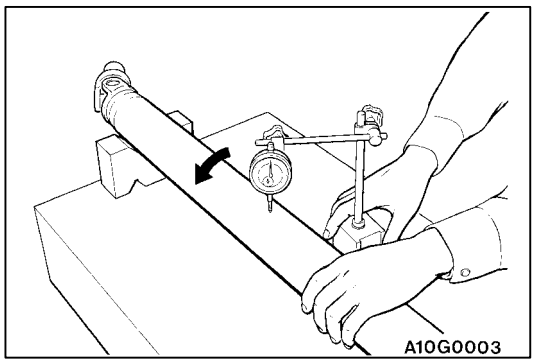


## INSPECTION

### FRONT PROPELLER SHAFT RUNOUT

**Limit: 0.5 mm**

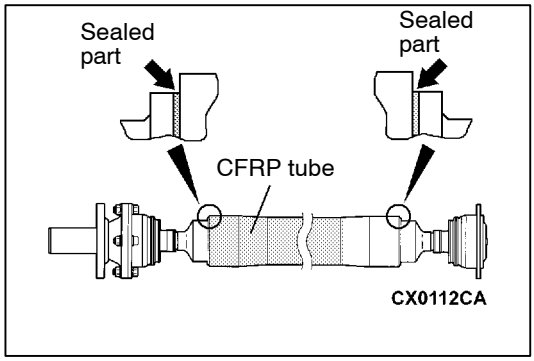


### REAR PROPELLER SHAFT

1. Replace the propeller shaft if cracks or peelings are found at the sealed part.
2. Check the tube for cracks, chips or bends and replace the propeller shaft if damage is found. If defective, check for damage by a dye penetrant method.

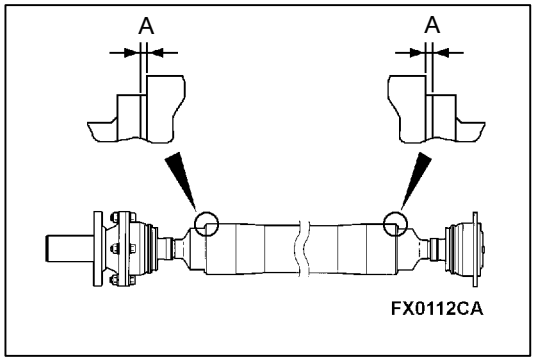


3. Measure clearance (A) between the tube end and the shaft.

   **Standard value (A) : 0.2 - 0.5 mm**

4. If the standard value is not met, replace the rear propeller shaft.

Purchased from www.WorkshopManuals.co.uk

www.WorkshopManuals.co.uk

## DISASSEMBLY AND REASSEMBLY

**Caution**
**The rear propeller shaft is non-serviceable.**

**FRONT PROPELLER SHAFT**

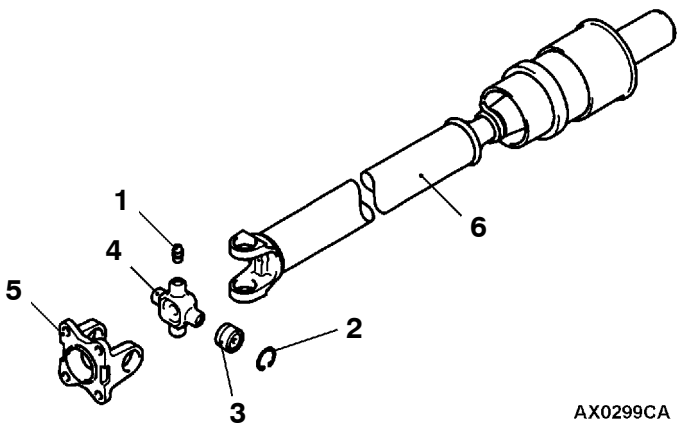


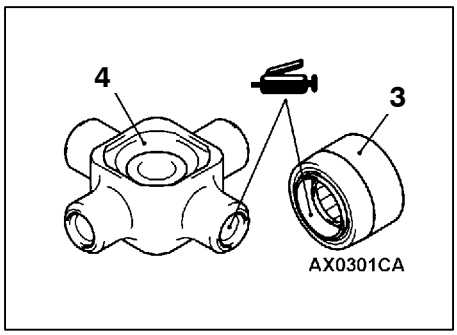


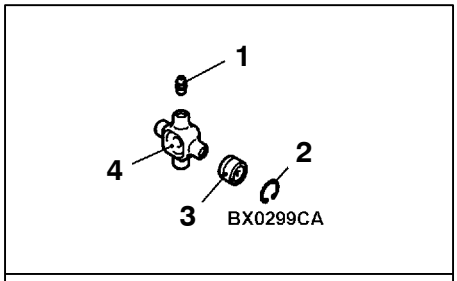


**Universal joint repair kit**

**Disassembly steps**

1. Grease fitting
◀A▶ ▶B◀ 2. Snap ring
◀B▶ ▶A◀ 3. Journal bearing
4. Journal
5. Flange yoke
6. Propeller shaft

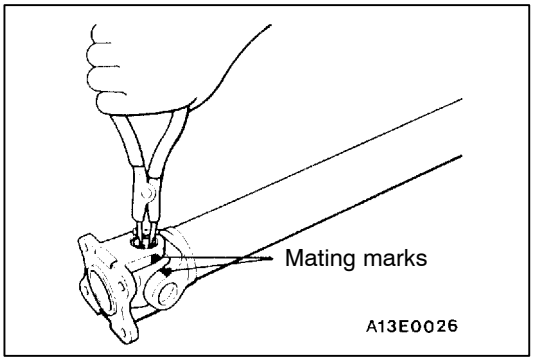


## DISASSEMBLY SERVICE POINTS

### ◀A▶ SNAP RING REMOVAL

Make mating marks on the flange yoke and propeller shaft. Then, remove the snap rings.

Purchased from www.WorkshopManuals.co.uk

www.WorkshopManuals.co.uk

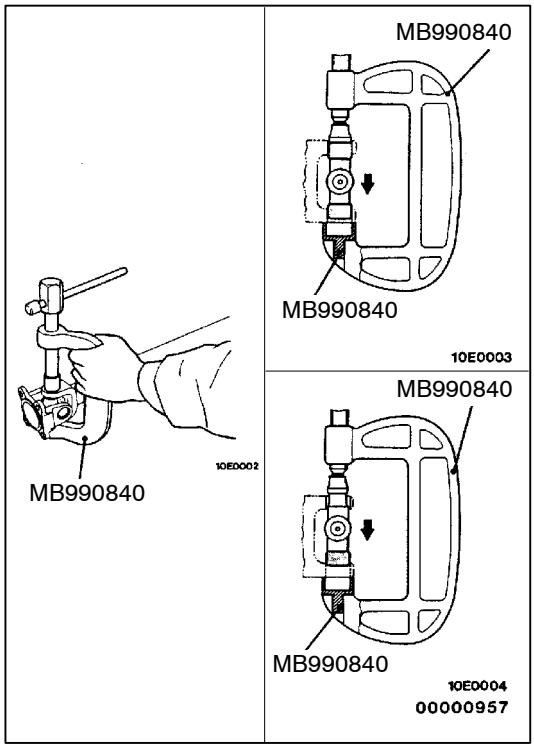


### ◀B▶ JOURNAL BEARING REMOVAL

1. Using the special tools, press in the journal bearing to remove the journal bearing on the opposite side.
2. Set the special tools reverse to press in the journal. Then, pull out the journal bearing pressed in step 1.

   **Caution**
   **Do not tap the journal bearing to remove. Tapping the journal bearing will upset the balance of the propeller shaft.**

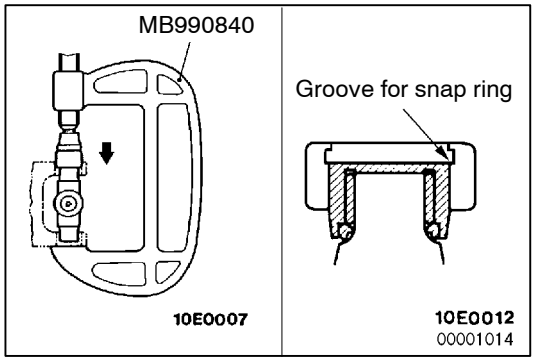


## REASSEMBLY SERVICE POINTS

### ▶A◀ JOURNAL BEARING INSTALLATION

1. Using the special tool, press in the journal bearing to the yoke until the snap ring groove can be seen completely.

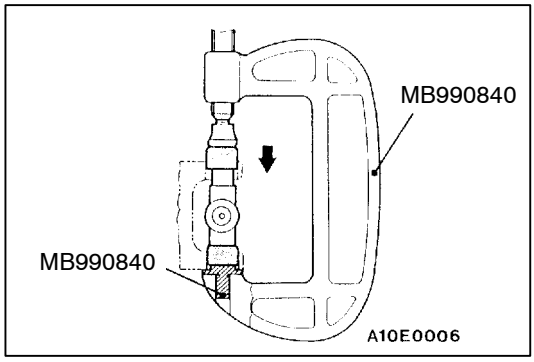


2. Using the special tools, press in the journal bearing on the opposite side to the yoke.

   **Caution**
   **Press in the journal bearing straight, or the journal could damage the inside of the journal bearing.**

3. Align the mating marks on the yoke and propeller shaft. On the propeller shaft side, install the journal bearing in the same steps of 1 and 2.

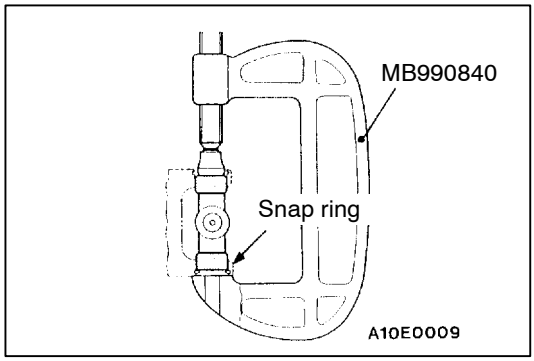


### ▶B◀ SNAP RING INSTALLATION

1. Install the snap ring to one side of the journal.
2. Using the special tool, press in the journal bearing toward the snap ring from the opposite side which the snap ring has been installed on.

Purchased from www.WorkshopManuals.co.uk

www.WorkshopManuals.co.uk

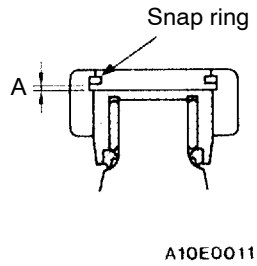


3. Install the snap ring on the opposite side and measure the clearance of the snap ring groove with a thickness gauge.

   **Standard value (A) : 0 - 0.06 mm**

   **Caution**
   **Always use snap rings of the same thickness on both sides.**

4. If the standard value(s) are not met, use other snap rings to adjust the clearance.

| Snap ring thickness mm | Identification colour |
|---|---|
| 1.28 | - |
| 1.31 | Yellow |
| 1.34 | Blue |
| 1.37 | Purple |

Purchased from www.WorkshopManuals.co.uk

www.WorkshopManuals.co.uk

**NOTES**

Purchased from www.WorkshopManuals.co.uk

www.WorkshopManuals.co.uk

# FRONT AXLE

**Click on the applicable bookmark to selected the required model year.**

Purchased from www.WorkshopManuals.co.uk

www.WorkshopManuals.co.uk


# FRONT AXLE

## CONTENTS


GENERAL INFORMATION . . . . . 2

SERVICE SPECIFICATIONS . . . . . 4

LUBRICANTS . . . . . 4

SEALANTS . . . . . 5

SPECIAL TOOLS . . . . . 5

ON-VEHICLE SERVICE . . . . . 10

- Wheel Bearing Backlash Check . . . . . 10
- Front Axle Total Backlash Check . . . . . 10
- Front Axle Gear Oil Level Check . . . . . 11
- Differential Carrier Oil Seal Replacement . . . . . 11
- Solenoid Valve Operation Check . . . . . 12

FRONT HUB AND KNUCKLE ASSEMBLY . 13

DRIVE SHAFT . . . . . 16

INNER SHAFT, HOUSING TUBE . . . . . 24

FREEWHEEL CLUTCH ASSEMBLY, DIFFERENTIAL CARRIER . . . . . 28

FREEWHEEL CLUTCH ASSEMBLY . . . . . 31

DIFFERENTIAL CARRIER . . . . . 34

SOLENOID VALVE, VACUUM PIPE, VACUUM TANK . . . . . 49

FRONT DIFFERENTIAL MOUNT . . . . . 51


Purchased from www.WorkshopManuals.co.uk

www.WorkshopManuals.co.uk

# GENERAL INFORMATION

The front axle consists of the front hubs, knuckles, drive shaft, wheel bearings, ball joints, front differential, and freewheel clutch.
The features are:

- The structural method of press fitting unit bearing into the front hub is applied.
- The wheel bearing uses a taper roller unit bearing. For vehicles with ABS, a rotor for detecting the wheel speed is press-fitted to the U.J. outer wheel.
- Drive shafts incorporate U.J.-B.J.-type constant velocity ball joint has high power transmission efficiency and reduces vibration and noise.

NOTE
U.J. is an abbreviation of Under cut Joint.

- A vacuum-type freewheel clutch has been adopted in the freewheel mechanism. Its solenoid valve and actuator switch powertrain between 2WD and 4WD.
- The differential support method is a four-point elastic support method which reduces vibration and noise.

| Item | | | Specification |
|---|---|---|---|
| Wheel bearings | Wheel bearing type | | Taper roller type unit bearing |
| | Bearing (outside diameter × inside diameter) mm | | 88 × 50 |
| Drive shaft | Joint type | Outside | U.J. |
| | | Inside | D.O.J. |
| | Shaft length*1 × Shaft diameter mm | Right | 353 × 28*2, 361.5 × 26*3 |
| | | Left | 323 × 28*2, 330 × 26*3 |
| Inner shaft | Shaft length × Shaft diameter mm | | 389.2 × 31.5 |
| | Bearing (outside diameter × inside diameter) mm | | 62 × 35 |

NOTE
*1: The shaft length indicates the length between the center points of each joint.
*2: 4M41-M/T
*3: 4D56, 4M41-A/T, 6G74 GDI

## FRONT DIFFERENTIAL

| Item | | Specification |
|---|---|---|
| Reduction gear type | | Hypoid gear |
| Reduction ratio | | 4.900*1, 3.917*2, 4.100*3, 4.300*4 |
| Differential gear type | | Straight bevel gear |
| Number of teeth | Drive gear | 49*1, 47*2, 41*3, 43*4 |
| | Drive pinion | 10*1,*3,*4, 12*2 |
| | Side gear | 14 |
| | Pinion gear | 10 |

NOTE
*1: 4D56
*2: 4M41-A/T
*3: 4M41-M/T
*4: 6G74 GDI

Purchased from www.WorkshopManuals.co.uk

www.WorkshopManuals.co.uk

| | | |
|---|---|---|
| Bearing (outside diameter × inside diameter) mm | Side | 80.0 × 45.2 |
| | Front | 68.3 × 30.2 |
| | Rear | 72.2 × 36.5 |

## STRUCTURAL DIAGRAM

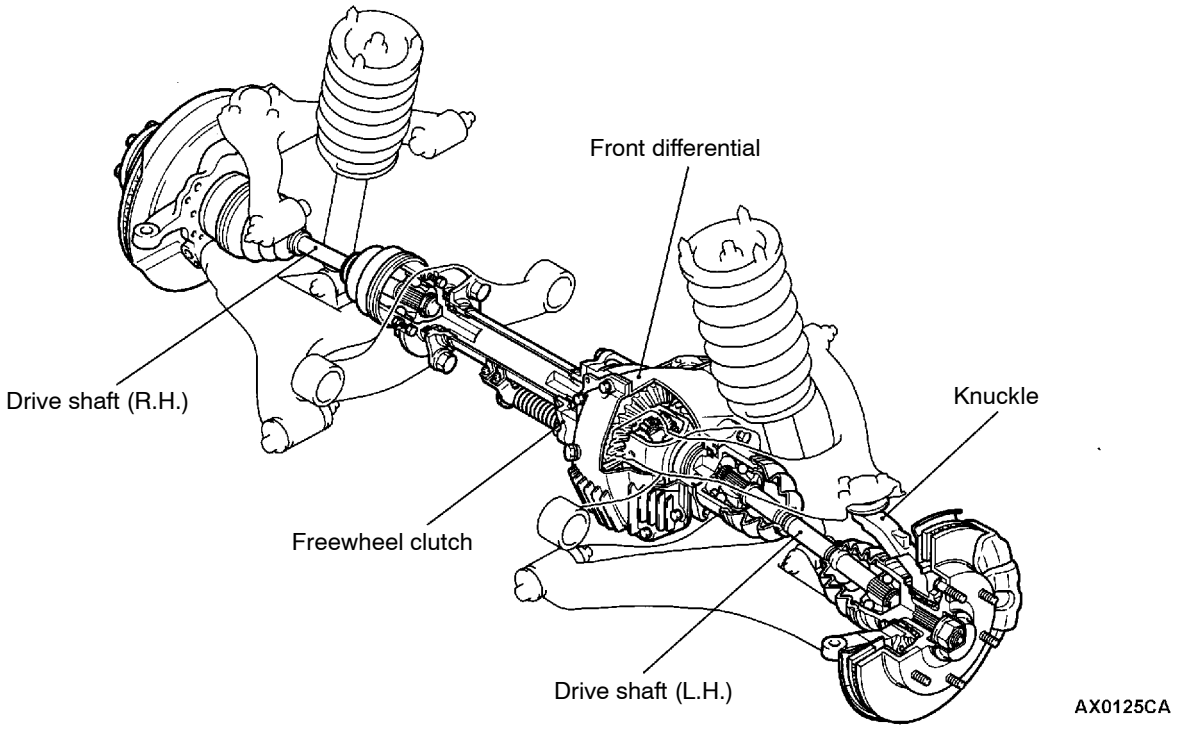


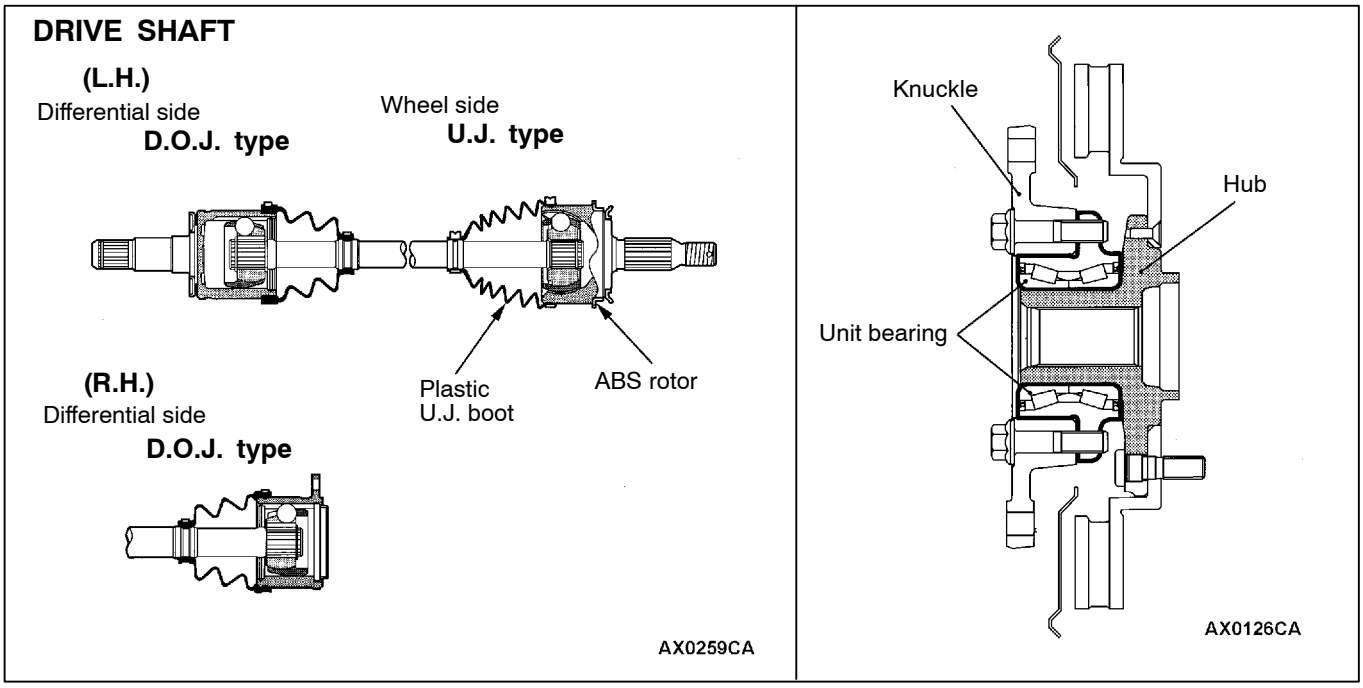


Purchased from www.WorkshopManuals.co.uk

www.WorkshopManuals.co.uk

# SERVICE SPECIFICATIONS

| Item | | Standard value | Limit |
|---|---|---|---|
| Wheel bearing axis backlash mm | | - | 0 |
| Front axle total backlash mm | | - | 11 |
| Solenoid valve resistance Ω | | 36 - 46 | - |
| Hub rotation starting torque N·m | | - | 1.75 |
| Setting of D.O.J. boot length mm | | 80 ± 5 | - |
| Opening dimension of the special tool (MB991561) mm | When the B.J. boot band (small) is crimped. | 2.9 | - |
| | When the B.J. boot band (big) is crimped. | 3.2 | - |
| Crimped width of the B.J. boot band mm | | 2.4 - 2.8 | - |
| Crimped height of B. J. boot band (big) mm | | - | 9.5 |
| Final drive gear backlash mm | | 0.11 - 0.16 | - |
| Drive gear runout mm | | - | 0.05 |
| Differential gear backlash mm | | 0 - 0.076 | 0.2 |
| Drive pinion turning torque N·m | Without oil seal | 0.83 - 1.19 | - |
| | With oil seal | Companion flange (oil seal contact surface) with anti-rust oil 0.93 - 1.128 | - |
| | | Companion flange (oil seal contact surface) with gear oil 0.97 - 1.32 | - |

# LUBRICANTS

| Items | Specified lubricants | Quantity |
|---|---|---|
| Front differential gear oil | Hypoid gear oil API classification GL-5 or higher, SAE viscosity No. 90, 80W | 1.2 L |
| D.O.J. boot grease | Repair kit grease | 4M41-M/T:135 ± 10 g<br>4M41-A/T, 6G7:<br>100 ± 10 g |
| U.J.boot grease | Repair kit grease | 4M41-M/T:180 ± 10 g<br>4M41-A/T, 6G7:<br>135 ± 10 g |

Purchased from www.WorkshopManuals.co.uk

www.WorkshopManuals.co.uk

## SEALANTS

| Items | Specified sealants | Remarks |
|---|---|---|
| Contact surface of differential cover and differential carrier | 3M ATD Part No. 8661 or equivalent | Semi-drying sealant |
| Vent plug | | |
| Freewheel clutch assembly | | |
| Drive gear threaded hole | 3M Stud Locking 4170 or equivalent | Anaerobic sealant |

## SPECIAL TOOLS

| Tool | Number | Name | Use |
|---|---|---|---|
| 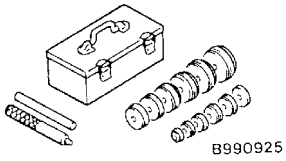 B990925 | MB990925 | Bearing and oil seal installer set | • Press-fitting of housing tube dust seal<br>• Press-fitting of oil seal<br>• Removal and installation of drive pinion front & rear bearing outer race<br>• Checking of drive gear tooth contact |
| 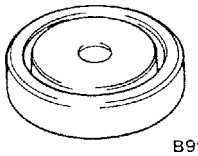 B990955 | MB990955 | Oil seal installer | • Press-fitting of housing tube dust seal (Used together with MB990938) |
| 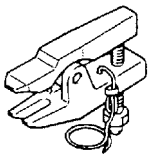 B991113 | MB991113 or MB990635 | Steering linkage puller | • Disconnection of ball joint |
| 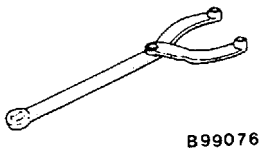 B990767 | MB990767 | Front hub & flange yoke holder | Hub fixiation |
| 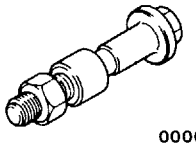 00005697 | MB990998 | Front hub remover & installer | Inspection of hub rotation starting torque |
| 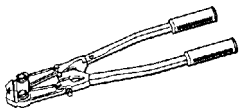 | MB991561 | Boot band clipping tool | Resin boot band installation |
| 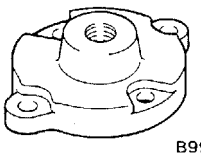 B990906 | MB990906 | Drive shaft attachment | Removal and installation of inner shaft (Used together with MB990211) |

Purchased from www.WorkshopManuals.co.uk

www.WorkshopManuals.co.uk

| Tool | Number | Name | Use |
|---|---|---|---|
| 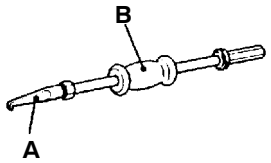 | MB990590<br>A: MB990212<br>B: MB990211 | Rear axle shaft oil seal remover<br>A: Adapter<br>B: Sliding hammer | • Removal of differential carrier oil seal<br>• Removal and installation of inner shaft (Used together with MB990906) |
| 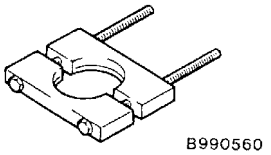 | MB990560 | Bearing remover | • Removal and press-fitting of inner shaft bearing<br>• Removal of freewheel clutch bearing |
| 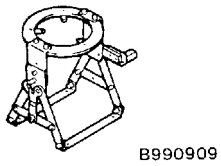 | MB990909 | Working base | Support of front differential carrier assembly |
| 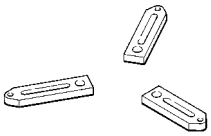 | MB991116 | Adapter | Support of front differential carrier assembly |
| 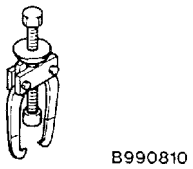 | MB990810 | Side bearing puller | • Removal of side bearing inner race<br>• Removal of companion flange |
| | MB990811 | Differential side bearing cap | |
| 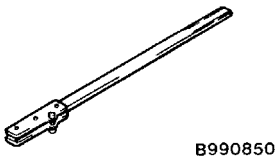 | MB990850 | End yoke holder | Removal and installation of companion flange |
| 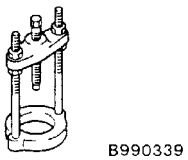 | MB990339 | Bearing puller | Removal of drive pinion front bearing inner race |
| 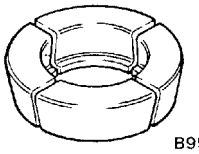 | MB990648 | Bearing remover | |

Purchased from www.WorkshopManuals.co.uk

www.WorkshopManuals.co.uk

| Tool | Number | Name | Use |
|---|---|---|---|
| 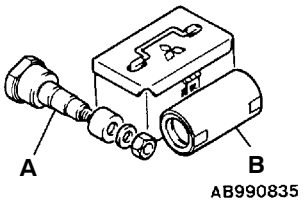 | MB991171<br>A: MB990819<br>B: MB991170 | Pinion height gauge set<br>A: Drive pinion gauge assembly<br>B: Cylinder gauge | • Inspection of drive pinion rotation starting torque<br>• Measurement of drive pinion height |
| 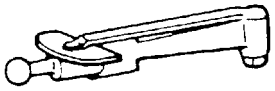 | MB990685 | Torque wrench | • Inspection of hub rotation starting torque<br>• Measurement of drive pinion rotation starting torque |
| 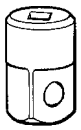 | MB990326 | Preload socket | |
| 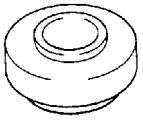 | MB990802 | Bearing installer | • Press-fitting of drive pinion front bearing inner race<br>• Press-fitting of side bearing inner race |
| 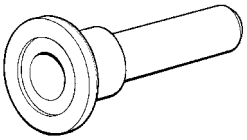 | MB990031<br>or<br>MB990699 | Drive pinion oil seal installer | Press-fitting of drive pinion oil seal |
| 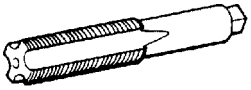 | MB990813 | Tap | Removal of adhesive |
| 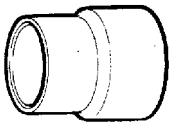 | MB990799 | Ball joint remover and installer | Installation of freewheel clutch bearing |
| 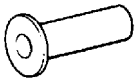 | MB991168 | Differential oil seal installer | Installation of freewheel clutch oil seal |

Purchased from www.WorkshopManuals.co.uk

www.WorkshopManuals.co.uk

| Tool | Number | Name | Use |
|---|---|---|---|
| 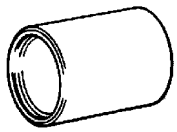 | MB990890 or MB990891 | Rear suspension bushing base | Installation of freewheel clutch bearing |
| 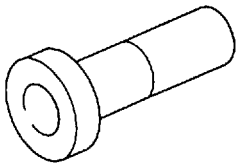 | MD999547 | Oil seal installer | Removal of front differential mount insulator <Front, rear L.H.> |
| 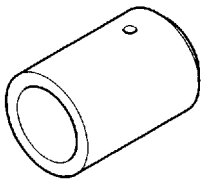 | MD999570 | Crankshaft front oil seal installer | Removal of front differential mount insulator <Rear R.H.> |
| 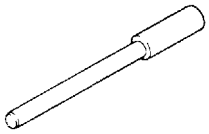 B990947 | MB990947 | Lower arm bush arbor | Press fitting of front differential mount insulator <Front, rear L.H.> |
| 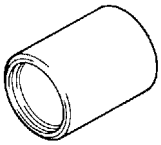 B990847 | MB990847 | Rear suspension bush remover & installer base | |
| 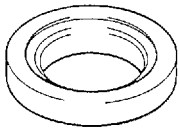 B990884 | MB990981 | Mount bush remover & installer ring | |
| 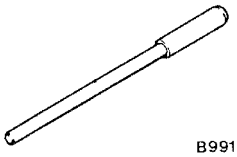 B991318 | MB991318 | Lower arm bush arbor | Press fitting of front differential mount insulator <Rear R.H.> |
| 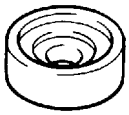 | MB991183 | Bush arbor | |
| | MB990843 | Draglink bush remover & installer | |

Purchased from www.WorkshopManuals.co.uk

www.WorkshopManuals.co.uk

MB990925

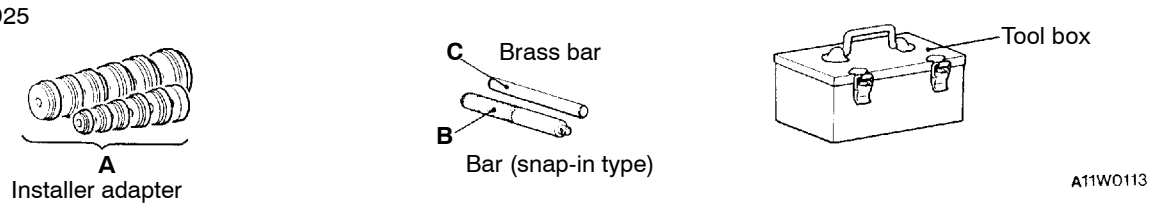


| | Contents of tool (MB990925) | O.D. mm | | Contents of tool (MB990925) | O.D. mm |
|---|---|---|---|---|---|
| A | MB990926 | 39 | A | MB990933 | 63.5 |
| | MB990927 | 45 | | MB990934 | 67.5 |
| | MB990928 | 49.5 | | MB990935 | 71.5 |
| | MB990929 | 51 | | MB990936 | 75.5 |
| | MB990930 | 54 | | MB990937 | 79 |
| A | MB990931 | 57 | B | MB990938 | - |
| A | MB990932 | 61 | C | MB990939 | - |

Purchased from www.WorkshopManuals.co.uk

www.WorkshopManuals.co.uk

# ON-VEHICLE SERVICE

## WHEEL BEARING BACKLASH CHECK

1. Remove the caliper assembly and hold it with wires to prevent it from falling.
2. Remove the brake disk from hub.

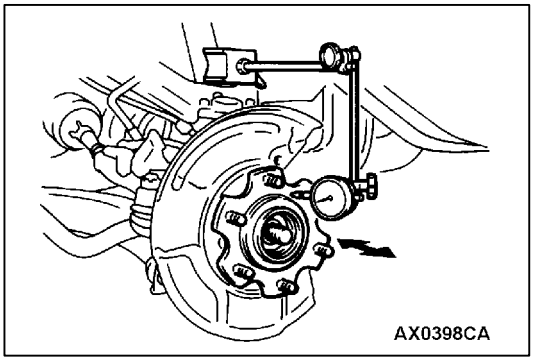


3. Set the dial gauge as shown in the diagram and move the hub in the axis to measure backlash.

   **Limit: 0 mm**
4. If the backlash exceeds the limit value, disassemble hub knuckle to check each component. If front hub assembly bearing is faulty, replace the front hub assembly.

## FRONT AXLE TOTAL BACKLASH CHECK

When the iginition switch is in LOCK(OFF) position, front wheel comes to stop after turning the propeller shaft by hand due to the force applied to front wheel actuator. Inspect the vehicle in the following procedure:

1. Turn the ignition switch to LOCK(OFF) position, and then put the transfer shift lever to the 2H position.

   **Caution**
   **Do not jack up the vehicle.**

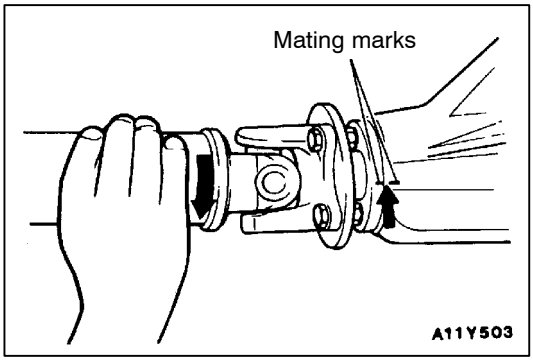


2. Turn the propeller shaft until a click is heard.
3. Turn the companion flange clockwise until all play is removed. Make mating marks on the dust cover of the companion flange with that on the differential carrier.

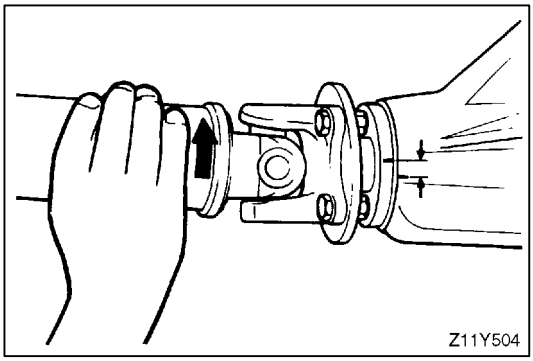


4. Turn the companion flange anti-clockwise until all play is removed and measure the amount of distance through which the mating marks moved.

   **Limit: 11 mm**

Purchased from www.WorkshopManuals.co.uk

www.WorkshopManuals.co.uk

5. If the amount of movement exceeds the limit value, check the following.
   (1) Final drive gear backlash
   (2) Differential gear backlash
   (3) Play in the serrations and splines of the side gears, drive shaft, inner shaft and drive flange

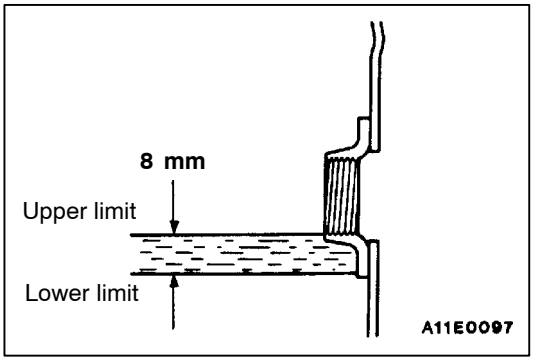


## FRONT AXLE GEAR OIL LEVEL CHECK

Remove the filler plug, and check the gear oil level. Check that gear oil level is not 8 mm below the bottom of filler plug hole.

**Specified gear oil:**
**Hypoid gear oil API classification GL-5 or higher, SAE viscosity No. 90, 80W [Quantity: 1.2** L**]**

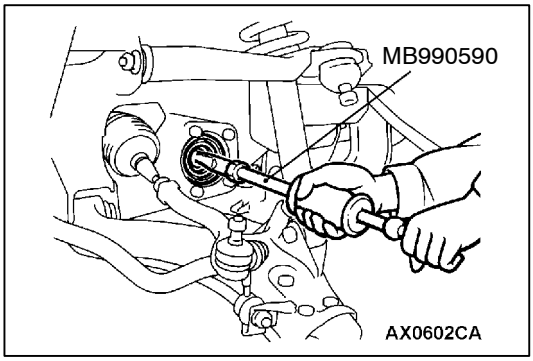


## DIFFERENTIAL CARRIER OIL SEAL REPLACEMENT

1. Remove the drive shaft <L.H.>. (Refer to P.26-16.)
2. Remove the oil seal with special tools.

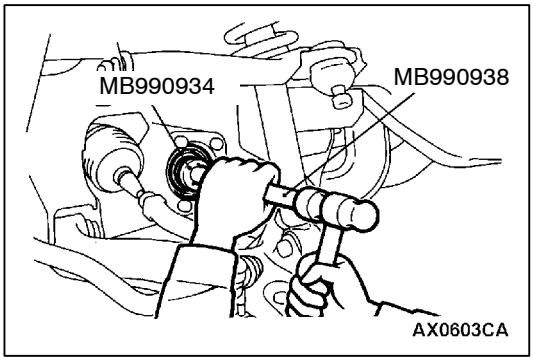


3. Install new oil seal with the special tools.

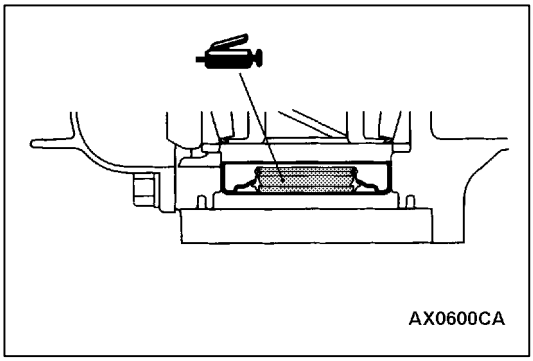


4. Apply multi-purpose grease to lip of oil seal to install drive shaft <L.H.>. (Refer to P.26-16)

   **Caution**
   **1. Be careful not to damage the lip of oil seal**
   **2. Replace the circlip attached to the spline of DOJ side of drive shaft <L.H.> with a new one.**

Purchased from www.WorkshopManuals.co.uk

www.WorkshopManuals.co.uk

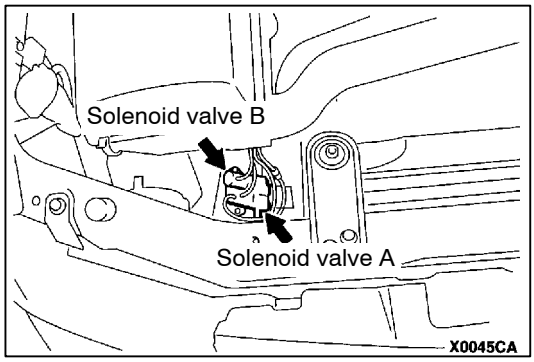


## SOLENOID VALVE OPERATION CHECK

1. Remove the vacuum hoses (blue stripe, yellow stripe) from the solenoid valves.
2. Disconnect the harness connectors.

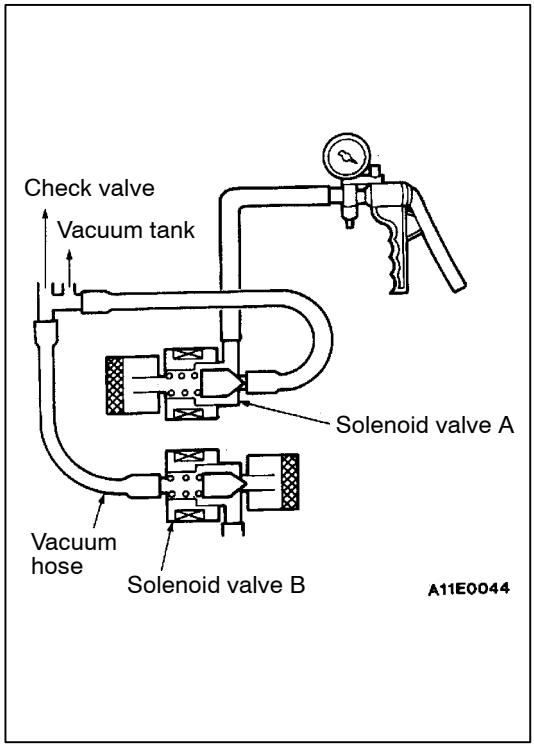


3. Connect a hand vacuum pump to solenoid valve A and carry out the following inspections.
   (1) Even if the hand pump is operated with no other operation, no negative pressure develops.
   (2) Negative pressure does not develop when battery voltage is applied to solenoid valve A. Meanwhile, negative pressure is maintained when the vacuum hose of solenoid valve B is blocked by bending.
   (3) When battery voltage is applied to solenoid valves A and B, negative pressure is maintained.

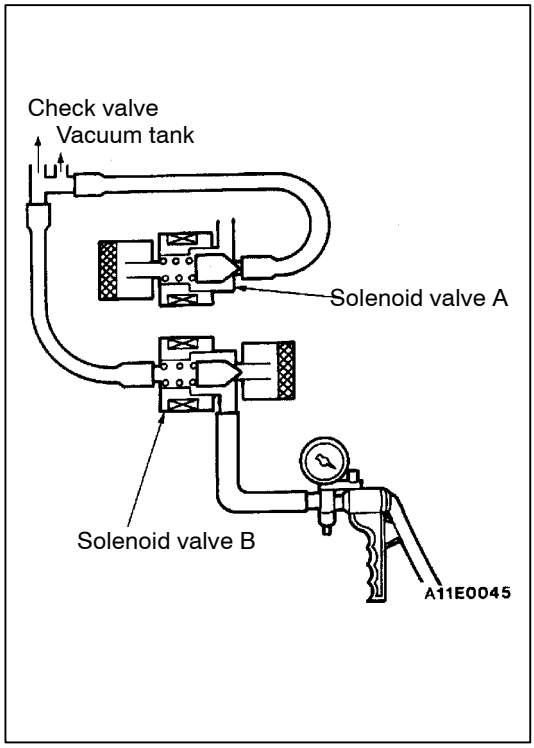


4. Connect the hand vacuum pump to solenoid valve B. Apply negative pressure and carry out the following inspections.
   (1) With no other operation, negative pressure is maintained.
   (2) When battery voltage is applied to solenoid valve B, negative pressure disappears.
   (3) When battery voltage is applied to solenoid valve A, negative pressure disappears.
5. Measure the resistance of the solenoid valves.

   **Standard value: 36 - 46 Ω**

Purchased from www.WorkshopManuals.co.uk

www.WorkshopManuals.co.uk

# HUB AND KNUCKLE ASSEMBLY

## REMOVAL AND INSTALLATION

**Post-installation Operation**
Press dust cover with a finger to check for crack or damage in ball joint dust cover.

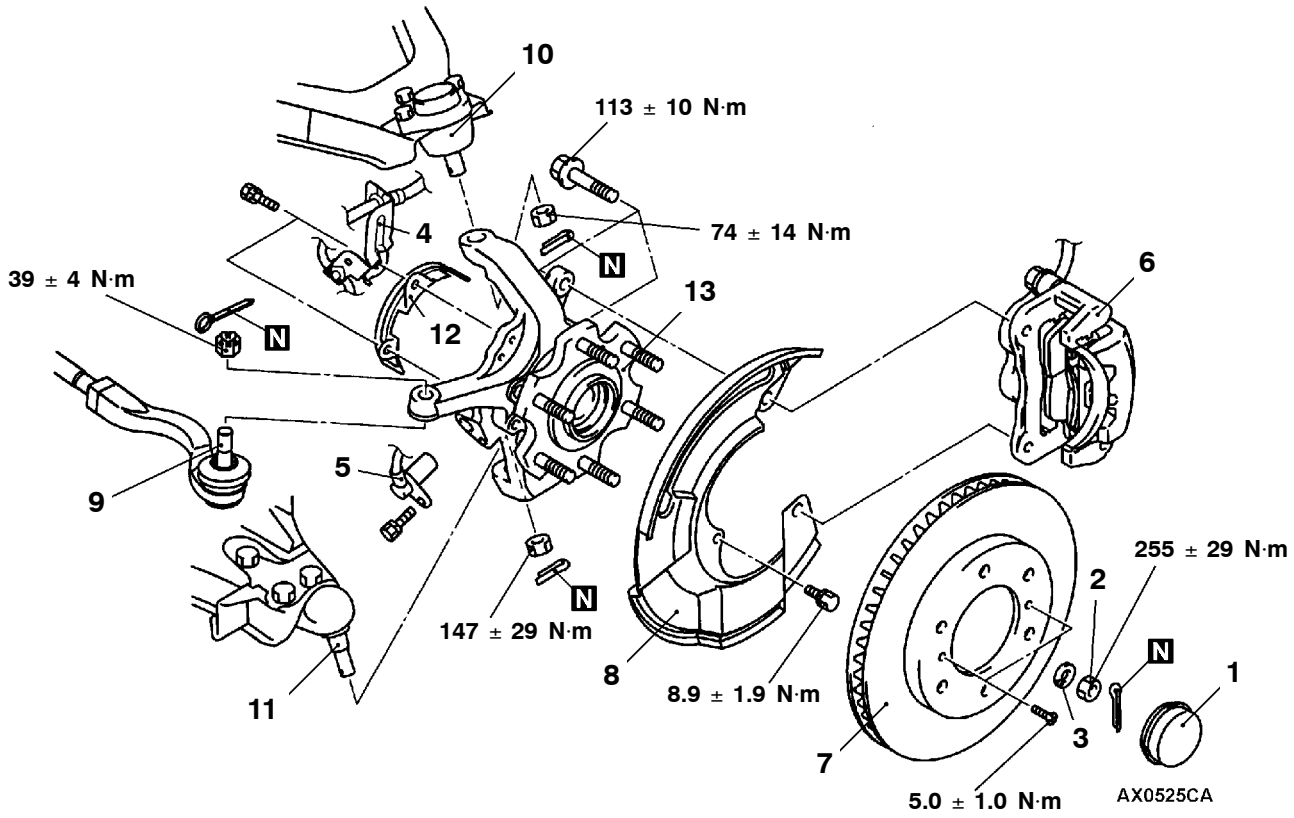


**Removal steps**

1. Hub cap
◀A▶ ▶A◀ 2. Castle nut
▶A◀ 3. Washer
4. Brake hose & vehicle speed sensor clamp bracket
5. Wheel speed sensor <vehicles with ABS>
6. Disc brake assembly
7. Brake disc
8. Dust cover
◀B▶ 9. Tie rod end, hub and knuckle assembly connection
◀B▶ 10. Upper arm, hub and knuckle assembly connection
◀B▶ 11. Lower arm, hub and knuckle assembly connection
12. Rotor protector <vehicles with ABS>
13. Hub and knuckle assembly

Purchased from www.WorkshopManuals.co.uk

www.WorkshopManuals.co.uk

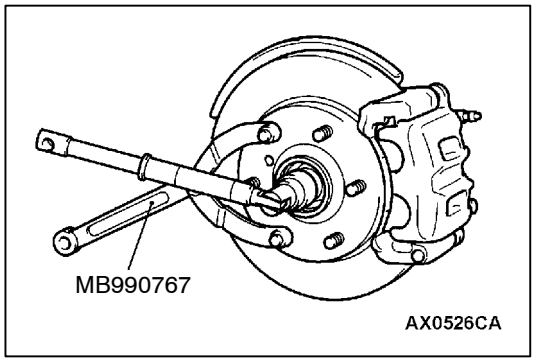


## REMOVAL SERVICE POINTS

### ◀A▶ CASTLE NUT REMOVAL

**Caution**
**Do not apply pressure to wheel bearing by the vehicle weight to avoid possible damage when castle nut is loosened.**

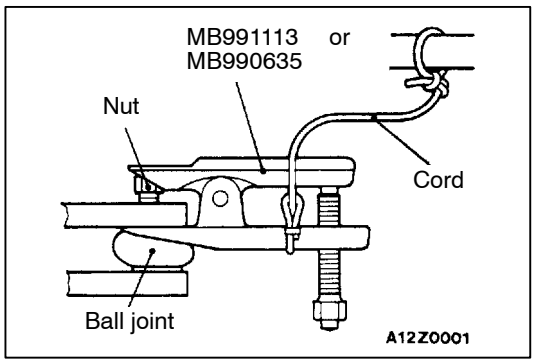


### ◀B▶ TIE ROD END, HUB AND KNUCKLE ASSEMBLY /UPPER ARM, HUB AND KNUCKLE ASSEMBLY /LOWER ARM, HUB AND KNUCKLE ASSEMBLY DISCONNECTION

**Caution**
1. **Do not remove nut from ball joint but loosen it and use special tools instead to avoid possible damage to ball joint threads.**
2. **Hang special tools with ropes to prevent them from falling.**

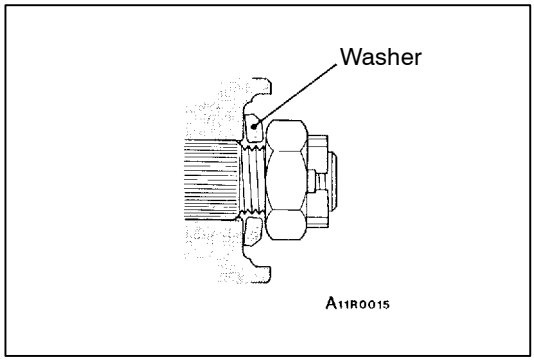


## INSTALLATION SERVICE POINT

### ▶A◀ WASHER/CATSLE NUT INSTALLTION

1. Direct the flat side of a washer to a castle nut to install.

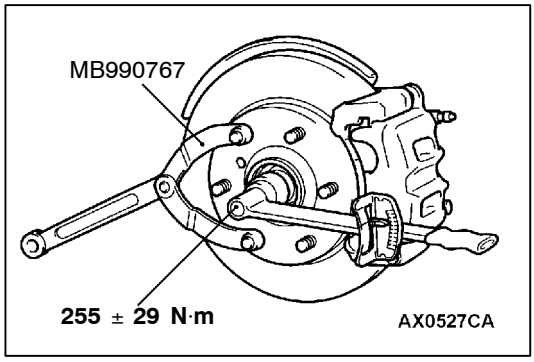


2. Tighten castle nut fully with special tools.

   **Caution**
   **Do not apply pressure to wheel bearing by the vehicle weight to avoid possible damage to wheel bearing before tightening castle nut fully.**
3. If the pin hole does not align with another, tighten the pin to 284 N·m and find the nearest hole then bend the sprit pin to fit in.

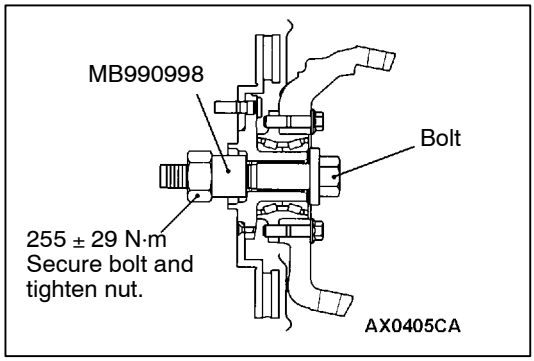


## INSPECTION

### INSPECTION OF HUB ROTATION STARTING TORQUE

1. Tighten special tools in hub and knuckle assembly to the specified torque.

Purchased from www.WorkshopManuals.co.uk

www.WorkshopManuals.co.uk

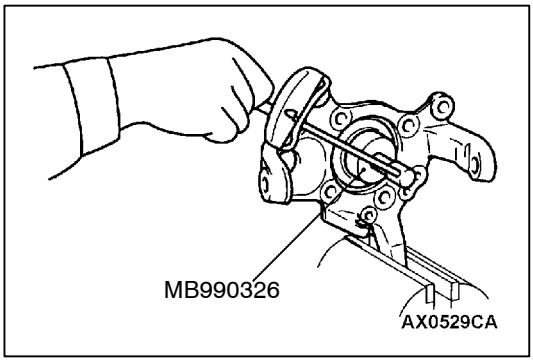


2. Measure the hub rotation starting torque with special tools.

   **Limit: 1.75 N·m or less**

3. Hub rotation starting torque must be under the limit value and there should be no roughness when rotating the hub.

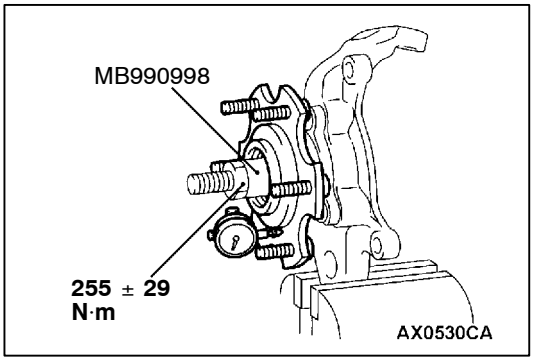


**WHEEL BEARING BACKLASH CHECK**

1. Secure knuckle in a vice to measure backlash in wheel bearing.

   **Limit: 0 mm**

2. If the limit value of backlash in hub axis cannot be obtained when tightened to the specified torque (255 ± 29 N·m), check mounting bolt for hub and knuckle assembly. If no defects are found, replace hub assembly.

## DISASSEMBLY AND REASSEMBLY

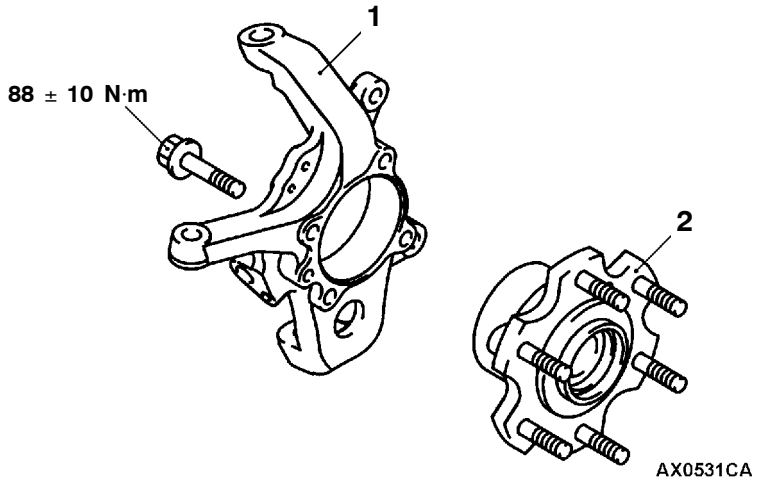


**Disassembly steps**

1. Knuckle
2. Front hub assembly

Purchased from www.WorkshopManuals.co.uk

www.WorkshopManuals.co.uk

# DRIVE SHAFT

## REMOVAL AND INSTALLATION

**Pre-removal and Post-installation Operations**
- Removal and Installation of Under Cover and Skid Plate (Refer to GROUP 42.)
- Connection and Disconnection of Shock Absorber and Stabilizer Link in the Lower Arm Side (Refer to GROUP 33 - Lower Arm.)
- Removal and Installation of Front Brake Assembly (Refer to GROUP 35A.)
- Connection and Disconnection of Knuckle and Tie Rod End (Refer to GROUP 37 - Steering Gear Linkage.)

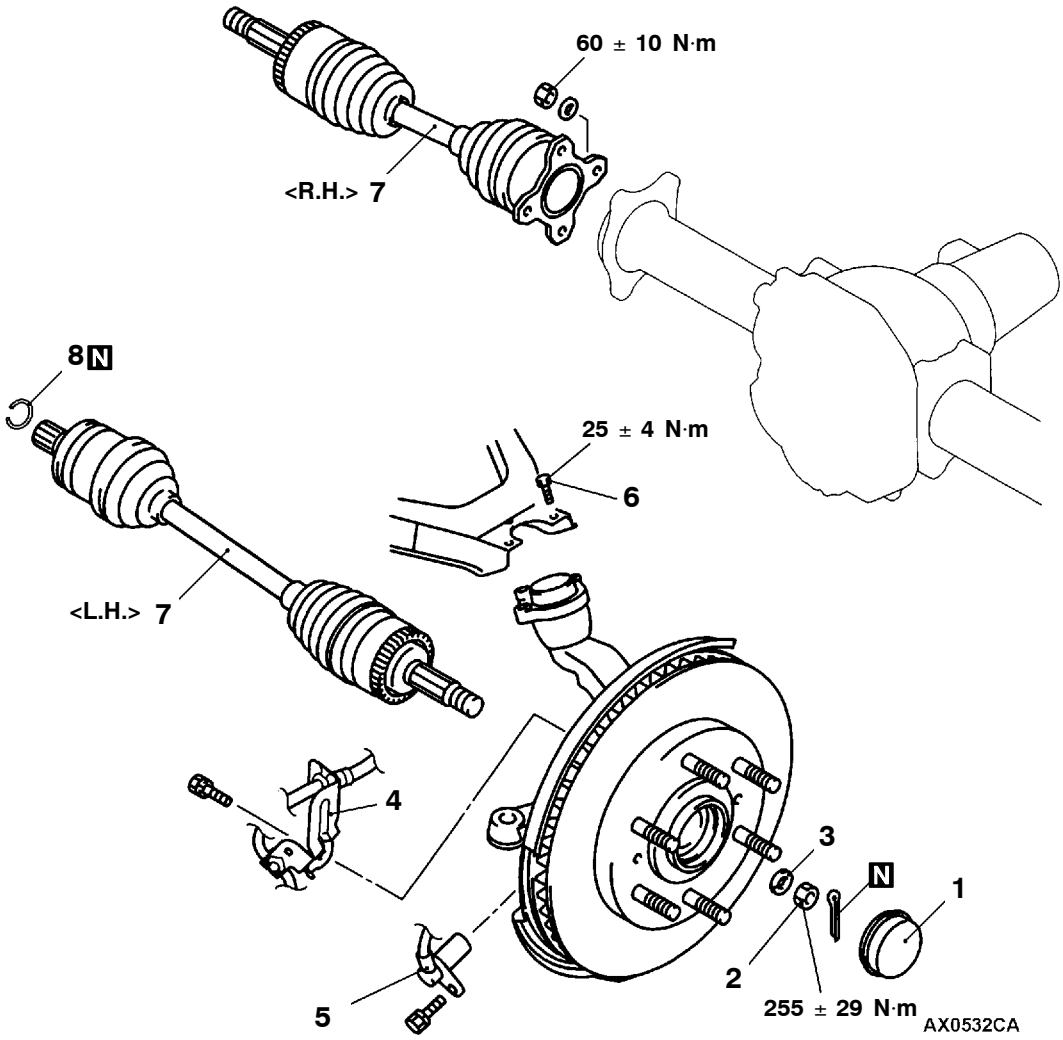


**Removal steps**

◀A▶ ▶B◀ 1. Hub cap
2. Castle nut
▶B◀ 3. Washer
4. Brake hose and vehicle speed sensor clamp bracket
5. Wheel speed sensor <vehicles with ABS>
6. Upper arm and upper arm ball joint connection
◀B▶ ▶A◀ 7. Drive shaft
8. Circlip <L.H.>

Purchased from www.WorkshopManuals.co.uk

www.WorkshopManuals.co.uk

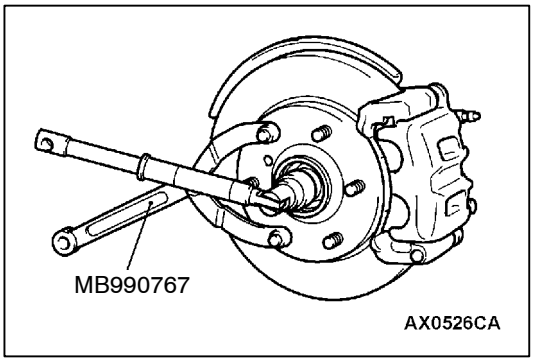


## REMOVAL SERVICE POINTS

### ◀A▶ CASTLE NUT REMOVAL

**Caution**
**Do not apply pressure to wheel bearing by the vehicle weight to avoid possible damage when a castle nut is loosened.**

### ◀B▶ DRIVE SHAFT REMOVAL

**Caution**
**When pulling the drive shaft out from the differential carrier, be careful that the spline part of the drive shaft does not damage the oil seal.**

## INSTALLATION SERVICE POINTS

### ▶A◀ DRIVE SHAFT INSTALLATION

**Caution**
**Do not damage the oil seal of the differential carrier by the drive shaft splines.**

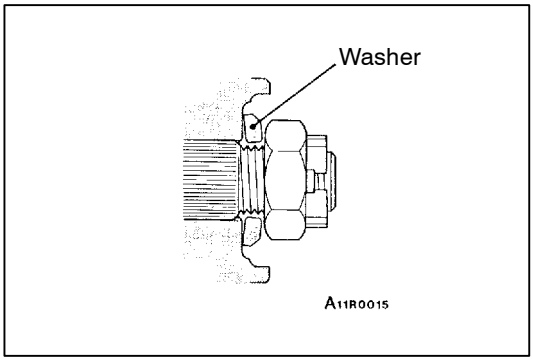


### ▶B◀ WASHER/CASTLE NUT INSTALLATION

1. Fit washer in castle nut with its smaller side facing the castle nut.

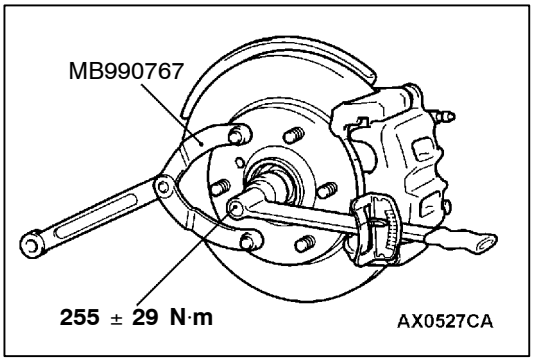


2. Tighten up castle nut with special tools.

   **Caution**
   **Do not apply pressure to wheel bearing by the vehicle weight to avoid possible damage before tightening up castle nut.**
3. In this case, if the pin holes do not match, tighten the nut to 284 N·m and find the most suitable hole to bend the nut with a split pin.

Purchased from www.WorkshopManuals.co.uk

www.WorkshopManuals.co.uk

## INSPECTION

- Check the boot for damage or deterioration.
- Check the ball joint for operating condition and excessive looseness.
- Check the splines for wear or damage.
- Check the differential carrier oil seal (L.H.) for damage.

Purchased from www.WorkshopManuals.co.uk

www.WorkshopManuals.co.uk

## DISASSEMBLY AND REASSEMBLY

**Caution**
**Never disassemble the U.J. assembly except when replacing the U.J. boot.**

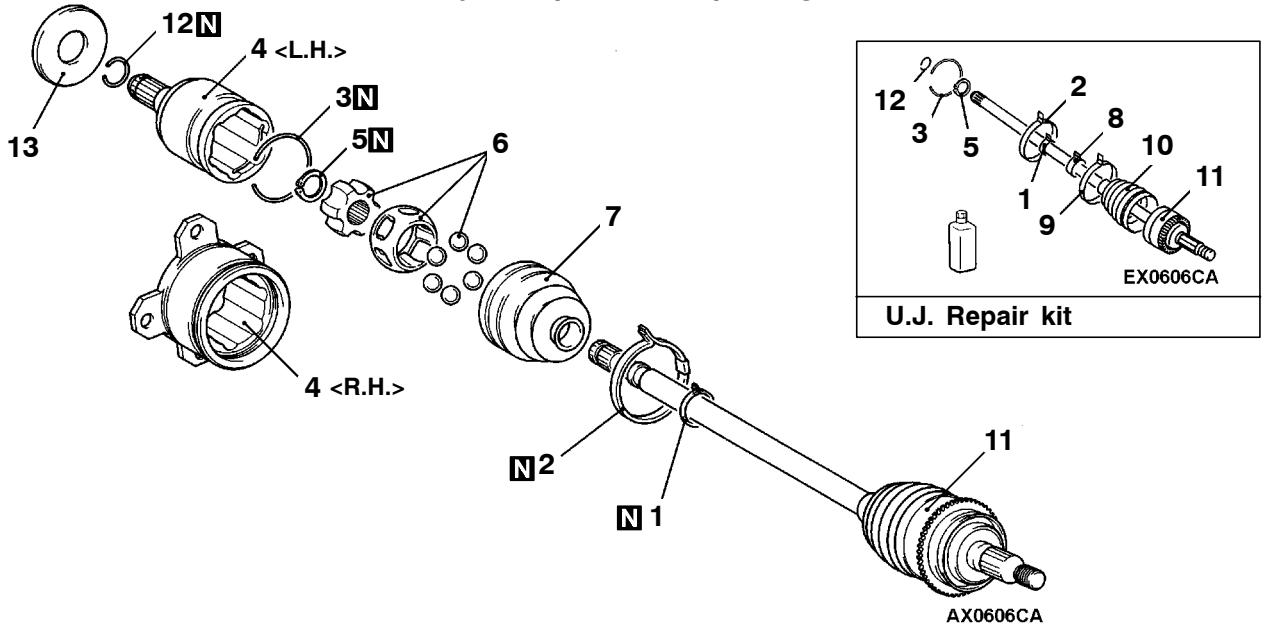


U.J. Repair kit

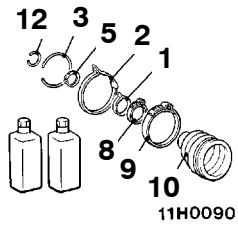


U.J. boot repair kit

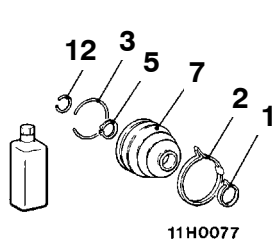


D.O.J. boot repair kit

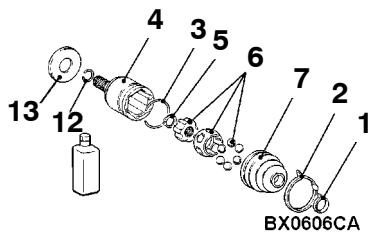


D.O.J. repair kit

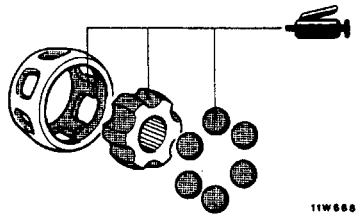


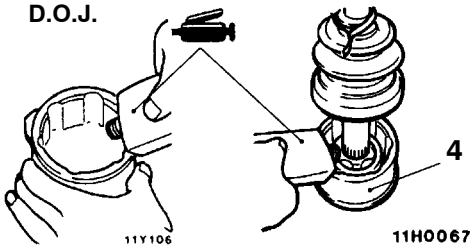


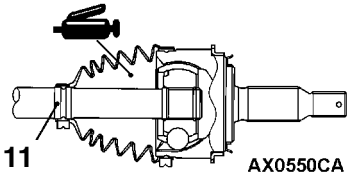


| | |
|---|---|
| Grease: repair kit grease | Grease: Repair kit grease<br>Quantity: <U.J.>4M41-M/T: 180 ± 10 g (90 ± 5 g inside joint, 90 ± 5 g inside boot), 4M41-A/T, 4D5 6G7:135 ± 10 g (65 ± 5 g inside joint, 70 ± 5 g inside boot) <D.O.J.>4M41-M/T: 135 ± 10 g (75 ± 5 g inside joint, 60 ± 5 g inside boot), 4M41-A/T, 4D5 6G7:100 ± 10g (60 ± 5 g inside joint, 40 ± 5 g inside boot) |

**Caution**
**Do not mix old and new or different types of grease, as a special grease is used in the joint.**

**Disassembly steps**

▶B◀ 1. D.O.J. boot band (small)
▶B◀ 2. D.O.J. boot band (large)
3. Circlip
4. D.O.J. outer race
5. Snap ring
6. Inner race, cage and ball assembly
◀A▶ ▶A◀ 7. D.O.J. boot
8. U.J. boot band (small)
9. U.J. boot band (large)
10. U.J. boot
11. U.J. assembly
12. Circlip <L.H.>
13. Circlip <L.H.>

Purchased from www.WorkshopManuals.co.uk

www.WorkshopManuals.co.uk

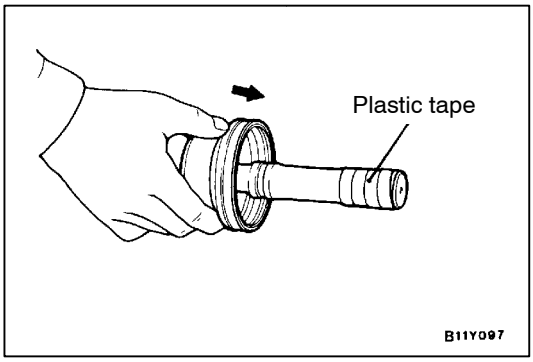


## DISASSEMBLY SERVICE POINT

### ◀A▶ D.O.J. BOOT REMOVAL

Wrap plastic tape around the spline part on the U.J. assembly so that D.O.J. boot is not damaged when they are removed.

## REASSEMBLY SERVICE POINTS

### ▶A◀ D.O.J. BOOT INSTALLATION

Install boot after wrapping plastic tape around the spline part on the U.J. assembly.

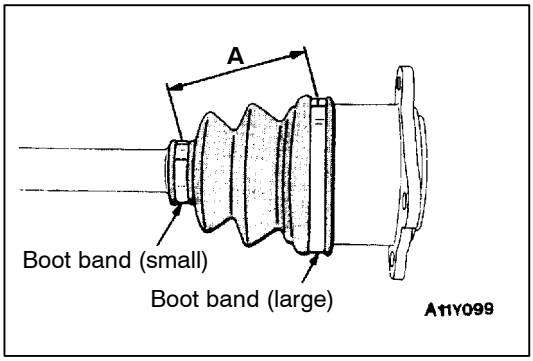


### ▶B◀ D.O.J. BOOT BAND/D.O.J. BOOT BAND INSTALLATION

1. Position the D.O.J. outer race so that the distance between the boot bands is at the standard value.

   **Standard value (A): 80 ± 5 mm**

2. Remove part of the D.O.J. boot from the D.O.J. outer race to release the air pressure inside the boot.

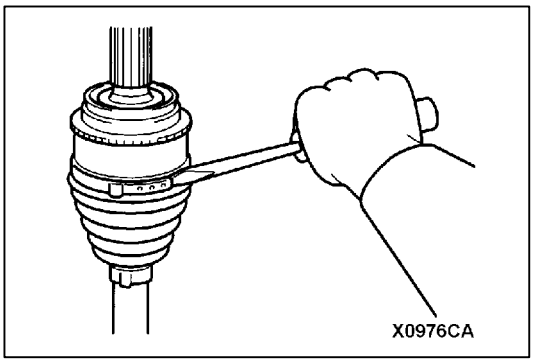


## U.J. BOOT (RESIN BOOT) REPLACEMENT

1. Remove the boot bands (large and small).

   NOTE
   The B.J. boot bands cannot be re-used.

2. Remove the B.J. boot.

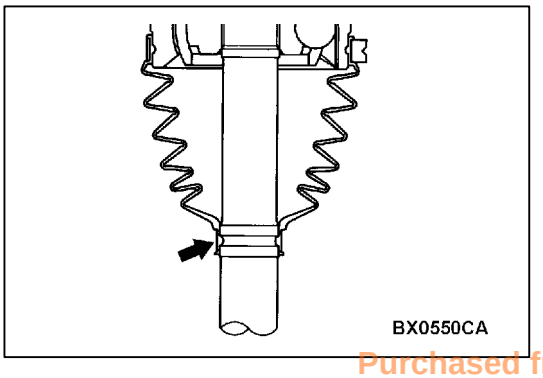


3. Install the small part on the plastic boot aligning the groove of the shaft.

Purchased from www.WorkshopManuals.co.uk

www.WorkshopManuals.co.uk

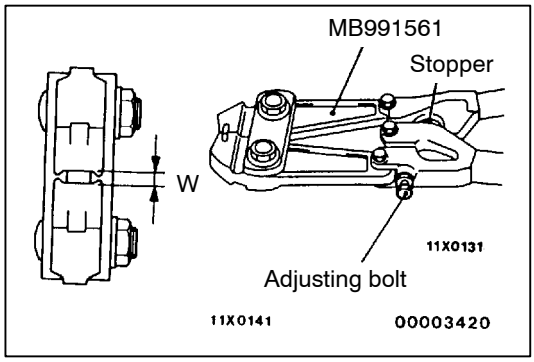


4. Turn the adjusting bolt on the special tool so that the size of the opening (W) is at the standard value.

   **Standard value (W): 2.9 mm**
   **<If it is larger than 2.9 mm>**
   **Tighten the adjusting bolt.**
   **<If it is smaller than 2.9 mm>**
   **Loosen the adjusting bolt.**

   NOTE
   (1) The value of W will change by approximately 0.7 mm for each turn of the adjusting bolt.
   (2) The adjusting bolt should not be turned more than once.

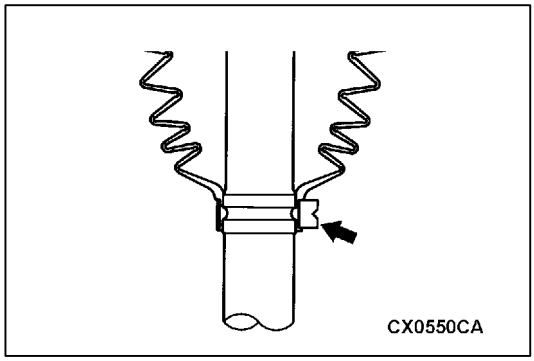


5. Install the U.J. boot band (small) to the U.J. boot.

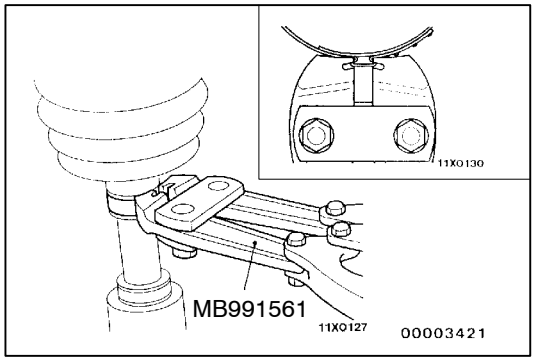


6. Use the special tool to crimp the U.J. boot band (small).

   **Caution**
   **(1) Secure the drive shaft in an upright position and clamp the part of the U.J. boot band to be crimped securely in the jaws of the special tool.**
   **(2) Crimp the U.J. boot band until the special tool touches the stopper.**

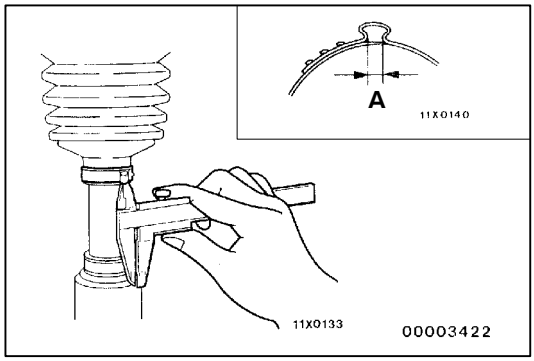


7. Check that crimping amount (A) of the U.J. boot band is at the standard value.

   **Standard value (A): 2.4 - 2.8 mm**
   **<If the crimping amount is larger than 2.8 mm>**
   **Readjust the value of (W) in step (4) according to the following formula, and then repeat the operation in step (6).**
   **W = 5.5 mm - A**
   **Example: If A = 2.9 mm, then W = 2.6 mm.**

Purchased from www.WorkshopManuals.co.uk

www.WorkshopManuals.co.uk

**<If the crimping amount is smaller than 2.4 mm>**
**Remove the U.J. boot band, readjust the value of (W) in step (4) according to the following formula, and then repeat the operations in steps (5) and (6) using a new B.J. boot band.**
**W = 5.5 mm - A**
**Example: If A = 2.3, then W = 3.2 mm.**

8. Check that the U.J. boot band is not sticking out past the place where it has been installed.
   If the U.J. boot band is sticking out, remove it and then repeat the operations in steps (4) to (7) using a new U.J. boot band.
9. Fill the inside of the U.J. boot with the specified amount of the specified grease.

   **Specified grease: Repair kit grease**

   **Amount to use:**
   **Vehicles with 4M41-M/T: 180 ± 10 g**
   **(90 ± 5 g inside joint, 90 ± 5 g inside boot)**
   **Vehicles with 4M41-A/T, 4D5 6G7: 135 ± 10 g**
   **(65 ± 5 g inside joint, 70 ± 5 g inside boot)**

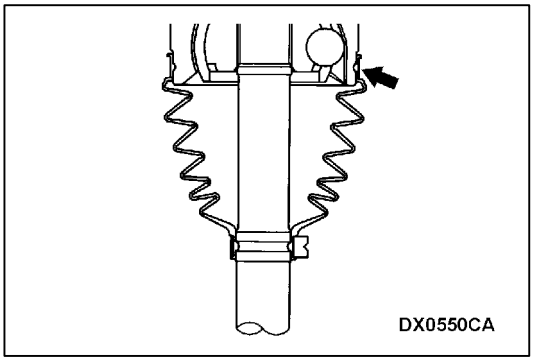


10. Install the large diameter part on the plastic boot alighning the groove of the shaft.
11. Follow the same procedure as in step (4) to adjust the size of the opening (W) on the special tool so that it is at the standard value.

    **Standard value (W): 3.2 mm**

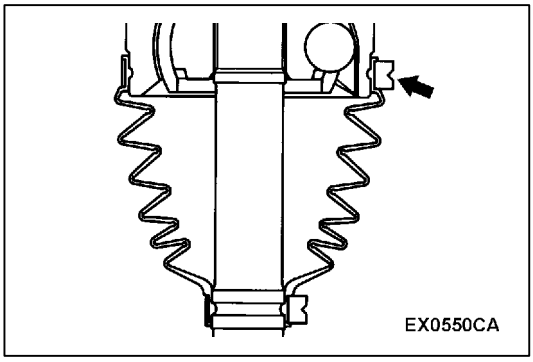


12. Install the U.J. boot band (large) to the U.J. boot.
13. Use the special tool to crimp the U.J. boot band (large) in the same way as in step (6).

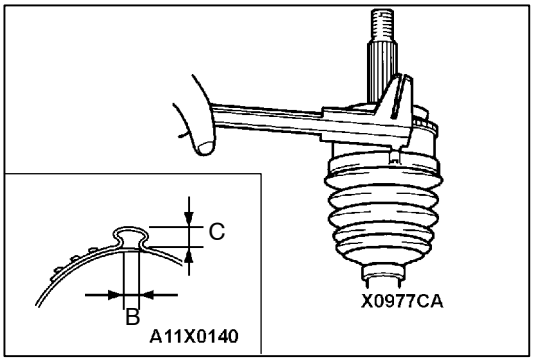


14. Check that the crimping amount (B) of the U.J. boot band is at the standard value and that the crimping amount (C) of the U.J. boot band is at the limited value

    **Standard value (B): 2.4 - 2.8 mm**

    **Limit (C): 9.5 mm**

Purchased from www.WorkshopManuals.co.uk

www.WorkshopManuals.co.uk

**<If the crimping amount is larger than 2.8 mm>**
**Readjust the value of (W) in step (11) according to the following formula, and then repeat the operation in step (13).**
**W = 5.8 mm - B**
**Example: If B = 2.9 mm, then W = 2.9 mm.**

**<If the crimping amount is smaller than 2.4 mm>**
**Remove the U.J. boot band, readjust the value of (W) in step (11) according to the following formula, and then repeat the operations in steps (12) and (13) using a new U.J. boot band.**
**W = 5.8 mm - B**
**Example: If B = 2.3 mm, then W = 3.5mm.**

15. Check that the U.J. boot band is not sticking out past the place where it has been installed.
    If the U.J. boot band is sticking out, remove it and then repeat the operations in steps (12) to (14) using a new U.J. boot band.

Purchased from www.WorkshopManuals.co.uk

www.WorkshopManuals.co.uk

# INNER SHAFT, HOUSING TUBE

## REMOVAL AND INSTALLATION

**Caution**

***: Indicates parts which should be temporarily tightened, and then fully tightened with the vehicle on the ground in the unladen condition.**

**Pre-removal and Post-installation Operation**
- Under Cover and Skid Plate Removal and Installation
- Drive Shaft <R.H.> Removal and Installation (Refer to P.26-16.)

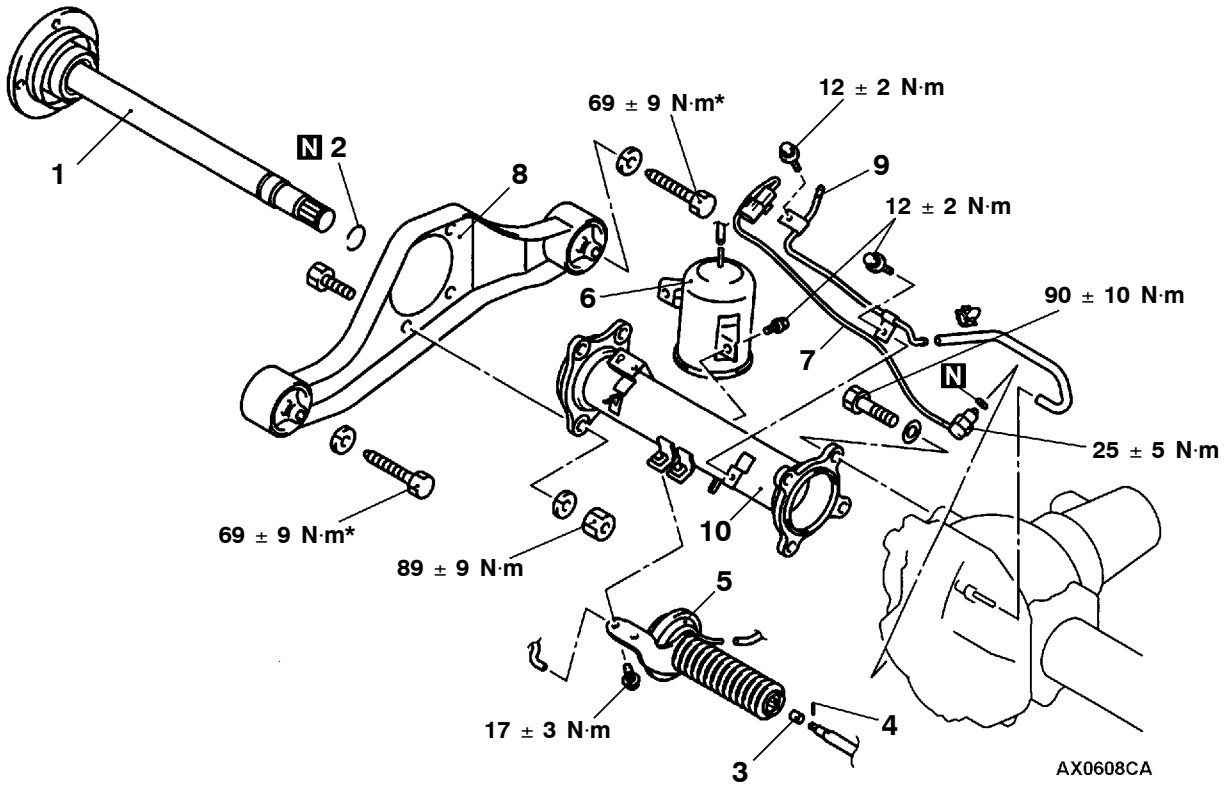


**Removal steps**

◀A▶ ▶B◀
1. Inner shaft
2. Clip
3. Collar
4. Pin
5. Actuator assembly
6. Vacuum tank assembly
7. Engage switch assembly

◀B▶ ▶A◀
- Loosening and tightening of differential mounting insulator bolt
- Support the differential by a transmission jack.

8. Differential mounting bracket <R.H.>
9. Breather pipe
12. Housing tube

Purchased from www.WorkshopManuals.co.uk

www.WorkshopManuals.co.uk

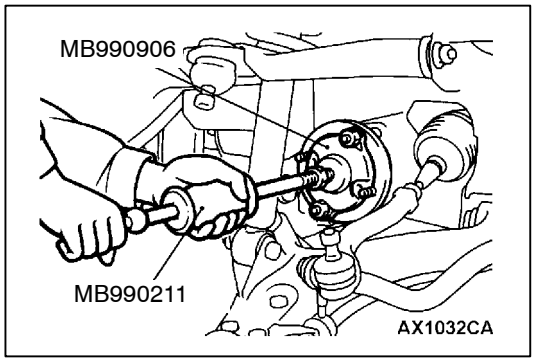


## REMOVAL SERVICE POINTS

### ◀A▶ INNER SHAFT REMOVAL

**Caution**
**When pulling the inner shaft out from the front differential carrier, be careful that the spline part of the inner shaft does not damage the oil seal.**

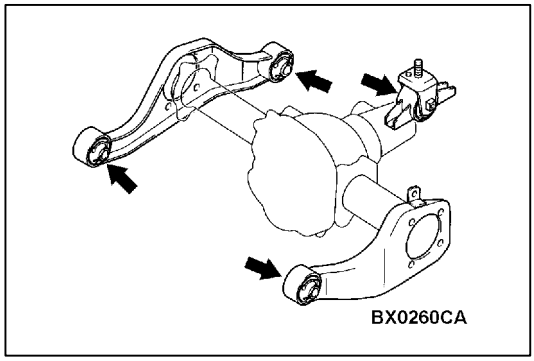


### ◀B▶ DIFFERENTIAL MOUNTING INSULATOR BOLT LOOSENING

Loose the bolt shown in the diagram.

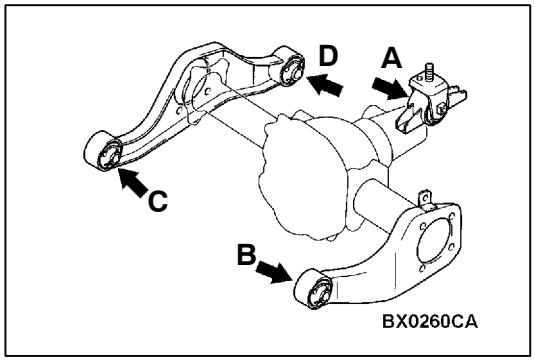


## INSTALLATION SERVICE POINT

### ▶A◀ DIFFERENTIAL MOUNTING INSULATOR BOLT TIGHTENING

Tighten the bolts shown in the diagram in the serivce specification in the order of A, B, C, D or A, C, B, D.

**Tightening torque: 69 ± 9 N·m**

**Caution**
**Place the vehicle on the ground after temporarily tighten bolts to prevent bushes from twisting and fully tighten the bolts in the unladen condition.**

### ▶B◀ INNER SHAFT INSTALLATION

**Caution**
**Be careful not to damage the lip of the dust seal and oil seal.**

Purchased from www.WorkshopManuals.co.uk

www.WorkshopManuals.co.uk

## DISASSEMBLY AND REASSEMBLY

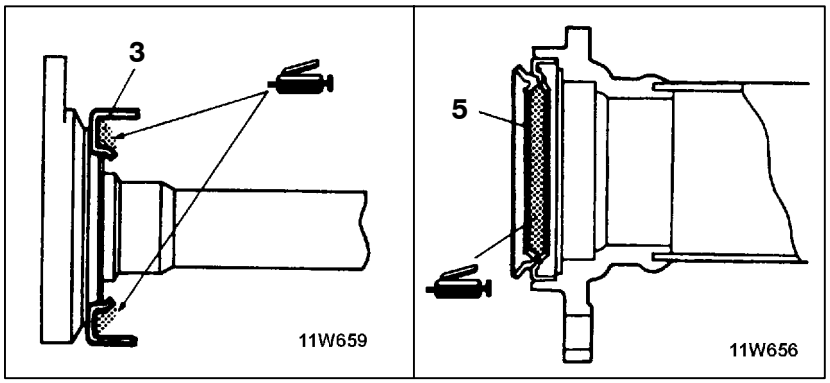


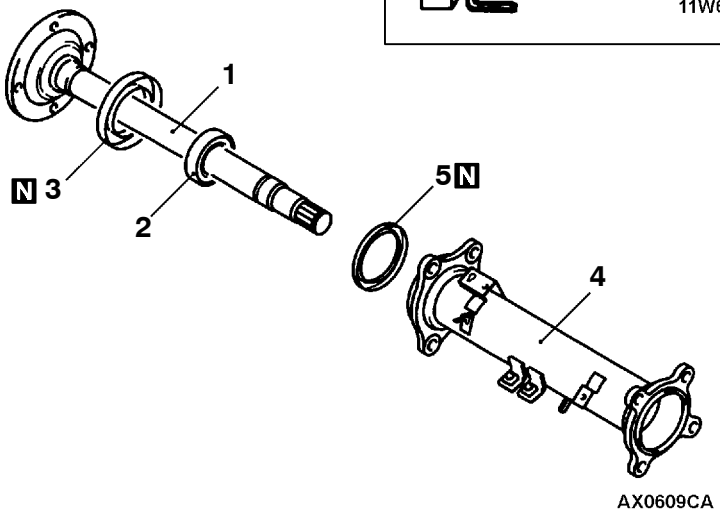


**Disassembly steps**

1. Inner shaft
2. ◀A▶ ▶C◀ Bearing
3. ▶B◀ Dust cover
4. Housing tube
5. ▶A◀ Dust seal

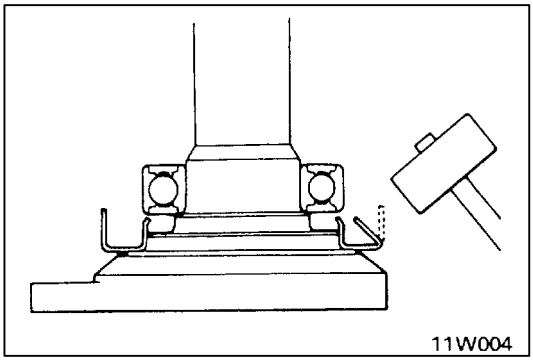


## DISASSEMBLY SERVICE POINT

### ◀A▶ BEARING REMOVAL

1. Bend the outside periphery of dust cover inward with a hammer.

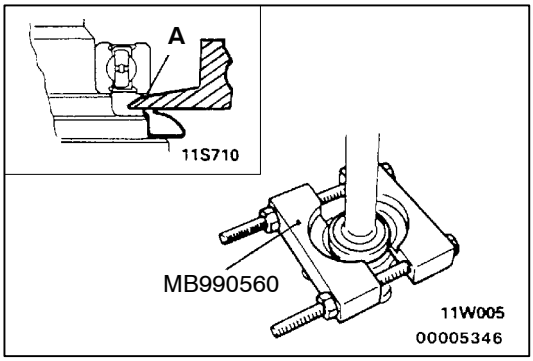


2. After the special tool has been installed as shown, tighten the nut of the special tool until the portion “A” of the special tool touches the bearing outer race.

Purchased from www.WorkshopManuals.co.uk

www.WorkshopManuals.co.uk

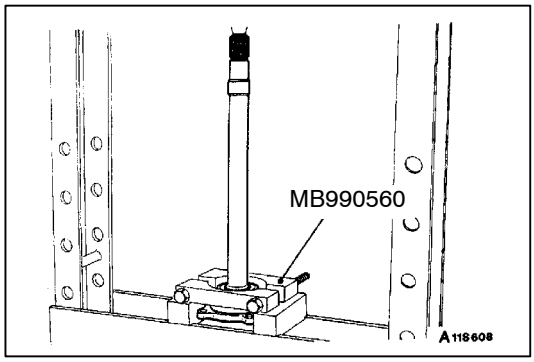


3. Press out the inner shaft from the bearing.

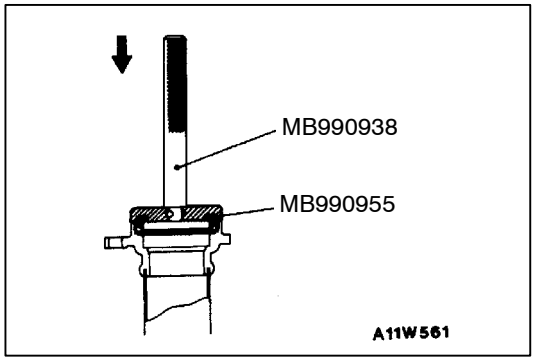


## REASSEMBLY SERVICE POINTS

### ▶A◀ DUST SEAL INSTALLATION

Press-fit the new dust seal into the housing tube by using the special tools, until it is flush with the housing tube end face.

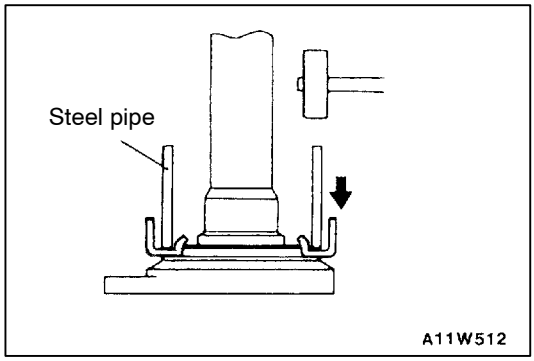


### ▶B◀ DUST COVER INSTALLATION

Using a steel pipe, force a new dust cover onto the inner shaft.

| Steel pipe | mm |
|---|---|
| Overall length | 50 |
| Outside diameter | 75 |
| Wall thickness | 4 |

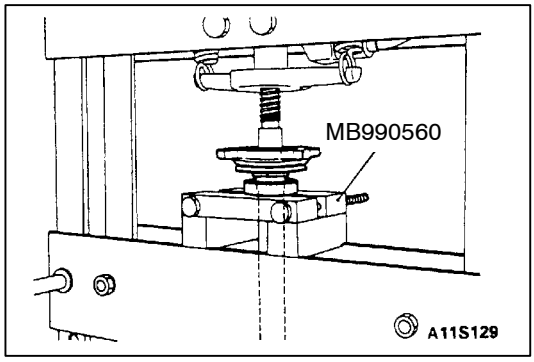


### ▶C◀ BEARING INSTALLATION

Purchased from www.WorkshopManuals.co.uk

www.WorkshopManuals.co.uk

# FREEWHEEL CLUTCH ASSEMBLY, DIFFERENTIAL CARRIER

## REMOVAL AND INSTALLATION

**Caution**

***: Indicates parts which should be temporarily tightened, and then fully tightened with the vehicle on the ground in the unladen condition.**

**Pre-removal and Post-installation**
- Under Cover and Skid Plate Removal and Installation
- Gear Oil Draining and Refill (Refer to P.26-11.)
- Drive Shaft Removal and Installation (Refer to P.26-16.)
- Inner Shaft Removal and Installation (Refer to P.26-24.)

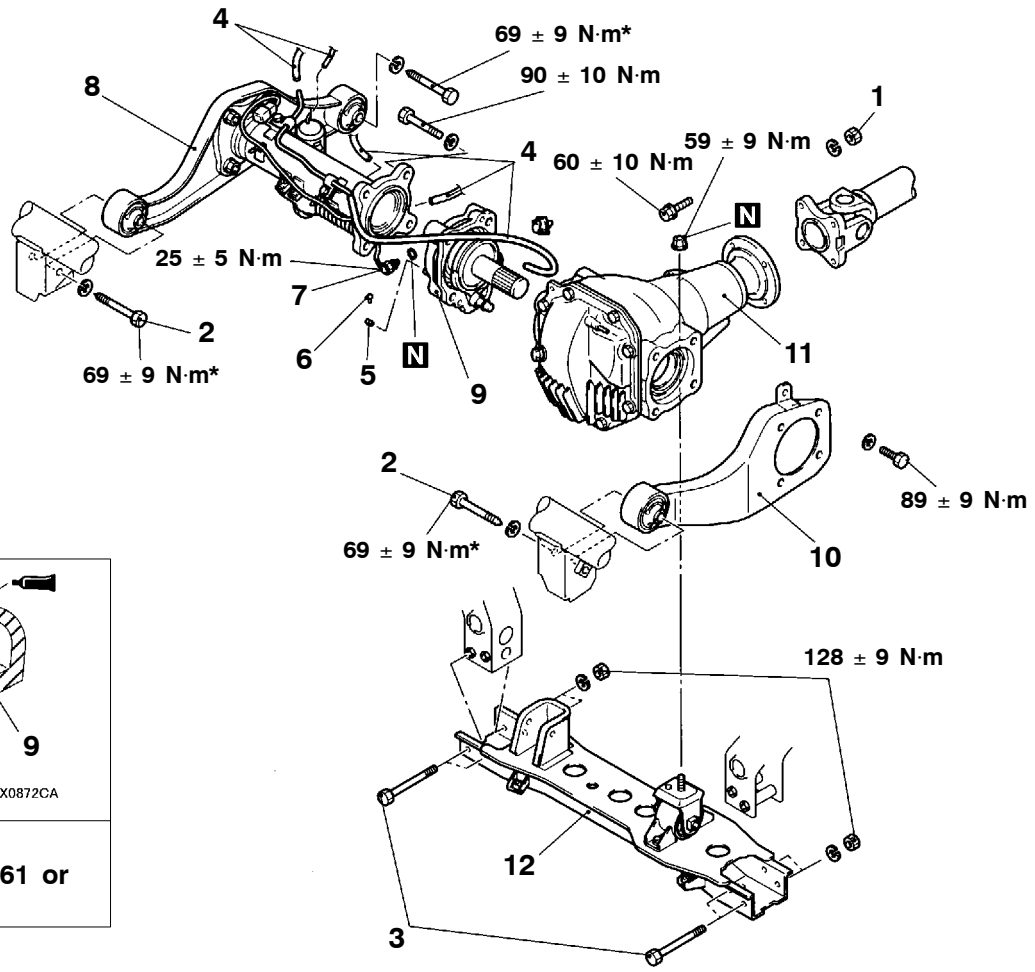


AX0967CA

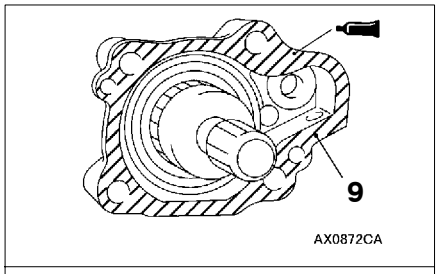


**Sealant:**
**3M ATD Part No. 8661 or equivalent**

**Removal steps**

◀A▶ ▶B◀ 1. Front propeller shaft connection
2. Front frame and differential bracket connection
3. Front frame and No.2 crossmember assembly connection
4. Vacuum hose
5. Collar
◀B▶ 6. Pin
7. Freewheel engage switch assembly
▶A◀ 8. Differential mounting bracket <R.H.> and housing tube assembly
9. Freewheel clutch assembly
▶A◀ 10. Differential mounting bracket <L.H.>
11. Differential carrier
12. No.2 crossmember assembly

Purchased from www.WorkshopManuals.co.uk

www.WorkshopManuals.co.uk

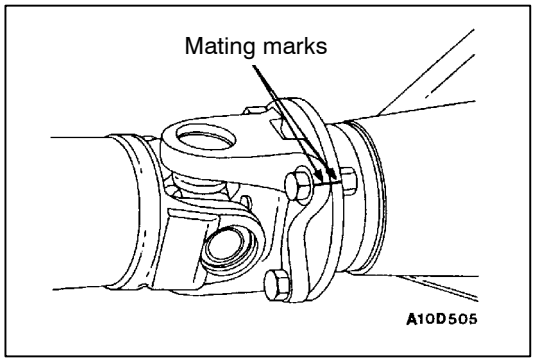


## REMOVAL SERVICE POINTS

### ◀A▶ FRONT PROPELLER SHAFT DISCONNECTION

Make the mating marks on the flange yoke and the differential carrier companion flange and then remove the front propeller shaft.

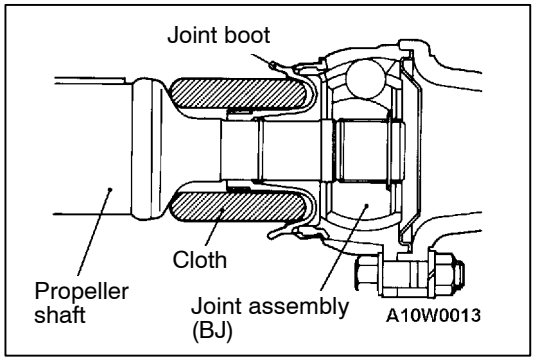


**Caution**

1. **Be careful not to damage joint boot by cramping with the bent propeller shaft joint.**
2. **Hang propeller shaft with wires to prevent it from falling.**

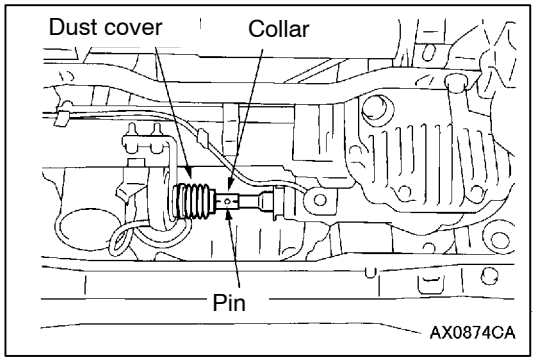


### ◀B▶ PIN REMOVAL

1. Remove one side of dust cover mounting part on the Vaccum Actuator Assembly.
2. Match a pin with a pin hole and remove the pin with with a punch.

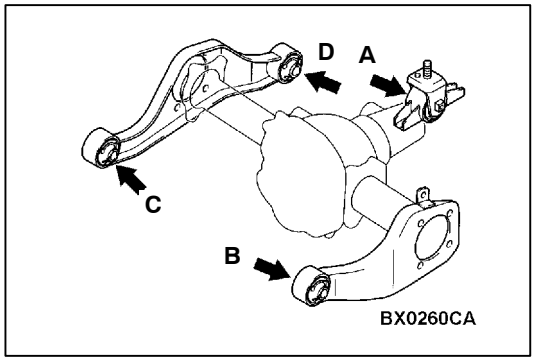


## INSTALLATION SERVICE POINTS

### ▶A◀ DIFFERENTIAL MOUNTING BRACKET ASSEMBLY TIGHTENING

Tighten differential mounting insulator in the order of A, B, C, D or A, C, B, D as shown in the left diagram.

### ▶B◀ FRONT PROPELLER SHAFT INSTALLATION

Install the front propeller shaft so that the mating marks of the flange yoke and the differential carrier companion flange are aligned.

**Caution**

**Do not tighten fasteners without removing grease from threads because fastner threads covered with oily products could become loose.**

Purchased from www.WorkshopManuals.co.uk

www.WorkshopManuals.co.uk

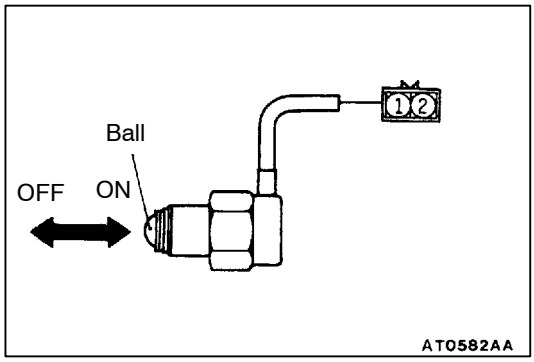


## INSPECTION

### FREEWHEEL ENGAGE SWITCH

| Shaft (switch) position | Terminal No. 1 | Terminal No. 2 |
|---|---|---|
| Pressed (ON) | ○ | ○ |
| Released (OFF) | | |

Purchased from www.WorkshopManuals.co.uk

www.WorkshopManuals.co.uk

# FREEWHEEL CLUTCH ASSEMBLY

## DISASSEMBLY AND REASSEMBLY

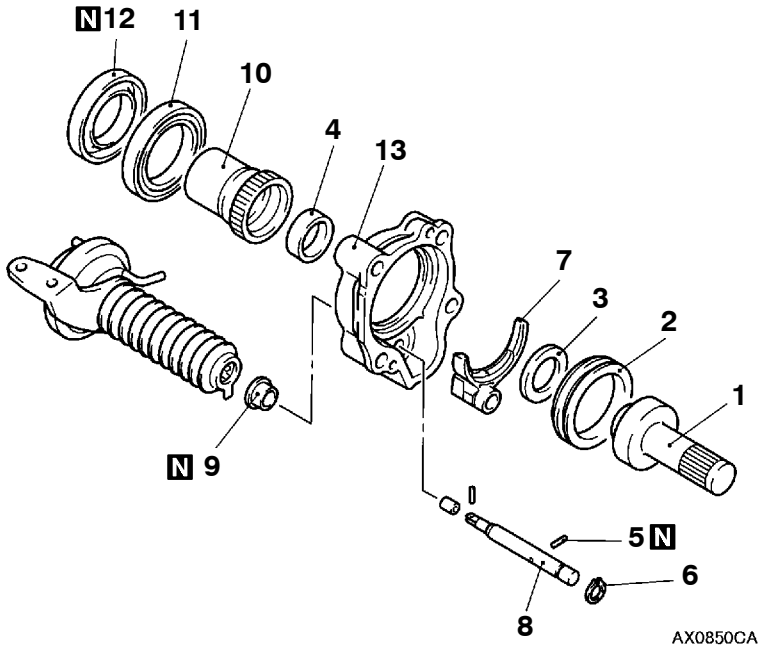


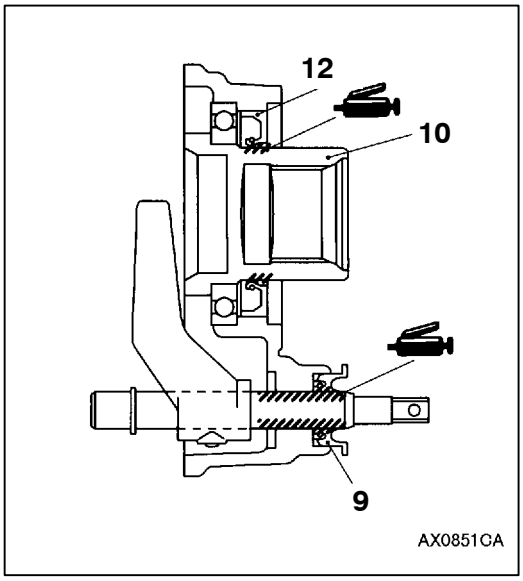


**Disassembly steps**

◀A▶ 1. Main shaft
2. Clutch sleeve
3. Spacer
◀A▶ ▶E◀ 4. Bearing
▶D◀ 5. Spring pin
6. Snap ring
7. Shift fork
8. Shift rod
▶C◀ 9. Oil seal
◀B▶ ▶B◀ 10. Clutch gear
◀B▶ ▶B◀ 11. Bearing
▶A◀ 12. Oil seal
13. Clutch housing

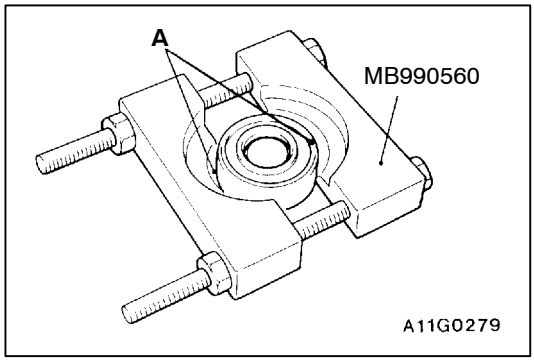


## DISASSEMBLY SERVICE POINTS

### ◀A▶ MAINSHAFT/BEARING REMOVAL

1. After the special tool has been installed as shown, tighten the nut of the special tool until the portion “A” of the special tool touches the bearing outer race.

Purchased from www.WorkshopManuals.co.uk

www.WorkshopManuals.co.uk

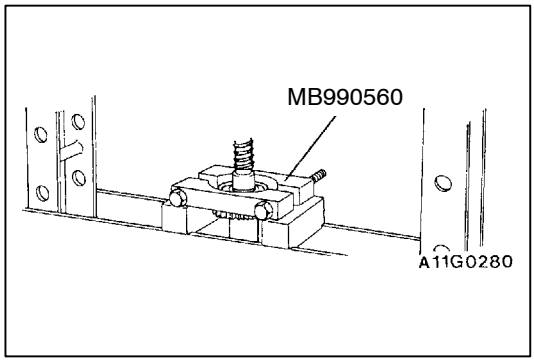


2. Press out the mainshaft from the bearing.

**Caution**
**Do not allow the mainshaft to drop.**

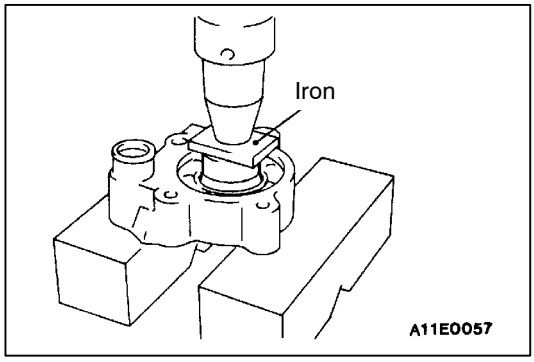


**◀B▶ CLUTCH GEAR/BEARING REMOVAL**

1. Use a press and steel plate to remove the clutch gear and bearing together.

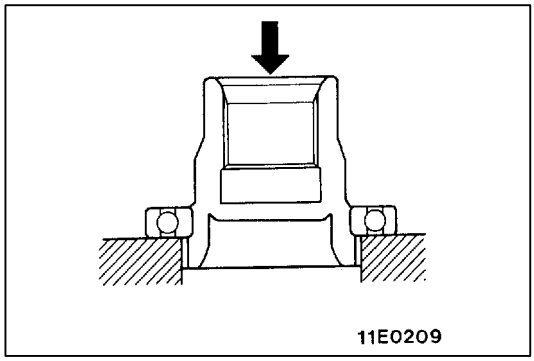


2. Use a press to hold the supports against the bearing inner race, and separate the clutch gear and bearing.

## REASSEMBLY SERVICE POINTS

**▶A◀ OIL SEAL INSTALLATION**

Use the special tool to tap the oil seal until it is flush with the clutch housing.

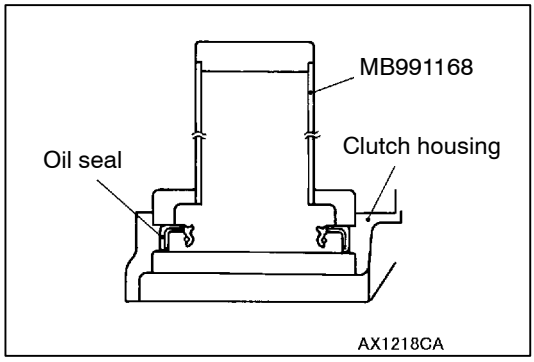


**▶B◀ BEARING/CLUTCH GEAR INSTALLATION**

1. Use the special tool to press-fit the bearing to the shoulder of the clutch gear.

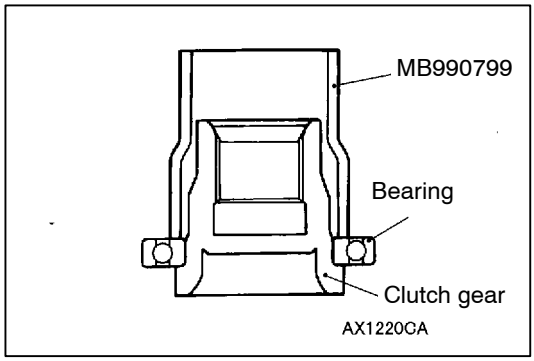


Purchased from www.WorkshopManuals.co.uk

www.WorkshopManuals.co.uk

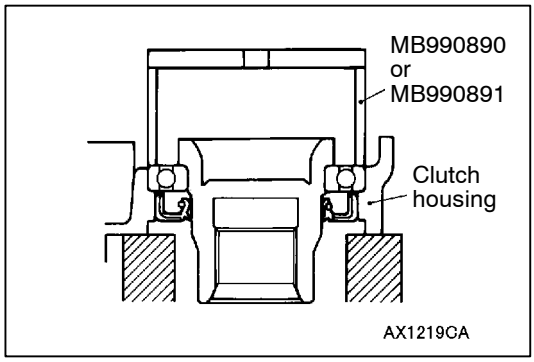


2. Use the special tool to press-fit the bearing to the side of the clutch housing.

   **Caution**
   **Place the special tool against the outer race of the bearing.**

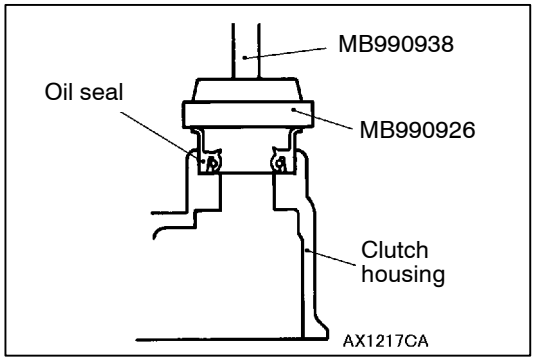


**▶C◀ OIL SEAL INSTALLATION**

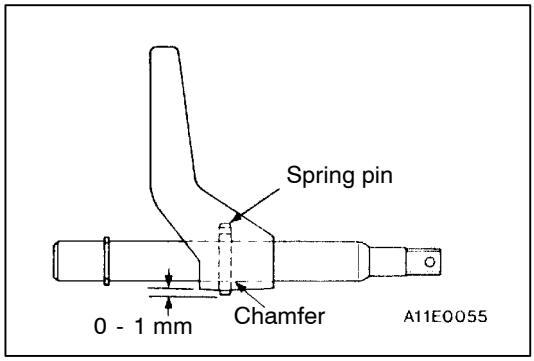


**▶D◀ SPRING PIN INSTALLATION**

Tap the spring pin from the chamfered side of the shift rod until the projection length becomes length shown in the illustration.

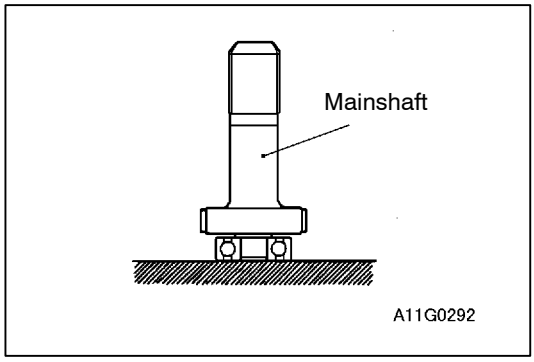


**▶E◀ BEARING INSTALLATION**

Press-fit the bearing to the shoulder of the mainshaft.

Purchased from www.WorkshopManuals.co.uk

www.WorkshopManuals.co.uk

# DIFFERENTIAL CARRIER

## DISASSEMBLY

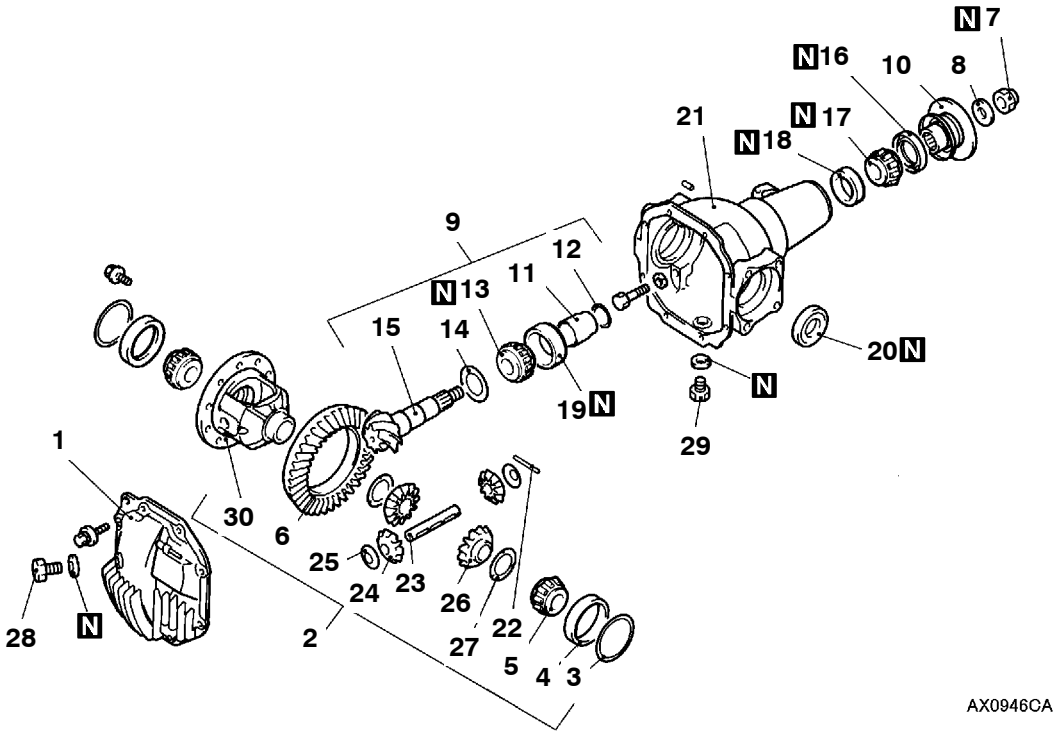


**Disassembly steps**

◀A▶ ● Inspection before disassembly
1. Cover
◀B▶ 2. Differential case assembly
3. Side bearing spacer
4. Side bearing outer race
◀C▶ 5. Side bearing inner race
◀D▶ 6. Drive gear
◀E▶ 7. Self-locking nut
8. Washer
◀F▶ 9. Drive pinion assembly
10. Companion flange
11. Drive pinion spacer
12. Drive pinion rear shim (for turning torque adjustment)
◀G▶ 13. Drive pinion front bearing inner race
14. Drive pinion front shim (for pinion height adjustment)
15. Drive pinion
◀H▶ 16. Oil seal
◀H▶ 17. Drive pinion rear bearing inner race
◀H▶ 18. Drive pinion rear bearing outer race
◀I▶ 19. Drive pinion front bearing outer race
20. Oil seal
21. Differential carrier
◀J▶ 22. Lock pin
23. Pinion shaft
24. Pinion gear
25. Pinion washer
26. Side gear
27. Side gear spacer
28. Filler plug
29. Drain plug
30. Differential case

Purchased from www.WorkshopManuals.co.uk

www.WorkshopManuals.co.uk

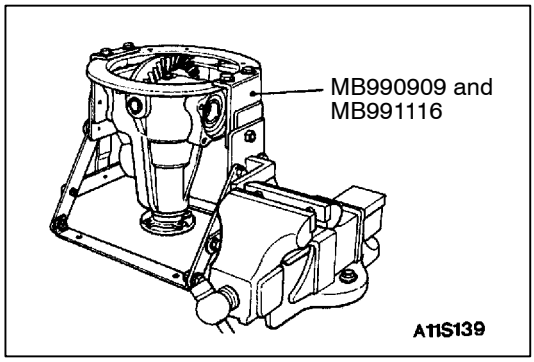


## DISASSEMBLY SERVICE POINTS

### ◀A▶ INSPECTION BEFORE DISASSEMBLY

1. Remove the cover and gasket.
2. Hold the special tool in a vise, and install the differential carrier assembly to the special tool.

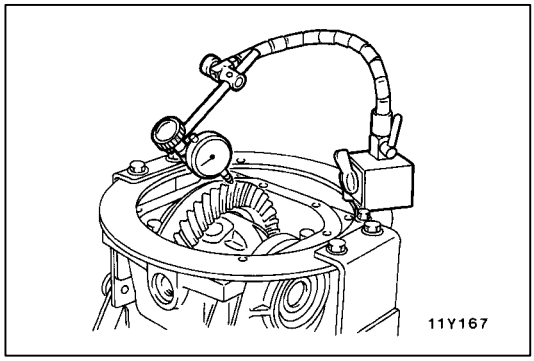


### DRIVE GEAR BACKLASH

1. With the drive pinion locked in place, use a dial gauge to measure the drive gear backlash in four or more places on the drive gear.

   **Standard value: 0.11 - 0.16 mm**

2. If the backlash is not within the standard value, adjust the drive gear backlash (See P.26-47).
3. After the adjustment, inspect the drive gear tooth contact.

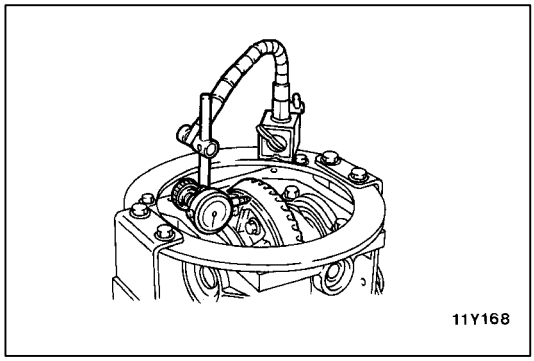


### DRIVE GEAR RUNOUT

1. Measure the drive gear runout at the shoulder on the reverse side of the drive gear.

   **Limit: 0.05 mm**

2. When runout exceeds the limit value, check for foreign object between drive gear rear side and differential case, or for loose drive gear installation bolts.
3. When check (2) gives normal results, reposition drive gear and differential case and remeasure.
4. If adjustment is impossible, replace differential case, or replace drive gear and pinion as a set.

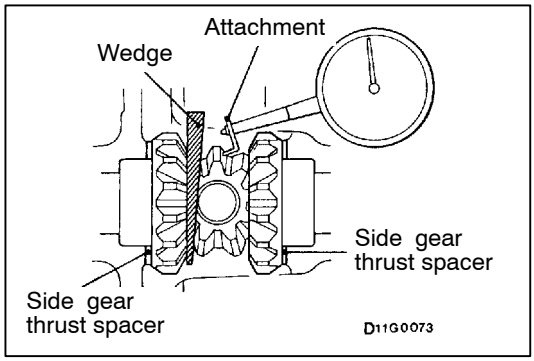


### DIFFERENTIAL GEAR BACKLASH

1. While locking the side gear with the wedge, measure the differential gear backlash with a dial indicator on the pinion gear.

   **Standard value: 0 - 0.076 mm**
   **Limit: 0.2 mm**

   Repeat the same procedure for both pinion gears.

Purchased from www.WorkshopManuals.co.uk

www.WorkshopManuals.co.uk

2. If the backlash exceeds the limit, adjust by using the side gear thrust spacers.
3. If adjustment is impossible, replace the side gear and pinion gear as a set.

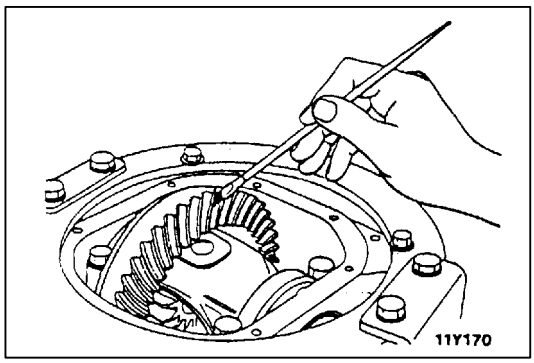


**DRIVE GEAR TOOTH CONTACT**

Check the tooth contact of drive gear by following the steps below.

1. Apply a thin, uniform coat of machine blue to both surfaces of the drive gear teeth.

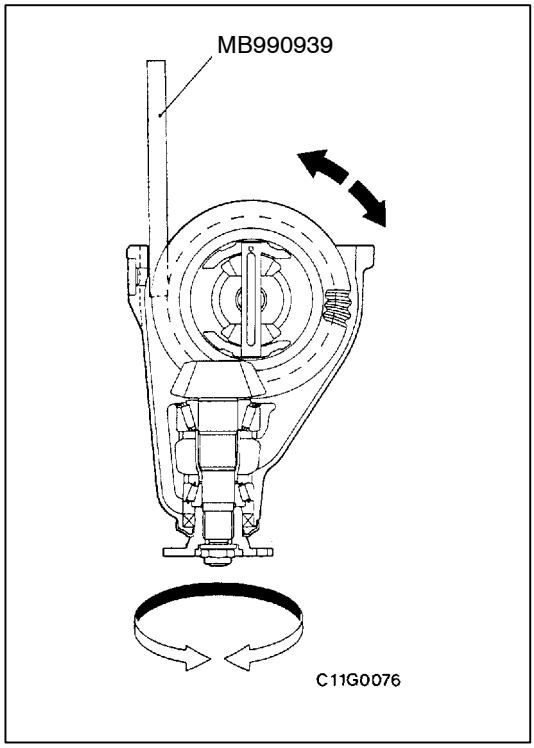


2. Insert the brass between the differential carrier and the differential case, and then rotate the companion flange by hand (once in the normal direction, and then once in the reverse direction) while applying a load to the drive gear so that the revolution torque (approximate 2.5 - 3.0 N·m) is applied to the drive pinion.

   **Caution**
   **If the drive gear is rotated too much, the tooth contact pattern will become unclear and difficult to check.**

3. Check the tooth contact condition of the drive gear and drive pinion.

Purchased from www.WorkshopManuals.co.uk

www.WorkshopManuals.co.uk

| Standard tooth contact pattern | Problem | Solution |
|---|---|---|
| 1 Narrow tooth side<br>2 Drive-side tooth surface (the side applying power during forward movement)<br>3 Wide tooth side<br>4 Coast-side tooth surface (the side applying power during reverse movement)<br> 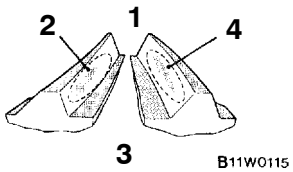 <br> | Tooth contact pattern resulting from excessive pinion height<br> 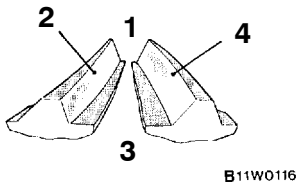 <br><br>The drive pinion is positioned too far from the centre of the drive gear. | 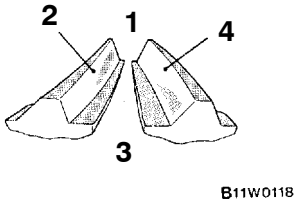 <br><br>Increase the thickness of the drive pinion rear shim, and position the drive pinion closer to the centre of the drive gear. Also, for backlash adjustment, position the drive gear farther from the drive pinion. |
| | Tooth contact pattern resulting from insufficient pinion height<br> 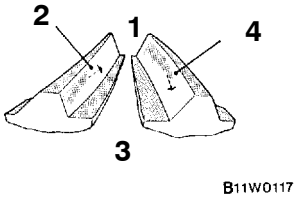 <br><br>The drive pinion is positioned too close to the centre of the drive gear. | 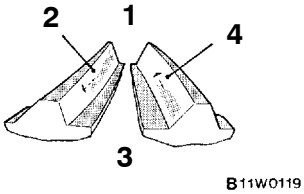 <br><br>Decrease the thickness of the drive pinion rear shim, and position the drive pinion farther from the centre of the drive gear. Also, for backlash adjustment, position the drive gear closer to the drive pinion. |

NOTE
Checking the tooth contact pattern is the way to confirm that the adjustments of the pinion height and backlash have been done properly. Continue to adjust the pinion height and backlash until the tooth contact pattern resembles the standard pattern.

If, even after adjustments have been made, the correct tooth contact pattern cannot be obtained, it means that the drive gear and the drive pinion have become worn beyond the allowable limit. Replace the gear set.

Purchased from www.WorkshopManuals.co.uk

www.WorkshopManuals.co.uk

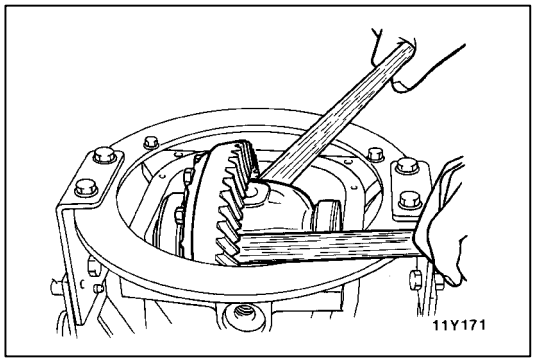


### ◀B▶ DIFFERENTIAL CASE ASSEMBLY REMOVAL

**Caution**
**When taking out the differential case assembly, be careful not to drop and damage the side bearing outer races.**

NOTE
Keep the right and left side bearings and side bearing adjusting spacers separate, so that they do not become mixed at the time of reassembly.

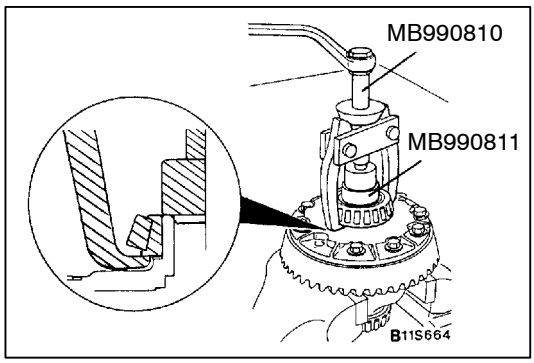


### ◀C▶ SIDE BEARING INNER RACE REMOVAL

NOTE
There are two notches provided (at the differential case side) for the claw part of the special tool; use the special tool at that position.
If notches of special tools touch the end of differential case and fail to hook with inner race, file the notches to be able to hook with inner race.

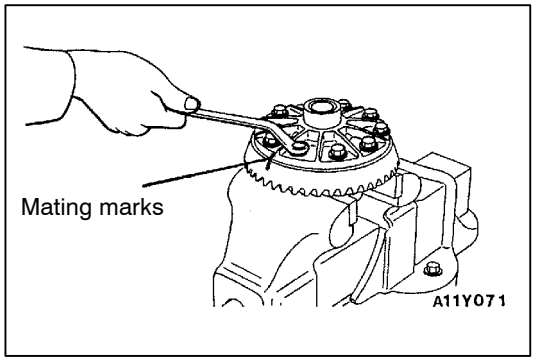


### ◀D▶ DRIVE GEAR REMOVAL

1. Make the mating marks to the differential case and the drive gear.
2. Loosen the drive gear attaching bolts in diagonal sequence to remove the drive gear.

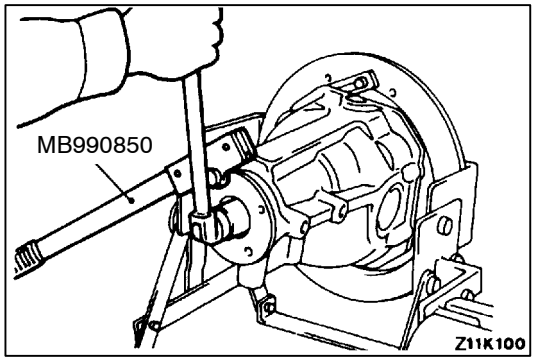


### ◀E▶ SELF-LOCKING NUT REMOVAL

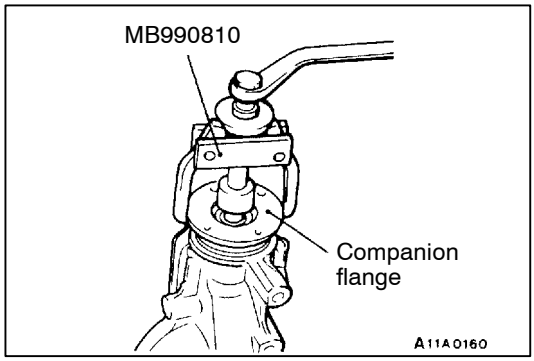


### ◀F▶ DRIVE PINION ASSEMBLY REMOVAL

1. Make mating marks on the drive pinion and companion flange.

   **Caution**
   **The mating mark made on the companion flange must not be on the coupling surface of the flange yoke and the front propeller shaft.**

2. Pull out the drive pinion together with the special tool.

Purchased from www.WorkshopManuals.co.uk

www.WorkshopManuals.co.uk

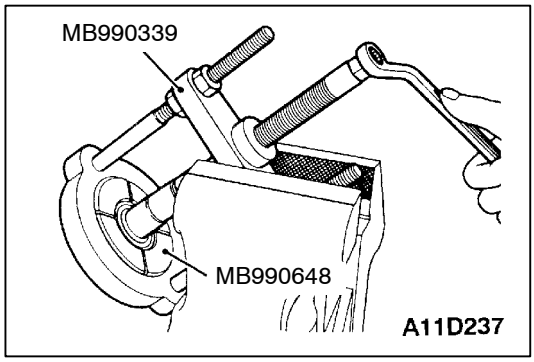


◀G▶ DRIVE PINION FRONT BEARING INNER RACE REMOVAL

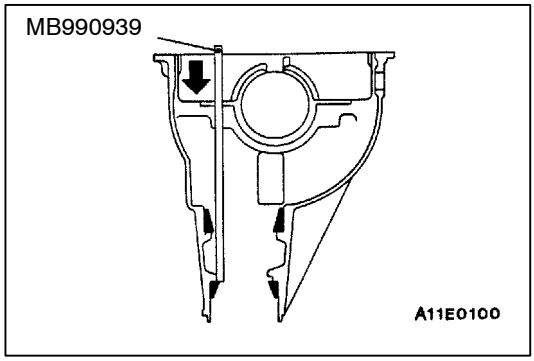


◀H▶ OIL SEAL/DRIVE PINION REAR BEARING INNER RACE/DRIVE PINION REAR BEARING OUTER RACE REMOVAL

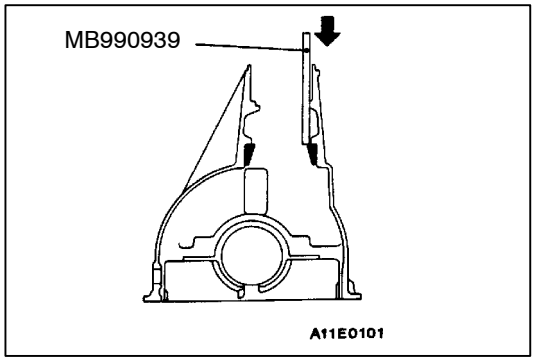


◀I▶ DRIVE PINION FRONT BEARING OUTER RACE REMOVAL

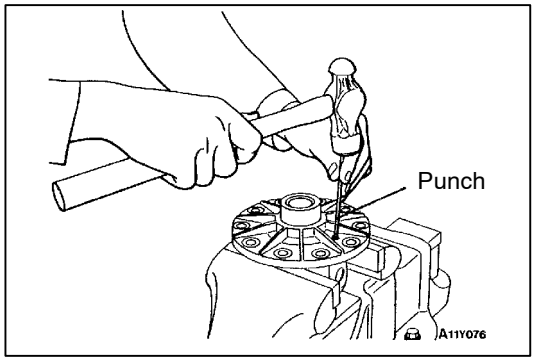


◀J▶ LOCK PIN REMOVAL

Purchased from www.WorkshopManuals.co.uk

www.WorkshopManuals.co.uk

## REASSEMBLY

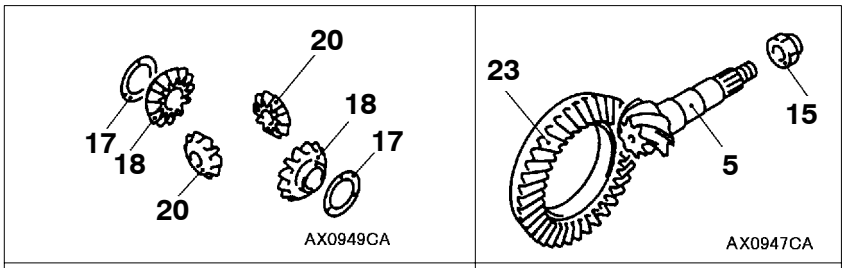


| Differential gear set | Final drive gear set |
|---|---|

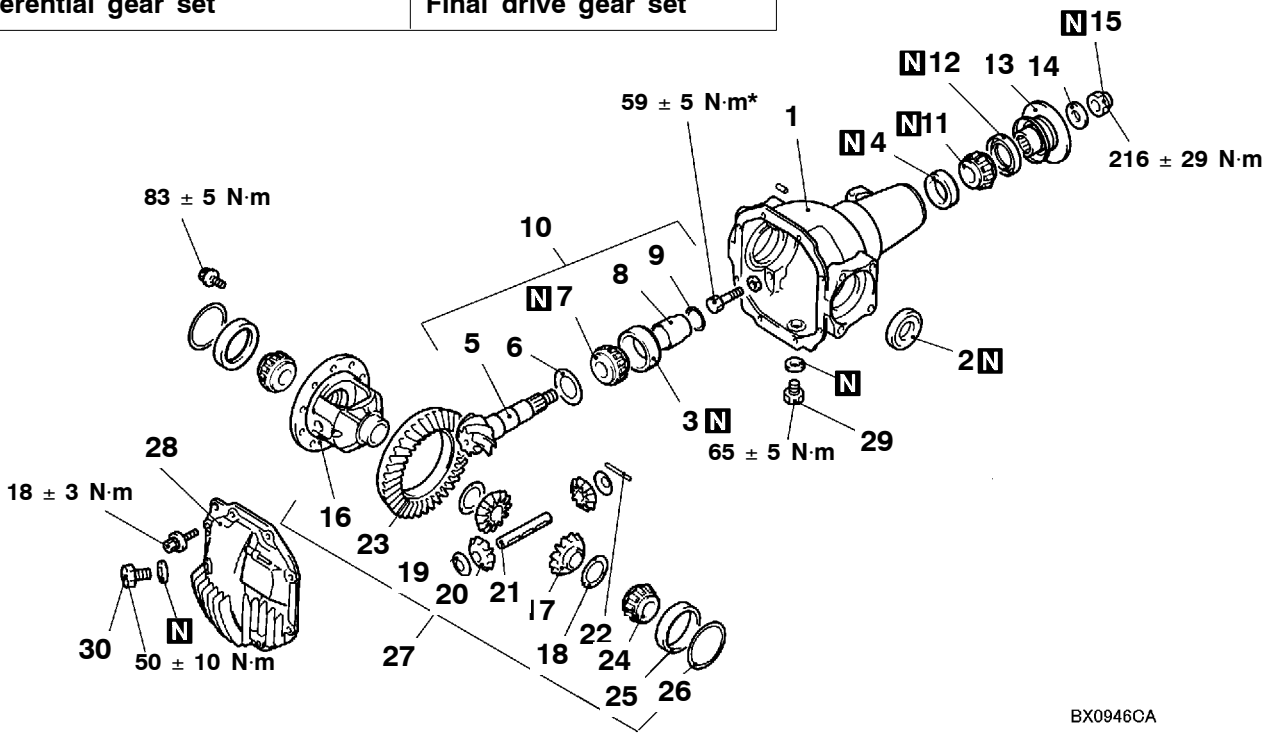


**Reassembly steps**

1. Differential carrier
▶A◀ 2. Oil seal
▶B◀ 3. Drive pinion front bearing outer race
▶C◀ 4. Drive pinion rear bearing outer race
▶D◀ ● Pinion height adjustment
5. Drive pinion
6. Drive pinion front shim (for pinion height adjustment)
7. Drive pinion front bearing inner race
8. Drive pinion spacer
▶E◀ ● Drive pinion turning torque adjustment
9. Drive pinion rear shim (for turning torque adjustment)
10. Drive pinion assembly
11. Drive pinion rear bearing inner race
12. Oil seal
13. Companion flange
14. Washer
15. Self-locking nut
16. Differential case
▶F◀ ● Differential gear backlash adjustment
17. Side gear spacer
18. Side gear
19. Pinion washer
20. Pinion gear
21. Pinion shaft
▶G◀ 22. Lock pin
▶H◀ 23. Drive gear
▶I◀ 24. Side bearing inner race
25. Side bearing outer race
▶J◀ ● Drive gear backlash adjustment
26. Side bearing spacer
27. Differential case assembly
28. Cover
29. Drain plug
30. Filler plug

NOTE
Specified torque with astarisks means that it is covered with oil.

Purchased from www.WorkshopManuals.co.uk

www.WorkshopManuals.co.uk

## Lubrication, Sealing and Adhesive Points

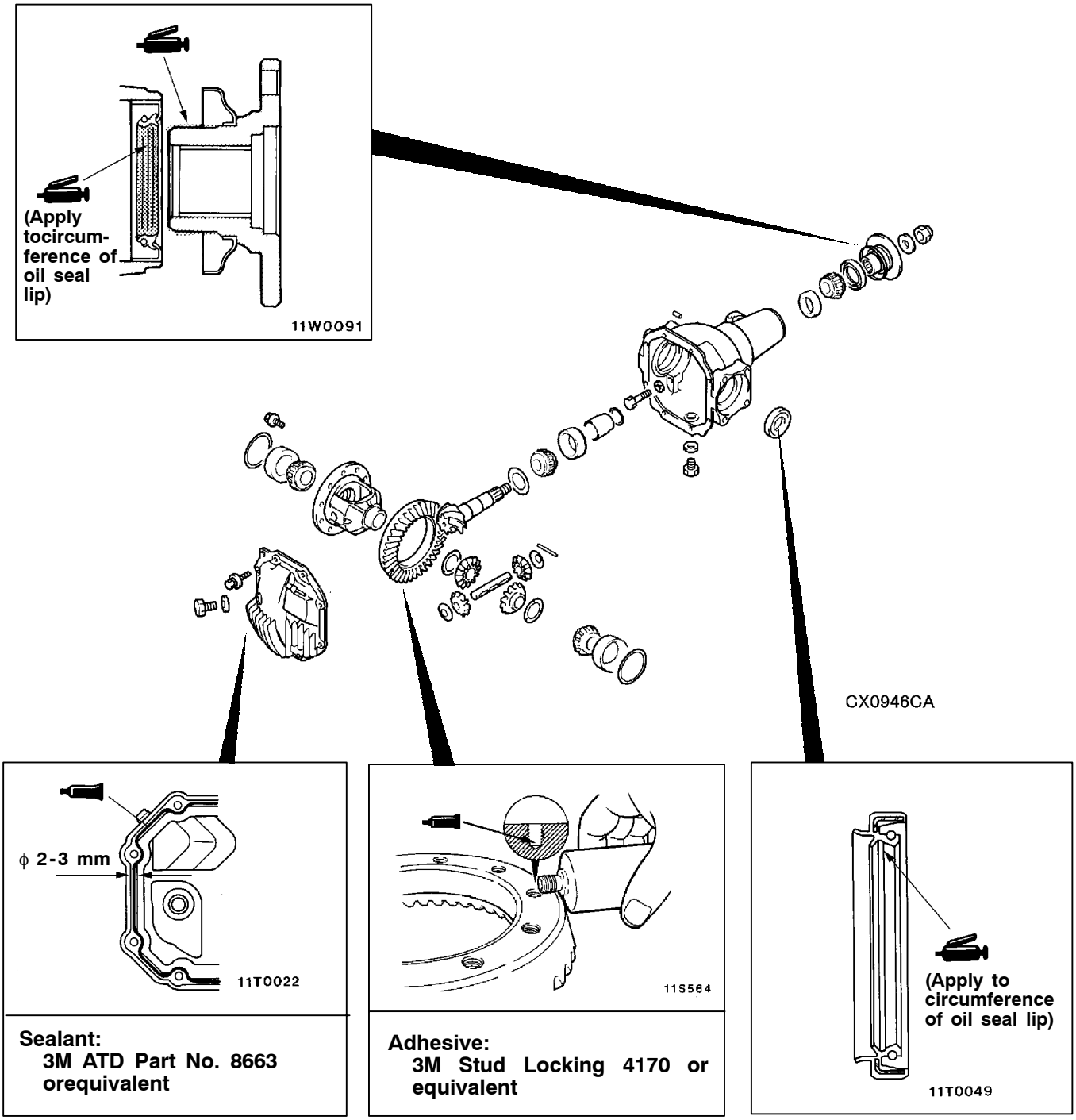


**Sealant:**
3M ATD Part No. 8663 orequivalent

**Adhesive:**
3M Stud Locking 4170 or equivalent

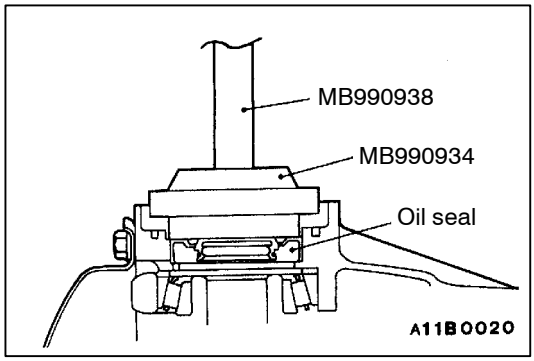


## REASSEMBLY SERVICE POINTS

### ▶A◀ OIL SEAL INSTALLATION

Purchased from www.WorkshopManuals.co.uk

www.WorkshopManuals.co.uk

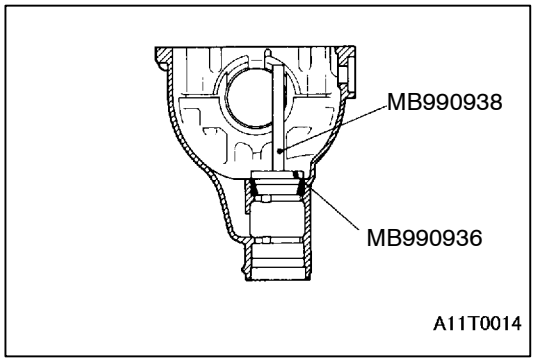


### ▶B◀ DRIVE PINION FRONT BEARING OUTER RACE INSTALLATION

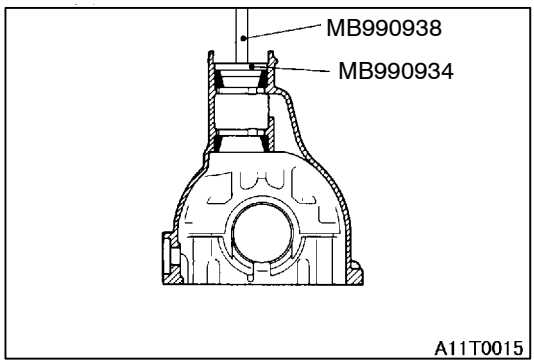


### ▶C◀ DRIVE PINION REAR BEARING OUTER RACE INSTALLATION

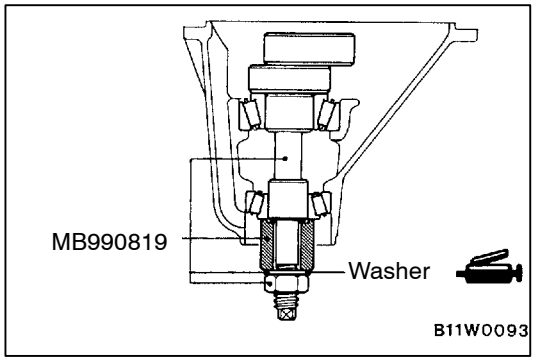


### ▶D◀ PINION HEIGHT ADJUSTMENT

Adjust the drive pinion height by the following procedure.

1. Apply multipurpose grease to the washer of the special tool.
2. Install the special tool, drive pinion front and rear bearing inner races to the gear carrier.

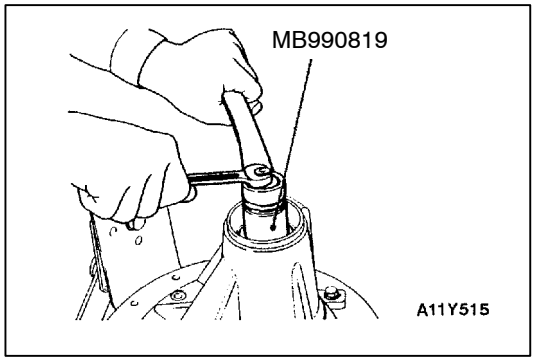


3. Tighten the nut of the special tool while measuring the turning torque of the drive pinion. Gradually keep tightening the nut of the special tool until the turning torque of the drive pinion (without oil seal) is at the standard value.

**Standard value:**
**(Without oil seal)**

| Bearing division | Bearing lubrication | Turning torque |
|---|---|---|
| New | None (With anti-rust agent) | 0.83 - 1.19 N·m |

NOTE
The special tool cannot be turned a full revolution, so turn it several times within the range of movement to run in the bearing, and then measure the turning torque.

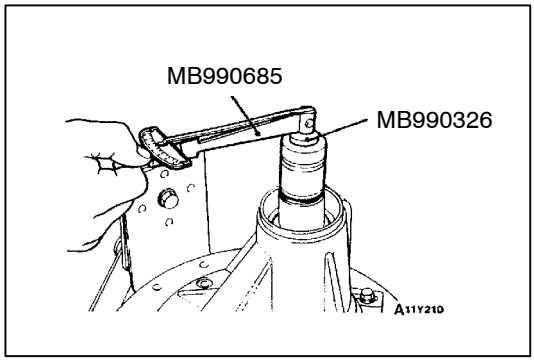


Purchased from www.WorkshopManuals.co.uk

www.WorkshopManuals.co.uk

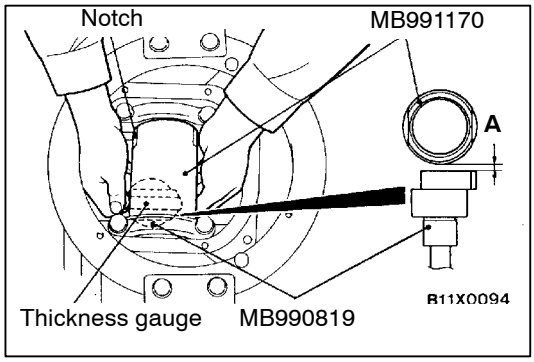


4. Clean the side bearing hub.
5. Install the special tools to the side bearing hub of the gear carrier, and then install the bearing cap.

   NOTE
   Always check that the notch is in the shown position and that the special tools are touching firmly against the side bearing hub.

6. Use a thickness gauge to measure the clearance (A) between the special tools.

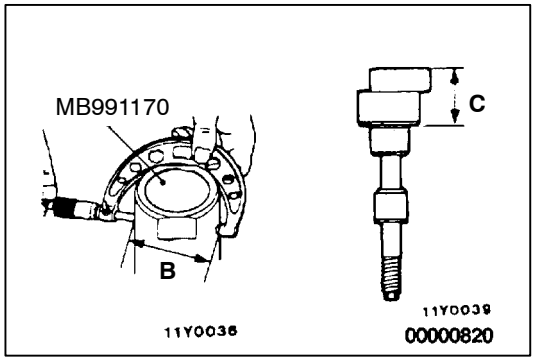


7. Remove the special tools (MB991170, MB990819).
8. Use a micrometer to measure the special tool in the places (B, C) shown in the illustration.

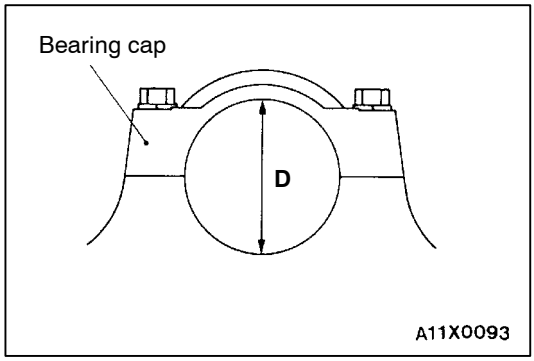


9. Install the bearing cap, and then use a cylinder gauge and micrometer to measure the inside diameter (D) of the bearing cap as shown in the illustration.
10. Calculate the thickness (E) of the required drive pinion front shim by the following formula, and then select a shim which most closely matches this thickness.
    E = A + B + C - 1/2D - 100.0

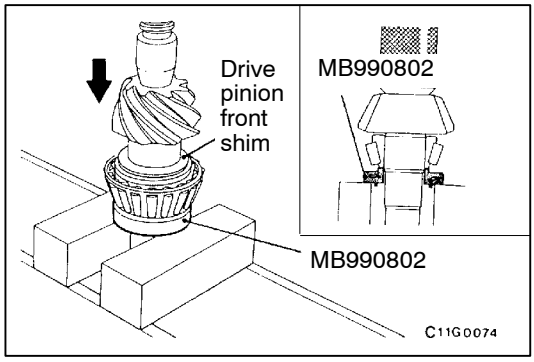


11. Fit the selected drive pinion front shim(s) to the drive pinion, and press-fit the drive pinion front bearing inner race by using the special tool.

### ▶E◀ DRIVE PINION TURNING TORQUE ADJUSTMENT

Adjust the drive pinion rotation torque by using the following procedure:

1. Insert the drive pinion into the gear carrier, and then install the drive pinion spacer, the drive pinion rear shim, the drive pinion rear bearing inner race, and the companion flange in that order.

   NOTE
   Do not install the oil seal.

Purchased from www.WorkshopManuals.co.uk

www.WorkshopManuals.co.uk

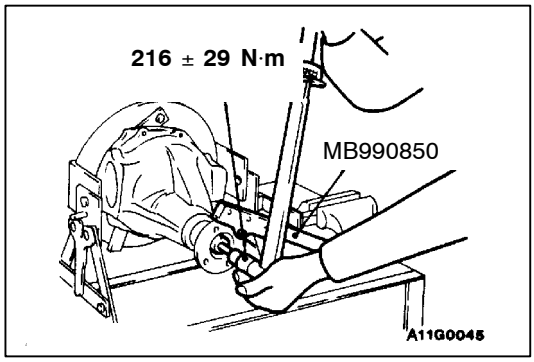


2. Tighten the companion flange to the specified torque by using the special tool.

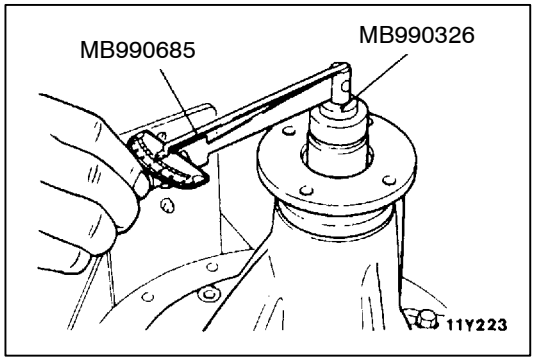


3. Measure the drive pinion turning torque (without the oil seal) by using the special tools.

**Standard value:**
**(Without oil seal)**

| Bearing division | Bearing lubrication | Turning torque |
|---|---|---|
| New | None (With anti-rust agent) | 0.83 - 1.19 N·m |

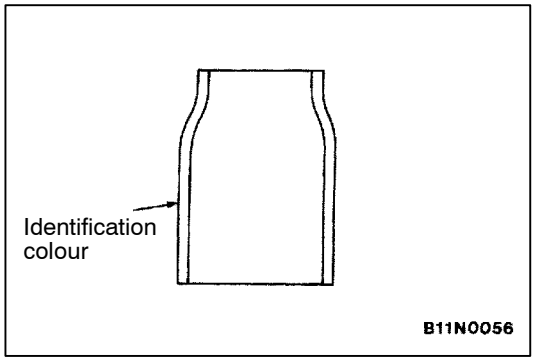


4. If the drive pinion turning torque is not within the range of the standard value, adjust the preload by replacing the drive pinion rear shim (s) or the drive pinion spacer.

NOTE
When selecting the drive pinion rear shims, if the number of shims is large, reduce the number of shims to a minimum by selecting the drive pinion spacers. Also, select the drive pinion spacer from the following two types.

| Drive pinion spacer height (mm) | Identification colour |
|---|---|
| 56.67 | White |
| 57.01 | - |

NOTE
Apply gear oil around the circumference of companion flange (and the mating surface of oil seal) when press fitting oil seal into companion flange.

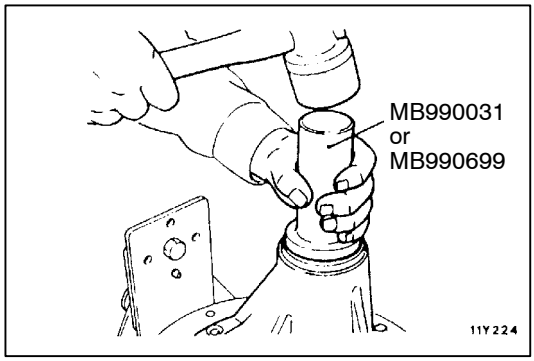


5. Remove the companion flange and drive pinion again. Then, after inserting the drive pinion rear bearing inner race into the gear carrier, use the special tool to press-fit the oil seal.

Purchased from www.WorkshopManuals.co.uk

www.WorkshopManuals.co.uk

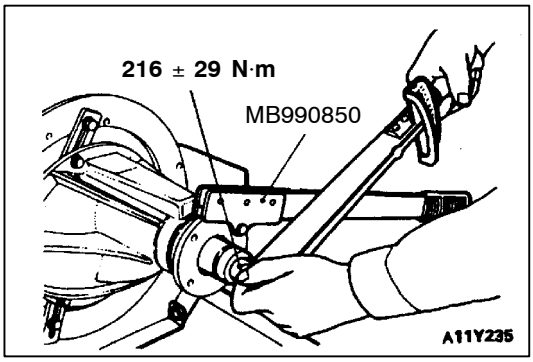


6. Install the drive pinion assembly and companion flange with mating marks properly aligned, and tighten the companion flange self-locking nut to the specified torque by using the special tools.

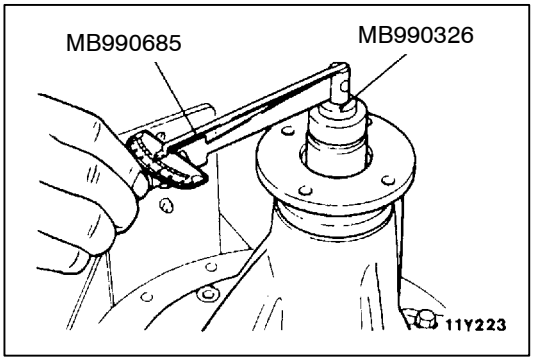


7. Measure the drive pinion turning torque (with the oil seal) by using the special tools.

   **Standard value:**
   **(With oil seal)**

| Bearing division | Bearing lubrication | Turning torque |
|---|---|---|
| New | None (With anti-rust agent) | 0.93 - 1.28 N·m |
| | Gear oil applied | 0.97 - 1.32 N·m |

8. If the drive pinion turning torque is not within the standard value, check the tightening torque of the companion flange self-locking nut and the oil seal.

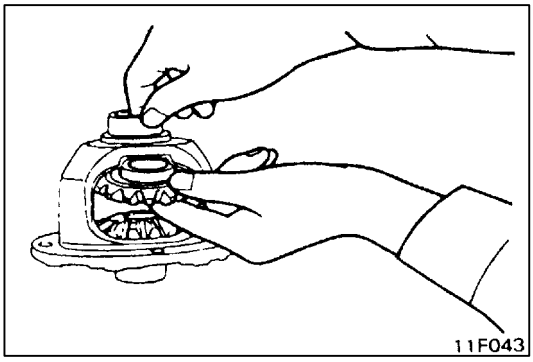


## ▶F◀ DIFFERENTIAL GEAR BACKLASH ADJUSTMENT

1. Assemble the side gears, side gear spacers, pinion gears and pinion washers into the differential case.
2. Temporarily install the pinion shaft.

   NOTE
   Do not drive in the lock pin yet.

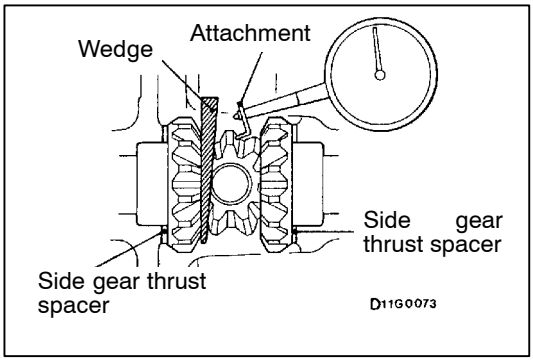


3. Insert a wedge between the side gear and the pinion shaft to lock the side gear.
4. Measure the differential gear backlash with a dial indicator on the pinion gear.

   **Standard value: 0 - 0.076 mm**

   **Limit: 0.2 mm**

5. If the differential gear backlash exceeds the limit, adjust the backlash by installing thicker side gear spacers.

Purchased from www.WorkshopManuals.co.uk

www.WorkshopManuals.co.uk

6. If adjustment is not possible, replace the side gears and pinion gears as a set.
7. Measure the differential gear backlash once again, and confirm that it is within the limit.

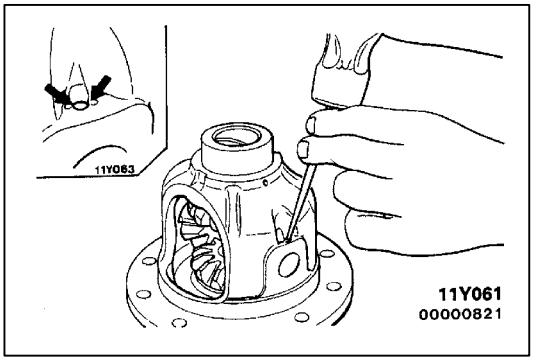


### ▶G◀ LOCK PIN INSTALLATION

1. Align the pinion shaft lock pin hole with the differential case lock pin hole, and drive in the lock pin.
2. Stake the lock pin with a punch at two points.

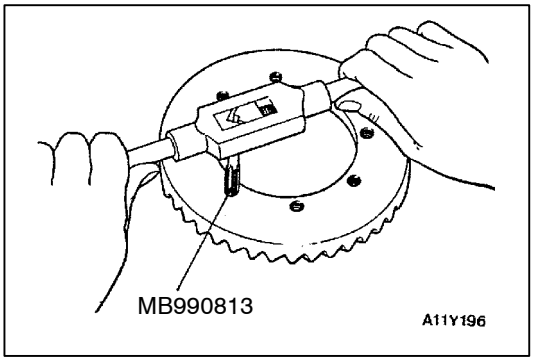


### ▶H◀ DRIVE GEAR INSTALLATION

1. Clean the drive gear attaching bolts.
2. Remove the adhesive adhered to the threaded holes of the drive gear by turning the special tool (tap M10 x 1.25), and then clean the threaded holes by applying compressed air.

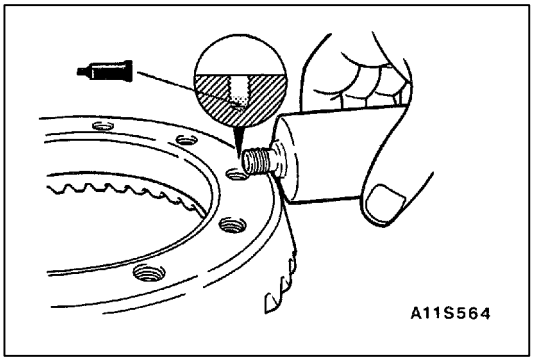


3. Apply the specified adhesive to the threaded holes of the drive gear.

   **Specified adhesive:**
   **3M Stud Locking 4170 or equivalent**
4. Install the drive gear onto the differential case with the mating marks properly aligned. Tighten the bolts to the specified torque in a diagonal sequence.

   **Tightening torque: 83 ± 5 N·m**

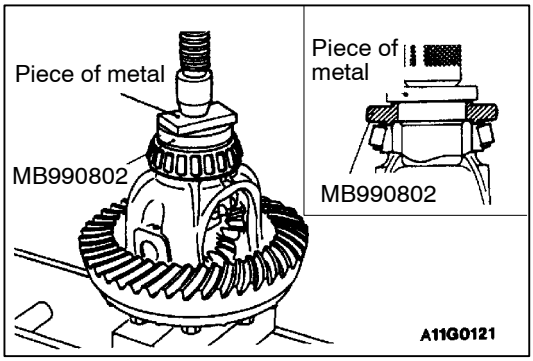


### ▶I◀ SIDE BEARING INNER RACE INSTALLATION

Purchased from www.WorkshopManuals.co.uk

www.WorkshopManuals.co.uk

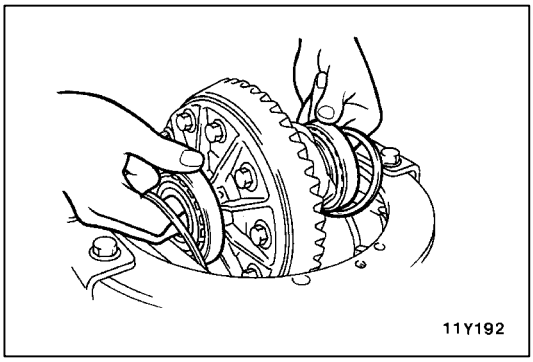


## ▶J◀ DRIVE GEAR BACKLASH ADJUSTMENT

Adjust the drive gear backlash by the following procedures:

1. Install the side bearing spacers, which are thinner than those removed, to the side bearing outer races, and then mount the differential case assembly into the gear carrier.

   NOTE
   Select side bearing spacers with the same thickness for both the drive pinion side and the drive gear side.

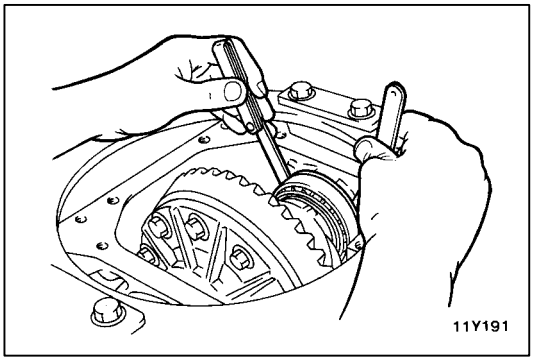


2. Push the differential case assembly to one side, and measure the clearance between the gear carrier and the side bearing adjusting spacer with a thickness gauge.

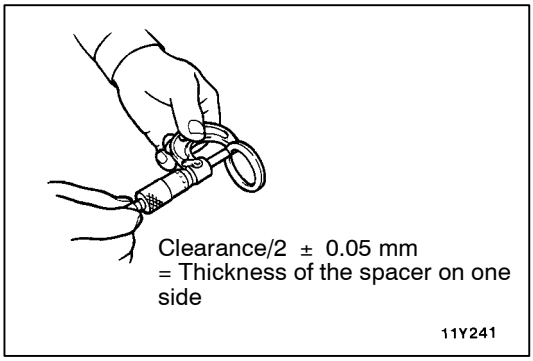


3. Measure the thickness of the side bearing adjusting spacers on one side, select two pairs of spacers which correspond to that thickness plus one half of the clearance plus 0.05 mm, and then install one pair each to the drive pinion side and the drive gear side.

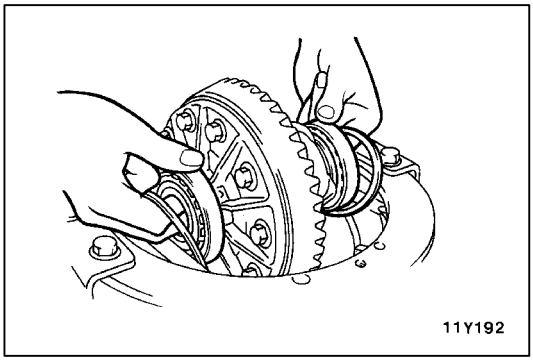


4. Install the side bearing adjusting spacers and differential case assembly, as shown in the illustration, to the gear carrier.

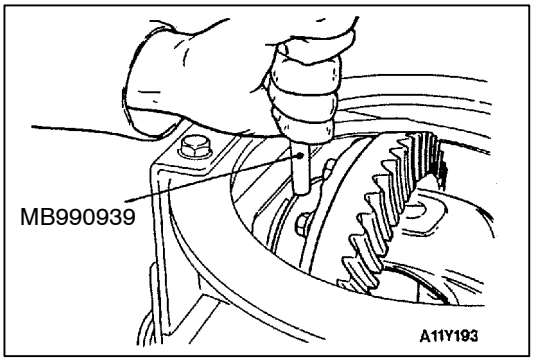


5. Tap the side bearing adjusting spacers with the special tool to fit them to the side bearing outer race.

Purchased from www.WorkshopManuals.co.uk

www.WorkshopManuals.co.uk

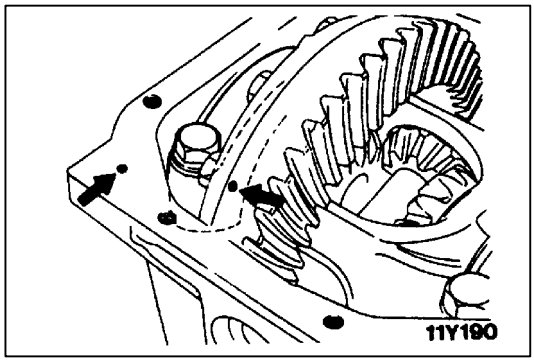


6. Align the mating marks on the gear carrier and the bearing cap, and then tighten the bearing cap.

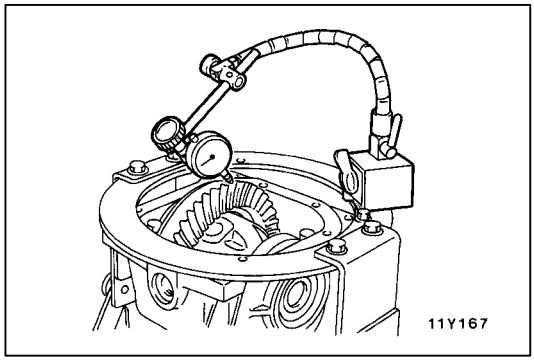


7. With the drive pinion locked in place, measure the drive gear backlash with a dial indicator on the drive gear.

   NOTE
   Measure at four points or more on the circumference of the drive gear.

   **Standard value: 0.11 - 0.16 mm**

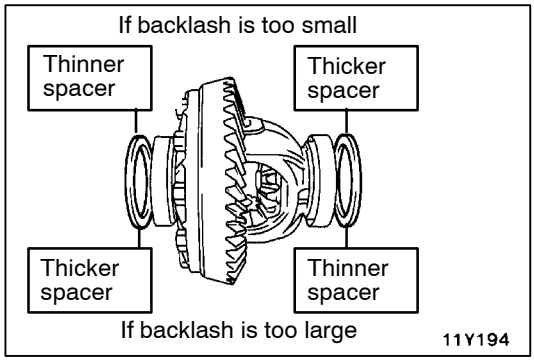


8. Change the side bearing adjusting spacers as illustrated, and then adjust the drive gear backlash between the drive gear and the drive pinion.

   NOTE
   When increasing the number of side bearing adjusting spacers, use the same number for each, and as few as possible.

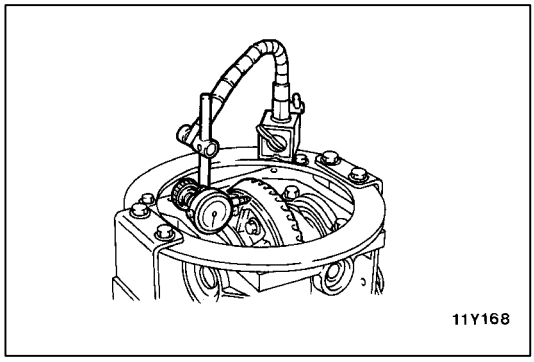


9. Check the drive gear and drive pinion for tooth contact. If poor contact is evident, make adjustment. (Refer to P. 26-39.)
10. Measure the drive gear runout at the shoulder on the reverse side of the drive gear.

    **Limit: 0.05 mm**

11. If the drive gear runout exceeds the limit, reinstall by changing the phase of the drive gear and differential case, and remeasure.
12. If adjustment is not possible, replace the differential case or replace the drive gear and drive pinion as a set.

Purchased from www.WorkshopManuals.co.uk

www.WorkshopManuals.co.uk

# SOLENOID VALVE, VACUUM PIPE, VACUUM TANK

## REMOVAL AND INSTALLATION

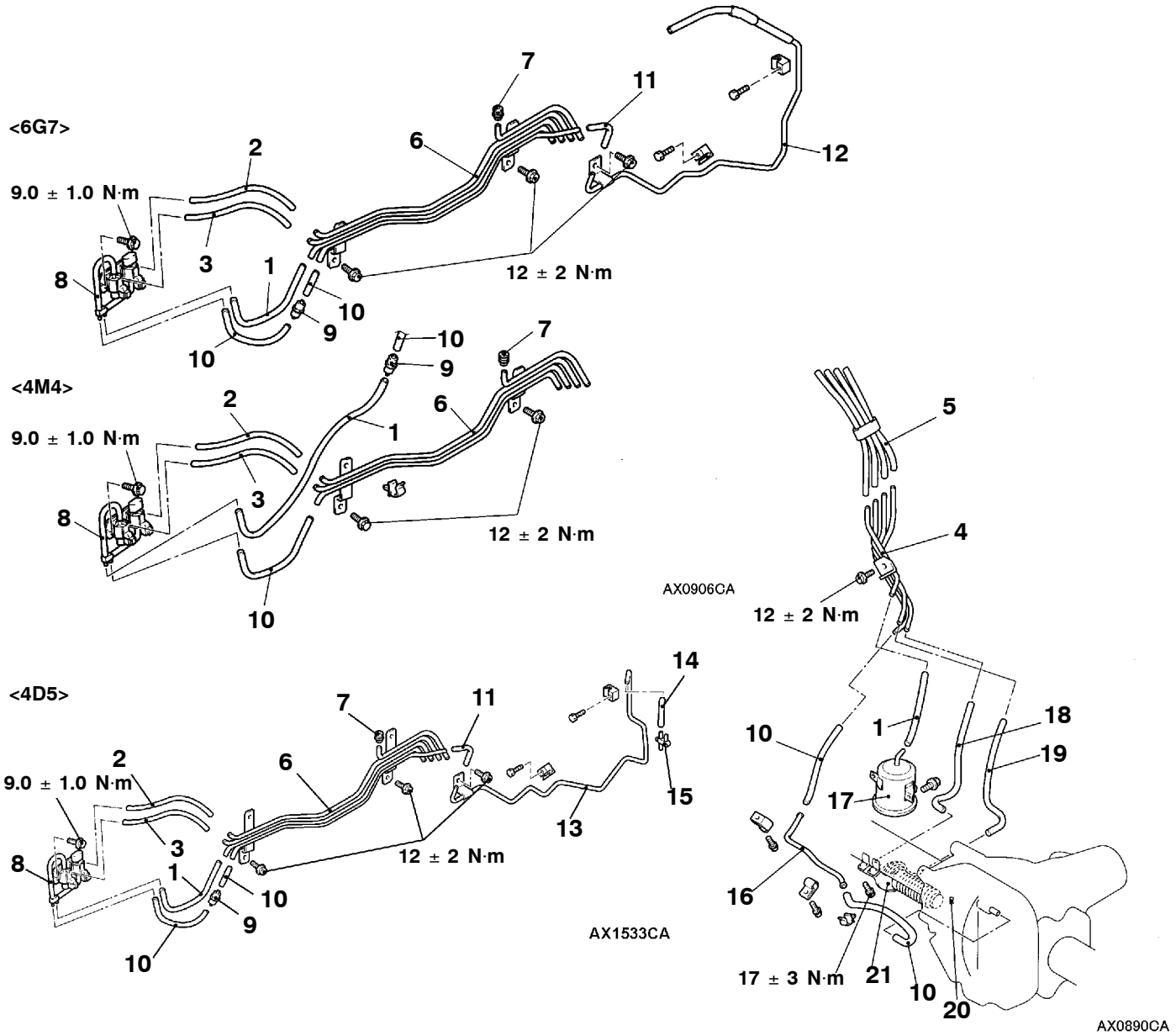


**Solenoid valve assembly, Vacuum tank assembly removal steps**

▶A◀ 1. Vacuum hose (white stripe)
▶A◀ 2. Vacuum hose (blue stripe)
▶A◀ 3. Vacuum hose (yellow stripe)
4. Vacuum pipe assembly
5. Vacuum hose assembly
6. Vacuum pipe assembly
7. Breather cap
8. Solenoid valve assembly
▶B◀ 9. Check valve
10. Vacuum hose
11. Vacuum hose
12. Vacuum pipe assembly (6G7)
13. Vacuum pipe assembly (4D5)
14. Vacuum hose
15. Vacuum terminal
16. Breather pipe
17. Vacuum tank assembly

**Vacuum actuator assembly removal steps**

▶A◀ 18. Vacuum hose (blue stripe) connection
▶A◀ 19. Vacuum hose (yellow stripe) connection
◀A▶ 20. Pin
21. Vacuum actuator assembly

Purchased from www.WorkshopManuals.co.uk

www.WorkshopManuals.co.uk

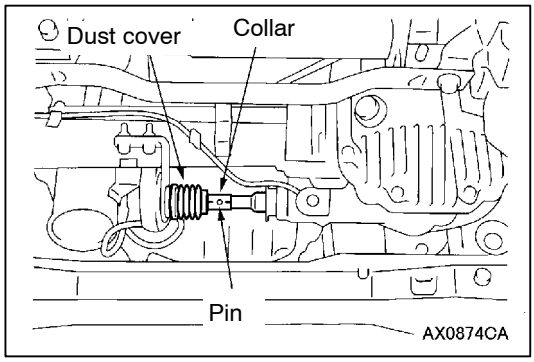


## REMOVAL SERVICE POINT

### ◀A▶ PIN REMOVAL

1. Remove one side of dust cover mounting part on vacuum actuator assembly.
2. Match collar of pin hole with that of another pin hole to remove a pin with a punch.

## INSTALLATION SERVICE POINTS

### ▶A◀ VACUUM HOSE INSTALLATION

Match collar of each pipe of vacuum hose and solenoid valve and vacum pipe and assemble them.

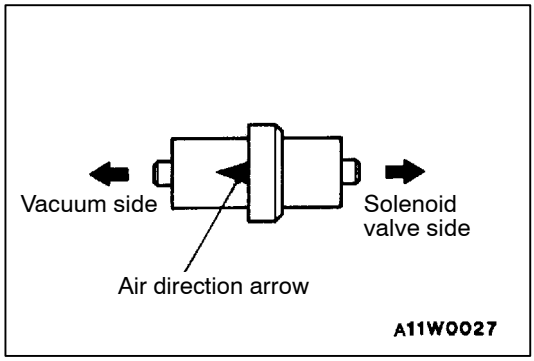


### ▶B◀ CHECK VALVE INSTALLATION

Install so that air direction arrow points to the vacuum side.

Purchased from www.WorkshopManuals.co.uk

www.WorkshopManuals.co.uk

# FRONT DIFFERENTIAL MOUNT

## REMOVAL AND INSTALLATION

**Caution**

***: Indicates parts which should be temporarily tightened, and then fully tightened with the vehicle on the ground in the unladen condition.**

**Pre-removal and Post-installation**
- Under Cover and Skid Plate Removal and Installation
- Gear Oil Draining and Refill (Refer to P.26-11.)
- Drive Shaft Removal and Installation (Refer to P.26-16.)
- Inner Shaft Removal and Installation (Refer to P.26-24.)

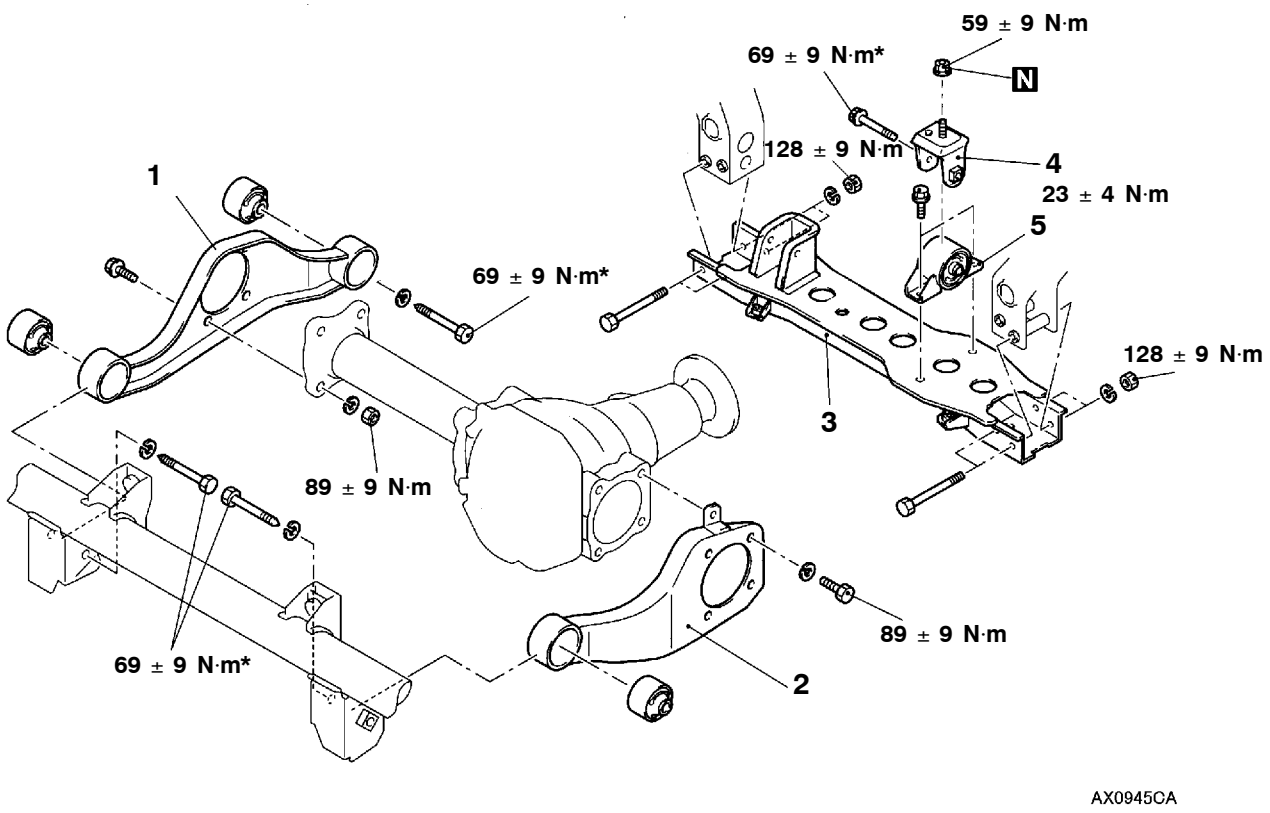


**Differential mount bracket assembly(L.H./R.H.) removal steps**

- Drive shaft assembly removal (refer to P.26-16)

▶A◀ 1. Differential mount bracket assembly (R.H.)

▶A◀ 2. Differential mount bracket assembly (L.H.)

**Differential mount bracket assembly (rear) removal steps**

3. No.2 crossmember
4. Differential support bracket
- Differential carrier & housing assembly

▶A◀ 5. Differential mount bracket assembly (rear)

Purchased from www.WorkshopManuals.co.uk

www.WorkshopManuals.co.uk

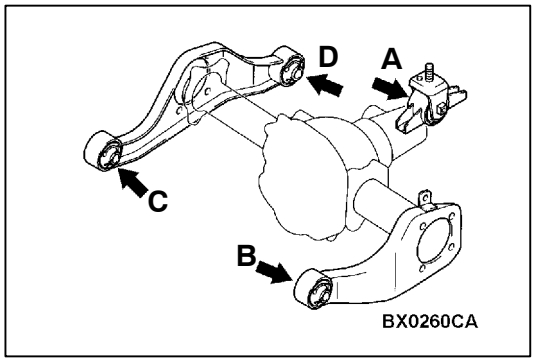


## INSTALLATION SERVICE POINT

### ▶A◀ DIFFERENTIAL MOUNT BRACKET ASSEMBLY INSTALLATION

Tighten the bolts shown in the diagram with the specified torque in the order of A, B, C, D or A, C, B, D.

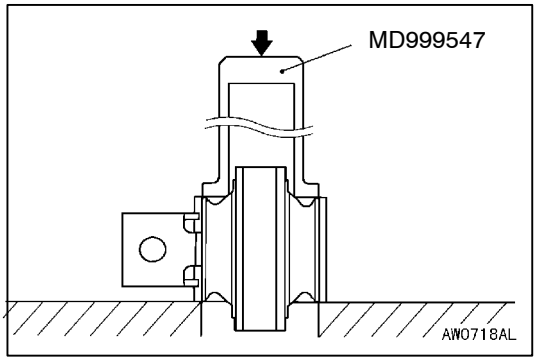


## DIFFERENTIAL MOUNTING INSULATOR REPLACEMENT

### DIFFERENTIAL MOUNTING BRACKET <L.H., R.H.-FRONT, REAR>

1. Remove insulator with special tools.

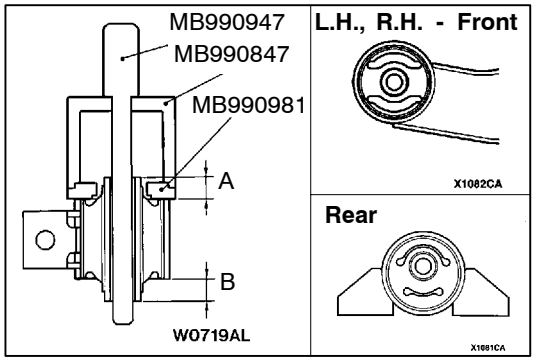


2. By using special tools along with a hydraulic press, press fit each insulator to adjust until the hollow part faces as shown and the difference between dimensions A, B should be within 0.7 mm.

### DIFFERENTIAL MOUNT BRACKET <R.H.-REAR>

1. Remove the insulator with the special tool.

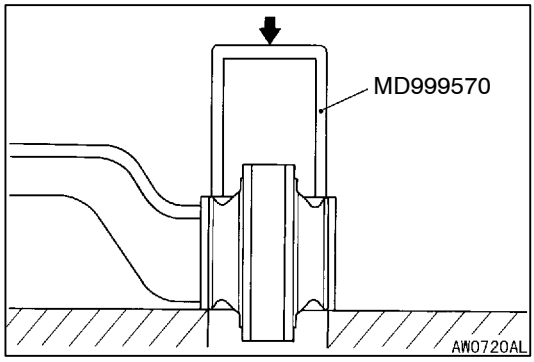


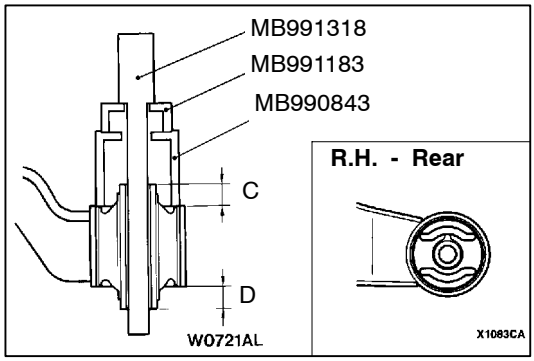


2. By using special tools along with a hydraulic press, press fit each insulator to adjust until the hollow part faces as shown and the difference between dimensions C, D should be within 0.7 mm.

Purchased from www.WorkshopManuals.co.uk

www.WorkshopManuals.co.uk

# REAR AXLE

**Click on the applicable bookmark to selected the required model year.**

Purchased from www.WorkshopManuals.co.uk

www.WorkshopManuals.co.uk


# REAR AXLE

## CONTENTS

**GENERAL INFORMATION** . . . . . 2

**SERVICE SPECIFICATIONS** . . . . . 3

**LUBRICANTS** . . . . . 3

**SEALANTS** . . . . . 4

**SPECIAL TOOLS** . . . . . 5

**ON-VEHICLE SERVICE** . . . . . 8

Rear Axle Total Backlash Check . . . . . 8

Gear Oil Level Check . . . . . 8

Wheel Bearing Axial Play Check . . . . . 8

Rear Differential Lock Detection Switch Check . . . . 9

Rear Differential Lock System Air Leakage Check . . . . . 9

**REAR HUB ASSEMBLY** . . . . . 10

**KNUCKLE** . . . . . 13

**DRIVE SHAFT** . . . . . 14

**REAR DIFFERENTIAL LOCK** . . . . . 20

**DIFFERENTIAL CARRIER** . . . . . 23

Purchased from www.WorkshopManuals.co.uk

www.WorkshopManuals.co.uk

# GENERAL INFORMATION

The rear axle has the following features.

- D.O.J.-type on the differential side and B.J.-type on the hub side constant velocity joints are featured in the drive shaft.
- Large capacity and high rigidity taper-roller type unit bearing in the wheel bearing is featured.
- The hybrid LSD and differential lock with LSD which benefit driving on muddy and rough roads are featured as an option.
- ABS rotor to detect wheel speed is press-fitted in the drive shaft.

NOTE
The structure of normal differential and hybrid LSD is basically the same as featured in existing models.

**SPECIFICATIONS**

| Item | | | Normal Differential | Hybrid LSD | Differential Lock with LSD |
|---|---|---|---|---|---|
| Reduction gear type | | | Hypoid gear | Hypoid gear | Hypoid gear |
| Reduction ratio | | | 4.900*1, 3.917*2, 4.100*3, 4.300*4 | 4.900*1, 3.917*2, 4.100*3, 4.300*4 | 4.900*1, 3.917*2, 4.100*3, 4.300*4 |
| LSD type | | | - | Torque sensing + VCU | Torque sensing |
| Differential gear type (Type × number of gears) | | Side gear | Straight bevel gear × 2 | Helical gear × 2 | Helical gear × 2 |
| | | Pinion gear | Straight bevel gear × 2 | Long pinion × 4, Short pinion × 4 | Long pinion × 4, Short pinion × 4 |
| Number of teeth | Drive gear | | 49*1, 47*2, 41*3, 43*4 | 49*1, 47*2, 41*3, 43*4 | 49*1, 47*2, 41*3, 43*4 |
| | Drive pinion | | 10*1, *3, *4, 12*2 | 10*1, *3, *4, 12*2 | 10*1, *3, *4, 12*2 |
| | Side gear | | 18 | 22 | 22 |
| | Pinion gear | | 10 | 7 | 7 |
| Bearings (Outside diameter × Inside diameter) mm | | Side | 90.0 × 55.0 | 90.0 × 55.0 | 90.0 × 55.0 |
| | | Front | 68.3 × 30.2 | 68.3 × 30.2 | 68.3 × 30.2 |
| | | Rear | 79.4 × 36.5 | 79.4 × 36.5 | 79.4 × 36.5 |

NOTE
*1: 4D56
*2: 4M41-A/T
*3: 4M41-M/T
*4: 6G74 GDI

Purchased from www.WorkshopManuals.co.uk

www.WorkshopManuals.co.uk

## CONSTRUCTION DIAGRAM

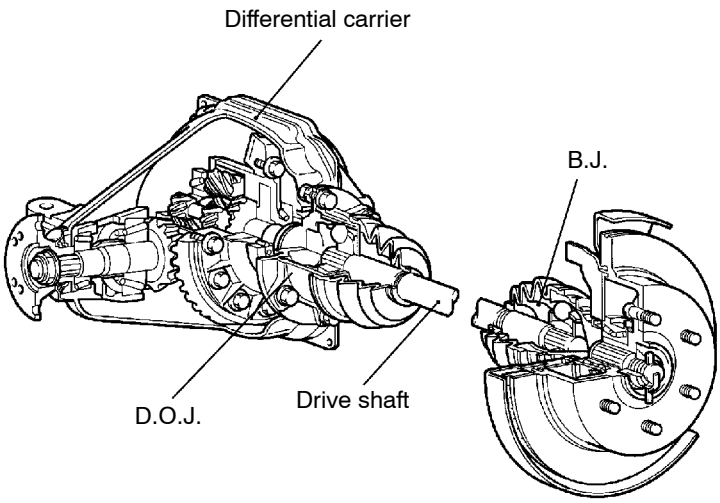


AX0262CA

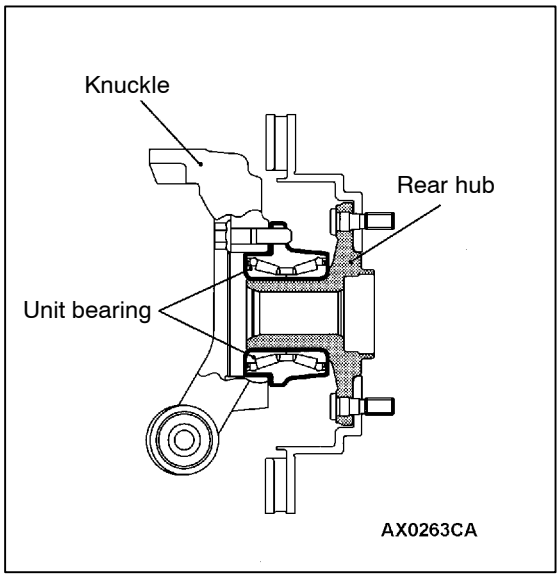


AX0263CA

# SERVICE SPECIFICATIONS

| Item | | | Standard value | Limit |
|---|---|---|---|---|
| Rear axle total backlash mm | | | - | 5 |
| Wheel bearing rotation starting torque N·m | | | - | 1.76 |
| Wheel bearing axial play mm | | | - | 0 |
| DOJ boot assembly dimension mm | | Vehicles without 4M4-M/T | 110 ± 3 | - |
| | | Vehicles with 4M4-M/T | 115 ± 3 | - |
| Rear differential lock air pump pressure kPa | | | 25 – 40 | - |
| Drive gear backlash mm | | | 0.13 – 0.18 | - |
| Drive gear runout mm | | | - | 0.05 |
| Differential gear backlash mm | | | 0 – 0.076 | 0.2 |
| Drive pinion turning torque N·m | Without oil seal | | 1.94 – 2.25 | - |
| | With oil seal | Companion flange (oil seal contacting area) with anti-rust agent | 2.03 – 2.34 | - |
| | | Companion flange (oil seal contacting area) with gear oil applied | 2.10 – 2.40 | - |

Purchased from www.WorkshopManuals.co.uk

www.WorkshopManuals.co.uk

## LUBRICANTS

| Item | Specified lubricants | Quantity |
|---|---|---|
| Rear differential gear oil | Hypoid gear oil<br>API classification GL-5 or higher SAE viscosity No. 90, 80 W | Approx. 1.6 L |
| B.J. joint | Repair kit grease | 245 ± 10 g |
| D.O.J. joint | Repair kit grease | 295 ± 10 g |

## SEALANTS

| Items | Specified sealants | Remarks |
|---|---|---|
| Differential cover | 3M ATD Part No. 8661 or equivalent | Semi-drying sealant |
| Drive gear and differential case mounting part | 3M Stud Locking 4170 or equivalent | Anaerobic sealant |

Purchased from www.WorkshopManuals.co.uk

www.WorkshopManuals.co.uk

# SPECIAL TOOLS

| Tool | Number | Name | Use |
|---|---|---|---|
| 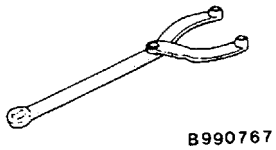 B990767 | MB990767 | Front hub and flange yoke holder | Removal, installation of the drive shaft nut |
| 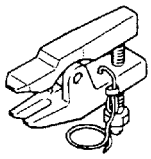 B991113 | MB991113 or MB990635 | Steering linkage puller | Disconnection of ball joint |
| 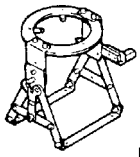 B990909 | MB990909 | Working base | Supporting of the differential carrier |
| B990810 | MB990810 | Side bearing puller | • Removal of the side bearing inner race<br>• Removal of the companion flange |
| 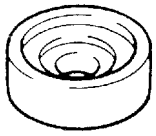 | MB991407 | Differential rear support arbor | Removal of the side bearing inner race |
| 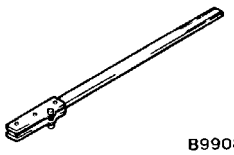 B990850 | MB990850 | End yoke holder | • Removal of the self-locking nut<br>• Adjustment of the drive pinion turning torque |
| 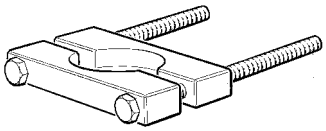 | MD998801 | Bearing remover | Removal of the drive pinion rear bearing inner race |
| 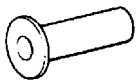 | MB991168 | Differential oil seal installer | Installation of drive pinion oil seal |
| 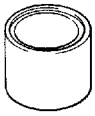 MB991445 | MB991445 | Bush remover and installer base | Installation of drive pinion rear bearing outer race |

Purchased from www.WorkshopManuals.co.uk

www.WorkshopManuals.co.uk

| Tool | Number | Name | Use |
|---|---|---|---|
| 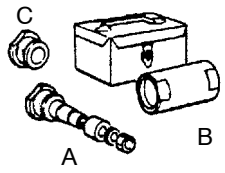 | MB991171<br>A: MB990819<br>B: MB991170<br>C: MB991169 | Pinion height gauge set<br>A: Drive pinion gauge<br>B: Cylinder gauge<br>C: Drive pinion gauge attachment | Measurement of the pinion height |
| 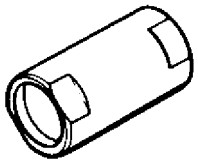 | MB991534 | Cylinder gauge | |
| 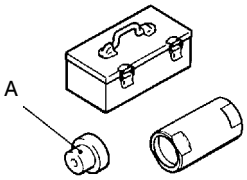 | MB991768<br>A: MB991770 | Drive pinion gauge set<br>A: Head | |
| 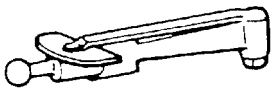 | MB990685 | Torque wrench | Measurement of the starting torque of ball bearing |
| 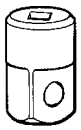 | MB990326 | Preload socket | |
| 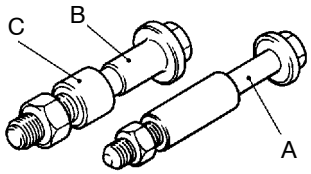 | A: MB991017<br>B: MB990998<br>C: MB991000 | A, B: Front hub remover and installer<br>C: Spacer | • Measure at the wheel bearing rotation starting torque<br>• Wheel bearing backlash check |
| | MB990802 | Bearing installer | Press-fitting of the drive pinion rear bearing inner race |
| 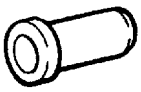 | MB990727 | Drive pinion oil seal installer | Press-fitting of the drive pinion oil seal |

Purchased from www.WorkshopManuals.co.uk

www.WorkshopManuals.co.uk

| Tool | Number | Name | Use |
|---|---|---|---|
| 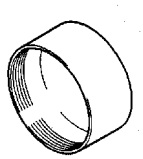 | MD998812 | Installer cap | Press-fitting of the side bearing inner race |
| | MD998829 | Installer adaptor | |
| 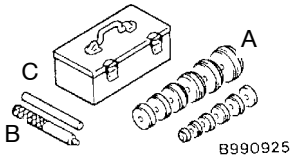 | MB990925<br>A: MB990926-MB990937<br>B: MB990938<br>C: MB990939 | Bearing and oil seal installer set<br>A: Installer adaptor<br>B: Bar<br>C: Brass bar | ● Press-fitting of oil seal<br>● Inspection of drive gear tooth contact<br>● Removal of bearing outer race<br>For details of each installer, refer to GROUP 26 - Special Tools. |

Purchased from www.WorkshopManuals.co.uk

www.WorkshopManuals.co.uk

# ON-VEHICLE SERVICE

## REAR AXLE TOTAL BACKLASH CHECK

1. Park the vehicle on a flat, level surface.
2. Move the transmission control lever to the neutral position. Move the transfer control lever to the neutral position. Apply the parking brake. Raise the vehicle on a jack.

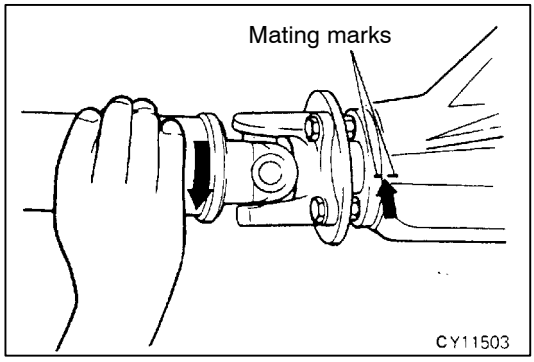


3. Turn the companion flange clockwise as far as it will go. Make the mating mark on the dust cover of the companion flange and on the differential carrier.
4. Turn the companion flange anti-clockwise as far as it will go, and measure the amount of distance the mating marks moved.

   **Limit: 5 mm**

5. If the backlash exceeds the limit value, remove the differential carrier assembly and check the following.
   - Final drive gear backlash (Refer to P.27-37.)
   - Differential gear backlash (Refer to P.27-36.)

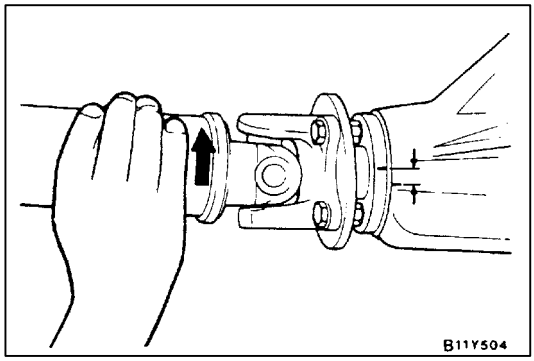


## GEAR OIL LEVEL CHECK

Check that gear oil level is not 5 mm below the bottom of filler plug hole.

**Specified gear oil:**

**Hypoid gear oil API classification GL-5 or higher SAE viscosity Number 90, 80W**

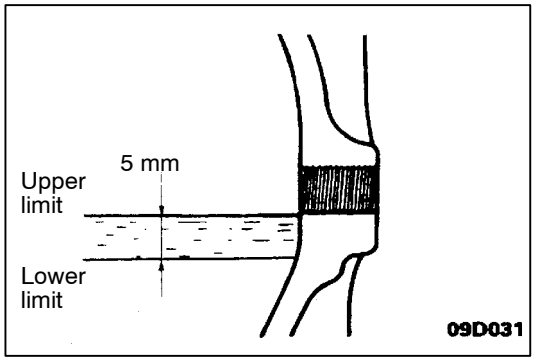


## WHEEL BEARING AXIAL PLAY CHECK

1. Remove the rear brake assembly and remove the brake disc while holding it with wires to prevent it from falling.
2. Fit the dial gauge as shown in the diagram and move hub in the axial direction to measure the play.

   **Limit: 0 mm**

3. If the play exceeds the limit, replace the rear hub assembly.

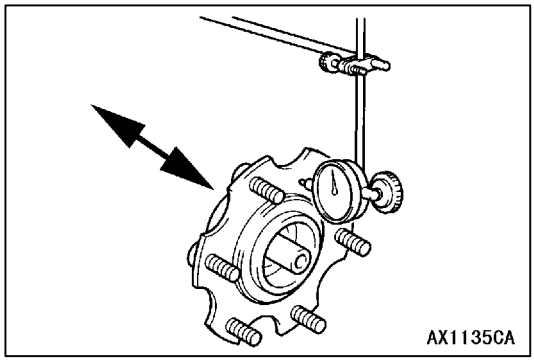


Purchased from www.WorkshopManuals.co.uk

www.WorkshopManuals.co.uk

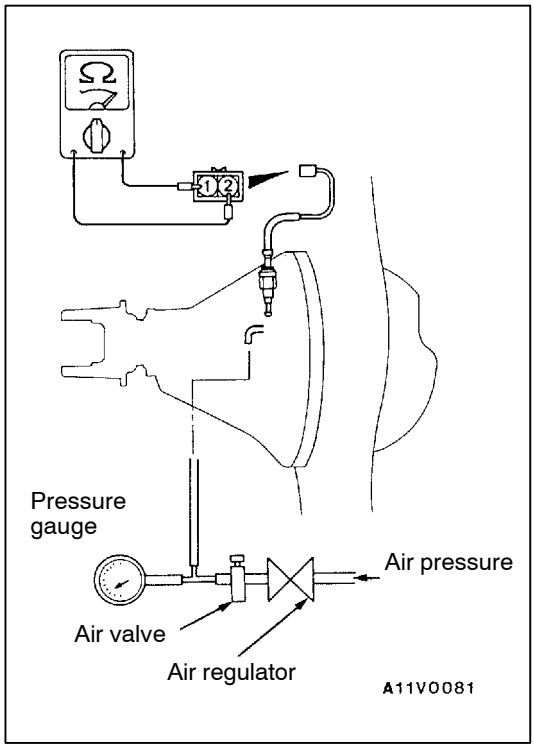


## REAR DIFFERENTIAL LOCK DETECTION SWITCH CHECK

1. Raise up the vehicle.
2. Remove the air pipe and air hose connections.
3. Connect a pressure gauge and air regulator, for adjusting the compressed air pressure, to the air hose.
4. Adjust the compressed air pressure with the air regulator until the pressure gage shows a pressure of approximately 25 kPa.

   **Caution**
   **Do not apply a higher pressure.**

5. Hold the wheel on one side of the vehicle stationary, and slowly turn the wheel on the other side.
6. Check for continuity in the rear differential lock detection switch.

| | |
|---|---|
| When air is supplied | Continuity |
| When air is released | No continuity |

7. If the detection switch is defective, first remove the differential carrier, then remove the detection switch.

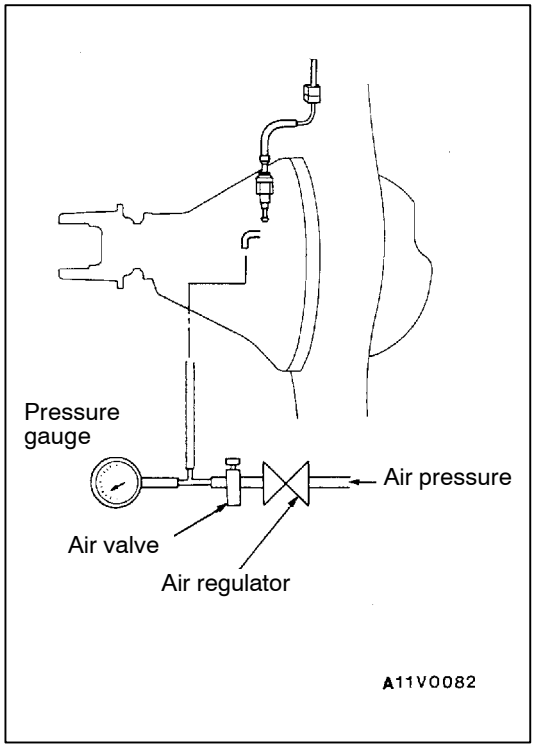


## REAR DIFFERENTIAL LOCK SYSTEM AIR LEAKAGE CHECK

1. Remove the rear differential lock air pump and remove the air hose from the air pump. (Refer to P.27-20.)
2. Connect a pressure gage and air regulator, for adjusting the compressed air pressure to the air hose.
3. Adjust the compressed air pressure with the air regulator until the pressure gage shows a pressure of approximately 35 kPa.

   **Caution**
   **Do not apply a higher pressure.**

4. Shut off the air valve.
5. If after approximately 10 minutes have passed, the pressure has dropped, it can be concluded that there is no leaking of air from the air hose, etc.

Purchased from www.WorkshopManuals.co.uk

www.WorkshopManuals.co.uk

# REAR HUB ASSEMBLY

## REMOVAL AND INSTALLATION

**Post-installation Operation**
Parking Brake Lever Stroke Adjustment (Refer to GROUP 36 – On-vehicle Service.)

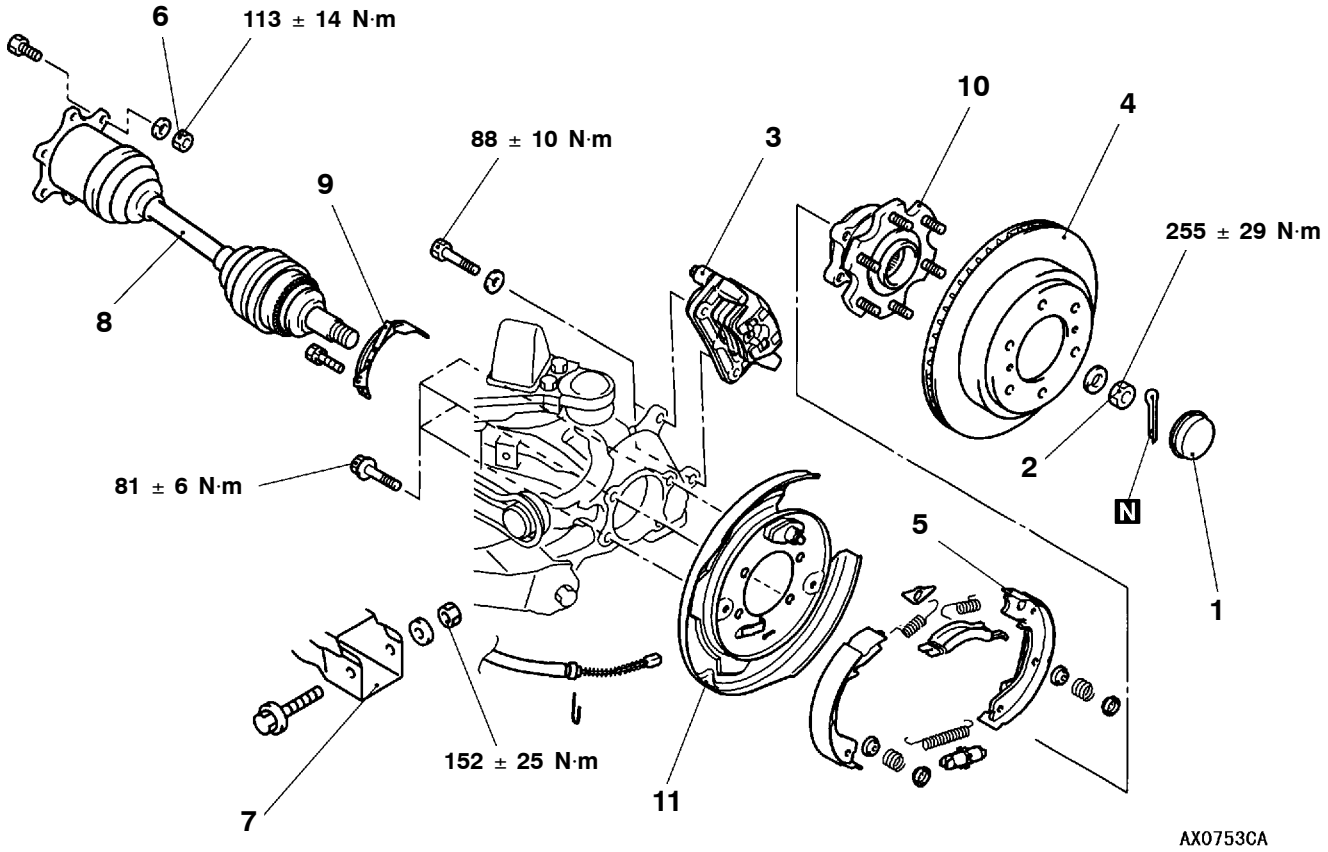


**Removal steps**

1. Hub cap
◀A▶ ▶B◀ 2. Drive shaft nut
◀B▶ 3. Rear brake caliper
4. Rear brake disc
5. Parking brake shoe & lining assembly (Refer to GROUP 36 - Parking Brake Drum.)
6. Companion shaft and drive shaft connection
◀C▶ ▶A◀ 7. Lower arm and knuckle connection
8. Rear drive shaft assembly
9. ABS rotor protector
10. Rear hub assembly
11. Backing plate

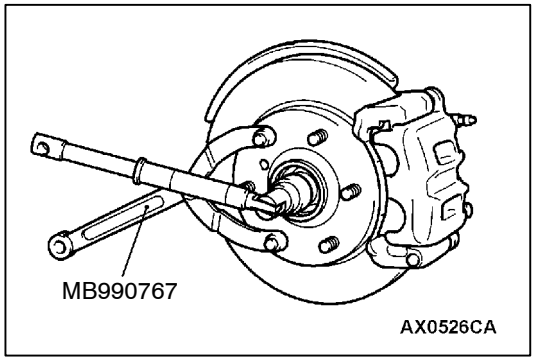


## REMOVAL SERVICE POINTS

### ◀A▶ DRIVE SHAFT NUT REMOVAL

**Caution**
**Do not apply pressure to wheel bearing by the vehicle weight to avoid possible damage to wheel bearing before tightening drive shaft nut fully.**

Purchased from www.WorkshopManuals.co.uk

www.WorkshopManuals.co.uk

### ◀B▶ REAR BRAKE CALIPER REMOVAL

Suspend the rear brake caliper from the body with wire, etc. to prevent it from falling.

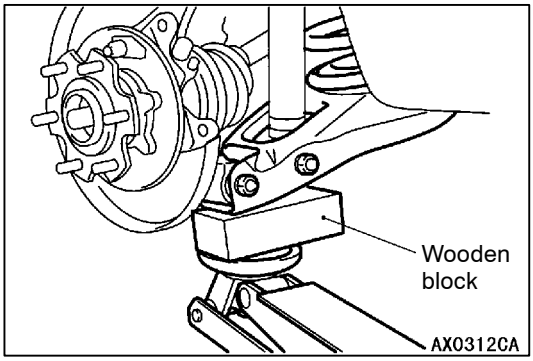


### ◀C▶ LOWER ARM AND KNUCKLE DISCONNECTION

Attach wooden block to the lower arm as shown in the illustration and use the floor jack to remove the lower arm mounting bolt by compressing the coil spring.

## INSTALLATION SERVICE POINTS

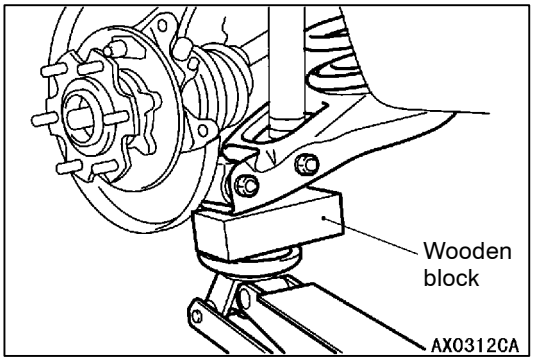


### ▶A◀ LOWER ARM AND KNUCKLE CONNECTION

Attach wooden block to the lower arm as shown in the illustration and use the floor jack to install the lower arm mounting bolt by compressing the coil spring.

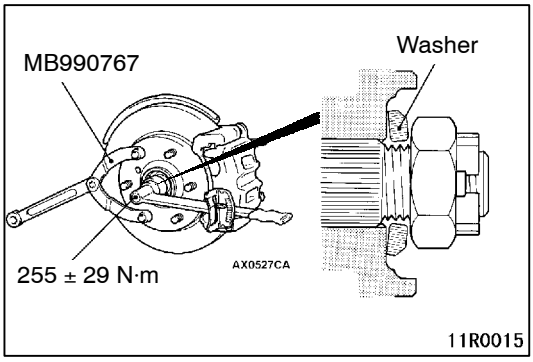


### ▶B◀ DRIVE SHAFT NUT INSTALLATION

1. Assemble the drive shaft washer in the illustrated direction.
2. Tighten the drive shaft nut fully with special tools.

   **Caution**
   **Do not apply pressure to wheel bearing by the vehicle weight to avoid possible damage to wheel bearing before tightening drive shaft nut fully.**

3. If the pin hole does not align with another, tighten the drive shaft nut (less than 284 N·m) and find the nearest hole then bend the split pin to fit in.

Purchased from www.WorkshopManuals.co.uk

www.WorkshopManuals.co.uk

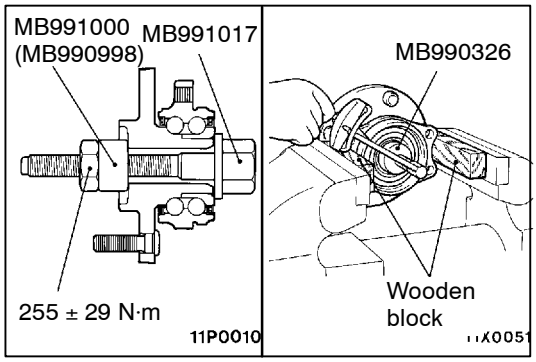


## INSPECTION

### WHEEL BEARING ROTATION STARTING TORQUE CHECK

1. Tighten special tools in rear hub assembly to the specified torque.
2. Hold rear hub assembly in a vice by way of wooden block.
3. Measure the wheel bearing rotation torque with special tools.

   **Limit: 1.76 N·m**

4. Hub rotation starting torque must be under the limit value and there should be no stickiness or roughness when rotating the hub.

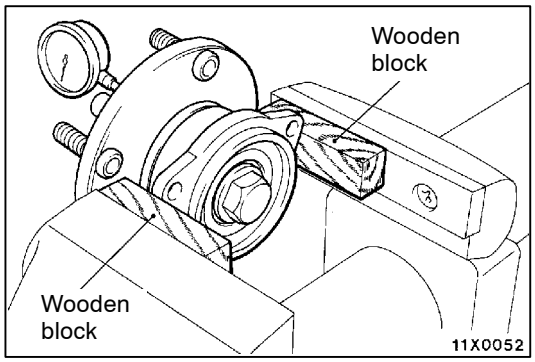


### WHEEL BEARING AXIAL PLAY CHECK

1. Check the wheel bearing axial play.

   **Limit: 0 mm**

2. If the wheel bearing axial play exceeds the limit value at the specified torque of (255 ± 29 N·m), replace the rear hub assembly.

Purchased from www.WorkshopManuals.co.uk

www.WorkshopManuals.co.uk

# KNUCKLE

## REMOVAL AND INSTALLATION

**Pre-removal Operation**
Rear Hub Assembly Removal (Refer to P.27-10.)

**Post-installation Operation**
- Press dust cover with a finger to check for crack or damage in the dust cover.
- Rear Hub Assembly Installation (Refer to P.27-10.)

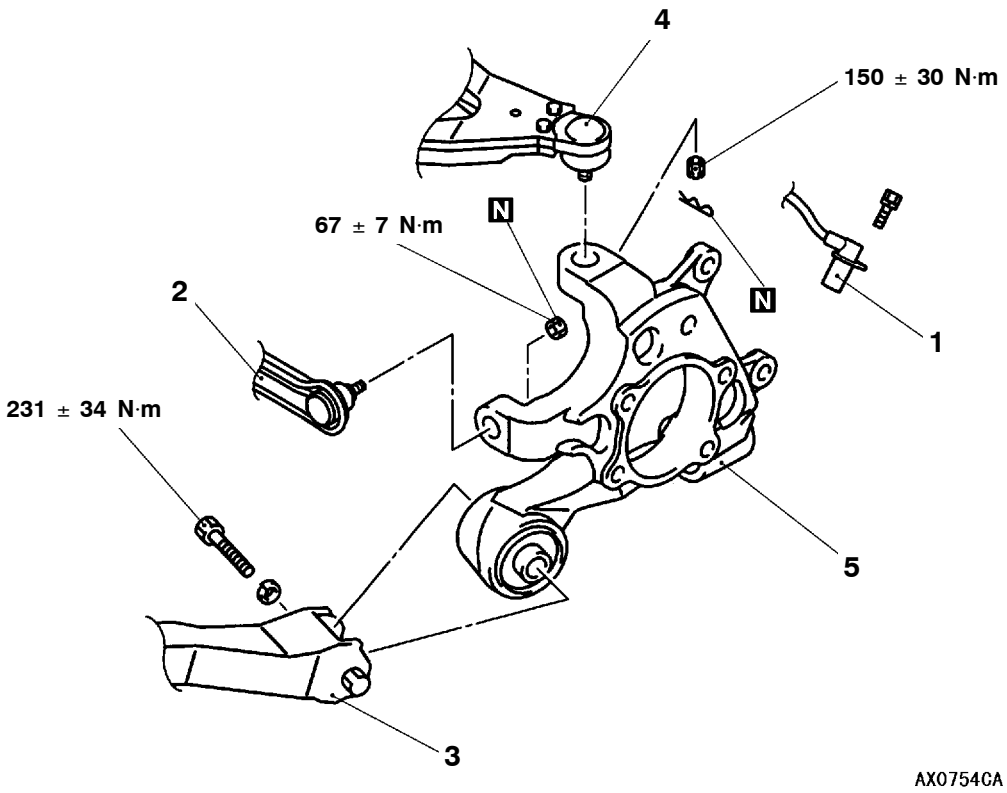


**Removal steps**

1. Vehicle speed sensor
2. Knuckle and toe-control arm connection

◀A▶

◀A▶

3. Knuckle and trailing arm connection
4. Knuckle and upper arm connection
5. Knuckle assembly

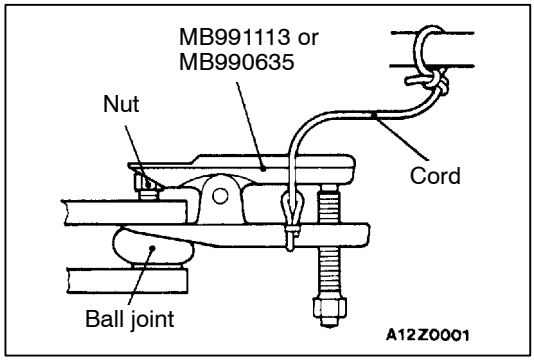


## REMOVAL SERVICE POINT

### ◀A▶ KNUCKLE AND CONTROL ARM/UPPER ARM DISCONNECTION

**Caution**

1. **Use special tools to loosen the nut from the ball joint instead of removing it.**
2. **Hang special tools with ropes to prevent them from falling.**

Purchased from www.WorkshopManuals.co.uk

www.WorkshopManuals.co.uk

# DRIVE SHAFT

## REMOVAL AND INSTALLATION

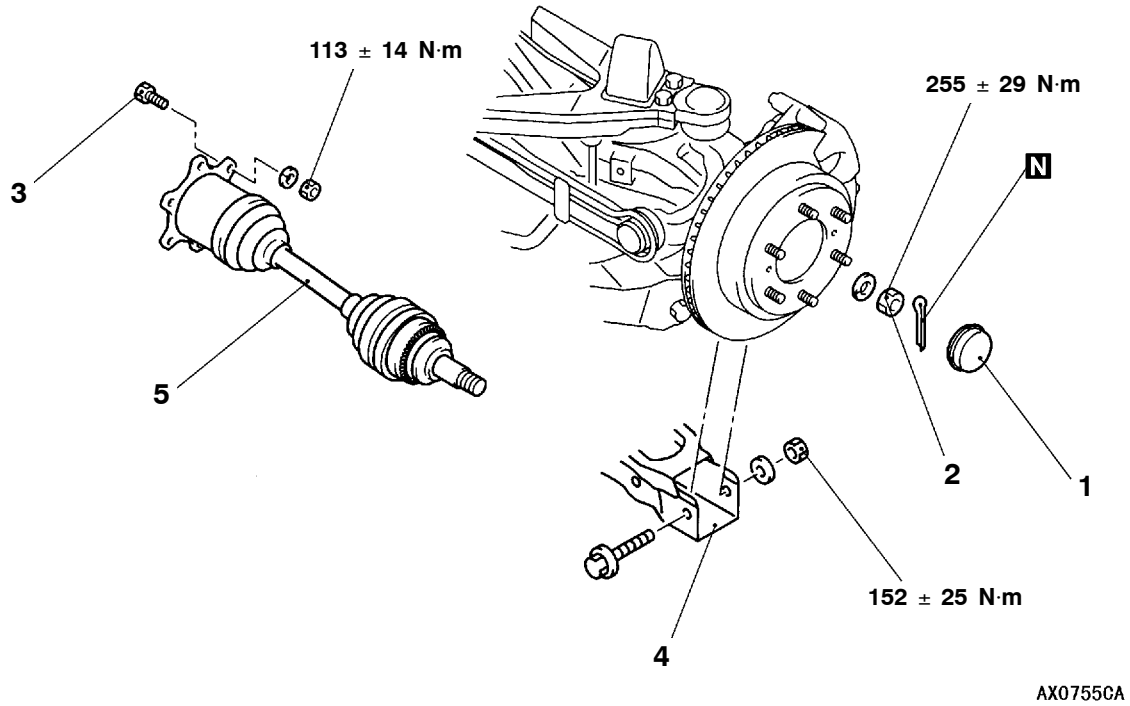


**Removal steps**

◀A▶ ▶B◀
1. Cap
2. Drive shaft nut
3. Companion shaft and drive shaft connection

◀B▶ ▶A◀
4. Knuckle and lower arm connection
5. Rear drive shaft assembly

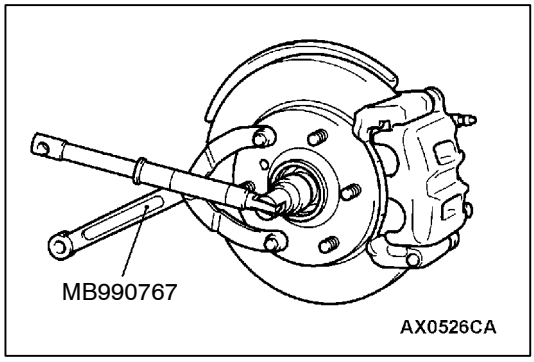


## REMOVAL SERVICE POINTS

### ◀A▶ DRIVE SHAFT NUT REMOVAL

**Caution**
**Do not apply pressure to wheel bearing by the vehicle weight to avoid possible damage to wheel bearing before tightening drive shaft nut fully.**

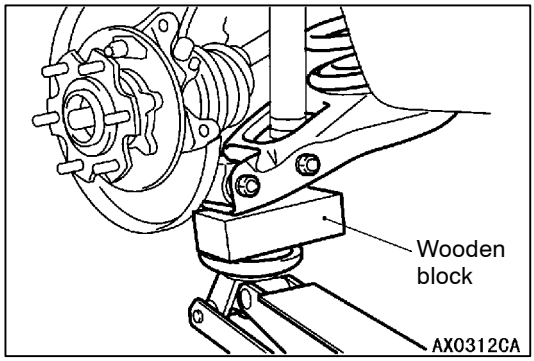


### ◀B▶ LOWER ARM AND KNUCKLE DISCONNECTION

Attach wooden block to the lower arm as shown in the illustration and use the floor jack to remove the lower arm mounting bolt by compressing the coil spring.

Purchased from www.WorkshopManuals.co.uk

www.WorkshopManuals.co.uk

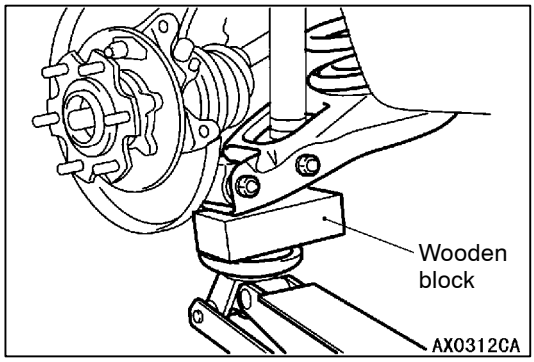


## INSTALLATION SERVICE POINTS

### ▶A◀ LOWER ARM AND KNUCKLE CONNECTION

Attach wooden block to the lower arm as shown in the illustration and use the floor jack to install the lower arm mounting bolt by compressing the coil spring.

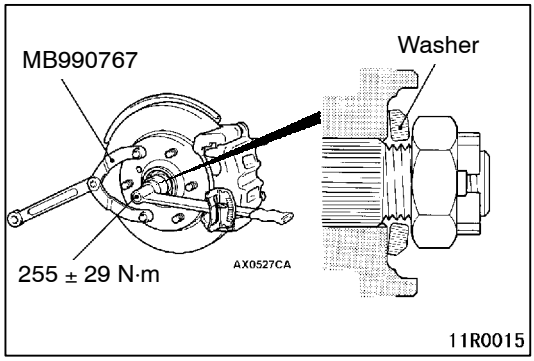


### ▶B◀ DRIVE SHAFT NUT INSTALLATION

1. Assemble the drive shaft washer in the illustrated direction.
2. Tighten the drive shaft nut fully with special tools.

   **Caution**
   **Do not apply pressure to wheel bearing by the vehicle weight to avoid possible damage to wheel bearing before tightening drive shaft nut fully.**

3. If the pin hole does not align with another, tighten the drive shaft nut (less than 284 N·m) and find the nearest hole then bend the split pin to fit in.

Purchased from www.WorkshopManuals.co.uk

www.WorkshopManuals.co.uk

## DISASSEMBLY AND REASSEMBLY

**Caution**
**Never disassemble the B.J. assembly except when replacing the B.J. boot.**

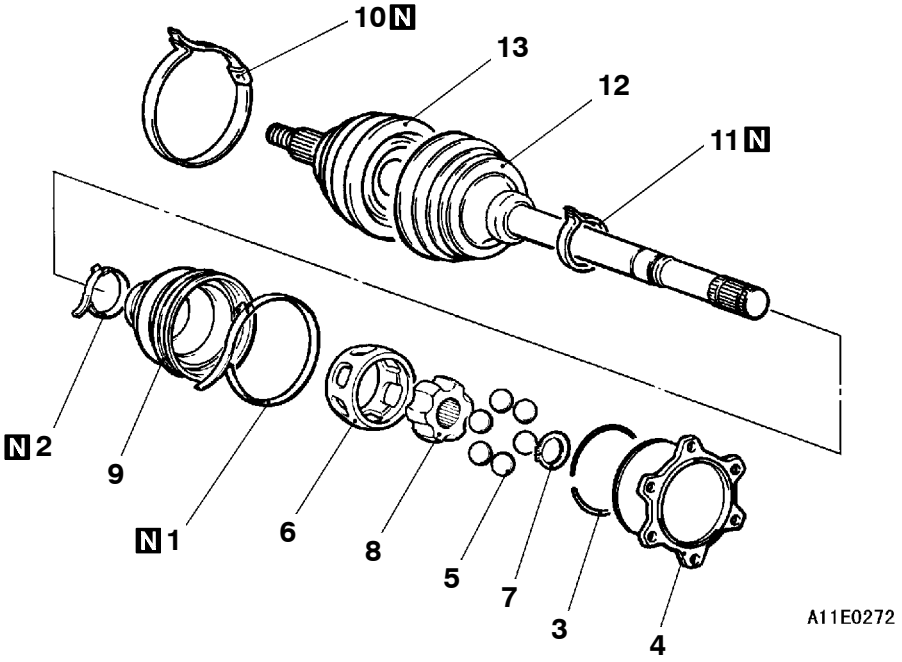


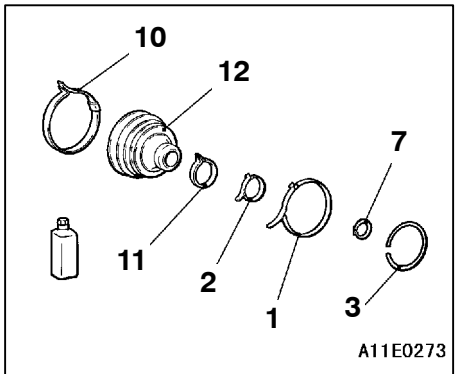


B.J. boot repair kit

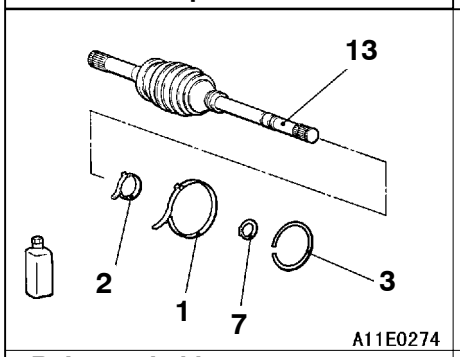


B.J. repair kit

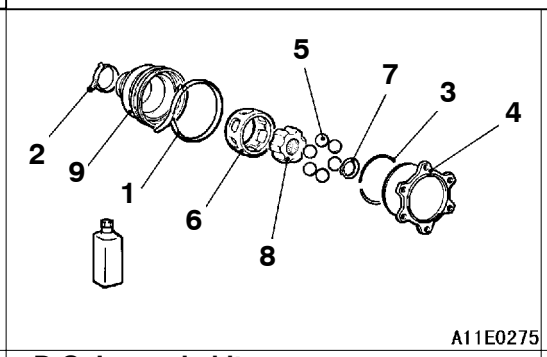


D.O.J. repair kit

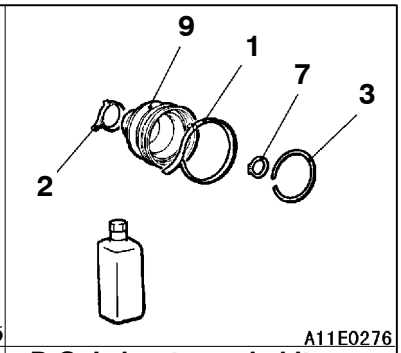


D.O.J. boot repair kit

| | Disassembly steps | | Reassembly steps |
|---|---|---|---|
| | 1. D.O.J. boot band (large) | | 13. B.J. assembly |
| | 2. D.O.J. boot band (small) | ▶A◀ | 12. B.J. boot |
| | 3. Circlip | | 11. B.J. boot band (small) |
| | 4. D.O.J. outer race | | 10. B.J. boot band (large) |
| ◀A▶ | 5. Balls | ▶A◀ | 9. D.O.J. boot |
| ◀B▶ | 6. D.O.J. cage | ▶B◀ | 6. D.O.J. cage |
| | 7. Snap ring | ▶B◀ | 8. D.O.J. inner race |
| | 8. D.O.J. inner race | | 7. Snap ring |
| ◀C▶ | 9. D.O.J. boot | | 5. Balls |
| | 10. B.J. boot band (large) | ▶C◀ | 4. D.O.J. outer race |
| | 11. B.J. boot band (small) | | 3. Circlip |
| ◀C▶ | 12. B.J. boot | ▶D◀ | 2. D.O.J. boot band (small) |
| | 13. B.J. assembly | ▶D◀ | 1. D.O.J. boot band (large) |

Purchased from www.WorkshopManuals.co.uk

www.WorkshopManuals.co.uk

## Lubrication Points

**Caution**
**Do not mix old and new or different types of grease, as a special grease is used in the joint.**

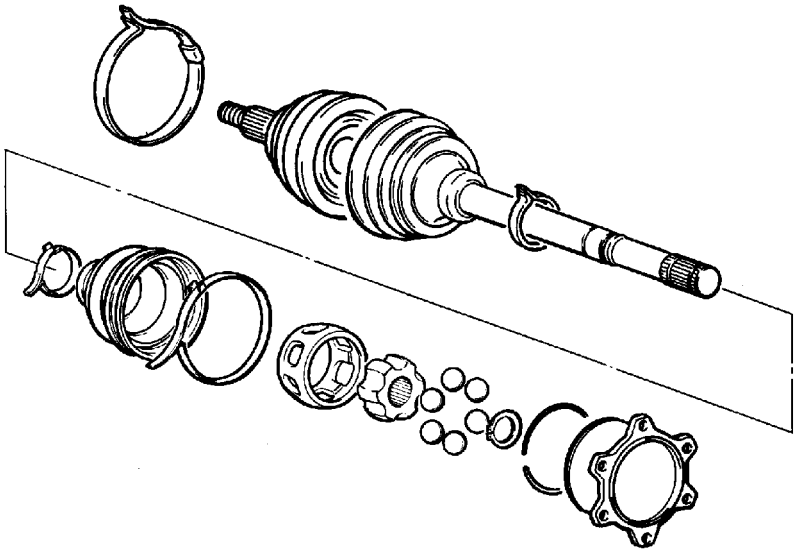

11E0272

| | | |
|---|---|---|
| 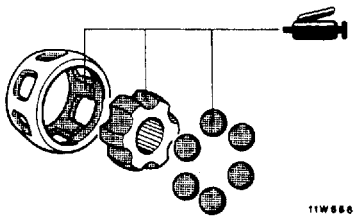 11W066 | D.O.J. 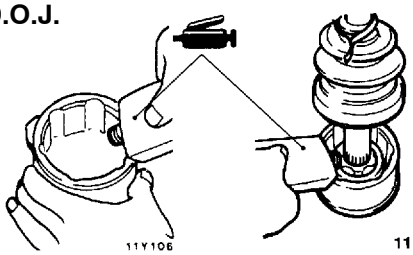 11Y106 11H0067 | B.J. 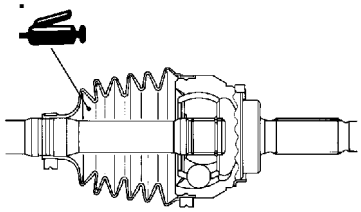 A11X0142 |
| **Grease: Repair kit grease** | **Grease: Repair kit grease**<br>**<B.J.>245 ± 10 g (135 ± 5 g inside joint, 110 ± 5 g inside boot)**<br>**<D.O.J.>295 ± 10 g (185 ± 5 g inside joint, 110 ± 5 g inside boot)**<br>Note<br>The grease in the repair kit should be divided in half for use, respectively, at the joint and inside the boot. | |

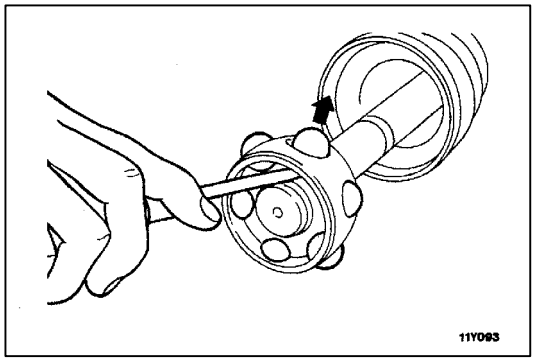

11Y093

## DISASSEMBLY SERVICE POINTS

### ◀A▶ BALLS REMOVAL

Purchased from www.WorkshopManuals.co.uk

www.WorkshopManuals.co.uk

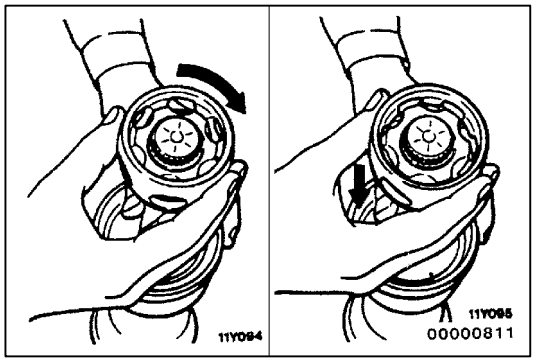


### ◀B▶ D.O.J. CAGE REMOVAL

Remove the D.O.J. cage from the D.O.J. inner race in the direction of the B.J.

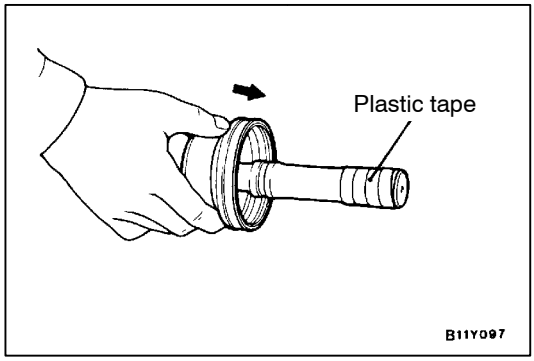


### ◀C▶ D.O.J. BOOT/B.J. BOOT REMOVAL

Wrap plastic tape around the spline part on the D.O.J. side of the drive shaft so that D.O.J. boot/B.J. boot are not damaged when they are removed.

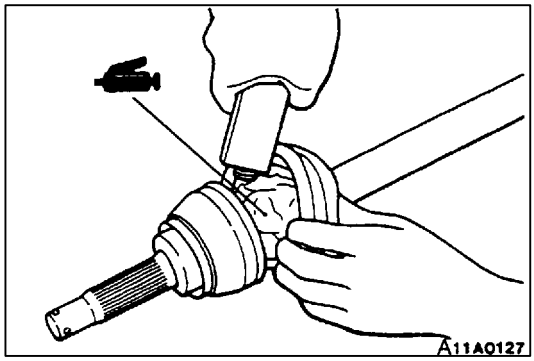


## REASSEMBLY SERVICE POINTS

### ▶A◀ B.J. BOOT/D.O.J. BOOT INSTALLATION

1. Wrap the tape around the spline of the shaft, then install B.J. boot and D.O.J. boot in order.
2. Fill the inside of B.J. and B.J. boot with specified grease.

   **Specified grease: Repair kit grease**

   **Used amount: 245 ± 10 g**
   **(135 ± 5 g inside joint, 110 ± 5 g inside boot)**

   **Caution**
   **Do not mix old and new or different types of grease, as a special grease is used in the joint.**
3. Tighten the boot band.

   **Caution**
   **In order to fill the specified amount of air inside the BJ boot, keep the bent angle of the drive shaft to 0° during the operation.**

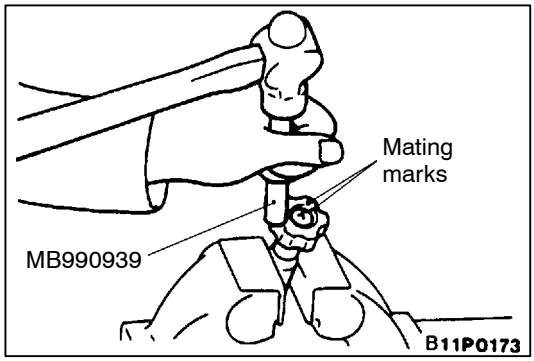


### ▶B◀ D.O.J. CAGE/D.O.J. INNER RACE INSTALLATION

1. Install D.O.J. cage to the drive shaft and put it aside to B.J. assembly side.
2. Align the mating mark of D.O.J. inner race with that of the shaft.
3. Tap the inner race with even force to press-fit into the bump of the shaft with special tools.

Purchased from www.WorkshopManuals.co.uk

www.WorkshopManuals.co.uk

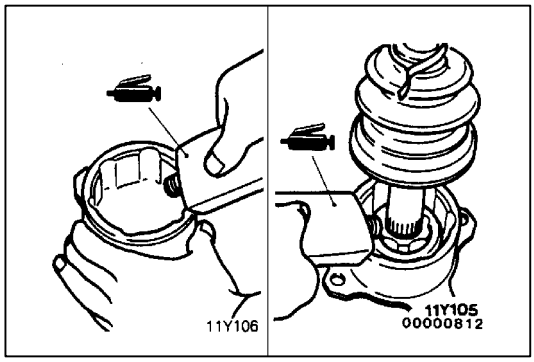


### ▶C◀ D.O.J. OUTER RACE INSTALLATION

Fill the inside of the D.O.J. outer race and D.O.J. boot with the specified grease.

**Specified grease:**

**Repair kit grease 295 ± 10 g (185 ± 5 g inside joint, 110 ± 5 g inside boot)**

**Caution**

**The drive shaft joint use special grease. Do not mix old and new or different types of grease.**

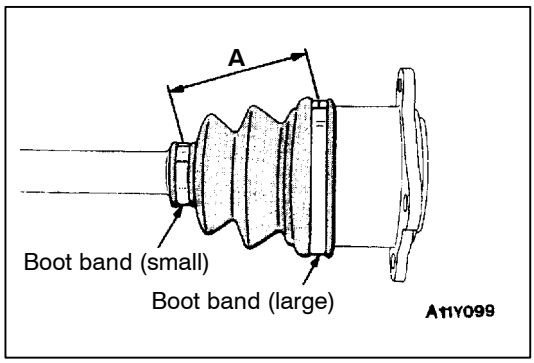


### ▶D◀ D.O.J. BOOT/D.O.J. BOOT BAND INSTALLATION

1. Position the D.O.J. outer race so that the distance between the boot bands is at the standard value.

   **Standard value (A): 110 ± 3 mm <4D5, 4M4-A/T, 6G7>**
   **115 ± 3 mm <4M4-M/T>**

2. Remove part of the D.O.J. boot from the D.O.J. outer race to release the air pressure inside the boot.

Purchased from www.WorkshopManuals.co.uk

www.WorkshopManuals.co.uk

# REAR DIFFERENTIAL LOCK

## REMOVAL AND INSTALLATION

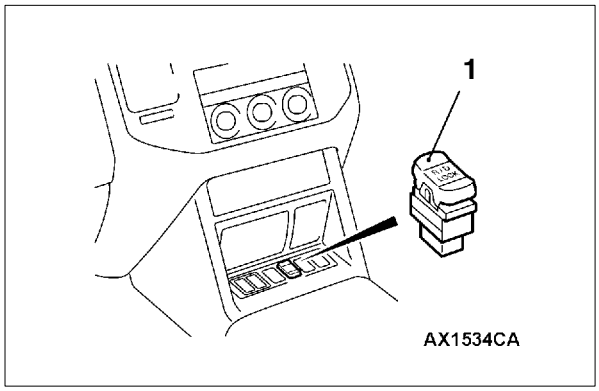


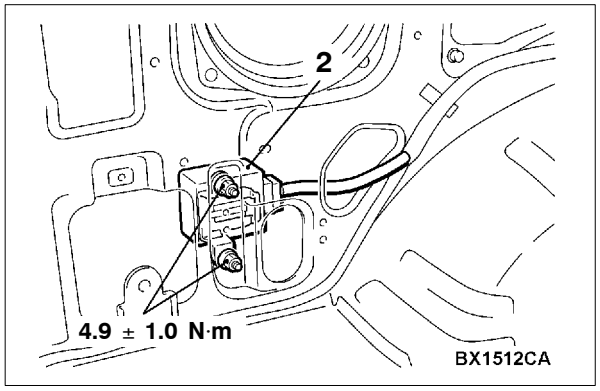


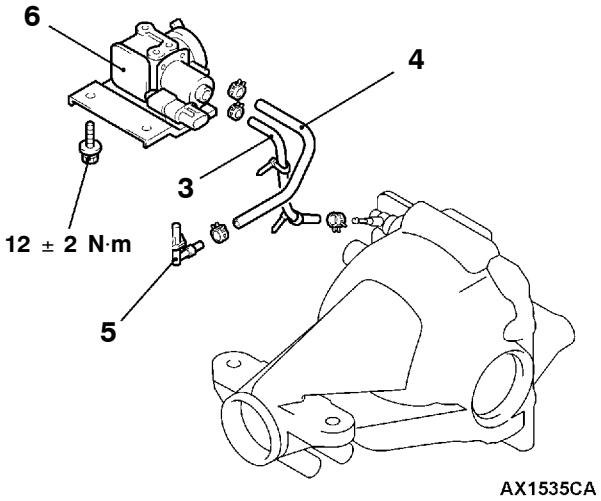


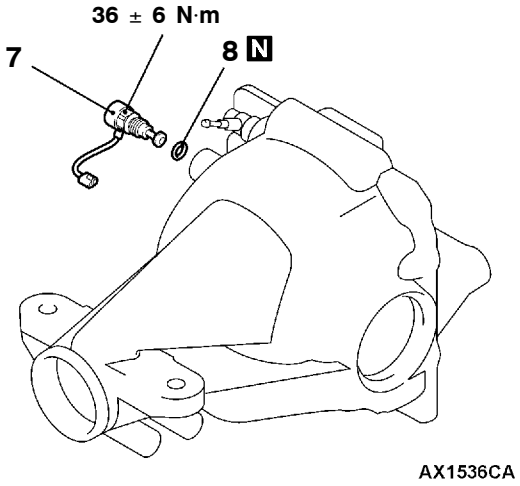


1. Rear differential lock switch

**Rear differential lock-ECU removal steps**

- Upper/Lower quarter trim (Refer to Group 52A – Trims.)

2. Rear differential lock-ECU

**Rear differential lock air pump assembly removal steps**

3. Hose
4. Vapor hose
5. Nipple
6. Rear differential lock air pump assembly

**Rear differential lock position switch removal steps**

- Differential carrier (Refer to P.27-23.)

7. Rear differential lock position switch
8. Gasket

Purchased from www.WorkshopManuals.co.uk

www.WorkshopManuals.co.uk

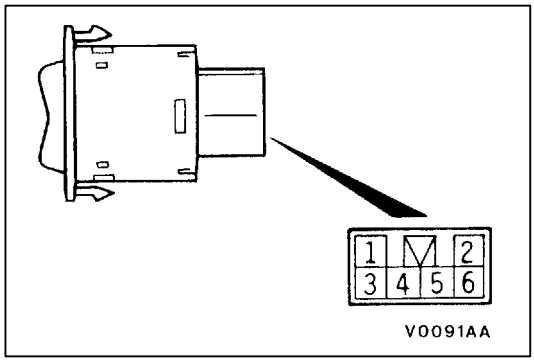


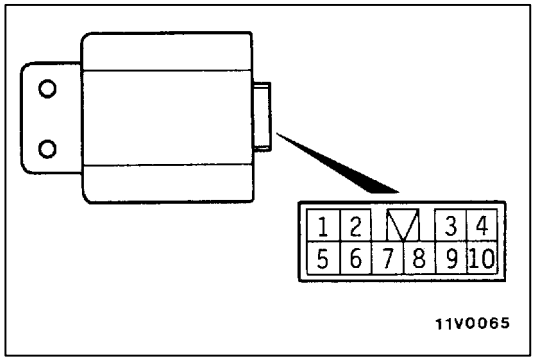


## INSPECTION

### REAR DIFFERENTIAL LOCK SWITCH CHECK

| Switch position | Terminal No. | | | | | |
|---|---|---|---|---|---|---|
| | 1 | ILL | 2 | 3 | 5 | 6 |
| OFF | ○ | ⊕ | ○ | ○ | | ○ |
| ON | ○ | ⊕ | ○ | | ○ | ○ |

### REAR DIFFERENTIAL LOCK-ECU CHECK

1. Measure the terminal voltage under each condition.
2. With the ECU connected to the harness and the probe inserted into rear of the harness connector, measure the voltage between terminal number 6 (earth terminal) and each terminal.

| Terminal No. | Inspection item | | Condition | | Terminal voltage |
|---|---|---|---|---|---|
| 1 | Rear differential lock switch | OFF side | Ignition switch: ON | When in neutral | System voltage |
| 2 | Vehicle speed reed switch | | Select “D” or “1” (1st gear) and drive forward slowly | | 5 V |
| 3 | Ignition switch (IG1) | | Ignition switch (IG1) | OFF | 0 V |
| | | | | ON | Approximately 12 V (battery positive voltage) |
| 4 | Rear differential lock air pump | | Ignition switch: ON | When filling or holding | System voltage |
| | | | | When releasing | 0 V |
| 5 | 4WD detection switch | | Ignition switch: ON | 4WD | 0 V |
| | | | | 2WD | System voltage |
| 8 | Rear differential lock detection switch | | Ignition switch: ON | Rear differential is locked | 0 V |
| | | | | Rear differential is free | System voltage |
| 9 | Rear differential lock switch | ON side | Ignition switch: ON | ON side or OFF side | 0 V |
| 10 | Rear differential lock indicator lamp | | Ignition switch: ON | Rear differential is locked | 0 V |
| | | | | Rear differential is free | System voltage |

Purchased from www.WorkshopManuals.co.uk

www.WorkshopManuals.co.uk

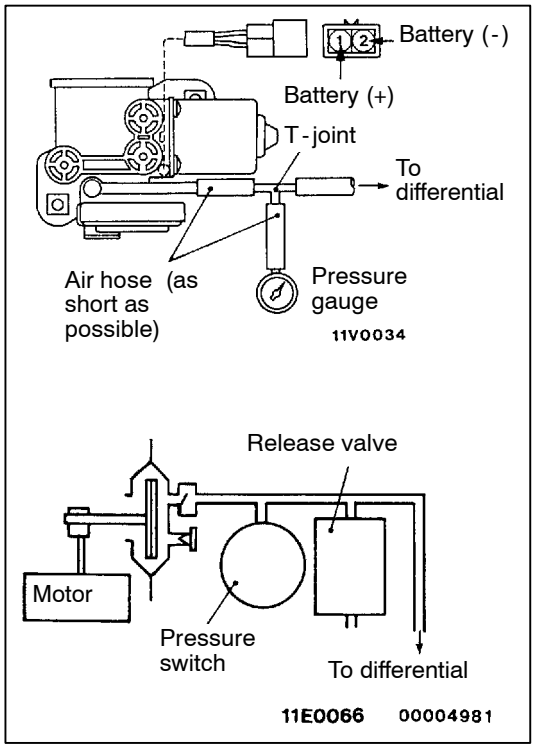


## REAR DIFFERENTIAL LOCK AIR PUMP CHECK

1. Install air hose to the differential.
2. Connect a pressure gauge to the air pump discharge outlet nozzle, via the air hose and T-joint.
3. Apply battery voltage to the air pump connector.
4. Measure the time when the pump starts and stops operating, and if stops within five seconds, the pressure switch inside the pump is normal.
5. Measure the pressure 10 - 20 seconds after the pump has stopped.

   **Standard value: 25 - 40 kPa**

   If the pressure is within the standard value, the release valve inside the pump is normal.
6. Check that the pump does not begin operating for five minutes after it has stopped.
7. If the inspection for 4 - 6 is normal, then the pump is fully operational.

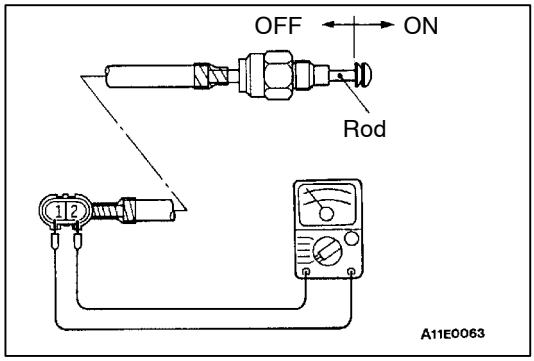


## REAR DIFFERENTIAL LOCK DETECTION SWITCH CHECK

1. Connect an ohmmeter to the detection switch connector.
2. The rear differential lock switch is in good condition when the rod of the detection switch is pulled, there should be continuity, and when it returned to its normal position, no continuity.

Purchased from www.WorkshopManuals.co.uk

www.WorkshopManuals.co.uk

# DIFFERENTIAL CARRIER

## REMOVAL AND INSTALLATION

**Caution**
**Since a carbon fiber fortified plastic tube is used in the rear propeller shaft, make sure to refer to GROUP 25 for removal procedure.**

**Pre-removal and Post-installation Operation**
Differential Gear Oil Draining and Refilling (Refer to P.27-8.)

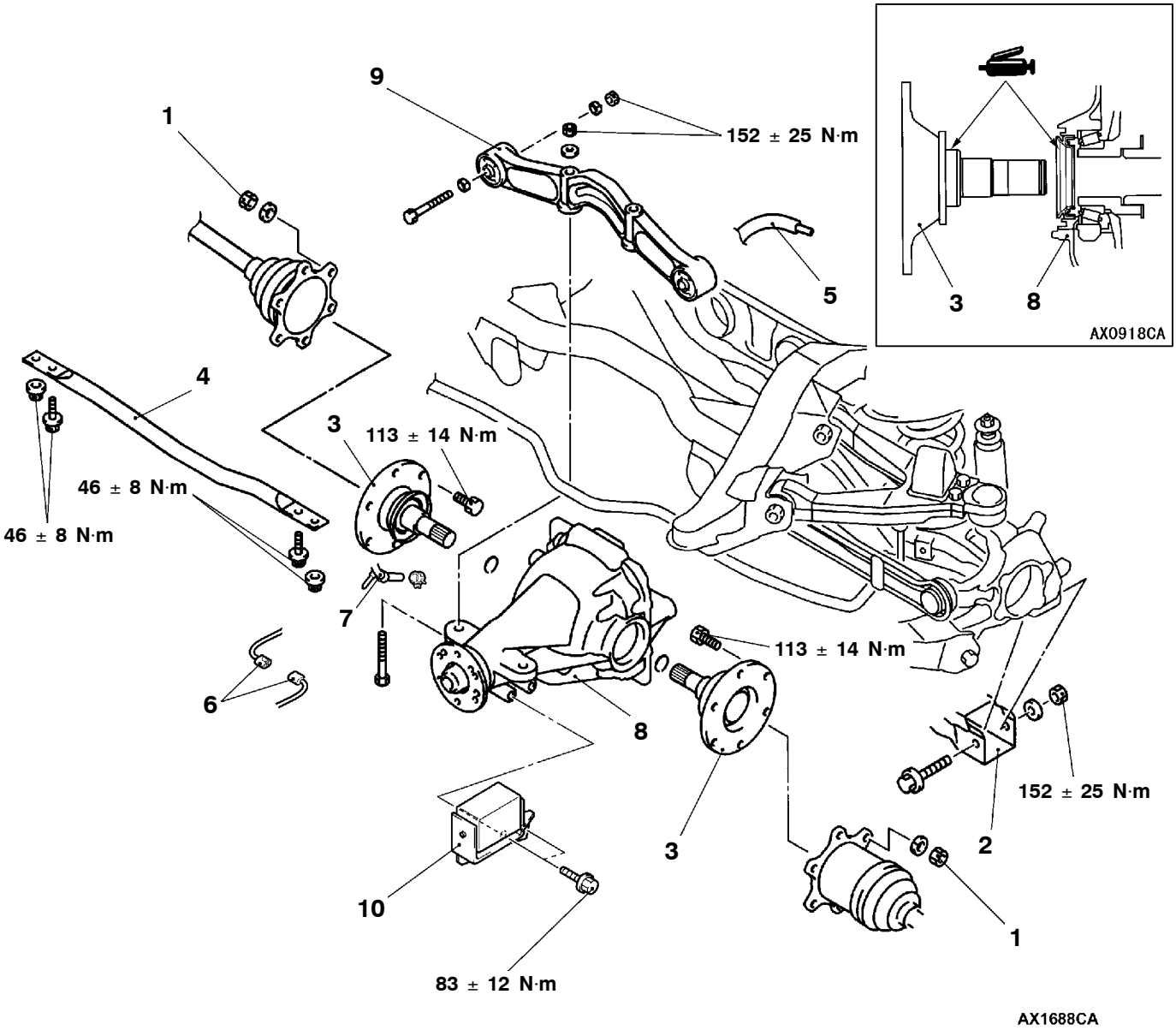


**Removal steps**

- Propeller shaft
  (Refer to GROUP 25.)

◀A▶ ▶A◀
1. Drive shaft connection
2. Knuckle and lower arm connection
3. Companion shaft
4. Toe control tower bar
5. Breather hose connection
6. Harness connection <Vehicles with rear differential lock>

◀B▶
7. Hose connection <Vehicles with rear differential lock>
8. Differential carrier assembly
- Fuel tank
  (Refer to GROUP 13B - Fuel Supply.)

9. Rear differential mount member
10. Dynamic damper

Purchased from www.WorkshopManuals.co.uk

www.WorkshopManuals.co.uk

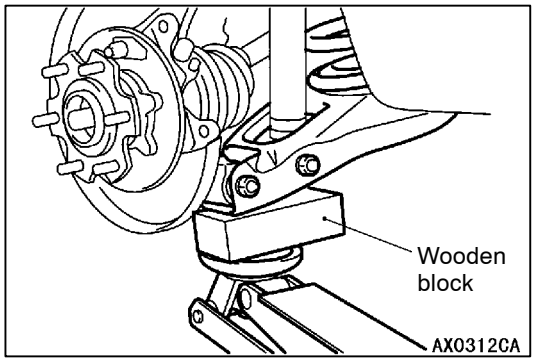


## REMOVAL SERVICE POINTS

### ◀A▶ KNUCKLE AND LOWER ARM DISCONNECTION

Attach wooden block to the lower arm as shown in the illustration and use the floor jack to remove the lower arm mounting bolt by compressing the coil spring.

### ◀B▶ DIFFERENTIAL CARRIER ASSEMBLY REMOVAL

Support the differential carrier lower part by jacking to remove the joint bolt and the differential carrier assembly.

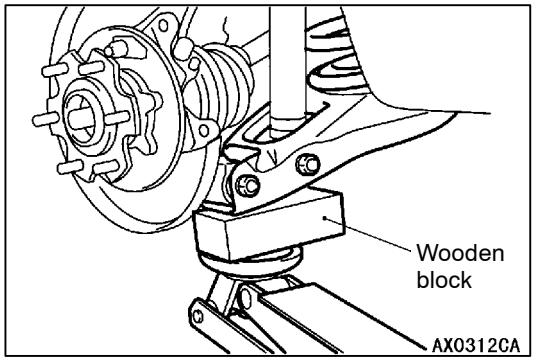


## INSTALLATION SERVICE POINT

### ▶A◀ KNUCKLE AND LOWER ARM CONNECTION

Attach wooden block to the lower arm as shown in the illustration and use the floor jack to install the lower arm mounting bolt by compressing the coil spring.

Purchased from www.WorkshopManuals.co.uk

www.WorkshopManuals.co.uk

## DISASSEMBLY

**Caution**

***: Do not disassemble the limited slip differential case assembly.**

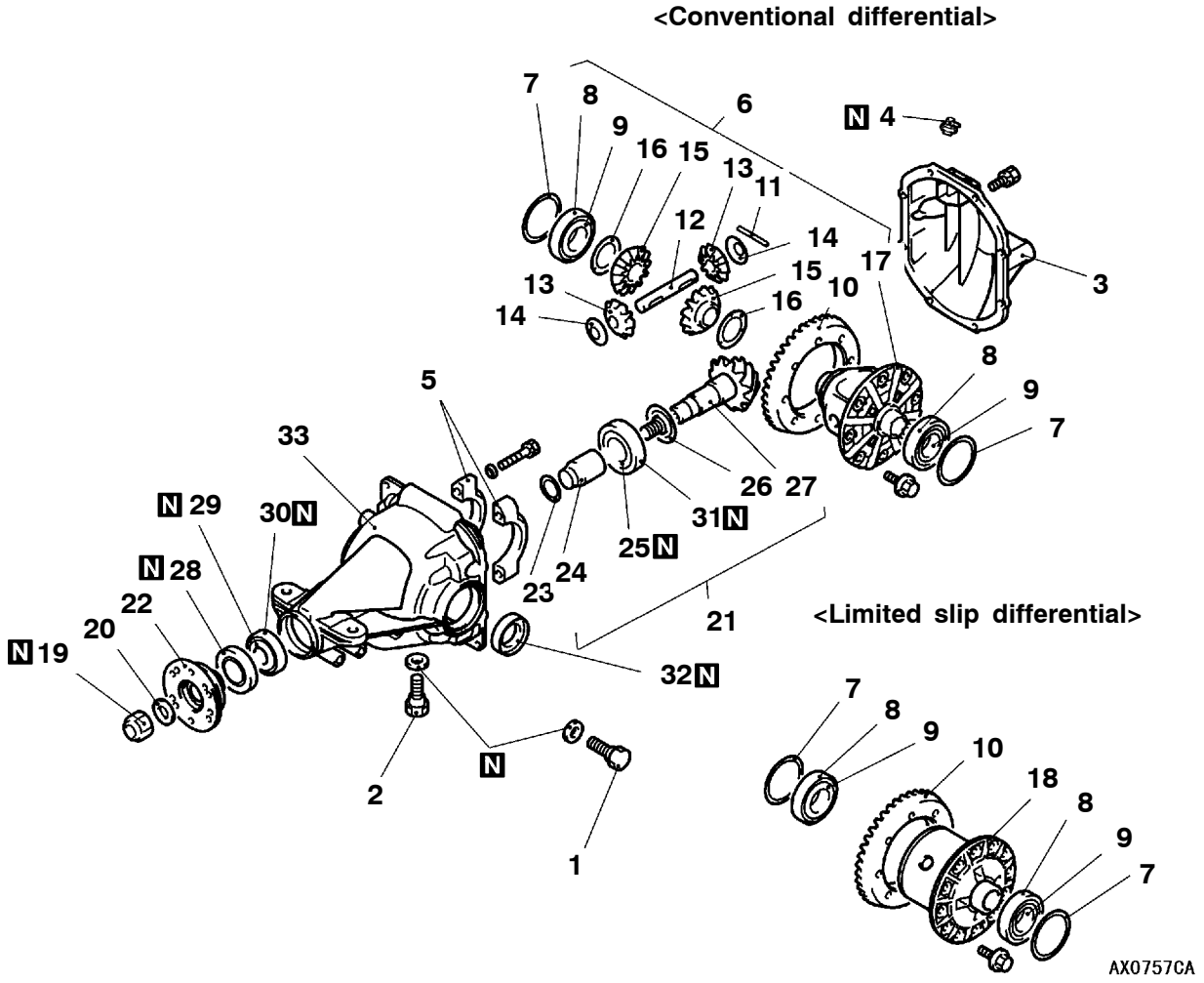


**Disassembly steps**

◀A▶ ● Inspection before disassembly
1. Filler plug
2. Drain plug
3. Differential cover
4. Vent plug
5. Bearing cap
◀B▶ 6. Differential case assembly
◀B▶ 7. Differential side shim
◀B▶ 8. Side bearing outer race
◀C▶ 9. Side bearing inner race
◀D▶ 10. Drive gear
◀E▶ 11. Lock pin
12. Pinion shaft
13. Pinion gear
14. Pinion washer
15. Side gear
16. Side gear thrust spacer
17. Differential case
18. Limited slip differential case assembly*
◀F▶ 19. Self-locking nut
20. Washer
◀G▶ 21. Drive pinion assembly
◀G▶ 22. Companion flange
23. Drive pinion front shim (For adjusting preload of drive pinion)
24. Drive pinion spacer
◀H▶ 25. Drive pinion rear bearing inner race
26. Drive pinion rear shim (For adjusting drive pinion height)
27. Drive pinion
◀I▶ 28. Oil seal
◀I▶ 29. Drive pinion front bearing inner race
◀I▶ 30. Drive pinion front bearing outer race
◀J▶ 31. Drive pinion rear bearing outer race
32. Oil seal
33. Differential carrier

Purchased from www.WorkshopManuals.co.uk

www.WorkshopManuals.co.uk

<Rear differential lock with limited slip differential>

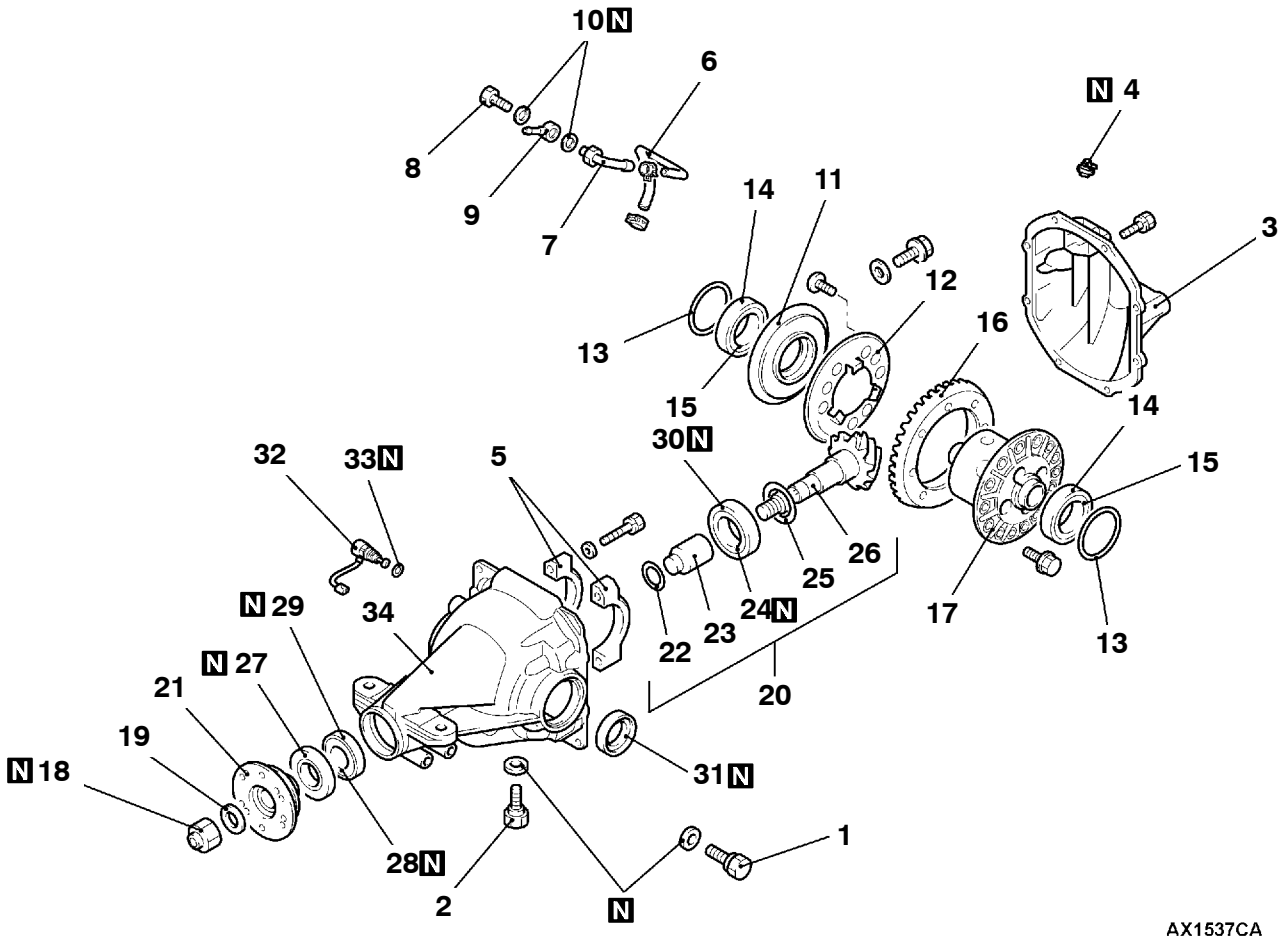


**Disassembly steps**

◀A▶ ● Inspection before disassembly
1. Filler plug
2. Drain plug
3. Differential cover
4. Vent plug
5. Bearing cap
6. Hose
7. Air pipe assembly (A)
8. Eye bolt
9. Air pipe assembly (B)
10. Gasket
11. Actuator assembly
12. Pressure plate
◀B▶ 13. Differential side shim
◀B▶ 14. Side bearing outer race
◀C▶ 15. Side bearing inner race
◀D▶ 16. Drive gear
17. Limited slip differential case assembly*
◀F▶ 18. Self-locking nut
19. Washer
◀G▶ 20. Drive pinion assembly
◀G▶ 21. Companion flange
22. Drive pinion front shim (For adjusting preload of drive pinion)
23. Drive pinion spacer
◀H▶ 24. Drive pinion rear bearing inner race
25. Drive pinion rear shim (For adjusting drive pinion height)
26. Drive pinion
◀I▶ 27. Oil seal
◀I▶ 28. Drive pinion front bearing inner race
◀I▶ 29. Drive pinion front bearing outer race
◀J▶ 30. Drive pinion rear bearing outer race
31. Oil seal
32. Rear differential lock position switch
33. Gasket
34. Differential carrier

Purchased from www.WorkshopManuals.co.uk

www.WorkshopManuals.co.uk

## DISASSEMBLY SERVICE POINTS

### ◀A▶ INSPECTION BEFORE DISASSEMBLY

Except for the following standard values, inspection procedure is the same as GROUP 26 – Pre-removal Inspection.

**DRIVE GEAR BACKLASH**

**Standard value: 0.13 - 0.18 mm**

**DIFFERENTIAL GEAR BACKLASH**

**Standard value: 0 - 0.076 mm**

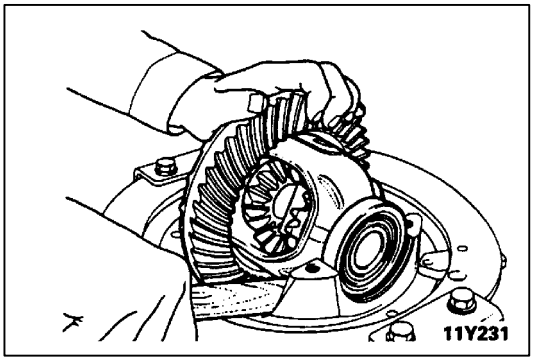


### ◀B▶ DIFFERENTIAL CASE ASSEMBLY/DIFFERENTIAL SIDE SHIM/SIDE BEARING OUTER RACE REMOVAL

Use the handle of a hammer to remove the differential case assembly, differential side shims and side bearings.

**Caution**
**When taking out the differential case assembly, be careful not to drop and damage the differential side shims or the side bearing outer races.**

NOTE
Keep the right and left side bearings and side bearing outer race separate, so that they do not become mixed at the time of assembly.

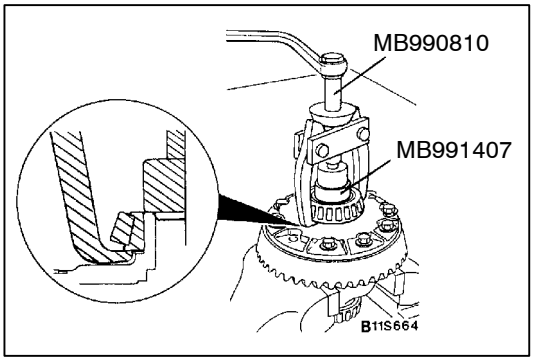


### ◀C▶ SIDE BEARING INNER RACE REMOVAL

Use special tools to pull out the side bearing inner race.

NOTE
Attach the prongs of special tools to the inner race of the side bearing through the openings in the differential case.

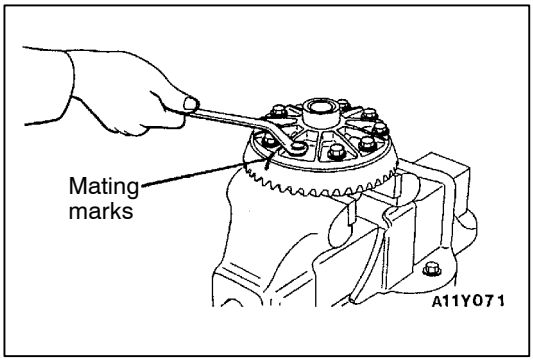


### ◀D▶ DRIVE GEAR REMOVAL

1. Make mating marks to the differential case and the drive gear.
2. Loosen the drive gear attaching bolts in diagonal sequence to remove the drive gear.

Purchased from www.WorkshopManuals.co.uk

www.WorkshopManuals.co.uk

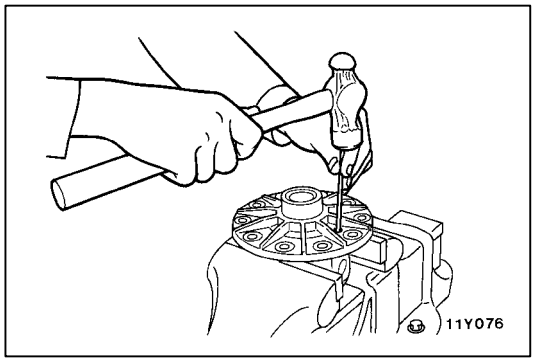


### ◀E▶ LOCK PIN REMOVAL

Drive out the lock pin with a punch.

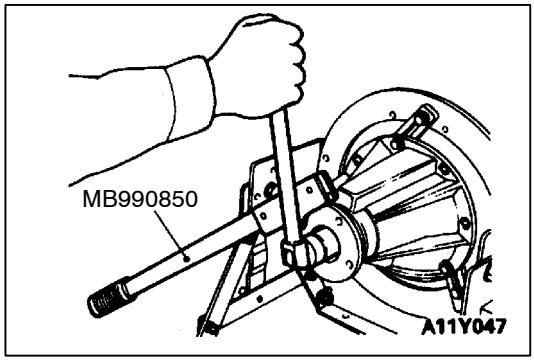


### ◀F▶ SELF-LOCKING NUT REMOVAL

Use special tool to hold the companion flange, and then remove the companion flange self-locking nut.

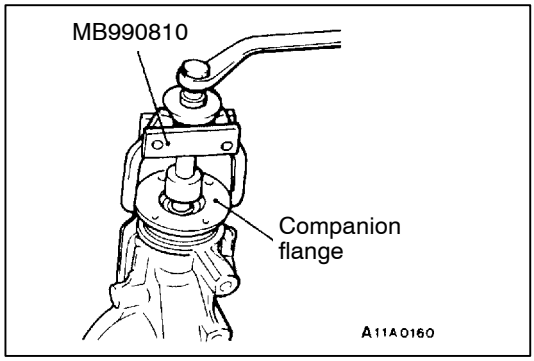


### ◀G▶ DRIVE PINION ASSEMBLY/COMPANION FLANGE REMOVAL

1. Make the mating marks to the drive pinion and companion flange.

   **Caution**
   **Do not make mating marks on the contact surfaces of the companion flange and propeller shaft.**

2. Use special tools to pull out the companion flange.

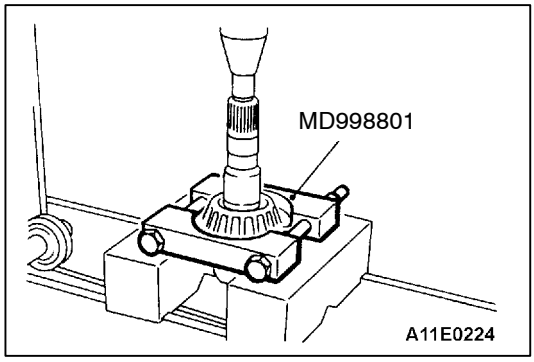


### ◀H▶ DRIVE PINION REAR BEARING INNER RACE REMOVAL

Use special tools to pull out the front bearing inner race.

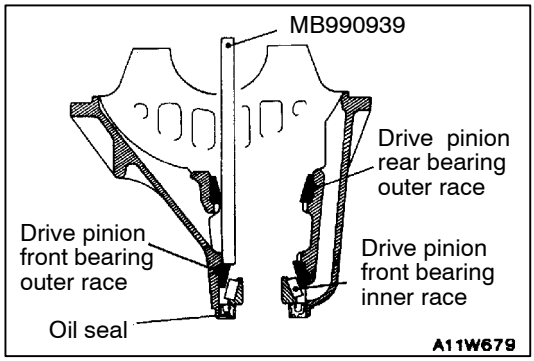


### ◀I▶ OIL SEAL/DRIVE PINION FRONT BEARING INNER RACE/DRIVE PINION FRONT BEARING OUTER RACE REMOVAL

Use special tool to remove drive pinion front bearing outer race.

Purchased from www.WorkshopManuals.co.uk

www.WorkshopManuals.co.uk

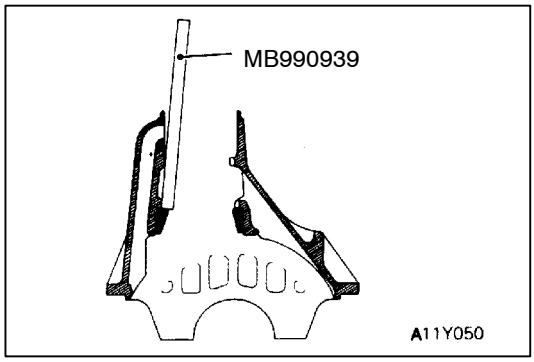


### ◀J▶ DRIVE PINION REAR BEARING OUTER RACE REMOVAL

Use special tool to remove the drive pinion rear bearing outer race.

Purchased from www.WorkshopManuals.co.uk

www.WorkshopManuals.co.uk

## REASSEMBLY

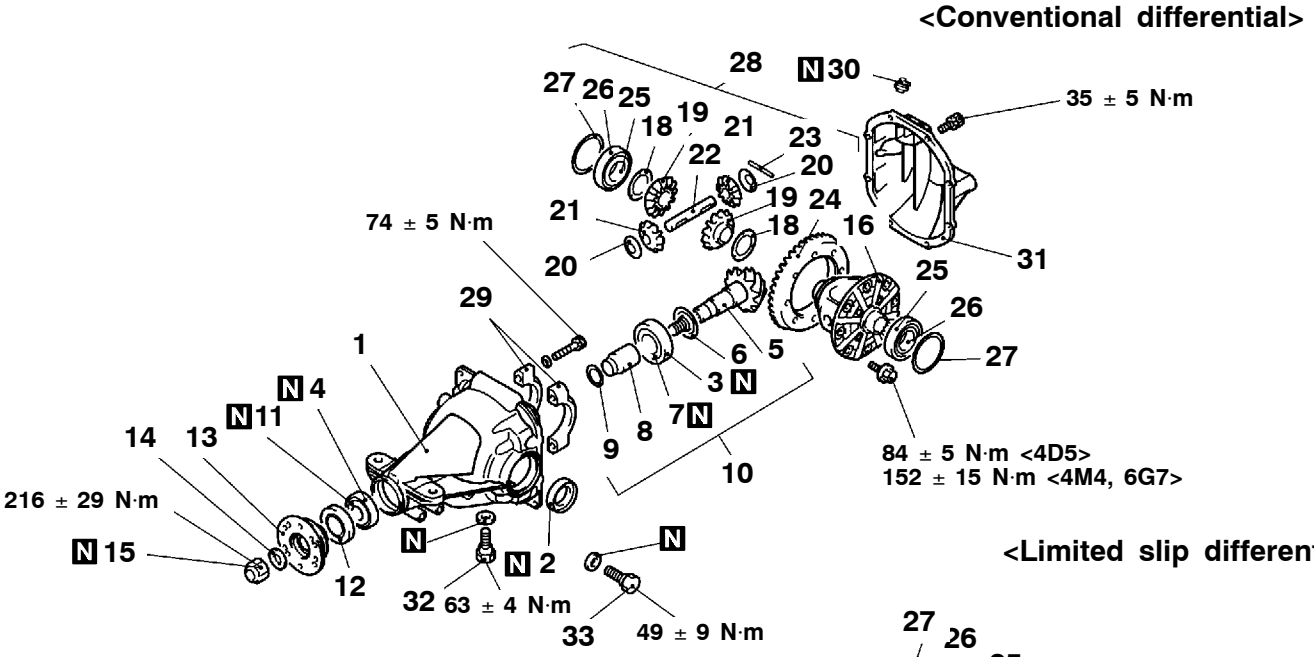


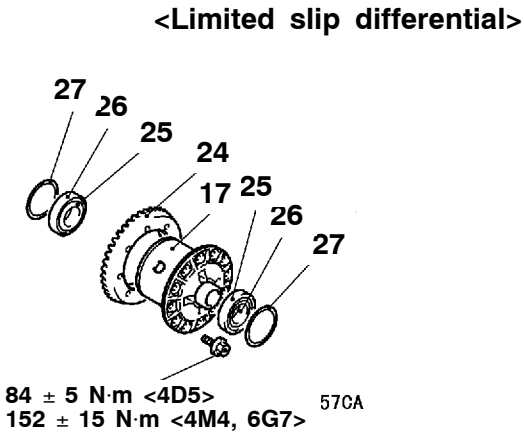


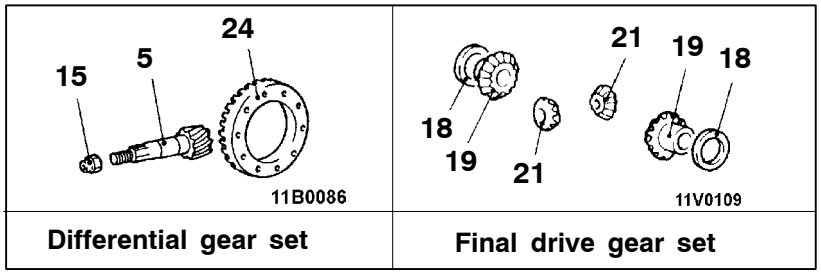


| Differential gear set | Final drive gear set |
|---|---|

**Reassembly steps**

1. Differential carrier
▶A◀ 2. Oil seal
▶B◀ 3. Drive pinion rear bearing outer race
▶C◀ 4. Drive pinion front bearing outer race
▶C◀ D Drive pinion height adjustment
5. Drive pinion
6. Drive pinion rear shim (For adjusting drive pinion height)
7. Drive pinion rear bearing inner race
8. Drive pinion spacer
▶E◀ D Drive pinion turning torque adjustment
9. Drive pinion front shim (For adjusting drive pinion preload)
10. Drive pinion assembly
11. Drive pinion front bearing inner race
▶E◀ 12. Oil seal
13. Companion flange
14. Washer
15. Self-locking nut
16. Differential case
17. Limited slip differential case assembly
▶F◀ ● Differential gear backlash adjustment
18. Side gear thrust spacer
19. Side gear
20. Pinion washer
21. Pinion gear
22. Pinion shaft
▶G◀ 23. Lock pin
▶H◀ 24. Drive gear
▶I◀ 25. Side bearing inner race
26. Side bearing outer race
27. Side bearing shim
28. Differential case assembly
▶J◀ 29. Bearing cap
30. Vent plug
31. Differential cover
32. Drain plug
33. Filler plug
▶J◀ ● Final drive gear backlash adjustment

Purchased from www.WorkshopManuals.co.uk

www.WorkshopManuals.co.uk

<Rear differential lock with limited slip differential>

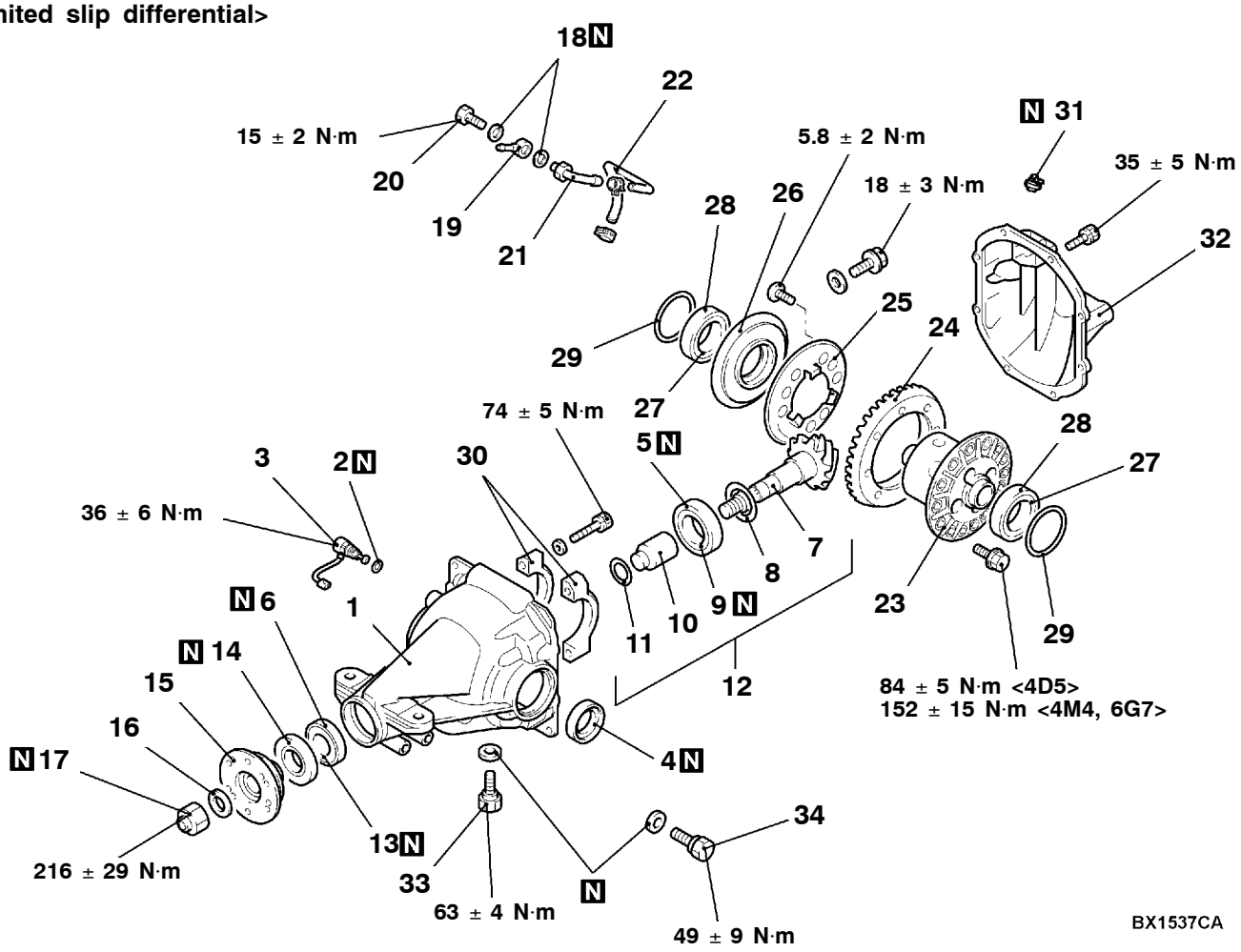


**Reassembly steps**

1. Differential carrier
2. Gasket
3. Rear differential lock position switch
▶A◀ 4. Oil seal
▶B◀ 5. Drive pinion rear bearing outer race
▶C◀ 6. Drive pinion front bearing outer race
▶D◀ ● Drive pinion height adjustment
7. Drive pinion
8. Drive pinion rear shim (For adjusting drive pinion height)
9. Drive pinion rear bearing inner race
10. Drive pinion spacer
▶E◀ ● Drive pinion turning torque adjustment
11. Drive pinion front shim (For adjusting drive pinion preload)
12. Drive pinion assembly
13. Drive pinion front bearing inner race
▶E◀ 14. Oil seal
15. Companion flange
16. Washer
17. Self-locking nut
18. Gasket
19. Air pipe assembly (B)
20. Eye bolt
21. Air pipe assembly (A)
22. Hose
23. Limited slip differential case assembly
▶H◀ 24. Drive gear
25. Pressure plate
26. Actuator assembly
▶I◀ 27. Side bearing inner race
28. Side bearing outer race
29. Side bearing shim
▶J◀ 30. Bearing cap
31. Vent plug
32. Differential cover
33. Drain plug
34. Filler plug
▶J◀ ● Final drive gear backlash adjustment

Purchased from www.WorkshopManuals.co.uk

www.WorkshopManuals.co.uk

## Lubrication and Adhesive Points

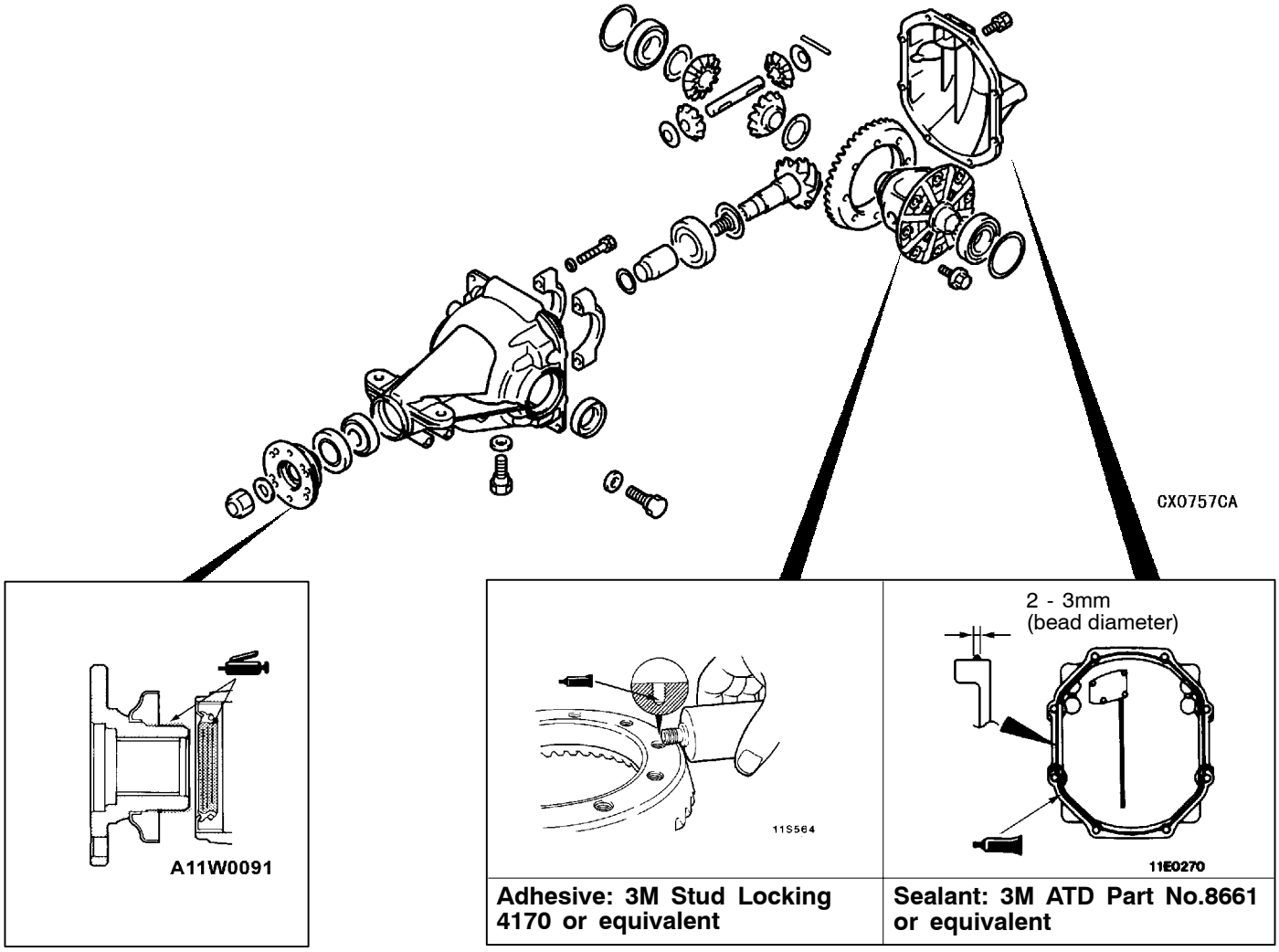


| | |
|---|---|
| Adhesive: 3M Stud Locking 4170 or equivalent | Sealant: 3M ATD Part No.8661 or equivalent |

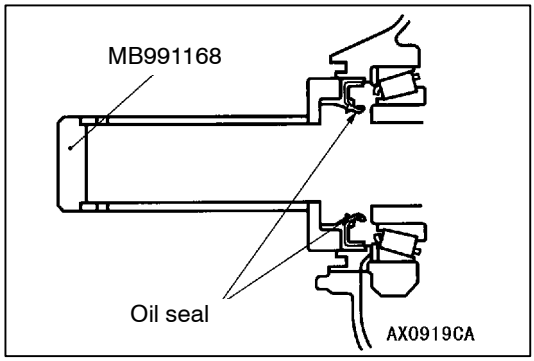


## REASSEMBLY SERVICE POINTS

### ▶A◀ OIL SEAL PRESS-FITTING

Purchased from www.WorkshopManuals.co.uk

www.WorkshopManuals.co.uk

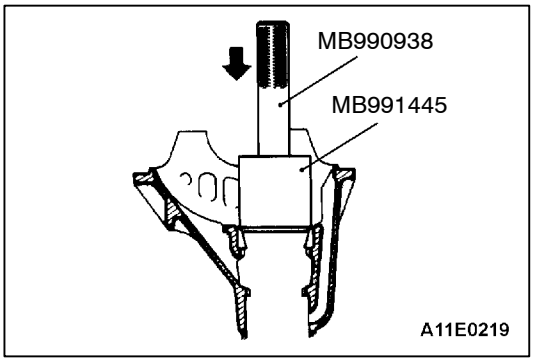


**▶B◀ DRIVE PINION REAR BEARING OUTER RACE PRESS-FITTING**

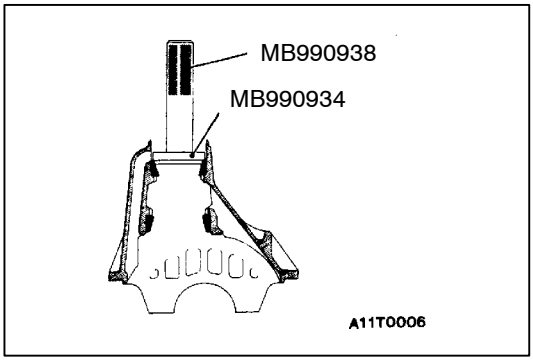


**▶C◀ DRIVE PINION FRONT BEARING OUTER RACE PRESS-FITTING**

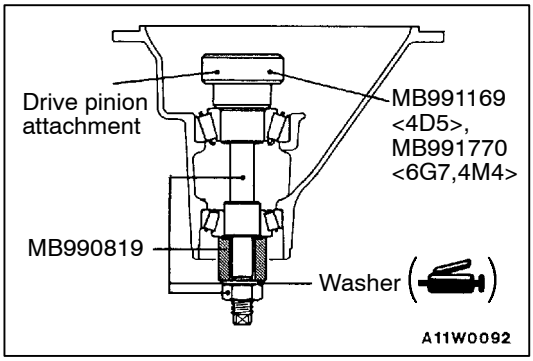


**▶D◀ DRIVE PINION HEIGHT ADJUSTMENT**

Adjust the drive pinion height by the following procedures:

1. Apply multipurpose grease to the washer of special tool.
2. Install special tool and drive pinion front and rear bearing inner races to the gear carrier in the sequence shown in the illustration.

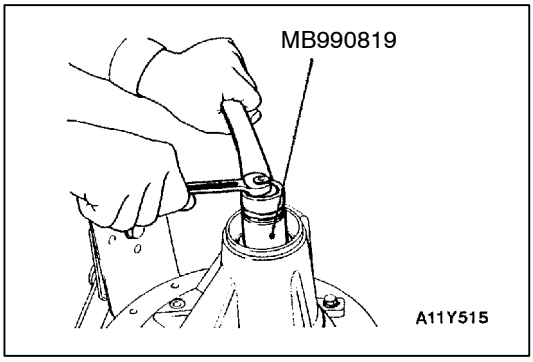


3. Tighten the nut of special tool a little at a time while measuring the turning torque of the drive pinion. Then confirm the turning torque(without the oil seal) is at the standard value.

**Standard value:**

| Bearing type | Turning torque |
|---|---|
| New | 1.94 - 2.25 N·m |

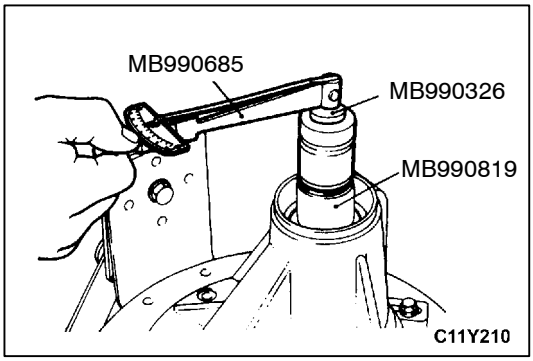


Purchased from www.WorkshopManuals.co.uk

www.WorkshopManuals.co.uk

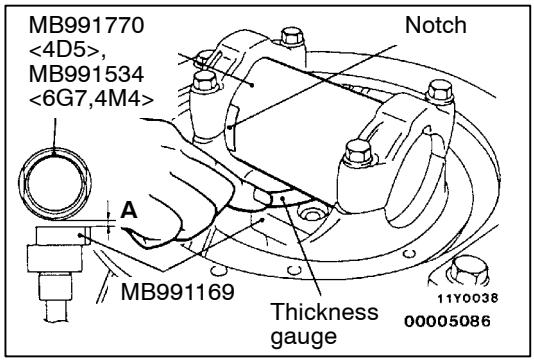


4. Clean the side bearing hub.
5. Place special tool between the side bearing hub of the gear carrier, and position the notch as shown in the illustration. Then tighten side bearing mounting bolt.
6. Use a thickness gauge to measure the clearance (A) between special tools.

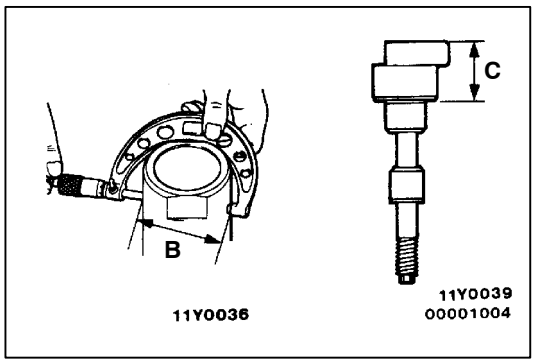


7. Remove special tools (MB991170, MB991169).
8. Use a micrometer to measure the shown dimensions (B, C) of special tools.

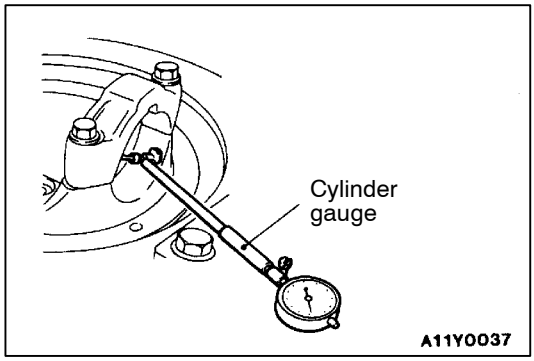


9. Install the bearing cap, and then use a cylinder gauge to measure inside diameter (D) of the bearing cap.
10. Calculate thickness (F) of the required drive pinion rear shim twice by the following formula. Select a shim which most closely matches this thickness.
    F = A + B + C - 1/2D - 86.00 mm

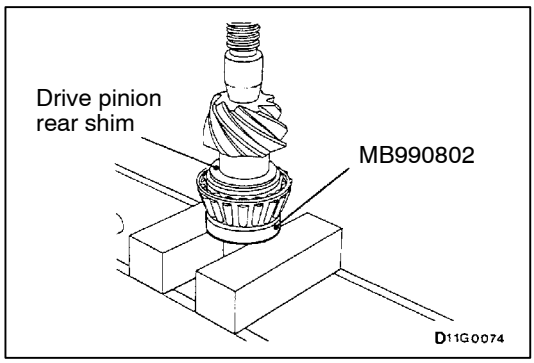


11. Fit the selected drive pinion rear shim(s) to the drive pinion, and press-fit the drive pinion rear bearing inner race by using special tool.

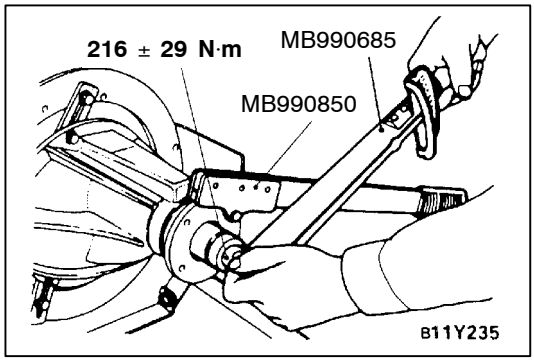


### ▶E◀ DRIVE PINION TURNING TORQUE ADJUSTMENT /OIL SEAL INSTALLATION

1. Insert the drive pinion into the gear carrier, and then install the following parts in sequence from the carrier rear side. Drive pinion spacer, drive pinion front shim and drive pinion front bearing inner race, companion flange.

   NOTE
   Do not install the oil seal.

2. Tighten the companion flange to the specified torque by using special tool.

Purchased from www.WorkshopManuals.co.uk

www.WorkshopManuals.co.uk

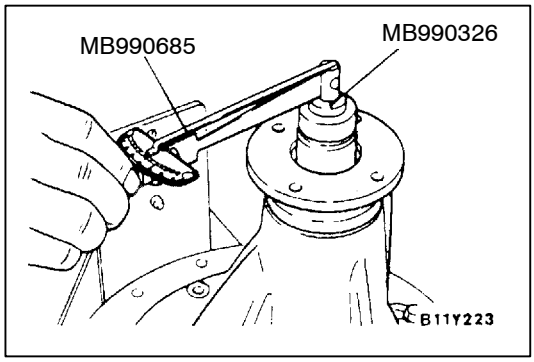


3. Measure the drive pinion turning torque (without the oil seal).

**Standard value:**

| Bearing division | Turning torque |
|---|---|
| New | 1.94 - 2.25 N·m |

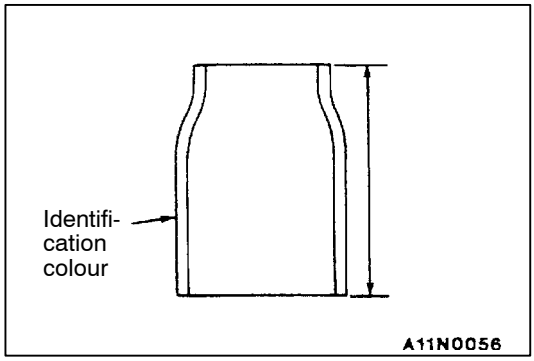


4. If the drive pinion turning torque is not within the standard value, adjust the turning torque by replacing the drive pinion front shim(s) or the drive pinion spacer.

NOTE
When selecting the drive pinion front shims, if the number of shims is large, reduce the number of shims to a minimum by selecting the drive pinion spacers.
Also, select the drive pinion spacer from the following two types.

| Height of drive pinion spacer mm | Identification colour |
|---|---|
| 52.50 | Yellow |
| 52.84 | Red |

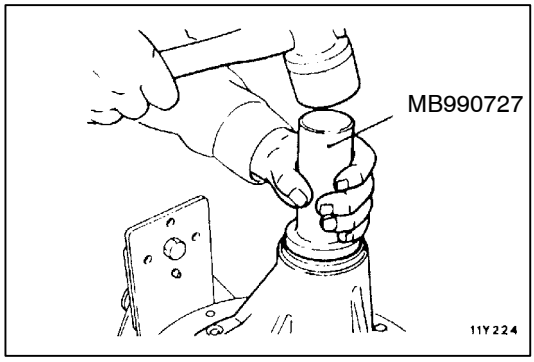


5. Remove the companion flange and drive pinion again. Then insert the drive pinion front bearing inner race into the gear carrier. Use special tool to press-fit the oil seal.

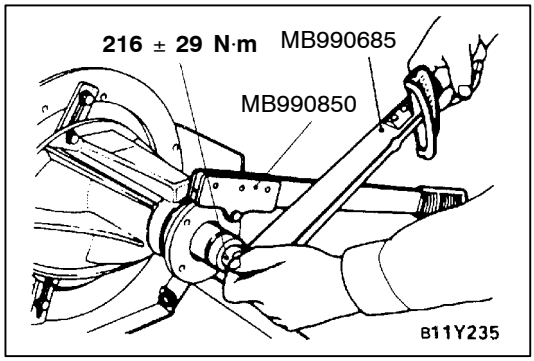


6. Install the drive pinion assembly and companion flange with mating marks properly aligned. Tighten the companion flange self-locking nut to the specified torque using special tool.

Purchased from www.WorkshopManuals.co.uk

www.WorkshopManuals.co.uk

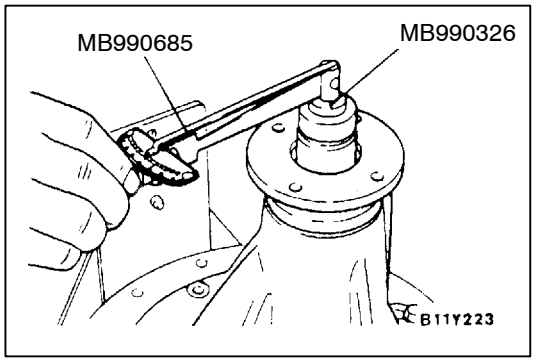


7. Measure the drive pinion turning torque (with oil seal) to verify that the drive pinion turning torque complies with the standard value.

**Standard value:**

| Bearing division | Companion flange lubrication | Turning torque |
|---|---|---|
| New | None (With anti-rust agent) | 2.03 - 2.34 N·m |
| | Gear oil applied | 2.10 - 2.40 N·m |

8. If the turning torque is not within the standard value, check the tightening torque of the companion flange self-locking nut, and the installation of the oil seal.

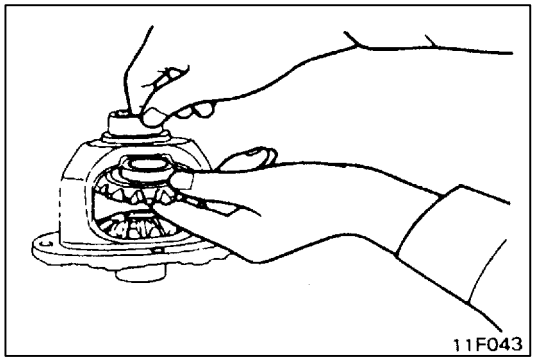


## ▶F◀ DIFFERENTIAL GEAR BACKLASH ADJUSTMENT

Adjust the differential gear backlash by the following procedure.

1. Assemble the side gears, side gear thrust spacers, pinion gears, and pinion washers into the differential case.
2. Temporarily install the pinion shaft.

   NOTE
   Do not assemble the thrust block and lock pin yet.

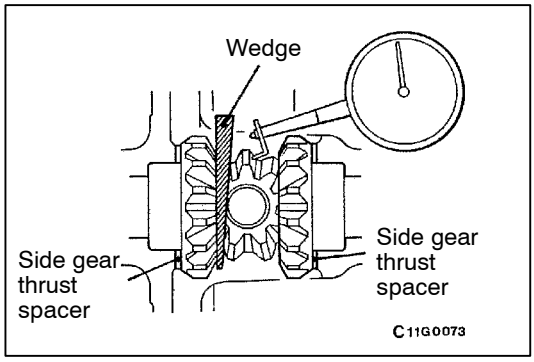


3. Insert a wedge between the side gear and the pinion shaft to lock the side gear.
4. While locking the side gear with the wedge, measure the differential gear backlash with a dial indicator on the pinion gear.

   **Standard value: 0 - 0.076 mm**

   Measure by the same procedure for the other pinion gear.

   **Limit: 0.2 mm**
5. If the backlash exceeds the limit value, replace side bearing adjustment spacers.
6. If adjustment is not possible, replace the side gears and pinion gears as a set.
7. Check that the backlash is within the limit value and that the differential gear turns smoothly.

Purchased from www.WorkshopManuals.co.uk

www.WorkshopManuals.co.uk

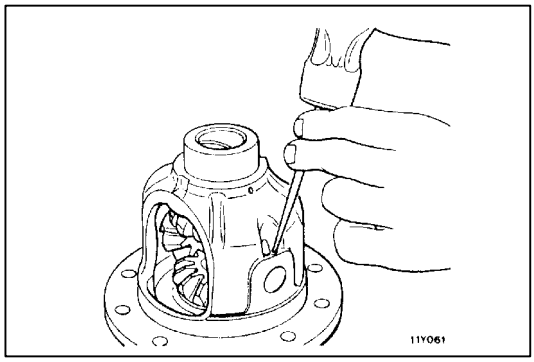


### ▶G◀ LOCK PIN INSTALLATION

1. Align the pinion shaft lock pin hole with the differential case lock pin hole, and drive in the lock pin.
2. Stake the lock pin with a punch on both sides.

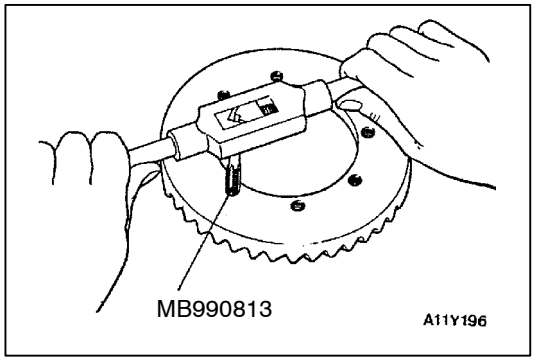


### ▶H◀ DRIVE GEAR INSTALLATION

1. Clean the drive gear attaching bolts.
2. Remove the adhesive adhered to the threaded holes of the drive gear by turning the special tool (tap M10 x 1.25), and then clean the threaded holes by applying compressed air.

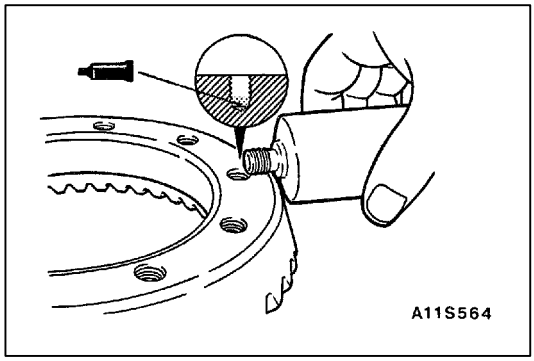


3. Apply the specified adhesive to the threaded holes of the drive gear.

   **Specified adhesive:**
   **3M Stud Locking 4170 or equivalent**

4. Install the drive gear onto the differential case with the mating marks properly aligned. Tighten the bolts to the specified torque in a diagonal sequence.

   **Tightening torque: 84 ± 5 N·m <4D5>**
   **152 ± 15 N·m <4M4, 6G7>**

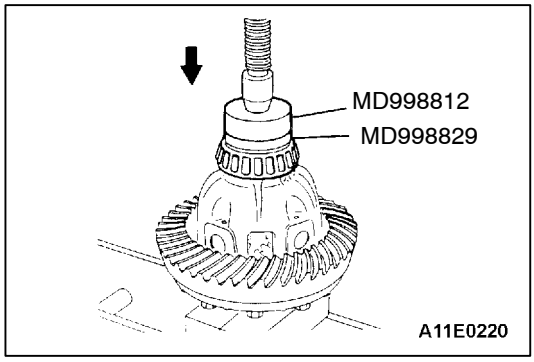


### ▶I◀ SIDE BEARING INNER RACE INSTALLATION

Use special tool to press-fit the side bearing inner races into the differential case.

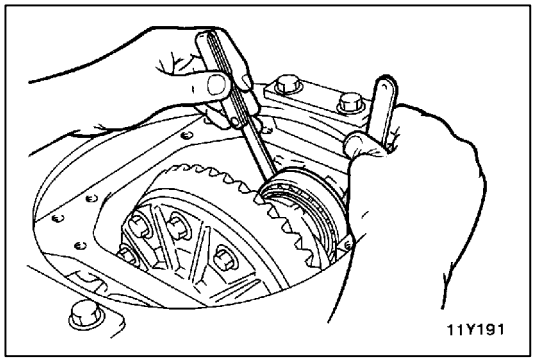


### ▶J◀ BEARING CAP INSTALLATION/FINAL DRIVE GEAR BACKLASH ADJUSTMENT

Adjust drive gear backlash as follows:

1. Assemble the differential case with the side bearing outer race to the gear carrier.
2. Press the differential case to one side to measure the clearance of the side bearing outer race and the gear carrier.

Purchased from www.WorkshopManuals.co.uk

www.WorkshopManuals.co.uk

3. Select two pairs of the side bearing spacer with the thickness derived from the sum of the clearance and a half of pre-load, 0.05 mm.

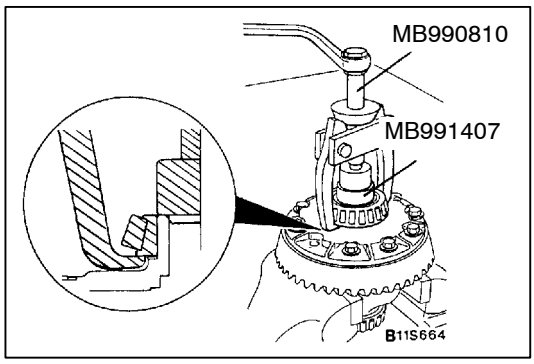


4. Remove the side bearing with special tools.

   NOTE
   Hook the claws of the special tool with the side bearing inner race by using the notches (two areas) of the differential case side.

5. Assemble the selected side bearing spacers to each side.

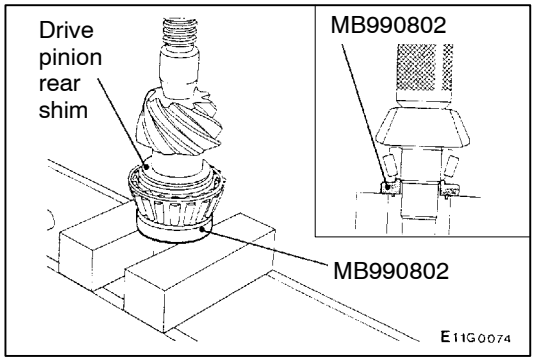


6. Use special tools to press-fit the side bearing inner case into the differential case. After installing the outer race, assemble the differential case to the gear carrier.
7. Align the mating marks of differential carrier and the bearing cap with each other to tighten to the specified torque.

   **Tightening torque: 74 ± 5 N·m**

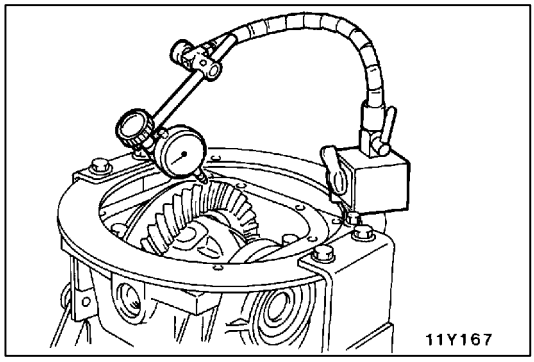


8. Measure the drive gear backlash.

   NOTE
   Measure at four points or more on the circumference of the drive gear.

   **Standard value: 0.13 - 0.18 mm**

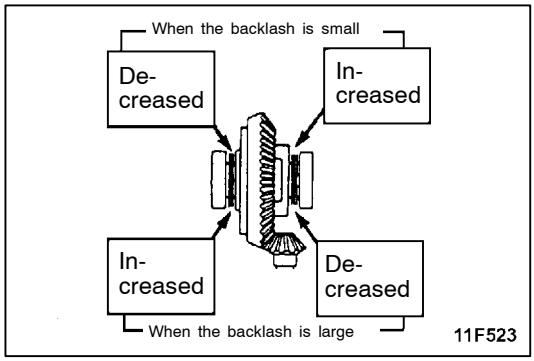


9. If the backlash is not within the standard value, move the side bearing spacer as shown in the illustration to adjust the backlash.

   NOTE
   The increment of side bearing spacer must be coincided with the decreased amount.

10. Inspect the tooth condition at the final drive gear and make an adjustment if required. (Refer to GROUP 26 – Pre-removal Inspection.)

Purchased from www.WorkshopManuals.co.uk

www.WorkshopManuals.co.uk

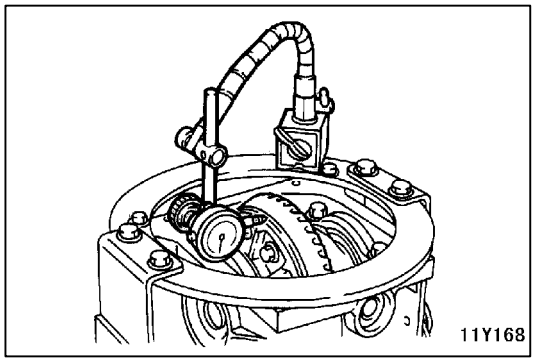


11. Measure the drive gear runout.

    **Limit: 0.05 mm**

12. When drive gear runout exceeds the limit, remove the differential case and then the drive gears, moving them to different positions and reinstall them.
13. If adjustment is not possible, replace the differential case or drive gear and drive pinion as a set.

Purchased from www.WorkshopManuals.co.uk

www.WorkshopManuals.co.uk

**NOTES**

Purchased from www.WorkshopManuals.co.uk

www.WorkshopManuals.co.uk

# WHEEL AND TYRE

**Click on the applicable bookmark to selected the required model year.**

Purchased from www.WorkshopManuals.co.uk

www.WorkshopManuals.co.uk


# WHEEL AND TYRE

## CONTENTS

GENERAL INFORMATION . . . . . 2
SERVICE SPECIFICATIONS . . . . . 2
TROUBLESHOOTING . . . . . 3
ON-VEHICLE SERVICE . . . . . 7
Tyre Inflation Pressure Check . . . . . 7
Tyre Wear Check . . . . . 7
Wheel Runout Check . . . . . 7
WHEEL AND TYRE . . . . . 7

Purchased from www.WorkshopManuals.co.uk

www.WorkshopManuals.co.uk

# GENERAL INFORMATION

The wheels and tyres of the following specifications have been established.

## SPECIFICATIONS

| Items | | 4D5, 4M4 | | 6G7 |
|---|---|---|---|---|
| | | GL, GLX | GLS | |
| Wheel | Type | Steel type<br>Aluminium type* | Aluminium type | Aluminium type |
| | Size | 16 × 6JJ<br>16 × 7JJ* | 16 × 7JJ | 16 × 7JJ |
| | Amount of wheel offset mm | 46 | 46 | 46 |
| | Pitch circle diameter (P.C.D.) mm | 139.7 | 139.7 | 139.7 |
| Tyre | Size | 235/80R16 109S<br>265/70R16 112S* | 265/70R16 112S | 265/70R16 112H |

NOTE
*: Optional items

# SERVICE SPECIFICATIONS

| Items | | Limit |
|---|---|---|
| Tread depth of tyre mm | | 1.6 |
| Wheel runout (Radial runout) mm | Steel wheel | 1.2 or less |
| | Aluminium wheel | 1.0 or less |
| Wheel runout (Lateral runout) mm | Steel wheel | 1.2 or less |
| | Aluminium wheel | 1.0 or less |

Purchased from www.WorkshopManuals.co.uk

www.WorkshopManuals.co.uk

# TROUBLESHOOTING

| Symptom | | Probable cause | | Remedy | Reference page |
|---|---|---|---|---|---|
| Rapid wear at shoulders | 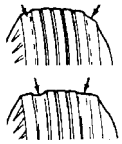 11X0109 | Under-inflation or lack of rotation | 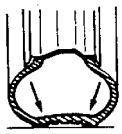 11X0116 | Adjust the tyre pressure. | 31-7. |
| Rapid wear at centre | 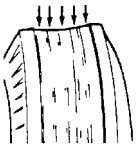 11X0110 | Over-inflation or lack of rotation | 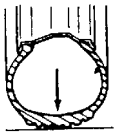 11X0117 | | |
| Cracked treads | 11X0111 | Under-inflation | | Adjust the tyre pressure. | 31-7. |
| Wear on one side | 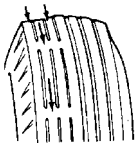 11X0112 | Excessive camber | 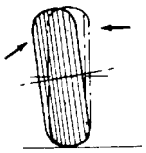 11X0118 | Inspect the camber. | Refer to GROUP 33A - On-vehicle Service. |
| Feathered edge | 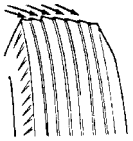 11X0113 | Incorrect toe-in | 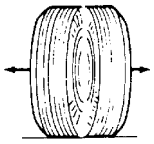 11X0119 | Adjust the toe-in. | |
| Bald spots | 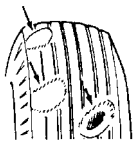 11X0114 | Unbalanced wheel | 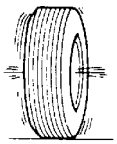 11X0120 | Adjust the imbalanced wheels. | 31-4. |
| Scalloped wear | 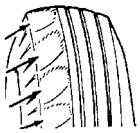 11X0115 | Lack of rotation of tyres or worn or out-of-alignment suspension | | Rotate the tyres and check the front suspension alignment. | Refer to GROUP 33A - On-vehicle Service. |

Purchased from www.WorkshopManuals.co.uk

www.WorkshopManuals.co.uk

## WHEEL BALANCE ACCURACY

## PURPOSE

This section contains tips and procedures for achieving accurate wheel balance. Steering wheel vibration and /or body shake can result if any of these procedures are not carefully observed.

1. Wheels and tires must be properly mounted on a balancer in order to achieve correct balance. Centering the wheel on the shaft of the balancer is essential for proper mounting.
2. Off-the-car wheel balancers must be calibrated periodically to ensure good balancing results. An inaccurately calibrated balancer could cause unnecessary replacement of tires, shocks, suspension components, or steering components.

Check your balancer's calibration approximately every 100 balances. Your wheel balancer's instruction manual should include calibration procedures. If the calibration procedures specifically for your balancer are missing, use the generic steps in this section for zero calibration, static balance, and dynamic balance checks. The wheel balancer calibration checks are also described in the flowchart. (Refer to P.31-6)

## PROCEDURE

### Balancing Tips

1. Confirm that the balancer's cone and the wheel mounting cone are undamaged and free of dirt and rust.
2. On this vehicle the wheel's center hole on the hub side has a chamfered edge. Use a back-mounting cone on your wheel balancer to center the wheel on the balancer shaft.
3. Install a wheel mounting cone. The appropriate size cone for this vehicle is 67.0 mm.
4. Before balancing the wheel, remove any wheel weights from both sides. Also check both sides for any damage.
5. When installing wheel weights, hammer them at a straight (not diagonal) angle.

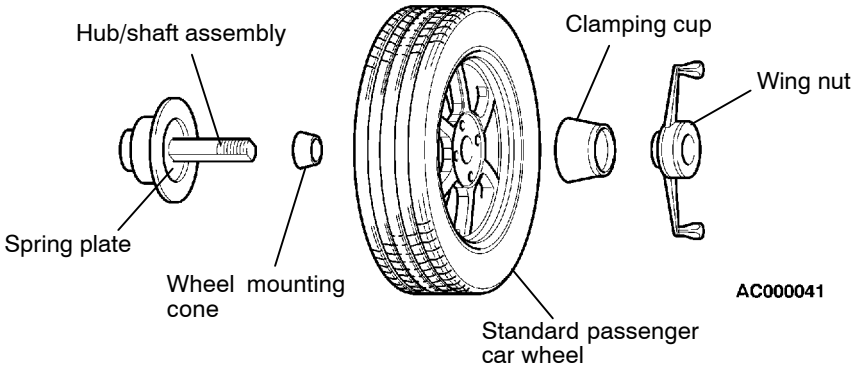


### Confirming Proper Balance

1. After balancing the wheel, loosen the wing nut and turn the wheel 180° against the balancer's hub. Then retighten the wing nut and check the balance again. Repeat wheel balance if necessary.
2. Turn the wheel again 180° against the balancer's hub. If the wheel becomes out-of-balance each time it is turned against the balancer's hub, the wheel balancer may require calibration.

### Wheel Balancer Calibration Checks

1. Mount an undamaged original-equipment alloy rim and tire assembly (wheel) onto your off-the-car wheel balancer. Balance the wheel.
2. <<Zero Calibration Check>>
   Loosen the balancer wing nut, rotate the wheel a half turn (180°), and retighten the nut. Recheck the balance.

Purchased from www.WorkshopManuals.co.uk

www.WorkshopManuals.co.uk

- If the imbalance is 5 g or less, the zero calibration is OK. Rebalance the wheel, then go to Step 4 to check static balance.
- If the imbalance is more than 5 g, go to Step 3.

3. Loosen the balancer wing nut, rotate the wheel 1/4 turn (90°), and retighten the nut. Recheck the wheel balance.
- If the imbalance is 5 g or less, the wheel may not be centered on the balancer, or the balancing cones, the cup, and/or wing nut are damaged, dirty, or inappropriate for the wheel. You may need to refer to the balancer manufacturer's instructions to verify the correct attachments. after making the necessary corrections, recheck the wheel balance. If OK, then go to Step 4.
- If the imbalance is more than 5 g, the balancer requires calibration. Contact the balancer manufacturer for calibration by their repair representative.

4. <Static Balance Check>
Attach a 5-g weight to the outer rim. Recheck the balancer. The balancer should detect 5 ± 2 g of imbalance 170° to 190° away from both the inner and outer 5-g weights.
- If the imbalance is within specification, the static balance calibration is correct. Go to Step 5 to check the dynamic balance.
- If the imbalance is out of specification, the balancer requires calibration. Contact the balancer manufacturer for calibration by their repair representative.

5. <Dynamic Balance Check>
Attach a 5-g weight to the inner rim at 180° opposite the 5-g weight that was added in step 4. Recheck the balance. The balancer should detect 5 ± 2g of imbalance 170° to 190° away from both the inner and outer 5-g weights.
- If the imbalance is within specification, the dynamic balance calibration is correct. The balancer calibration checks are complete.
- If the imbalance is out of specification, the balancer requires calibration. Contact the balancer manufacturer for calibration by their repair representative.

Purchased from www.WorkshopManuals.co.uk

www.WorkshopManuals.co.uk

## WHEEL BALANCER CALIBRATION CHECKING FLOW CHART

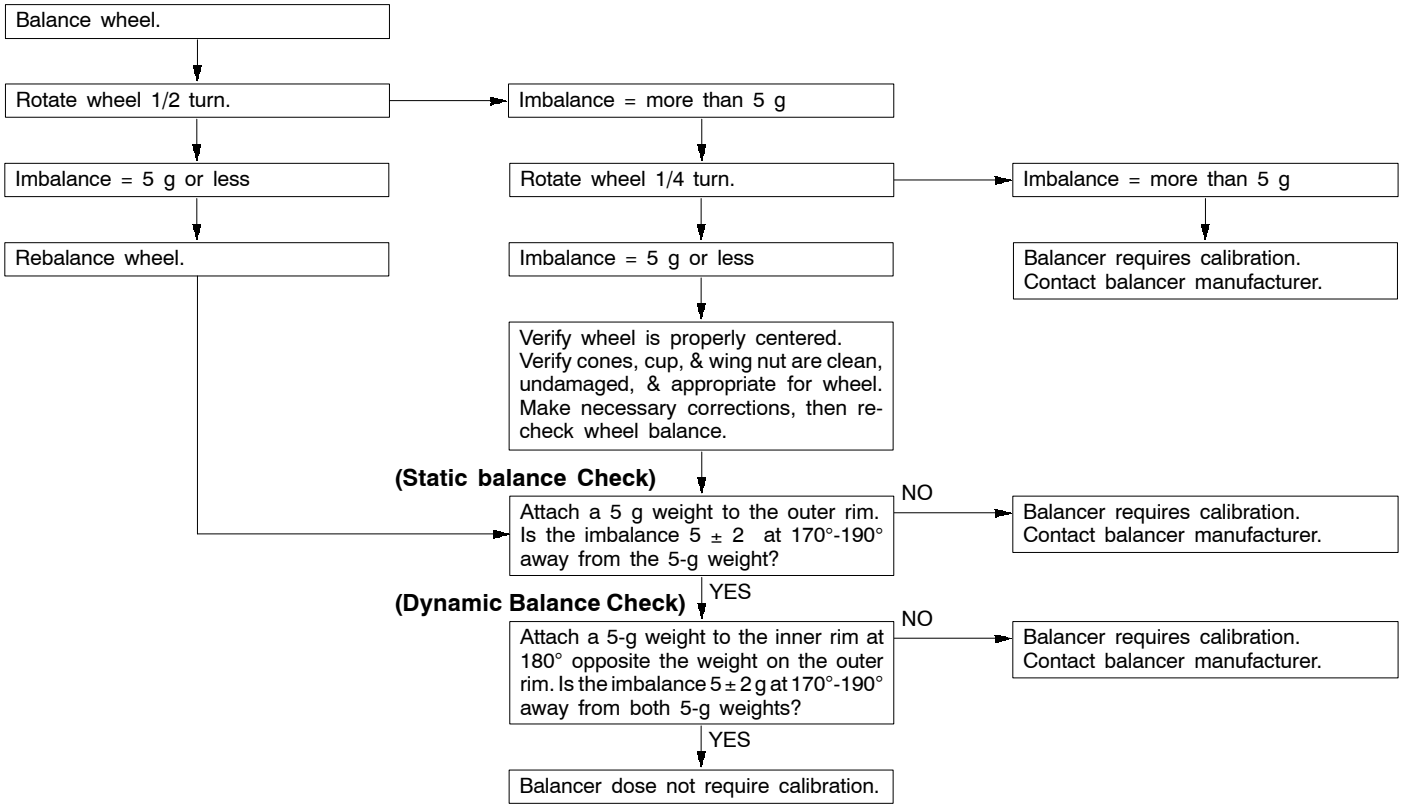


Purchased from www.WorkshopManuals.co.uk

www.WorkshopManuals.co.uk

# ON-VEHICLE SERVICE

## TYRE INFLATION PRESSURE CHECK

NOTE
For information on tyre inflation pressure, refer to the label attached near the driver's side door striker.

## TYRE WEAR CHECK

Measure the tread depth of tyres.

**Limit: 1.6 mm**

If the remaining tread depth is less than the limit, replace the tyre.

NOTE
When the tread depth of tyres is reduced to 1.6 mm or less, wear indicators will appear.

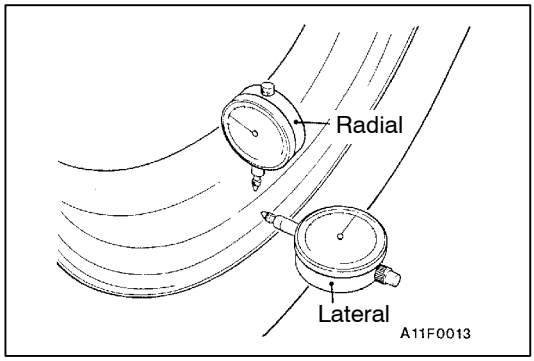


## WHEEL RUNOUT CHECK

Jack up the vehicle so that the wheels are clear of the floor. While slowly turning the wheel, measure wheel runout with a dial indicator.

**Limit:**

| Item | Steel wheel | Aluminium wheel |
|---|---|---|
| Radial runout mm | 1.2 | 1.0 |
| Lateral runout mm | 1.2 | 1.0 |

If wheel runout exceeds the limit, replace the wheel.

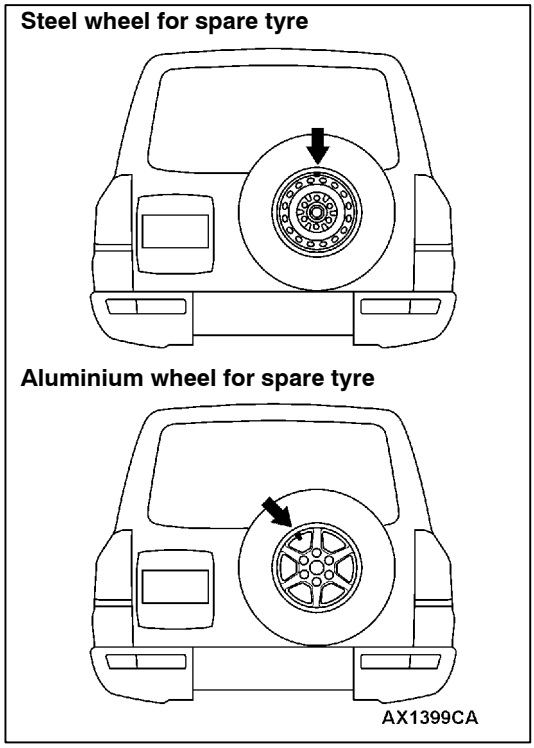


# WHEEL AND TYRE

## INSTALLATION SERVICE POINT

Tighten the wheel nut to the specified torque.

**Tightening torque: 108 ± 10 N·m**

When installing the spare tyre to the back door, position the valve as shown, and then tighten the lock cylinder and bolt to the specified torque.

NOTE
If the valve is positioned at the bottom, rain water may leak into the valve, causing the valve corrosion.

**Tightening torque: 46 ± 8 N·m**

Purchased from www.WorkshopManuals.co.uk

www.WorkshopManuals.co.uk

**NOTES**

Purchased from www.WorkshopManuals.co.uk

www.WorkshopManuals.co.uk

# Service Bulletins

**Click on the applicable bookmark to select the Service Bulletin.**

Purchased from www.WorkshopManuals.co.uk

www.WorkshopManuals.co.uk

MITSUBISHI MOTORS

# SERVICE BULLETIN

QUALITY INFORMATION ANALYSIS
OVERSEAS SERVICE DEPT. MITSUBISHI MOTORS CORPORATION

| SERVICE BULLETIN | No.: MSB-00E31-001 | | |
|---|---|---|---|
| | Date: 2000-07-15 | <Model> | <M/Y> |
| Subject: WHEEL BALANCE ADJUSTMENT PROCEDURE | | ALL MODELS | 00-00 |
| Group: WHEEL & TIRES | Draft No.: 99AL121708 | | |
| INFORMATION/ CORRECTION | INTERNATIONAL CAR ADMINISTRATIO OFFICE | T.NITTA - PROJECT LEADER<br>AFTER SALES SERVICE & CS PROMOTION | |

## 1. Description:

There have been cases where the troubles failed to be removed completely because of incorrect balancer machine handling or use of an inaccurately calibrated balancer machine. This Service Bulletin informs you of the cautions to be taken when handling a balancer machine and the balance check procedures to prevent such a case from recurring in a dealer.

## 2. Details:

To solve the problems caused by steering or body vibrations, it is essential to balance the wheels and tires accurately. For this, the wheel and tire must be accurately centered with respect to the balancer shaft, and the balancer must also be calibrated accurately.

Purchased from www.WorkshopManuals.co.uk

www.WorkshopManuals.co.uk

1. Check to ensure that the balancer cone and the cone-contacting portion of the wheel are free from any dirt, corrosion and damage.
2. Remove all balance weights attached, stones caught in the tire grooves and mud adhered from th wheel and tire.
3. Install the wheel and tire to the balancer in the following procedure:

   **Caution:**
   - **The socket diameter of a Mitsubishi genuine wheel is ϕ 67.0 mm (2.64 in) for passenger cars and ϕ 107.5 mm (4.23 in) the other types of vehicle. Be sure to use the balancer cone matching the socket diameter.**
   - **Use the black-mounted cone to secure the wheel to the balancer if possible. If installable i this method, go to Step 4.**
   - **If the socket diameter of the wheel is too large to secure it with the back-mounted cone, secure the wheel to the balancer with the front mounting cone. If the wheel is to be secured in this way, go to Step 6.**
   - **Do not use the log nut hole mounting method because it does not allow the accurat centering of the wheel.**
4. When securing with back-mounted cone:

   Operate the balancer to measure the imbalance, an attach weight in accordance with the measurements.

   **Caution: Be sure to drive the weight straight in the wheel.**

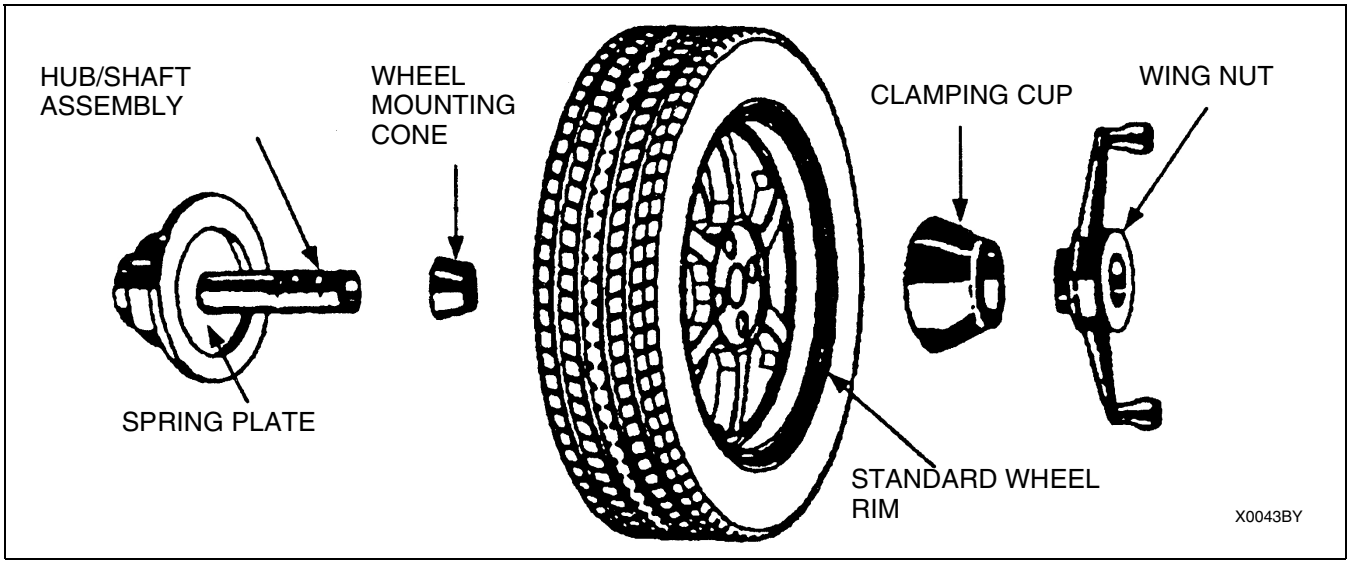


5. Loosen the wing nut, rotate the wheel half a turn (180°) and tighten the nut again. Then, perform the measurement again to confirm that the wheel is in balance. If not in balance, check if the balancer is correctly calibrated. Go to Step 11.


Purchased from www.WorkshopManuals.co.uk

www.WorkshopManuals.co.uk

6. When securing with front-mounted cone:

   **Caution:**
   - **When pressing in the cone by tightening the wing nut slowly, hold the tire by hand such that the wheel may contact the spring plate of the balancer evenly.**
   - **If this work is not performed with care, the wheel would fail to be centered correctly. Futhermore, the cone-contacting area of the wheel would deform, preventing subsequent wheel balancing from being performed accurately.**

   Operate the balancer to measure the imbalance. Mark the point attributable to the imbalance with a piece of chalk.
   (Do not attach any balance weight.)

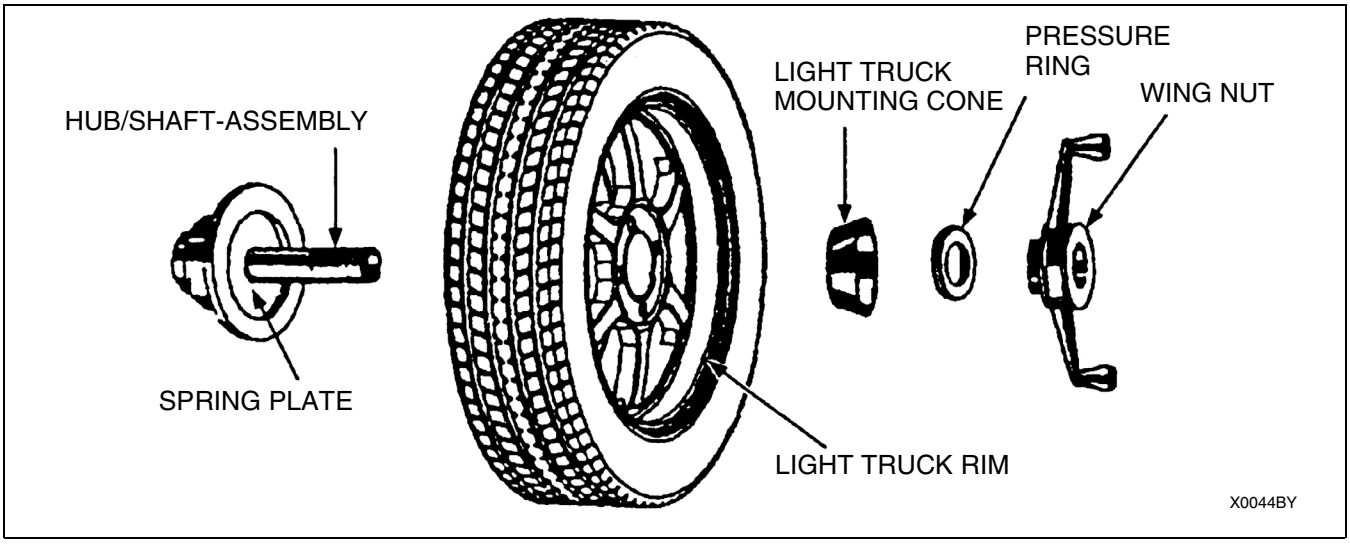


7. Loosen the wing nut, rotate the wheel half a turn (180°) and tighten the wing nut carefully again. Then, perform the measurement again.
8. Repeat the measurement three times in the same manner, and take either of the following measures according to the measurement again.

   **Caution: Be sure to drive the weight straight in the wheel.**

   a. If the results are the same in all measurements, attach a weight according to the indication on th machine.
   b. If the weight difference among the three measurements is less than 0.5 oz and the thre indicated points are all within a range of less than 8 inch (30°), attach a weight having the average weight at the mean position.
   c. If the weight difference among the three measurements is 0.5 oz or more or if the indicate positions are not within a range of less than 8 inch (30°), check if th balancer is correctly calibrated. Go to step 11.
9. Reinstall the tire to the vehicle, and perform a driving test. If the tire still generates vibration, perform the Ste 10.
10. Attach the adapter (MB991820) on the back side of th wheel, and install the wheel onto the machine using the back-mounted cone. Then, perform the balance adjustment again. For the procedure, refer to Steps 4 and 5

    **Caution** **Check to ensure that the contactin portions of the adapter, wheel and balancer are free from any dirt, corrosion and damage.**

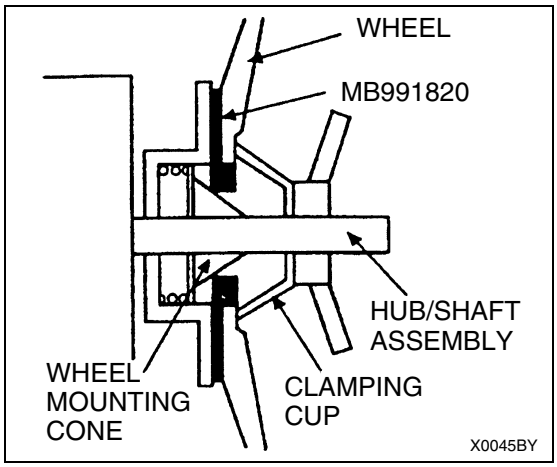




Purchased from www.WorkshopManuals.co.uk

www.WorkshopManuals.co.uk

11. Checking for calibration.

Check your balancer's calibration approximately every 100 balances. Your whee balancer's instruction manual should include calibration procedures. If the calibration procedures specifically for your balancer are missing, use following steps for zero calibration, static balance, and dynamic balance checks. Th wheel balancer calibration checks are also described in the flowchart on next page.

a. Mount an undamaged original-equipment alloy rim and tire assembly (wheel) onto your off-the-car wheel balancer. Balance the wheel.

b. ***Zero Calibration Check.*** Loosen the balancer wing nut, rotate the wheel a half-turn (180°), and retighten the nut. Recheck the balance.

   i) If the imbalance is 5 grams or less, the zero calibration is OK. Rebalance the wheel, then g to Step d to check the static balance.

   ii) If the imbalance is more than 5 grams, go to Step c.

c. Loosen th balancer wing nut, rotate the wheel ¼ turn (90°), and retighten the nut. Recheck th wheel balance

   i) If the imbalance is 5 grams or less, the wheel may not be centered on th balancer, or the balancing cones, the cup, and/or wing nut are damaged, dirty, or inappropriate for the wheel. You may need to refer to th balancer manufacturer's instructions to verify the correct attachments. After making the necessary correction, recheck the wheel balance. If OK, then go to Step d.

   ii) If the imbalance is more than 5 grams, th balancer requires calibration, Contact th balancer manufacturer for calibration by their repair representative.

d. ***Static Balance Check.*** Attach a 5-gram weight to the outer rim. Recheck the balancer. The balancer should detect 5±2 grams of imbalance 170° to190° away from the 5-gram weight.

   i) If the imbalance is within specification, the static balance calibration is correct, Go to Step e to check the dynamic balance.

   ii) If the imbalance is out of specification, th balancer requires calibration. Contact th balancer manufacturer for calibration by their repair representative.

e. ***Dynamic Balance Check.*** Attach a 5-gram weight to the inner rim at 180° opposite the 5-gram weight that was added in Step d. Recheck the balance. Th balancer should detect 5±2 grams of imbalance 170° to 190° away from both the inner and outer 5-gram weights.

   i) If the imbalance is within specification, the dynamic balance calibration is correct. Th balancer calibration checks are complete.

   ii) If the imbalance is out of specification, th balancer requires calibration. Contact th balancer manufacturer for calibration by their repair representative.



Purchased from www.WorkshopManuals.co.uk

www.WorkshopManuals.co.uk

# WHEEL BALANCER CALIBRATION CHECKS

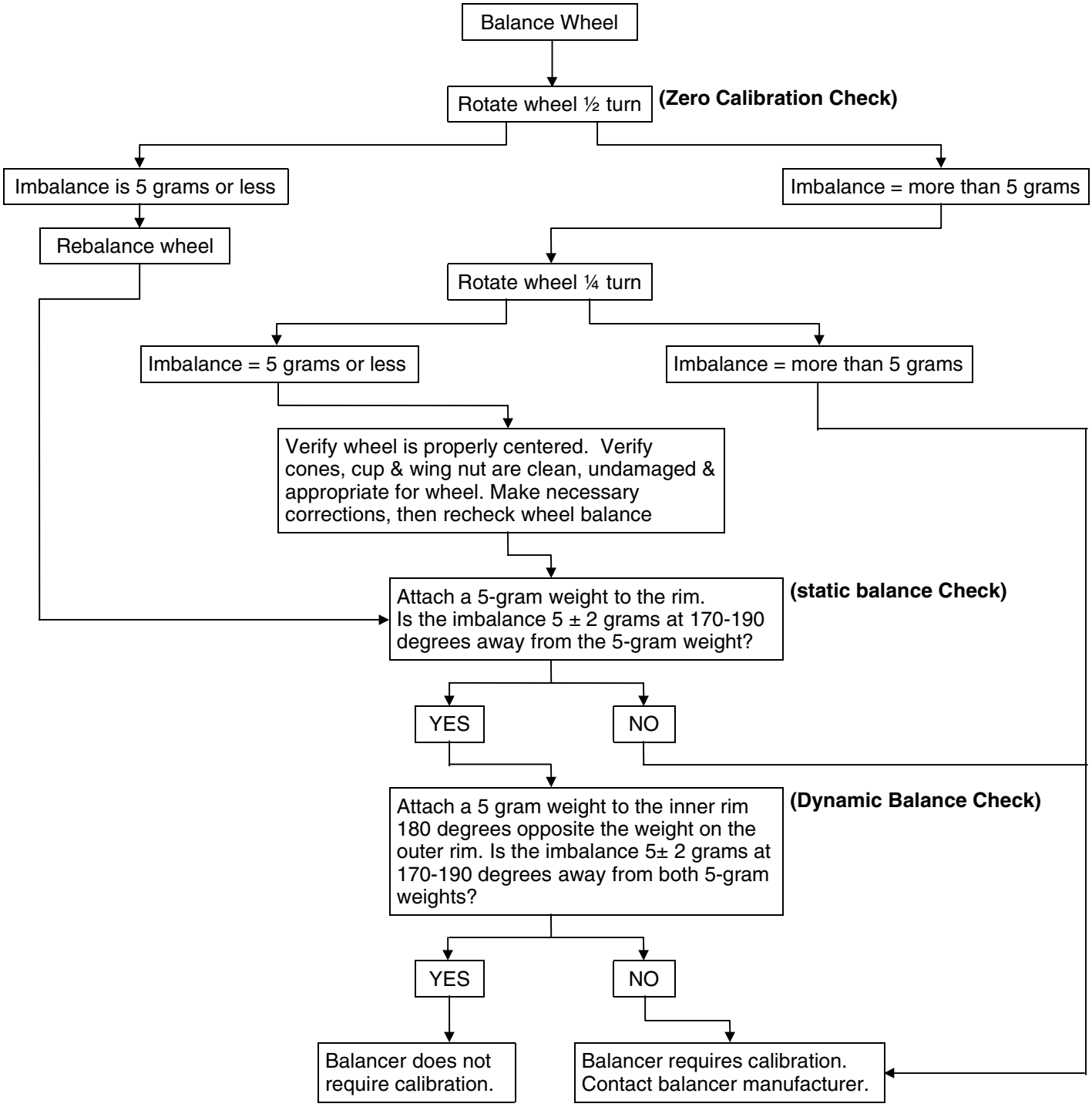




Purchased from www.WorkshopManuals.co.uk

www.WorkshopManuals.co.uk

# POWER PLANT MOUNT

**Click on the applicable bookmark to selected the required model year.**

Purchased from www.WorkshopManuals.co.uk

www.WorkshopManuals.co.uk


# POWER PLANT MOUNT

## CONTENTS

GENERAL INFORMATION ..... 2
SPECIAL TOOLS ..... 3
ENGINE MOUNTING ..... 4
TRANSMISSION MOUNTING ..... 6
No.1 CROSSMEMBER ..... 7

Purchased from www.WorkshopManuals.co.uk

www.WorkshopManuals.co.uk

# GENERAL INFORMATION

For vehicles with A/T, the engine and transmission assembly is supported at three points, where insulators are used. (Two points for the engine, one point for the transmission.)
For vehicles with M/T, the engine and transmission assembly is supported at four points, where insulators are used. (Two points for the engine, two points for the transmission.)

- For the engine mount, a liquid-charged mount has been introduced in order to improve driving comfort and reduce vibration and noise during idling.
- The transmission mount supports the transmission and the transmission mount center member elastically (dual anti-vibration method) in order to reduce vibration, which is transmitted to the vehicle body.
- For the transmission mount insulator, a shear-type insulator has been introduced.

## CONSTRUCTION DIAGRAM

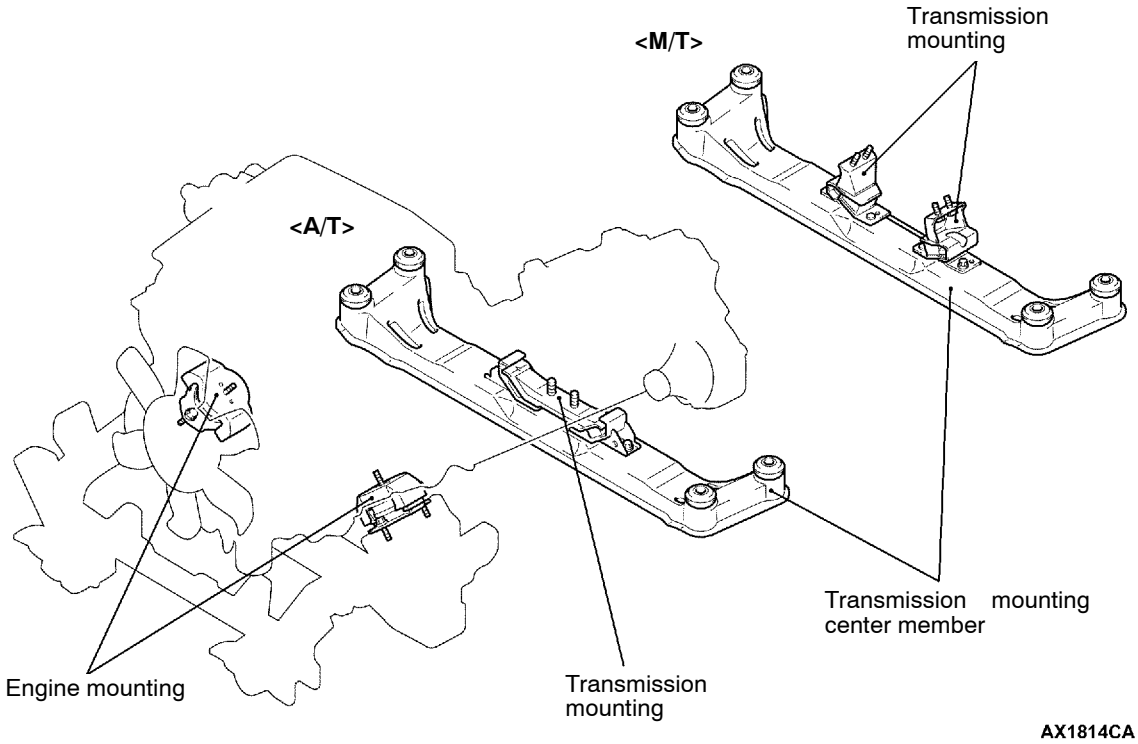


Purchased from www.WorkshopManuals.co.uk

www.WorkshopManuals.co.uk

# SPECIAL TOOLS

| Tool | Number | Name | Use |
|---|---|---|---|
| 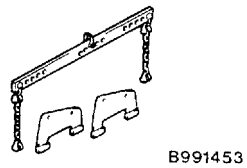  | MB991453 | Engine hanger | To support the engine assembly during removal and installation of the engine mounting |
| 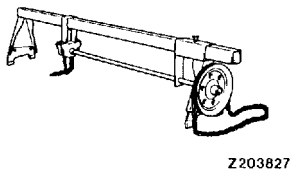  | MZ203827 | Engine lifter | |

Purchased from www.WorkshopManuals.co.uk

www.WorkshopManuals.co.uk

# ENGINE MOUNTING

## REMOVAL AND INSTALLATION

**Caution**

***: Indicates parts which should be initially tightened, and then fully tightened after placing the vehicle horizontally and loading the full weight of the engine on the vehicle body.**

**Pre-removal and Post-installation Operation**
- Under Cover and Skid Plate Removal and Installation
- Battery Removal and Installation
- Air Cleaner Removal and Installation (Refer to GROUP 15.)
- Engine Cover Removal and Installation (Refer to GROUP 11A,11B,11C.)
- Radiator Removal and Installation (Refer to GROUP 14.)
- Glow Plug Relay and Solenoid Valve Assembly Removal and Installation <4M4>
- Intercooler Removal and Installation<4M4> (Refer to GROUP 15.)

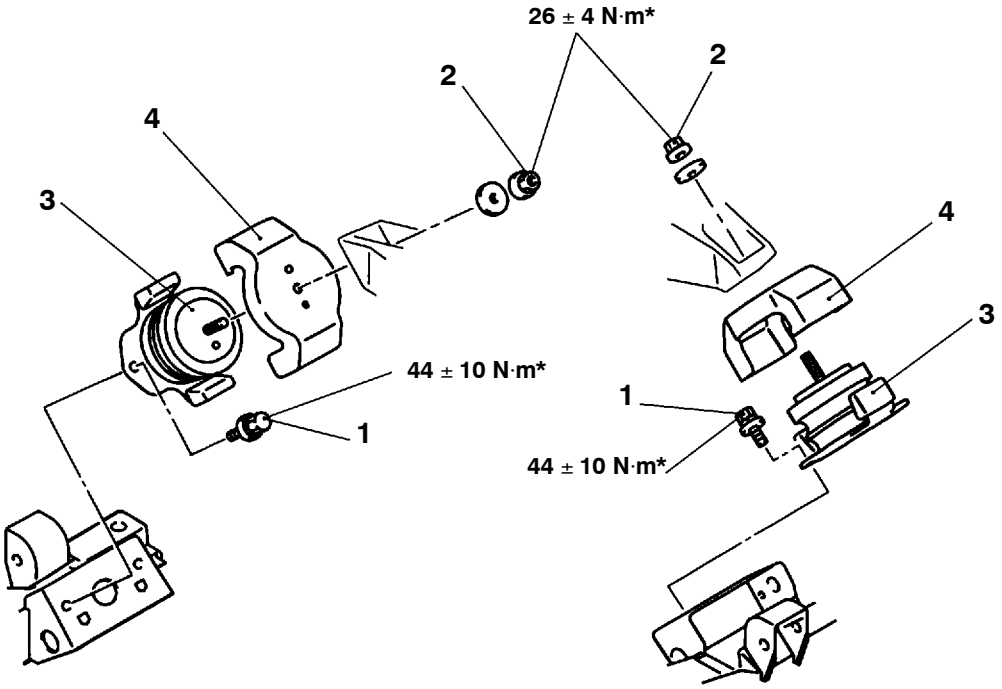


AX1247CA

**Removal steps**
- brake hose clip (Refer to GROUP 33A - Upper Arm Assembly.)
- Connecting bolt between steering gear and joint (Refer to GROUP 37A - Power Steering Gear and Linkage.) ◀A▶
- Power steering pressure hose mounting bolt (Refer to GROUP 37A - Power Steering Gear and Linkage.) ◀A▶
- A/T oil cooler tube mounting bolt (Refer to GROUP 23 - Transmission Oil Cooler.) ◀B▶
- Vacuum hose (Refer to GROUP 26 - Free Wheel Assembly, Differential Carrier.)

1. Engine mounting bolt
2. Engine mounting nut
3. Engine mounting bracket
4. Engine mounting stopper

Purchased from www.WorkshopManuals.co.uk

www.WorkshopManuals.co.uk

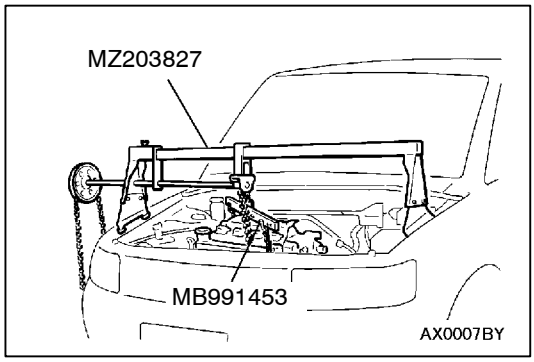


## REMOVAL SERVICE POINTS

### ◀A▶ ENGINE MOUNTING BOLT AND NUT REMOVAL

1. Use the special tool to support the engine.
2. Remove the engine mount mounting bolts and nuts.

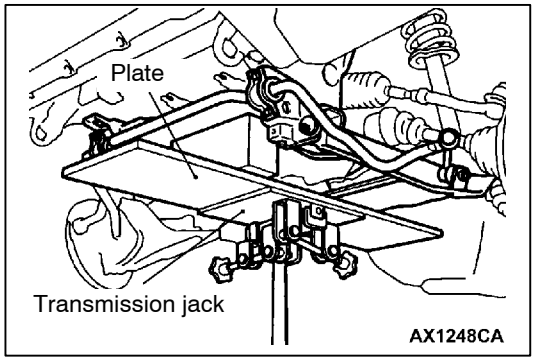


### ◀B▶ENGINE MOUNTING BRACKET REMOVAL

1. Support the No.1 crossmember using the transmission jack.
2. Unscrew the No.1 crossmember mounting nut and then put down the No.1 crossmember to remove the engine mount.

## INSPECTION

- Check the engine mounting bracket for cracks, separation or deformation.
- Check the engine mounting stoppers for deformation.

Purchased from www.WorkshopManuals.co.uk

www.WorkshopManuals.co.uk

# TRANSMISSION MOUNTING

## REMOVAL AND INSTALLATION

**Pre-removal and Post-installation Operation**
Raise the engine and transmission assembly until its weight is not applied to the insulator, and support it securely.

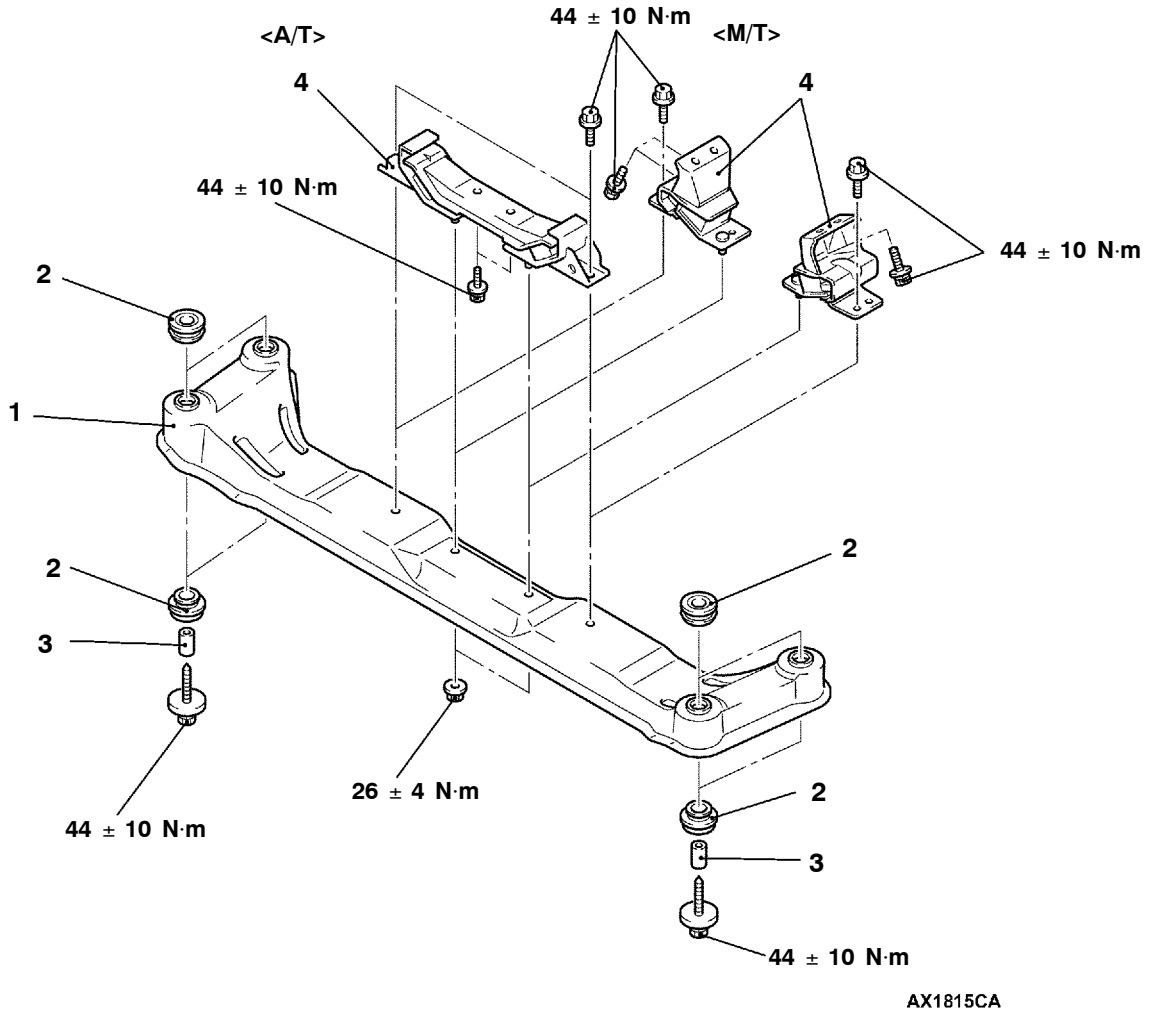


**Removal steps**

1. Transmission mounting center member assembly
2. Transmission mounting bush
3. Collar
4. Transmission mounting insulator assembly

## INSPECTION

- Check the transmission mounting insulator for cracks, separation or deformation.
- Check the transmission mounting center member for cracks or damage.

Purchased from www.WorkshopManuals.co.uk

www.WorkshopManuals.co.uk

# No.1 CROSSMEMBER

## REMOVAL AND INSTALLATION

**Caution**

1. **Before removing the steering wheel and airbag module assembly, always refer to GROUP 52B - Service Precautions, Airbag Module and Clock Spring. Also, set the front wheels so that they are facing straight forward, and remove the ignition key. If you fail to do this, the SRS clock spring will be damaged, causing the SRS airbag to be inoperative and serious injury.**
2. ***: Indicates parts which should be initially tightened, and then fully tightened after placing the vehicle horizontally and loading the full weight of the engine on the vehicle body.**

**Pre-removal Operation**
- Under Cover Removal
- Drive Shaft Removal (Refer to GROUP 26.)
- Differential Carrier and No.2 Crossmember Assembly Removal (Refer to GROUP 26 - Freewheel Assembly and Differential Carrier.)
- Upper Arm Removal (Refer to GROUP 33A.)
- Lower Arm Removal (Refer to GROUP 33A.)
- Stabilizer Bar Removal (Refer to GROUP 33A.)
- Engine Oil Cooler Removal<6G7> (Refer to GROUP 12.)
- Air Cleaner Removal<4M4> (Refer to GROUP 15.)
- Intercooler Removal<4M4> (Refer to GROUP 15.)
- Engine Cover Removal (Refer to GROUP 11A - Timing Belt.)
- Radiator Removal (Refer to GROUP 14.)
- Power Steering Fluid Draining (Refer to GROUP 37A - On-vehicle Service.)

**Post-installation Operations**
- Differential Carrier and No.2 Crossmember Assembly Installation (Refer to GROUP 26 - Freewheel Assembly and Differential Carrier.)
- Drive Shaft Installation (Refer to GROUP 26.)
- Lower Arm Installation (Refer to GROUP 33A.)
- Upper Arm Installation (Refer to GROUP 33A.)
- Stabilizer Bar Installation (Refer to GROUP 33A.)
- Air Cleaner Installation<4M4> (Refer to GROUP 15.)
- Intercooler Installation<4M4> (Refer to GROUP 15.)
- Radiator Installation (Refer to GROUP 14.)
- Engine Oil Cooler Installation (Refer to GROUP 12.)
- Power Steering Fluid Supplying (Refer to GROUP 37A - On-vehicle Service.)
- Power Steering Fluid Line Bleeding (Refer to GROUP 37A - On-vehicle Service.)
- Press the dust cover with a finger to check whether the dust cover is cracked or damaged.
- Checking Steering Wheel Position with Wheels Straight Ahead
- Front Wheel Alignment Check and Adjustment (Refer to GROUP 37A - On-vehicle Service.)
- Under Cover Installation
- Engine Cover Installation (Refer to GROUP 11A - Timing Belt.)

Purchased from www.WorkshopManuals.co.uk

www.WorkshopManuals.co.uk

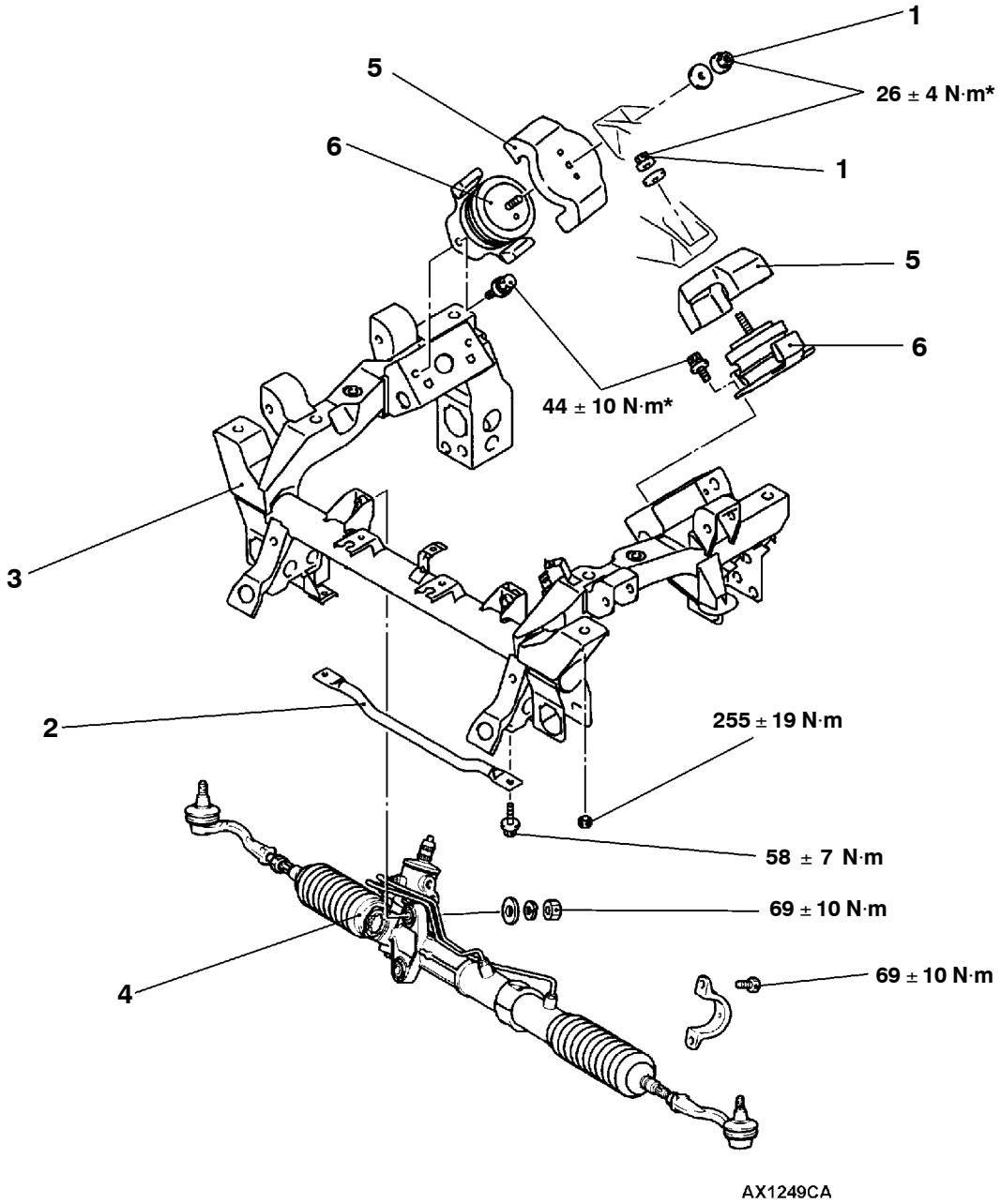


**Removal steps**

◀A▶ 1. Engine mounting nuts
2. Front reinforcement bar
◀B▶ 3. No.1 crossmember assembly
4. Power steering gear and linkage
5. Engine mounting stopper
6. Engine mounting

Purchased from www.WorkshopManuals.co.uk

www.WorkshopManuals.co.uk

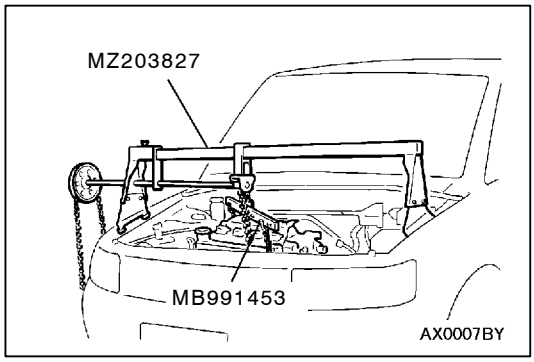


## REMOVAL SERVICE POINTS

### ◀A▶ ENGINE MOUNTING NUT REMOVAL

1. Use the special tool to support the engine.
2. Remove the engine mount mounting nuts.

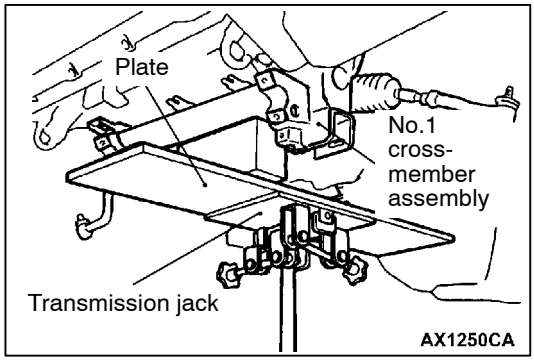


### ◀B▶No.1 CROSSMEMBER ASSEMBLY REMOVAL

Use a transmission jack to support the No.1 crossmember and remove the No.1 crossmember.

## INSPECTION

- Check the No.1 crossmember for cracks and damage.

Purchased from www.WorkshopManuals.co.uk

www.WorkshopManuals.co.uk

**NOTES**

Purchased from www.WorkshopManuals.co.uk

www.WorkshopManuals.co.uk

# FRONT SUSPENSION

**Click on the applicable bookmark to selected the required model year.**

Purchased from www.WorkshopManuals.co.uk

www.WorkshopManuals.co.uk


# FRONT SUSPENSION

## CONTENTS

GENERAL INFORMATION . . . . . 1
SERVICE SPECIFICATIONS . . . . . 3
SPECIAL TOOLS . . . . . 3
ON-VEHICLE SERVICE . . . . . 4
Wheel Alignment Check and Adjustment . . . . . 4
Ball Joint Dust Cover Check . . . . . 6
UPPER ARM ASSEMBLY . . . . . 7
SHOCK ABSORBER ASSEMBLY . . . . . 10
LOWER ARM ASSEMBLY . . . . . 13
STABILIZER BAR . . . . . 16

Purchased from www.WorkshopManuals.co.uk

www.WorkshopManuals.co.uk

# GENERAL INFORMATION

A coil spring-type double wishbone independent-type suspension has been adopted as the front suspension. This type of suspension is rigid, has very little variation in roll centre height and provides excellent riding comfort, making it ideal for cross-country vehicles.

## COIL SPRING

| Item | Short wheelbase-2500,3500, Long wheelbase -2500 (GL, GLX),3500 (GLX) | Short wheelbase-3200, Long wheelbase -2500 (GLS),3200,3500 (GLS) |
|---|---|---|
| Wire diameter × average diameter × free length mm | 16 × 109 × 322 | 16 × 109 × 327 |

## CONSTRUCTION DIAGRAM

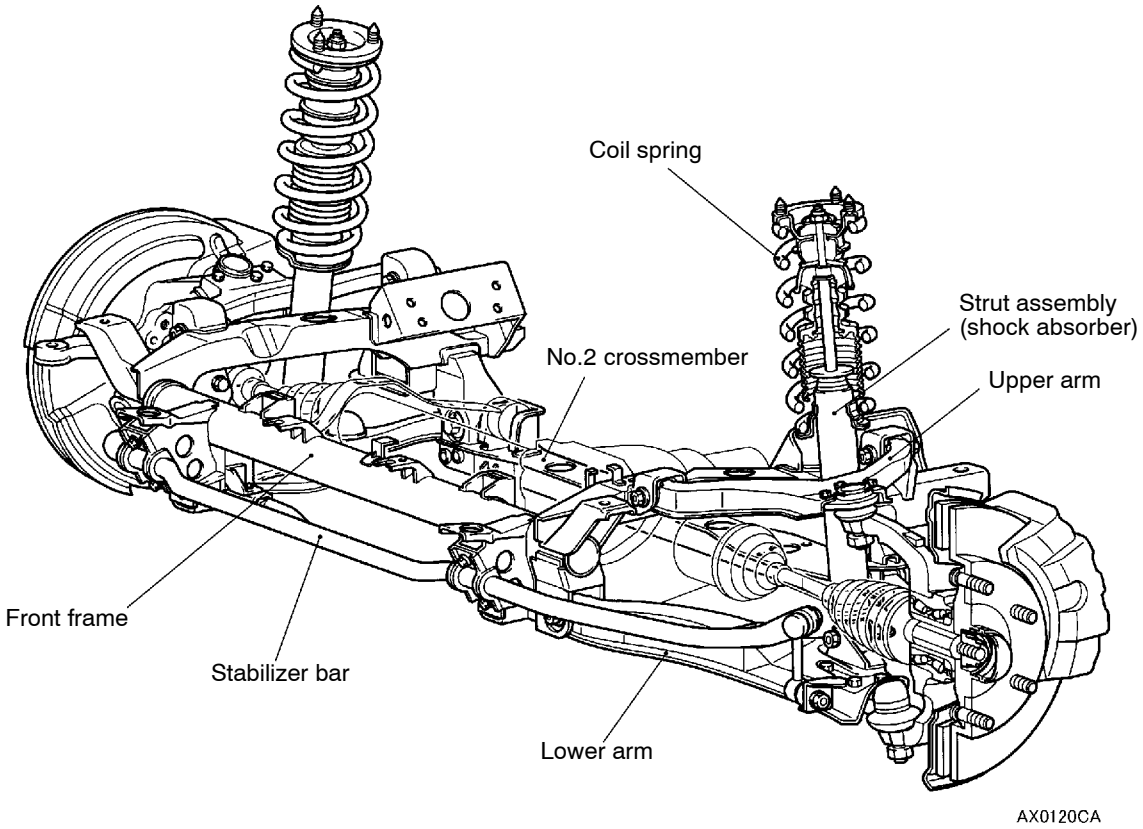


Purchased from www.WorkshopManuals.co.uk

www.WorkshopManuals.co.uk

# SERVICE SPECIFICATIONS

| Items | | Standard value |
|---|---|---|
| Toe-in | At the centre of tyre tread mm | 2.5 ± 2.5 |
| | Toe-angle (per wheel) | 0° 05' ± 05' |
| Toe-out angle on turns (inner wheel when outer wheel at 20°) | | 21°48' |
| Camber | | 0°30' ± 30'* |
| Caster | | 3°50' ± 1°* |
| Side slip mm (per 1 m) | | 0 ± 3 |
| Kingpin inclination | | 11°30' |
| Upper arm ball joint rotation torque N·m | | 0.4 - 2.5 |
| Lower arm ball joint rotation torque N·m | | 0.3 - 4.5 |
| Stabilizer link ball joint turning torque N·m | | 0.5 - 2.0 |

NOTE
*: difference between right and left wheels: less than 30'

# SPECIAL TOOLS

| Tools | Number | Name | Use |
|---|---|---|---|
| 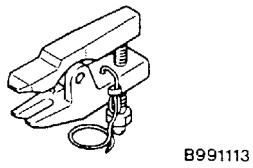 B991113 | MB990635, MB991113 or MB991406 | Steering linkage puller | Ball joint and knuckle disconnection |
| 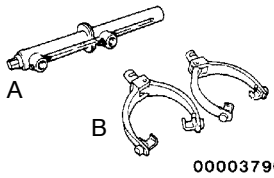 A B 00003796 | A: MB991237<br>B: MB991238 | A: Spring compressor body<br>B: Arm set | Coil spring compression |
| 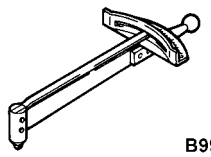 B990968 | MB990968 | Torque wrench | Upper arm ball joint, lower arm ball joint and stabilizer link ball joint rotation starting torque measurement |
| 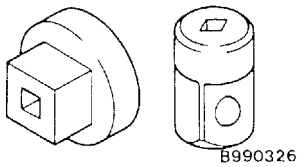 B990326 | MB990326 | Preload socket | |

Purchased from www.WorkshopManuals.co.uk

www.WorkshopManuals.co.uk

| Tools | Number | Name | Use |
|---|---|---|---|
| 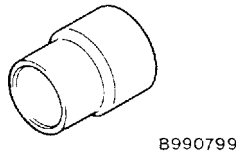  | MB990799 | Ball joint remover & installer | Lower arm ball joint dust cover press-in |

# ON-VEHICLE SERVICE

## WHEEL ALIGNMENT CHECK AND ADJUSTMENT

Measure the wheel alignment with the vehicle parked on a level surface.
The front suspension, steering system, and wheels should be serviced to normal condition prior to measurement of wheel alignment.

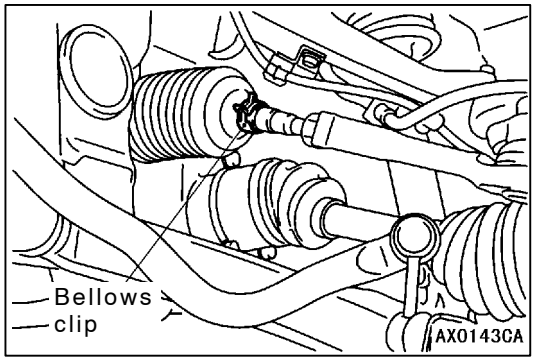


### TOE-IN

**Standard value:**
**At the centre of tyre tread 2.5 ± 2.5 mm**
**Toe angle (per wheel) 0°05' ± 05'**

1. Adjust the toe-in by undoing the clip and turning the left and right tie rod turnbuckles by the same amount (in opposite directions).

   NOTE
   The toe will move out as the left turnbuckle is turned toward the front of the vehicle and the right turnbuckle is turned toward the rear of the vehicle.

2. Use a turning radius gauge to check that the steering angle is at the standard value.
   (Refer to GROUP 37A - On-vehicle Service.)

### TOE-OUT ANGLE ON TURNS

To check the steering linkage, especially after the vehicle has been involved in an accident or if an accident is presumed, it is advisable to check the toe-out angle on turns in addition to the wheel alignment.
Conduct this test on the left turn as well as on the right turn.

**Standard value (inner wheel when outer wheel at 20°): 21°48'**

Purchased from www.WorkshopManuals.co.uk

www.WorkshopManuals.co.uk

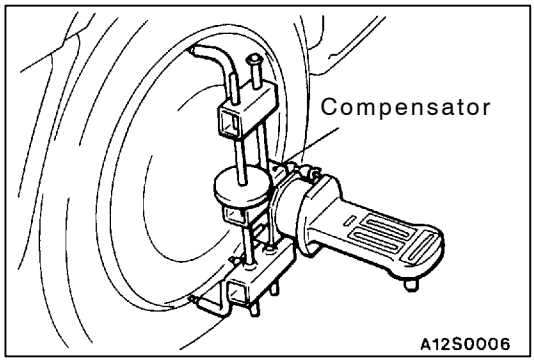


**CAMBER, CASTER AND KINGPIN INCLINATION**

**Standard value:**

**Camber 0°30' ± 30' (difference between right and left wheel: less than 30')**

**Caster 3°50' ± 1°(difference between right and left wheel: less than 30')**

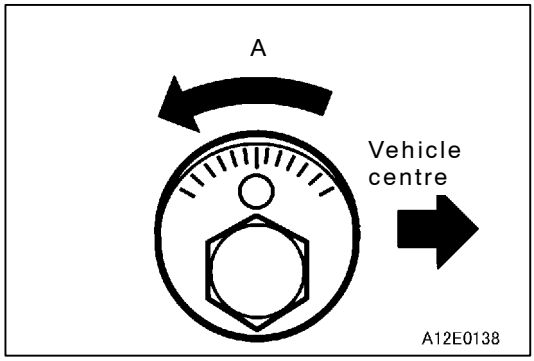


If camber or caster are not within the standard value, adjust by following procedures.

1. Adjust the camber and caster by turning the camber adjusting bolt of the lower arm. For the standard value, refer to the camber and caster adjusting table (P.33A-5).
2. After adjusting the camber, the toe should be adjusted.

## Camber And Caster Adjusting Table

HOW TO READ
(EXAMPLE)
Compare the measurement value with the standard value. When the camber is -0°35' and caster is 0°18', turn the front adjusting cam by 1.5 graduations to the direction opposite to "A" and the rear adjusting cam by 2.5 graduations to the "A" direction.

NOTE
Solid lines show caster, broken lines shows camber.

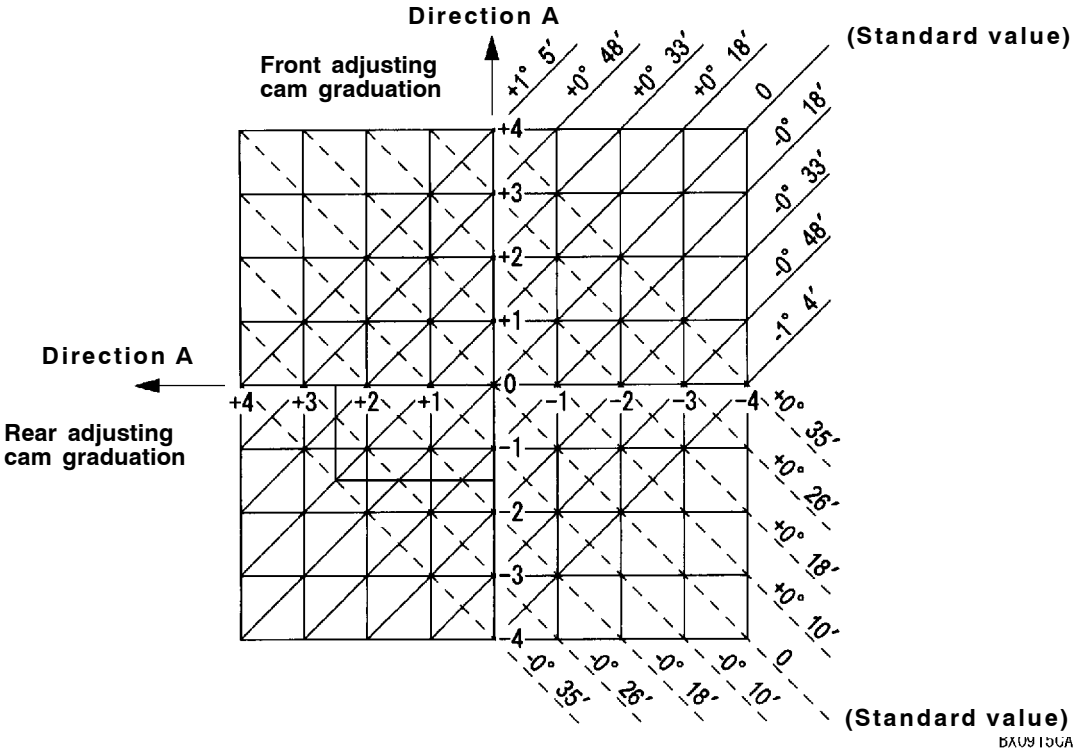


Purchased from www.WorkshopManuals.co.uk

www.WorkshopManuals.co.uk

**SIDE SLIP**

Measure the side slip with a side slip tester.

**Standard value: 0 ± 3 mm**

## BALL JOINT DUST COVER CHECK

1. Check the dust cover for cracks or damage by pushing it with finger.
2. If the dust cover is cracked or damaged, replace the lower arm assembly or stabilizer link.

   NOTE
   Cracks or damage of the dust cover may cause damage of the ball joint.

Purchased from www.WorkshopManuals.co.uk

www.WorkshopManuals.co.uk

# UPPER ARM ASSEMBLY

## REMOVAL AND INSTALLATION

**Caution**

***: To prevent bushings from breakage, the parts indicated by * should be temporarily tightened, and then fully tightened with the vehicle on the ground in the unladen condition.**

**Post-installation Operation**
- Check the dust cover for cracks or damage by pushing it with finger.
- Wheel alignment check and adjustment (Refer to P.33A-4.)

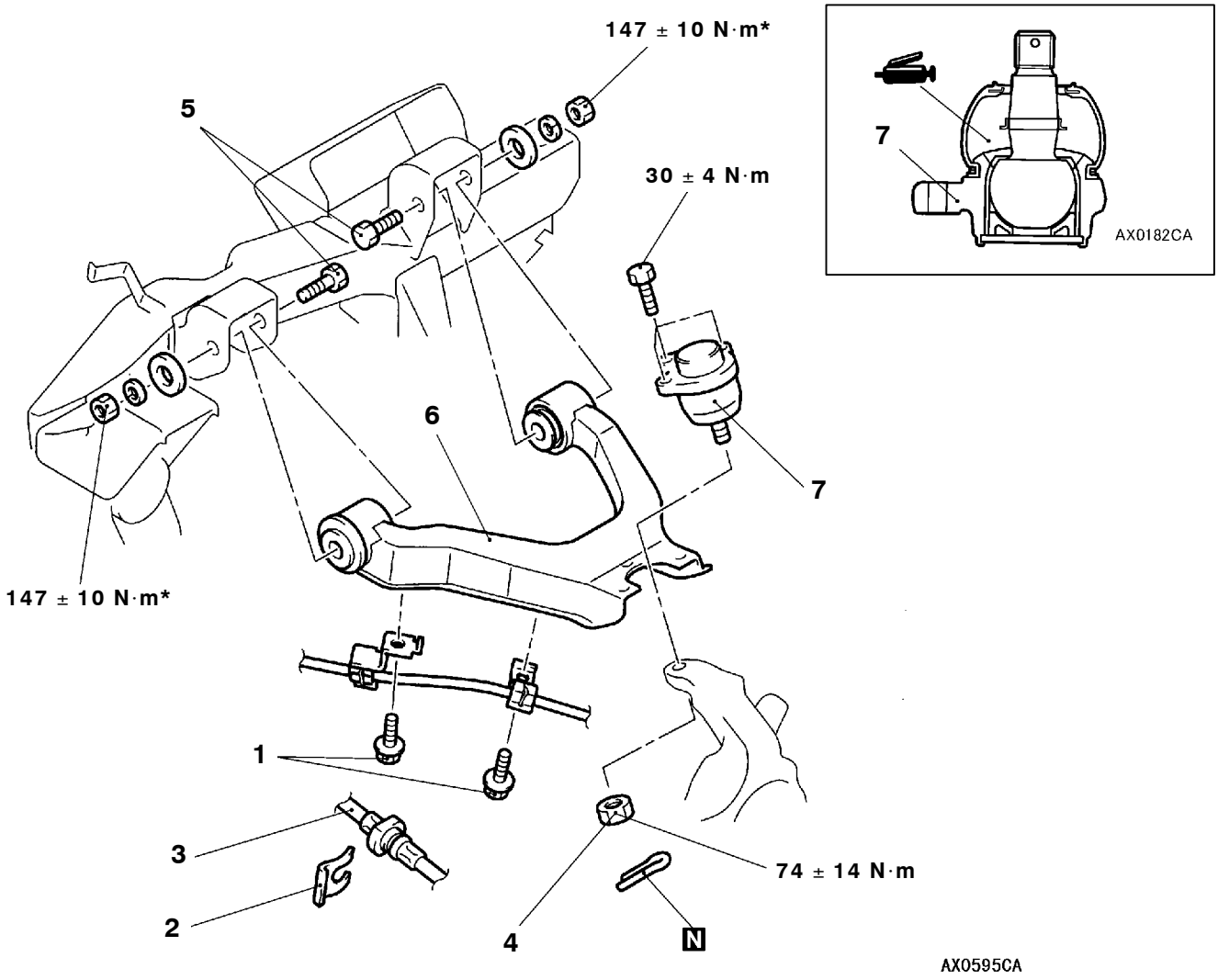


**Removal steps**

1. Front wheel speed sensor bracket mounting bolt <Vehicles with ABS>
2. Clip
3. Brake hose
4. Upper arm assembly and knuckle connection ◀A▶
5. Upper arm assembly and front frame connection
6. Upper arm assembly
7. Upper arm ball joint assembly

Purchased from www.WorkshopManuals.co.uk

www.WorkshopManuals.co.uk

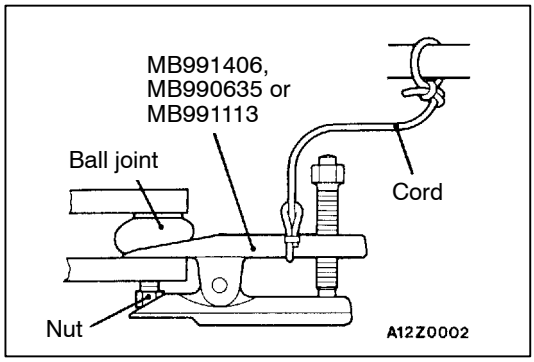


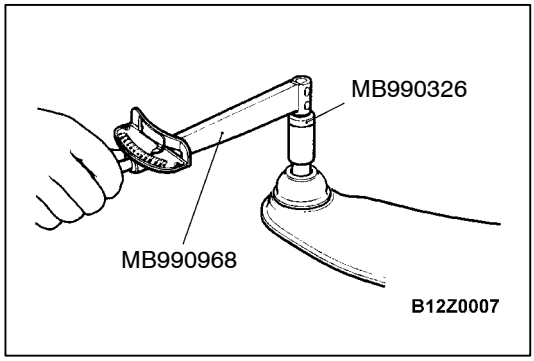


## REMOVAL SERVICE POINT

### ◀A▶ UPPER ARM BALL JOINT AND KNUCKLE DISCONNECTION

**Caution**

1. **To prevent the ball joint thread from damage, only loosen but do not remove the nut securing the upper arm to the knuckle from the ball joint and use the special tool.**
2. **Support the special tool with a cord to prevent it from coming off.**

## INSPECTION

### UPPER ARM BALL JOINT ROTATION TORQUE CHECK

1. After shaking the upper arm ball joint stud several times, use the special tool to measure the rotation torque of the upper arm ball joint.

   **Standard value: 0.4 - 2.5 N·m**

2. When the measured value exceeds the standard value, replace the upper arm ball joint assembly.
3. When the measured value is lower than the standard value, check that the upper arm ball joint turns smoothly without excessive play. If there is no excessive play, the ball joint can be reused.

### UPPER ARM BALL JOINT DUST COVER CHECK

1. Check the dust cover for cracks or damage by pushing it with finger.
2. If the dust cover is cracked or damaged, replace the upper arm assembly.

   NOTE
   Cracks or damage of the dust cover may cause damage of the ball joint. When it is damaged during service work, replace the dust cover.

Purchased from www.WorkshopManuals.co.uk

www.WorkshopManuals.co.uk

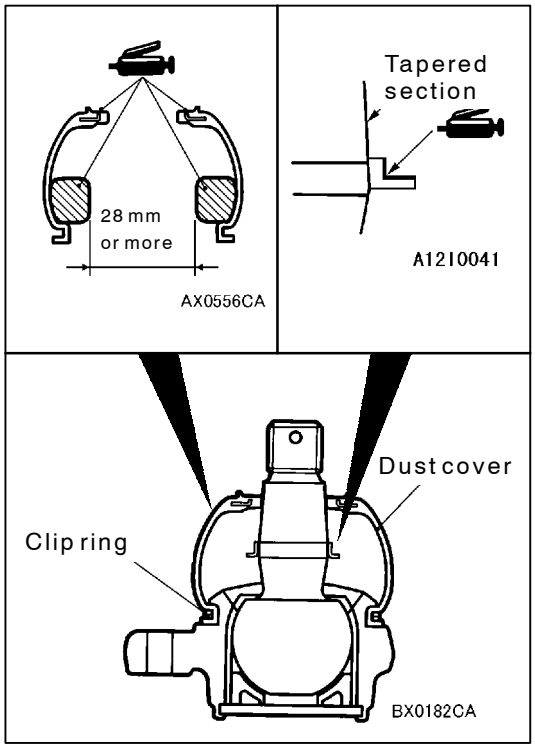


## UPPER ARM BALL JOINT DUST COVER REPLACEMENT

Only when the dust cover is damaged accidentally during service work, replace the dust cover as follows:

1. Remove the clip ring, and then remove the dust cover.
2. Fill the inside of the dust cover with the specified grease as shown in the illustration.
3. Apply the specified grease to the dust cover and ball joint stud as shown in the illustration.
4. Wrap plastic tape around the upper arm ball joint stud, and then install the dust cover to the upper arm ball joint.

   **Caution**
   **Do not apply grease to the place (tapered section) where the threaded section of the ball joint connects with the knuckle. Wipe the grease off if it is applied.**
5. Secure the dust cover in place with the clip ring.

   **Caution**
   **To prevent the grease to be applied on the ball joint connection (taper) with knuckle, do not compress the dust cover before installation.**
6. Press the dust cover with your finger to check that there are no cracks or damage in the dust cover.

Purchased from www.WorkshopManuals.co.uk

www.WorkshopManuals.co.uk

# SHOCK ABSORBER ASSEMBLY

## REMOVAL AND INSTALLATION

**Caution**

***: To prevent bushings from breakage, the parts indicated by * should be temporarily tightened, and then fully tightened with the vehicle on the ground in the unladen condition.**

**Pre-removal Operation**
- Upper Arm Assembly Removal (Refer to P.33A-7.)
- Battery and Battery Tray (LH) Removal
- Condense Tank (LH) Removal (Refer to GROUP 14 – Radiator.)
- Air Cleaner (RH) Removal (Refer to GROUP 15 – Air Cleaner.)

**Post-installation Operation**
- Air Cleaner Assembly (RH) (Refer to GROUP 15 – Air Cleaner.)
- Condense Tank (LH) Installation (Refer to GROUP 14 – Radiator.)
- Battery and Battery Tray (LH) Removal
- Upper Arm Assembly Installation (Refer to P.33A-7.)
- Wheel Alignment Check and Adjustment (Refer to P.33A-4.)

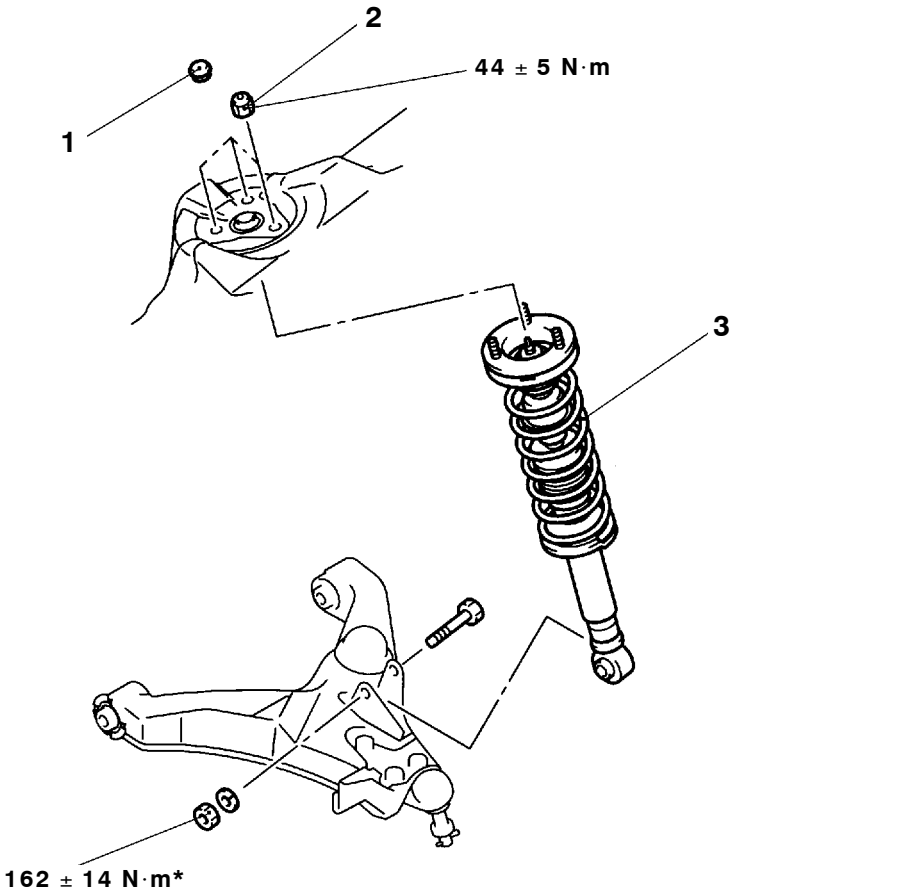


**Removal steps**

1. Cap
2. Shock absorber mounting nut
3. Shock absorber assembly

Purchased from www.WorkshopManuals.co.uk

www.WorkshopManuals.co.uk

## DISASSEMBLY AND REASSEMBLY

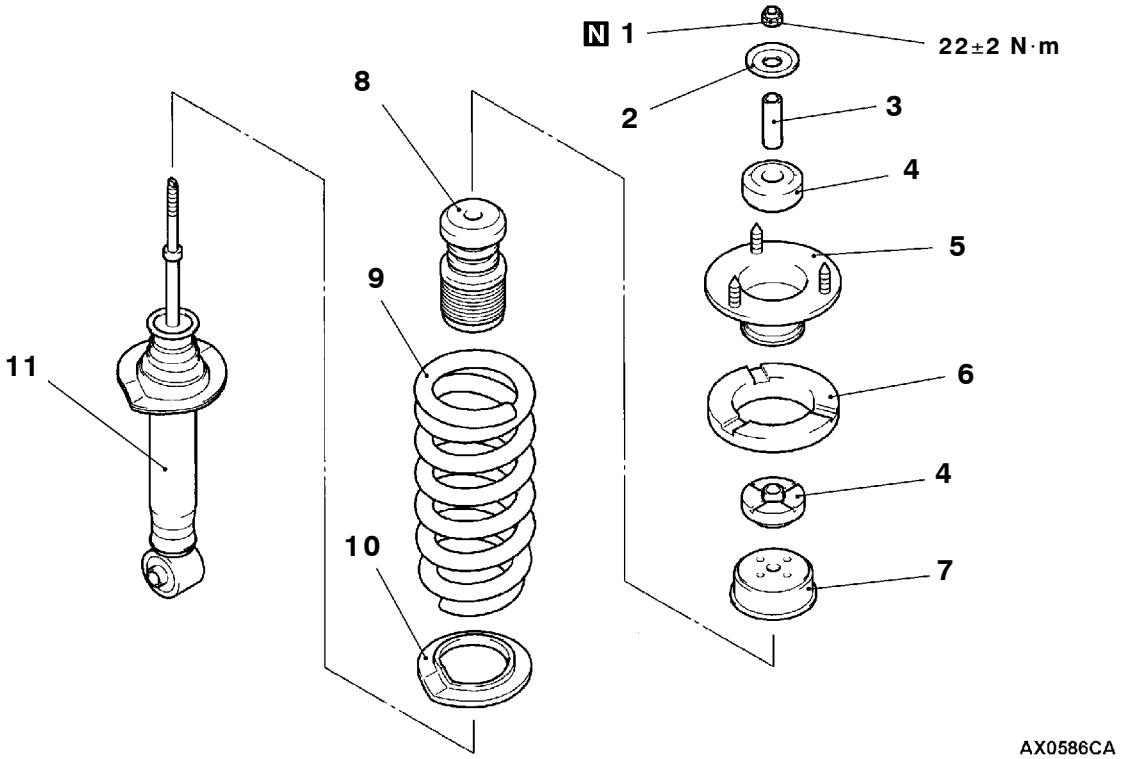


**Disassembly steps**

◀A▶ ▶C◀ 1. Self-locking nut
2. Seat
3. Collar
4. Upper bush
▶B◀ 5. Spring bracket assembly
6. Spring upper pad
7. Cup assembly
8. Helper rubber
▶A◀ 9. Coil spring
▶A◀ 10. Spring lower pad
11. Shock absorber assembly

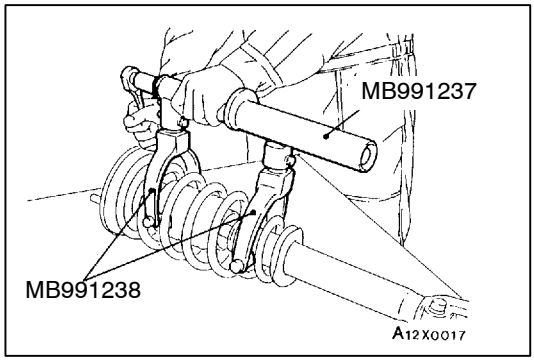


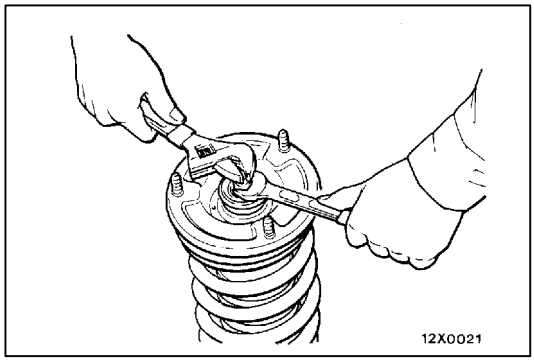


## DISASSEMBLY SERVICE POINT

### ◀A▶ SELF-LOCKING NUT REMOVAL

1. Use the special tools to compress the coil spring.

   **Caution**
   **(1) Do not tighten the special tool bolt too tight. The special tool will be broken if the allowable tightening torque of 74 N·m is exceed.**
   **(2) Install the special tools evenly, and so that the maximum length will be attained within the installation range.**
   **(3) Do not use an impact wrench as it will cause the bolt of the special tool to be seized.**

2. To prevent the piston rod from turning and unscrew the self-locking nut.

   **Caution**
   **To prevent the piston rod lock nut inside the strut from loosening, do not use an impact wrench when the locking nuts are loosened.**

Purchased from www.WorkshopManuals.co.uk

www.WorkshopManuals.co.uk

## REASSEMBLY SERVICE POINTS

### ▶A◀ SELF-LOCKING NUT INSTALLATION

1. Install the special tool same as its removal and compress the coil spring to install to the shock absorber.

   **Caution**
   **(1) Do not tighten the special tool bolt too tight. The special tool will be broken if the allowable tightening torque of 74 N·m is exceed.**
   **(2) Install the special tools evenly, and so that the maximum length will be attained within the installation range.**
   **(3) Do not use an impact wrench as it will cause the bolt of the special tool to be seized.**

2. Align the coil spring lower end and the stepped spring lower pad with the shock absorber spring seat stepped part.

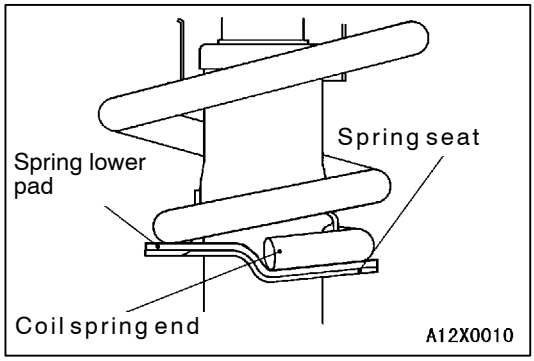


### ▶B◀ SPRING BRACKET ASSEMBLY INSTALLATION

Install the spring bracket assembly so that it faces as shown in respect to the shock absorber.

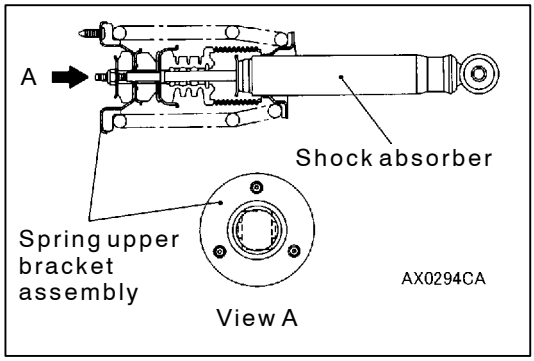


### ▶C◀ SELF-LOCKING NUT INSTALLATION

1. Tighten the self-locking nut loosely.
2. Remove the special tools (MB991237, MB991238) and then tighten the self-locking nut to the specified torque.

   **Caution**
   **Do not use an impact wrench as it will cause the bolt of the special tool to be seized.**

Purchased from www.WorkshopManuals.co.uk

www.WorkshopManuals.co.uk

# LOWER ARM ASSEMBLY

## REMOVAL AND INSTALLATION

**Caution**

***: To prevent bushings from breakage, the parts indicated by * should be temporarily tightened, and then fully tightened with the vehicle on the ground in the unladen condition.**

**Pre-removal Operation**
Drive Shaft Removal (Refer to GROUP 26 – Drive Shaft.)

**Post-installation Operation**
- Check the dust cover for cracks or damage by pushing it with finger.
- Drive Shaft Installation (Refer to GROUP 26 – Drive Shaft.)
- Wheel alignment check and adjustment (Refer to P.33A-4.)

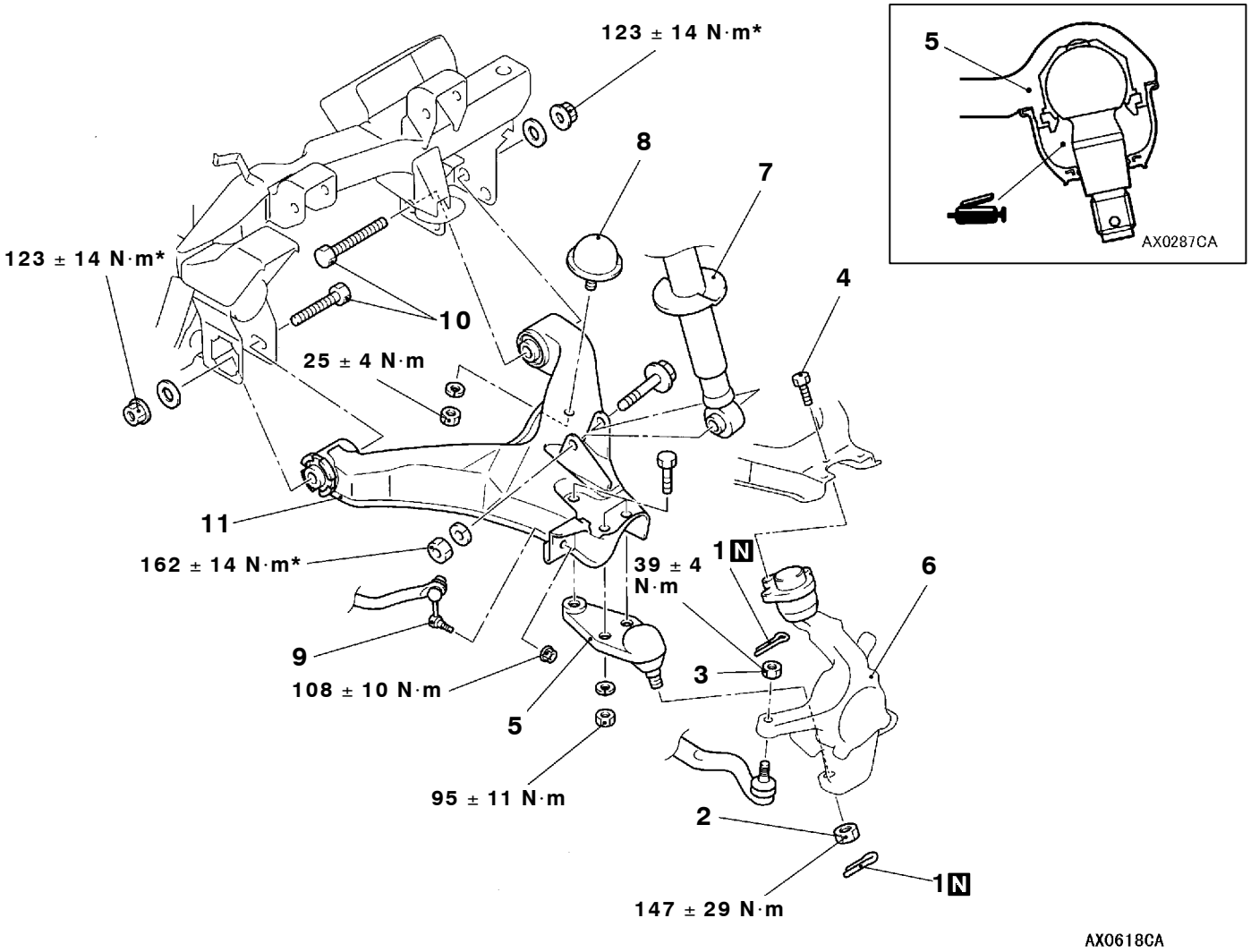


**Removal steps**

1. Split pin
2. Lower arm ball joint and knuckle assembly connection
3. ◀A▶ Tie rod end and knuckle connection
4. Upper arm and upper arm ball joint connection
5. ◀A▶ Lower arm ball joint
6. Hub and knuckle assembly
7. Shock absorber and lower arm assembly connection
8. Bump stopper
9. Lower arm assembly and stabilizer link connection
10. ◀B▶ Lower arm mounting bolt
11. Lower arm assembly

Purchased from www.WorkshopManuals.co.uk

www.WorkshopManuals.co.uk

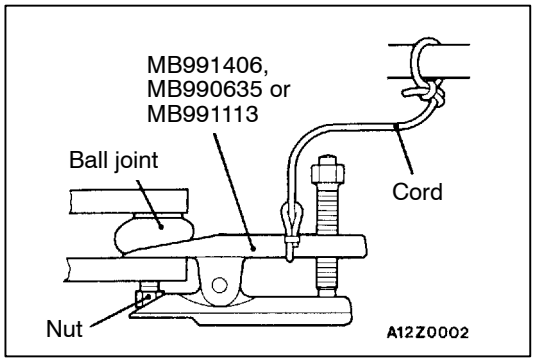


## REMOVAL SERVICE POINTS

### ◀A▶ TIE ROD END AND KNUCKLE SEPARATION/LOWER ARM BALL JOINT REMOVAL

**Caution**

1. **To prevent the ball joint thread from damage, only loosen but do not remove the nut securing the lower arm and tie rod end to the knuckle from the ball joint and use the special tool.**
2. **Support the special tool with a cord to prevent it from coming off.**

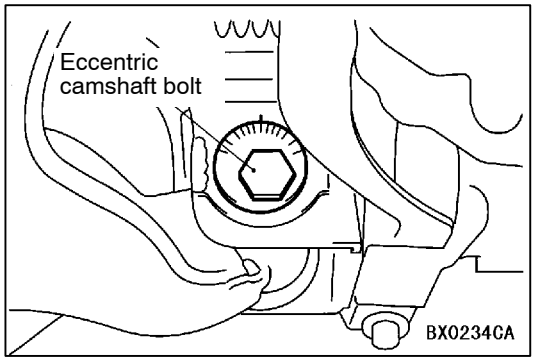


### ◀B▶ LOWER ARM MOUNTING BOLT REMOVAL

After making the alignment mark on the bracket and eccentric cam bolt and remove them.

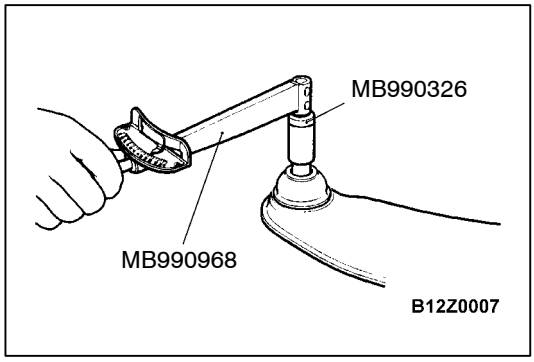


## INSPECTION

### LOWER ARM BALL JOINT ROTATION STARTING TORQUE CHECK

1. After shaking the ball joint stud several times, use the special tools to measure the rotation starting torque of the lower ball joint.

   **Standard value: 0.3 - 4.5 N·m**

2. When the measured value exceeds the standard value, replace the lower arm ball joint assembly.
3. When the measured value is lower than the standard value, check that the lower arm ball joint turns smoothly without excessive play. If there is no excessive play, the ball joint can be reused.

### LOWER ARM BALL JOINT DUST COVER CHECK

1. Check the dust cover for cracks or damage by pushing it with finger.
2. If the dust cover is cracked or damaged, replace the lower arm ball joint assembly.

Purchased from www.WorkshopManuals.co.uk

www.WorkshopManuals.co.uk

NOTE
If the dust cover is cracked or damaged, it is possible that there may also be damage to the ball joint.
When it is damaged during service work, replace the dust cover.

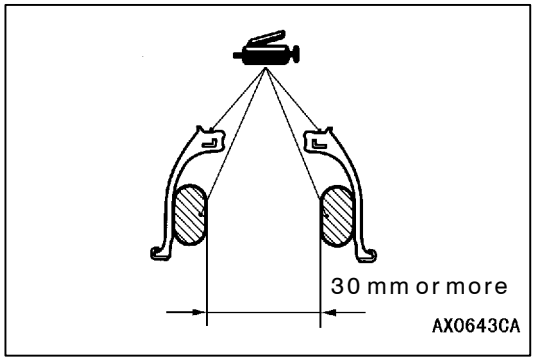


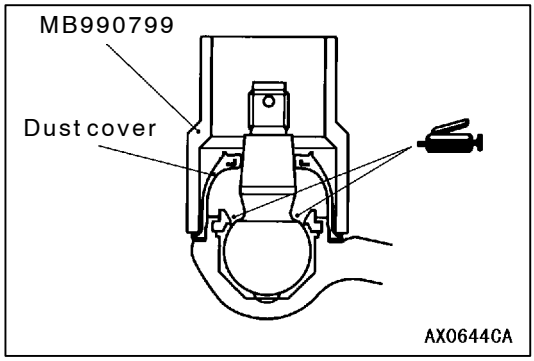


## LOWER ARM BALL JOINT DUST COVER REPLACEMENT

Only when the dust cover is damaged accidentally during service work, replace the dust cover as follows:

1. Remove the dust cover.
2. Fill the inside of the dust cover with the specified grease as shown in the illustration.
3. Apply the specified grease to the dust cover and ball joint stud as shown in the illustration.
4. Wrap plastic tape around the lower arm ball joint stud, and then install the dust cover to the lower arm ball joint.

   **Caution**
   **Do not apply grease to the place (tapered section) where the threaded section of the ball joint connects with the knuckle. Wipe the grease off if it is applied.**
5. Using the special tool, drive the dust cover into the position shown in the illustration.

   **Caution**
   **To prevent the grease to be applied on the ball joint connection (taper) with knuckle, do not compress the dust cover before installation.**
6. Press the dust cover with your finger to check that there are no cracks or damage in the dust cover.

Purchased from www.WorkshopManuals.co.uk

www.WorkshopManuals.co.uk

# STABILIZER BAR

## REMOVAL AND INSTALLATION

**Pre-removal Operation**
Under Cover Removal

**Post-installation Operation**
- Check the Dust Cover for Cracks or Damage by Pushing it with Finger.
- Under Cover Installation

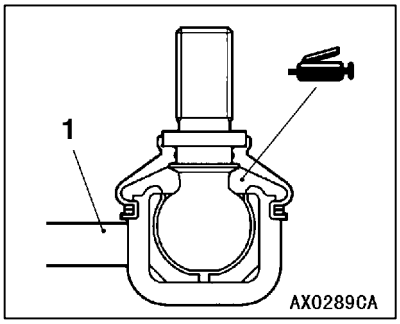


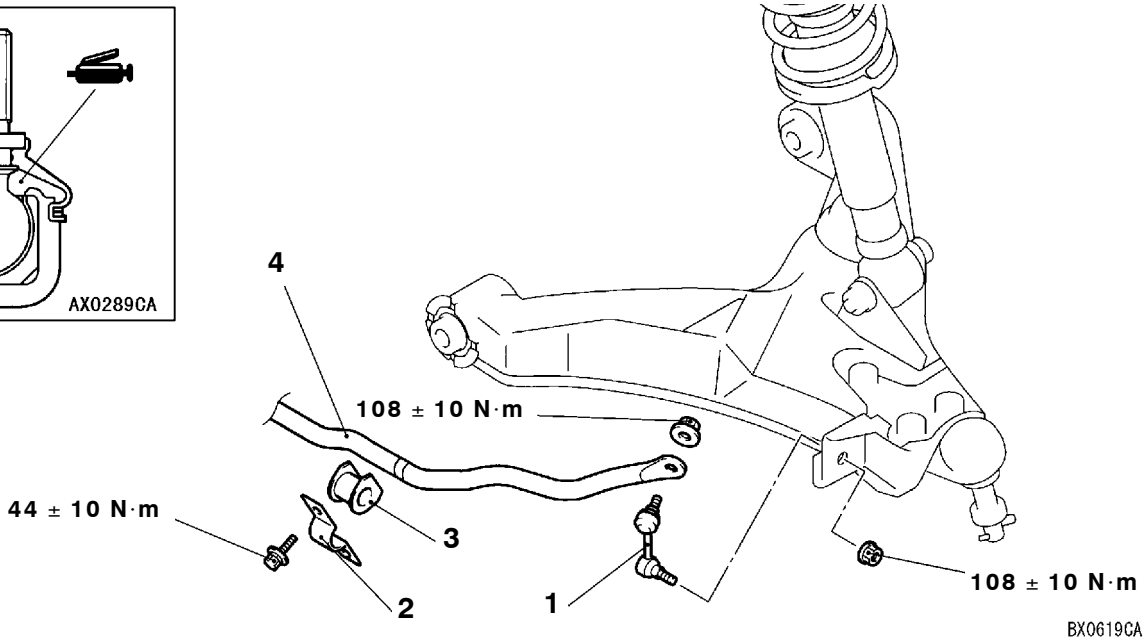


**Removal steps**
1. Stabilizer link
▶B◀ 2. Stabilizer clamp
▶A◀ 3. Stabilizer bush
4. Stabilizer bar

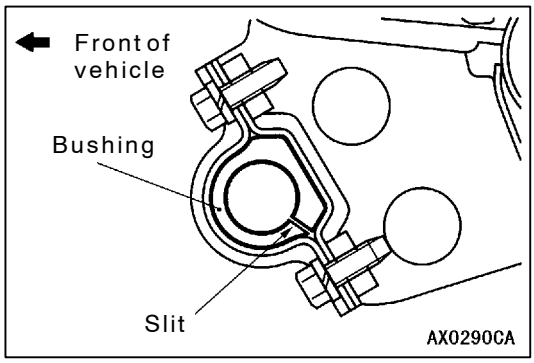


## INSTALLATION SERVICE POINTS

### ▶A◀ STABILIZER BUSHING INSTALLATION

Install the bush slit as shown in the illustration.

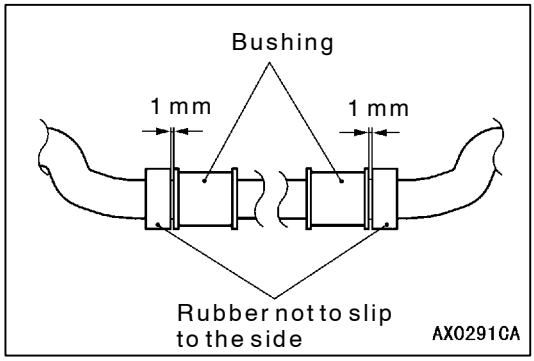


### ▶B◀ STABILIZER CLAMP INSTALLATION

Position the stabilizer clamp as shown in the illustration and then tighten the stabilizer clamp mounting bolt.

Purchased from www.WorkshopManuals.co.uk

www.WorkshopManuals.co.uk

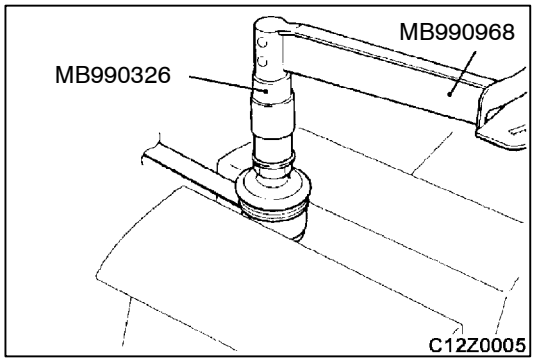


## INSPECTION

### STABILIZER LINK BALL JOINT TURNING TORQUE CHECK

1. After shaking the ball joint stud several times, install the nut to the stud and use the special tools to measure the turning torque of the ball joint.

   **Standard value: 0.5 - 2.0 N·m**

2. When the measured value exceeds the standard value, replace the stabilizer link.
3. When the measured value is lower than the standard value, check that the ball joint turns smoothly without excessive play. If so, it is possible to reuse that ball joint.

### STABILIZER LINK BALL JOINT DUST COVER CHECK

1. Check the dust cover for cracks or damage by pushing it with finger.
2. If the dust cover is cracked or damaged, replace the stabilizer link.

   NOTE
   Cracks or damage of the dust cover may cause damage of the ball joint. When it is damaged during service work, replace the dust cover.

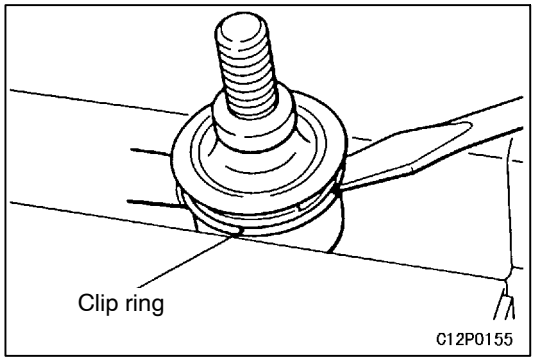


## STABILIZER LINK BALL JOINT DUST COVER REPLACEMENT

Only when the dust cover is damaged accidentally during service work, replace the dust cover as follows:

1. Remove the clip ring and the dust cover.
2. Apply multipurpose grease to the inside of the dust cover.
3. Wrap plastic tape around the stabilizer link stud, and then install the dust cover to the stabilizer link.
4. Secure the dust cover by the clip ring.
5. Check the dust cover for cracks or damage by pushing it with finger.

Purchased from www.WorkshopManuals.co.uk

www.WorkshopManuals.co.uk

**NOTES**

Purchased from www.WorkshopManuals.co.uk

www.WorkshopManuals.co.uk

# REAR SUSPENSION

**Click on the applicable bookmark to selected the required model year.**

Purchased from www.WorkshopManuals.co.uk

www.WorkshopManuals.co.uk


# REAR SUSPENSION

## CONTENTS

GENERAL INFORMATION . . . . . 2
SERVICE SPECIFICATIONS . . . . . 3
SPECIAL TOOLS . . . . . 3
ON-VEHICLE SERVICE . . . . . 4
Wheel Alignment Check and Adjustment . . . . . 4
Ball Joint Dust Cover Check . . . . . 5
UPPER ARM ASSEMBLY . . . . . 6
SHOCK ABSORBER/COIL SPRING/LOWER ARM ASSEMBLY . . . . . 9
STABILIZER BAR . . . . . 11
TOE CONTROL ARM ASSEMBLY/TOE CONTROL TOWER BAR . . . . . 13
TRAILING ARM ASSEMBLY . . . . . 16

Purchased from www.WorkshopManuals.co.uk

www.WorkshopManuals.co.uk

# GENERAL INFORMATION

A multi-link type double wishbone independent suspension has been adopted as the rear suspension. Because the left and right wheels move independently with almost no change in tyre posture, the tyres contact the ground firmly, providing excellent steering stability as well as offering improved riding comfort.

## COIL SPRING

| Items | Short wheelbase-2500(GL) | Except short wheelbase-2500(GL) | Long wheelbase |
|---|---|---|---|
| Wire diameter × outer diameter × free length mm | 16 × 133 × 330 | 16 × 134 × 336 | 18 × 134 × 337 |

## CONSTRUCTION DIAGRAM

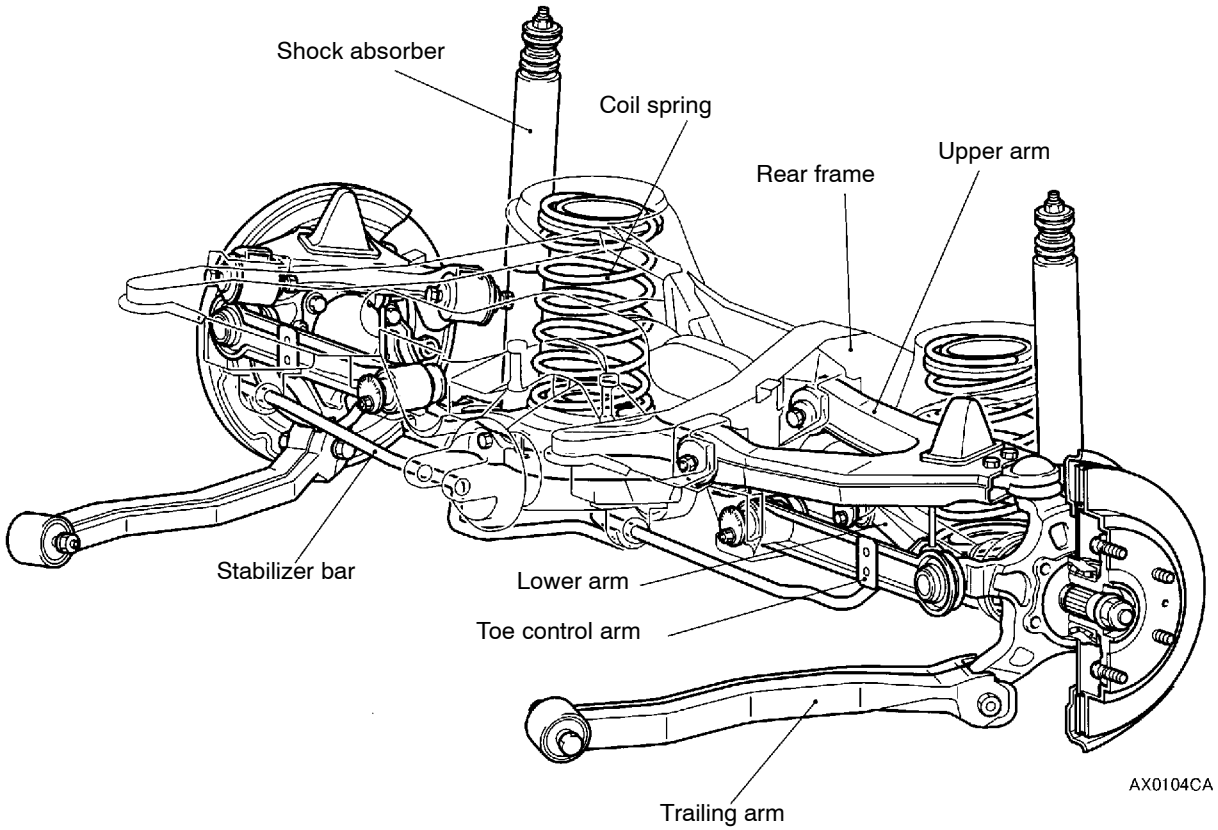


Purchased from www.WorkshopManuals.co.uk

www.WorkshopManuals.co.uk

# SERVICE SPECIFICATIONS

| Items | | Standard value |
|---|---|---|
| Toe-in | At the centre of tyre tread mm | 3 ± 3 |
| | Toe-angle (per wheel) | 1° 06' ± 1° 06' |
| Camber | | 0° ± 30'* |
| Thrust angle | | 0° ± 9' |
| Upper arm ball joint rotation torque N·m | | 0.5 - 3.0 |
| Stabilizer link ball joint turning torque N·m | | 0.5 - 2.0 |
| Toe control arm ball joint turning torque N·m | | 1.0 - 2.5 |

NOTE
*: difference between right and left wheels: less than 30'

# SPECIAL TOOLS

| Tool | Number | Name | Use |
|---|---|---|---|
| 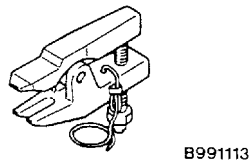 B991113 | MB990635, MB991113 or MB991406 | Steering linkage puller | Ball joint and knuckle disconnection |
| 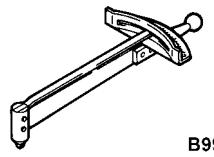 B990968 | MB990968 | Torque wrench | Upper arm ball joint, lower arm ball joint and stabilizer link ball joint rotation starting torque measurement |
| 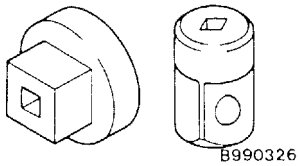 B990326 | MB990326 | Preload socket | |
| 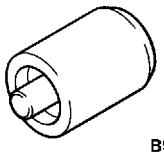 B990880 | MB990881 | Rear suspension bushing arbor | Lower arm bushing removal and press-fitting |
| 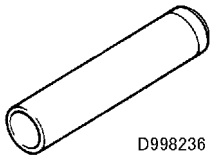 D998236 | MD998236 | Output shaft bearing installer | Trailing arm bushing removal and press-fitting |
| 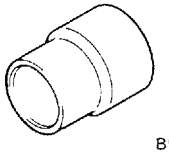 B990799 | MB990799 | Ball joint remover and installer | Upper arm ball joint dust cover press-in |

Purchased from www.WorkshopManuals.co.uk

www.WorkshopManuals.co.uk

| Tool | Number | Name | Use |
|---|---|---|---|
| 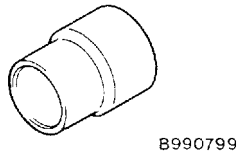 B990799 | MB990800 | Ball joint remover and installer | Toe control arm ball joint dust cover press-in |

# ON-VEHICLE SERVICE

## WHEEL ALIGNMENT CHECK AND ADJUSTMENT

1. The rear suspension, wheels and tyres should be serviced to normal condition prior to measurement of wheel alignment.
2. Measure the wheel alignment with the vehicle parked on a level surface.

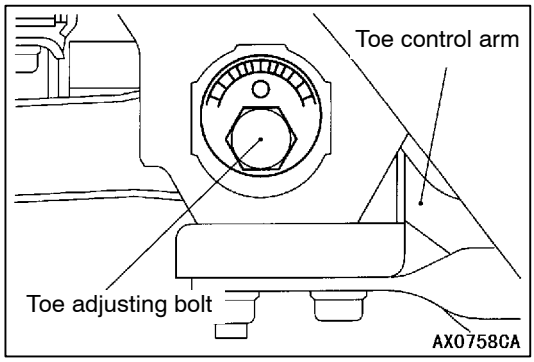


### TOE-IN

**Standard value:**

**At the centre of tyre tread 3 ± 3 mm**
**Toe angle (per wheel) 1°06' ± 1°06'**

If toe-in is not within the standard value, adjust by following procedures.

(1) Be sure to adjust the camber before making toe adjustment.
(2) Carry out adjustment by turning the toe adjusting bolt (toe control arm mounting bolt which faces the inside of the body).

**Left wheel: Turning clockwise (-) toe-in**

**Right wheel: Turning clockwise (+) toe-in**

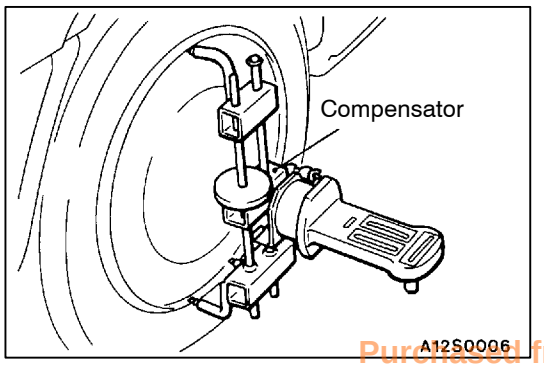


### CAMBER

Use the compensator to measure camber.

**Standard value:**

**Camber 0° ± 30' (difference between right and left wheel: less than 30')**

Purchased from www.WorkshopManuals.co.uk

www.WorkshopManuals.co.uk

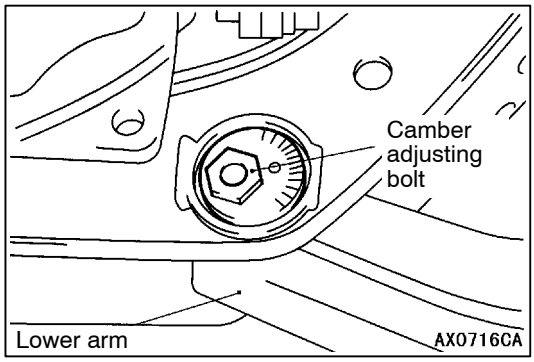


If camber is not within the standard value, adjust by following procedures.

(1) Carry out adjustment by turning the camber adjusting bolt of the lower arm.

**Left wheel: Turning clockwise (-) camber**

**Right wheel: Turning clockwise (+) camber**

(2) After adjusting the camber, the toe should be adjusted.

## BALL JOINT DUST COVER CHECK

1. Check the dust cover for cracks or damage by pushing it with finger.
2. If the dust cover is cracked or damaged, replace the upper arm ball joint assembly, toe control arm ball joint assembly or the stabilizer link.

   NOTE
   Cracks or damage of the dust cover may cause damage of the ball joint.

Purchased from www.WorkshopManuals.co.uk

www.WorkshopManuals.co.uk

# UPPER ARM ASSEMBLY

## REMOVAL AND INSTALLATION

**Pre-removal Operations**
Brake Fluid Draining

**Post-installation Operations**
- Press the dust cover with your finger to check that there are no cracks or damage in the dust cover.
- Brake Fluid Supplying and Bleeding (Refer to GROUP 35A – On-vehicle Service.)
- Wheel Alignment Check and Adjustment (Refer to P.34-4.)

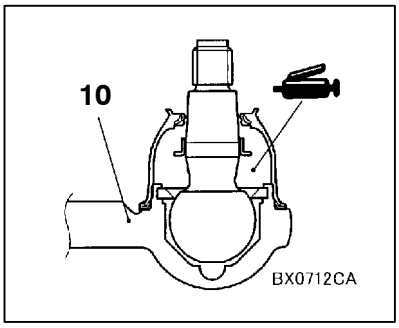


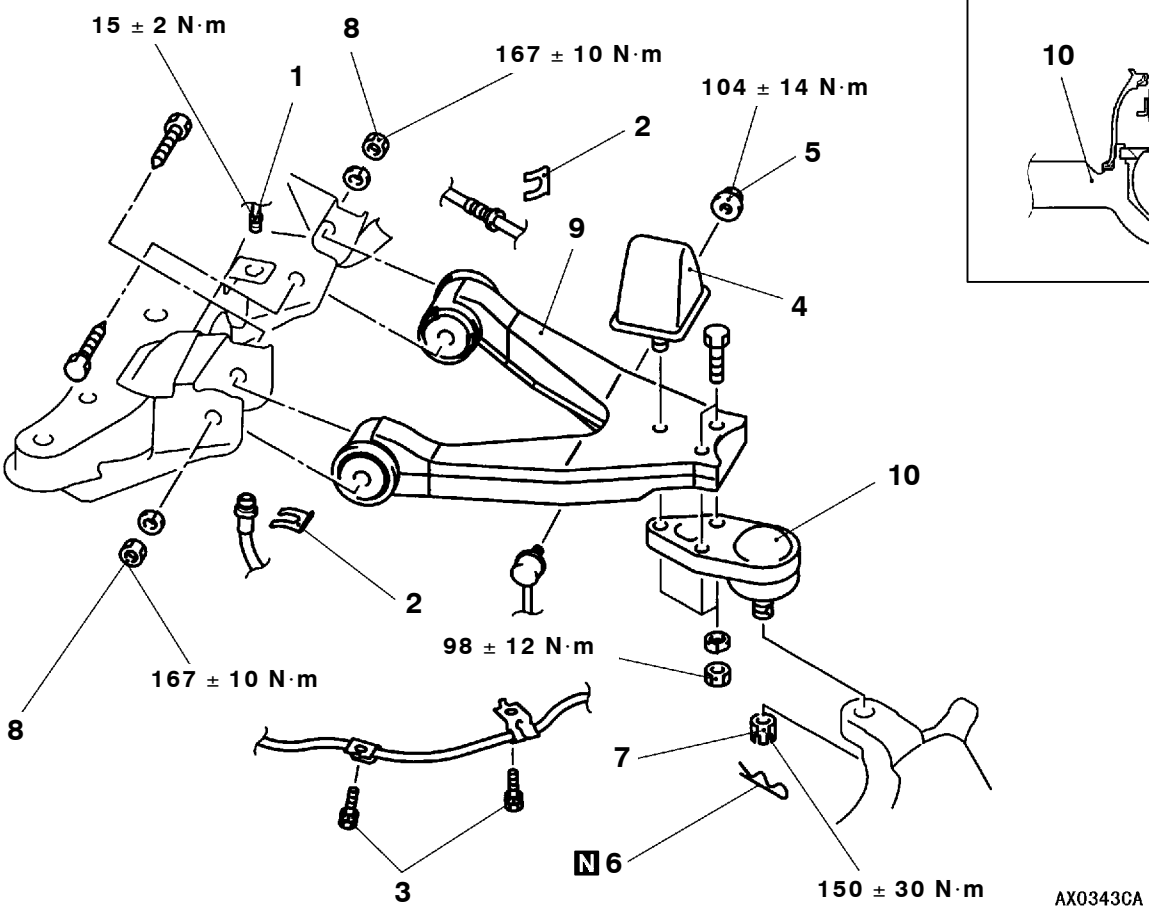


**Removal steps**

1. Brake pipe connection
2. Clip
3. Rear wheel speed sensor and upper arm assembly connection <vehicles with ABS>
4. Bump stopper
5. Stabilizer link and upper arm assembly connection.
6. Split pin
7. Upper arm ball joint and knuckle connection
8. Upper arm assembly and rear frame connection
9. Upper arm
10. Upper arm ball joint

◀A▶

◀B▶ ▶A◀

Purchased from www.WorkshopManuals.co.uk

www.WorkshopManuals.co.uk

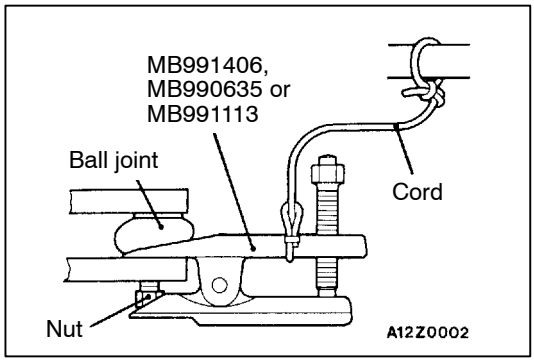


## REMOVAL SERVICE POINTS

### ◀A▶ UPPER ARM BALL JOINT AND KNUCKLE DISCONNECTION

**Caution**

1. **To prevent the ball joint thread from damage, only loosen but do not remove the nut securing the upper arm to the knuckle from the ball joint and use the special tool.**
2. **The special tool should be suspended from a cord to prevent it from being dropped.**

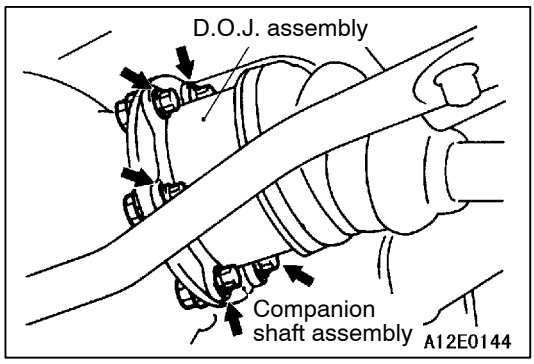


### ◀B▶ UPPER ARM ASSEMBLY AND REAR FRAME DISCONNECTION

Disconnect the connection of the D.O.J. assembly and the companion shaft assembly.

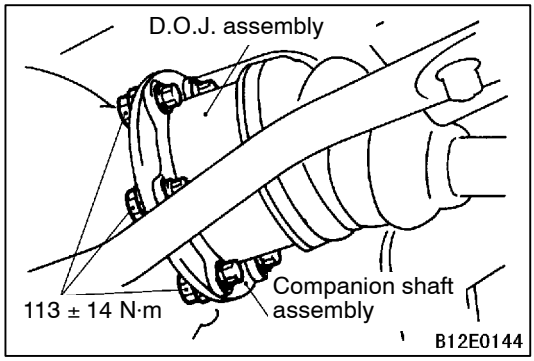


## INSTALLATION SERVICE POINT

### ▶A◀ UPPER ARM ASSEMBLY AND REAR FRAME CONNECTION

After installing the upper arm mounting bolt, tighten the connecting bolt of the D.O.J. assembly and the companion shaft assembly to the specified torque.

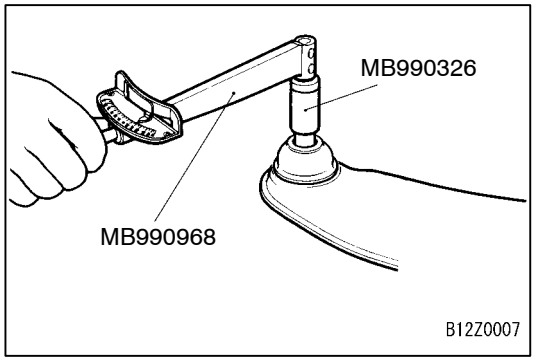


## INSPECTION

### UPPER ARM BALL JOINT ROTATION TORQUE CHECK

1. After shaking the upper arm ball joint stud several times, use the special tool to measure the rotation torque of the upper arm ball joint.

   **Standard value: 0.5 – 3.0 N·m**
2. When the measured value exceeds the standard value, replace the upper arm ball joint assembly.
3. When the measured value is lower than the standard value, check that the upper arm ball joint turns smoothly without excessive play. If there is no excessive play, the ball joint can be reused.

Purchased from www.WorkshopManuals.co.uk

www.WorkshopManuals.co.uk

### UPPER ARM BALL JOINT DUST COVER CHECK

1. Check the dust cover for cracks or damage by pushing it with finger.
2. If the dust cover is cracked or damaged, replace the upper arm assembly.

   NOTE
   Cracks or damage of the dust cover may cause damage of the ball joint. When it is damaged during service work, replace the dust cover.

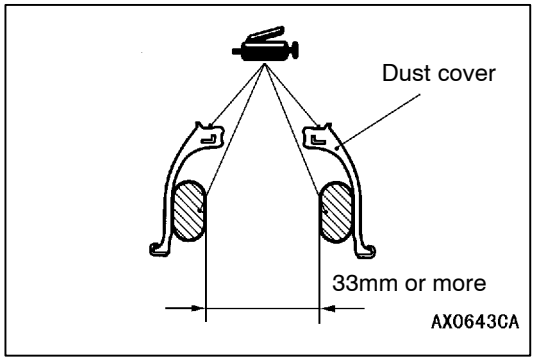


## UPPER ARM BALL JOINT DUST COVER REPLACEMENT

Only when the dust cover is damaged accidentally during service work, replace the dust cover as follows:

1. Remove the dust cover.
2. Fill the inside of the dust cover with the specified grease as shown in the illustration.
3. Apply the specified grease to the dust cover and ball joint stud as shown in the illustration.
4. Wrap plastic tape around the lower arm ball joint stud, and then install the dust cover to the upper arm ball joint.

   **Caution**

   **Do not apply grease to the place (tapered section) where the threaded section of the ball joint connects with the knuckle. Wipe away any grease which gets on this section.**

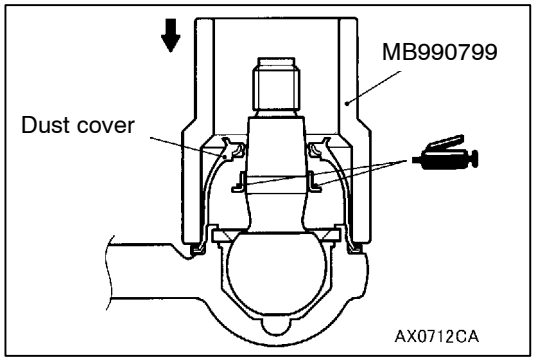


5. Using the special tool, drive the dust cover into the position shown in the illustration.

   **Caution**

   **To prevent the grease to be applied on the ball joint connection (taper) with knuckle, do not compress the dust cover before installation.**

6. Press the dust cover with your finger to check that there are no cracks or damage in the dust cover.

Purchased from www.WorkshopManuals.co.uk

www.WorkshopManuals.co.uk

# SHOCK ABSORBER/COIL SPRING/LOWER ARM ASSEMBLY

## REMOVAL AND INSTALLATION

**Caution**

***: To prevent bushings from breakage, the parts indicated by * should be temporarily tightened, and then fully tightened with the vehicle on the ground in the unladen condition.**

**Post-installation Operation**
Wheel Alignment Check And Adjustment
(P.34-4.)

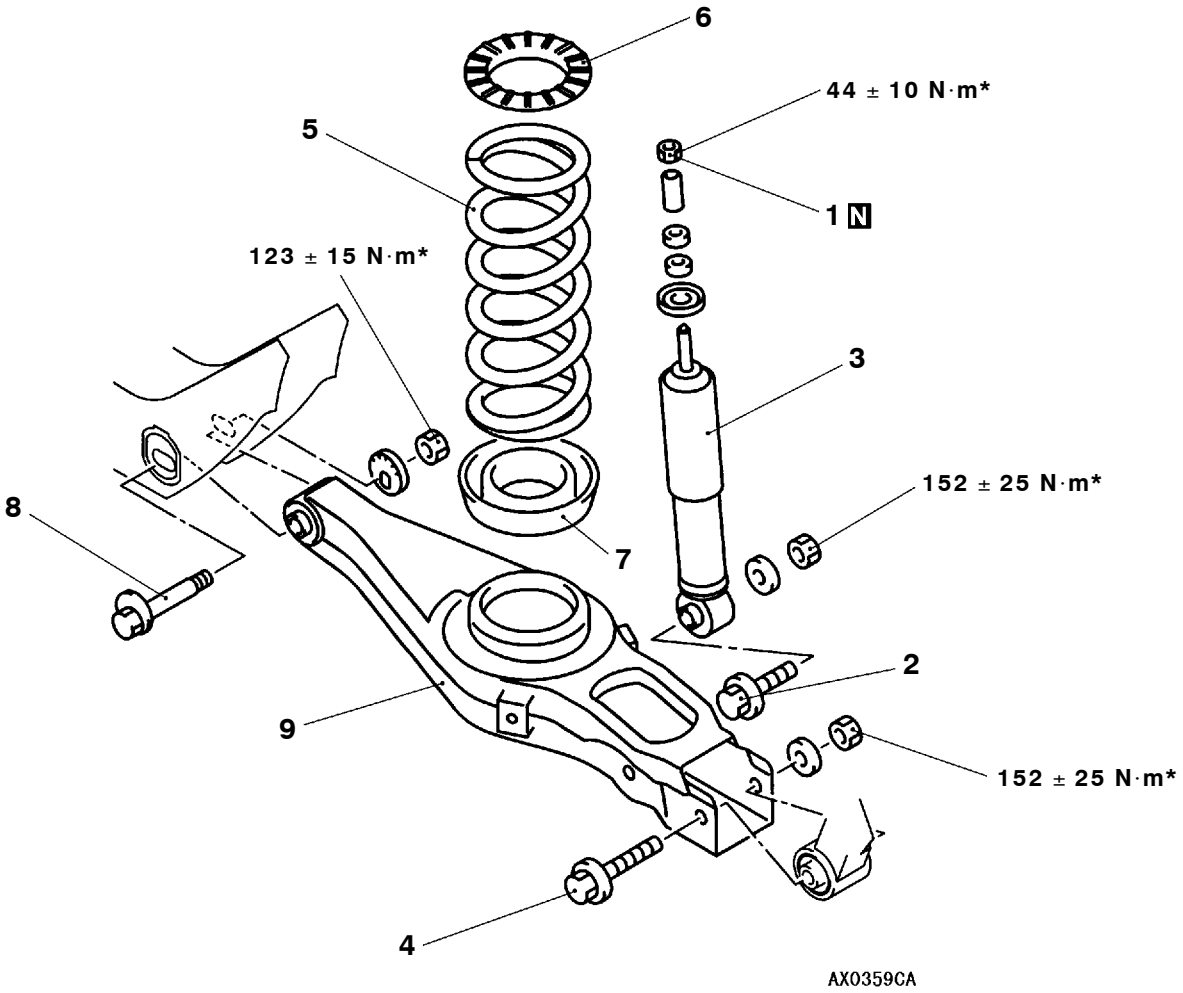


**Shock absorber removal steps**

1. Shock absorber mounting nut
2. Shock absorber mounting bolt
3. Shock absorber

**Coil spring removal steps**

◀A▶ ▶A◀ 2. Shock absorber mounting bolt
4. Lower arm mounting bolt
▶A◀ 5. Coil spring
6. Spring upper pad
7. Spring lower pad

**Lower arm removal steps**

2. Shock absorber mounting bolt
◀A▶ ▶A◀ 4. Lower arm mounting bolt
▶A◀ 5. Coil spring
6. Spring upper pad
7. Spring lower pad
◀B▶ 8. Bolt assembly (for camber adjustment)
9. Lower arm

Purchased from www.WorkshopManuals.co.uk

www.WorkshopManuals.co.uk

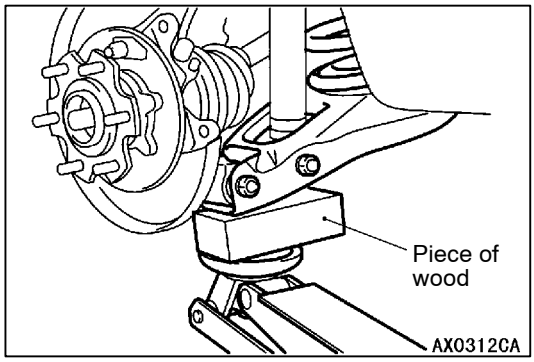


## REMOVAL SERVICE POINTS

### ◀A▶ LOWER ARM MOUNTING BOLT REMOVAL

1. Place a piece of wood at the lower arm as shown in the illustration. Using the floor jack, compress the coil spring to remove the lower arm mounting bolt.
2. Lower the floor jack slowly, and then remove the coil spring.

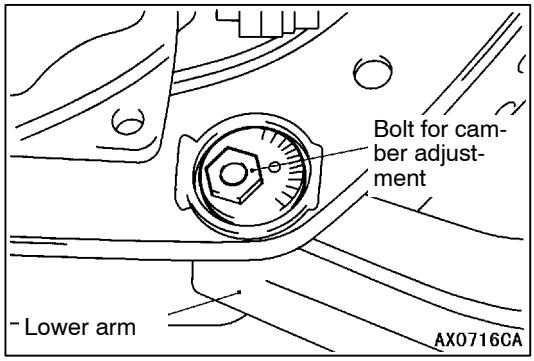


### ◀B▶ BOLT ASSEMBLY (FOR CAMBER ADJUSTMENT) REMOVAL

Make the mating marks to the bracket and the camber adjusting bolt, and then remove the camber adjusting bolt.

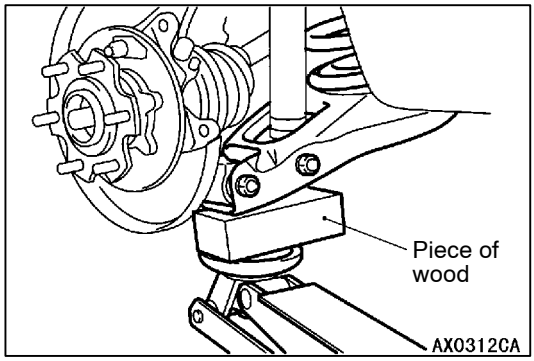


## INSTALLATION SERVICE POINT

### ▶A◀ COIL SPRING/LOWER ARM MOUNTING BOLT INSTALLATION

1. The identification colour of the coil spring should be located at the lower side.
2. Align the coil spring end with the spring lower pad cavity.
3. Place a piece of wood at the lower arm as shown in the illustration. Using the floor jack, compress the coil spring to remove the lower arm mounting bolt.

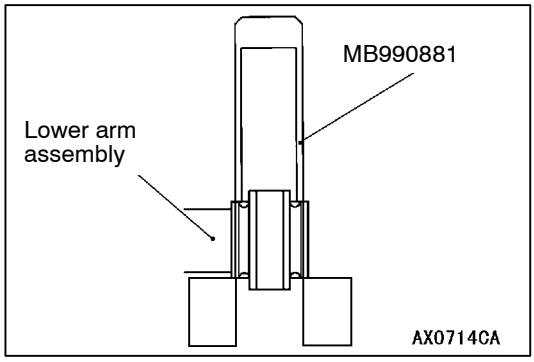


## BUSHING REPLACEMENT

Use the special tool to drive out and press fit the lower arm bushing.

Purchased from www.WorkshopManuals.co.uk

www.WorkshopManuals.co.uk

# STABILIZER BAR

## REMOVAL AND INSTALLATION

**Post-installation Operations**
Press the dust cover with your finger to check that there are no cracks or damage in the dust cover.

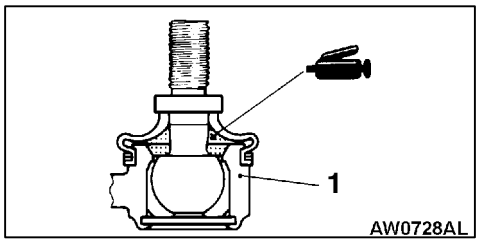


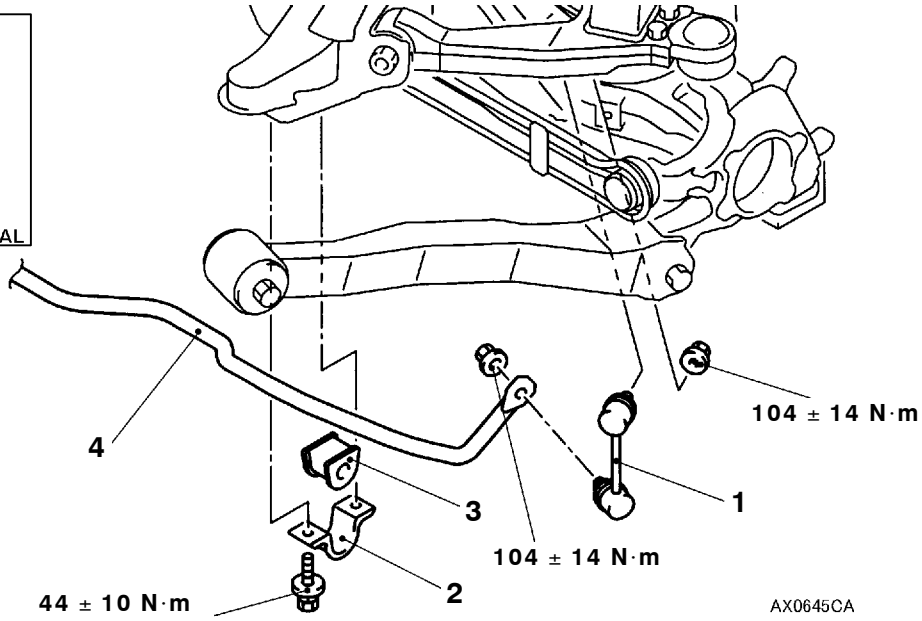


**Removal steps**

1. Stabilizer link assembly
2. Stabilizer clamp
3. ▶A◀ Bushing
4. Stabilizer bar

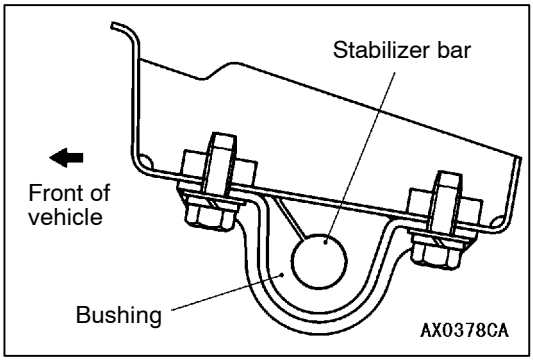


## INSTALLATION SERVICE POINT

### ▶A◀ BUSHING INSTALLATION

1. Install the stabilizer bar so that its identification mark faces the left side of the vehicle.
2. Install the bushing so that its slit faces the direction shown in the illustration.

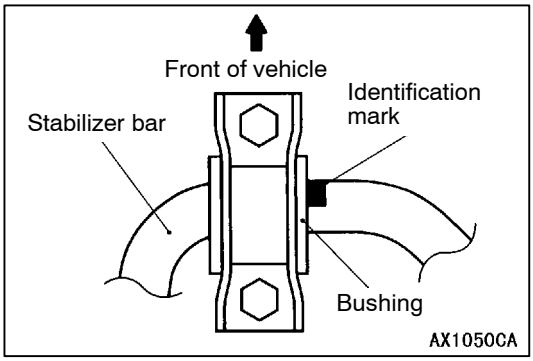


3. Align the end of the identification mark with the end of the bushing, before tightening the mounting screws.

Purchased from www.WorkshopManuals.co.uk

www.WorkshopManuals.co.uk

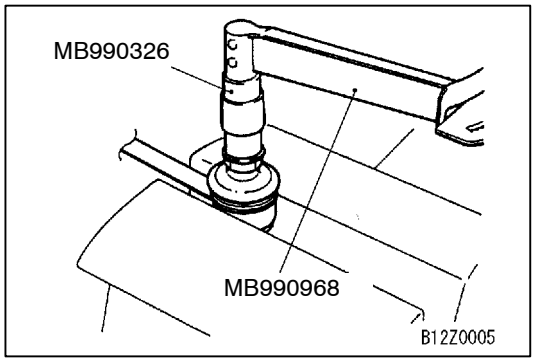


## INSPECTION

### STABILIZER LINK BALL JOINT TURNING TORQUE CHECK

1. After shaking the ball joint stud several times, install the nut to the stud and use the special tools to measure the turning torque of the ball joint.

   **Standard value: 0.5 - 2.0 N·m**

2. When the measured value exceeds the standard value, replace the stabilizer link.
3. When the measured value is lower than the standard value, check that the ball joint turns smoothly without excessive play. If so, it is possible to reuse that ball joint.

### STABILIZER LINK BALL JOINT DUST COVER CHECK

1. Check the dust cover for cracks or damage by pushing it with finger.
2. If the dust cover is cracked or damaged, replace the stabilizer link.

   NOTE
   Cracks or damage of the dust cover may cause damage of the ball joint. When it is damaged during service work, replace the dust cover.

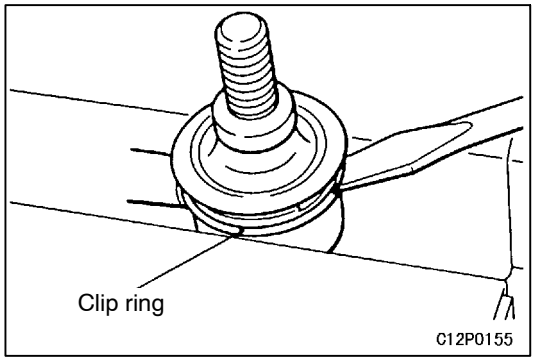


## STABILIZER LINK BALL JOINT DUST COVER REPLACEMENT

Only when the dust cover is damaged accidentally during service work, replace the dust cover as follows:

1. Remove the clip ring and the dust cover.
2. Apply multipurpose grease to the inside of the dust cover.
3. Wrap plastic tape around the stabilizer link stud, and then install the dust cover to the stabilizer link.
4. Secure the dust cover by the clip ring.
5. Check the dust cover for cracks or damage by pushing it with finger.

Purchased from www.WorkshopManuals.co.uk

www.WorkshopManuals.co.uk

# TOE CONTROL ARM ASSEMBLY/TOE CONTROL TOWER BAR

## REMOVAL AND INSTALLATION

**Caution**

***: To prevent bushings from breakage, the parts indicated by * should be temporarily tightened, and then fully tightened with the vehicle on the ground in the unladen condition.**

**Post-installation Operations**
- Press the dust cover with your finger to check that there are no cracks or damage in the dust cover.
- Wheel alignment check and adjustment (Refer to P.34-4.)

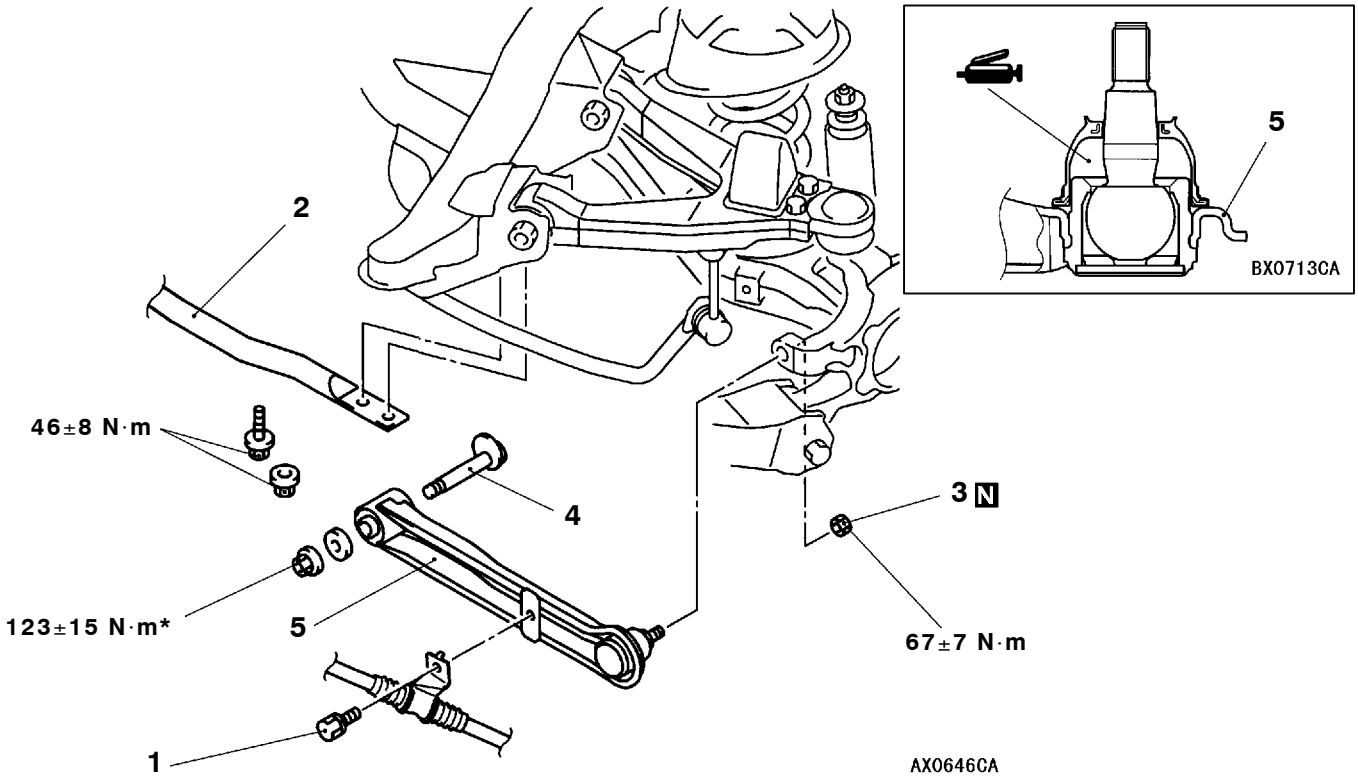


**Removal steps**

1. Parking brake cable mounting bolt
2. Toe control tower bar
3. Toe control arm ball joint and knuckle connection ◀A▶
4. Bolt assembly (for toe adjustment) ◀B▶
5. Toe control arm assembly

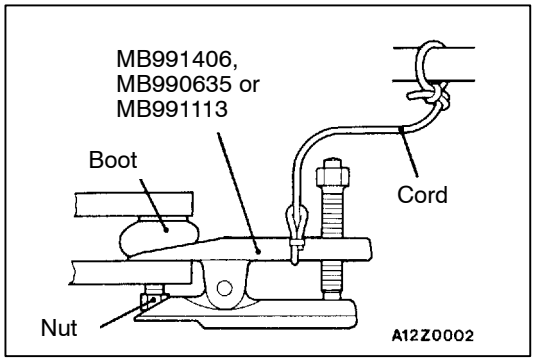


## REMOVAL SERVICE POINTS

### ◀A▶ TOE CONTROL ARM BALL JOINT AND KNUCKLE SEPARATION

**Caution**

**1. To prevent the ball joint thread from damage, only loosen but do not remove the nut securing the toe control arm to the knuckle from the ball joint and use the special tool.**

Purchased from www.WorkshopManuals.co.uk

www.WorkshopManuals.co.uk

2. **The special tool should be suspended from a cord to prevent it from being dropped.**

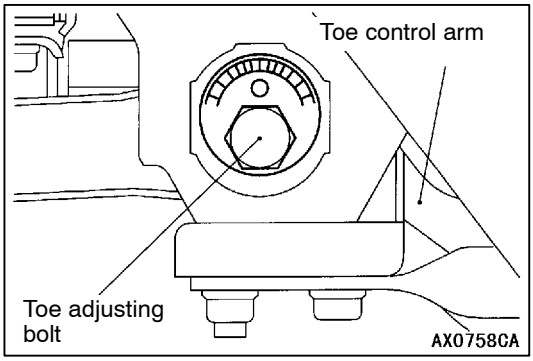


**◀B▶ BOLT ASSEMBLY (FOR TOE ADJUSTMENT) REMOVAL**

Make mating marks on the bracket and the toe adjusting bolt, and then remove the bolt.

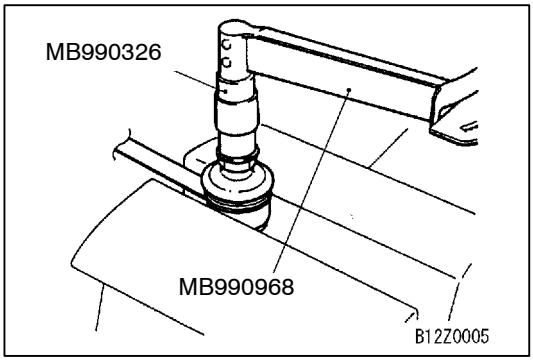


## INSPECTION

### TOE CONTROL ARM BALL JOINT TURNING TORQUE CHECK

1. After shaking the toe control arm ball joint stud several times, use the special tool to measure the turning torque of the toe control arm ball joint.

   **Standard value: 1.0 - 2.5 N·m**

2. When the measured value exceeds the standard value, replace the toe control arm ball joint assembly.
3. When the measured value is lower than the standard value, check that the toe control arm ball joint turns smoothly without excessive play. If there is no excessive play, the ball joint can be reused.

### TOE CONTROL ARM BALL JOINT DUST COVER CHECK

1. Check the dust cover for cracks or damage by pushing it with finger.
2. If the dust cover is cracked or damaged, replace the toe control arm ball joint assembly.

   NOTE
   Cracks or damage of the dust cover may cause damage of the ball joint. When it is damaged during service work, replace the dust cover.

Purchased from www.WorkshopManuals.co.uk

www.WorkshopManuals.co.uk

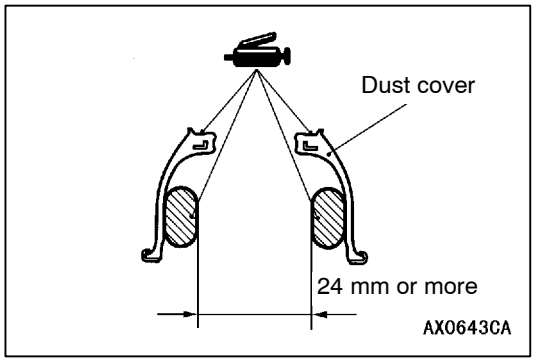


## TOE CONTROL ARM BALL JOINT DUST COVER REPLACEMENT

Only when the dust cover is damaged accidentally during service work, replace the dust cover as follows:

1. Remove the dust cover.
2. Fill the inside of the dust cover with the specified grease as shown in the illustration.
3. Apply the specified grease to the dust cover and ball joint stud as shown in the illustration.
4. Wrap plastic tape around the lower arm ball joint stud, and then install the dust cover to the toe control arm ball joint.

   **Caution**

   **Do not apply grease to the place (tapered section) where the threaded section of the ball joint connects with the knuckle. Wipe away any grease which gets on this section.**

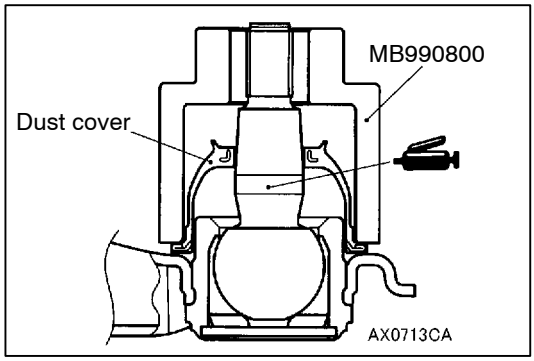


5. Using the special tool, drive the dust cover into the position shown in the illustration.

   **Caution**

   **To prevent the grease to be applied on the ball joint connection (taper) with knuckle, do not compress the dust cover before installation.**

6. Press the dust cover with your finger to check that there are no cracks or damage in the dust cover.

Purchased from www.WorkshopManuals.co.uk

www.WorkshopManuals.co.uk

# TRAILING ARM ASSEMBLY

## REMOVAL AND INSTALLATION

**Caution**

***: To prevent bushings from breakage, the parts indicated by * should be temporarily tightened, and then fully tightened with the vehicle on the ground in the unladen condition.**

**Post-installation Operations**
Wheel Alignment Check and Adjustment (Refer to P.34-4.)

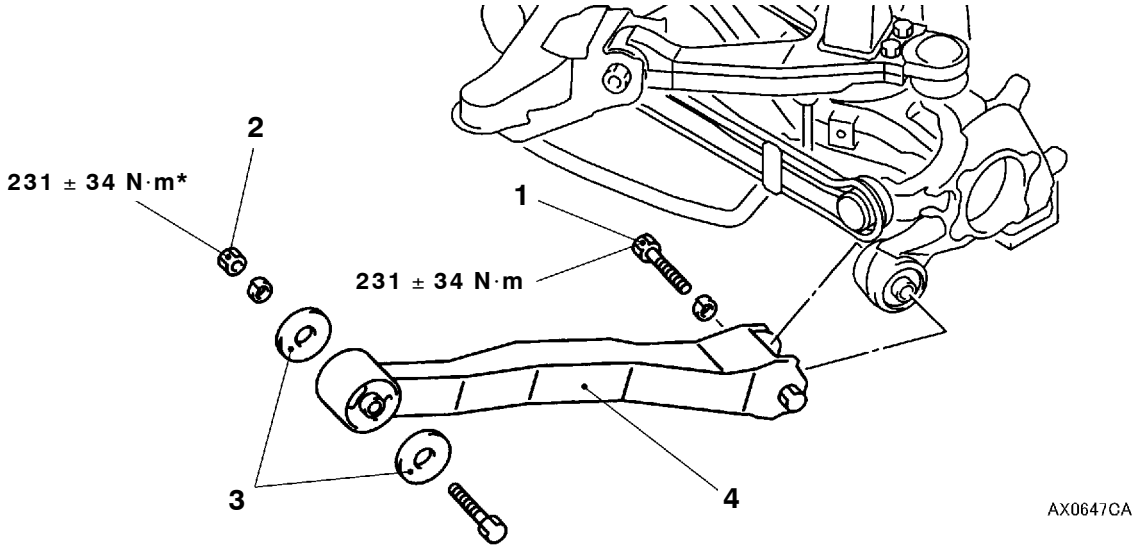


**Removal steps**

1. Trailing arm and knuckle connecting bolt
2. Trailing arm and rear frame connecting nut
3. Stopper
4. Trailing arm

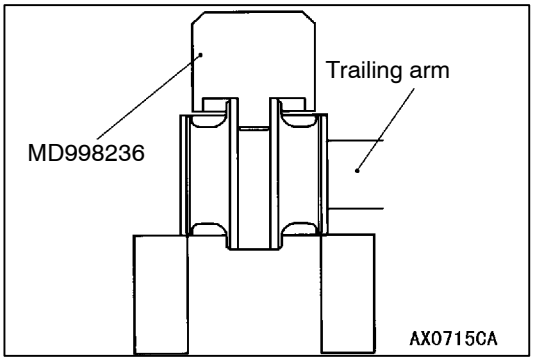


## BUSHING REPLACEMENT

1. Use the special tool to drive out and press fit the trailing arm bushing.

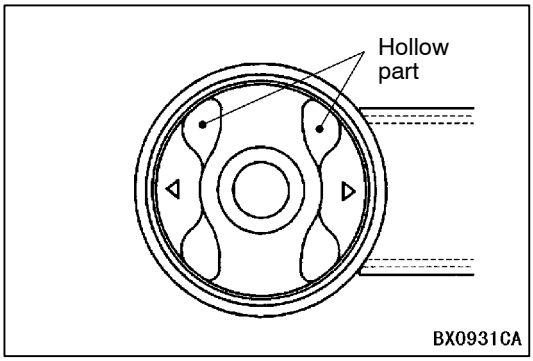


2. Apply a sufficient amount of soapy solution to the bushing and the inner surface of the trailing arm, and then press fit the bushing so that its hollow part is as shown and it protrudes by a same amount from the trailing arm.

Purchased from www.WorkshopManuals.co.uk

www.WorkshopManuals.co.uk

# Service Bulletins

**Click on the applicable bookmark to select the Service Bulletin.**

Purchased from www.WorkshopManuals.co.uk

www.WorkshopManuals.co.uk

MITSUBISHI MOTORS

# SERVICE BULLETIN

TECHNICAL SERVICE PLANNING
INTERNATIONAL CAR ADMINISTRATION OFFICE. MITSUBISHI MOTORS CORPORATION

| | | | |
|---|---|---|---|
| SERVICE BULLETIN | NO. : MSB-00E34-501 | | |
| | DATE : 2001-01-20 | <MODEL> (EC)PAJERO/ MONTERO (V60,V70) | <M/Y> 01-10 |
| SUBJECT : CORRECTION TO REAR SUSPENSION TOE ANGLE | | | |
| GROUP : REAR SUSPENSION | DRAFTNO. : 00SY102713 | | |
| CORRECTION | INTERNATIONAL CAR ADMINISTRATION OFFICE | T. MASAKI - MANAGER TECHNICAL SERVICE PLANNING | |

**1. Description:**

The rear suspension toe angle has been corrected.

**2. Applicable Manuals:**

| Manual | Pub. No. | Page |
|---|---|---|
| 2001 PAJERO Technical Information Manual | PYJE0001 (English) | 3-7 |
| 2001 PAJERO Workshop Manual chassis VOL2 | PWJE0001 (2/2) (English)<br>PWJF0003 (French)<br>PWJG0004 (German) | 34-3, 4 |
| 2001 MONTERO Workshop Manual chassis VOL2 | PWJS0002 (Spanish) | 34-3, 4 |



Purchased from www.WorkshopManuals.co.uk

www.WorkshopManuals.co.uk



## SERVICE SPECIFICATIONS

<Correct> 0°06' ± 0°06'

| Items | | Standard value |
|---|---|---|
| Toe-in | At the centre of tyre tread mm | 3 ± 3 |
| | Toe-angle (per wheel) | ~~1° 06' ± 1° 06'~~ <Incorrect> |
| Camber | | 0° ± 30'* |
| Thrust angle | | 0° ± 9' |
| Upper arm ball joint rotation torque N·m | | 0.5 – 3.0 |
| Stabilizer link ball joint turning torque N·m | | 0.5 – 2.0 |
| Toe control arm ball joint turning torque N·m | | 1.0 – 2.5 |

NOTE
*: difference between right and left wheels: less than 30'

## SPECIAL TOOLS

| Tool | Number | Name | Use |
|---|---|---|---|
| 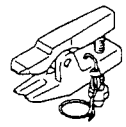 B991113 | MB990635, MB991113 or MB991406 | Steering linkage puller | Ball joint and knuckle disconnection |
| 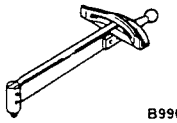 B990968 | MB990968 | Torque wrench | Upper arm ball joint, lower arm ball joint and stabilizer link ball joint rotation starting torque measurement |
| 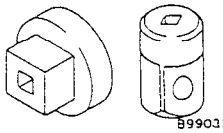 B990326 | MB990326 | Preload socket | |
| 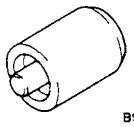 B990880 | MB990881 | Rear suspension bushing arbor | Lower arm bushing removal and press-fitting |
| 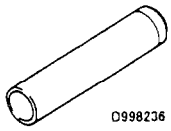 D998236 | MD998236 | Output shaft bearing installer | Trailing arm bushing removal and press-fitting |
| 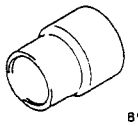 B990799 | MB990799 | Ball joint remover and installer | Upper arm ball joint dust cover press-in |



Purchased from www.WorkshopManuals.co.uk

www.WorkshopManuals.co.uk



| Tool | Number | Name | Use |
|---|---|---|---|
| 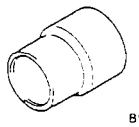 B990799 | MB990800 | Ball joint remover and installer | Toe control arm ball joint dust cover press-in |

## ON-VEHICLE SERVICE

### WHEEL ALIGNMENT CHECK AND ADJUSTMENT

1. The rear suspension, wheels and tyres should be serviced to normal condition prior to measurement of wheel alignment.
2. Measure the wheel alignment with the vehicle parked on a level surface.

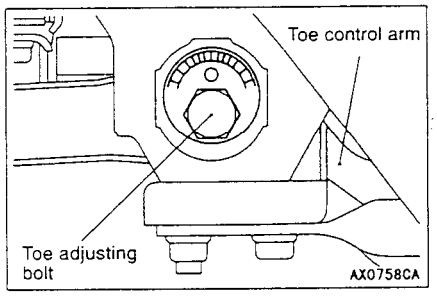


**TOE-IN** 0°06' ± 0°06' **<Correct>**

**Standard value:**

**At the centre of tyre tread 3 ± 3 mm**

**Toe angle (per wheel)** ~~1°06' ± 1°06'~~ **<Incorrect>**

If toe-in is not within the standard value, adjust by following procedures.

(1) Be sure to adjust the camber before making toe adjustment.

(2) Carry out adjustment by turning the toe adjusting bolt (toe control arm mounting bolt which faces the inside of the body).

**Left wheel: Turning clockwise (–) toe-in**

**Right wheel: Turning clockwise (+) toe-in**

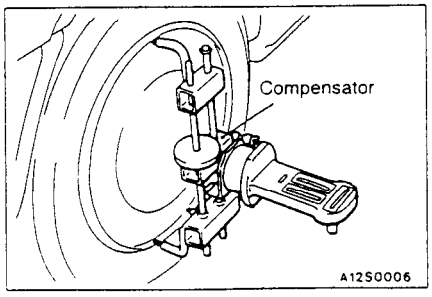


**CAMBER**

Use the compensator to measure camber.

**Standard value:**

**Camber 0° ± 30' (difference between right and left wheel: less than 30')**



Purchased from www.WorkshopManuals.co.uk

www.WorkshopManuals.co.uk

# BASIC BRAKE SYSTEM

**Click on the applicable bookmark to selected the required model year.**

Purchased from www.WorkshopManuals.co.uk

www.WorkshopManuals.co.uk

# BASIC BRAKE SYSTEM

## CONTENTS


**GENERAL INFORMATION . . . . . 3**

**SERVICE SPECIFICATIONS . . . . . 5**

**LUBRICANTS . . . . . 6**

**SPECIAL TOOLS . . . . . 6**

**TROUBLESHOOTING <Vehicles with ABS> . . . . . 7**

**ON-VEHICLE SERVICE . . . . . 19**

- Brake Pedal Check and Adjustment . . . . . 19
- Hydraulic Brake Booster (HBB) Operation Check <Vehicles with ABS> . . . . . 20
- HBB Check <Vehicles with ABS> . . . . . 23
- HBB Motor Relay Continuity Check <Vehicles with ABS> . . . . . 24
- Brake Booster Operating Test <Vehicles without ABS> . . . . . 24
- Check Valve Operation Check <Vehicles without ABS> . . . . . 25
- Load Sensing Spring Length Check and Adjustment <Vehicles without ABS> . . . . . 25
- Load Sensing Proportioning Valve Function Test <Vehicles without ABS> . . . . . 26
- Bleeding <Vehicles with ABS> . . . . . 27
- Bleeding <Vehicles without ABS> . . . . . 29
- Brake Fluid Level Sensor Check . . . . . 30
- Brake Booster Vacuum Switch Check <Vehicles with 4D5 engine> . . . . . 30
- Disc Brake Pad Check and Replacement . . . . . 31
- Disc Brake Rotor Check . . . . . 32
- Brake Disc Thickness Check . . . . . 32
- Brake Disc Run-out Check and Correction . . . . 33

**BRAKE PEDAL . . . . . 34**

**HYDRAULIC BRAKE BOOSTER (HBB) <Vehicles with ABS> . . . . . 36**

**HBB BUZZER <Vehicles with ABS> . . . . . 40**

**MASTER CYLINDER AND BRAKE BOOSTER <Vehicles without ABS> . . . . . 41**

- Master Cylinder . . . . . 43

**FRONT DISC BRAKE . . . . . 44**

**REAR DISC BRAKE . . . . . 49**

**LOAD SENSING PROPORTIONING VALVE <Vehicles without ABS> . . . . . 54**


Purchased from www.WorkshopManuals.co.uk

www.WorkshopManuals.co.uk

# GENERAL INFORMATION

The brake system offers high dependability and durability along with improved braking performance and brake sensitivity.

| Items | | Specifications |
|---|---|---|
| Hydraulic brake booster (HBB) <Vehicles with ABS> | Master cylinder type | Single type (with center valve) |
| | Master cylinder I.D. mm | 22.22 |
| | Boosting ratio | 5.4 <Pedal depressing force: 274 N> |
| Master cylinder <Vehicles without ABS> | Type | Tandem type |
| | I.D. mm | 23.81 |
| Brake booster <Vehicles without ABS> | Type | Vacuum type, tandem |
| | Effective dia. of power cylinder mm | 216 + 217 |
| | Boosting ratio | 6.5 <Pedal depressing force: 240 N> |
| Rear wheel hydraulic pressure control type <Vehicles with ABS> | | Electronic brake-force distribution (EBD) |
| Load sensing proportioning valve<Vehicles without ABS> | Decompression ratio | 0.3 |
| Front brakes | Type | Floating caliper, 2 piston, ventilated disc |
| | Disc effective dia. × thickness mm | 241 × 26 |
| | Wheel cylinder I.D. mm | 45.4 |
| | Pad thickness mm | 10.0 |
| | Clearance adjustment | Automatic |
| Rear brakes | Type | Floating caliper, 1 piston, ventilated disc |
| | Disc effective dia. × thickness mm | 256 × 22 |
| | Wheel cylinder I.D. mm | 44.5 |
| | Pad thickness mm | 10.0 |
| | Clearance adjustment | Automatic |
| Brake fluid | | DOT3 or DOT4 |

Purchased from www.WorkshopManuals.co.uk

www.WorkshopManuals.co.uk

## CONSTRUCTION DIAGRAM

**<Vehicles with ABS>**

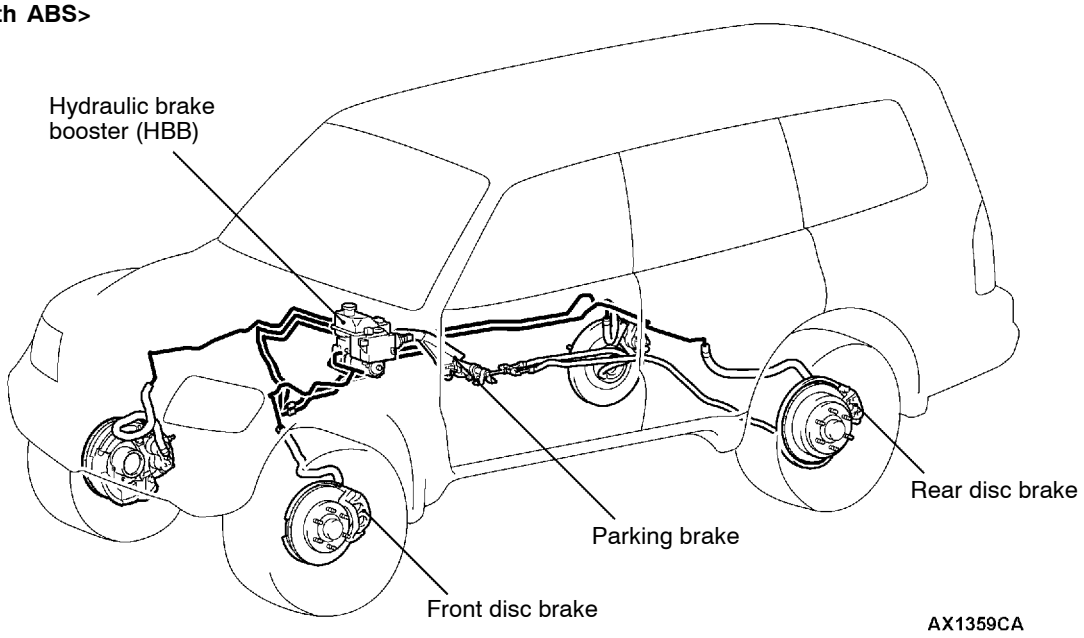


**<Vehicles without ABS>**

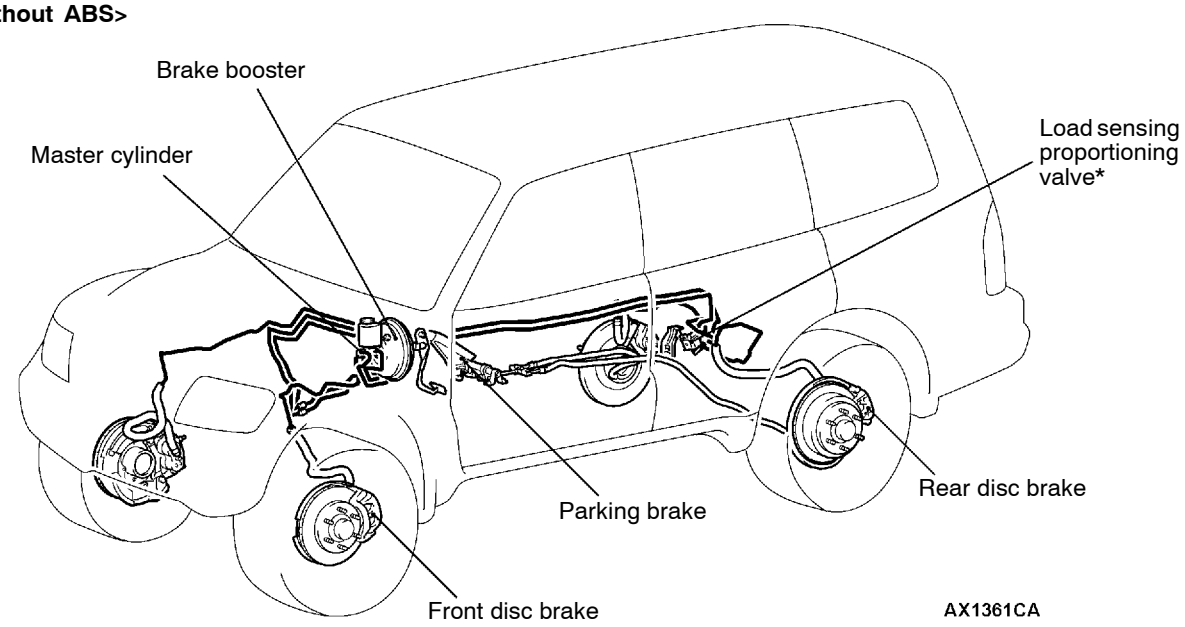


NOTE
For short wheelbase, only the position indicated by the * is symmetrical.

Purchased from www.WorkshopManuals.co.uk

www.WorkshopManuals.co.uk

# SERVICE SPECIFICATIONS

| Items | | | | Standard value | Limit |
|---|---|---|---|---|---|
| Brake pedal height mm | L.H. drive vehicles | | | 192 - 195 | - |
| | R.H. drive vehicles | | | 187 - 190 | - |
| Brake pedal play mm | | | | 3 - 8 | - |
| Brake pedal to floorboard clearance when the brake pedal is depressed mm | | | | 90 or more | - |
| Hydraulic brake booster (HBB) <Vehicles with ABS> | Pump motor operation time second | When power supply system brake fluid pressure is not applied | | 20 - 80 | - |
| | | When power supply system brake fluid pressure is applied | | 2 - 11 | - |
| | Hydraulic pressure during no vacuum operation test MPa | Pedal depression force: 100 N | Front | 0.6 or more | - |
| | | | Rear | 0 | - |
| | | Pedal depression force: 500 N | Front | 4.5 or more | - |
| | | | Rear | 0 | - |
| | Hydraulic pressure during vacuum operation test MPa | Pedal depression force: 100 N | Front | 3.0 - 4.0 | - |
| | | | Rear | 3.3 - 4.3 | - |
| | | Pedal depression force: 200 N | Front | 8.0 - 10.0 | - |
| | | | Rear | 8.0 - 10.0 | - |
| | | Pedal depression force: 400 N | Front | 14.0 - 18.0 | - |
| | | | Rear | 14.0 - 18.0 | - |
| | | Pedal depression force: 500 N | Front | 15.0 - 19.0 | - |
| | | | Rear | 15.0 - 19.0 | - |
| Clearance between brake booster push rod and primary piston mm <Vehicles without ABS> | | | 6G7 | 0.5 - 0.9 | - |
| | | | 4D5, 4M4 | 0.8 - 1.2 | - |
| Load sensing proportioning valve output fluid pressure (Input fluid pressure) MPa <Vehicles without ABS> | When load sensing spring length is 133 mm (when unladen) | | Short wheelbase | 4.9 - 5.9 (9.8) | - |
| | | | Long wheelbase | 5.9 - 6.9 (9.8) | - |
| | When load sensing spring length is 149 mm (when laden) | | Short wheelbase | 7.5 - 8.5 (9.8) | - |
| | | | | 9.0 - 11.0 (16.7) | - |
| | | | Long wheelbase | 9.3 - 10.3 (9.8) | - |
| | | | | 11.4 - 13.4 (16.7) | - |
| Load sensing spring length <Distance between spring ends> mm <Vehicles without ABS> | | | | 135 - 139 | - |

Purchased from www.WorkshopManuals.co.uk

www.WorkshopManuals.co.uk

| Items | | Standard value | Limit |
|---|---|---|---|
| Front disc brake | Pad thickness mm | 10.0 | 2.0 |
| | Disc thickness mm | 26.0 | 24.4 |
| | Disc runout mm | - | 0.06 |
| | Drag force N | 55 | - |
| Rear disc brake | Pad thickness mm | 10.0 | 2.0 |
| | Disc thickness mm | 22.0 | 20.4 |
| | Disc runout mm | - | 0.06 |
| | Drag force N | 55 | - |
| Front hub end play mm | | - | 0 |
| Rear hub end play mm | | - | 0 |

## LUBRICANTS

| Items | Specified Lubricant | Quantity |
|---|---|---|
| Brake fluid | DOT3 or DOT4 | As required |
| Piston boot, piston seal | Repair kit grease | |
| Guide pin, lock pin | | |
| Piston, wheel cylinder body | DOT3 or DOT4 | |

## SPECIAL TOOLS

| Tool | Number | Name | Use |
|---|---|---|---|
| 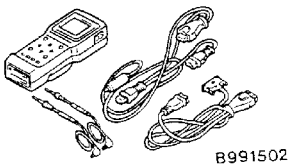  | MB991502 | MUT-II sub assembly | • Hydraulic brake booster (HBB) check (Reading diagnosis code by using MUT-II)<br>• Air bleeding of hydraulic brake booster (HBB) ABS system |
| 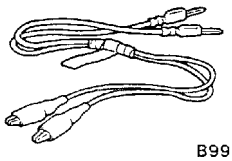  | MB991529 | Diagnosis code check harness | • Hydraulic brake booster (HBB) check (Reading diagnosis code by using brake warning lamp)<br>• Erasing diagnosis code (not using MUT-II) |
| 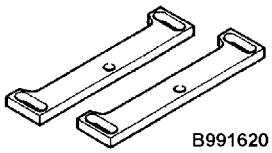  | MB991620 | Valve spring compressor adapter | Holding hydraulic brake booster (HBB) |

Purchased from www.WorkshopManuals.co.uk

www.WorkshopManuals.co.uk

| Tool | Number | Name | Use |
|---|---|---|---|
| 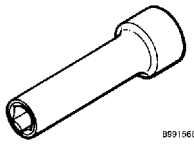 | MB991568 | Push rod adjusting socket | Adjustment of the brake booster push rod protrusion amount |
| 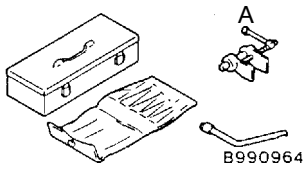 | MB990964<br>A: MB990520 | Brake tool set<br>A: Disc brake piston expander | Pushing-in of the disc brake piston |

# TROUBLESHOOTING <Vehicles with ABS>

## STANDARD FLOW OF DIAGNOSTIC TROUBLESHOOTING

Refer to GROUP 00 - How to Use Troubleshooting/Inspection Service Points.

## NOTES WITH REGARD TO DIAGNOSIS

1. The hydraulic brake booster (HBB) accumulates a high-pressure fluid in the accumulator by operating the pump motor, thus boosting the brake. Therefore, the pump motor generates an operating sound, but it indicates that the HBB is operating correctly, and it is not a malfunction.
2. Diagnosis detection condition can vary depending on the diagnosis code.
   Make sure that checking requirements listed in the “Comment” are satisfied when checking the trouble symptom again.

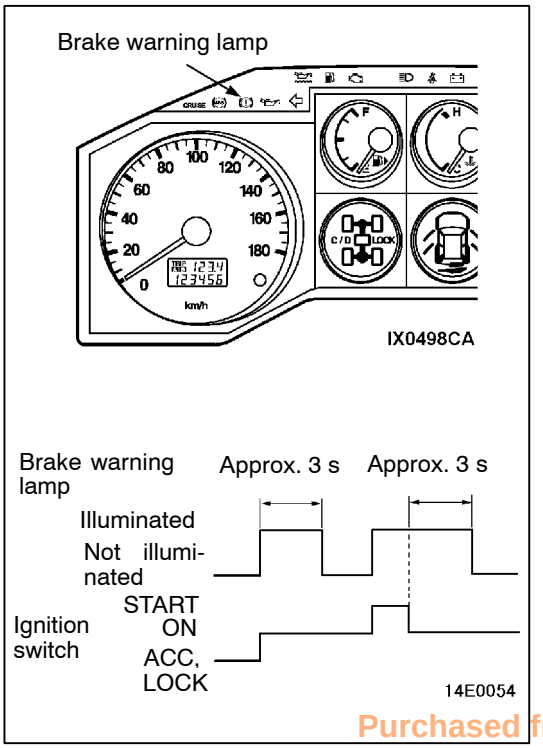


## BRAKE WARNING LAMP INSPECTION

Check that the brake warning lamp illuminates as follows.

1. When the ignition key is turned to “ON”, the brake warning lamp illuminates for approximately 3 seconds and then switches off.
2. When the ignition key is turned to “START”, the brake warning lamp remains illuminated.
3. When the ignition key is turned from “START” back to “ON”, the brake warning lamp illuminates for approximately 3 seconds and then switches off.
4. If the illumination is other than the above, check the diagnosis codes.

Purchased from www.WorkshopManuals.co.uk

www.WorkshopManuals.co.uk

## DIAGNOSIS FUNCTION

### READING DIAGNOSIS CODES

Read a diagnosis code by the MUT-II or brake warning lamp. (Refer to GROUP 00 - How to Use Troubleshooting/Inspection Service Points.)

NOTE
Connect the MUT-II to the diagnosis connector (16-pin).

### ERASING DIAGNOSIS CODES

**When using the MUT-II**

Connect the MUT-II to the diagnosis connector (16-pin) and erase the diagnosis code.

**Caution**
**Turn the ignition key to the LOCK (OFF) position before connecting or disconnecting the MUT-II.**
**When not using the MUT-II**

1. Stop the engine.

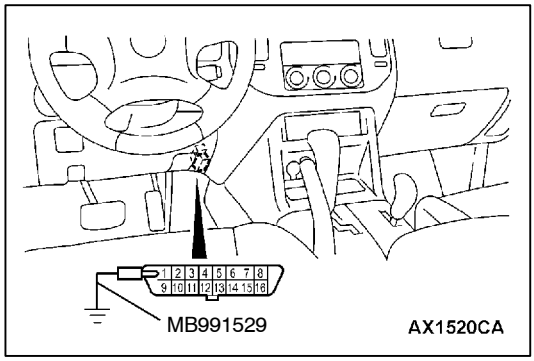


2. Use the special tool to earth terminal (1) (diagnosis control terminal) of the diagnosis connector.
3. Turn on the stop lamp switch. (Depress the brake pedal.)
4. After carrying out steps 1. to 3., turn the ignition switch to ON. Within 3 seconds after turning the ignition switch to ON, turn off the stop lamp switch (release the brake pedal). Then, turn the stop lamp switch on and off a total of 10 times.

   NOTE
   If the ABS-ECU function has been stopped because of fail-safe operation, it will not be possible to erase the diagnosis codes.

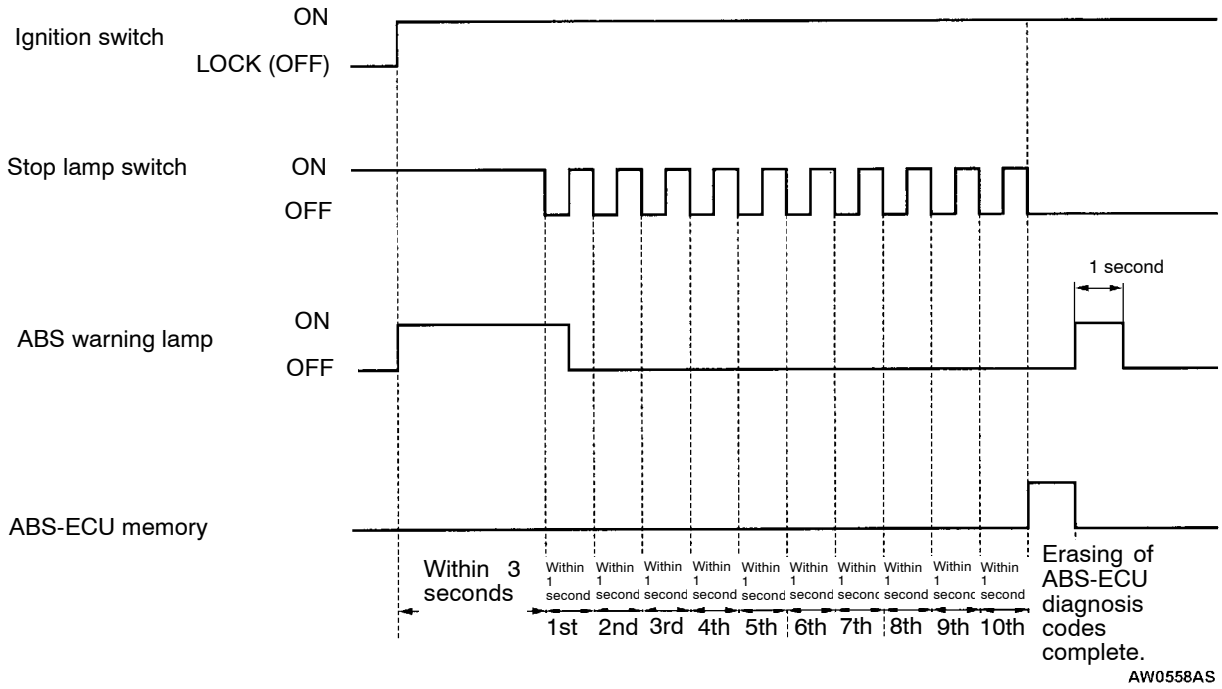


Purchased from www.WorkshopManuals.co.uk

www.WorkshopManuals.co.uk

## INSPECTION CHART FOR DIAGNOSIS CODES

| Diagnosis code No. | Diagnosis items | Reference page |
|---|---|---|
| 16* | ABS-ECU power supply (Abnormal voltage decrease or increase) | 35A-9 |
| 17, 18 | ABS-ECU power supply (Open circuit or short circuit) | |
| 53 | Motor relay system (open circuit, short circuit or motor relay coil failure) | 35A-10 |
| 55 | Pump motor system (Pump motor seized or abnormal ABS-ECU current detection circuit) | 35A-11 |
| 63 | ABS-ECU system | Replace ABS-ECU (Refer to 35B.) |
| 78 | Accumulator system (Motor has been energized abnormally for long time or abnormal low-pressure accumulator) | 35A-12 |
| 79 | Pressure switch system (open circuit or short circuit) | 35A-13 |

NOTE
*: Code No. 16 is erased by turning the ignition switch OFF.

## INSPECTION PROCEDURE FOR DIAGNOSIS CODES

| **Code No.16 ABB-ECU power supply system (abnormal voltage increase or decrease)**<br>**Code No.17, 18 ABS-ECU power supply system (open or short circuit)** | **Probable cause** |
|---|---|
| Code No.16 is output if the ABS-ECU power supply voltage is increased or decreased than the specified.<br>Code No.17, 18 is output if the ABS-ECU power supply circuit is open or short, or the ABS-ECU internal circuit is defective.<br>In addition, code No. 16 is erased by turning the ignition switch OFF. | • Malfunction of the battery<br>• Malfunction of connector or harness<br>• Malfunction of the ABS-ECU |

**Caution**
**If the battery voltage is decreased or increased during the test, code No. 16 is output as a present malfunction, disabling a correct diagnosis. Check the battery and fully charge it if necessary before carrying out the following tests.**

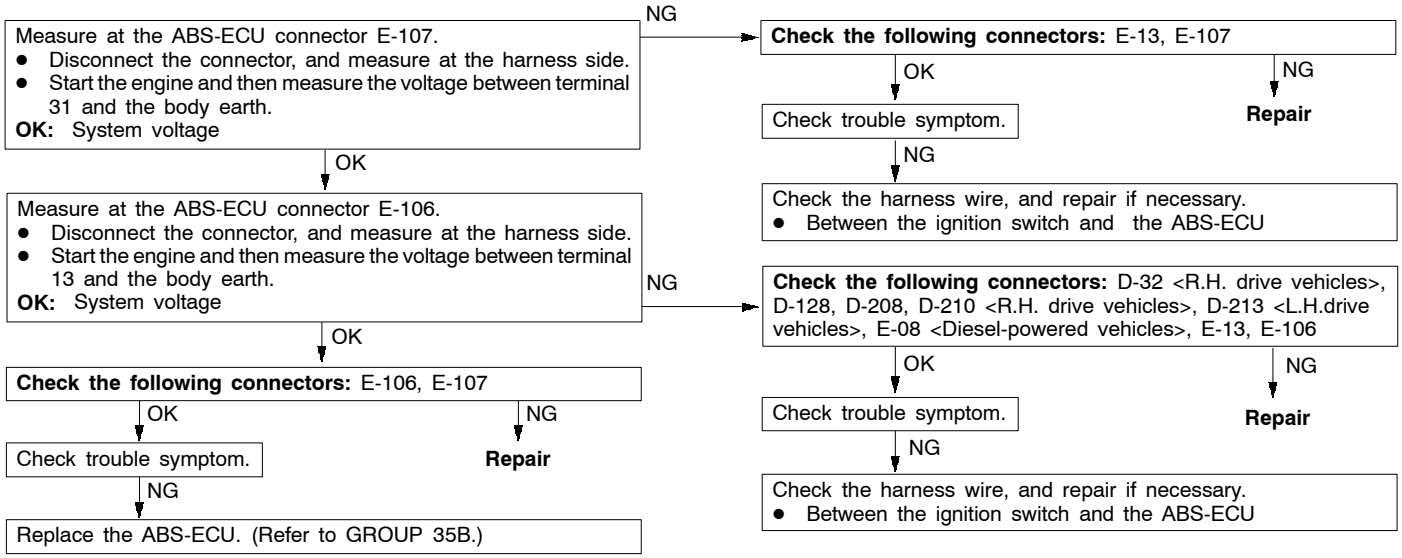


Purchased from www.WorkshopManuals.co.uk

www.WorkshopManuals.co.uk

| Code No.53 Motor relay system (open circuit, short circuit or a defective motor relay coil) | Probable cause |
|---|---|
| This code is output if the motor relay circuit is short or open, ABS-ECU internal circuit is defective, or the hydraulic brake booster (HBB) master cylinder and hydraulic unit assembly is defective. | • Malfunction of connector or harness<br>• Malfunction of the motor relay<br>• Malfunction of the ABS-ECU<br>• Malfunction of the HBB (master cylinder and hydraulic unit assembly) |

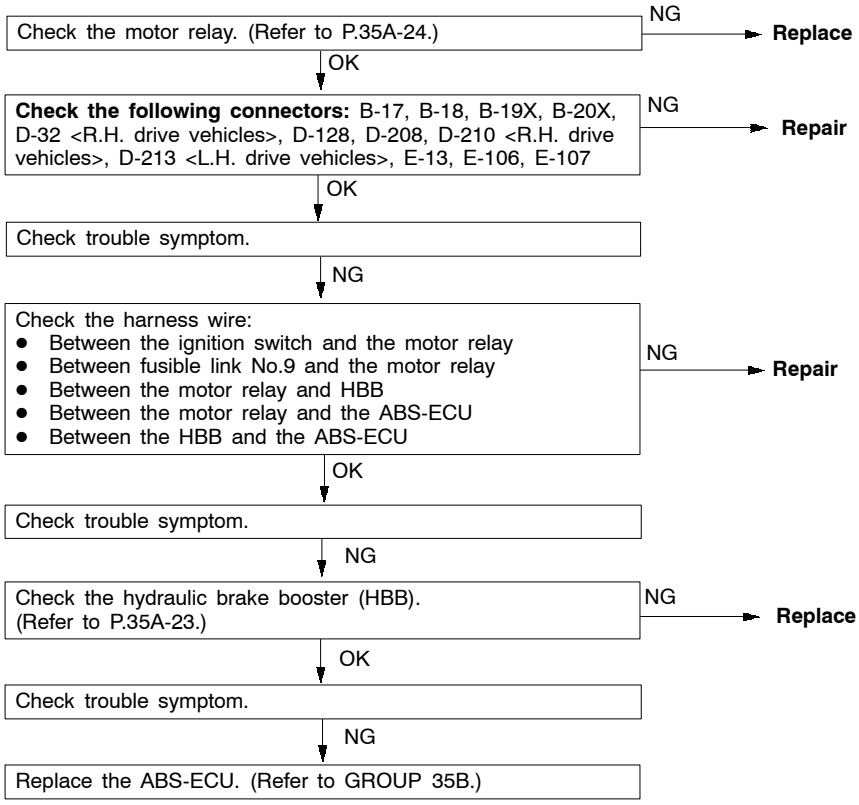


Purchased from www.WorkshopManuals.co.uk

www.WorkshopManuals.co.uk

| Code No.55 Pump motor system (pump motor seized or abnormal ABS-ECU current detection circuit) | Probable cause |
|---|---|
| This code is output if the motor relay drive circuit is short or open, the motor relay or the ABS-ECU internal circuit is defective, or the hydraulic brake booster (HBB) pump motor or master cylinder and hydraulic unit assembly is defective. | • Malfunction of connector or harness<br>• Malfunction of the motor relay<br>• Malfunction of the ABS-ECU<br>• Malfunction of the HBB (pump motor or master cylinder and hydraulic unit assembly) |

Check the continuity and resistance of the pump motor. (Refer to P.35A-23.)
- NG → **Replace**
- OK ↓

Check the motor relay. (Refer to P.35A-24.)
- NG → **Replace**
- OK ↓

**Check the following connectors:** B-17, B-18, B-19X, B-20X, E-107
- NG → **Repair**
- OK ↓

Check trouble symptom.
- NG ↓

Check the harness wire:
- Between fusible link No.9 and the motor relay
- Between the motor relay and HBB
- Between the HBB and the ABS-ECU
- Between the HBB and the earth

- NG → **Repair**
- OK ↓

Check trouble symptom.
- NG ↓

Check the hydraulic brake booster (HBB). (Refer to P.35A-23.)
- NG → **Replace**
- OK ↓

Check trouble symptom.
- NG ↓

Replace the ABS-ECU. (Refer to GROUP 35B.)

Purchased from www.WorkshopManuals.co.uk

www.WorkshopManuals.co.uk

| Code No. 78 Accumulator system (Motor has been energized abnormally for long time or abnormal low-pressure accumulator) | Probable cause |
|---|---|
| This code is output under the following cases:<br>● Pump motor is operated for consecutive 300 seconds<br>● Brake fluid pressure is decreased, the HBB buzzer sounds due to the operation of the pressure switch (for low pressure warning), and then the brake warning lamp illuminates. | ● Brake fluid leaks inside the hydraulic brake booster (HBB)<br>● Malfunction of the HB motor relay<br>● Malfunction of connector or harness<br>● Malfunction of the ABS-ECU<br>● Malfunction of HBB (accumulator, pressure switch, pump motor or master cylinder and hydraulic unit assembly) |

Visually check the accumulator
- NG → **Replace**
- OK ↓

Check the continuity and resistance of the pump motor. (Refer to P.35A-23.)
- NG → **Replace**
- OK ↓

Check the motor relay. (Refer to P.35A-24.)
- NG → **Replace**
- OK ↓

**Check the following connectors:** B-17, B-18, B-19X, B-20X, E-106, E-107
- NG → **Repair**
- OK ↓

Check trouble symptom.
- NG ↓

Check the harness wire:
- Between fusible link No.9 and the motor relay
- Between the motor relay and HBB
- Between the HBB and the ABS-ECU
- Between the HBB and the earth

- NG → **Repair**
- OK ↓

Check trouble symptom.
- NG ↓

Check the pressure switch. (Refer to P.35A-23.)
- NG → Replace the master cylinder and hydraulic unit assembly.
- OK ↓

Check trouble symptom.
- NG ↓

Replace the ABS-ECU. (Refer to GROUP 35B.)

Purchased from www.WorkshopManuals.co.uk

www.WorkshopManuals.co.uk

| Code No.79 Pressure switch system (open or short circuit) | Probable cause |
|---|---|
| This code is output if the pressure switch circuit is short, ABS-ECU internal circuit is defective, or the hydraulic brake booster (HBB) pressure switch or master cylinder and hydraulic unit assembly is defective. | • Malfunction of connector or harness<br>• Malfunction of the ABS-ECU<br>• Malfunction of the HBB (pressure switch or master cylinder and hydraulic unit assembly) |

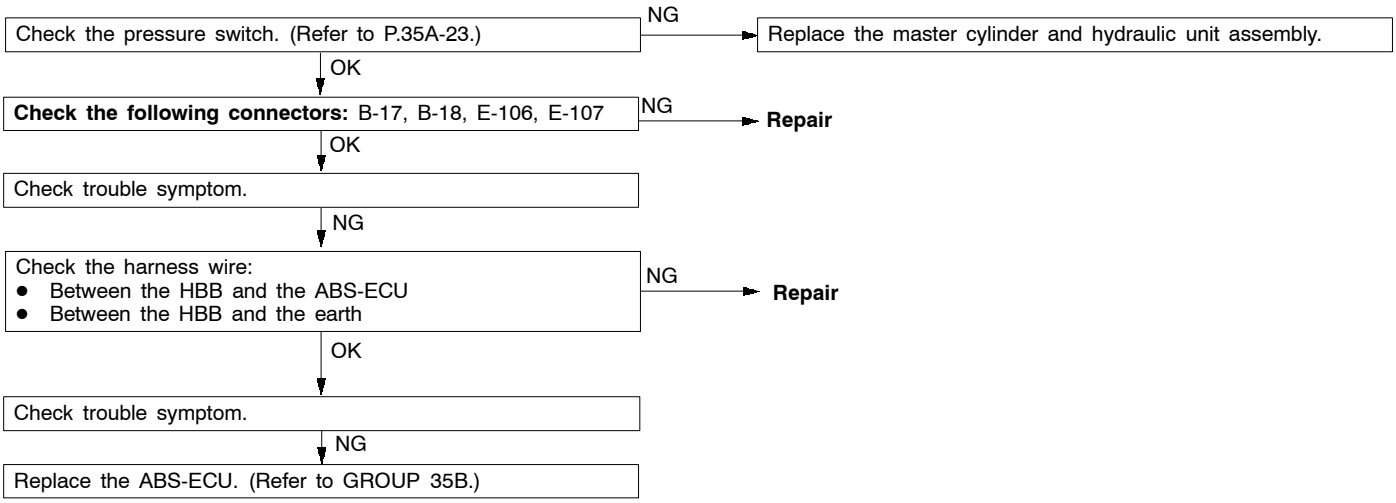


## INSPECTION CHART FOR TROUBLE SYMPTOMS

| Trouble symptom | Inspection procedure No. | Reference page |
|---|---|---|
| The brake warning lamp does not illuminate when the ignition switch is turned ON (engine stopped). | 1 | 35A-14 |
| The brake warning lamp remains illuminated after the engine is started. | 2 | 35A-15 |
| The HBB buzzer does not sound when the hydraulic brake booster (HBB) is defective. (However, the brake warning lamp is illuminated.) | 3 | 35A-15 |
| The HBB buzzer does not stop sounding. | 4 | 35A-16 |
| Communication with MUT-II is not possible. | Refer to GROUP 35B. | |
| Communication with MUT-II and the ABS-ECU is not possible. | | |

Purchased from www.WorkshopManuals.co.uk

www.WorkshopManuals.co.uk

## Inspection procedure 1

| The brake warning lamp does not illuminate when the ignition switch is turned ON (engine stopped). | Probable cause |
|---|---|
| The cause may be an open circuit in the lamp power supply circuit, a blown lamp, a malfunction of the lamp drive transistor inside the ABS-ECU, an open circuit between the ignition switch and brake warning lamp or an short circuit between the brake warning lamp and the ABS-ECU. | • Blown fuse<br>• Burn out brake warning lamp bulb<br>• Malfunction of combination meter<br>• Malfunction of connector or harness<br>• Malfunction of ABS-ECU (lamp drive transistor) |

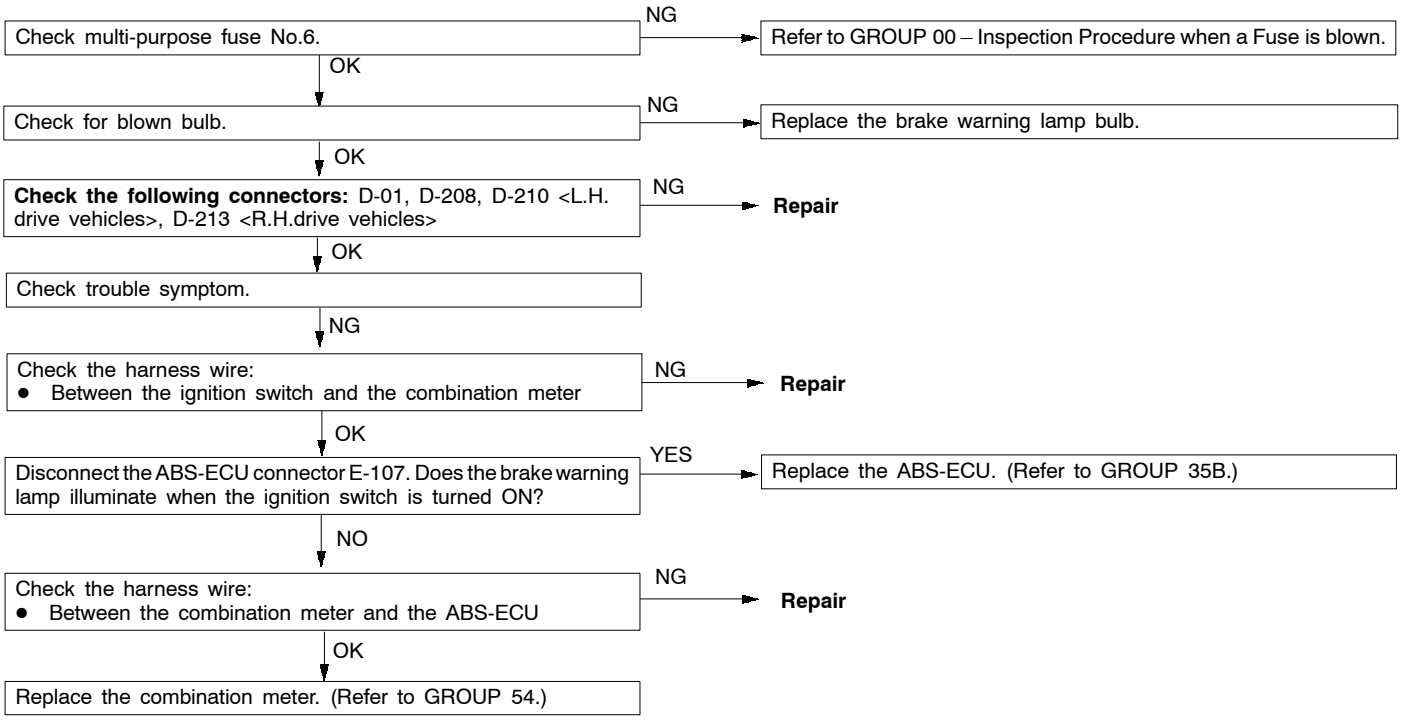


Purchased from www.WorkshopManuals.co.uk

www.WorkshopManuals.co.uk

## Inspection procedure 2

| The brake warning lamp remains illuminated after the engine is started. | Probable cause |
|---|---|
| The cause is probably malfunction of the lamp drive transistor inside the ABS-ECU or an open circuit between the brake warning lamp and the ABS-ECU. | • Malfunction of combination meter<br>• Malfunction of connector or harness<br>• Malfunction of ABS-ECU (lamp drive transistor) |

NOTE
This trouble symptom is limited to cases where communication with the MUT-II is possible(ABS-ECU power supply is normal) and the diagnosis code is a normal diagnosis code.

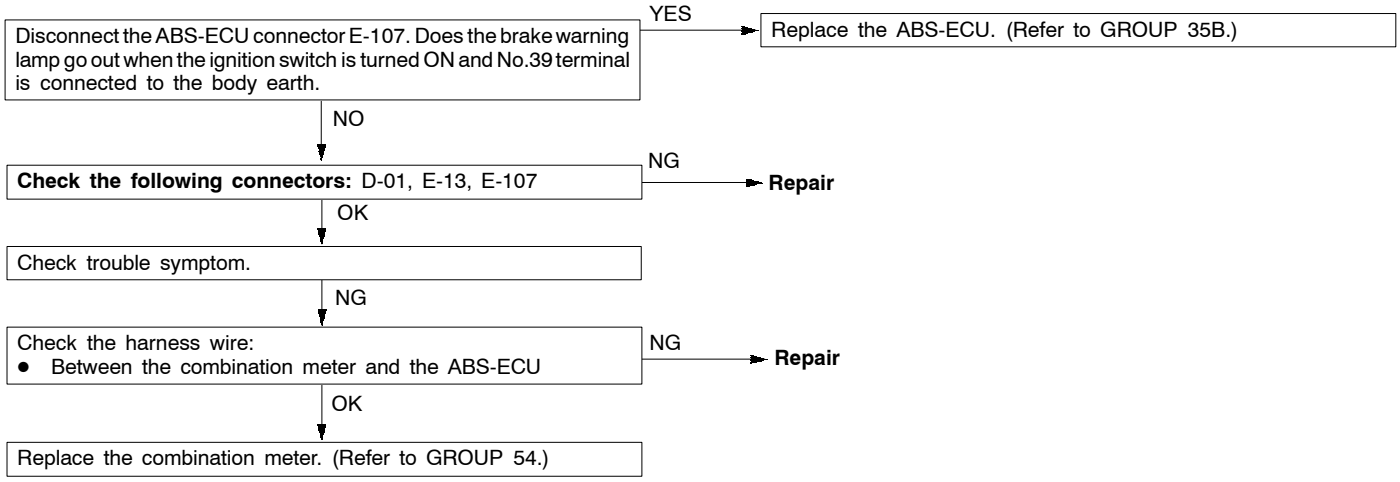


## Inspection procedure 3

| The HBB buzzer does not sound when the hydraulic brake booster (HBB) is defective. (However, the brake warning lamp is illuminated.) | Probable cause |
|---|---|
| The cause is probably an open circuit in the buzzer power supply circuit, a defective buzzer, a malfunction of the buzzer drive transistor inside the ABS-ECU or an open circuit from the ignition switch through the HBB buzzer to the ABS-ECU. | • Blown fuse<br>• Malfunction of the HBB buzzer<br>• Malfunction of connector or harness<br>• Malfunction of ABS-ECU (buzzer drive transistor) |

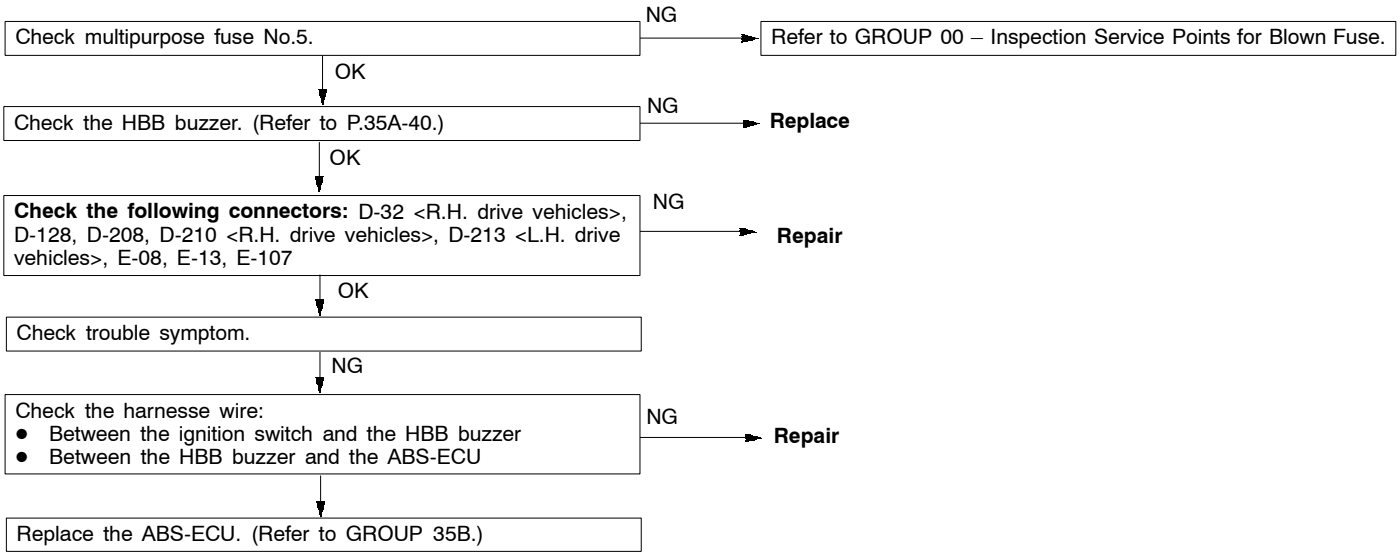


Purchased from www.WorkshopManuals.co.uk

www.WorkshopManuals.co.uk

### Inspection procedure 4

| The HBB buzzer does not stop sounding. | Probable cause |
|---|---|
| The HBB buzzer circuit may be short. | • Malfunction of the HBB buzzer<br>• Malfunction of the harness<br>• Malfunction of ABS-ECU (buzzer drive transistor) |

NOTE
This trouble symptom is limited to cases where communication with the MUT-II is possible (ABS-ECU power supply is normal) and the diagnosis code is a normal diagnosis code.

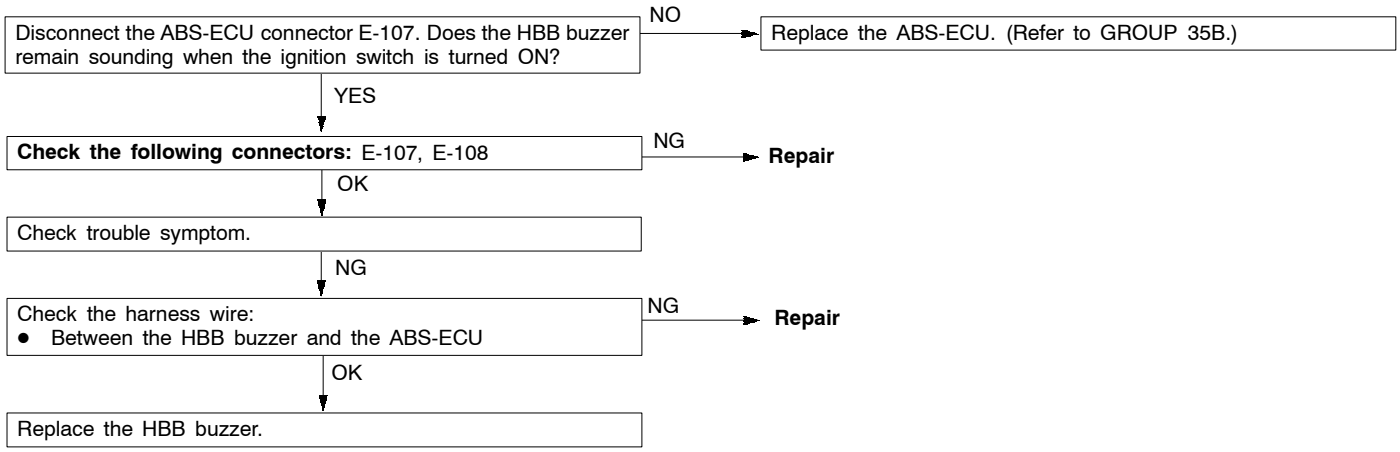


## ACTUATOR TEST REFERENCE TABLE

The MUT-II activates the following actuators for testing.

NOTE
1. If the ABS-ECU runs down, actuator testing cannot be carried out.
2. Actuator testing is only possible when the vehicle is stationary.

### ACTUATOR TEST SPECIFICATIONS

| Item No. | Inspection item | Drive contents |
|---|---|---|
| 01 | HBB pump motor | Operate the pump motor for one second. |
| 02 | HBB buzzer | Sound the buzzer for three seconds. |

Purchased from www.WorkshopManuals.co.uk

www.WorkshopManuals.co.uk

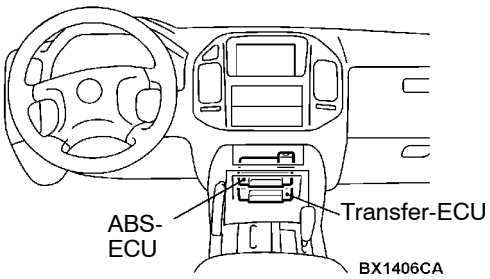


**ABS-ECU side connector**

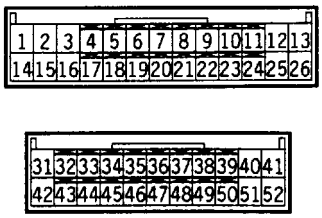


## CHECK AT ABS-ECU

NOTE
The two same ECUs are installed behind the floor console. The upper ECU is the ABS-ECU and has a blue connector. The lower ECU is the transfer-ECU and has a green connector.

### TERMINAL VOLTAGE CHECK CHART

1. Measure the voltage between each terminal and the earth.
2. The terminal layout is shown in the illustration.

| Terminal No. | Check item | Check requirements | | Normal condition |
|---|---|---|---|---|
| 36 | MUT-II | When the MUT-II is connected | | Serial communication with the MUT-II |
| | | When the MUT-II is not connected | | 1 V or less |
| 13, 31 | ABS-ECU power supply | Ignition switch: ON | | System voltage |
| | | Ignition switch: START | | 0 V |
| 47 | Diagnosis changeover input | When the MUT-II is connected | | 1 V or less |
| | | When the MUT-II is not connected | | Approximately 12 V |
| 39 | Output to brake warning lamp | Ignition switch: ON | When the lamp is off | 2 V or less |
| | | | When the lamp is on | System voltage |
| 44 | Output to the HBB buzzer | Ignition switch: ON | When the HBB buzzer does not sound | System voltage |
| | | | When the HBB buzzer sounds | 2 V or less |
| 6, 38 | Output to the motor relay | Ignition switch: ON | When the pump motor is not operating | System voltage |
| | | | When the pump motor is operating | 2 V or less |
| 17 | Output to the pressure switch (for low pressure warning) | Ignition switch: ON | When the brake fluid pressure is low (When the HBB buzzer sounds) | Approximately 9 V |
| | | | When the brake fluid pressure is normal (When the HBB buzzer does not sound) | Approximately 4 V |

Purchased from www.WorkshopManuals.co.uk

www.WorkshopManuals.co.uk

| Terminal No. | Check item | Check requirements | | Normal condition |
|---|---|---|---|---|
| 43 | Output to pressure switch (for pump control) | Ignition switch: ON | When the brake fluid pressure is low (When the pump motor is operating) | Approx. 6V |
| | | | When the brake fluid pressure is high (When the pump motor is not operating) | 2 V or less |
| 35 | Negative current detection input from the pump motor | Ignition switch: ON | When the pump motor is not operating | 2 V or less |
| | | | When the pump motor is operating | 2 V or less |
| 49 | Voltage detection input from the pump motor | Ignition switch: ON | When the pump motor is not operating | 2 V or less |
| | | | When the pump motor is operating | 2 V or less |
| 45 | Positive current detection input from the pump motor | Ignition switch: ON | When the pump motor is not operating | 2 V or less |
| | | | When the pump motor is operating | System voltage |

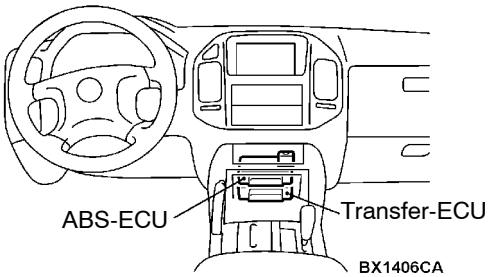


**Harness side connector**

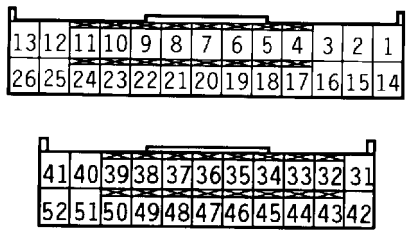


## CONTINUITY BETWEEN HARNESS-SIDE CONNECTOR TERMINALS

NOTE
The two same ECUs are installed behind the floor console. The upper ECU is the ABS-ECU and has a blue connector. The lower ECU is the transfer-ECU and has a green connector.

1. Turn the ignition key to the LOCK (OFF) position.
2. Disconnect the ABS-ECU connector.
3. Check the continuity between the terminals indicated in the table below.
4. The terminal layout is shown in the illustration.

| Terminal No. | Signal name | Normal condition |
|---|---|---|
| Between terminal 12 and the body earth | Earth | Continuity exists. |
| Between terminal 25 and the body earth | Earth | |
| Between terminal 26 and the body earth | Earth | |
| Between terminal 42 and the body earth | Earth | |

Purchased from www.WorkshopManuals.co.uk

www.WorkshopManuals.co.uk

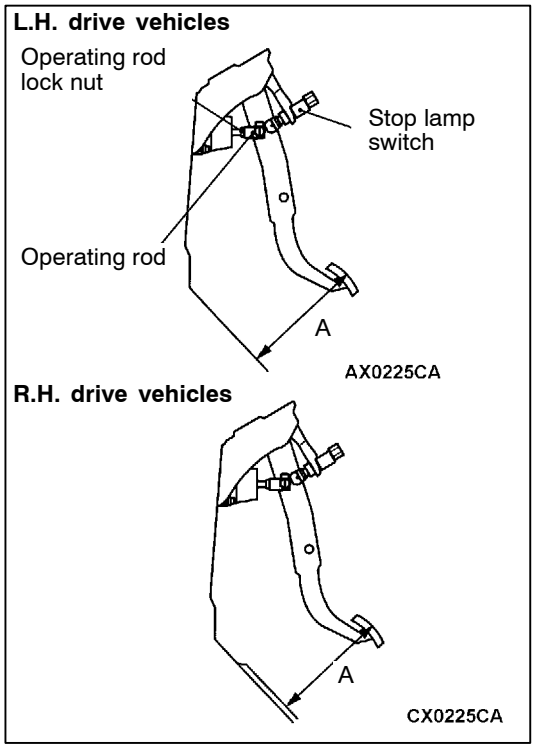


# ON-VEHICLE SERVICE

## BRAKE PEDAL CHECK AND ADJUSTMENT

### BRAKE PEDAL HEIGHT

1. Turn up the carpet, etc. under the brake pedal.
2. Measure the brake pedal height as illustrated.

   **Standard value (A):**
   **<L.H. drive vehicles> 192 - 195 mm**
   **<R.H. drive vehicles> 187 - 190 mm**

3. If the brake pedal height is not within the standard value, follow the procedure below.
   (1) Disconnect the stop lamp switch connector.
   (2) Loosen the stop lamp switch by turning it approx. 1/4 turns anticlockwise.
   (3) Remove the pin, and then adjust so that the brake pedal height meets the standard value by turning the clevis.

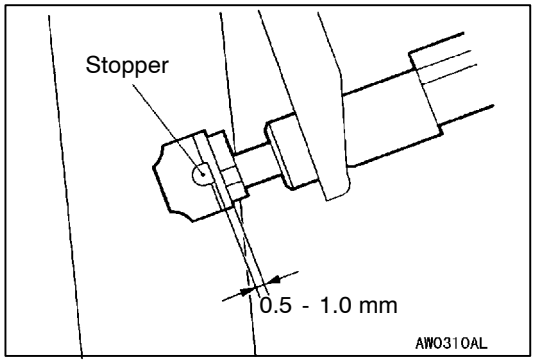


   (4) Screw in the stop lamp switch until it touches the stopper. At this time, support the brake pedal to the highest position by hand.
   (5) Lock the stop lamp switch by turning it approx. 1/4 turns clockwise, and confirm that the clearance between the switch plunger and the stopper is as shown.
   (6) Connect the connector at the stop lamp switch.

   **Caution**
   **Check that the stop lamp does not illuminate when the brake pedal is not depressed.**

4. For A/T, check the key interlock and shift lock mechanisms. (Refer to GROUP 23 - On-vehicle Service.)
5. Return the carpet, etc.

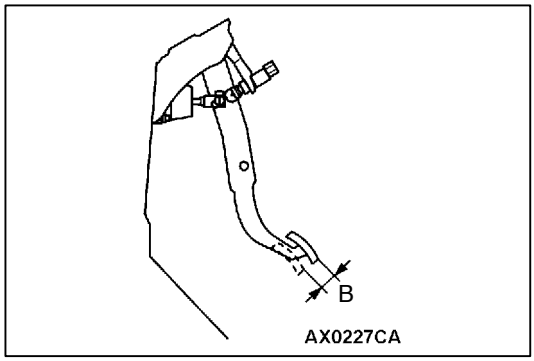


### BRAKE PEDAL FREE PLAY

1. Turn the ignition switch to LOCK (OFF) position. Depressurise the power supply system of the hydraulic brake booster (HBB) by depressing the brake pedal at least forty times until the pedal effort becomes high. Then push the pedal with your finger to check the pedal height (free play) is within the standard value.

   **Standard value (B): 3 – 8 mm**

Purchased from www.WorkshopManuals.co.uk

www.WorkshopManuals.co.uk

2. If the brake pedal play is not within the standard value, check the following, and adjust or replace if necessary:
   - Excessive play between the brake pedal and the clevis pin, or between the clevis pin and the brake booster operating rod
   - Brake pedal height
   - Installation position of the stop lamp switch, etc.

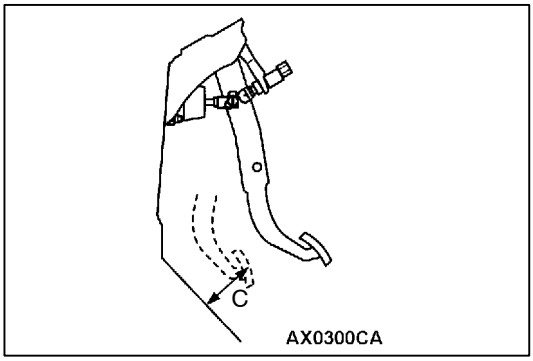


**CLEARANCE BETWEEN BRAKE PEDAL AND FLOOR BOARD**

1. Turn up the carpet etc. under the brake pedal.
2. Start the engine, depress the brake pedal with approximately 490 N of force, and measure the clearance between the brake pedal and the floorboard.

   **Standard value (C): 90 mm or more**
3. If the clearance is outside the standard value, check for air trapped in the brake line and thickness of the disc brake pad.
   Adjust and replace defective parts as required.
4. Return the carpet, etc.

## HYDRAULIC BRAKE BOOSTER (HBB) OPERATION CHECK <Vehicles with ABS>

**Caution**
**A diagnosis code may be stored when carrying out the checks. Always erase the diagnosis codes after the checks, and then check that any diagnosis code is output.**

**POWER SUPPLY SYSTEM FUNCTION AND OPERATION CHECK**

1. Turn the ignition switch to the LOCK (OFF) position. Depressurise the power supply system of the hydraulic brake booster (HBB) by depressing the brake pedal at least forty times until the pedal effort becomes high.
2. Check that the reservoir fluid level is at the MAX position.
3. Chock the wheels and release the parking brakes.
4. Turn the ignition switch ON, and measure how much time is elapsed after the pump motor starts until it stops.

   **Standard value: 20 - 80 seconds**
5. After the pump motor stopped, start the engine. The brake warning lamp should not be turned on.
6. Stop the engine, and then turn on the ignition switch again.

Purchased from www.WorkshopManuals.co.uk

www.WorkshopManuals.co.uk

7. When the brake pedal is depressed four or five times, the pump motor should start and then stop.
8. Depress the brake pedal four or five times again, and then measure how much time is elapsed after the pump motor starts until it stops.

   **Standard value: 2 - 11 seconds**
9. Depress the brake pedal fully consecutive 15 - 20 times for ten seconds. The brake warning lamp should illuminate and the buzzer should sound.

   **Caution**
   **Turn the ignition switch ON, and wait for at least 120 seconds before carrying out the checks.**

## SIMPLE INSPECTION OF HBB

1. Turn the ignition switch to LOCK (OFF) position. Depressurise the power supply system of the hydraulic brake booster (HBB) by depressing the brake pedal at least forty times until the pedal effort becomes high.
2. Depress the brake pedal, and turn the ignition switch ON. Then check the pedal. The pedal should be lowered. If no, the pedal is defective.

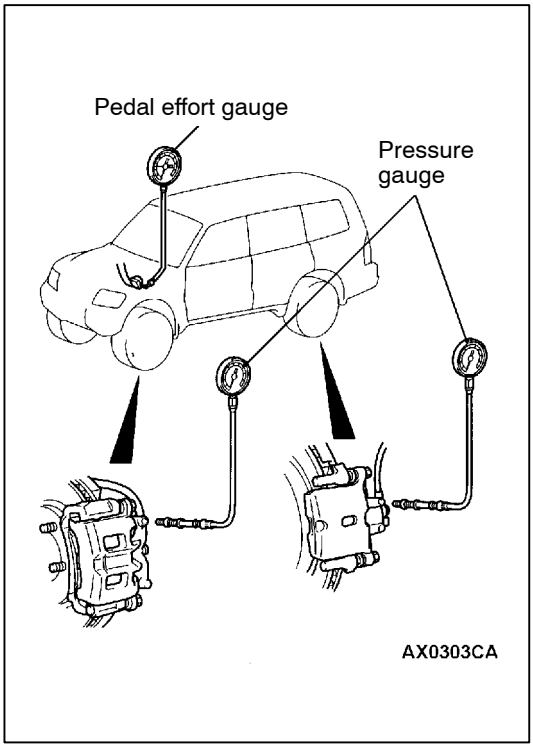


## CHECK USING SIMPLE TESTER

1. Turn the ignition switch to the LOCK (OFF) position. Depressurise the power supply system of the hydraulic brake booster (HBB) by depressing the brake pedal at least forty times until the pedal effort becomes high.
2. Connect a pressure gauge and pedal effort gauge as shown, and bleed air from the pressure gauge.
3. Carry out the operation test without vacuum assist as follows:
   (1) Turn the ignition switch to the LOCK (OFF) position. Depressurise the power supply system of the hydraulic brake booster (HBB) by depressing the brake pedal at least forty times until the pedal effort becomes high to observe the relationship between the pedal effort and the fluid pressure.

Purchased from www.WorkshopManuals.co.uk

www.WorkshopManuals.co.uk

**Standard value:**

| Pedal effort N | Fluid pressure at front wheels MPa | Fluid pressure at rear wheels MPa |
|---|---|---|
| 100 | 0.6 or more | 0 |
| 500 | 4.5 or more | 0 |

4. Carry out the operation test with power assist as follows:
   (1) Turn the ignition switch ON. Stop the pump motor, and then check the relationship between the pedal effort and the fluid pressure.

   **Standard value:**

| Pedal effort N | Fluid pressure at front wheels MPa | Fluid pressure at rear wheels MPa |
|---|---|---|
| 100 | 3.0 - 4.0 | 3.3 - 4.3 |
| 200 | 8.0 - 10.0 | 8.0 - 10.0 |
| 400 | 14.0 - 18.0 | 14.0 - 18.0 |
| 500 | 15.0 - 19.0 | 15.0 - 19.0 |

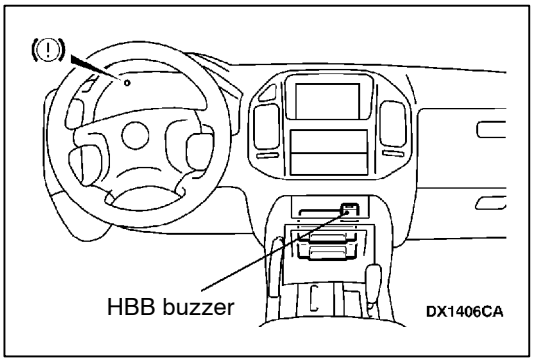


**BRAKE WARNING LAMP AND THE HBB BUZZER OPERATION CHECK**

**Caution**
**Turn the ignition switch ON, and wait for at least 120 seconds before carrying out the checks.**

1. Chock the wheels and start the engine.
2. Release the parking brake lever, and depress the brake pedal fully consecutive 15 - 20 times for ten seconds. The brake warning lamp should illuminate and the buzzer should sound.

Purchased from www.WorkshopManuals.co.uk

www.WorkshopManuals.co.uk

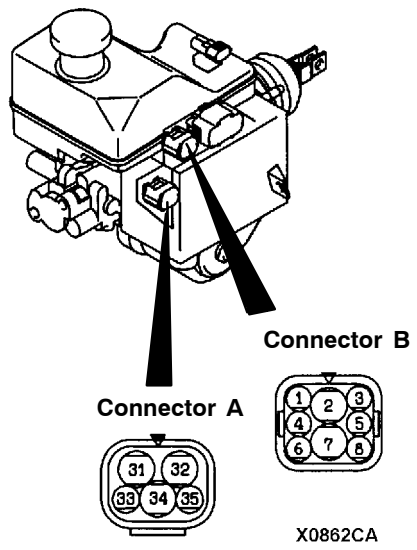


## HBB CHECK <Vehicles with ABS>

### CHECKING OF THE CONTINUITY AND RESISTANCE OF THE PUMP MOTOR

1. Disconnect the harness side connector.
2. Measure the continuity and resistance between the HBB side connector terminals.

| Terminal No. | | | | | | | | | Resistance between the terminals (reference value) |
|---|---|---|---|---|---|---|---|---|---|
| Connector A | | | Connector B | | | | | | |
| 31 | - | 32 | 2 | 4 | - | 6 | 7 | 8 | |
| ○ | Ⓜ | ○ | | | | | | | 10 Ω or less |
| | | | ○ | | Ⓜ | | ○ | | 10 Ω or less |
| ○ | | | ○ | | | | | | 0 Ω |
| | | ○ | | | | ○ | ○ | | 0 Ω |
| | | | ○ | | | | | ○ | Approx. 33 Ω |
| ○ | | | | | | | | ○ | Approx. 33 Ω |
| | | | | ○ | | ○ | | | Approx. 33 Ω |
| | | ○ | | ○ | | | | | Approx. 33 Ω |

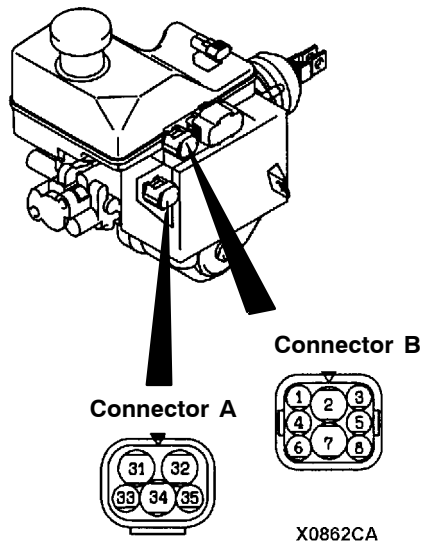


### PRESSURE SWITCH (FOR PUMP CONTROL) CHECK

1. Turn the ignition switch to LOCK (OFF) position. Depressurise the power supply system of the hydraulic brake booster (HBB) by depressing the brake pedal at least forty times until the pedal effort becomes high.
2. Disconnect connector A of the HBB.
3. Measure the continuity between the HBB side connector A terminal No.33 and No.35. The continuity should not be present.
4. Turn on the ignition switch and operate the pump motor with connector A disconnected. Measure the continuity between the HBB side connector A terminal No.33 and No.35 while the pump motor is running. The continuity should be present.
5. Erase the diagnosis codes.(Refer to P.35A-8.)

### PRESSURE SWITCH (FOR LOW PRESSURE WARNING) CHECK

1. Turn the ignition switch to the LOCK (OFF) position. Depressurise the power supply system of the hydraulic brake booster (HBB) by depressing the brake pedal at least forty times until the pedal effort becomes high.
2. Disconnect the HBB connector B.
3. Measure the continuity between the HBB side connector B terminals No.1 and No.5. The continuity should not be present.
4. Connect the HBB connector B to the harness side connector.
5. Then turn on the ignition switch, and operate the pump motor.
6. Wait until the pump motor stops, and then disconnect connector B of the HBB again.
7. Measure the continuity between the HBB side connector B terminals No.1 and No.5. The continuity should be present.

Purchased from www.WorkshopManuals.co.uk

www.WorkshopManuals.co.uk

8. Erase the diagnosis codes. (Refer to P.35A-8.)

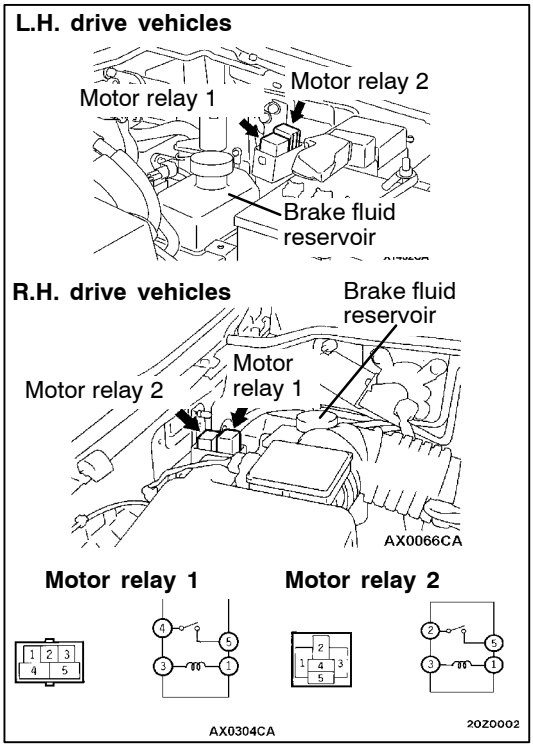


## HBB MOTOR RELAY CONTINUITY CHECK <Vehicles with ABS>

### Motor relay 1

| Battery voltage | Terminal No. | | | |
|---|---|---|---|---|
| | 1 | 3 | 4 | 5 |
| When current is not flowing | ○ | ○ | | |
| When current is flowing | ⊕ | ⊖ | ○ | ○ |

### Motor relay 2

| Battery voltage | Terminal No. | | | |
|---|---|---|---|---|
| | 1 | 2 | 3 | 5 |
| When current is not flowing | ○ | | ○ | |
| When current is flowing | ⊕ | ○ | ⊖ | ○ |

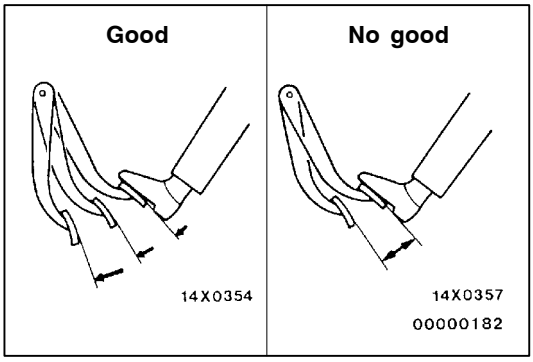


## BRAKE BOOSTER OPERATING TEST <Vehicles without ABS>

For simple checking of the brake booster operation, carry out the following tests:

1. Run the engine for one or two minutes, and then stop it.
   If the pedal depresses fully the first time but gradually becomes higher when depressed succeeding times, the booster is operating properly. If the pedal height remains unchanged, the booster is defective.

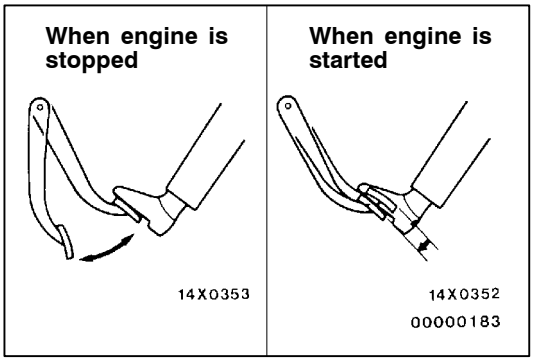


2. With the engine stopped, step on the brake pedal several times.
   Then start the engine while the brake pedal is stepped on.
   If the pedal moves downward slightly, the booster is in good condition. If there is no change, the booster is defective.

Purchased from www.WorkshopManuals.co.uk

www.WorkshopManuals.co.uk

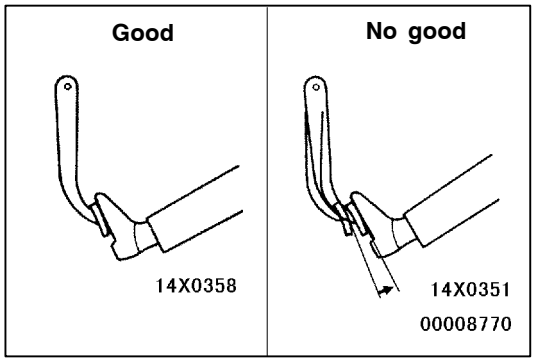


3. With the engine running, step on the brake pedal and then stop the engine.
   Hold the pedal depressed for 30 seconds. If the pedal height does not change, the booster is in good condition.
   If the pedal rises, the booster is defective.

If the above three tests are okay, the booster performance can be determined as good.
If one of the above three tests is not okay at least, the check valve, vacuum hose, or booster will be defective.

## CHECK VALVE OPERATION CHECK <Vehicles without ABS>

1. Remove the vacuum hose. (Refer to P.35A-41.)

   **Caution**
   **The check valve should not be disassembled from the vacuum hose as they are united as one part.**

2. Check the operation of the check valve by using a vacuum pump.

| Vacuum pump connection | Accept/reject criteria |
|---|---|
| Connection at the brake booster side (A) | A negative pressure (vacuum) is created and held. |
| Connection at the intake manifold side (B) | A negative pressure (vacuum) is not created. |

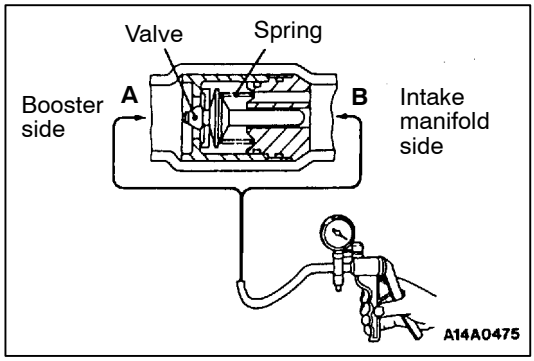


**Caution**
**If the check valve is defective, always replace it as an assembly unit together with the vacuum hose.**

## LOAD SENSING SPRING LENGTH CHECK AND ADJUSTMENT <Vehicles without ABS>

1. Park the vehicle on a level ground. The vehicle should be unloaded and supported only by wheels.

   **Caution**
   **Never support the vehicle with jacks or other similar means.**

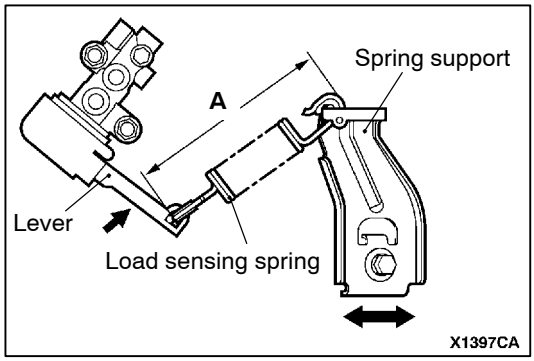


2. With the lever pressed all the way to the load sensing proportioning valve side, check whether or not the length (shown in the figure) of the spring (the length between its ends) is the standard value.

   **Standard value (A): 135 - 139 mm**

3. If the spring length is not within the standard value, loosen the bolt attaching the support and adjust the distance by moving the support.

Purchased from www.WorkshopManuals.co.uk

www.WorkshopManuals.co.uk

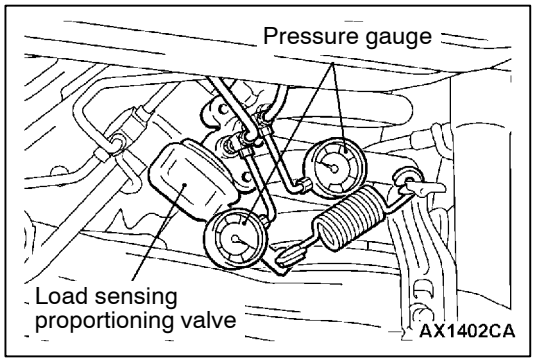


## LOAD SENSING PROPORTIONING VALVE FUNCTION TEST <Vehicles without ABS>

1. Connect pressure gauges to the input and output ports of the load sensing proportioning valve.
2. Bleed the system. (Refer to P.35A-29.)
3. Disconnect the spring at the support side.

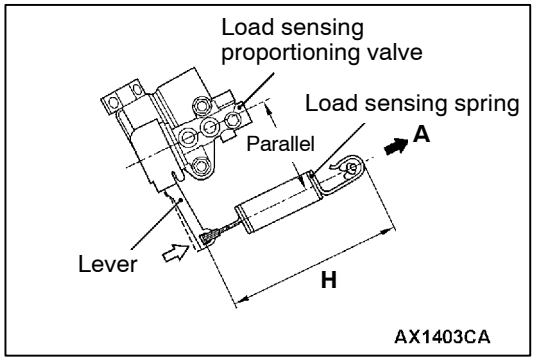


4. Place the spring so that it is in parallel with the load sensing proportioning valve, and then pull in the direction indicated by arrow A so that its length H shown in the figure (the length between its ends) is as noted below.

   NOTE
   At this time the lever is pressed all the way to the load sensing proportioning valve side.

5. Check at this time whether or not the output fluid's pressure, relative to the load sensing proportioning valve's input fluid pressure, is within the standard value.

   **Standard value:**

| Items | Spring length H mm | Input fluid pressure MPa | Output fluid pressure MPa |
|---|---|---|---|
| Short wheelbase | 133*1 | 9.8 | 4.9 - 5.9 |
| | 149*2 | 9.8 | 7.5 - 8.5 |
| | | 16.7 | 9.0 - 11.0 |
| Long wheelbase | 133*1 | 9.8 | 5.9 - 6.9 |
| | 149*2 | 9.8 | 9.3 - 10.3 |
| | | 16.7 | 11.4 - 13.4 |

   NOTE
   *1 and *2 indicate the applicable lengths for unladen and laden vehicles respectively.

6. After making the check, install the spring. Disconnect the pressure gauges from the load sensing proportioning valve and bleed air.

Purchased from www.WorkshopManuals.co.uk

www.WorkshopManuals.co.uk

## BLEEDING <Vehicles with ABS>

**Caution**

**Specified brake fluid: DOT3 or DOT4**

1. **Always use the specified brake fluid. Avoid using a mixture of the specified brake fluid and other fluid.**
2. **Maintain the fluid reservoir level between the MIN and MAX marks during the air bleeding.**
3. **Do not depress the brake pedal hard during the air bleeding (normal air bleeding) to prevent the pump motor from operating frequently.**
4. **After the air bleeding, check that the brake dragging does not become stronger.**
5. **If the pedal is depressed with the reservoir cap removed, the brake fluid may overflow. Do not depress the brake pedal while the fluid is being added.**

### NORMAL AIR BLEEDING

After the front brake or the rear brake is removed and installed, some fluid may remain in the hydraulic brake booster (HBB) reservoir. In this case, bleed air from the brake caliper.

### HBB SYSTEM AIR BLEEDING

If all the brake fluid inside the reservoir is drained due to the removal and installation of the HBB, bleed air as follows:

**Air bleeding from front brake system**

1. Turn the ignition switch to the LOCK (OFF) position. Bleed air from the front brake calipers (right and left) by pumping the brake pedal.

**Pump motor operation**

2. Turn the ignition switch ON, and operate the pump motor. If the pump motor is running free, supply the brake fluid into the pump motor by depressing the brake pedal three or four times.

**Air bleeding from accumulator system**

3. After the pump motor stopped, depress the brake pedal three or four times with the ignition switch ON. Then observe the brake fluid in the reservoir. If the brake fluid looks whitish, wait for a few minutes until it becomes clear.
4. Repeat step 3 until the brake fluid becomes clear.

Purchased from www.WorkshopManuals.co.uk

www.WorkshopManuals.co.uk

**Air bleeding from rear brake system**

5. While the ignition switch is turned ON and the brake pedal is depressed, bleed air from the right and left rear brake calipers.

   **Caution**
   **(1) If too much brake fluid is drained at a time, the accumulator pressure may be dropped abnormally. So limit drain amount at a time to 100 $cm^3$ or less, and check that the pump motor stops per one air-bleeding.**
   **(2) If the brake fluid level in the reservoir has been dropped, air may enter the pump motor accidentally. To avoid this, always maintain the brake fluid between the MIN and MAX marks.**

**Air bleeding from power supply system**

6. Turn the ignition switch to the LOCK (OFF) position. Depressurise the HBB power supply system by depressing the brake pedal several times until the braking effort becomes high.
7. Turn the ignition switch ON, and depress the brake pedal quickly twenty times. Then check that the pump motor stops.
8. Turn the ignition switch to the LOCK (OFF) position. Depressurise the power supply system of the hydraulic brake booster (HBB) by depressing the brake pedal until the pedal effort becomes high.
9. Then turn the ignition switch ON, and then operate the pump motor. The pump motor should stop within 25 seconds. If the pump motor does not stop, bleed air from the power supply system again (see steps 6 - 9).

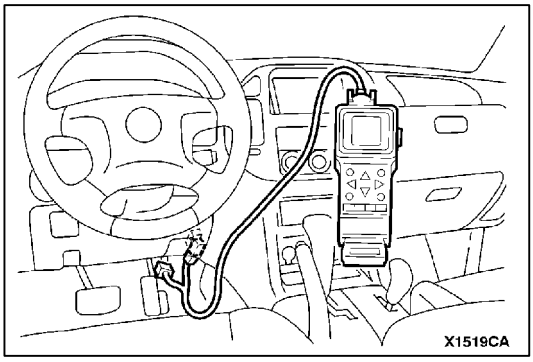


**Air bleeding from ABS system**

10. Turn the ignition switch to the LOCK (OFF) position, and connect the MUT-II to the diagnosis connector.

    **Caution**
    **Turn the ignition switch to the LOCK (OFF) position when connecting and disconnecting the MUT-II.**

11. Turn the ignition switch ON, and then select the menu display on the MUT-II as follows:
    "ABS/ASC" to "ACTUATOR TEST" to "AIR BLEEDING(1)"
12. While the ignition switch is turned ON and the brake pedal is depressed, carry out the actuator test "AIR BLEEDING(1)."

    **Caution**
    **If you carry out the "AIR BLEEDING (1)" repeatedly, wait for at least twenty seconds before the second operation.**

13. Then select "AIR BLEEDING (2)" on the MUT-II menu display, and carry out the "AIR BLEEDING(2)" while the ignition switch is turned ON and the brake pedal is depressed.

Purchased from www.WorkshopManuals.co.uk

www.WorkshopManuals.co.uk

**Air bleeding from rear brake system (final stage)**

14. Bleed air from the rear brake calipers completely while the ignition switch is turned ON and the brake pedal is depressed.

    **Caution**

    **(1) If too much brake fluid is drained at a time, the accumulator pressure may be dropped abnormally. So limit drain amount at a time to 100 $cm^3$ or less, and check that the pump motor stops per one air-bleeding.**

    **(2) If the brake fluid level in the reservoir has been dropped, air may enter the pump motor accidentally. To avoid this, always maintain the brake fluid between the MIN and MAX marks.**

**Air bleeding from front brake system (final stage)**

15. Operate the pump motor while the ignition switch is turned ON. Bleed air from the front brake calipers completely by pumping the brake pedal.

**Adding brake fluid**

16. Turn the ignition switch to the LOCK (OFF) position. Depressurise the power supply system of the hydraulic brake booster (HBB) by depressing the brake pedal at least forty times until the pedal effort becomes high.
17. Add the brake fluid up to the MAX mark on the reservoir.

## BLEEDING <Vehicles without ABS>

**Caution**

**Specified brake fluid: DOT3 or DOT4**
**Always use the specified brake fluid. Avoid using a mixture of the specified brake fluid and other fluid.**

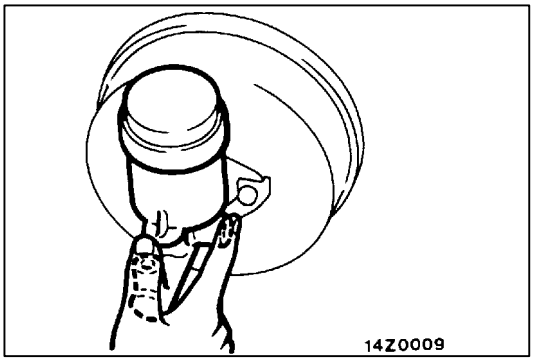


### MASTER CYLINDER BLEEDING

The master cylinder used has no check valve, so if bleeding is carried out by the following procedure, bleeding of air from the brake pipeline will become easier. (When brake fluid is not contained in the master cylinder.)

1. Fill the reserve tank with brake fluid.
2. Keep the brake pedal depressed.
3. Have another person cover the master cylinder outlet with a finger.
4. With the outlet still closed, release the brake pedal.

Purchased from www.WorkshopManuals.co.uk

www.WorkshopManuals.co.uk

5. Repeat steps 2 - 4 three or four times to fill the inside of the master cylinder with brake fluid.

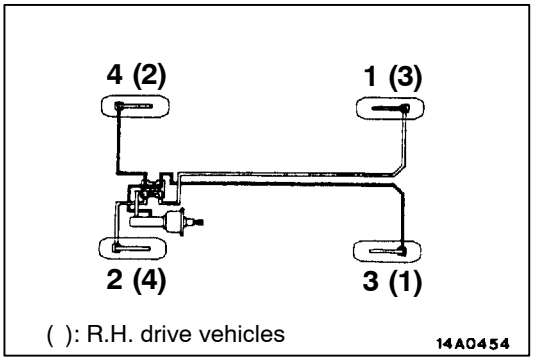


**BRAKE PIPE LINE BLEEDING**

Bleed the air in the sequence shown in the figure.

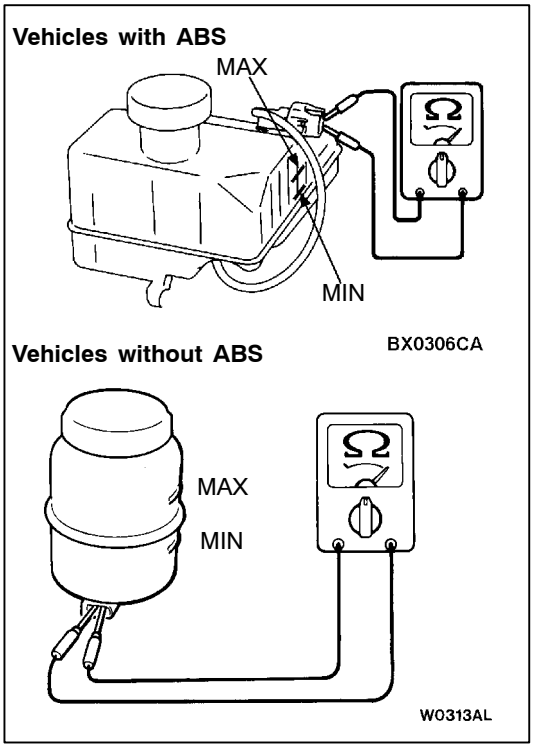


## BRAKE FLUID LEVEL SENSOR CHECK

The brake fluid level sensor is in good condition if there is no continuity when the float surface is above “MIN” and if there is continuity when the float surface is below “MIN”.

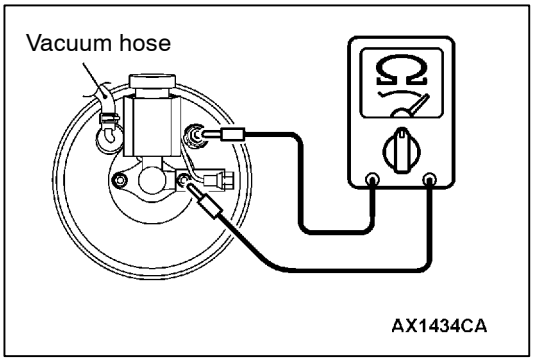


## BRAKE BOOSTER VACUUM SWITCH CHECK <Vehicles with 4D5 engine>

1. Connect an ohmmeter to the connector of the vacuum switch.
2. Start the engine and check for continuity when the vacuum hose is connected and when it is disconnected.
   The vacuum switch is in good condition if there is no continuity when the vacuum hose is connected, and if there is continuity when it is not connected.
3. Disconnect the spring at the support side.

Purchased from www.WorkshopManuals.co.uk

www.WorkshopManuals.co.uk

## DISC BRAKE PAD CHECK AND REPLACEMENT

NOTE
The brake pads have wear indicators that contact the brake disc when the brake pad thickness reaches approximately 2 mm and emit a squealing sound to warn the driver.

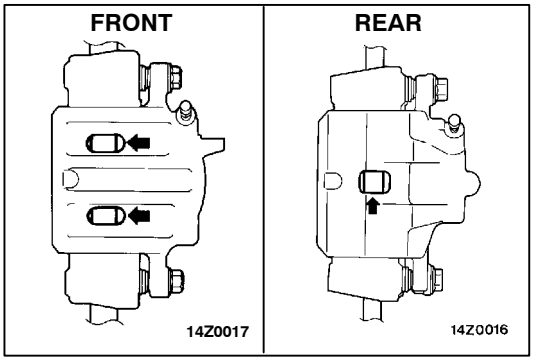


1. Check the brake pad thickness through the caliper body check port.

   **Standard value: 10.0 mm**

   **Limit: 2.0 mm**

2. When the thickness is less than the limit, always replace the pads at an axle set.

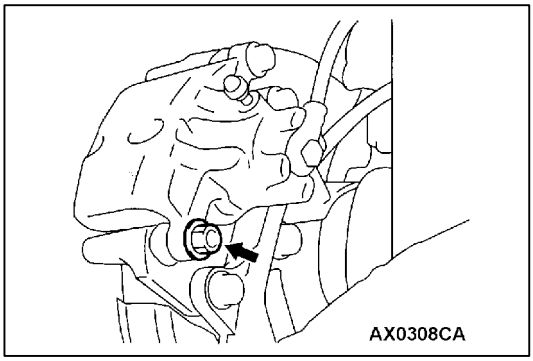


3. Remove the guide lock pin bolt. Pivot the caliper assembly and hold it with wires.

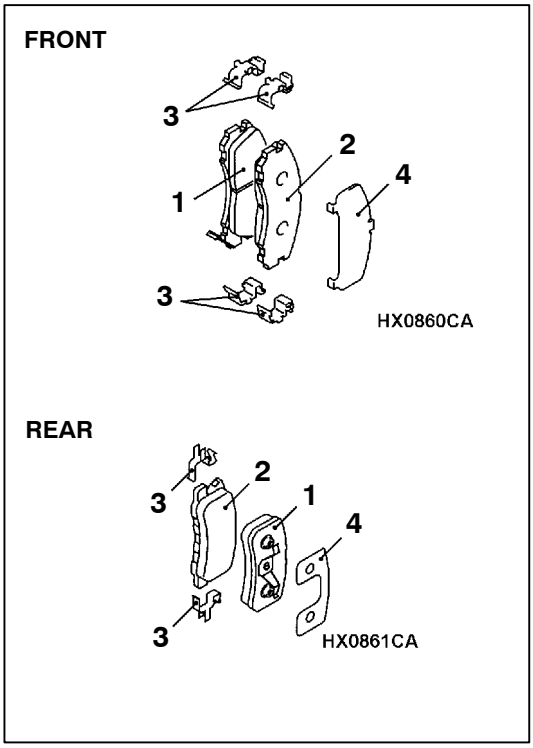


4. Remove the following parts from the caliper support.
   1. Pad and wear indicator assembly <front>
      Pad and clip assembly <rear>
   2. Pad assembly
   3. Clip
   4. Shim
5. In order to measure the brake drag force after pad installation, measure the rotary-sliding resistance of the hub with the pads removed. (Refer to P.35A-44, 49.)
6. Install the pads and caliper assembly, and then check the brake drag force. (Refer to P.35A-45, 50.)

Purchased from www.WorkshopManuals.co.uk

www.WorkshopManuals.co.uk

## DISC BRAKE ROTOR CHECK

**Caution**

**When servicing disc brakes, it is necessary to exercise caution to keep the disc brakes within the allowable service values in order to maintain normal brake operation.**

Before re-finishing or re-processing the brake disc surface, the following conditions should be checked.

| Inspection items | Remarks |
|---|---|
| Scratches, rust, saturated lining materials and wear | • If the vehicle is not driven for a certain period, the sections of the discs that are not in contact with lining will become rusty, causing noise and shuddering.<br>• If grooves resulting from excessive disc wear and scratches are not removed prior to installing a new pad assembly, there will momentarily be inappropriate contact between the disc and the lining (pad). |
| Run-out or drift | Excessive run-out or drift of the discs will increase the pedal depression resistance due to piston knock-back. |
| Change in thickness (parallelism) | If the thickness of the disc changes, this will cause pedal pulsation, shuddering and surging. |
| Inset or warping (flatness) | Overheating and improper handling while servicing will cause inset or warping. |

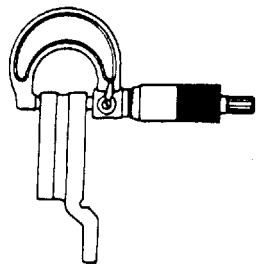


## BRAKE DISC THICKNESS CHECK

1. Using a micrometer, measure disc thickness at eight positions, approximately 45° apart and 10 mm in from the outer edge of the disc.

   **Brake disc thickness**

   | Item | Standard value | Limit |
   |---|---|---|
   | Front | 26.0 | 24.4 |
   | Rear | 22.0 | 20.4 |

   Thickness variation (at least 8 positions)
   The difference between any thickness measurements should not be more than 0.015 mm.
2. If the disc is beyond the limits for thickness, remove it and install a new one. If thickness variation exceeds the specification, replace the brake disc or grind it with on-the-car type brake lathe (“MAD, DL-8700PF” or equivalent).

Purchased from www.WorkshopManuals.co.uk

www.WorkshopManuals.co.uk

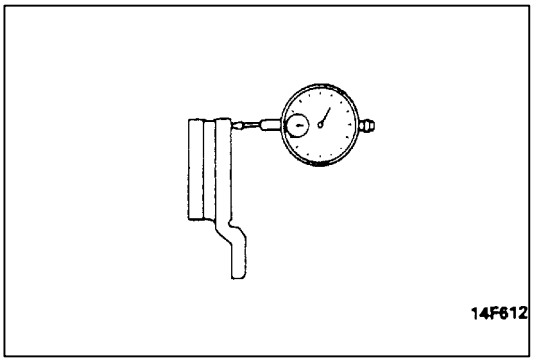


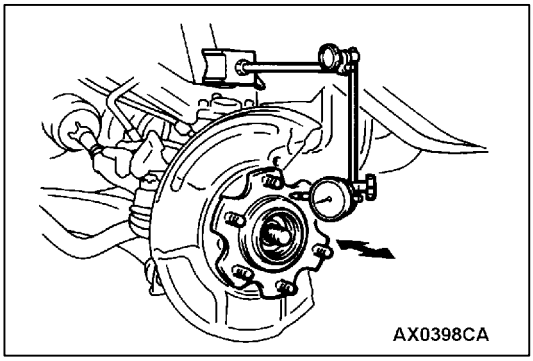


## BRAKE DISC RUN-OUT CHECK AND CORRECTION

1. Remove the brake assembly, and then hold it with wire.
2. Place a dial gauge approximately 5 mm from the outer circumference of the brake disc, and measure the run-out of the disc.

   **Limit: 0.06 mm or less**

3. If the brake disc run-out exceeds the limit, correct it as follows:
   (1) Chalk phase marks on the wheel stud and the brake disc, which run-out is excessive as shown.
   (2) Remove the brake disc. Then place a dial gauge as shown, and measure the end play by pushing and pulling the wheel hub.

   **Limit: <Front> 0 mm, <Rear> 0 mm**

   (3) If the end play exceeds the limit, disassemble the hub and knuckle assembly to check each part.
   (4) If the end play does not exceed the limit, dephase the brake disc and secure it. Then recheck the brake disc run-out.

4. If the run-out cannot be corrected by changing the phase of the brake disc, replace the brake disc or grind it with the on-the-car type brake lathe ( “MAD, DL-8700PF” or equivalent).

Purchased from www.WorkshopManuals.co.uk

www.WorkshopManuals.co.uk

# BRAKE PEDAL

## REMOVAL AND INSTALLATION

**Post-installation Operaion**
Brake Pedal Adjustment (Refer to P.35A-19.)

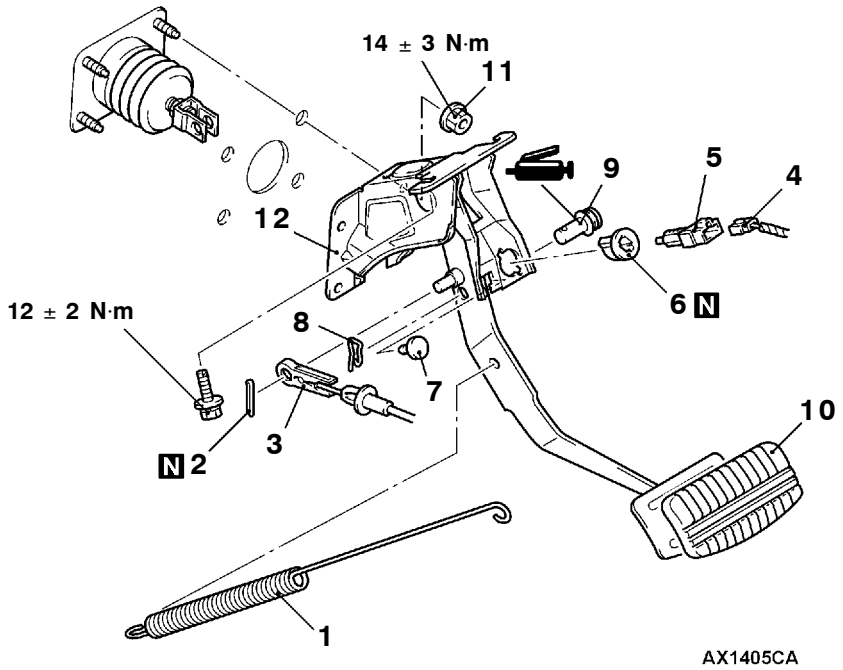


**Removal steps**

- Instrument panel lower panel (Refer to GROUP 52A.)

1. Return spring
2. Split pin <A/T>
3. Shift lock cable connection <A/T>
4. Harness connector
5. Stop lamp switch
6. Adjuster
7. Pedal stopper
8. Snap pin
9. Pin assembly
10. Pedal pad
11. Brake booster mounting nuts

▶A◀ 12. Brake pedal and pedal support member

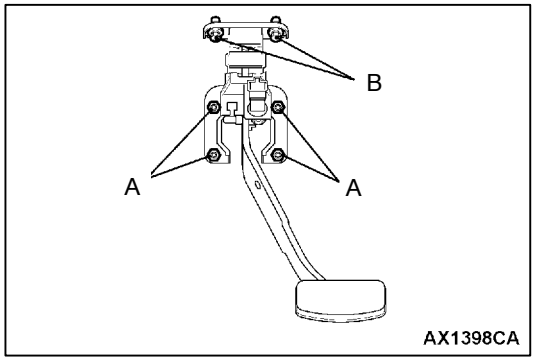


## INSTALLATION SERVICE POINT

### ▶A◀ BRAKE PEDAL AND PEDAL SUPPORT MEMBER INSTALLATION

Tighten the brake booster mounting nuts (A), and then the brake pedal mounting bolts (B).

NOTE
The pedal support member can not be positioned correctly if the pedal mounting bolts (B) are tightened first as the their holes are oblong holes.

Purchased from www.WorkshopManuals.co.uk

www.WorkshopManuals.co.uk

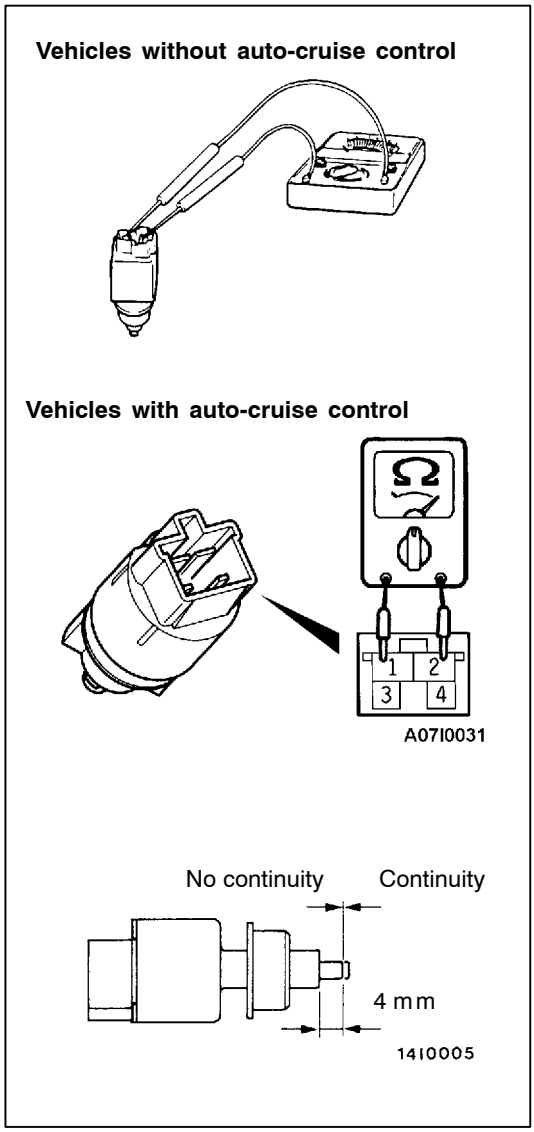


## INSPECTION

### STOP LAMP SWITCH CHECK

1. Connect an ohmmeter between the stop lamp switch connector terminals.
2. There should be no continuity between the terminals when the plunger is pushed in as shown. There should be continuity when it is released.

Purchased from www.WorkshopManuals.co.uk

www.WorkshopManuals.co.uk

# HYDRAULIC BRAKE BOOSTER (HBB) <Vehicles with ABS>

## REMOVAL AND INSTALLATION

**Caution**
**Do not turn the ignition switch ON before the brake fluid has been refilled to prevent the HBB pump motor from damage.**

**Pre-removal Operation**
- Depressurise the Brake Fluid in the Power Supply System
  (Depress the brake pedal at least forty times when the ignition switch is turned to "LOCK"(OFF) position)
- Brake Fluid Draining

**Post-installation Operations**
- Brake Pedal Adjustment (Refer to P.35A-19.)
- Brake Fluid Supplying and Bleeding (Refer to P.35A-27.)
- Checking the Function and Operation of the HBB Power Supply System (Refer to P.35A-20.)

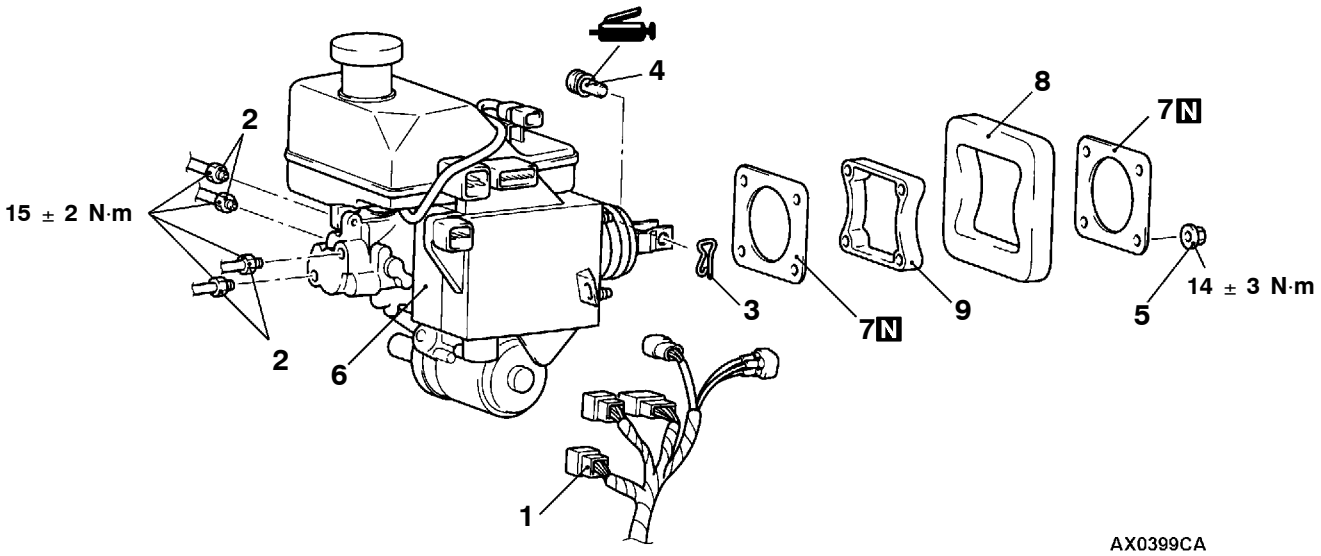


**Removal steps**
- Battery <L.H. drive vehicles>
- Air intake hose, and air cleaner <R.H. drive vehicles> (Refer to GROUP 15.)

1. Harness connector
2. Brake pipe connection
3. Snap pin

◀A▶ ▶A◀

4. Pin assembly
5. HBB mounting nuts
6. HBB
7. Seal
8. Insulator <4M4>
9. Spacer

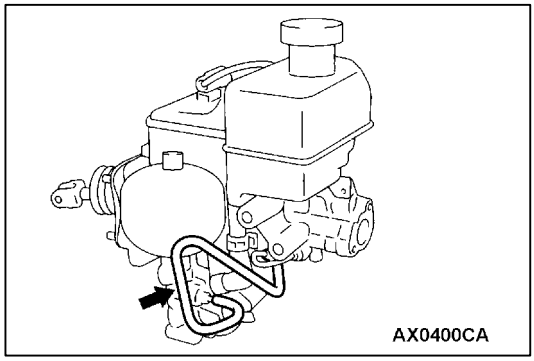


## REMOVAL SERVICE POINT

### ◀A▶ HBB REMOVAL

**Caution**
**Never bend the shown tube as it is under high pressure.**

Purchased from www.WorkshopManuals.co.uk

www.WorkshopManuals.co.uk

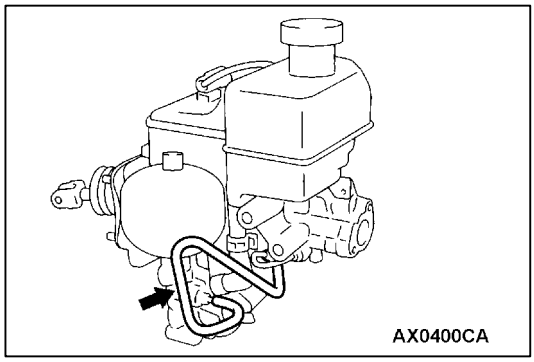


## INSTALLATION SERVICE POINT

**▶A◀ HBB INSTALLATION**

**Caution**
**Never bend the shown tube as it is under high pressure.**

Purchased from www.WorkshopManuals.co.uk

www.WorkshopManuals.co.uk

## DISASSEMBLY AND REASSEMBLY

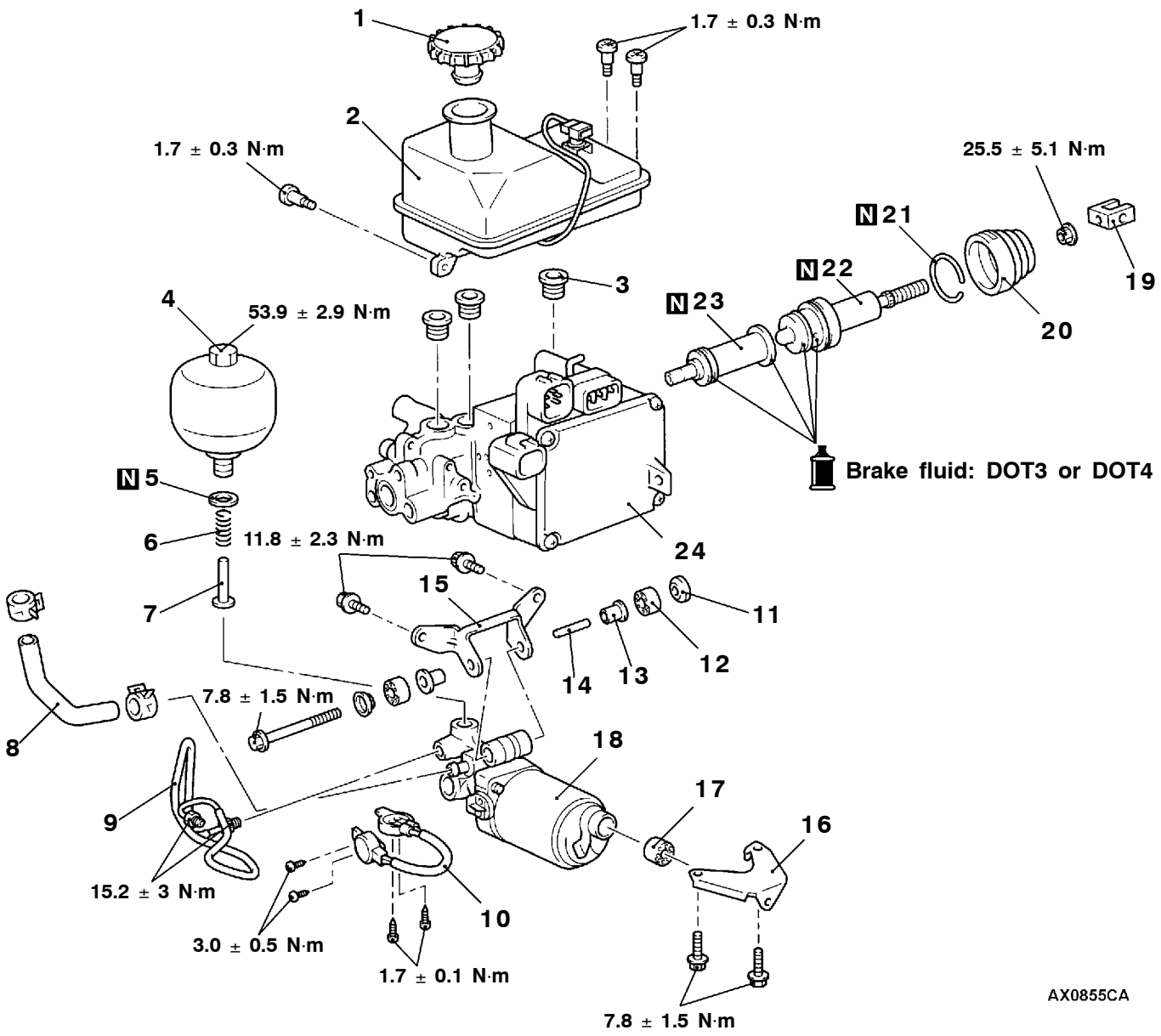


**Disassembly steps**

1. Filler cap
2. Reservoir assembly
3. Grommet
4. Accumulator
5. O-ring
6. Spring
7. Silencer tube
8. Hose
9. Tube
10. Lead wire
11. Washer
12. Bushing
13. Collar
14. Pin
15. Bracket
16. Bracket
17. Bushing
18. Pump motor
19. Clevis
20. Boot
    - ◀A▶ Holding the HBB
21. ◀B▶ Snap ring
22. ◀B▶ Power piston assembly
23. ◀B▶ Master cylinder piston assembly
24. Master cylinder and hydraulic unit assembly

Purchased from www.WorkshopManuals.co.uk

www.WorkshopManuals.co.uk

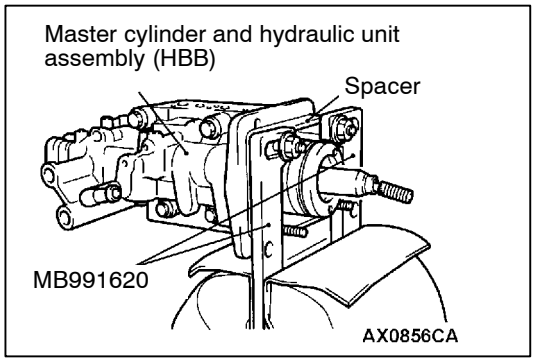


## DISASSEMBLY SERVICE POINTS

### ◀A▶ HOLDING THE HBB

Use the special tools and the spacer to hold the HBB as shown.

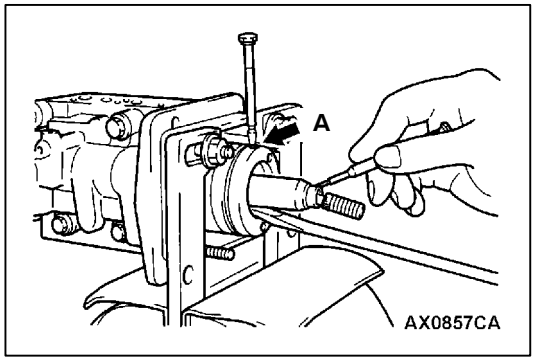


### ◀B▶ SNAP RING, POWER PISTON ASSEMBLY AND MASTER CYLINDER PISTON ASSEMBLY REMOVAL

1. Push in the push rod of the power piston assembly, and then use a small flat-tipped screwdriver to remove the snap ring.

   NOTE
   If the snap ring can not be released easily, use a pin to push the snap ring out of the cylinder body hole (A).

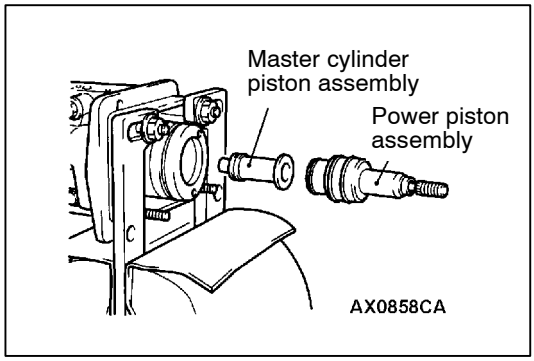


2. Withdraw the power piston assembly and the master cylinder piston assembly squarely from the cylinder body.

   **Caution**
   **Do not damage the cylinder wall.**

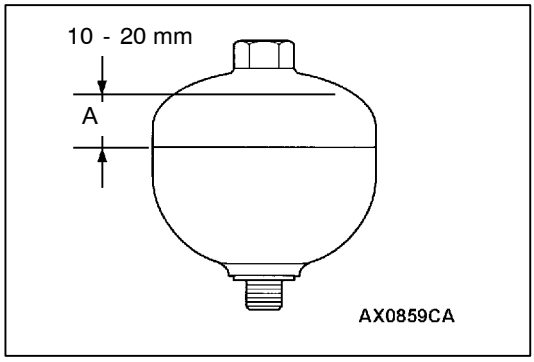


## ACCUMULATOR DISPOSAL

Use a saw to punch hole around (A) range of the accumulator, and discharge the gas.

**Caution**

1. **Cover the saw with a rag as metal particles may fly out.**
2. **Slowly and steadily carry out the work.**

NOTE
The gas is an odorless, colorless and harmless (nitrogen gas).

Purchased from www.WorkshopManuals.co.uk

www.WorkshopManuals.co.uk

# HBB BUZZER <Vehicles with ABS>

## REMOVAL AND INSTALLATION

**Pre-removal Operation**
Indicator panel and lower center panel removal (Refer to GROUP 52A - Floor Console.)

**Post-installation Operations**
- Indicator panel and lower center panel installation (Refer to GROUP 52A - Floor Console.)
- HBB buzzer operation check (Refer to P.35A-22.)

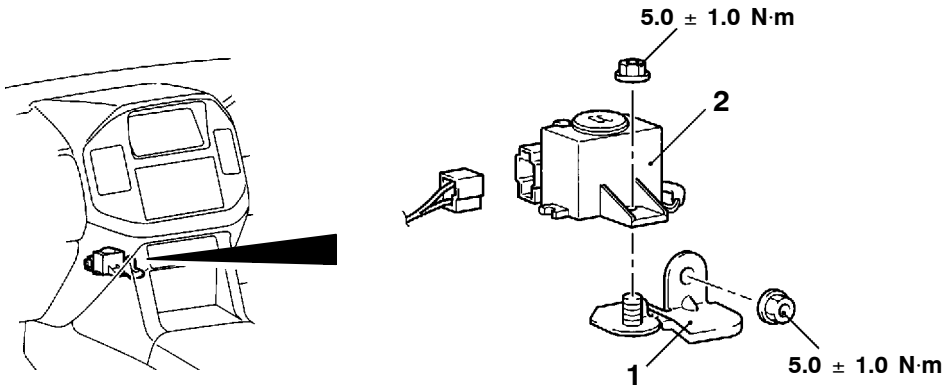


AX0407CA

**Removal steps**
1. Bracket
2. HBB buzzer

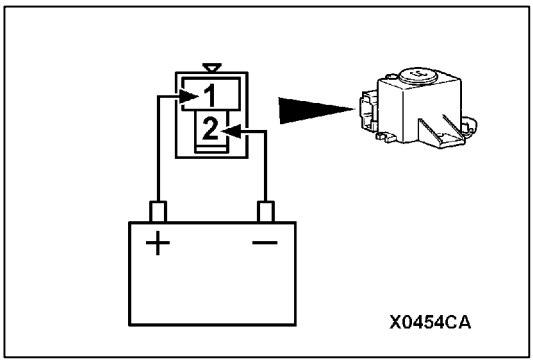


X0454CA

## INSPECTION

### HBB BUZZER CHECK

The buzzer should sound when the battery is connected as shown.

Purchased from www.WorkshopManuals.co.uk

www.WorkshopManuals.co.uk

# MASTER CYLINDER AND BRAKE BOOSTER <Vehicles without ABS>

## REMOVAL AND INSTALLATION

**Pre-removal Operation**
- Battery Removal <L.H. drive vehicles>
- Air Intake Hose and Air Cleaner Removal <R.H. drive vehicles> (Refer to GROUP 15.)
- Brake Fluid Draining

**Post-installation Operation**
- Brake Fluid Supplying and Air Bleeding (Refer to P.35A-29.)
- Brake Pedal Adjustment (Refer to P.35A-19.)
- Battery Installation <L.H. drive vehicles>
- Air Intake Hose and Air Cleaner Installation <R.H. drive vehicles> (Refer to GROUP 15.)

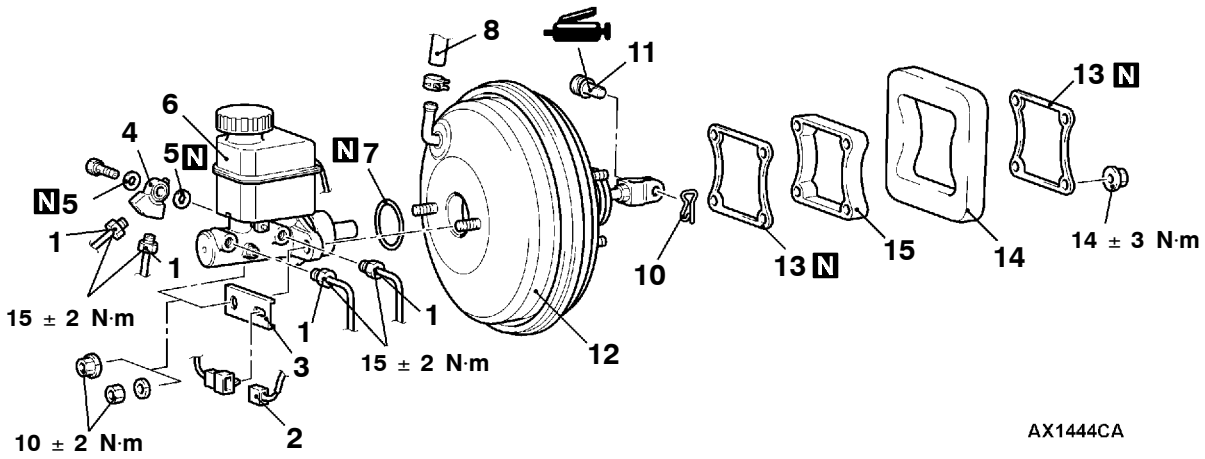


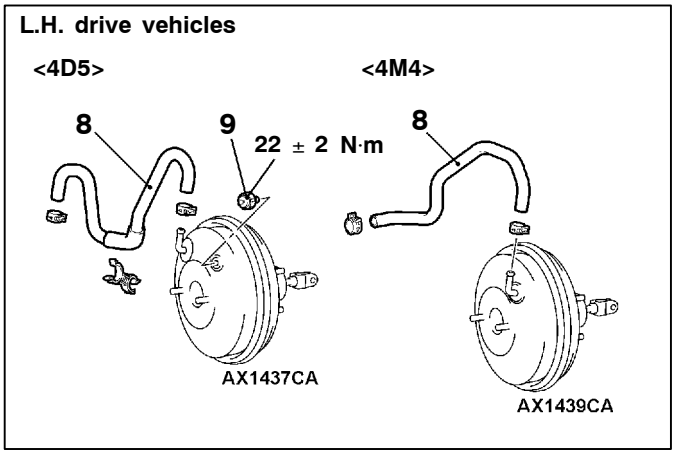


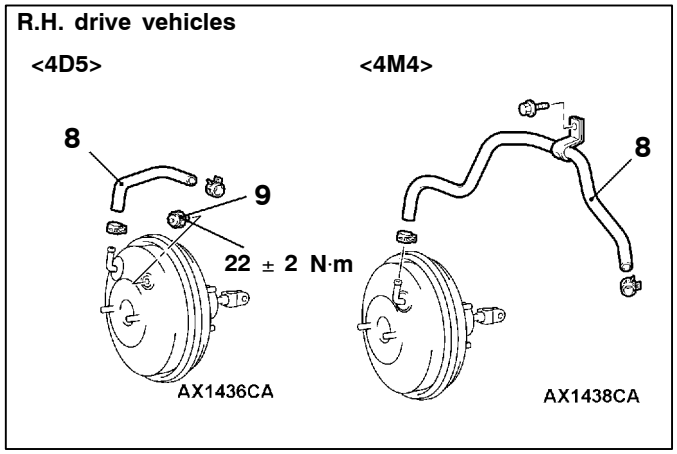


**Master cylinder removal steps**

1. Brake pipe connection
2. Brake fluid level sensor connector
3. Bracket
4. Connector
5. Gasket
6. Master cylinder
7. O ring

**Brake booster removal steps**

1. Brake pipe connection
2. Brake fluid level sensor connector
3. Bracket
4. Connector
5. Gasket
6. Master cylinder
7. O ring

▶B◀ ● Clearance adjustment between brake booster push rod and primary piston

▶A◀ 8. Vacuum hose (With built-in check valve)

9. Vacuum switch <4D5>
10. Snap pin
11. Pin assembly
12. Brake booster
13. Sealer
14. Insulator <4M4>
15. Spacer

Purchased from www.WorkshopManuals.co.uk

www.WorkshopManuals.co.uk

## INSTALLATION SERVICE POINTS

### ▶A◀ VACUUM HOSE CONNECTION

Insert the vacuum hose to the brake booster with its paint mark facing forward, and then secure the hose by using the hose clip.

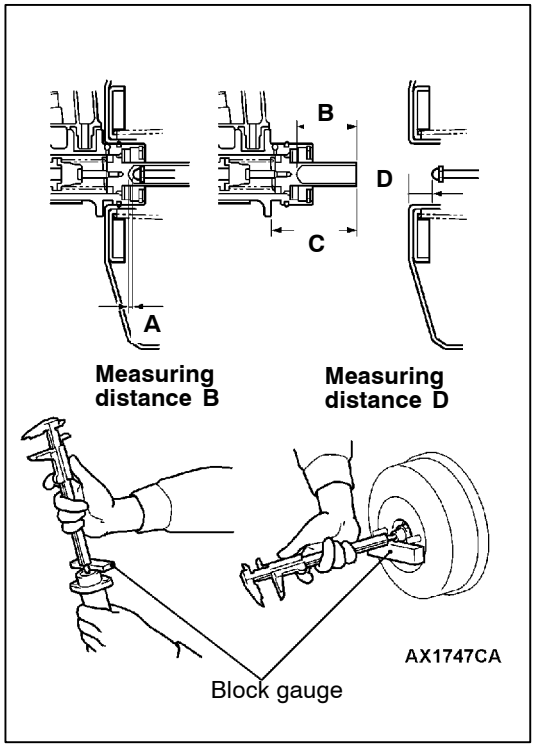


### ▶B◀ CLEARANCE ADJUSTMENT BETWEEN BRAKE BOOSTER PUSH ROD AND PRIMARY PISTON

1. Caluculate clearance A from the B, C and D measurements.
   A = B - C + D

   **Standard value (A) :**
   **<6G7> 0.5 – 0.9 mm**
   **<4D5, 4M4> 0.8 - 1.2 mm**

   NOTE
   (2) When a negative pressure of 66.7 kPa is applied to the brake booster, the clearance value will become 0.10 - 0.50 mm. <6G7>
   (3) When a negative pressure of 93.3 kPa is applied to the brake booster, the clearance value will become 0.10 - 0.50 mm. <4D5, 4M4>

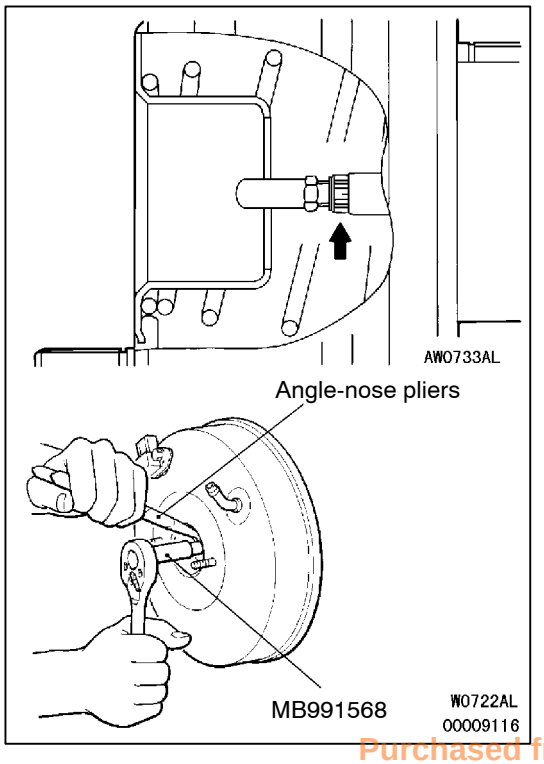


2. If the clearance is not within the standard value range, adjust by changing the push rod length by turning the push rod. Use the special tool to turn the push rod while holding the rod spline with angle-nose pliers.

Purchased from www.WorkshopManuals.co.uk

www.WorkshopManuals.co.uk

## MASTER CYLINDER
## DISASSEMBLY AND REASSEMBLY

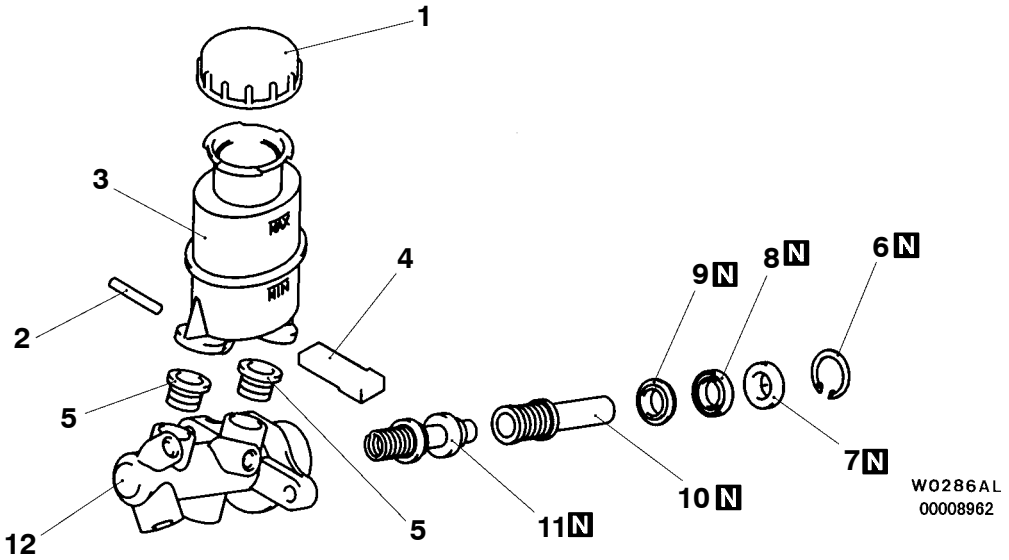


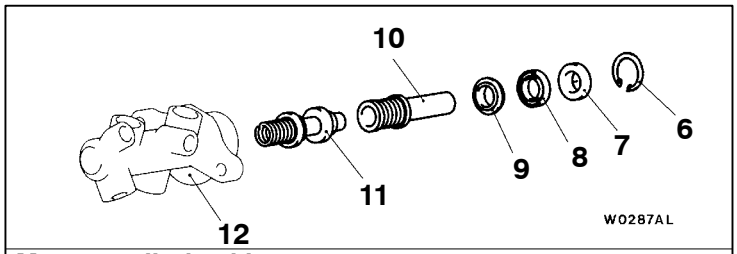

Master cylinder kit

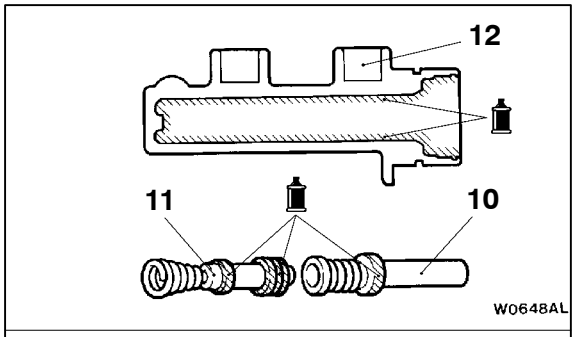

Brake fluid: DOT3 or DOT4

**Disassembly steps**

1. Reservoir cap
2. Pin
3. Reservoir tank
4. Brake fluid level sensor
5. Reservoir seal
6. ◀A▶ Stopper ring
7. Piston guide
8. Cylinder cup
9. Plate
10. Primary piston assembly
11. Secondary piston assembly
12. Master cylinder body

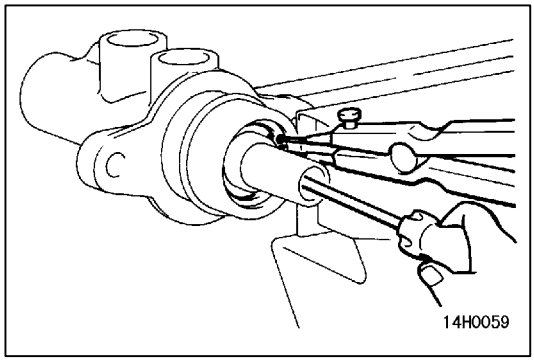


## DISASSEMBLY SERVICE POINT

### ◀A▶ STOPPER RING REMOVAL

Push the primary piston assembly and remove the stopper ring.

Purchased from www.WorkshopManuals.co.uk

www.WorkshopManuals.co.uk

# FRONT DISC BRAKE

## REMOVAL AND INSTALLATION

**Pre-removal Operation**
Brake Fluid Draining

**Post-installation Operation**
Brake Fluid Supplying and Air Bleeding
(Refer to P.35A-27, 29.)

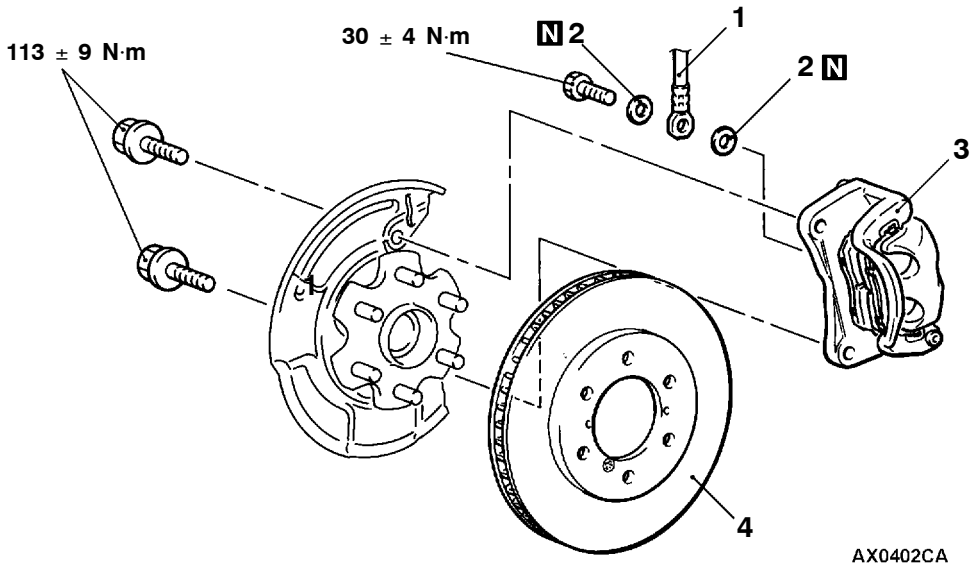


**Removal steps**

1. Brake hose connection
2. Gasket
3. ▶A◀ Disc brake assembly
4. Brake disc

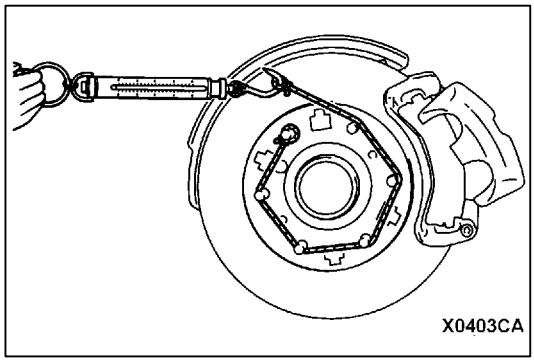


## INSTALLATION SERVICE POINT

### ▶A◀ DISC BRAKE ASSEMBLY INSTALLATION

1. Use a spring balance to measure the hub rotation resistance by turning the hub to the forward direction with the pad removed in order to measure the brake dragging force.
2. Install the caliper support to the knuckle, and then assemble the pad clip and the pad to the caliper support.

   **Caution**
   **Do not contaminate the friction surfaces of the pads and brake discs by any oil or grease.**

Purchased from www.WorkshopManuals.co.uk

www.WorkshopManuals.co.uk

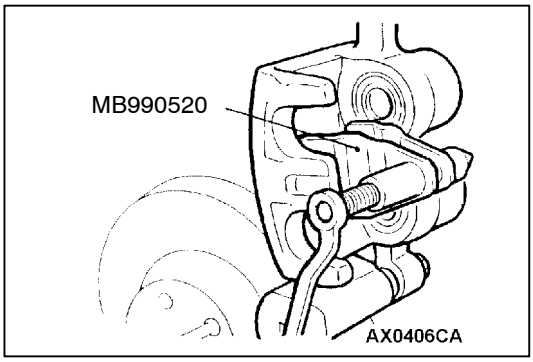


3. Clean the piston and insert it into the cylinder with the special tool.
4. Be careful that the piston boot does not become caught, when lowering the caliper assembly and install the guide pin to the caliper.
5. Start the engine, and then depress the brake pedal two or three times strongly. Then stop the engine.
6. Turn the brake disc forward 10 times.

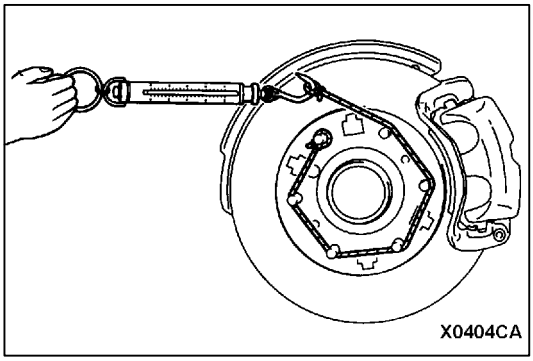


7. Use a spring balance to measure the rotary-sliding resistance of the hub.
8. Calculate the drag force of the disc brake [difference between the values measured at steps 1 and 7].

   **Standard value: 55 N**
9. If that drag force exceeds the standard value, disassemble the piston assembly. Then check the piston for contamination or rust, and confirm if the piston or the piston seal is deteriorated, and if the lock pin and the guide pin slide smoothly.

Purchased from www.WorkshopManuals.co.uk

www.WorkshopManuals.co.uk

## DISASSEMBLY AND REASSEMBLY

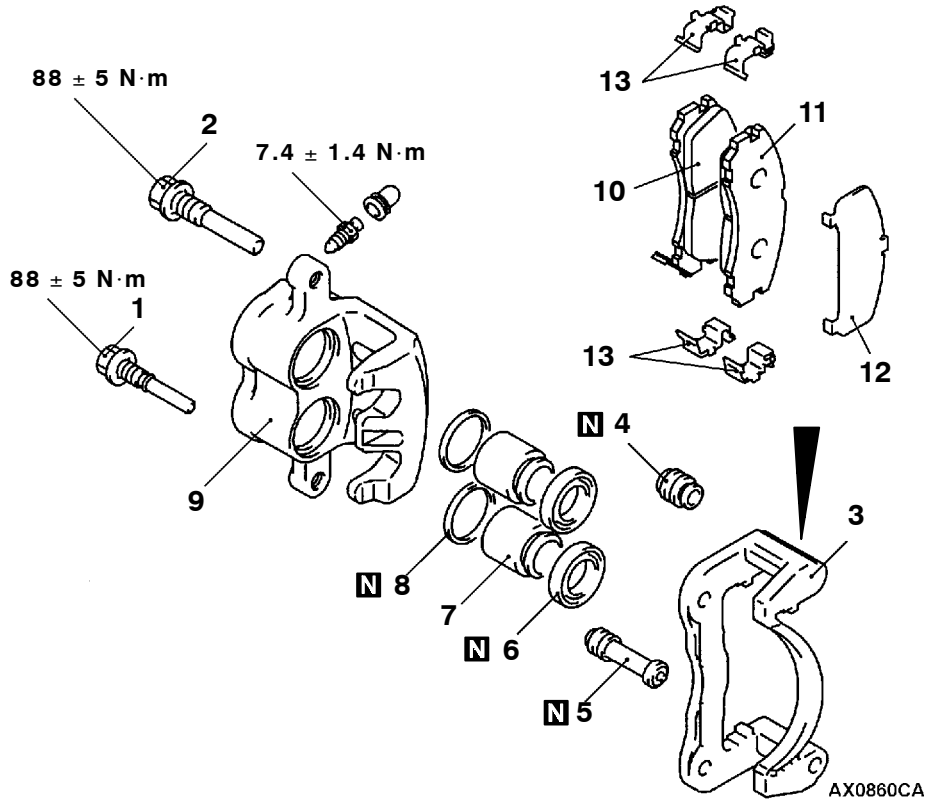


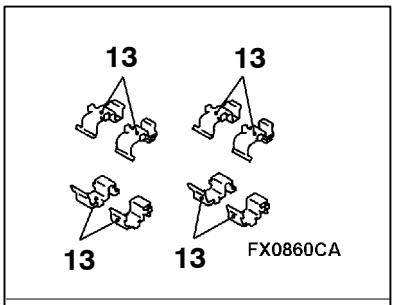


Clip kit

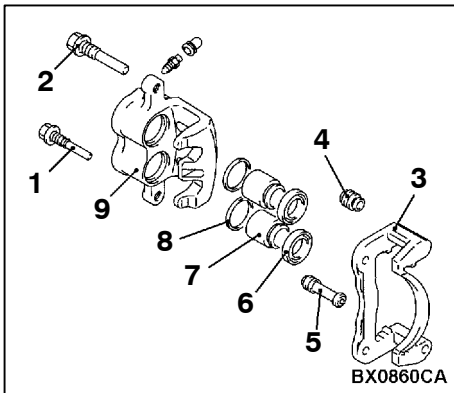


Brake caliper kit

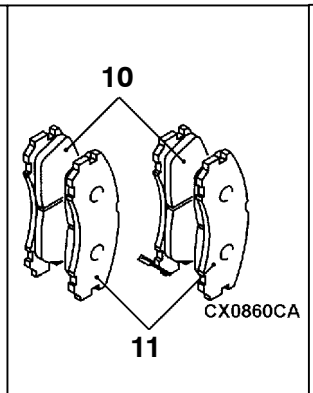


Pad set

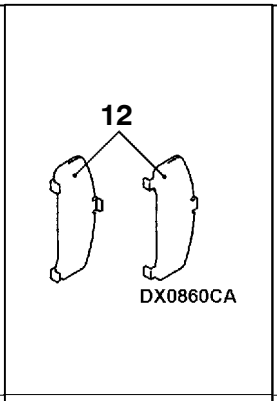


Shim kit

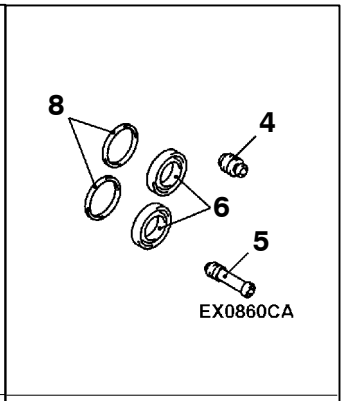


Seal and boot kit

**Disassembly steps**

1. Guide pin lock bolt
2. Guide pin
3. Caliper support (including pad, clip and shim)
4. Boot
5. Bushing
6. Piston boot ◀A▶
7. Piston ◀A▶
8. Piston seal ◀B▶
9. Caliper body
10. Pad and wear indicator assembly
11. Pad assembly
12. Shim
13. Clip

Purchased from www.WorkshopManuals.co.uk

www.WorkshopManuals.co.uk

## LUBRICATION POINTS

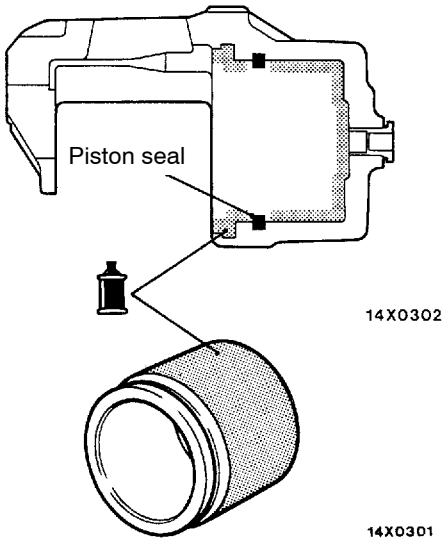


**Caution**
**The piston seal inside the seal and boot kit is coated with special grease, so do not wipe this grease off.**

**Brake fluid: DOT3 or DOT4**

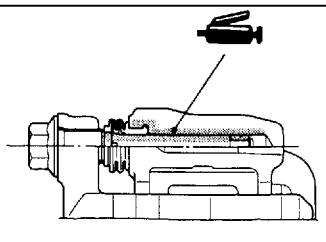


**Grease: Repair kit grease**

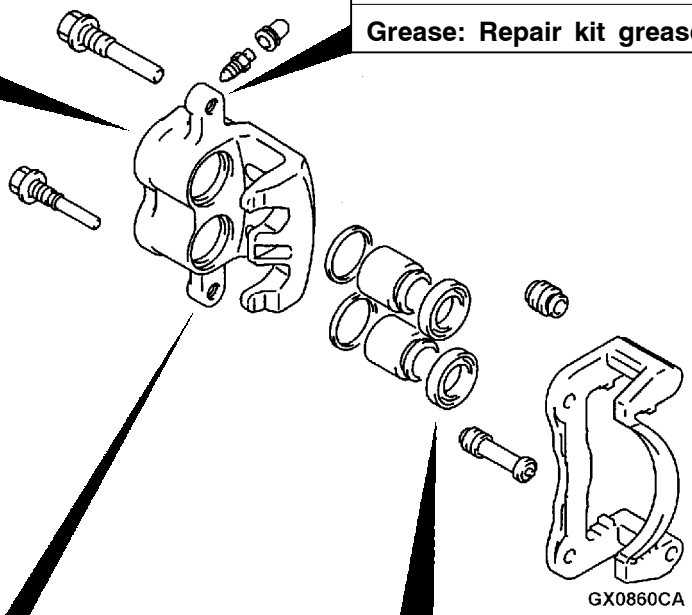


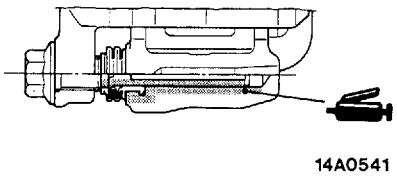


**Grease: Repair kit grease**

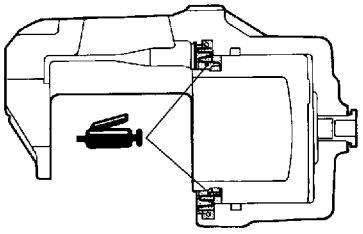


**Grease: Repair kit grease**

Purchased from www.WorkshopManuals.co.uk

www.WorkshopManuals.co.uk

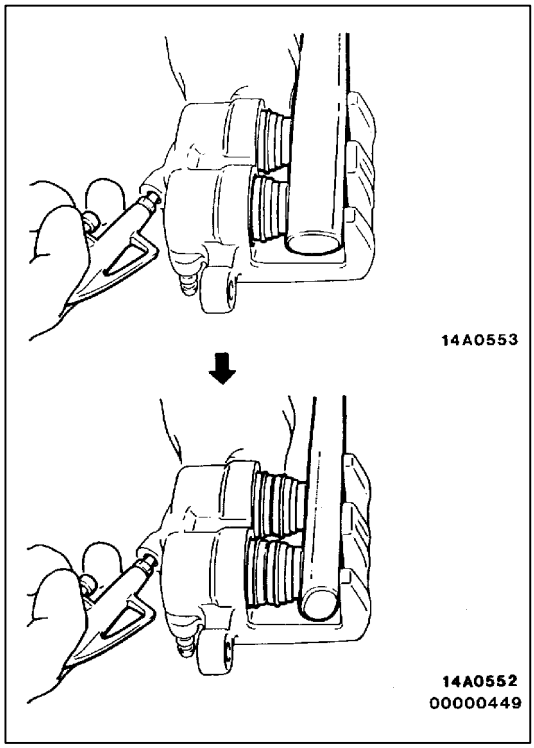


## DISASSEMBLY SERVICE POINTS

### ◀A▶ PISTON BOOT/PISTON REMOVAL

Remove the piston boot by pumping in air slowly from the brake hose connection. Be sure to use the handle of a plastic hammer and adjust the height of the two pistons while so that the pistons protrude evenly.

**Caution**
**Do not remove one piston completely before trying to remove the other piston, because it will become impossible to remove the second piston.**

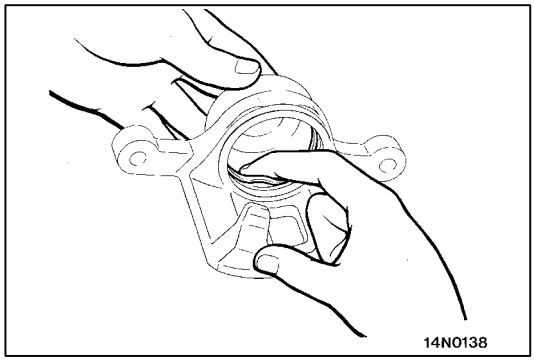


### ◀B▶ PISTON SEAL REMOVAL

1. Remove the piston seal with finger tip.

   **Caution**
   **Do not use a flat-tipped screwdriver or other tool to prevent damage to inner cylinder.**

2. Clean piston surface and inner bore with trichloroethylene, alcohol or the specified brake fluid.

   **Specified brake fluid: DOT3 or DOT4**

## INSPECTION

- Check the cylinder for wear, damage or rust.
- Check the piston surface for wear, damage or rust.
- Check the caliper body or sleeve for wear.
- Check pad for damage or adhesion of grease, check the backing metal for damage.

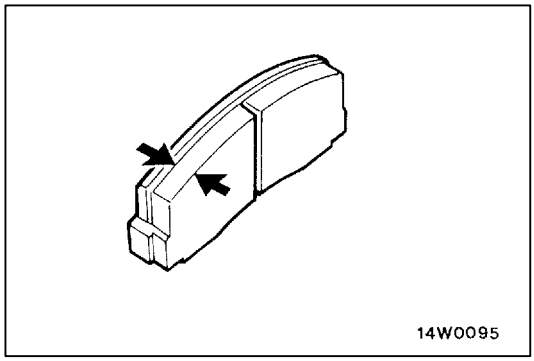


### PAD WEAR CHECK

Measure thickness at the thinnest and worn area of the pad. Replace the pad assembly if the pad thickness is less than the limit value.

**Standard value: 10 mm**

**Limit: 2.0 mm**

**Caution**
**1. Always replace the brake pads as an axle set.**

Purchased from www.WorkshopManuals.co.uk

www.WorkshopManuals.co.uk

2. **If an excessive difference is found in the thickness between the right and left brake pads, check moving parts.**

# REAR DISC BRAKE

## REMOVAL AND INSTALLATION

**Pre-removal Operation**
Brake Fluid Draining

**Post-installation Operation**
Brake Fluid Supplying and Air Bleeding
(Refer to P.35A-27, 29.)

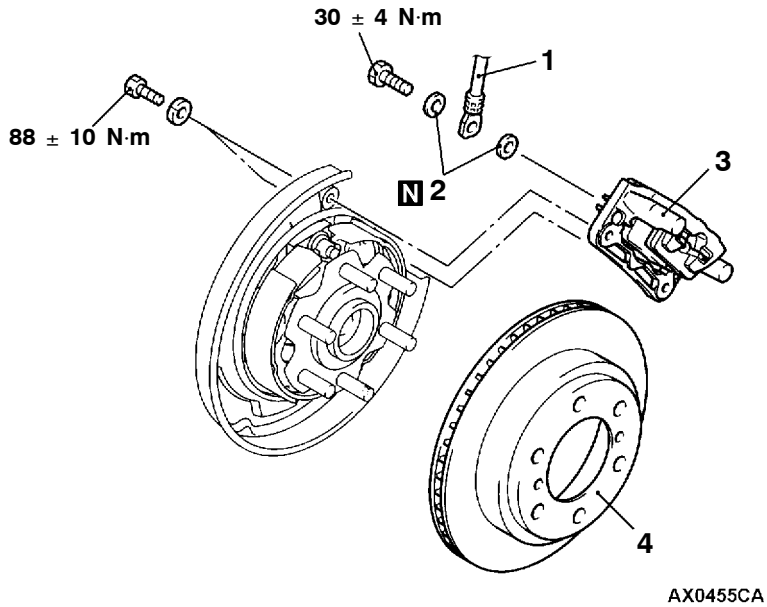


**Removal steps**
1. Brake hose connection
2. Gasket
▶A◀ 3. Disc brake assembly
4. Brake disc

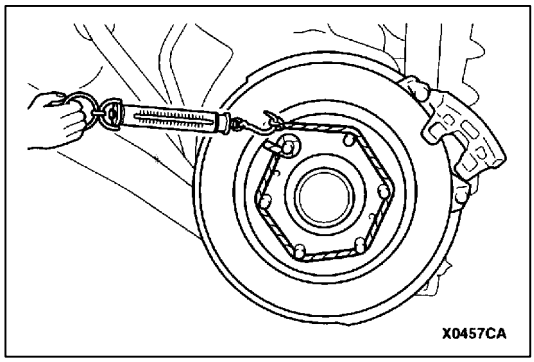


## INSTALLATION SERVICE POINT

### ▶A◀ DISC BRAKE ASSEMBLY INSTALLATION

1. In order to measure the brake drag force after pad installation, use a spring balance to measure the rotary-sliding resistance of the hub with the pads removed.
2. Install the caliper support to the backing plate, and then assemble the pad clip and the pad to the caliper support.

Purchased from www.WorkshopManuals.co.uk

www.WorkshopManuals.co.uk

**Caution**
**Do not contaminate the friction surfaces of the pads and brake discs by any oil or grease.**

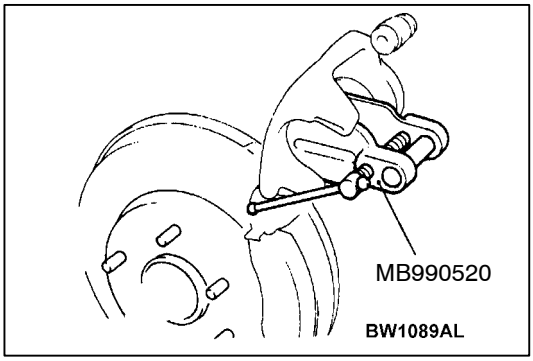


3. Clean the piston and insert it into the cylinder with the special tool.
4. Be careful that the piston boot does not become caught, when lowering the caliper assembly and install the guide pin to the caliper.
5. Start the engine, and then depress the brake pedal two or three times strongly. Then stop the engine.
6. Turn the brake disc forward 10 times.

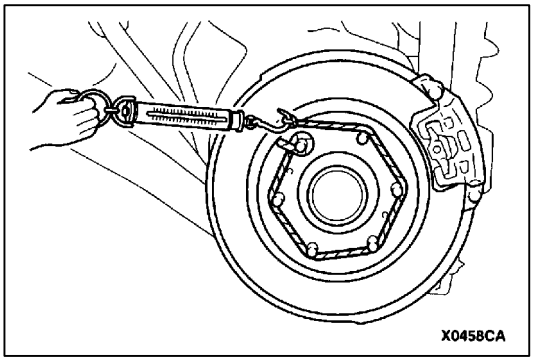


7. Use a spring balance to measure the rotary-sliding resistance of the hub.
8. Calculate the drag force of the disc brake [difference between the values measured at steps 1 and 7].

   **Standard value: 55 N**
9. If that drag force exceeds the standard value, disassemble the piston assembly. Then check the piston for contamination or rust, and confirm if the piston or the piston seal is deteriorated, and if the lock pin and the guide pin slide smoothly.

Purchased from www.WorkshopManuals.co.uk

www.WorkshopManuals.co.uk

## DISASSEMBLY AND REASSEMBLY

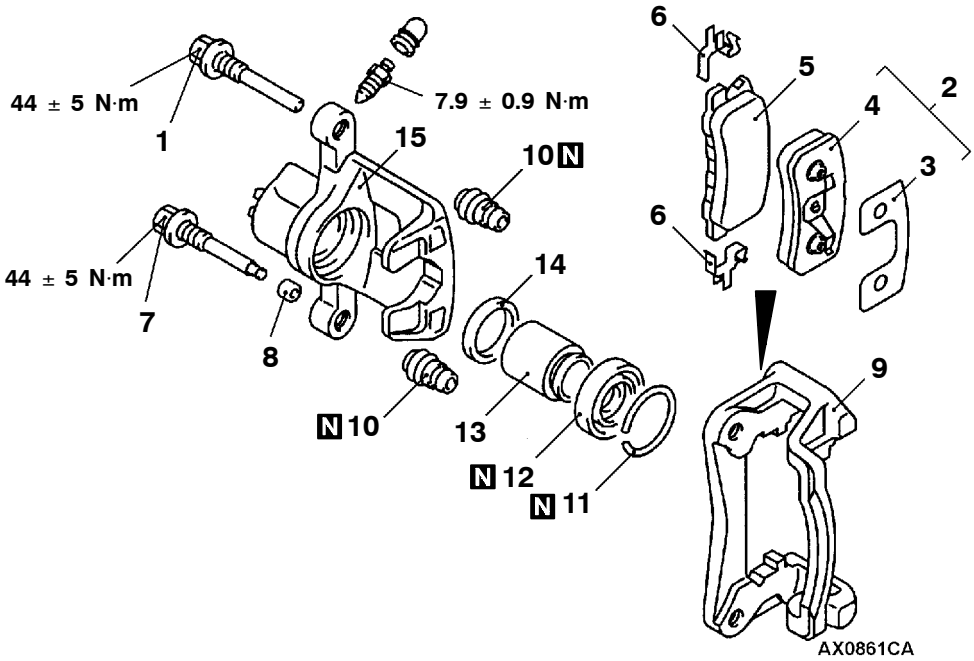


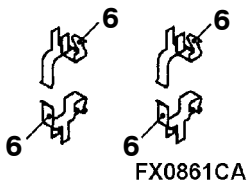


Clip set

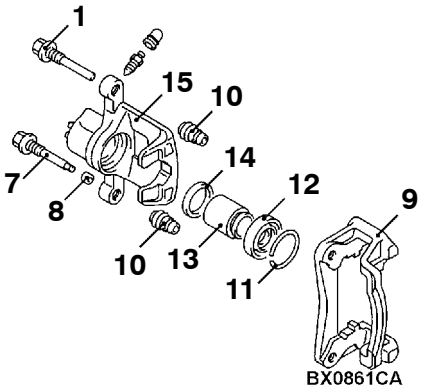


Brake caliper kit

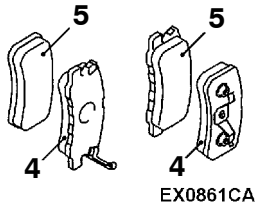


Pad set

Shim set

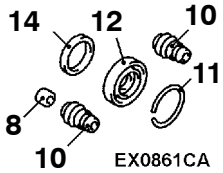


Seal and boots kit

**Disassembly steps**

▶A◀ 1. Guide pin
2. Pad and clip assembly, shim
3. Shim
4. Pad and clip assembly
5. Pad assembly
6. Pad clip
▶A◀ 7. Lock pin
8. Bushing
9. Caliper support
10. Pin boot
11. Boot ring
◀A▶ 12. Piston boot
◀A▶ 13. Piston
◀B▶ 14. Piston seal
15. Caliper body

Purchased from www.WorkshopManuals.co.uk

www.WorkshopManuals.co.uk

## LUBRICATION POINTS

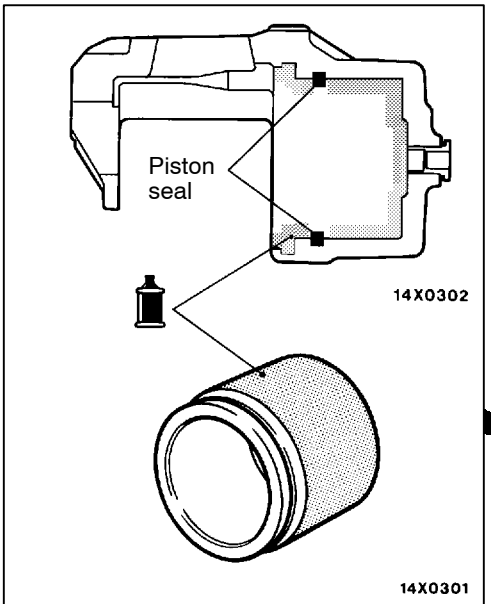


**Caution**
**The piston seal inside the seal and boot kit is coated with special grease, so do not wipe this grease off.**

**Brake fluid: DOT3 or DOT4**

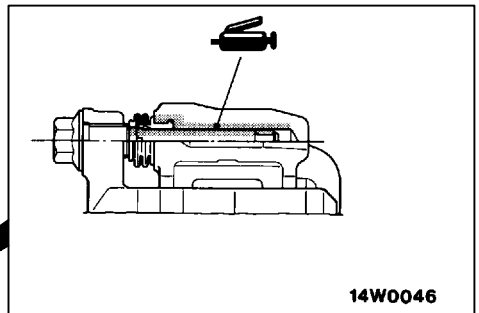


**Grease: Repair kit grease**

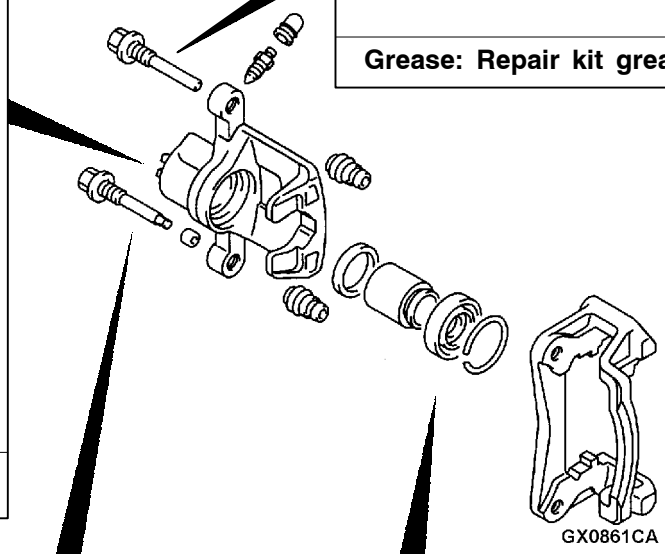


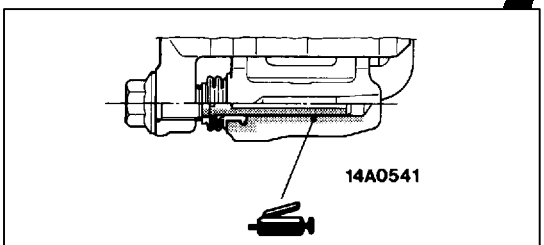


**Grease: Repair kit grease**

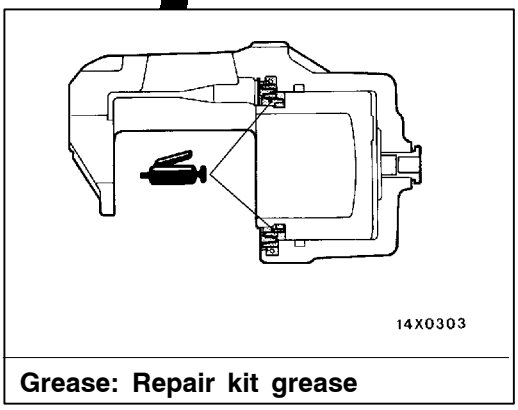


**Grease: Repair kit grease**

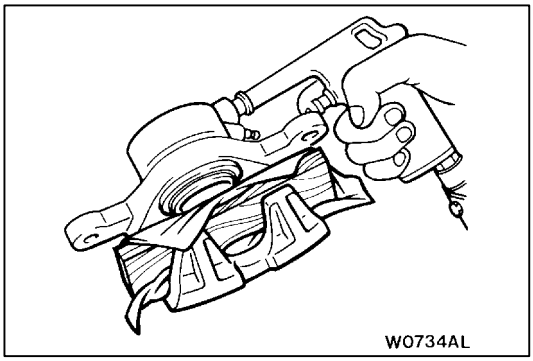


## DISASSEMBLY SERVICE POINTS

### ◀A▶ PISTON BOOT/PISTON REMOVAL

Use a piece of wood to protect the caliper body outer side, and then apply compressed air through the brake hose connection hole to withdraw the piston and piston boot.

**Caution**
**If air is blown into the caliper body suddenly, the piston will pop out, causing damage to the caliper body. Be sure to apply compressed air gradually.**

Purchased from www.WorkshopManuals.co.uk

www.WorkshopManuals.co.uk

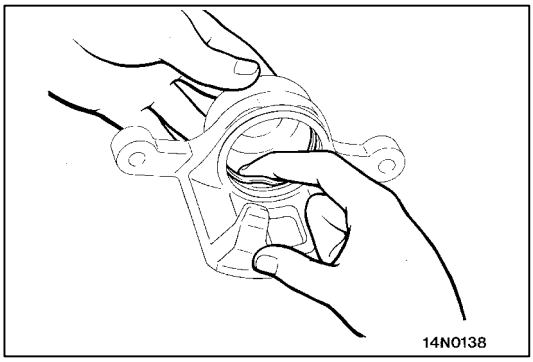


### ◀B▶ PISTON SEAL REMOVAL

1. Remove the piston seal with finger tip.

   **Caution**
   **Do not use a flat-tipped screwdriver or other tool to prevent damage to inner cylinder.**

2. Clean piston surface and inner bore with trichloroethylene, alcohol or the specified brake fluid.

   **Specified brake fluid: DOT3 or DOT4**

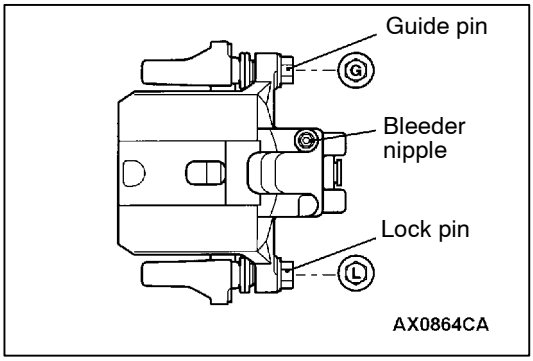


## REASSEMBLY SERVICE POINT

### ▶A◀ LOCK PIN/GUIDE PIN INSTALLATION

Install the guide pin to the bleeder nipple side at the caliper body, the lock pin to its opposite side, respectively.

## INSPECTION

- Check the cylinder for wear, damage or rust.
- Check the piston surface for wear, damage or rust.
- Check the caliper body or sleeve for wear.
- Check pad for damage or adhesion of grease, check the backing metal for damage.

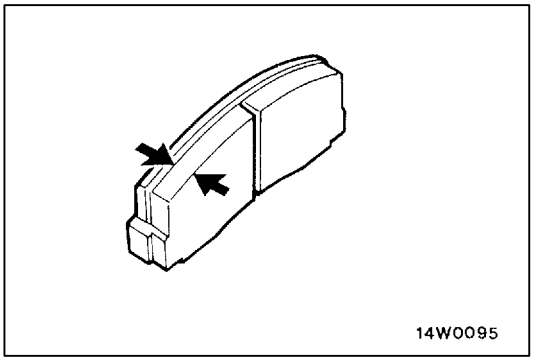


### PAD WEAR CHECK

Measure thickness at the thinnest and worn area of the pad. Replace the pad assembly if the pad thickness is less than the limit value.

**Standard value: 10 mm**

**Limit: 2.0 mm**

**Caution**

1. **Always replace the brake pads as an axle set.**
2. **If an excessive difference is found in the thickness between the right and left brake pads, check moving parts.**

Purchased from www.WorkshopManuals.co.uk

www.WorkshopManuals.co.uk

# LOAD SENSING PROPORTIONING VALVE <Vehicles without ABS>

## REMOVAL AND INSTALLATION

**Caution**
**Do not disassemble the load sensing proportioning valve.**

**Pre-removal Operation**
Brake Fluid Draining

**Post-installation Operation**
- Brake Fluid Supplying
- Brake Line Bleeding (Refer to P.35A-29.)

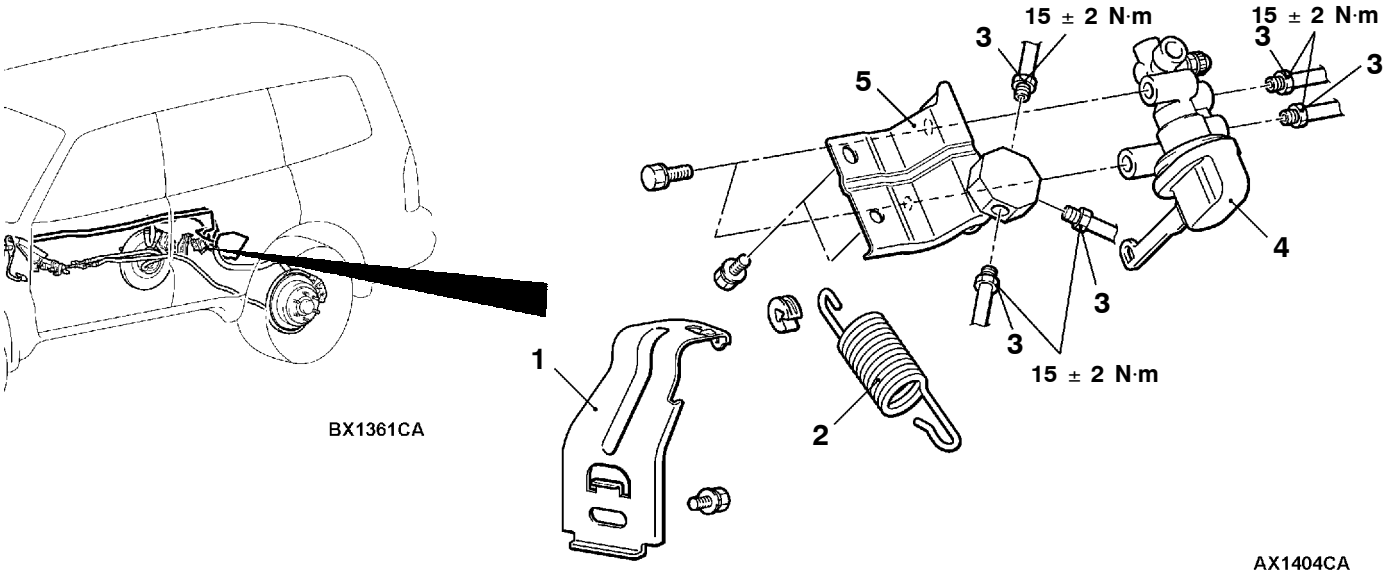


**Removal steps**

▶A◀ 1. Spring support
2. Load sensing spring
3. Brake pipe connection
4. Load sensing proportioning valve
5. Bracket assembly

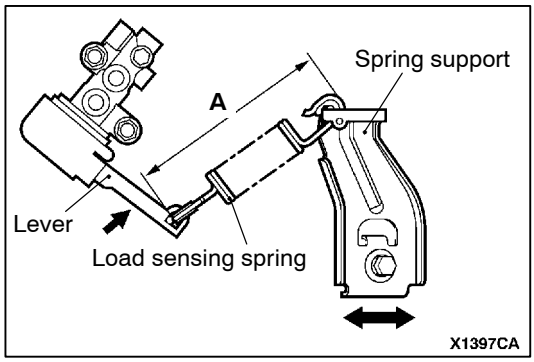


## INSTALLATION SERVICE POINT

### ▶A◀ SPRING SUPPORT INSTALLATION

1. Install the load sensing spring, and then tighten the spring support to the lower arm assembly temporarily.
2. Insert the lever of the load sensing proportioning valve fully into the valve side and hold it. Then adjust the spring support so that the spring length (the distance between the two ends of the spring) is at the standard value.

   **Standard value (A): 135 - 139 mm**

Purchased from www.WorkshopManuals.co.uk

www.WorkshopManuals.co.uk

# ANTI-SKID BRAKING SYSTEM (ABS) <4WD>

**Click on the applicable bookmark to selected the required model year.**

Purchased from www.WorkshopManuals.co.uk

www.WorkshopManuals.co.uk


# ANTI-SKID BRAKING SYSTEM (ABS) <4WD>

## CONTENTS


**GENERAL INFORMATION . . . . . 2**

**SERVICE SPECIFICATIONS . . . . . 4**

**LUBRICANT . . . . . Refer to GROUP 35A**

**SEALANTS . . . . . Refer to GROUP 35A**

**SPECIAL TOOLS . . . . . 4**

**TROUBLESHOOTING . . . . . 4**

**ON-VEHICLE SERVICE . . . . . 27**

- Wheel Speed Sensor Output Voltage Measurement . . . . . 27
- ABS Valve Relay Continuity Check . . . . . 28
- Hydraulic Brake Booster (HBB) - Hydraulic Unit Check . . . . . 29
- Solenoid Valve Check . . . . . 30
- When the Battery is Flat . . . . . 31
- Brake Pedal Check and Adjustment . . . . . Refer to GROUP 35A
- Hydraulic Brake Booster (HBB) Operation Check . . . . . Refer to GROUP 35A
- Hydraulic Brake Booster (HBB) Check . . . . . Refer to GROUP 35A
- Motor Relay Continuity Check . . . . . Refer to GROUP 35A
- Bleeding . . . . . Refer to GROUP 35A
- Brake Fluid Level Sensor Check . . . . . Refer to GROUP 35A
- Disc Brake Pad Check and Replacement . . . . . Refer to GROUP 35A
- Brake Disc Thickness Check . . . . . Refer to GROUP 35A
- Brake Disc Runout Check and Correction . . . . . Refer to GROUP 35A

**BRAKE PEDAL . . . . . Refer to GROUP 35A**

**HYDRAULIC BRAKE BOOSTER (HBB) . . . . . Refer to GROUP 35A**

**HBB BUZZER . . . . . Refer to GROUP 35A**

**FRONT DISC BRAKE . . Refer to GROUP 35A**

**REAR DISC BRAKE . . . . Refer to GROUP 35A**

**ABS-ECU . . . . . 32**

**WHEEL SPEED SENSOR . . . . . 33**

**G-SENSOR . . . . . 36**


Purchased from www.WorkshopManuals.co.uk

www.WorkshopManuals.co.uk

# GENERAL INFORMATION

ABS has been adopted as standard equipment in all vehicles to maintain directional stability and steering performance during sudden braking.
The ABS control method used is a 4-sensor, 4-channel method (previous models: 4-sensor, 3-channel method) which allows the brake pressures for all four wheels to be controlled independently of each other. The system has the following features.

- EBD* (Electronic Brake force Distribution system) control has been added to provide the ideal braking force for the rear wheels.
- The hydraulic unit function has been integrated with the hydraulic brake booster (HBB).
- Select solenoid valves (two valves for FL and FR) have been adopted in order to reduce the pedal kickback and improve the operation feeling when the ABS is operating.
- Independent 4-wheel control is carried out wile the vehicle is turning in order to increase the braking force.

NOTE
*EBD: Electronic Brake-force Distribution

## EBD CONTROL

In ABS, electronic control method is used whereby the rear wheel brake hydraulic pressure during braking is regulated by rear wheel control solenoid valves in accordance with the vehicle's rate of deceleration and the front and rear wheel slippage which are calculated from the signals received from the various wheel sensors. EBD control is a control system which provides a high level of control for both vehicle braking force and vehicle stability. The system has the following features.

- Because the system provides the optimum rear wheel braking force regardless of the vehicle laden condition and the condition of the road surface, the system reduces the required pedal depression force, particularly when the vehicle is heavily laden or driving on road surfaces with high frictional coefficients.
- Because the duty placed on the front brakes has been reduced, the increases in pad temperature can be controlled during front brakes applying to improve the wear resistance characteristics of the pad.
- Control valves such as the proportioning valve are no longer required.

## SPECIFICATIONS

| Item | | Specifications |
|---|---|---|
| ABS control method | | 4-sensor, 4-channel |
| No. of ABS rotor teeth | Front | 50 |
| | Rear | 50 |
| ABS speed sensor | Type | Magnet coil type |
| | Gap between sensor and rotor mm | 0.9 (non-adjustable type) |

Purchased from www.WorkshopManuals.co.uk

www.WorkshopManuals.co.uk

## STRUCTURAL DIAGRAM

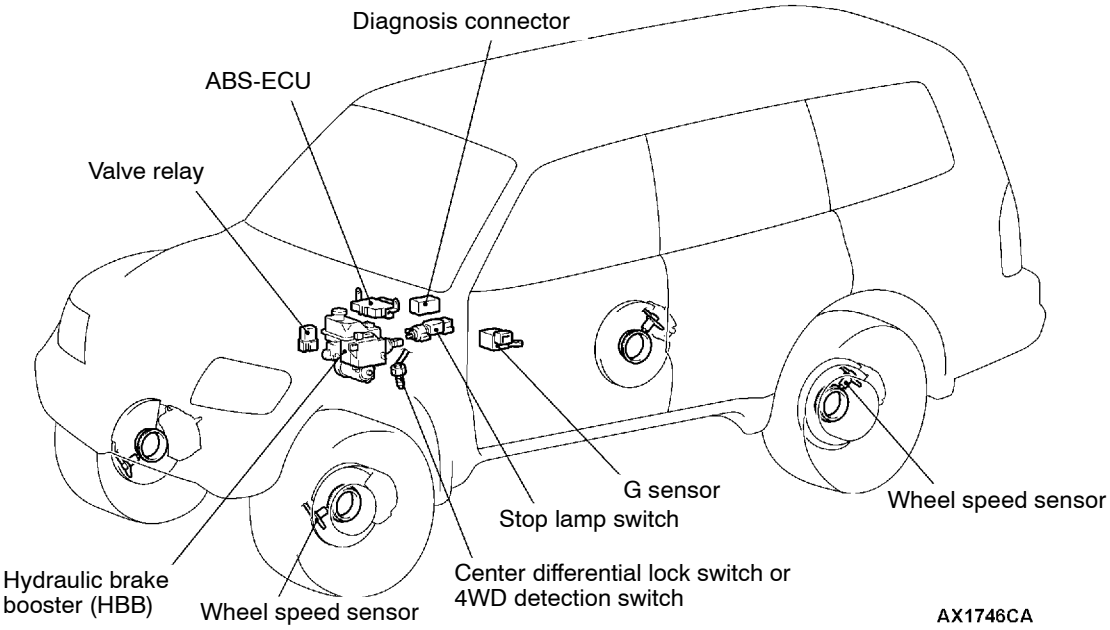


Purchased from www.WorkshopManuals.co.uk

www.WorkshopManuals.co.uk

# SERVICE SPECIFICATIONS

| Item | | Standard value |
|---|---|---|
| Control solenoid valve resistance Ω | IN | 4.75 - 5.25 |
| | OUT | 2.0 - 2.4 |
| Select solenoid valve resistance Ω | | 3.5 - 3.9 |
| Wheel speed sensor terminal resistance kΩ | | 1.0 - 1.5 |
| Wheel speed sensor insulation resistance kΩ | | 100 or more |

# SPECIAL TOOLS

| Tools | No. | Name | Application |
|---|---|---|---|
| 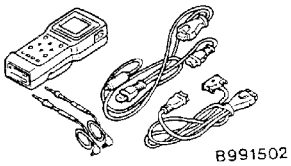 B991502 | MB991502 | MUT-II sub assembly | Checking the ABS (Diagnosis display using the MUT-II) |
| 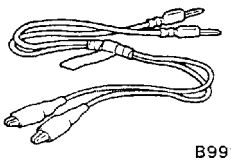 B991529 | MB991529 | Diagnosis code checking harness | Checking the ABS (Diagnosis display using the ABS warning lamp) |
| 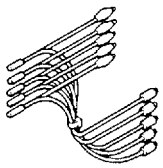 B991348 | MB991348 | Test harness set | Checking the G sensor |

# TROUBLESHOOTING

## STANDARD FLOW OF DIAGNOSTIC TROUBLESHOOTING

Refer to GROUP 00 - How to Use Troubleshooting/Inspection Service Points.

## PRECAUTIONS WHEN CARRYING OUT DIAGNOSIS

(1) The ABS is a system which controls the brake pressure by means of the operation of the ECU. Accordingly, the following symptoms may occur at times, but these are a sign of normal ABS operation, and do not indicate a malfunction.

| Symptom | Explanation of symptom |
|---|---|
| When the engine starts, a knocking sound can be heard coming from the engine compartment. | This sound occurs as a result of system operation checking, and is not a malfunction. |
| 1. The brake pedal feeling changes and noise is generated.(Rattling)<br>2. When the ABS is operating, noise is generated by parts of the vehicle chassis as control turns on and off. (Thump: suspension; squeak: tyres) | This is the sound of normal system operation, and is not a malfunction. |
| Shocks are felt if the brake pedal is depressed when driving at low speed. | This is due to system operation checking (starting-of check when the vehicle speed reaches a certain number of km/h) and is not a malfunction. |

Purchased from www.WorkshopManuals.co.uk

www.WorkshopManuals.co.uk

(2) For road surfaces such as snow-covered roads and gravel roads, the braking distance for vehicles with ABS can sometimes be longer than that for other vehicles. Accordingly, advise the customer to drive safely on such roads by lowering the vehicle speed and not being too overconfident.
(3) Diagnosis detection conditions vary according to the diagnosis code. When re-checking trouble symptoms, the conditions given in the “Explanation” column of the Inspection Chart Classified by Trouble Symptoms must always be satisfied.

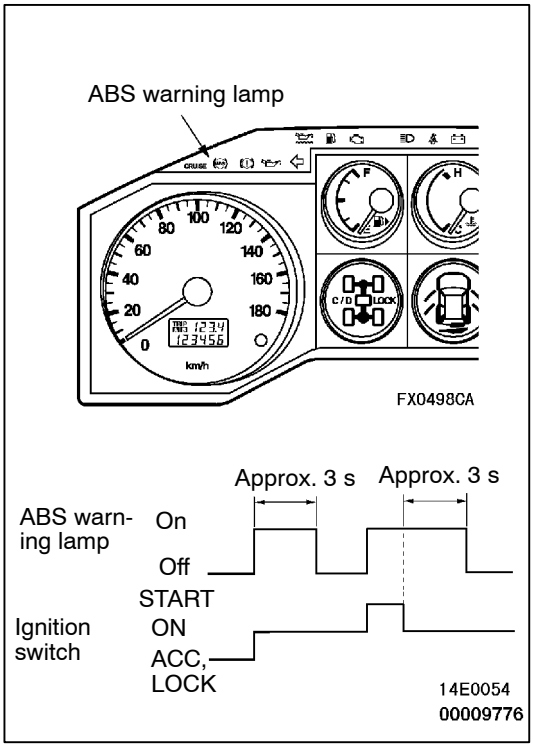


## ABS WARNING LAMP INSPECTION

Check that the ABS warning lamp illuminates in the following way.
Even if the pressure inside the accumulator of the hydraulic brake booster (HBB) is below the specified value, the ABS warning lamp will illuminate because ABS operation has been stopped. In such cases, if the HBB pump is driven by the accumulated pressure inside the accumulator and causes the ABS warning lamp to switch off, it does not indicate a system malfunction.

(1) When the ignition switch is turned to the ON position, the ABS warning lamp illuminates* for approximately 3 seconds, and then switches off.
(2) When the ignition switch is turned to the START position, the ABS warning lamp remains illuminated.
(3) When the ignition switch returns from the START to the ON position, the ABS warning lamp illuminates* for approximately 3 seconds, and then remains switched off.
(4) If any of the above do not occur, check the diagnosis codes.

NOTE
*: The ABS warning lamp may remain illuminated after the ignition switch is turned to the ON position and the vehicle starts moving until the vehicle speed reaches a speed of several km/h. This only occurs if a diagnosis code from No. 21 to No. 24 relating to a wheel speed sensor malfunction was generate when the ignition switch was last turned to the ON position and is still stored in the ABS-ECU. The ABS-ECU will cause the ABS warning lamp to illuminate until the point where it can ascertain (during the starting-off check) that the problem associated with this diagnosis code has returned to normal.

## DIAGNOSIS FUNCTION

### READING DIAGNOSIS CODES

Use the MUT-II or the ABS warning lamp to read the diagnosis codes.
(Refer to GROUP 00 - How to Use Troubleshooting/Inspection Service Points.)

NOTE
Connect the MUT-II to the 16-pin diagnosis connector.

Purchased from www.WorkshopManuals.co.uk

www.WorkshopManuals.co.uk

## ERASING DIAGNOSIS CODES

### When using the MUT-II

Connect the MUT-II to the diagnosis connector and erase the diagnosis codes.

**Caution**
**Turn the ignition switch to the LOCK (OFF) position when connecting and disconnecting the MUT-II.**

NOTE
Connect the MUT-II to the 16-pin diagnosis connector.

### When not using the MUT-II

(1) Stop the vehicle.
(2) Turn the stop lamp switch to ON (brake pedal depressed).
(3) In this condition (after carrying out steps 1) to 2)), turn the ignition switch to the ON position. Then turn off the stop lamp switch (release the brake pedal) within 3 seconds, and then turn the stop lamp switch on and off again a further 10 times.

NOTE
If the functioning of the ABS-ECU has been stopped by the fail-safe function, the diagnosis codes cannot be erased.

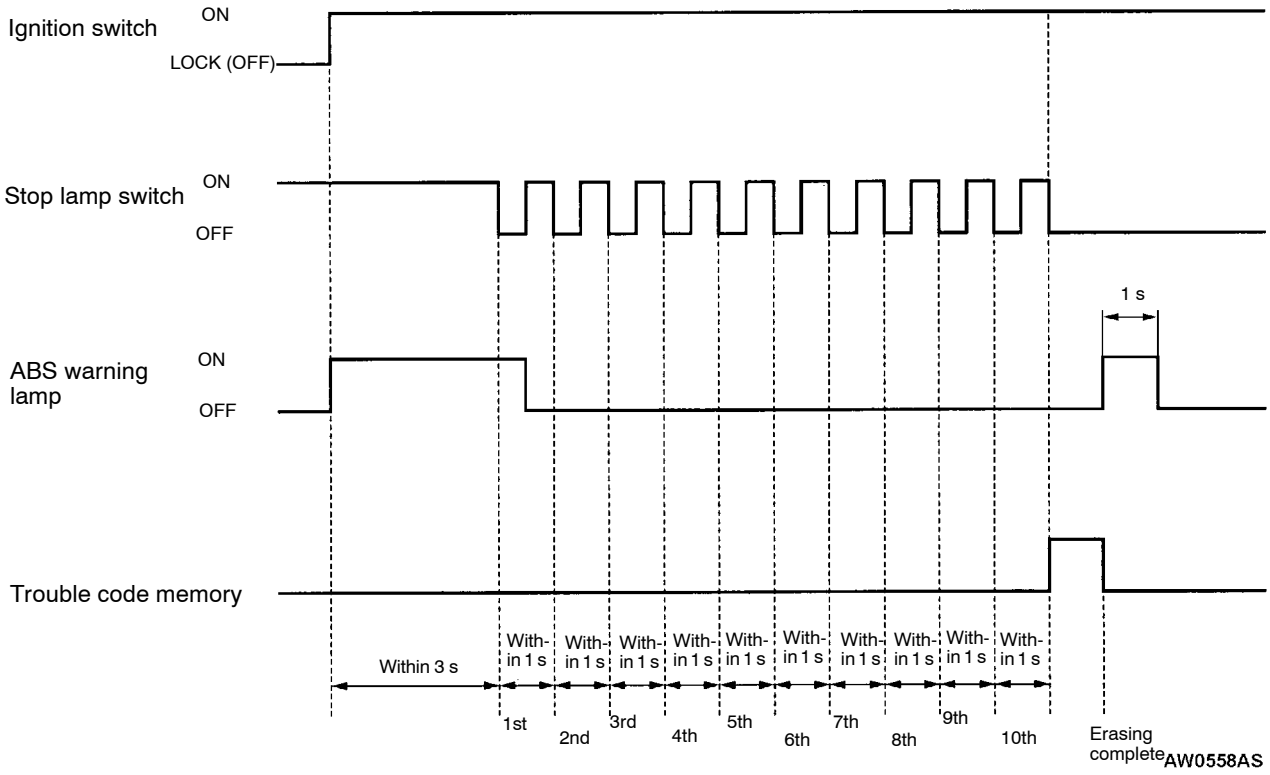


Purchased from www.WorkshopManuals.co.uk

www.WorkshopManuals.co.uk

## INSPECTION CHART FOR DIAGNOSIS CODES

| Diagnosis code No. | Diagnosis item | | Reference page |
|---|---|---|---|
| 11 | Wheel speed sensor (FR) system (open circuit or short-circuit) | | 35B-8 |
| 12 | Wheel speed sensor (FL) system (open circuit or short-circuit) | | 35B-8 |
| 13 | Wheel speed sensor (RR) system (open circuit or short-circuit) | | 35B-8 |
| 14 | Wheel speed sensor (RL) system (open circuit or short-circuit) | | 35B-8 |
| 15 | Wheel speed sensor system (output signal abnormality) | | 35B-9 |
| 16 | ABS-ECU or valve relay power supply system (abnormal voltage drop or rise) | | 35B-10 |
| 21 | Wheel speed sensor (FR) system | | 35B-8 |
| 22 | Wheel speed sensor (FL) system | | 35B-8 |
| 23 | Wheel speed sensor (RR) system | | 35B-8 |
| 24 | Wheel speed sensor (RL) system | | 35B-8 |
| 26 | Center differential lock switch system | | 35B-11, 12 |
| 27 | Rear differential lock switch system | | 35B-11, 12 |
| 32 | G sensor system | | 35B-13 |
| 33 | Stop lamp switch system | | 35B-14 |
| 41 | Control solenoid valve (FR) system | If there is no response to the solenoid valve drive signal corresponding to each respective item | 35B-15 |
| 42 | Control solenoid valve (FL) system | | |
| 43 | Control solenoid valve (RR) system | | |
| 44 | Control solenoid valve (RL) system | | |
| 45 | Changeover solenoid valve (FR) system | | |
| 46 | Changeover solenoid valve (FL) system | | |
| 51 | Valve relay system (ON problem) | | 35B-16 |
| 52 | Valve relay system (OFF problem) | | 35B-17 |
| 55 | HBB system | | Carry out HBB troubleshooting. (Refer to GROUP 35A.) |
| 63 | ABS-ECU system | | 35B-32 (ABS-ECU replacement) |

NOTE
*: Code No.16 is erased from the memory if the condition returns to normal.

Purchased from www.WorkshopManuals.co.uk

www.WorkshopManuals.co.uk

## INSPECTION PROCEDURE CLASSIFIED BY DIAGNOSIS CODE

| Code No. 11, 12, 13, 14 Wheel speed sensor system (open circuit or short-circuit)<br>Code No. 21, 22, 23, 24 Wheel speed sensor system | Probable cause |
|---|---|
| Code Nos. 11, 12, 13, 14 are output when the open circuit or short-circuit detection carried out by the ABS-ECU hardware circuit detects that there is an open circuit or short-circuit in the (+) or (-) wire in one of the four wheel speed sensors and signals are consequently not being input. | ● Malfunction of wheel speed sensor<br>● Malfunction of harness or connector<br>● Malfunction of the ABS-ECU |
| Code No. 21, 22, 23, 24 are output at the following times:<br>● If an open circuit cannot be verified, but one or more of the wheel speed sensors does not output any signal when the vehicle speed is a certain number of km/h or higher.<br>● When a problem such as chipped or plugged-up rotor tooth is detected, or if the sensor output drops and anti-skid control is continuously carried out due to a malfunctioning sensor or a warped ABS rotor. | ● Malfunction of wheel speed sensor<br>● Malfunction of harness or connector<br>● Malfunction of ABS rotor<br>● Excessive clearance between sensor and ABS rotor<br>● Malfunction of the ABS-ECU<br>● Malfunction of wheel bearing |

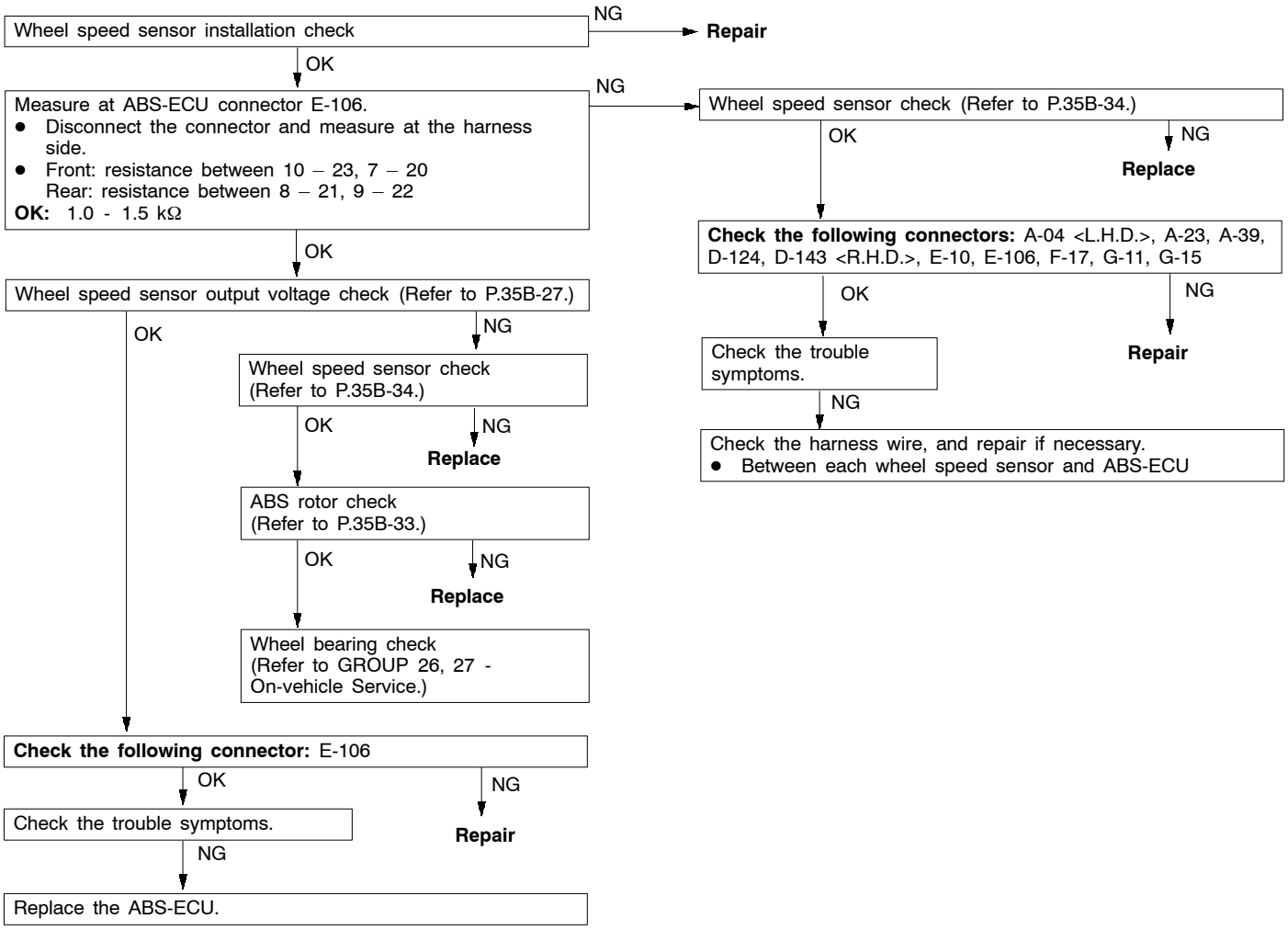


Purchased from www.WorkshopManuals.co.uk

www.WorkshopManuals.co.uk

| Code No. 15 Wheel speed sensor system (output signal abnormality) | Probable cause |
|---|---|
| This malfunction code is output when any one of the wheel speed sensor output signals during driving is abnormal (except open and short circuit). | • Uneven tyre size for all four wheels<br>• Incorrect wheel speed sensor installation<br>• Malfunction of wheel speed sensor<br>• Malfunction of harness or connector<br>• Malfunction of ABS rotor<br>• Malfunction of wheel bearing<br>• Malfunction of the ABS-ECU |

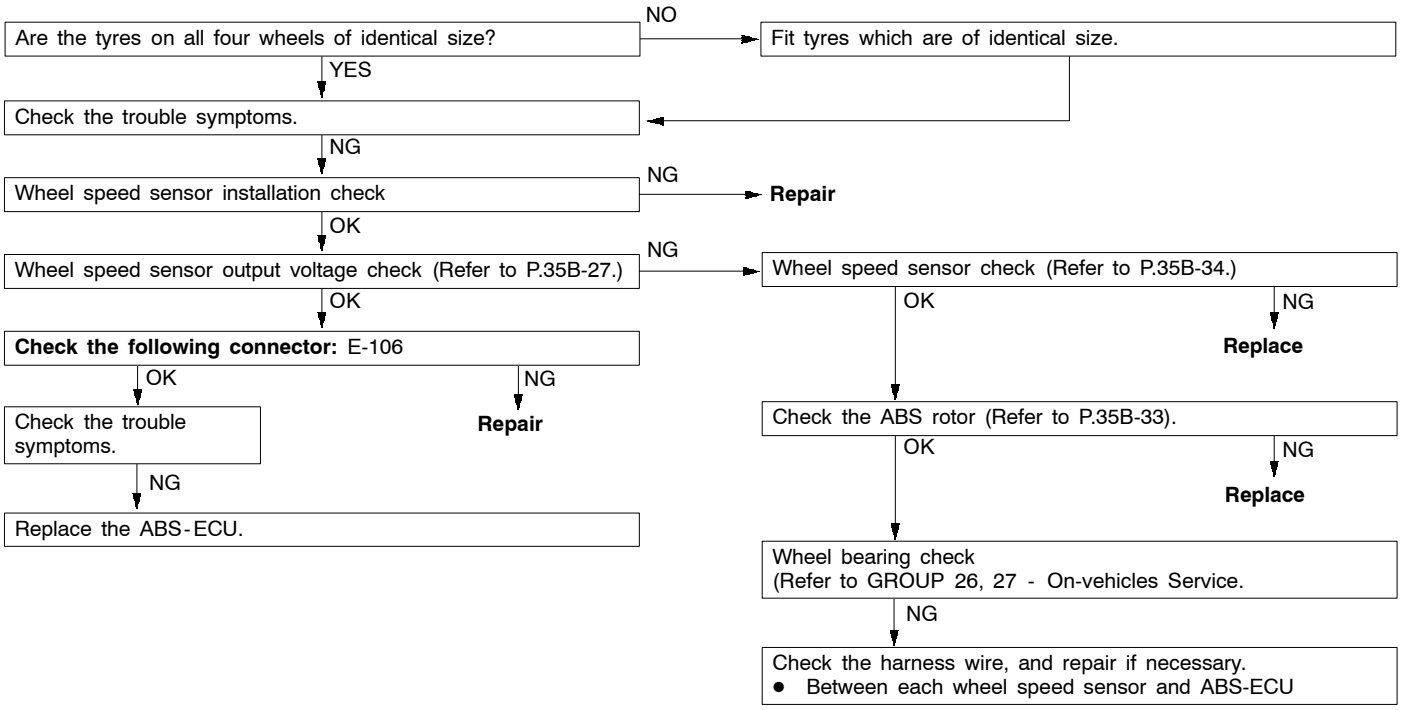


Purchased from www.WorkshopManuals.co.uk

www.WorkshopManuals.co.uk

| Code No.16 ABS-ECU power supply system (abnormal voltage increase or decrease) | Probable cause |
|---|---|
| This code is output if the ABS-ECU power supply voltage or valve relay power supply voltage drops below or rises above a certain level. | ● Malfunction of battery<br>● Malfunction of harness or connector<br>● Malfunction of the ABS-ECU |

**Caution**

**If the system voltage drops or rises during inspection, this code will be output to indicate a current problem. And correct problem diagnosis will not be possible. Before carrying out the following procedure, check the battery and recharge it if necessary.**

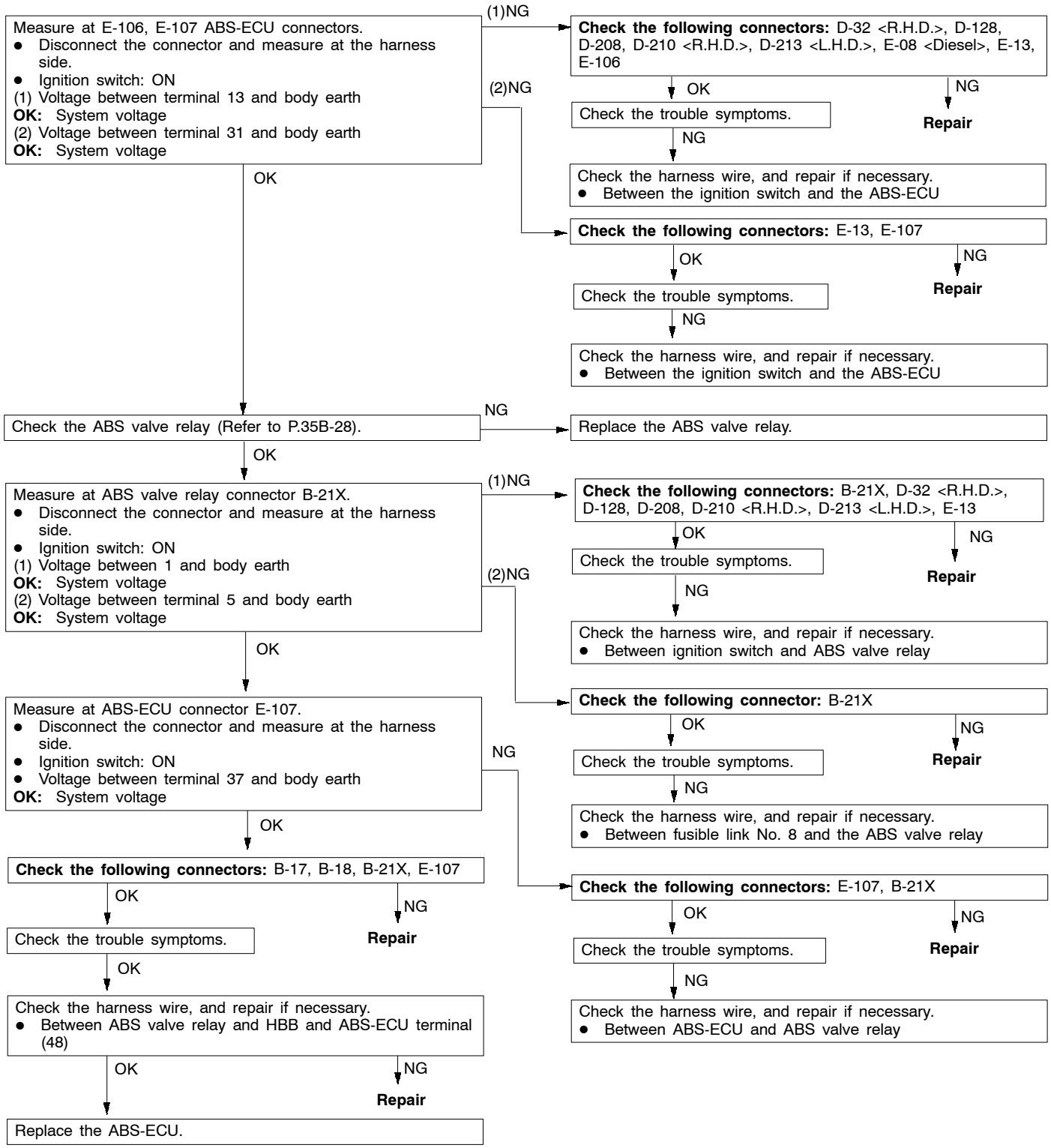


Purchased from www.WorkshopManuals.co.uk

www.WorkshopManuals.co.uk

## <Vehicles without rear differential lock system>

| Code No. 26 Center differential lock switch system<br>Code No. 27 Rear differential lock switch system | Probable cause |
|---|---|
| The ABS-ECU is designed to accommodate the fitting of a rear differential lock. Because of this, for vehicles which are not equipped with a rear differential lock, system voltage is applied to terminal (33) of the ABS-ECU instead of the rear differential lock switch signal. If there is an open circuit in the lines by which this system voltage is applied, the ABS-ECU outputs code Nos. 26 and 27. | ● Malfunction of harness or connector<br>● Malfunction of the ABS-ECU |

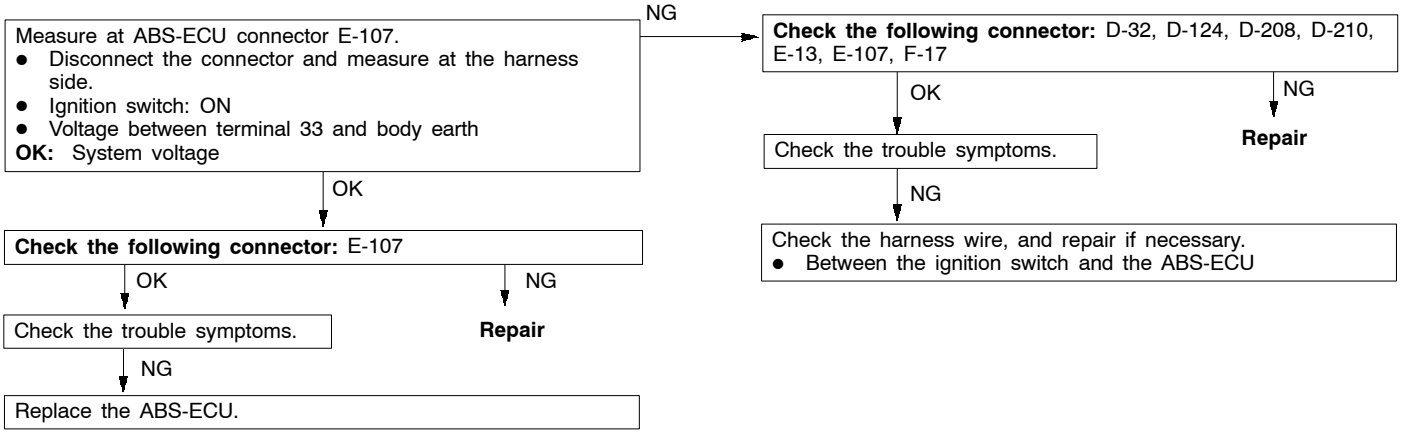


Purchased from www.WorkshopManuals.co.uk

www.WorkshopManuals.co.uk

## <Vehicles with rear differential lock system>

| Code No.26 Center differential lock detection switch<br>Code No.27 Rear differential lock detection switch | Probable cause |
|---|---|
| On vehicles with rear differential lock system, these codes will be set under the following conditions:<br>● The ABS-ECU detects an open-circuit in the center differential lock detection switch and the rear differential lock detection switch systems, so no signal is sent.<br>● The vehicle has been driven at 20 km/h or more for five minutes or more while the center differential lock detection switch is off and the rear differential lock detection switch is on, and then the vehicle speed decreases to 2 km/h in that condition. | ● Malfunction of harness or connector<br>● Malfunction of the center differential lock detection switch<br>● Malfunction of the rear differential lock detection switch<br>● Malfunction of the rear differential lock-ECU<br>● Malfunction of the ABS-ECU |

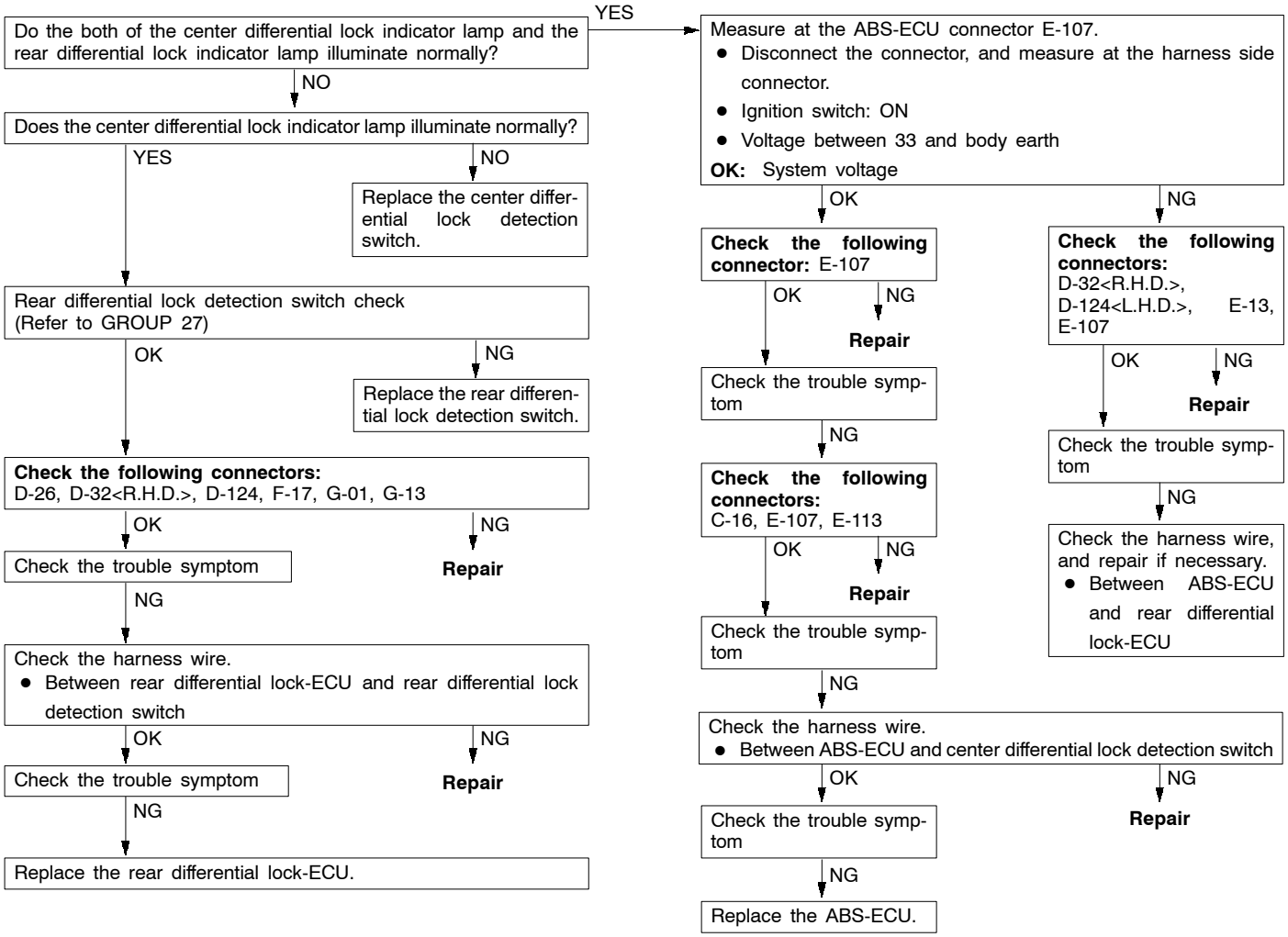


Purchased from www.WorkshopManuals.co.uk

www.WorkshopManuals.co.uk

| Code No. 32 G sensor system | Probable cause |
|---|---|
| This code is output at the following cases:<br>● When the G sensor output is lower than 0.5 V or higher than 4.5 V (Open circuit or short-circuit in G sensor circuit)<br>● When there is no variation in the G sensor output voltage (G sensor output seized) | ● Malfunction of G sensor<br>● Malfunction of harness or connector<br>● Malfunction of the ABS-ECU |

Measure at G sensor connector E-01.
- Disconnect the connector and measure at the harness side.

(1) Voltage between terminal 1 and body earth (Ignition switch: ON)
**OK:** System voltage
(2) Continuity between terminal 3 and body earth
**OK:** Continuity

(1)NG → **Check the following connectors:** D-32<L.H.D.>, D-208, D-210, E-01, E-115
- OK → Check the trouble symptoms.
  - NG → Check the harness wire, and repair if necessary.
    - Between ignition switch and G sensor
- NG → **Repair**

(2)NG → **Check the following connectors:** E-01, E-106, E-113
- OK → Check the trouble symptoms.
  - NG → Check the harness wire, and repair if necessary.
    - Between the G sensor and ABS-ECU
    - OK → Replace the ABS-ECU.
    - NG → **Repair**
- NG → **Repair**

OK ↓

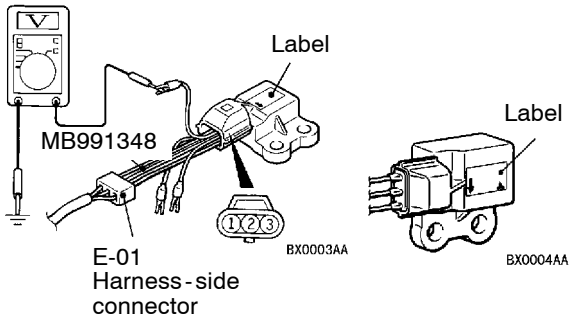


- Remove the G sensor (Refer to P.35B-36).
- Connect the special tool between the G sensor harness-side connector E-01 and the G sensor.
- Ignition switch: ON
- Voltage between terminal 2 and body earth when the G sensor is placed on a level surface

**OK:** 2.4 - 2.6 V
- Voltage between terminal 2 and body earth when the G sensor is placed so that the label is facing straight up

**OK:** 3.3 - 3.7 V

NG → Replace the G sensor.

OK ↓

**Check the following connectors:** E-01, E-106, E-113
- NG → **Repair**
- OK ↓

Check the trouble symptoms.
- NG ↓

Check the harness wire, and repair if necessary.
- Between the G sensor and ABS-ECU
- NG → **Repair**
- OK ↓

Replace the ABS-ECU.

Purchased from www.WorkshopManuals.co.uk

www.WorkshopManuals.co.uk

| Code No. 33 Stop lamp switch system (open circuit or ON problem) | Probable cause |
|---|---|
| This code is output at the following cases:<br>● If the stop lamp switch is continuously on for 15 minutes or more while driving<br>● If there is an open circuit in the stop lamp switch input circuit harness | ● Malfunction of stop lamp switch<br>● Malfunction of harness or connector<br>● Malfunction of ABS-ECU |

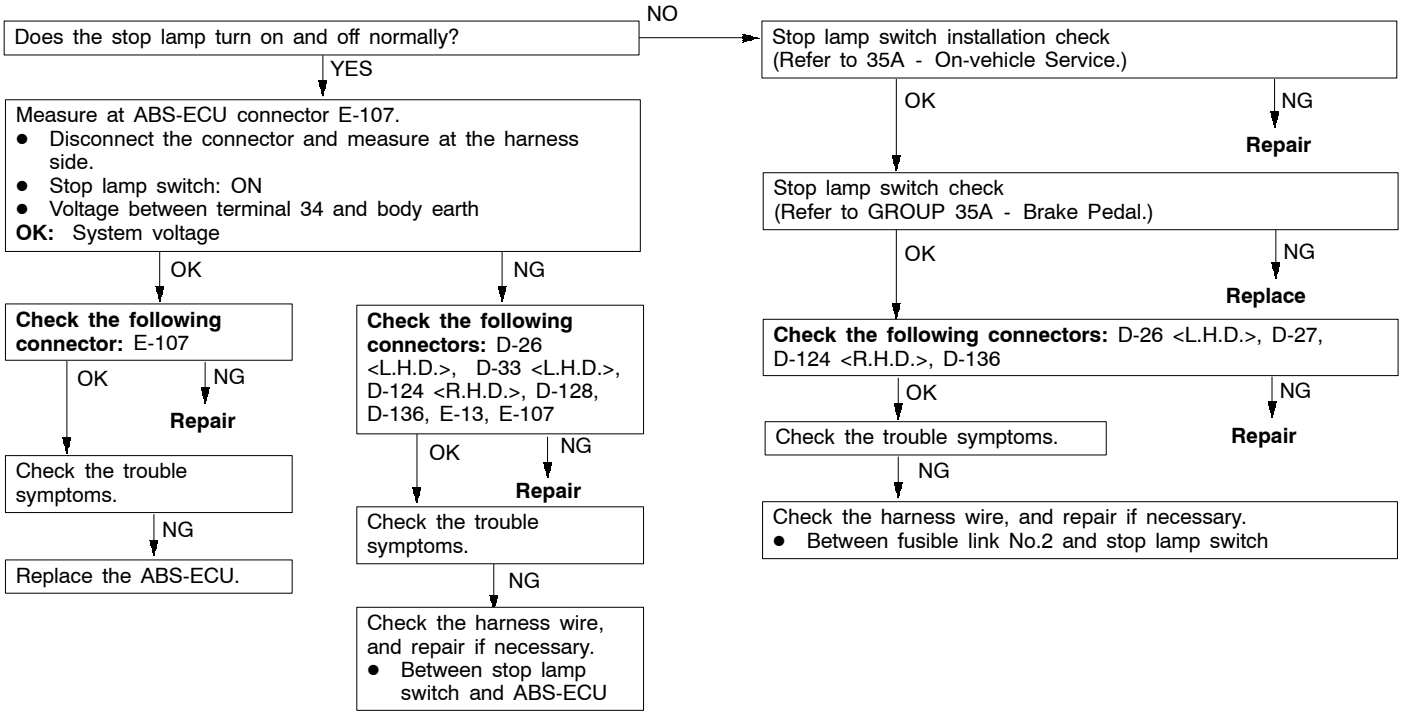


Purchased from www.WorkshopManuals.co.uk

www.WorkshopManuals.co.uk

| Code No. 41, 42, 43, 44 Control solenoid valve system<br>Code No. 45, 46 Select solenoid valve system | Probable cause |
|---|---|
| The ABS-ECU constantly monitors the solenoid valve drive circuits. These codes are output if the ABS-ECU judges that there is an open circuit or short-circuit in a solenoid coil or harness because the solenoid valve is on but no current flows to the solenoid valve, or if current continues flowing to the solenoid valve even thought the solenoid valve is off. | • Malfunction of harness or connector<br>• Malfunction of HBB's master cylinder and hydraulic unit assembly<br>• Malfunction of the ABS-ECU |

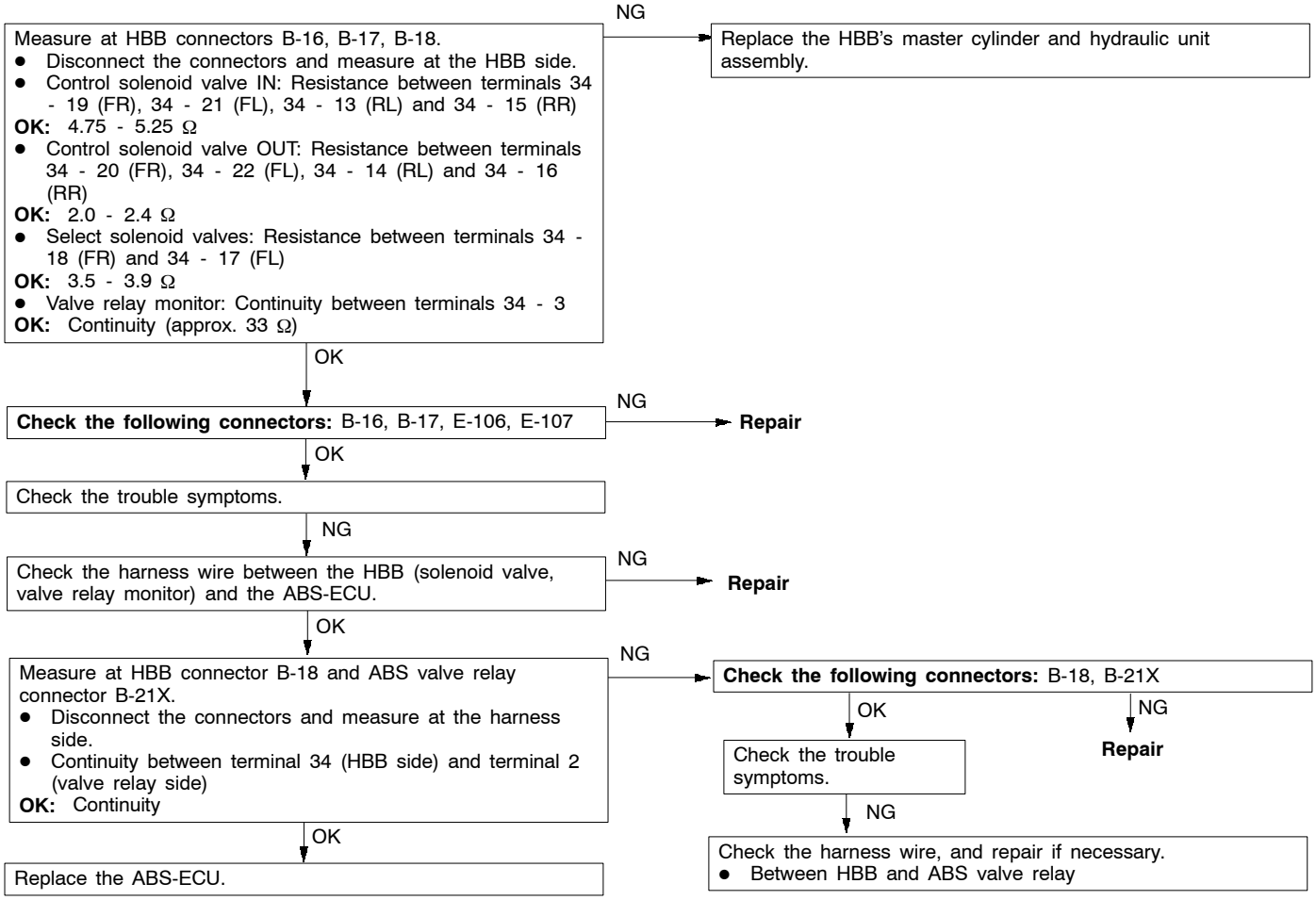


Purchased from www.WorkshopManuals.co.uk

www.WorkshopManuals.co.uk

| Code No. 51 Valve relay system (ON problem) | Probable cause |
|---|---|
| This code is output when the ABS-ECU judges during the initial check when the ignition switch is turned to the ON position and the valve relay is OFF that there is a fused relay contact or a short-circuit in the valve relay drive circuit when power is being supplied to the solenoid valve. | • Malfunction of harness or connector<br>• Malfunction of ABS valve relay<br>• Malfunction of the ABS-ECU |

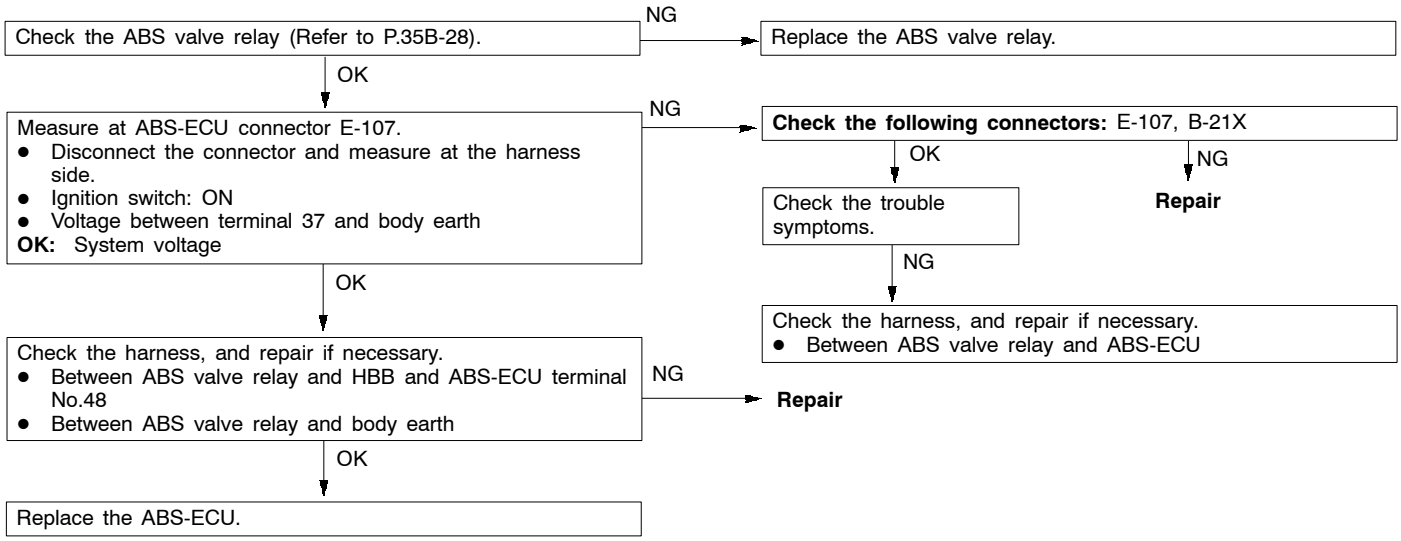


Purchased from www.WorkshopManuals.co.uk

www.WorkshopManuals.co.uk

| Code No. 52 Valve relay system (OFF problem) | Probable cause |
|---|---|
| This code is output if the ABS-ECU judges that there is a valve relay OFF problem when the valve relay is on and power is supplied to the solenoid valve. | ● Malfunction of harness or connector<br>● Malfunction of ABS valve relay<br>● Malfunction of the ABS-ECU |

NOTE
When reading the diagnosis codes using the ABS warning lamp (Refer to P.35B-5.), the valve relay connector is disconnected during inspection, with the result that this problem code will be output in addition to any other problem codes.
After the problem locations indicated by the problem diagnosis codes have been checked and repaired but the ABS warning lamp remains illuminated and no diagnosis codes other than code No. 52 are displayed, there is probably a malfunction of the valve relay system. In this case, carry out the following inspection.

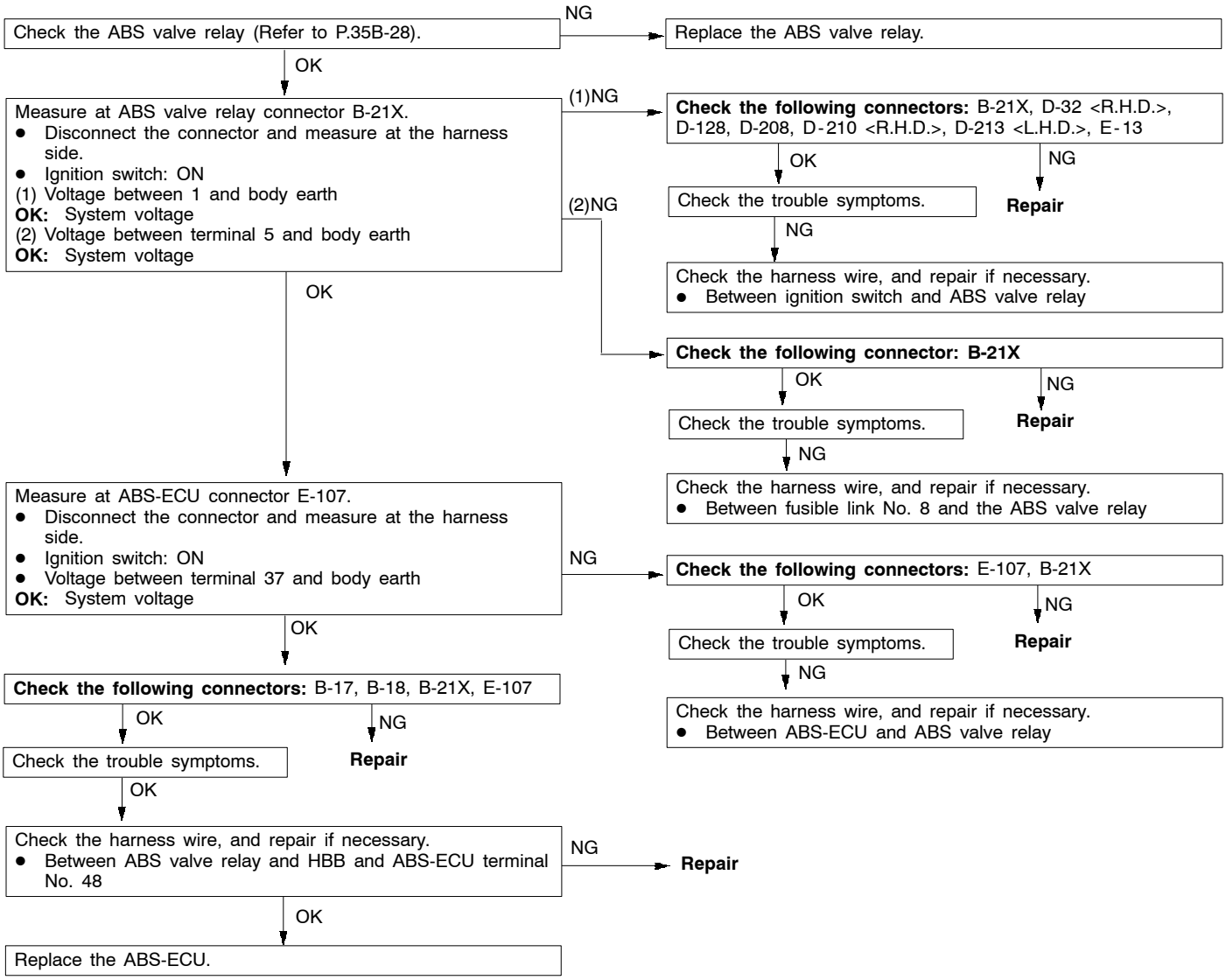


Purchased from www.WorkshopManuals.co.uk

www.WorkshopManuals.co.uk

## INSPECTION CHART FOR TROUBLE SYMPTOMS

| Trouble Symptom | Inspection procedure No. | Reference page |
|---|---|---|
| Communication with MUT-II is not possible. | 1 | 35B-18 |
| Communication with MUT-II and the ABS-ECU is not possible. | 2 | 35B-19 |
| The ABS warning lamp does not illuminate when the ignition key is turned to ON (engine stopped). | 3 | 35B-20 |
| The ABS warning lamp remains illuminated after the engine has started. | 4 | 35B-20 |
| The brake warning lamp does not illuminate when the ignition switch is turned ON (engine stopped). | Refer to GROUP 35A. | |
| The brake warning lamp remains illuminated after the engine has started. | | |
| Abnormal brake operation | 5 | 35B-21 |

**Caution**

**(1) Because the ABS may also operate at times when sudden braking is not being carried out, such as when driving on low frictional coefficient roads, when turning at high speed or during high-speed overtaking, check with the customer that the problems are not occurring when driving under conditions such as these.**

**(2) When the ABS is operating, changes in the brake pedal feel (vibration and difficulty depressing the pedal) may occur. This happens because the hydraulic pressure inside the brake line is continually changing in order to stop the wheels from locking up, and is not a malfunction.**

## INSPECTION PROCEDURES FOR TROUBLE SYMPTOMS

### Inspection procedure 1

| Communication with MUT-II is not possible. | Probable cause |
|---|---|
| The cause is probably a malfunction of the diagnosis connector power supply circuit or earth circuit. | ● Malfunction of diagnosis connector<br>● Malfunction of harness or connector |

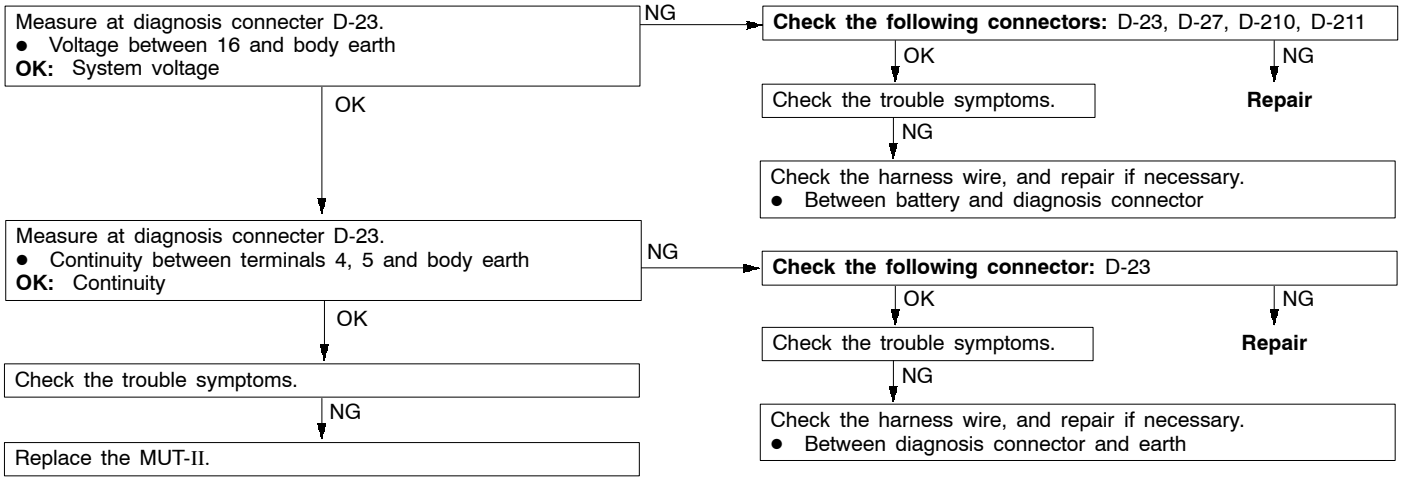


Purchased from www.WorkshopManuals.co.uk

www.WorkshopManuals.co.uk

## Inspection procedure 2

| Communication with MUT-II and the ABS-ECU is not possible. | Probable cause |
|---|---|
| The cause is probably an open circuit in the ABS-ECU power supply circuit or an open circuit in the diagnosis output circuit. | • Blown fuse<br>• Malfunction of harness or connector<br>• Malfunction of the ABS-ECU |

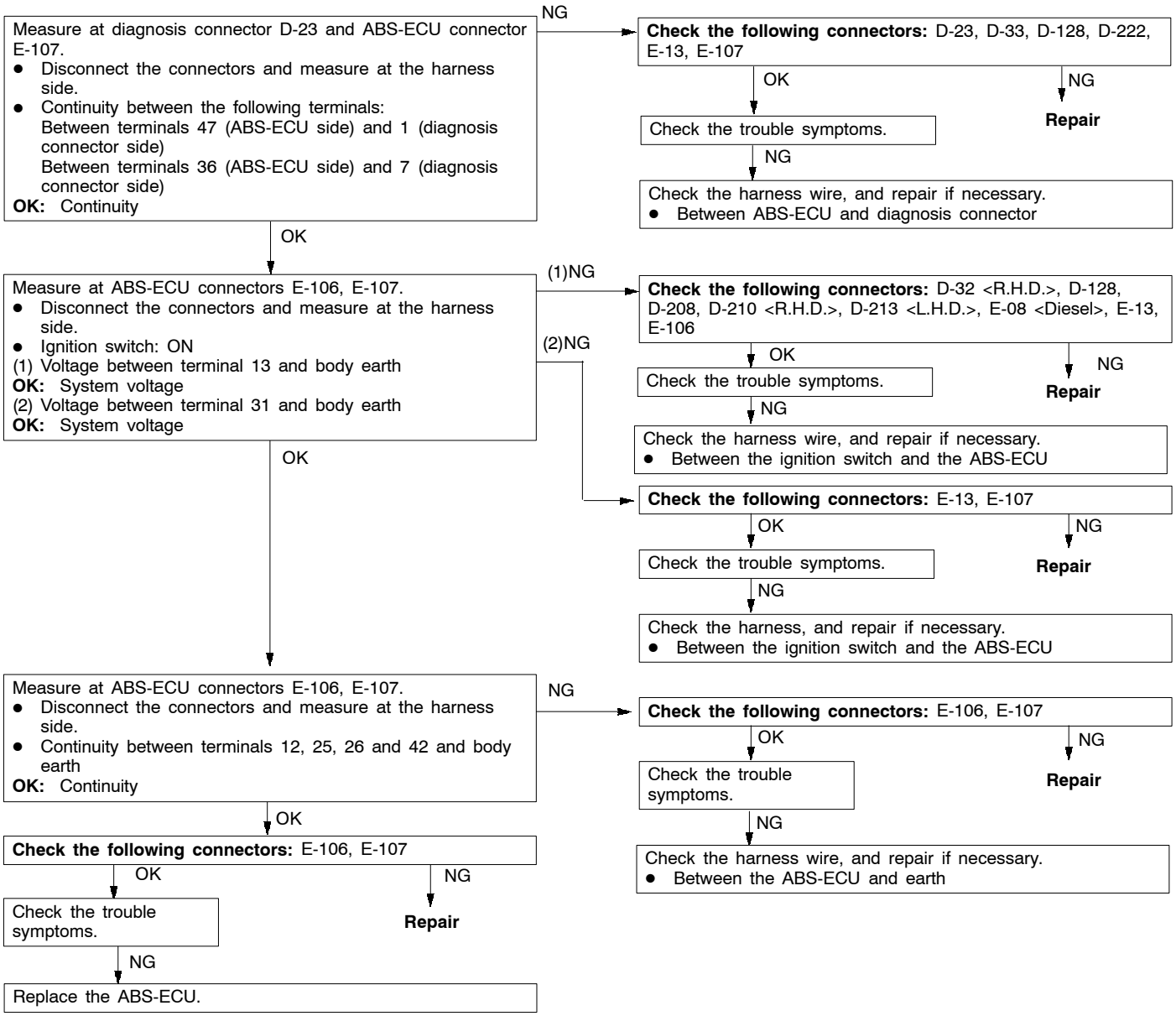


Purchased from www.WorkshopManuals.co.uk

www.WorkshopManuals.co.uk

## Inspection procedure 3

| The ABS warning lamp does not illuminate when the ignition key is turned to ON (engine stopped). | Probable cause |
|---|---|
| When power is first supplied to the ABS-ECU, the ABS-ECU turns the ABS-ECU valve relay from off to on, off and back to on again as part of its initial check. Accordingly, if the ABS warning lamp does not illuminate, the cause is probably an open circuit in the ABS warning lamp power supply circuit, a blown lamp bulb or an open circuit between the ABS warning lamp and the ABS-ECU. | • Blown fuse<br>• Blown ABS warning lamp bulb<br>• Malfunction of ABS valve relay<br>• Malfunction of harness or connector<br>• Malfunction of combination meter<br>• Malfunction of the ABS-ECU |

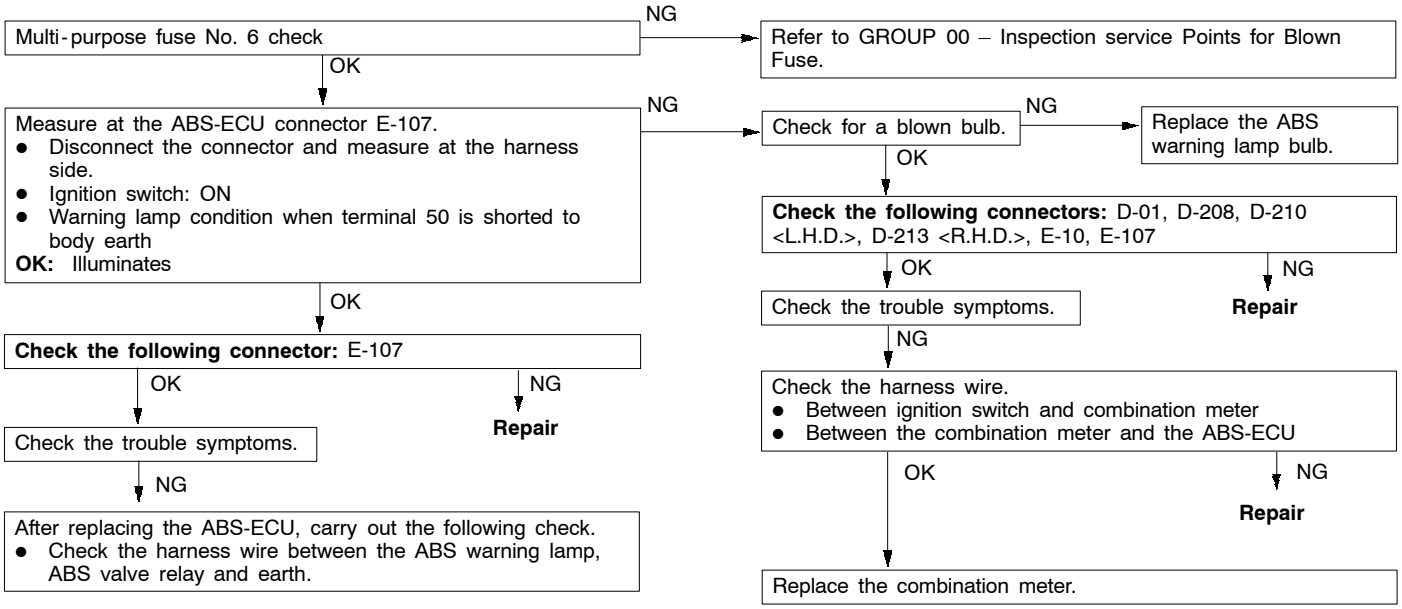


## Inspection procedure 4

| The ABS warning lamp remains illuminated after the engine has started. | Probable cause |
|---|---|
| The cause is probably a short-circuit in the ABS warning lamp illumination circuit. | • Malfunction of combination meter<br>• Malfunction of harness (short-circuit)<br>• Malfunction of the ABS-ECU |

NOTE
This trouble symptom is limited to cases where communication with the MUT-II is possible(ABS-ECU power supply is normal) and the diagnosis code is a normal diagnosis code.

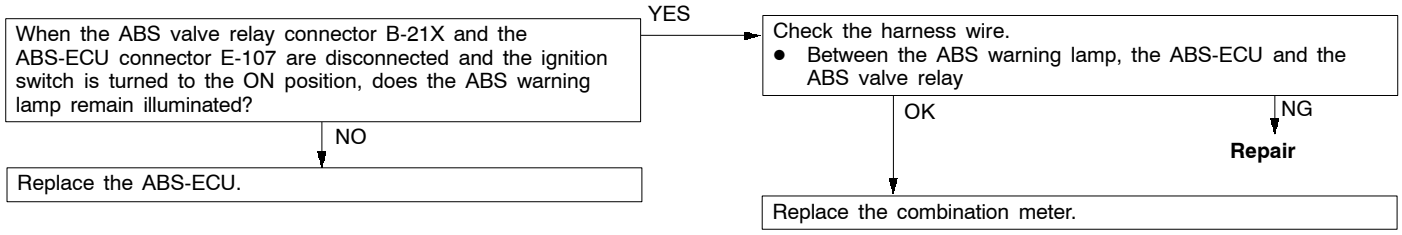


Purchased from www.WorkshopManuals.co.uk

www.WorkshopManuals.co.uk

## Inspection procedure 5

| Abnormal brake operation | Probable cause |
|---|---|
| Braking operation varies depending on the driving conditions and the road surface, which can make it difficult to diagnose a problem. However, if the diagnosis codes displayed are normal, carry out the following inspection procedure. | • Incorrect wheel speed sensor installation<br>• Malfunction of harness or connector<br>• Malfunction of wheel speed sensor<br>• Malfunction of ABS rotor<br>• Foreign material adhering to speed sensor<br>• Malfunction of wheel bearing<br>• Malfunction of HBB<br>• Malfunction of the ABS-ECU |

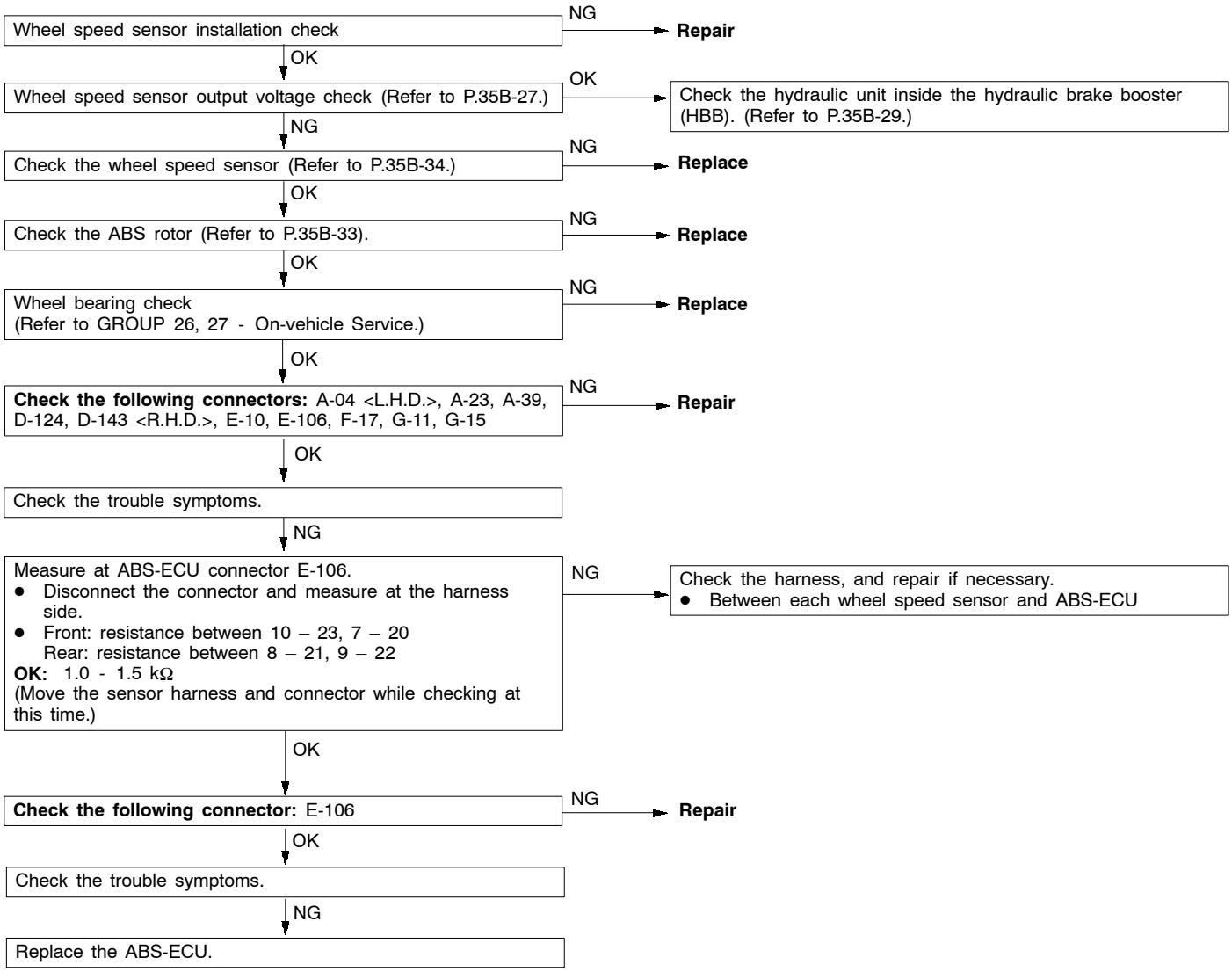


Purchased from www.WorkshopManuals.co.uk

www.WorkshopManuals.co.uk

## DATA LIST REFERENCE TABLE

The following ECU input data items can be read using the MUT-II.

(1) When system is normal

| Item No. | Check item | Inspection conditions | | Normal condition |
|---|---|---|---|---|
| 11 | Front-right wheel speed | When vehicle is being driven | | Speedometer display and MUT-II display are identical. |
| 12 | Front-left wheel speed | | | |
| 13 | Rear-right wheel speed | | | |
| 14 | Rear-left wheel speed | | | |
| 16 | System voltage | Ignition switch: ON | | 6.5-22.3 V |
| 26 | Center differential lock switch | Ignition switch: ON | Transfer selector lever position: 2H, 4H | OFF |
| | | | Transfer selector lever position: 4HLc, 4LLc | ON |
| 27 | Rear differential lock switch | Ignition switch: ON | | OFF |
| 32 | G sensor | ● Ignition switch: ON<br>● When vehicle is stationary (level) | | 2.4-2.6 V |
| | | When vehicle is being driven | | 1.0-4.0 V |
| 33 | Stop lamp Switch | Ignition switch: ON | When brake pedal is depressed | ON |
| | | | When brake pedal is released | OFF |

(2) When system is interrupted by the ECU
When the diagnosis function has caused the operation of the ABS-ECU to be stopped, the MUT-II display data may be different from the actual condition.

## ACTUATOR TEST TABLE

The following actuators can be force-driven using the MUT-II.

NOTE
(1) Actuator tests cannot be carried out when the operation of the ABS-ECU has been stopped by the fail-safe function.
(2) Actuator tests can only be carried out while the vehicle is stopped.

### ACTUATOR TEST SPECIFICATIONS

| Item No. | Check item | Drive Contents |
|---|---|---|
| 01 | FR wheel solenoid valve | HBB select solenoid valves and control solenoid valves for the respective channel |
| 02 | FL wheel solenoid valve | |
| 03 | RR wheel solenoid valve | |
| 04 | RL wheel solenoid valve | |
| 27 | Air bleeding (1) | HBB select solenoid valves and control solenoid valve OUT (FR, FL) |
| 28 | Air bleeding (2) | HBB control solenoid valve OUT (RR, RL) |

Purchased from www.WorkshopManuals.co.uk

www.WorkshopManuals.co.uk

**Item No. 01 - 04 drive pattern**

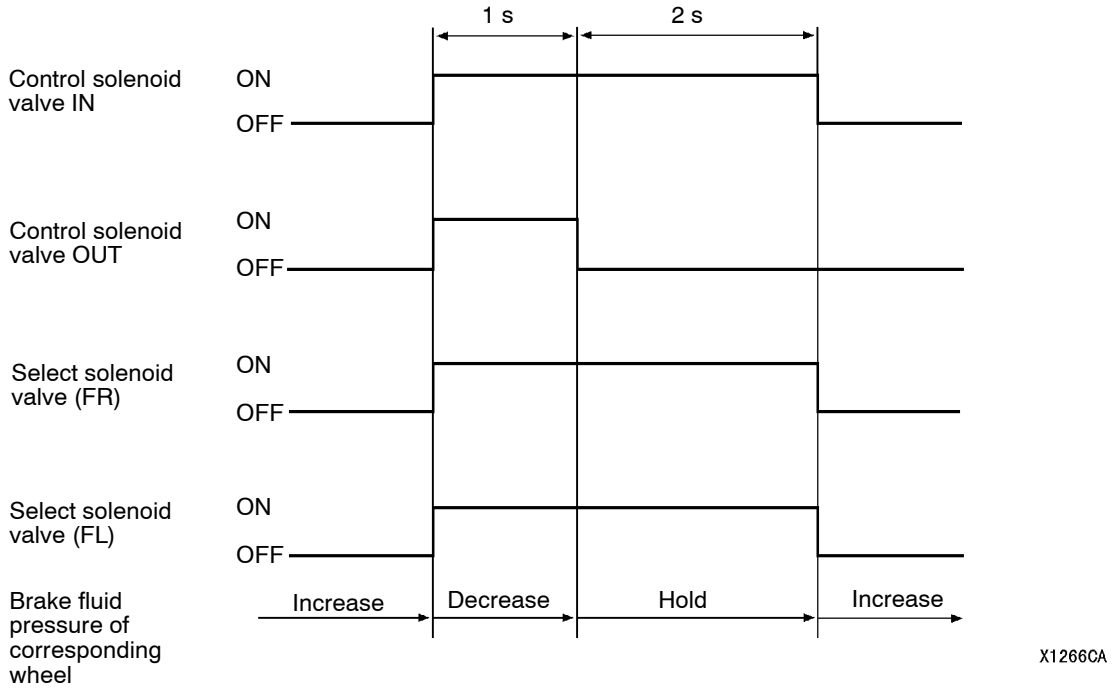


**Item No. 27, 28 drive pattern**

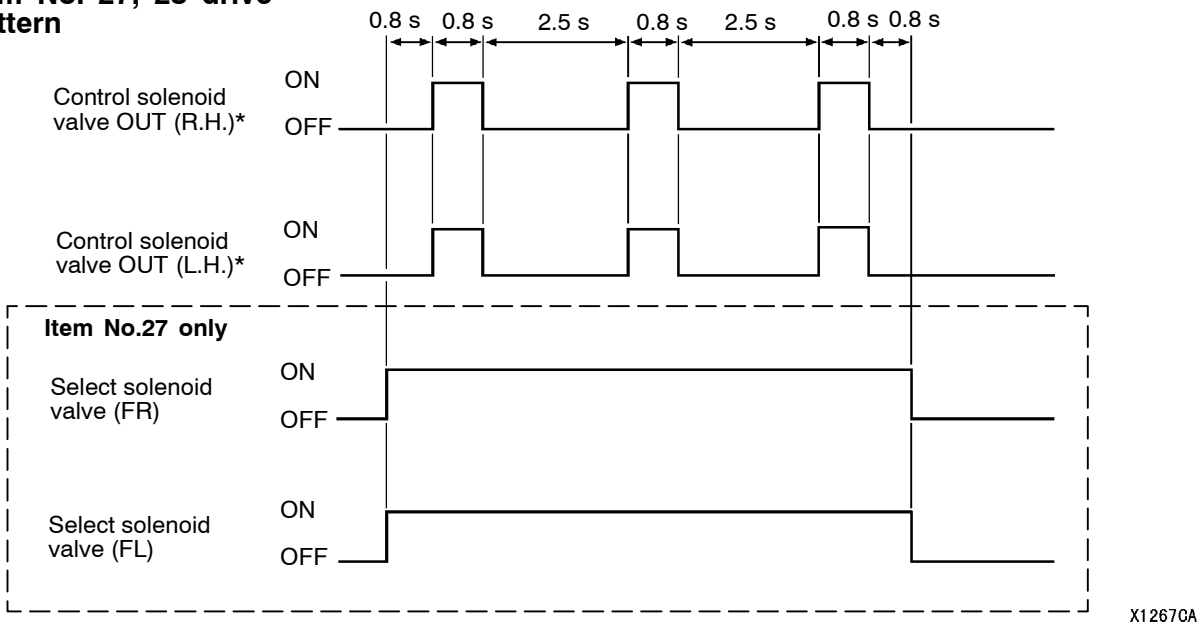


NOTE
*: When carrying out item No. 27, the front wheels are driven, and when carrying out item No. 28, the rear wheels are driven.

Purchased from www.WorkshopManuals.co.uk

www.WorkshopManuals.co.uk

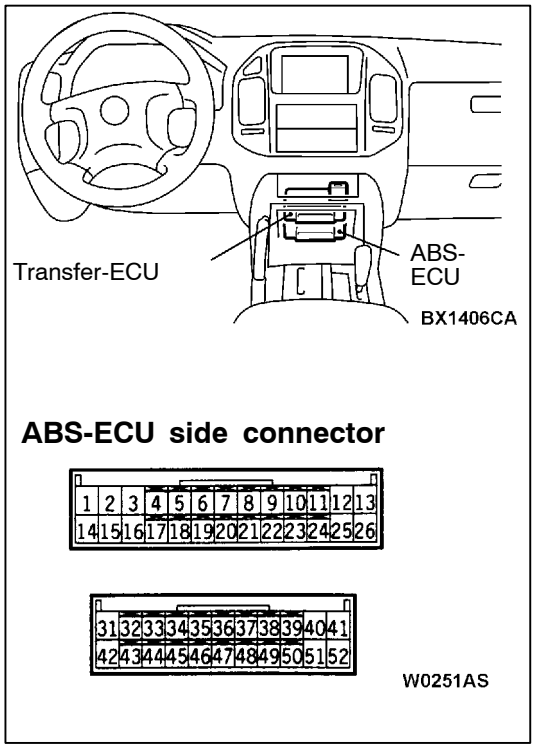


## CHECK AT ABS-ECU TERMINAL

### TERMINAL VOLTAGE TABLE

NOTE
There are two ECUs with the same shape inside the floor console, one above the other. The upper ECU is the ABS-ECU and has a blue connector. The lower ECU is the transfer-ECU and has a green connector.

(1) Measure the voltages between the respective terminal and earth.
(2) The terminal layout is shown in the illustration.

| Terminal No. | Check item | Inspection conditions | | Normal condition |
|---|---|---|---|---|
| 1 | Control solenoid valve OUT (FL) | Ignition switch: ON | | System voltage |
| 2 | Control solenoid valve OUT (RR) | Ignition switch: ON | | System voltage |
| 3 | Select solenoid valve (FL) | Ignition switch: ON | | System voltage |
| 4 | G sensor input | Ignition switch: ON<br>Vehicle horizontal position | | 2.4 - 2.6 V |
| 13 | ABS-ECU power supply | Ignition switch: ON | | System voltage |
| | | Ignition switch: START | | 0 V |
| 14 | Control solenoid valve IN (FL) | Ignition switch: ON | | System voltage |
| 15 | Control solenoid valve IN (RR) | Ignition switch: ON | | System voltage |
| 16 | Select solenoid valve (FR) | Ignition switch: ON | | System voltage |
| 18 | G sensor earth | At all times | | 0.5 V or less |
| 31 | ABS-ECU power supply | Ignition switch: ON | | System voltage |
| | | Ignition switch: START | | 0 V |
| 33 | Rear differential lock switch | Ignition switch: ON | | System voltage |
| 34 | Stop lamp switch input | Ignition switch: ON | Stop lamp switch: ON | System voltage |
| | | | Stop lamp switch: OFF | 2 V or less |
| 36 | MUT-II | When the MUT-II is connected | | Serial communication with the MUT-II |
| | | When the MUT-II is not connected | | 1 V or less |

Purchased from www.WorkshopManuals.co.uk

www.WorkshopManuals.co.uk

| Terminal No. | Check item | Inspection conditions | | Normal condition |
|---|---|---|---|---|
| 37 | ABS valve relay output | Ignition switch: ON | When system abnormality is detected and relay is off | System voltage |
| | | | When relay is on approx. 1 second after engine starts | 2 V or less |
| 39 | Brake warning lamp output | Ignition switch: ON | When lamp is switched off | 2 V or less |
| | | | When lamp is illuminated | System voltage |
| 40 | Control solenoid valve OUT (RL) | Ignition switch: ON | | System voltage |
| 41 | Control solenoid valve OUT(FR) | Ignition switch: ON | | System voltage |
| 46 | Center differential lock switch input <Super Select 4WD-II> | Ignition switch: ON | Transfer selector lever position: 2H, 4H | System voltage |
| | | | Transfer selector lever position: 4HLc, 4LLc | 2 V or less |
| | 4WD detection switch input <Part time 4WD> | Ignition switch: ON | Transfer selector lever position: 2H | System voltage |
| | | | Transfer selector lever position: 4H | 2 V or less |
| 47 | Diagnosis select input | When the MUT-II is connected | | 1 V or less |
| | | When the MUT-II is not connected | | Approx. 12 V |
| 48 | Valve relay monitor | Ignition switch: ON | | System voltage |
| 50 | ABS warning lamp output | Ignition switch: ON | When lamp is switched off | System voltage |
| | | | When lamp is illuminated | 2 V or less |
| 51 | Control solenoid valve IN (RL) | Ignition switch: ON | | System voltage |
| 52 | Control solenoid valve IN (FR) | Ignition switch: ON | | System voltage |

Purchased from www.WorkshopManuals.co.uk

www.WorkshopManuals.co.uk

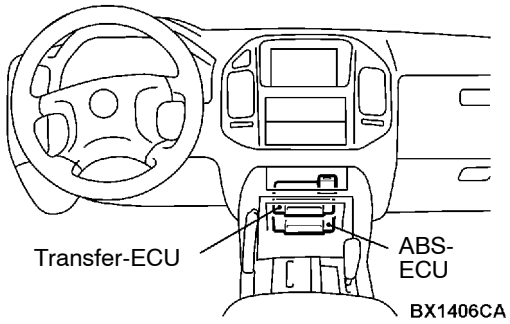


**Harness-side connector**

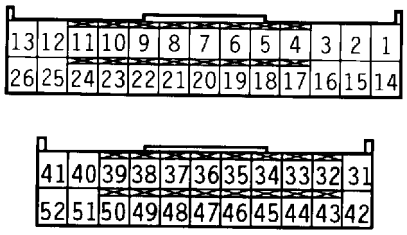


## CHECK CHART FOR RESISTANCE AND CONTINUITY BETWEEN TERMINALS

NOTE
There are two ECUs with the same shape inside the floor console, one above the other. Th upper ECU is the ABS-ECU and has a blue connector. The lower ECU is the transfer-ECU and has a green connector.

(1) Turn the ignition switch to the LOCK (OFF) position.
(2) Check the resistances and continuity with the ABS-ECU connector disconnected.
(3) Check the resistances and continuity between the terminals listed in the table below.
(4) The terminal layout is shown in the illustration.

| Terminal No. | Signal name | Normal condition |
|---|---|---|
| 7 - 20 | Wheel speed sensor (FL) | 1.0 - 1.5 kΩ |
| 8 - 21 | Wheel speed sensor (RR) | |
| 9 - 22 | Wheel speed sensor (RL) | |
| 10 - 23 | Wheel speed sensor (FR) | |
| Between terminal 12 and body earth | Earth | Continuity |
| Between terminal 25 and body earth | Earth | |
| Between terminal 26 and body earth | Earth | |
| Between terminal 42 and body earth | Earth | |

Purchased from www.WorkshopManuals.co.uk

www.WorkshopManuals.co.uk

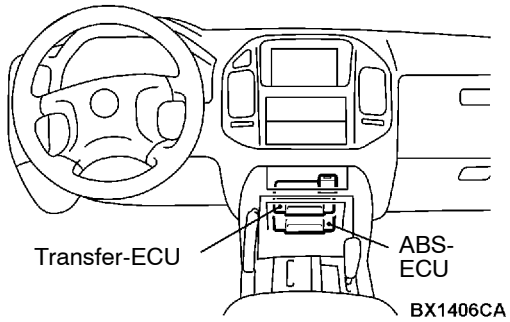


**Harness-side connector**

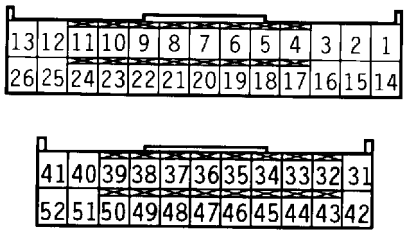


# ON-VEHICLE SERVICE

## WHEEL SPEED SENSOR OUTPUT VOLTAGE MEASUREMENT

NOTE
There are two ECUs with the same shape inside the floor console, one above the other. The upper ECU is the ABS-ECU and has a blue connector. The lower ECU is the transfer-ECU and has a green connector.

(1) Lift up the vehicle and release the parking brake.
(2) Disconnect the ABS-ECU connector and measure at the harness-side connector.
(3) Rotate the wheel to be measured by 1/2 to 1 turn , and use a multimeter (AC mV range) or an oscilloscope to check the output voltage at this time.

**Terminal No.**

| Front-left | Front-right | Rear-left | Rear-right |
|---|---|---|---|
| 7 | 10 | 9 | 8 |
| 20 | 23 | 22 | 21 |

**Output voltage:**
**42 mV or higher when measured using a multimeter**
**120 mVP-P or more when measured using an oscilloscope**

(4) If the output voltage is lower than that given above, the cause may be the following, so check or replace the wheel speed sensor if necessary.
- Excessive clearance between pole piece of wheel speed sensor and ABS rotor
- Malfunction of wheel speed sensor

**When rotated by hand**

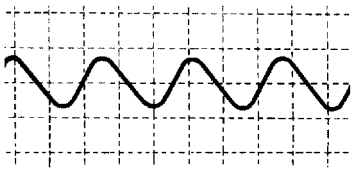

**When engine is idling (5 - 6 km/h)**
**D range (A/T) or 1st gear (M/T)**

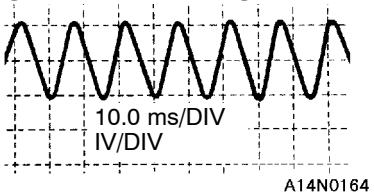


### WAVE PATTERN INSPECTION USING AN OSCILLOSCOPE

After checking the connection of the wheel speed sensor harness and the connector, take a reading of the output voltage wave patterns for each wheel speed sensor using an oscilloscope as follows.
Start the engine, move the transfer selector lever to the 4H position and the transmission selector lever to D range (A/T) or 1st gear (M/T), and then spin the wheel.

NOTE
(1) You can also take a reading of the wave pattern by actually driving the vehicle in this condition.
(2) The output voltage will be lower when the wheel speed is lower, and will become higher as the wheel speed becomes higher.

Purchased from www.WorkshopManuals.co.uk

www.WorkshopManuals.co.uk

## WAVE PATTERN OBSERVATION POINTS

| Symptom | Cause | Remedy |
|---|---|---|
| Wave pattern amplitude is too small or is non-existent. | Malfunction of wheel speed sensor | Replace the sensor. |
| Excessive variation in wave pattern amplitude (However, this is not a problem if the minimum amplitude is 120 mV or higher.) | Excessive axle hub runout or offset | Replace the hub. |
| | Malfunction of ABS-ECU earth | Repair |
| Noise appearing in wave pattern, or distorted wave pattern | Open circuit in sensor | Replace the sensor. |
| | Open circuit in harness | Repair the harness. |
| | Incorrect wheel speed sensor installation | Install the sensor correctly. |
| | Chipped or broken ABS rotor teeth | Replace the ABS rotor. |

**Caution**
**The wheel speed sensor cables move together with the movement of the front and rear suspension. Accordingly, you should shake the sensor harnesses while observing the wheel speed sensor output voltage wave patterns.**

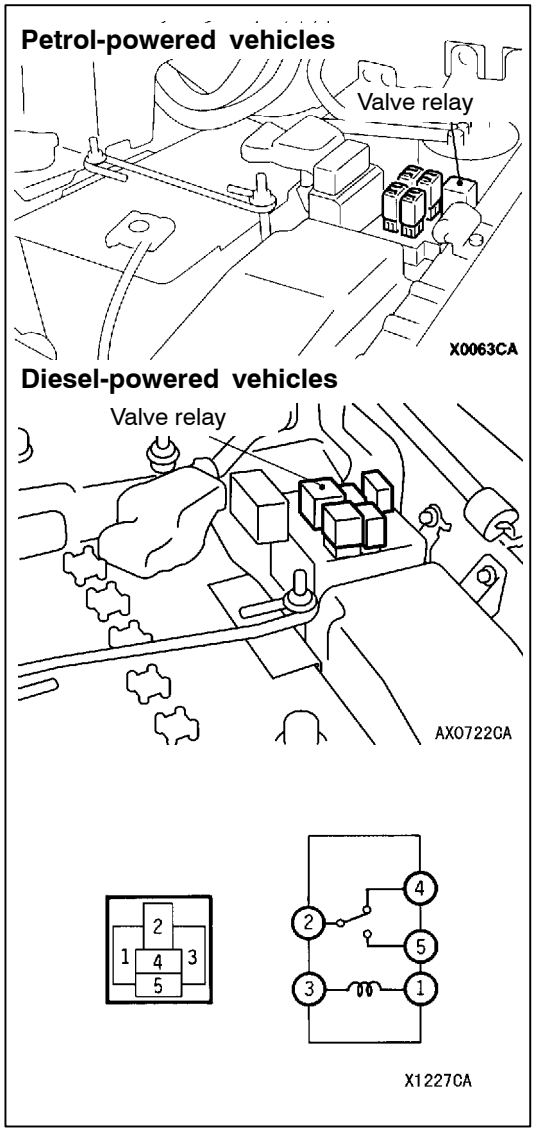


## ABS VALVE RELAY CONTINUITY CHECK

| Battery voltage | Terminal No. 1 | 2 | 3 | 4 | 5 |
|---|---|---|---|---|---|
| When no current is supplied | ○ | ○ | ○ | ○ | |
| When current is supplied | ⊕ | ○ | ⊖ | | ○ |

Purchased from www.WorkshopManuals.co.uk

www.WorkshopManuals.co.uk

## HYDRAULIC BRAKE BOOSTER (HBB) - HYDRAULIC UNIT CHECK

**Caution**
**Turn the ignition switch to the LOCK (OFF) position when connecting and disconnecting the MUT-II.**

(1) Jack up the vehicle, and support it in the specified location using a rigid rack, or place the vehicle on the rollers of a brake force tester.

**Caution**
**1. The rollers of the brake force tester and the vehicle tyres should be dry during checking.**
**2. If using a brake force tester, apply the parking brake when testing the front brakes, and use a wheel lock to lock the front wheels when testing the rear brakes.**

(2) Turn the ignition switch to the LOCK (OFF) position, and connect the MUT-II to the diagnosis connector.
(3) After checking that the selector lever is in the N position, start the vehicle's engine.
(4) Operate the MUT-II to carry out the actuator tests.

NOTE
1) When actuator tests are being carried out, the ABS warning lamp will illuminate and ABS control will be stopped.
2) MUT-II actuator tests cannot be carried out when the operation of the ABS-ECU has been stopped by the fail-safe function.

(5) Rotate the wheel by hand and check that the brake force changes when the brake pedal is depressed. If using a brake force tester, depress the brake pedal until the brake force reaches the following value, and then cheek that the brake force changes when the actuator test is carried out.

| | |
|---|---|
| Front wheels | 785 - 981 N |
| Rear wheels | 785 - 981 N |

**Caution**
**The solenoid valves should be driven one wheel at a time, and the brake pedal should be released each time a wheel is checked.**
The following illustration shows this in graphical form.

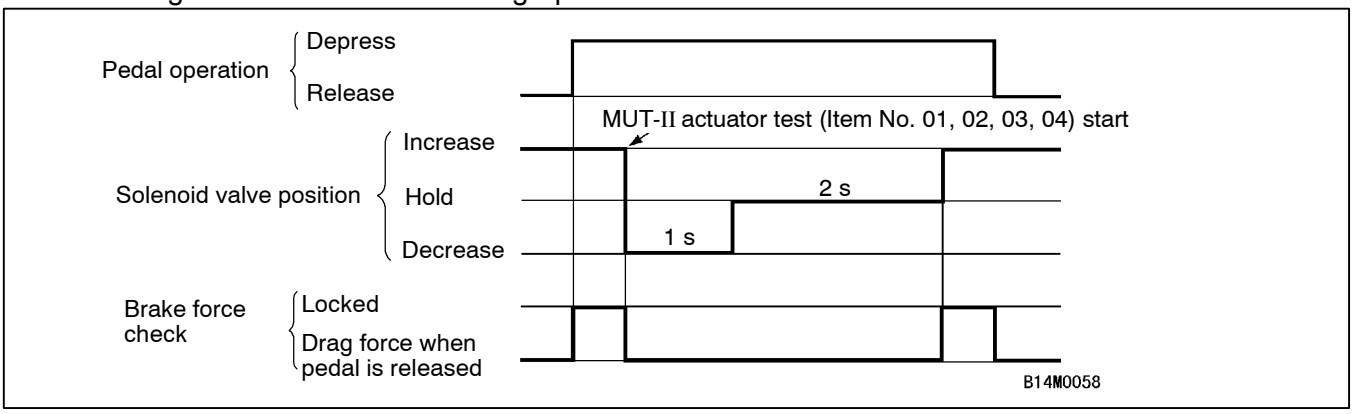


Purchased from www.WorkshopManuals.co.uk

www.WorkshopManuals.co.uk

(6) If the results of checking show an abnormality, fix the problem by following the “Judgment Table” below.

**Judgment Table**

| No. | MUT-II display | Operation | Judgment | | Cause | Remedy |
|---|---|---|---|---|---|---|
| | | | Normal | Problem | | |
| 01 | FR valve | (1) Depress the brake pedal to lock the wheels.<br>(2) Use the MUT-II to select the wheel to be checked, and then force-drive the actuator.<br>(3) Check the brake force for the selected wheel using a brake force tester or by rotating the wheel by hand. | Brake force lessens for 3 seconds after locking. | Wheel does not lock when brake pedal is depressed. | Blocked brake line other than HBB line | Check and clean the brake line. |
| 02 | FL valve | | | | Blocked hydraulic circuit inside HBB | Replace the HBB. |
| 03 | RR valve | | | Brake force does not lessen. | HBB brake tubes connected incorrectly | Connect the tubes correctly. |
| 04 | RL valve | | | | Malfunction of HBB solenoid valve | Replace the HBB. |

(7) After checking, turn the ignition switch to the LOCK (OFF) position and then disconnect the MUT-II.

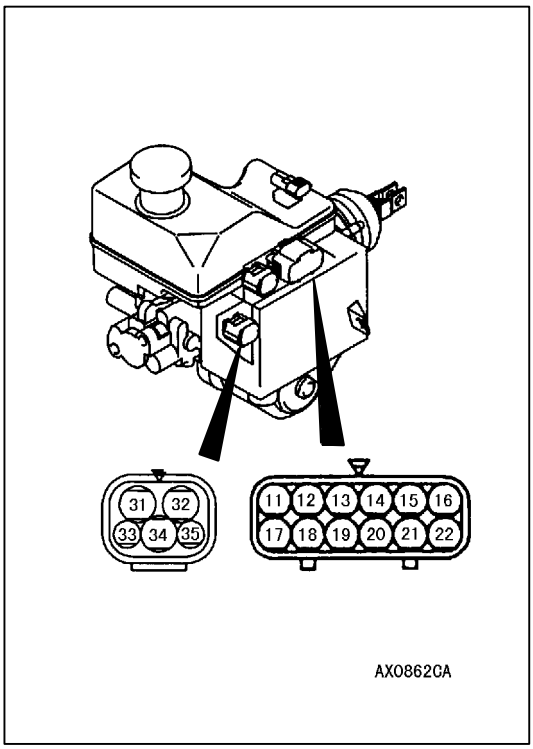


## SOLENOID VALVE CHECK

Measure the resistance between the following solenoid valve terminals.

- Control solenoid valve IN (FR):
  Between terminals 19 - 34
- Control solenoid valve OUT (FR):
  Between terminals 20 - 34
- Control solenoid valve IN (FL)
  : Between terminals 21 - 34
- Control solenoid valve OUT (FL)
  : Between terminals 22 - 34
- Control solenoid valve IN (RR)
  : Between terminals 15 - 34)
- Control solenoid valve OUT (RR)
  : Between terminals 16 - 34
- Control solenoid valve IN (RL)
  : Between terminals 13 - 34
- Control solenoid valve OUT (RL)
  : Between terminals 14 - 34
- Select solenoid valve (FR)
  : Between terminals 18 - 34
- Select solenoid valve (FL)
  : Between terminals 17 - 34

**Standard value:**

**Control solenoid valve IN: 4.75 - 5.25 Ω**
**Control solenoid valve OUT: 2.0 - 2.4 Ω**
**Select solenoid valve: 3.5 - 3.9 Ω**

Purchased from www.WorkshopManuals.co.uk

www.WorkshopManuals.co.uk

## WHEN THE BATTERY IS FLAT

If the engine is started using a booster cable when the battery is completely flat, and the vehicle is then driven without waiting for the battery to be recharged, the engine may misfire and it may not be possible to drive the vehicle. This is because the ABS consumes a large amount of current when carrying out its initial checks. If this happens, recharge the battery fully.

**Caution**

**The vehicle posture will be unstable during braking, so do not drive the vehicle with the ABS-ECU connector disconnected or with the ABS not operating for any other reason.**

Purchased from www.WorkshopManuals.co.uk

www.WorkshopManuals.co.uk

# ABS-ECU

## REMOVAL AND INSTALLATION

**Pre-removal and Post-installation Operations**
Indicator panel and front panel removal and installation
(Refer to GROUP 52A - Floor Console.)

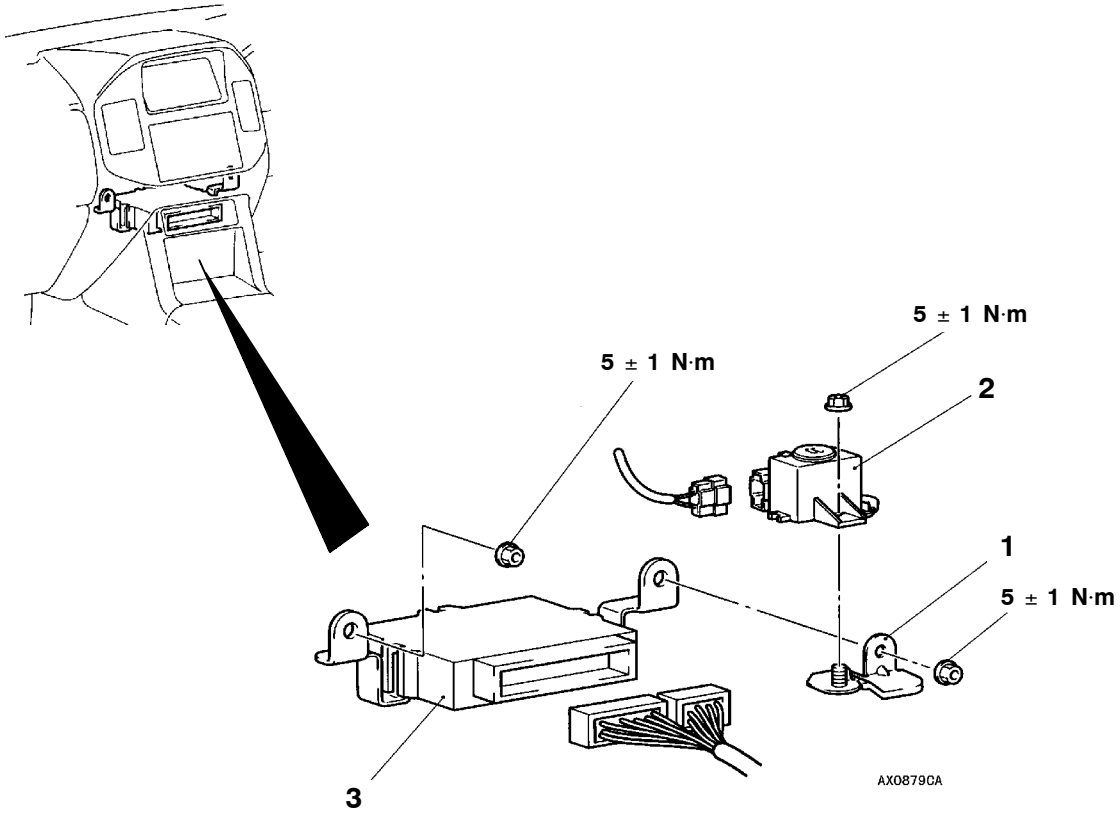


**Removal steps**

1. Buzzer bracket
2. Buzzer
3. ABS-ECU

Purchased from www.WorkshopManuals.co.uk

www.WorkshopManuals.co.uk

# WHEEL SPEED SENSOR

## REMOVAL AND INSTALLATION

**Post-installation Operations**
Wheel speed sensor output voltage measurement (Refer to P.35B-27.)

**Front**

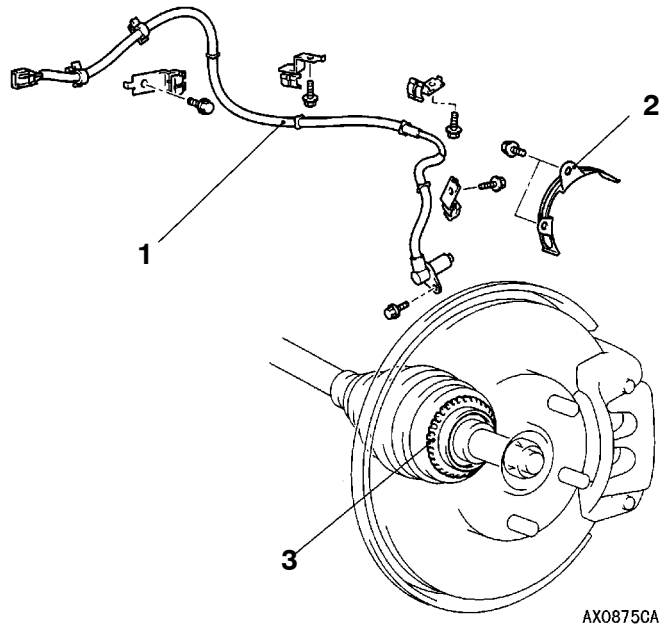


**Front wheel speed sensor removal steps**

◀A▶
1. Front wheel speed sensors
2. Front ABS rotor protector
3. Front ABS rotor
   (Refer to GROUP 26 - Drive Shaft.)

**Rear**

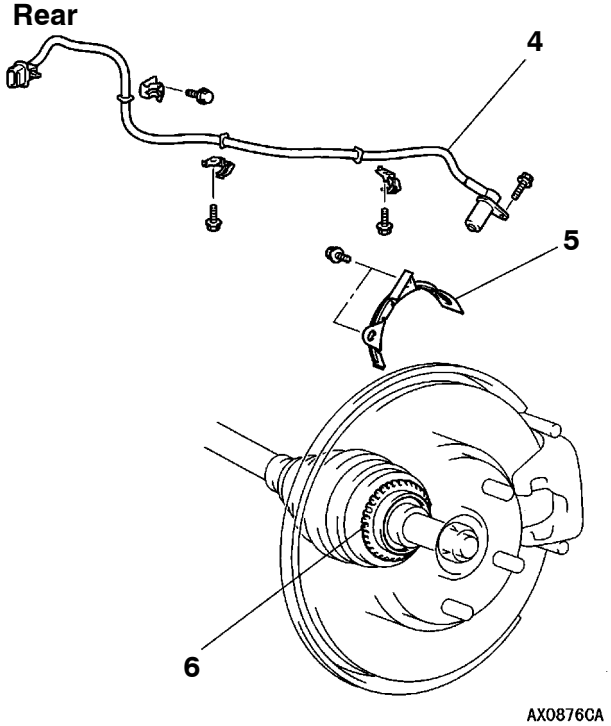


**Rear wheel speed sensor removal steps**

◀B▶
4. Rear wheel speed sensor
5. Rear ABS rotor protector
6. Rear ABS rotor
   (Refer to GROUP 27 - Drive Shaft.)

NOTE
The front and rear ABS rotors are integrated with the drive shaft and cannot be disassembled.

Purchased from www.WorkshopManuals.co.uk

www.WorkshopManuals.co.uk

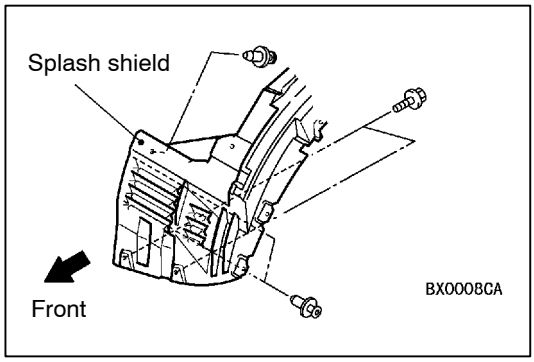


## REMOVAL SERVICE POINTS

### ◀A▶ FRONT WHEEL SPEED SENSOR REMOVAL

(1) Remove the three splash shield clips and the two bolts shown in the illustration, and then disconnect the front wheel speed sensor connector.
(2) Remove the front wheel speed sensor.

**Caution**
**When removing the wheel speed sensor, be careful not to strike the pole piece at the end against the teeth of the ABS rotor or against any other nearby parts.**

### ◀B▶ REAR WHEEL SPEED SENSOR REMOVAL

**Caution**
**When removing the wheel speed sensor, be careful not to strike the pole piece at the end against the teeth of the ABS rotor or against any other nearby parts.**

## INSPECTION

### WHEEL SPEED SENSOR TERMINAL RESISTANCE CHECK

**Caution**
**The wheel speed sensors have magnets built into the sensors which magnetize the pole pieces. Because of this, care should be taken not to let metallic foreign particles get onto the pole pieces. In addition, if the poles become damaged, the sensors may not be able to detect the wheel speed correctly.**

Purchased from www.WorkshopManuals.co.uk

www.WorkshopManuals.co.uk

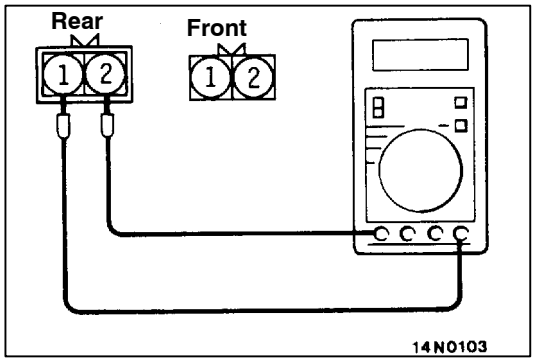


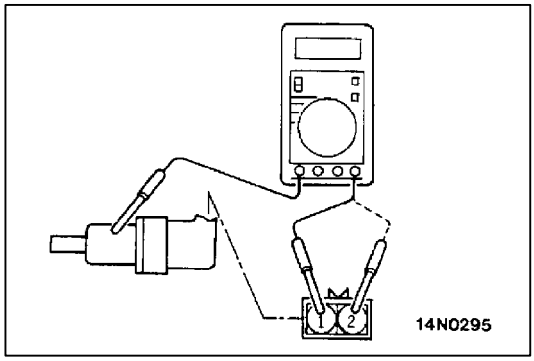


(1) Measure the resistance between the wheel speed sensor terminals.

**Standard value: 1.0 - 1.5 kΩ**

If the internal wheel speed sensor resistance is outside the standard value range, replace the wheel speed sensor with a new one.

(2) Check for open circuits in the wheel speed sensor cable. If a problem is found, replace the cable with a new one.

NOTE
When carrying out open circuit checks, remove the cable clamps from the vehicle, and flex the cable near the clamp locations to see if there are any transient open circuits. Also check the connection of the connector and that the terminals are inserted correctly.

**WHEEL SPEED SENSOR INSULATION CHECK**

(1) After removing the wheel speed sensor, measure the insulation resistance between terminals (1) and (2) and the wheel speed sensor body.

**Standard value: 100 kΩ or more**

(2) If the wheel speed sensor insulation resistance is outside the standard value range, replace the sensor with a new one.

**ABS ROTOR CHECK**

Check that none of the ABS rotor teeth are chipped, broken or bent. If any damage is found, replace the ABS rotor with a new one.

Purchased from www.WorkshopManuals.co.uk

www.WorkshopManuals.co.uk

# G SENSOR

## REMOVAL AND INSTALLATION

**Caution**
**Do not drop the G sensor or subject it to any shocks.**

**Pre-removal and Post-installation Operations**
Floor console removal and installation
(Refer to GROUP 52A.)

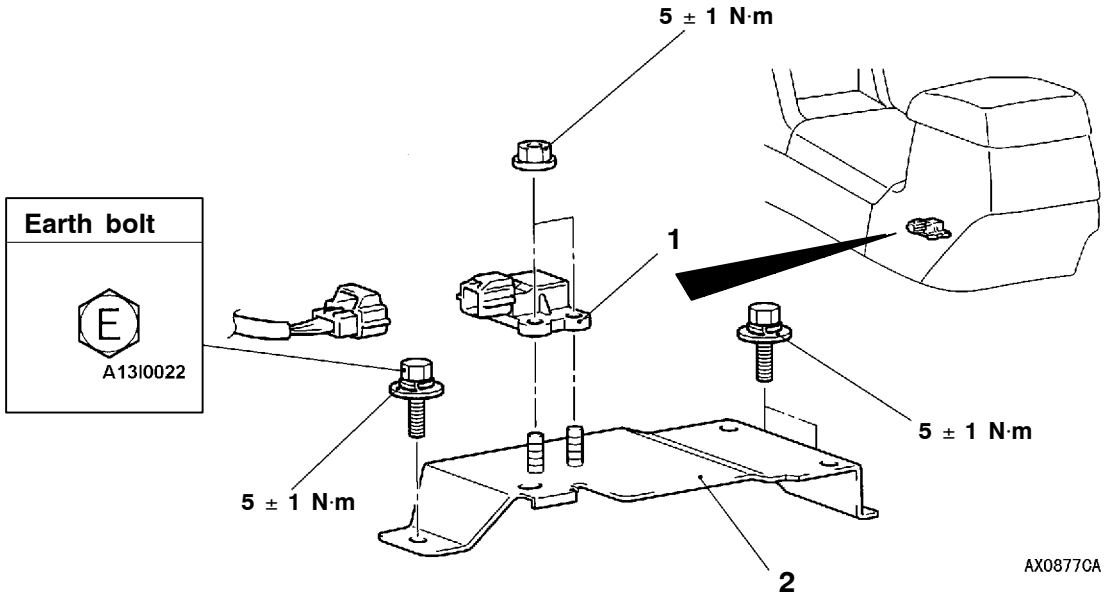


**Removal steps**
1. G sensor
2. G sensor bracket

Purchased from www.WorkshopManuals.co.uk

www.WorkshopManuals.co.uk

# PARKING BRAKES

**Click on the applicable bookmark to selected the required model year.**

Purchased from www.WorkshopManuals.co.uk

www.WorkshopManuals.co.uk


# PARKING BRAKES

## CONTENTS

**GENERAL INFORMATION** . . . . . 2

**SERVICE SPECIFICATIONS** . . . . . 2

**LUBRICANTS** . . . . . 2

**SEALANT** . . . . . 3

**ON-VEHICLE SERVICE** . . . . . 3

Parking Brake Lever Stroke Check and Adjustment . . . . . 3

Parking Brake Switch Check . . . . . 4

Lining Running-In . . . . . 4

**PARKING BRAKE LEVER** . . . . . 5

**PARKING BRAKE CABLE** . . . . . 6

**PARKING BRAKE DRUM** . . . . . 7

Purchased from www.WorkshopManuals.co.uk

www.WorkshopManuals.co.uk

# GENERAL INFORMATION

The parking brake is of a mechanical control type acting on the rear wheels. A lever is used to apply the parking brake.

## CONSTRUCTION DIAGRAM

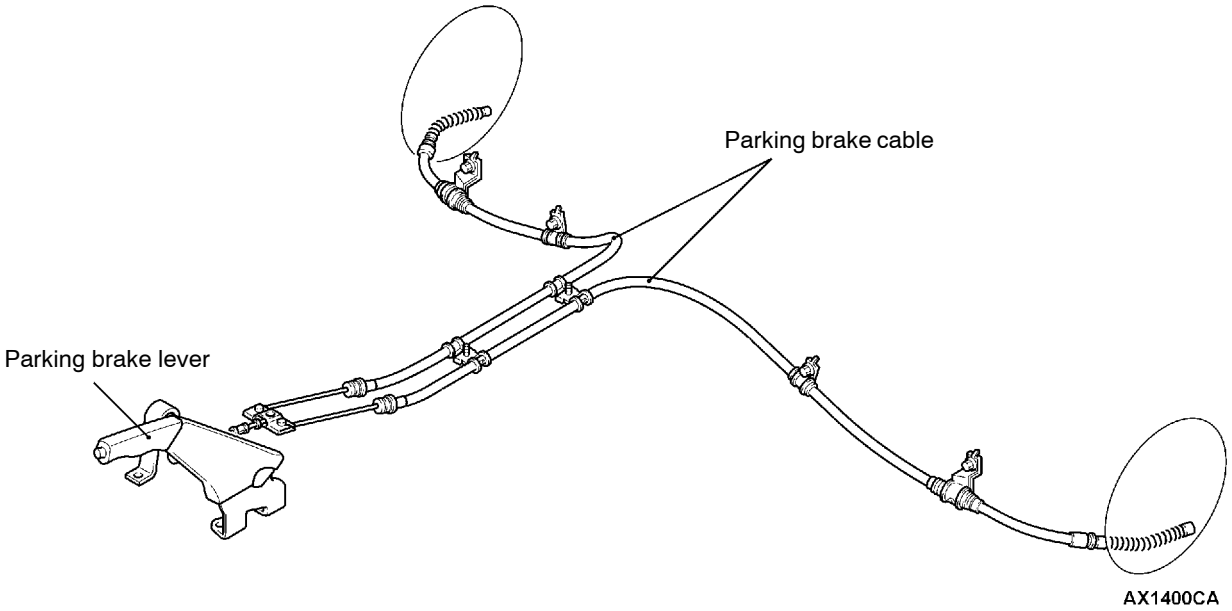


# SERVICE SPECIFICATIONS

| Items | Standard value | Limit |
|---|---|---|
| Parking brake lever stroke | 5 - 7 notches | - |
| Rear brake lining thickness mm | 3.0 | 1.0 |
| Rear drum inside diameter mm | 199.0 | 200.0 |

# LUBRICANTS

| Items | Specified lubricants |
|---|---|
| Backing plate | Multipurpose grease |
| Shoe and lining assembly | |
| Adjuster | |

Purchased from www.WorkshopManuals.co.uk

www.WorkshopManuals.co.uk

## SEALANT

| Items | Specified lubricants | Remarks |
|---|---|---|
| Shoe hold-down pin | 3M ATD Part No. 8513 or equivalent | Drying sealant |

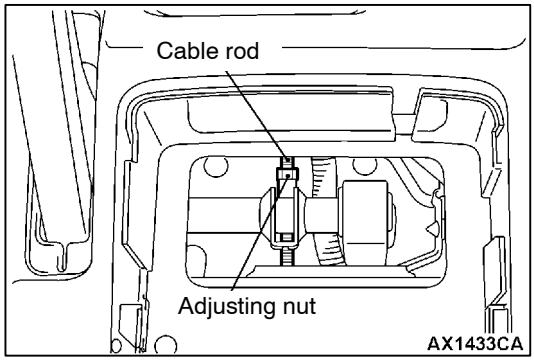


## ON-VEHICLE SERVICE

### PARKING BRAKE LEVER STROKE CHECK AND ADJUSTMENT

1. Pull the parking brake lever with a force of approx. 200 N and count the number of notches.

   **Standard value: 5 - 7 notches**

2. If the parking brake lever stroke is not the standard value, adjust as described below.
   (1) Remove the cup holder, and then loosen the adjusting nut to move it to the cable rod end so that the cable will be free.
   (2) Remove the rear wheels.

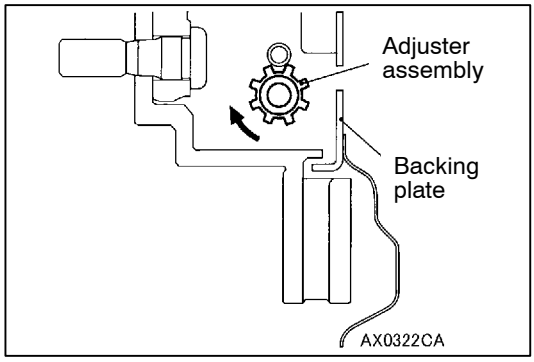


   (3) Remove the adjustment hole plug on the rear brake backing plate, and then use a flat-tip (-) screwdriver to turn the adjuster in the direction of the arrow (the direction which expands the shoe) so that the disc will not rotate.
   Return the adjuster three or four notches in the direction opposite to the direction of the arrow.
   (4) Turn the adjusting nut to adjust the parking brake lever stroke to the standard value. After adjusting, check that there is no space between the adjusting nut and the parking brake lever.

   **Caution**
   **If the parking brake lever stroke is below the standard value and the braking is too firm, the rear brakes may drag.**

   (5) Release the parking brake and turn the rear wheels to check that the rear brakes are not dragging.

Purchased from www.WorkshopManuals.co.uk

www.WorkshopManuals.co.uk

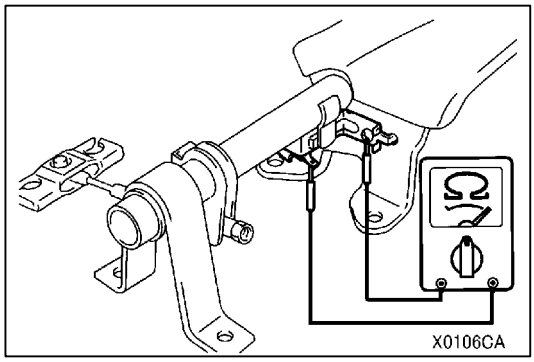


## PARKING BRAKE SWITCH CHECK

1. Remove the cup holder and indicator panel.
2. Check for continuity between the parking brake switch terminal and the switch mounting bolt.

| | |
|---|---|
| When parking brake lever is pulled | Continuity |
| When parking brake lever is released | No continuity |

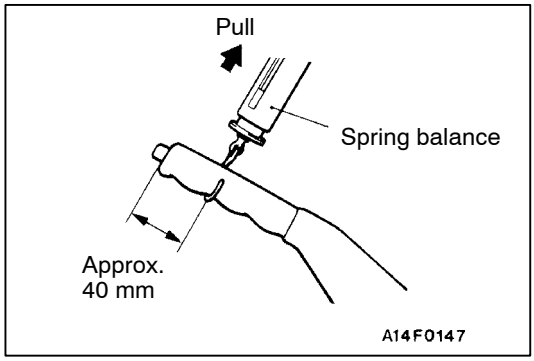


## LINING RUNNING-IN

Carry out running-in by the following procedure when replacing the parking brake linings or the rear brake disc rotors, or when brake performance is insufficient.

**Caution**
**Carry out running-in in a place with good visibility, and pay careful attention to safety.**

1. Adjust the parking brake stroke to the specified value.

   **Standard value [Operation force: Approx. 200 N] : 5 - 7 notches**

2. Hook a spring balance onto the centre of the parking brake lever grip and pull it with a force of 100 - 150 N in a direction perpendicular to the handle.
3. Drive the vehicle at a constant speed of 35 - 50 km/h for 100 metres.
4. Release the parking brake and let the brakes cool for 5 - 10 minutes.
5. Repeat the procedure in steps 2 to 4 four or five times.

Purchased from www.WorkshopManuals.co.uk

www.WorkshopManuals.co.uk

# PARKING BRAKE LEVER

## REMOVAL AND INSTALLATION

**Pre-removal Operation**
Floor Console Removal (Refer to GROUP 52A.)

**Post-installation Operation**
- Parking Brake Lever Stroke Adjustment (Refer to P.36-3.)
- Floor Console Installation (Refer to GROUP 52A.)

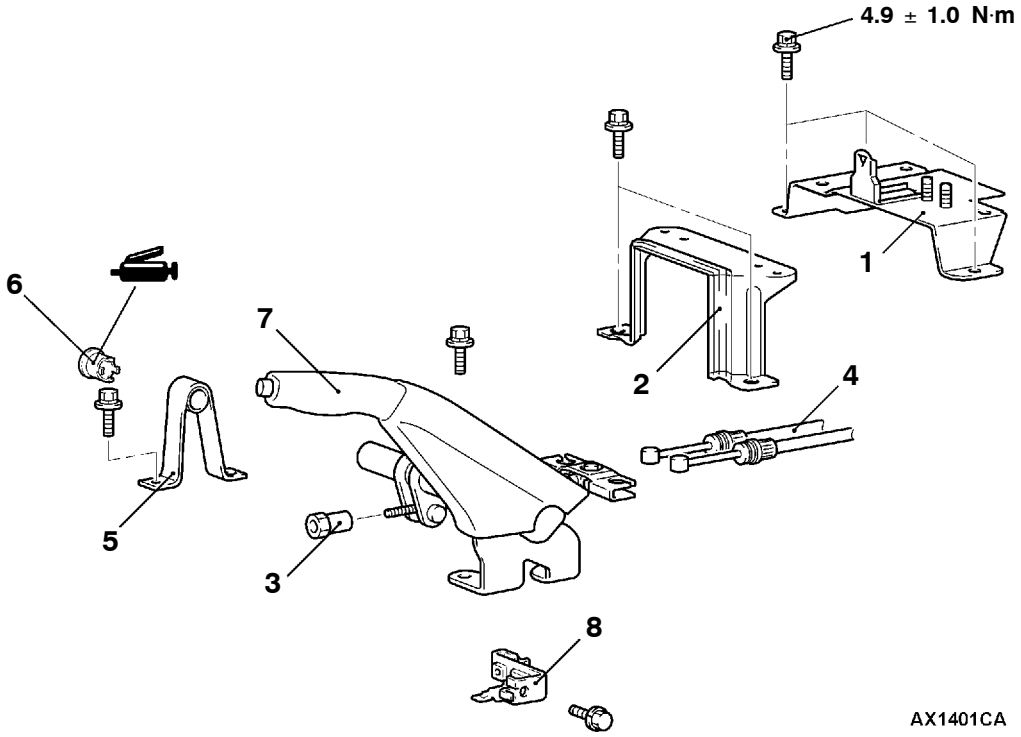


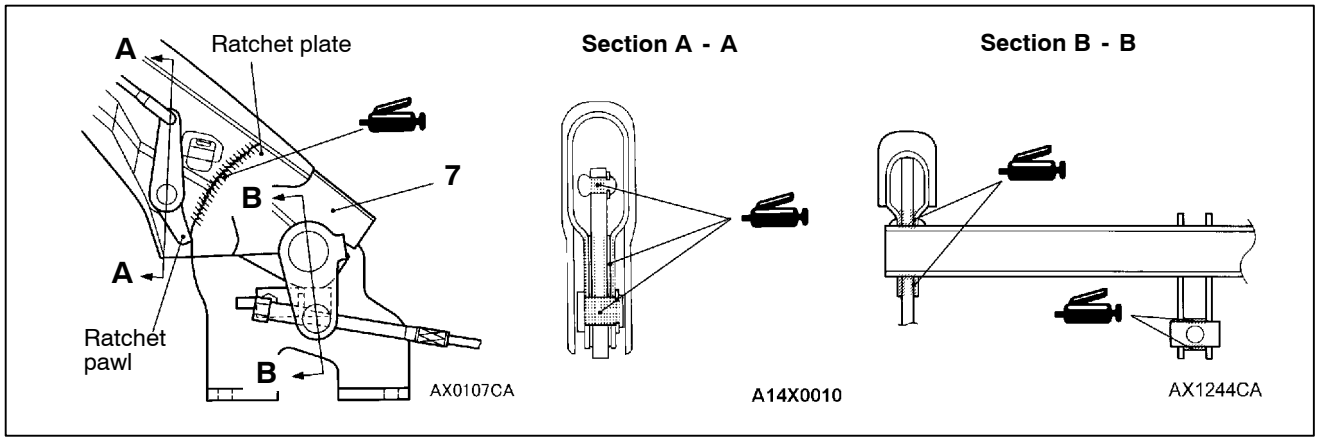


**Removal steps**

1. G sensor bracket
2. Floor console bracket
3. Adjusting nut
4. Parking brake cable assembly connection
5. Parking brake stay
6. Bushing
7. Parking brake lever assembly
8. Parking brake switch

Purchased from www.WorkshopManuals.co.uk

www.WorkshopManuals.co.uk

# PARKING BRAKE CABLE

## REMOVAL AND INSTALLATION

**Pre-removal Operation**
Floor Console Removal (Refer to GROUP 52A.)

**Post-installation Operation**
- Parking Brake Lever Stroke Check and Adjustment (Refer to P.36-3.)
- Floor Console Installation (Refer to GROUP 52A.)

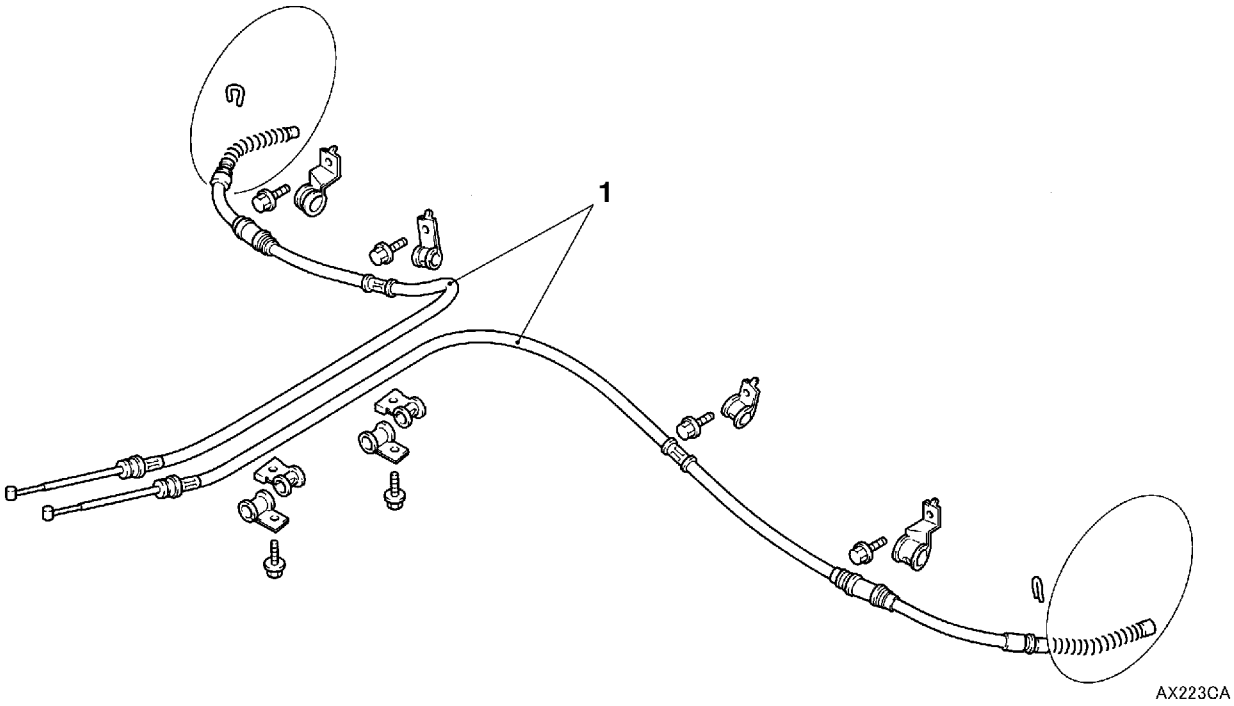


**Removal steps**
- Shoe and lining assembly (Refer to P.36-7.)
- Parking brake cable assembly connection (Refer to P.36-5.)

1. Parking brake cable

Purchased from www.WorkshopManuals.co.uk

www.WorkshopManuals.co.uk

# PARKING BRAKE DRUM

## REMOVAL AND INSTALLATION

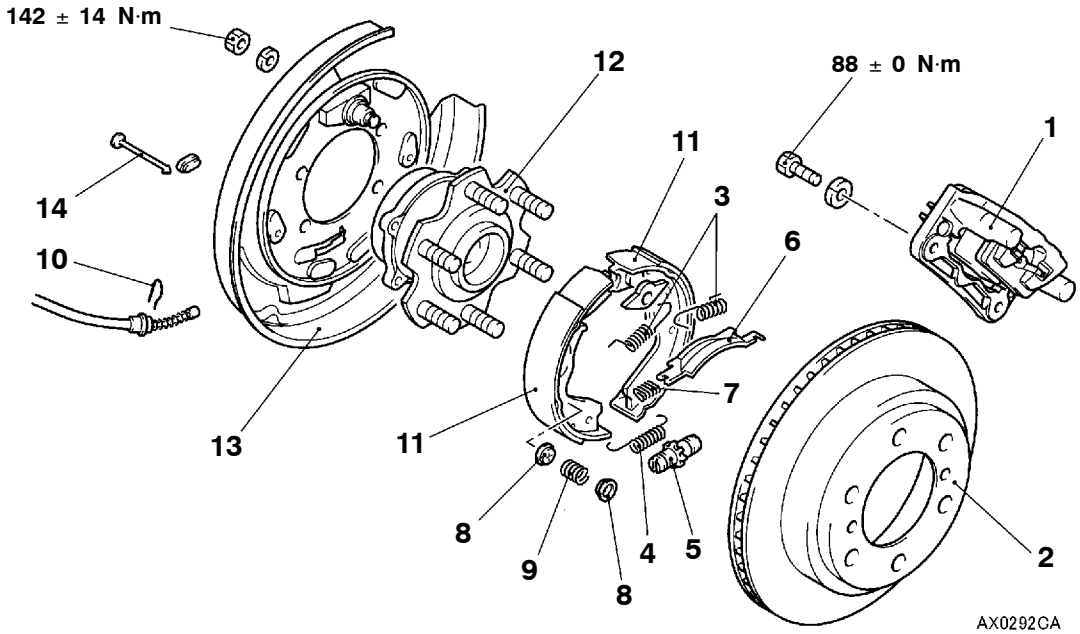


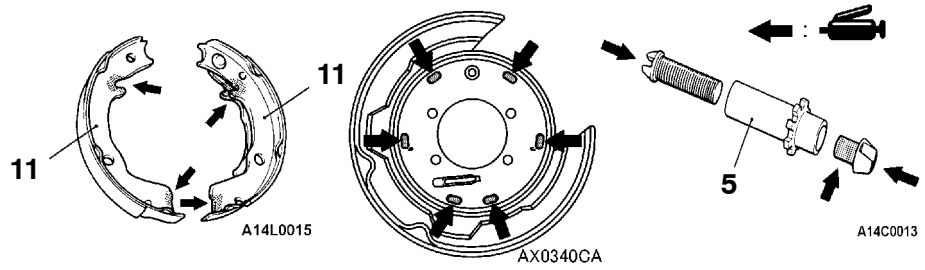


**Brake grease: Multipurpose grease**

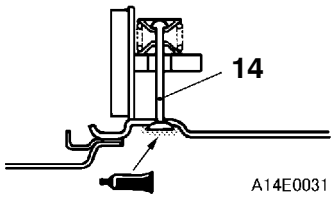


**Sealant:**
**3M ATD Part No. 8513 or equivalent**

**Removal steps**

◀A▶ 1. Rear brake caliper assembly
2. Rear brake disc
▶B◀ 3. Shoe-to-anchor spring
4. Adjusting wheel spring
▶A◀ 5. Adjuster assembly
6. Strut
7. Strut-to-shoe spring
8. Shoe hold-down cup
9. Shoe hold-down spring
10. Clip
11. Shoe and lining assembly
12. Rear hub assembly (Refer to GROUP 27.)
13. Backing plate
14. Shoe hold-down pin

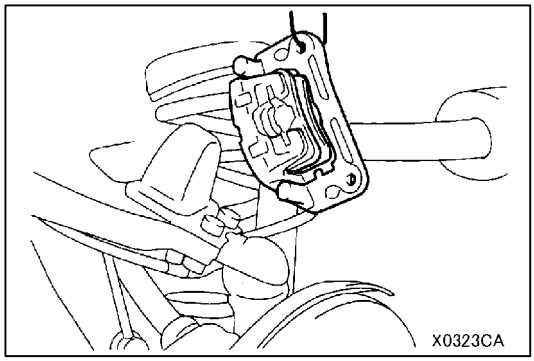


## REMOVAL SERVICE POINT

### ◀A▶ REAR BRAKE CALIPER ASSEMBLY REMOVAL

Remove the rear brake caliper assembly and support it with wire or similar.

Purchased from www.WorkshopManuals.co.uk

www.WorkshopManuals.co.uk

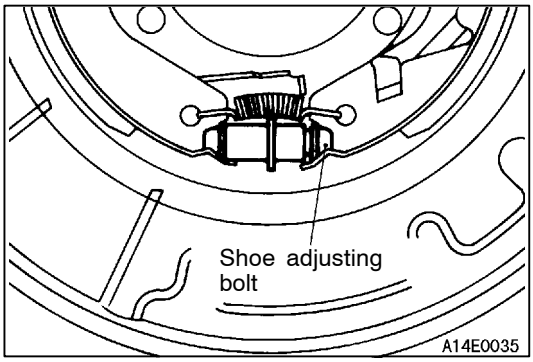


## INSTALLATION SERVICE POINTS

### ▶A◀ ADJUSTER ASSEMBLY INSTALLATION

Install the adjuster assembly so that the shoe adjusting bolt of left hand wheel is attached towards the rear of the vehicle, and the shoe adjusting bolt of right hand wheel is towards the front of the vehicle.

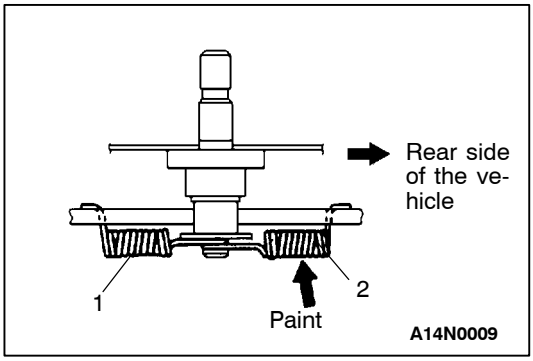


### ▶B◀ SHOE-TO-ANCHOR SPRING INSTALLATION

Install the shoe-to-anchor springs in the order shown in the illustration.

**Caution**
**The shoe-to-anchor springs are not interchangeable, so be careful that the spring with the paint mark is installed at the vehicle's rear side.**

NOTE
The figure shows the left wheel; for the right wheel, the position is symmetrical.

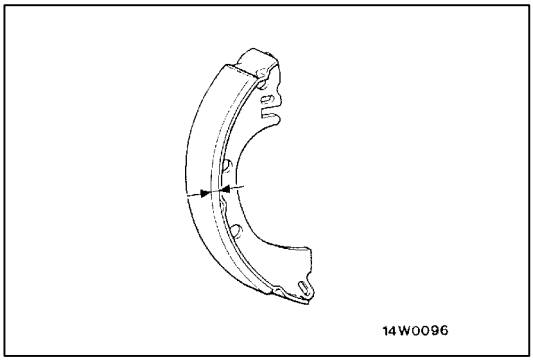


## INSPECTION

### BRAKE LINING AND BRAKE DRUM CHECK

1. Measure the thickness of the brake lining at several places.

   **Standard value: 3.0 mm**

   **Limit: 1.0 mm**

2. If the thickness of the brake lining has worn down to the limit value or more, replace the shoe and lining assemblies on both sides of the vehicle.

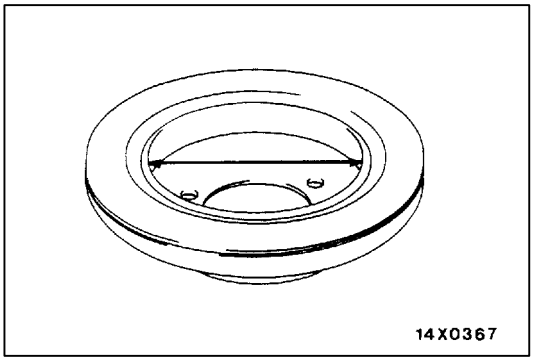


3. Measure the inside diameter of the brake disc in two places or more.

   **Standard value: 199.0 mm**

   **Limit: 200.0 mm**

4. If the inside of the brake disc has worn down to the limit value or more, or if it is excessively worn on one side, replace the brake disc.

Purchased from www.WorkshopManuals.co.uk

www.WorkshopManuals.co.uk

# STEERING

**Click on the applicable bookmark to selected the required model year.**

Purchased from www.WorkshopManuals.co.uk

www.WorkshopManuals.co.uk


# STEERING

## CONTENTS


**GENERAL INFORMATION . . . . . 2**

**SERVICE SPECIFICATIONS . . . . . 5**

**LUBRICANTS . . . . . 5**

**SEALANT AND ADHESIVE . . . . . 5**

**SPECIAL TOOLS . . . . . 6**

**ON-VEHICLE SERVICE . . . . . 8**

- Steering Wheel Free Play Check . . . . . 8
- Steering Angle Check . . . . . 8
- Tie Rod End Ball Joint Starting Torque Check . . 8
- Stationary Steering Effort Check . . . . . 9
- Steering Wheel Returnability Check . . . . . 9
- Oil Pump Belt Tension Check <6G7,4D5> . . . . . 9
- Power Steering Fluid Level Check . . . . . 10
- Power Steering Fluid Replacement . . . . . 10
- Power Steering System Bleeding . . . . . 10
- Oil Pump Pressure Test . . . . . 11
- Power Steering Oil Pressure Switch Check <6G7,4M4> . . . . . 12
- Ball Joint Dust Cover Check . . . . . 12

**STEERING WHEEL AND SHAFT* . . . . . 13**

**POWER STEERING GEAR BOX AND LINKAGE . . . . . 16**

**POWER STEERING OIL PUMP . . . . . 30**

**POWER STEERING OIL HOSES . . . . . 35**


**WARNINGS REGARDING SERVICING OF SUPPLEMENTAL RESTRAINT SYSTEM (SRS) EQUIPPED VEHICLES**

**WARNING!**

**(1) Improper service or maintenance of any component of the SRS, or any SRS-related component, can lead to personal injury or death to service personnel (from inadvertent firing of the air bag) or to the driver and passenger (from rendering the SRS inoperative).**

**(2) Service or maintenance of any SRS component or SRS-related component must be performed only at an authorized MITSUBISHI dealer.**

**(3) MITSUBISHI dealer personnel must thoroughly review this manual, and especially its GROUP 52B - Supplemental Restraint System (SRS) before beginning any service or maintenance of any component of the SRS or any SRS-related component.**

NOTE

The SRS includes the following components: SRS-ECU, SRS warning lamp, air bag module, clock spring and interconnecting wiring. Other SRS-related components (that may have to be removed/installed in connection with SRS service or maintenance) are indicated in the table of contents by an asterisk (*).

Purchased from www.WorkshopManuals.co.uk

www.WorkshopManuals.co.uk

# GENERAL INFORMATION

A 4-spoke type steering wheel has been mounted. All models have been equipped with the SRS as standard.
The power steering is an integral rack and pinion type that combines the steering gear and linkage into one light-weight and compact assembly.
The steering system uses a vane oil pump with a fluid flow control system, so that steering effort varies with engine speed.

| Item | | Specifications |
|---|---|---|
| Steering gear and linkage | Type | Integral type |
| | Gear type | Rack and pinion |
| Oil pump | Type | Vane type |
| | Displacement ml/rev. | 10.0 |
| | Relief set pressure MPa | 8.8 |

## CONSTRUCTION DIAGRAM

**<L.H. drive vehicles–6G7, 4M4>**

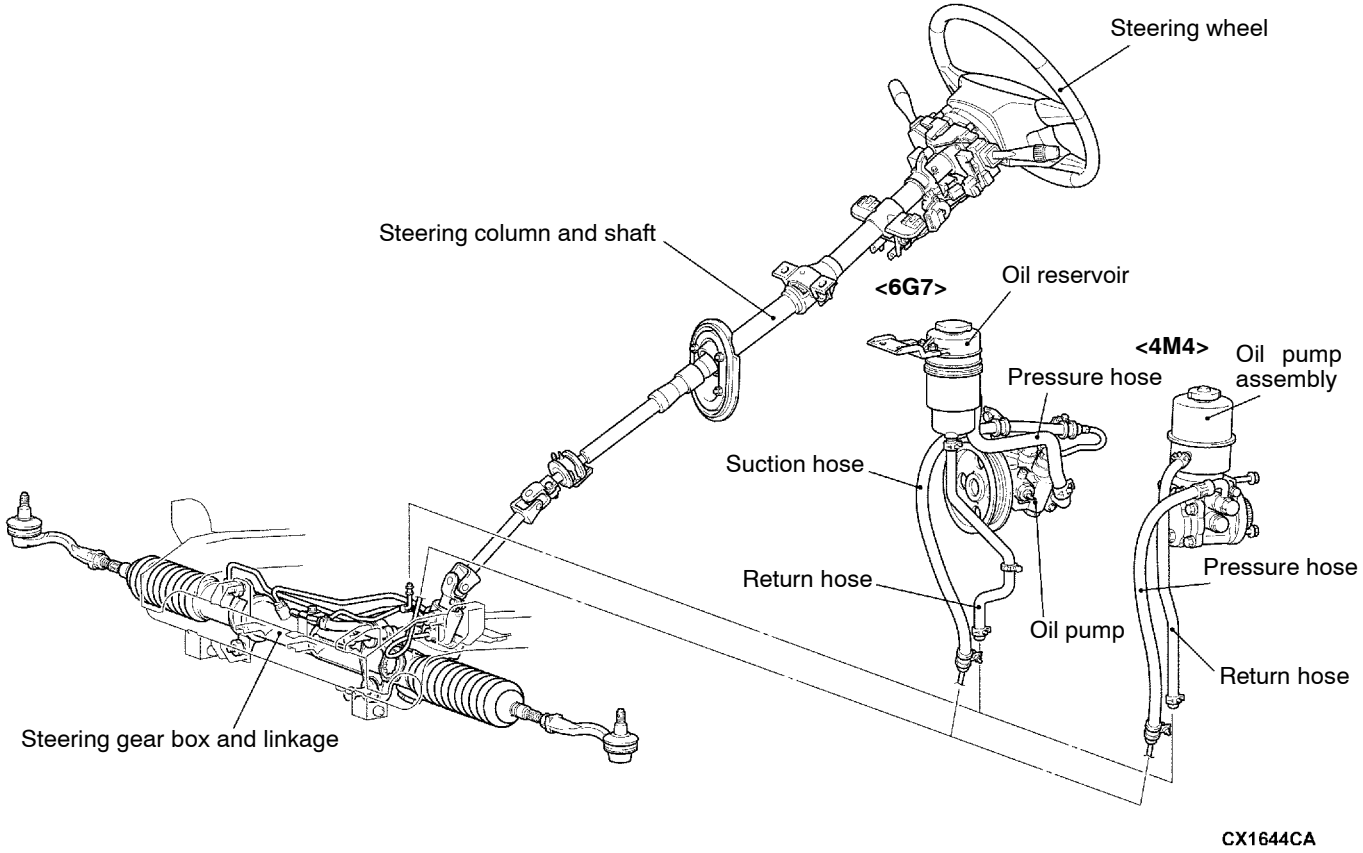


Purchased from www.WorkshopManuals.co.uk

www.WorkshopManuals.co.uk

**<L.H. drive vehicles–4D5>**

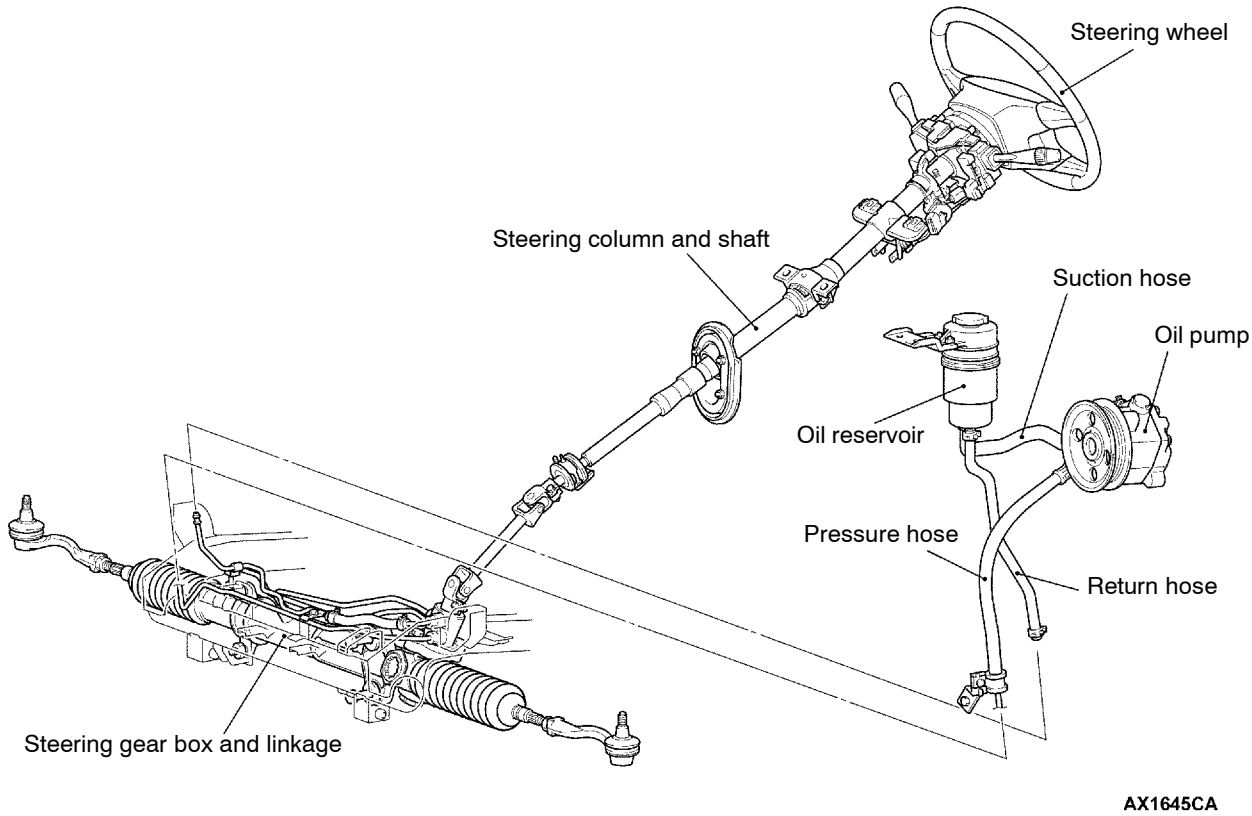


**<R.H. drive vehicles–6G7, 4M4>**

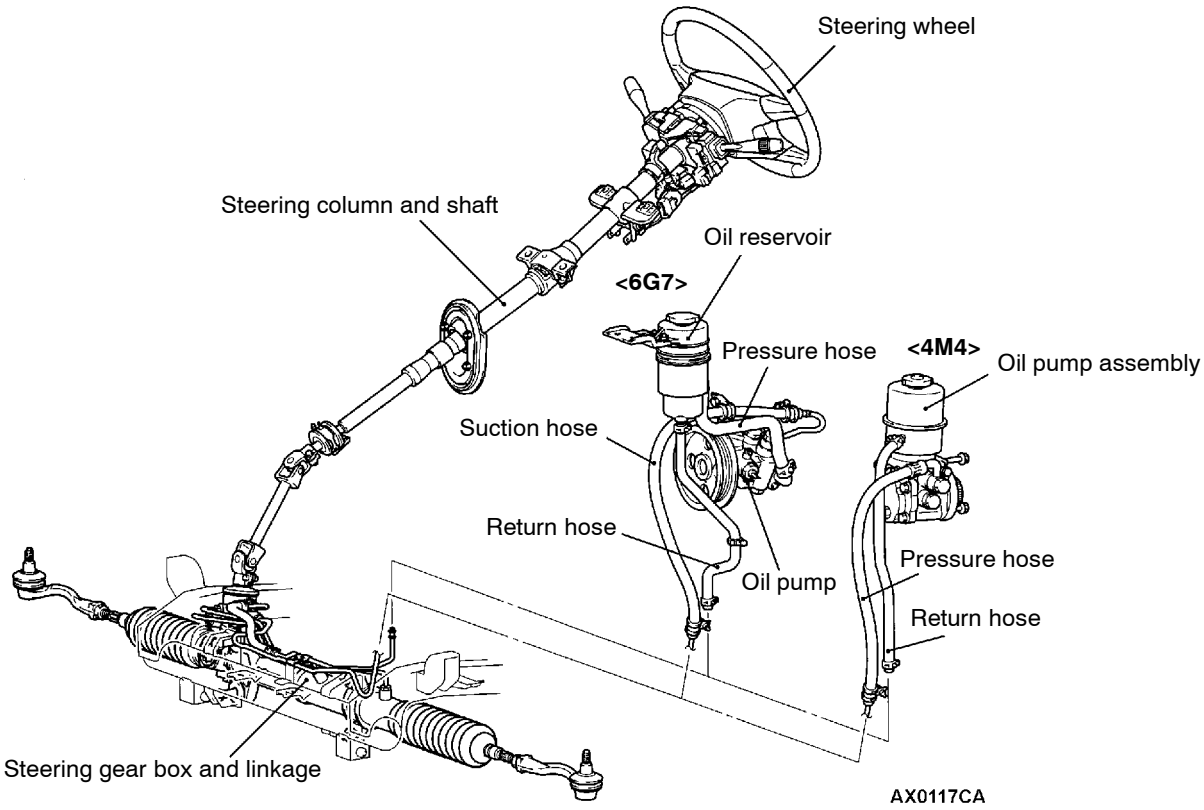


Purchased from www.WorkshopManuals.co.uk

www.WorkshopManuals.co.uk

**<R.H. drive vehicles–4D5>**

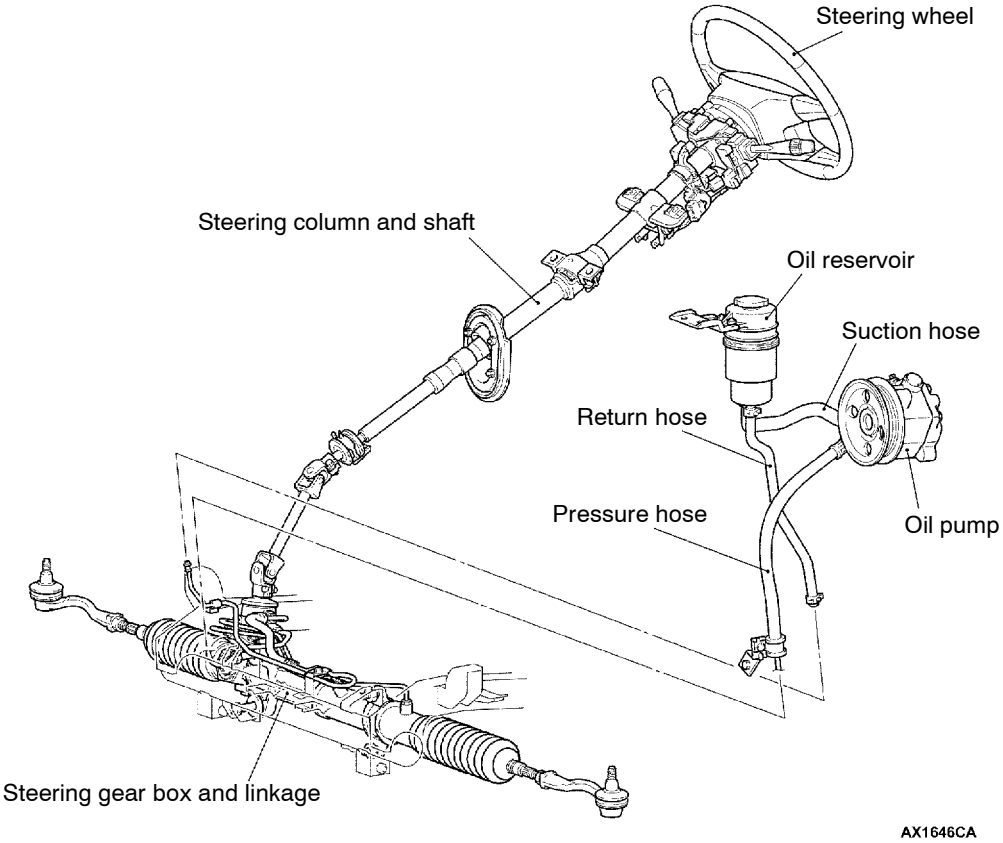


Purchased from www.WorkshopManuals.co.uk

www.WorkshopManuals.co.uk

# SERVICE SPECIFICATIONS

| Item | | Standard value | Limit |
|---|---|---|---|
| Steering wheel free play mm | with engine running | - | 30 or less |
| | with engine stopped | 0 – 10 | - |
| Steering angle | Inner wheel | 36°30' ± 1°30' | - |
| | Outer wheel <For reference> | 31°40' | - |
| Ball joint turning torque N·m | | 0.49 - 2.45 | - |
| Stationary steering effort N | Steering effort | 39.2 or less | - |
| | Fluctuation allowance | 5.9 or less | - |
| Oil pump relief pressure MPa | | 8.3 - 9.0 | - |
| Pressure under no-load condition MPa | <6G7, 4D5> | 0.34 | - |
| | <4M4> | 0.29 | - |
| Steering gear retention hydraulic pressure MPa | | 8.3 - 9.0 | - |
| Oil pressure switch operating pressure MPa <6G7, 4M4> | OFF→ON | 1.5 - 2.0 | - |
| | ON→OFF | 1.5 - 2.0 | - |
| Pinion total rotation torque N·m | Total rotation torque | 0.6 - 1.7 | - |
| | Torque variation | 0.4 or less | - |
| Tie rod joint swing resistance N (Tie rod joint swing torque N·m) | | 11 - 35 (1.4 - 4.9) | - |
| Special tool aperture dimension (MB991561) mm | | 2.9 | - |
| Band crimped width mm | | 2.4 - 2.8 | - |

# LUBRICANTS

| Item | Specified lubricant | Quantity |
|---|---|---|
| Power steering | Automatic transmission fluid DEXRON II | About 0.6 l |
| Tie rod bellows | Silicone grease | As required |
| Pinion and valve assembly | Repair kit grease | As required |
| Rack assembly | Repair kit grease | As required |

# SEALANT AND ADHESIVE

| Item | Specified sealant | Remarks |
|---|---|---|
| Rack support cover end plug | 3M ATD Part No. 8663 or equivalent | Semi-drying sealant |

Purchased from www.WorkshopManuals.co.uk

www.WorkshopManuals.co.uk

# SPECIAL TOOLS

| Tool | Number | Name | Use |
|---|---|---|---|
| 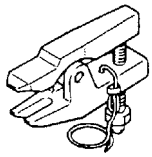 B991113 | MB990635, MB991113 or MB991406 | Steering linkage puller | Tie rod end disconnection |
| 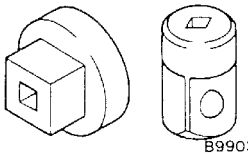 B990326 | MB990326 | Preload socket | Ball joint turning torque measurement |
| 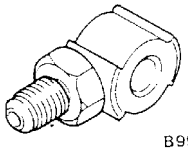 B990993 | MB991548 | Power steering oil pressure gauge adapter (pump side) | Oil pressure measurement |
| 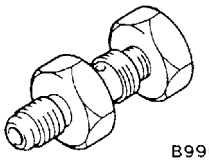 B990994 | MB991549 | Power steering oil pressure gauge adapter (hose side) | |
| 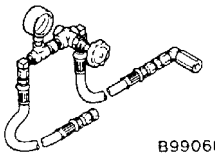 B990662 | MB990662 | Oil pressure gauge assembly | |
| 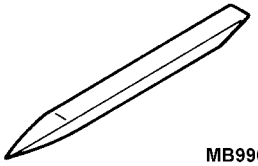 MB990784 | MB990784 | Ornament remover | Steering wheel cover removal |
| 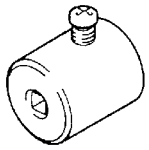 B991006 | MB991006 | Preload socket | Total pinion torque measurement |
| 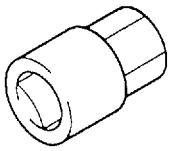 B991204 | MB991204 | Torque wrench socket | • Rack support cover removal<br>• Total pinion torque adjustment |
| 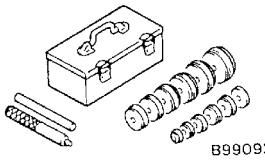 B990925 | MB990925 | Bearing and oil seal installer set | Oil seal and bearing press fitting (Refer to GROUP 26 - Special Tools.) |

Purchased from www.WorkshopManuals.co.uk

www.WorkshopManuals.co.uk

| Tool | Number | Name | Use |
|---|---|---|---|
| 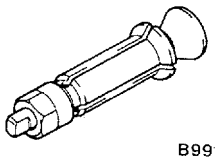 B991120 | MB991120 | Needle bearing puller | Valve housing needle bearing pressing-out |
| 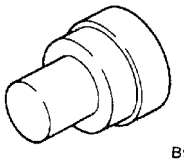 B991198 | MB991199 | Oil seal installer | Gear housing oil seal press fitting |
| 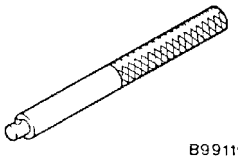 B991197 | MB991197 | Bar (long type) | |
| 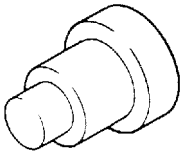 B991202 | MB991202 | Oil seal and bearing installer | Valve housing needle bearing and lower bearing press fitting |
| 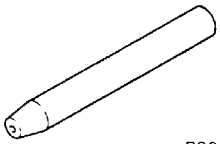 B991212 | MB991213 | Oil seal protector | Rack assembly installation |
| 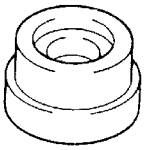 B991203 | MB991203 | Oil seal and bearing installer | Valve housing oil seal and bearing press fitting |
| 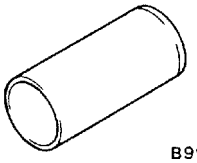 B991317 | MB991317 | Seal ring installer | Pinion seal ring compression |
| 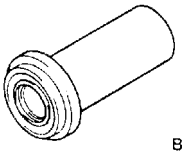 B990941 | MB990941 | Torque tube bearing installer | Valve housing lower oil seal press fitting |
| 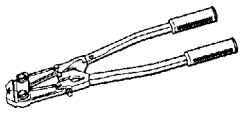 | MB991561 | Boot band crimping tool | Bellows band installation |

Purchased from www.WorkshopManuals.co.uk

www.WorkshopManuals.co.uk

# ON-VEHICLE SERVICE

## STEERING WHEEL FREE PLAY CHECK

1. With the engine running (hydraulic pressure operating), put the front wheels in straight-ahead position.
2. Lightly turn the steering wheel left and right to measure circumferential play on the steering wheel before the wheels start to move.

   **Limit: 30 mm or less**

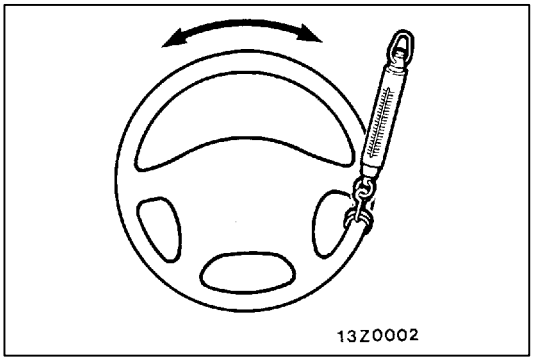


3. When the play exceeds the limit, check steering shaft connections and steering linkage for looseness. Repair or replace if necessary.
4. If the play still exceeds the limit, put the steering wheel in straight-ahead position with the engine stopped. Then, load 5 N in the circumferential direction on the steering wheel and measure circumferential play.

   **Standard value: 0 – 10 mm**
5. In case the play exceeds the standard value again, remove the steering gear box and linkage. Then, check and adjust total pinion torque. (Refer to P.37A-19.)

## STEERING ANGLE CHECK

1. Put the front wheels on a turning radius gauge and measure steering angle.

   **Standard value:**

| | |
|---|---|
| Inner wheels | 36°30’ ± 1°30’ |
| Outer wheels <For reference> | 31°40’ |

2. If the standard values are not met, toe-in is probably incorrect. Adjust the toe-in, seeing GROUP 33A - On-vehicle Service, and recheck the steering angle.

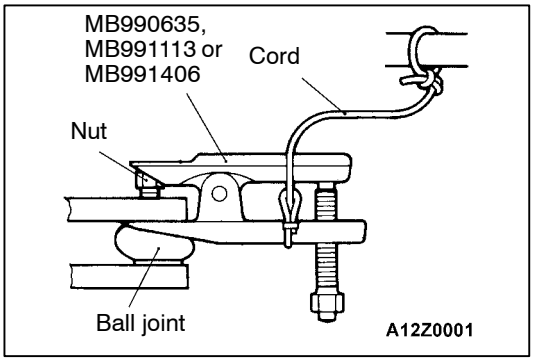


## TIE ROD END BALL JOINT STARTING TORQUE CHECK

1. Use the special tool to disconnect the tie rod and knuckle.

   **Caution**
   **(1) In order not to damage the ball joint thread, the tie rod end mounting nut must be only loosened but not removed from the ball joint. Also, be sure to use the special tool.**
   **(2) Tie the special tool with a cord so as not to fall off.**

Purchased from www.WorkshopManuals.co.uk

www.WorkshopManuals.co.uk

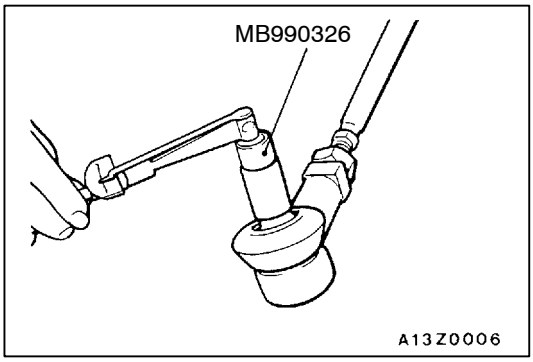


2. After swinging the ball joint stud several times, install the nut on the stud. Then, measure ball joint turning torque with the special tool.

   **Standard value: 0.49 – 2.45 N·m**

3. When the torque is over the standard value, replace the tie rod end.
4. When the torque is below the standard value, check the ball joint for looseness or ratcheting. If none of these found, the ball joint is still serviceable.

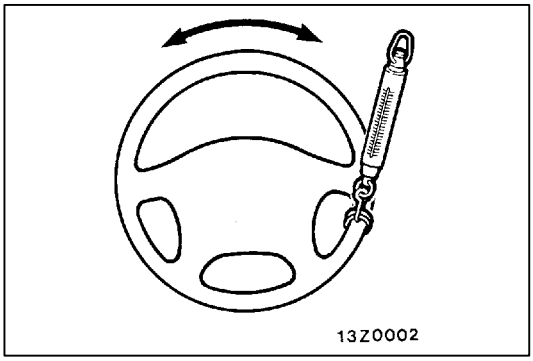


## STATIONARY STEERING EFFORT CHECK

1. With the vehicle stopped on a flat, paved surface, put the steering wheel in straight-ahead position.
2. Start the engine and keep it at 1,000±100 r/min.
3. Attach a spring balance to the steering wheel outer bar. Measure steering effort required to turn the steering wheel from the straight-ahead position to the left and right (within a range of 1.5 turns). Also see that no significant fluctuation is present in the steering effort.

   **Standard value:**

| | |
|---|---|
| Steering effort | 39.2 N or less |
| Fluctuation | 5.9 N or less |

4. If the standard values are not met, check and adjust the related parts.

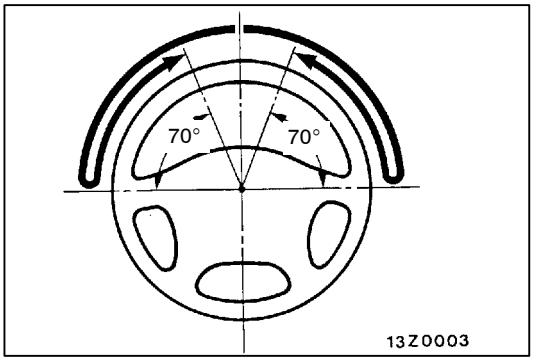


## STEERING WHEEL RETURNABILITY CHECK

Check returnability as follows on road test:

1. Make both gradual and sudden turns and see by your own feeling that the steering effort and returnability have no difference between the left and right turns.
2. At a speed of about 35 km/h, turn the steering wheel 90°, keep it there for 1 to 2 seconds and release. When the steering wheel returns more than 70°, it has a good returnability.

   NOTE
   You may have momentary increase in effort when turning the steering wheel quickly, which is normal. This happens due to insufficient job of the oil pump when the engine is running at low speed such as idling.

## OIL PUMP BELT TENSION CHECK <6G7, 4D5>

Refer to GROUP 11A/11B - On-vehicle Service.

Purchased from www.WorkshopManuals.co.uk

www.WorkshopManuals.co.uk

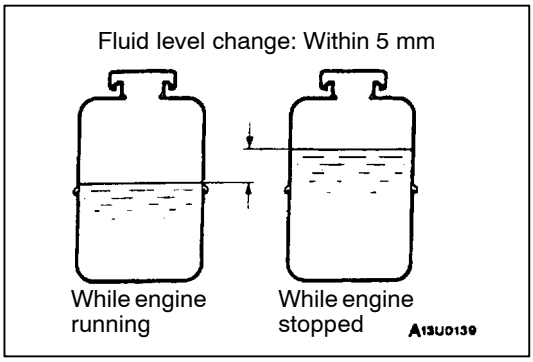


## POWER STEERING FLUID LEVEL CHECK

1. Park the vehicle on a flat, level surface and start the engine. Without the vehicle moving, turn the steering wheel several times until the fluid reaches 50 to 60°C.
2. With the engine running, turn the wheel fully left and right several times.
3. Check the fluid in the oil reservoir for foaming or milkiness.
4. Check difference in fluid level between the engine stopped and running. If the difference is 5 mm or more, bleed air.

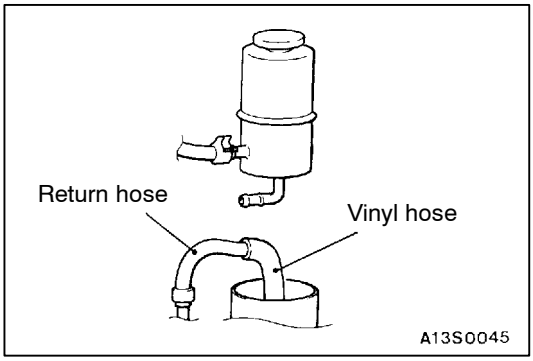


## POWER STEERING FLUID REPLACEMENT

1. Jack up the vehicle and support the front wheels with rigid racks.
2. Disconnect the return hose.
3. Connect a vinyl hose to the return hose and drain fluid into a container.
4. Disconnect the ignition coil connectors. (Refer to GROUP16 – Ignition System.)
5. Cranking the engine several times intermittently with the starter, turn the steering wheel fully left and right to drain the fluid.
6. Connect the return hose and secure it with the clip.
7. Fill the oil reservoir with specified fluid up to between “MAX” and “MIN” marks, and then bleed air.

   **Specified fluid:**
   **Automatic transmission fluid DEXRON II**

   **Caution**
   **Do not use ATF-SP II M and ATF-SP III.**

## POWER STEERING SYSTEM BLEEDING

1. Jack up the vehicle and support the front wheels with rigid racks.
2. Disconnect the ignition coil connectors. Cranking the engine with the starter several times intermittently (during 15 to 20 seconds), turn the steering wheel left and right fully five or six times.

   **Caution**
   **(1) During the bleeding, refill the fluid so that the level is always above “MIN” mark on the oil reservoir.**
   **(2) Be sure to bleed air only while cranking. If the bleeding is done with the engine running, the air will be broken up and absorbed into the fluid.**

3. Connect the ignition coil connectors and idle the engine.
4. Turn the steering wheel left and right fully until no bubbles comes out in the oil reservoir.
5. See that the fluid is not milky and that the fluid level is between “MAX” and “MIN” marks.
6. See that the fluid level changes little when the steering wheel is turned left and right.
7. Check difference in fluid levels between the engine stopped and running.

Purchased from www.WorkshopManuals.co.uk

www.WorkshopManuals.co.uk

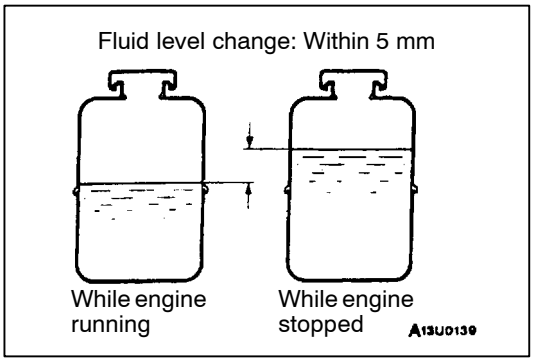


8. If the level changes more than 5 mm, the air is badly bled. So, bleed air again.

   **Caution**
   **(1) If the fluid level rises suddenly after the engine is stopped, the bleeding is incomplete.**
   **(2) Incomplete bleeding causes abnormal noises from the pump and the flow-control valve. This could lessen the life of the pump and the other parts.**

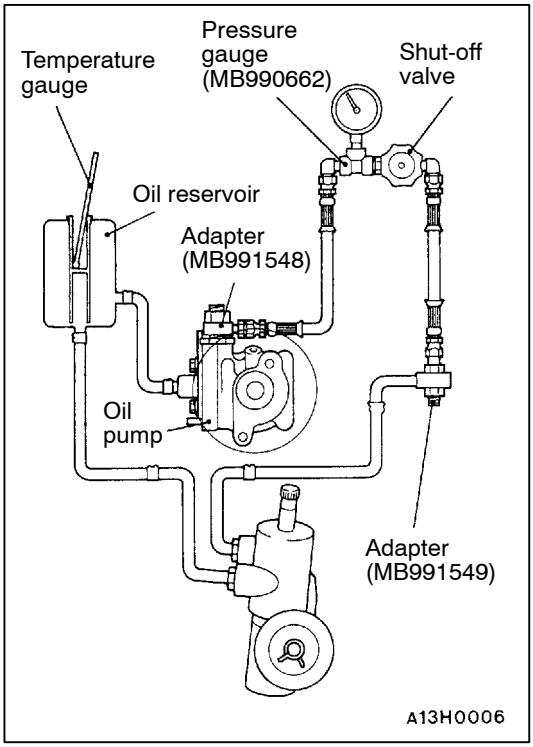


## OIL PUMP PRESSURE TEST

1. Disconnect the pressure hose from the oil pump, and then connect the special tools.
2. Bleed air. Without the vehicle moving, turn the steering wheel several times to raise the fluid temperature to 50 to 60°C.
3. Start the engine and idle at 1,000±100 r/min.
4. Fully close the shut-off valve of the pressure gauge and measure the oil pump relief pressure.

   **Standard value: 8.3 - 9.0 MPa**

5. If the standard value is not met, disassemble and assemble the oil pump again. Then, remeasure oil pressure.
6. With the pressure gauge shut-off valve fully open, check the hydraulic pressure in unladen condition.

   **Standard value:**
   **<6G7,4D5> 0.34 MPa**
   **<4M4> 0.29 MPa**

7. If the standard value is not met, the oil line or steering gear is probably defective. So, repair and measure oil pressure again.
8. Turn the steering wheel fully either left or right and check the retention hydraulic pressure.

   **Standard value: 8.3 - 9.0 MPa**

9. If the pressure is below the standard value, disassemble and reassemble the steering gear. If above, disassemble and reassemble the components of the oil pump flow control valve. Then, measure oil pressure again.
10. Remove the special tools, and tighten the pressure hose to the specified torque.

    **Tightening torque: 57 ± 7 N·m**

11. Bleed the system.

Purchased from www.WorkshopManuals.co.uk

www.WorkshopManuals.co.uk

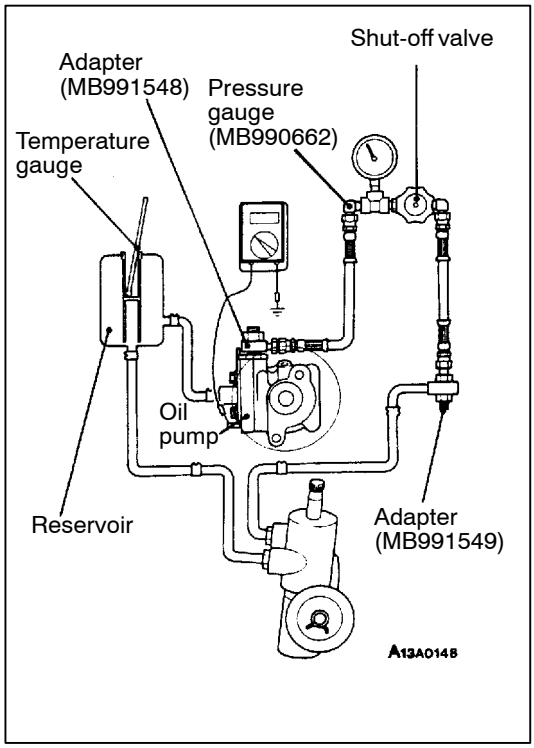


## POWER STEERING OIL PRESSURE SWITCH CHECK <6G7, 4M4>

1. Disconnect the pressure hose from the oil pump and connect the special tools.
2. Bleed air. Without the vehicle moving, turn the steering wheel several times to raise the fluid temperature to 50 to 60°C.
3. Idle the engine.
4. Disconnect the oil pressure switch connector and set an ohmmeter in position.
5. Gradually close the shut-off valve in the pressure gauge to increase hydraulic pressure. Check that the hydraulic pressure activating the switch meets the standard value.

   **Standard value: 1.5 - 2.0 MPa**
6. Gradually open the shut-off valve and reduce the hydraulic pressure. Check that the hydraulic pressure deactivating the switch meets the standard value.

   **Standard value: 1.5 - 2.0 MPa**
7. Remove the special tools and tighten the pressure hose to the specified torque.

   **Tightening torque: 57 ± 7 N·m**
8. Bleed the system.

## BALL JOINT DUST COVER CHECK

1. Check the dust cover for cracks or damage by pushing it with finger.
2. If the dust cover is cracked or damaged, replace the tie rod end.

   NOTE
   A cracked or damaged dust cover may damage the ball joint.

Purchased from www.WorkshopManuals.co.uk

www.WorkshopManuals.co.uk

# STEERING WHEEL AND SHAFT

## REMOVAL AND INSTALLATION

**Caution:**

**Before removing the air bag module and clock spring, refer to GROUP 52B – Service Precautions and Air Bag Module and Clock Spring.**

**Pre-removal Operation**
- Air Cleaner, Resonance Hose and Air Intake Duct Removal (Refer to GROUP 15.)
- Instrument Under Cover Removal (Refer to GROUP 52A.)

**Post-installation Operation**
- Instrument Under Cover Installation (Refer to GROUP 52A.)
- Air Cleaner, Resonance Hose and Air Intake Duct Installation (Refer to GROUP 15.)
- Checking Steering Wheel Position with Wheels Straight Ahead

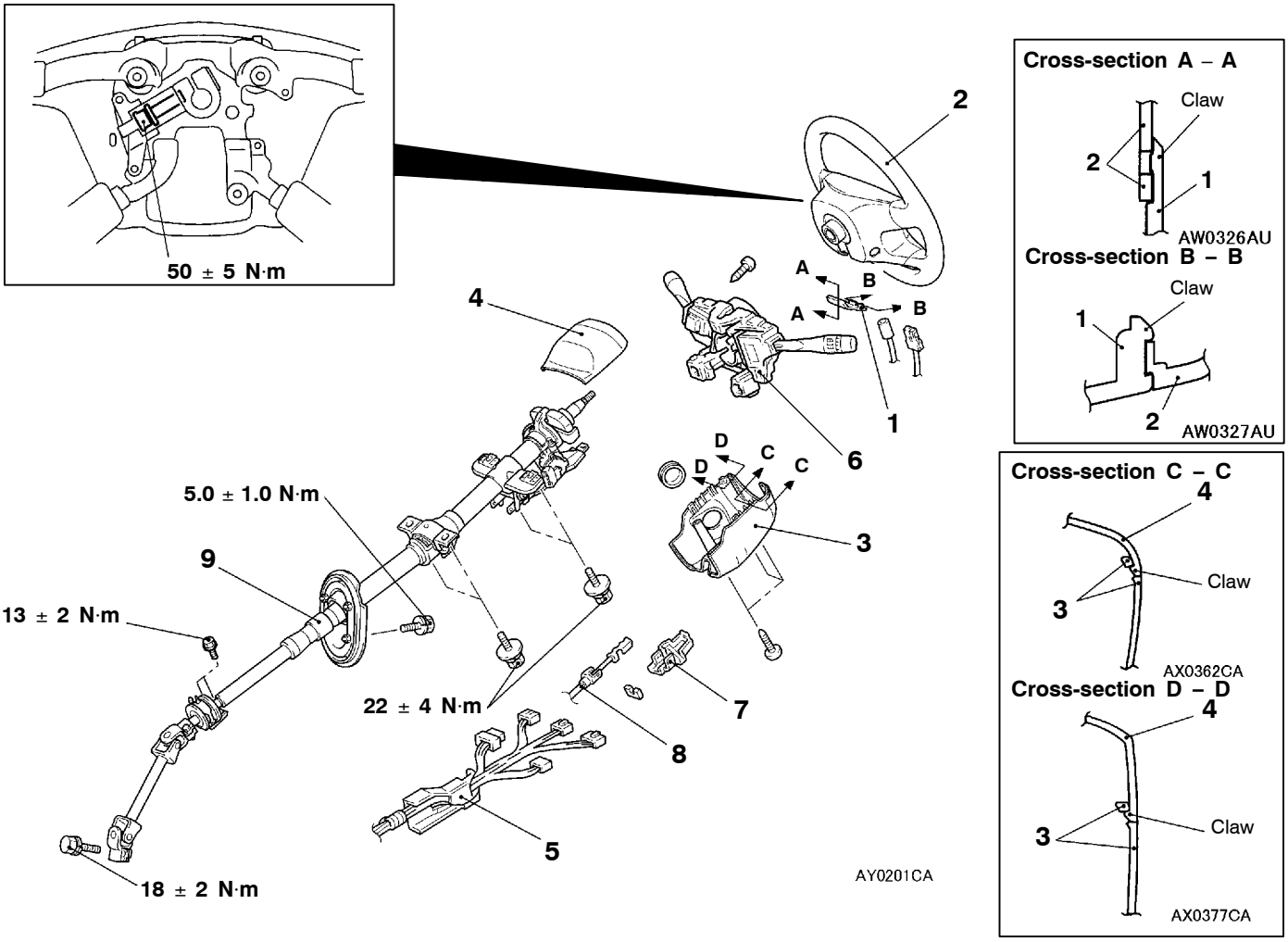


**Removal steps**

◀A▶
◀B▶

1. Cover
2. Steering wheel and air bag module assembly
3. Lower column cover
4. Upper column cover
5. Protector
6. Clock spring and column switch assembly <Refer to GROUP 52B.>
7. Cover <A/T>
8. Key interlock cable <A/T>
   - Brake pedal return spring <Refer to GROUP 35A – Brake Pedal.>
9. Steering column shaft assembly

NOTE
When the air bag module assembly must be removed, refer to GROUP 52B – Air Bag Modules and Clock Spring.

Purchased from www.WorkshopManuals.co.uk

www.WorkshopManuals.co.uk

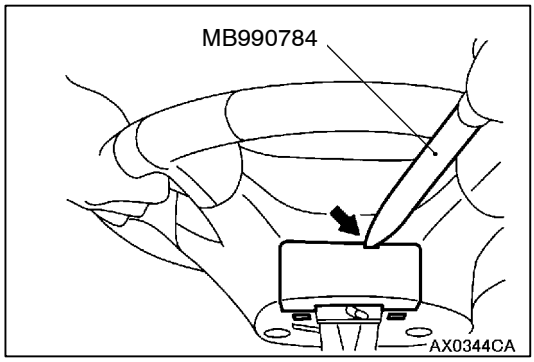


## REMOVAL SERVICE POINTS

### ◀A▶ COVER REMOVAL

Insert the special tool from the indicated position to remove the cover.

NOTE
The special tool can be inserted through the notch behind the position shown.

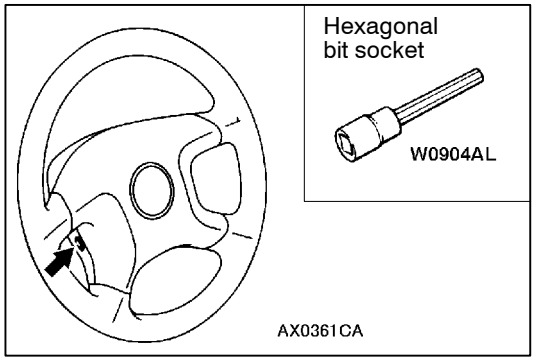


### ◀B▶ STEERING WHEEL AND AIRBAG MODULE ASSEMBLY REMOVAL

1. Disconnect the connectors of the air bag module and the horn switch through a hole made after the removal of the cover.
2. Loosen the bolt completely. Then, remove the steering wheel and airbag module assembly.

NOTE
Use a hexagonal bit socket or a hexagonal wrench having an effective length of 75 mm or more in the hexagonal section and the diameter of 8 mm or more.

Purchased from www.WorkshopManuals.co.uk

www.WorkshopManuals.co.uk

## DISASSEMBLY AND REASSEMBLY

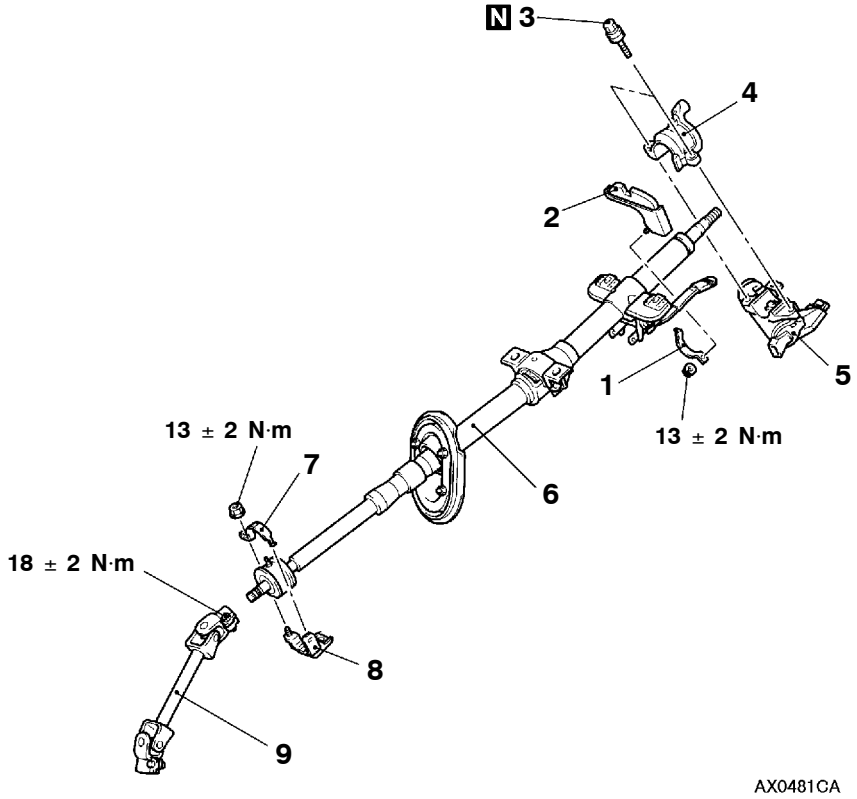


**Disassembly steps**

1. Steering dynamic damper lower plate
2. Steering dynamic damper
3. ◀A▶ ▶A◀ Special bolt
4. ▶A◀ Steering lock bracket
5. ▶A◀ Steering lock cylinder assembly
6. Steering column shaft
7. Shaft support bracket B
8. Shaft support bracket A
9. Joint assembly

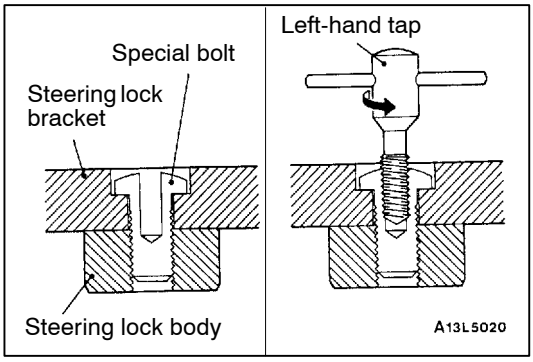


## DISASSEMBLY SERVICE POINT

### ◀A▶ SPECIAL BOLT REMOVAL

1. In the special bolt, drill a hole deep enough for the tap to stand.
2. Using a left-hand tap, remove the special bolt.

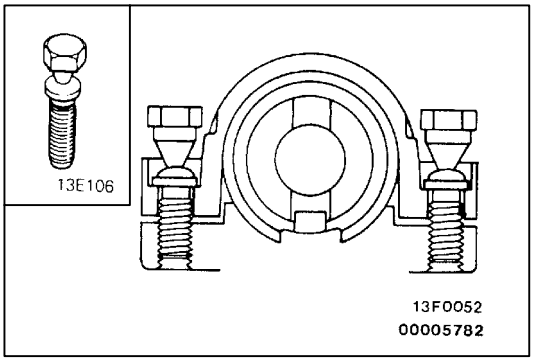


## REASSEMBLY SERVICE POINT

### ▶A◀ STEERING LOCK CYLINDER ASSEMBLY/ STEERING LOCK BRACKET/SPECIAL BOLT INSTALLATION

1. When installing the steering lock cylinder assembly and steering lock bracket to the steering column assembly, temporarily install the steering lock in alignment with the column boss.
2. Check that the steering lock works properly. Then, tighten the special bolts until the heads twists off.

Purchased from www.WorkshopManuals.co.uk

www.WorkshopManuals.co.uk

# POWER STEERING GEAR BOX AND LINKAGE

## REMOVAL AND INSTALLATION

**Caution: SRS**
**On vehicles with SRS, before removing steering gear box, refer to GROUP 52B. Also, put the front wheels in straight-ahead position and remove the ignition key. Failure to do so may damage the SRS clock spring and render the SRS air bag inoperative, which results serious driver injury.**

**Pre-removal Operation**
Power Steering Fluid Draining (Refer to P.37A-10.)

**Post-installation Operation**
- Power Steering Fluid Supplying and bleeding (Refer to P.37A-10.)
- Check the Dust Cover for Cracks or Damage by Pushing it with Finger.
- Checking Steering Wheel Position with Wheels Straight Ahead

**<L.H. drive vehicles>**

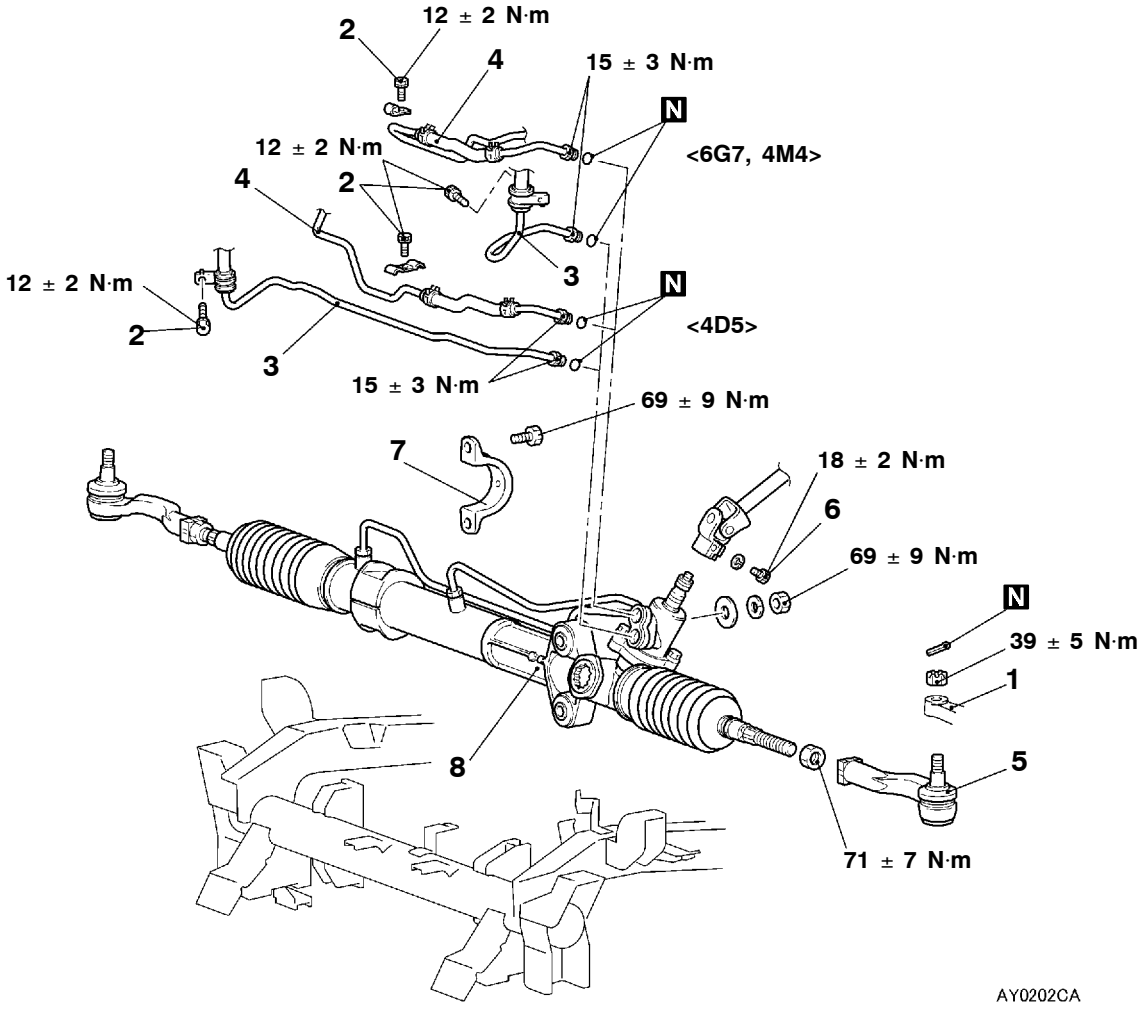


**Removal steps**
- Under cover removal

◀A▶ 1. Tie rod end and knuckle connection
2. Bolt
▶B◀ 3. Pressure hose assembly
▶B◀ 4. Return tube
◀B▶ ▶A◀ 5. Tie rod end (LH)
- Differential mount bracket assembly (LH) separation

6. Steering gear and joint connecting bolt
7. Gear box clamp
◀C▶ 8. Steering gear and linkage

Purchased from www.WorkshopManuals.co.uk

www.WorkshopManuals.co.uk

<R.H. drive vehicles>

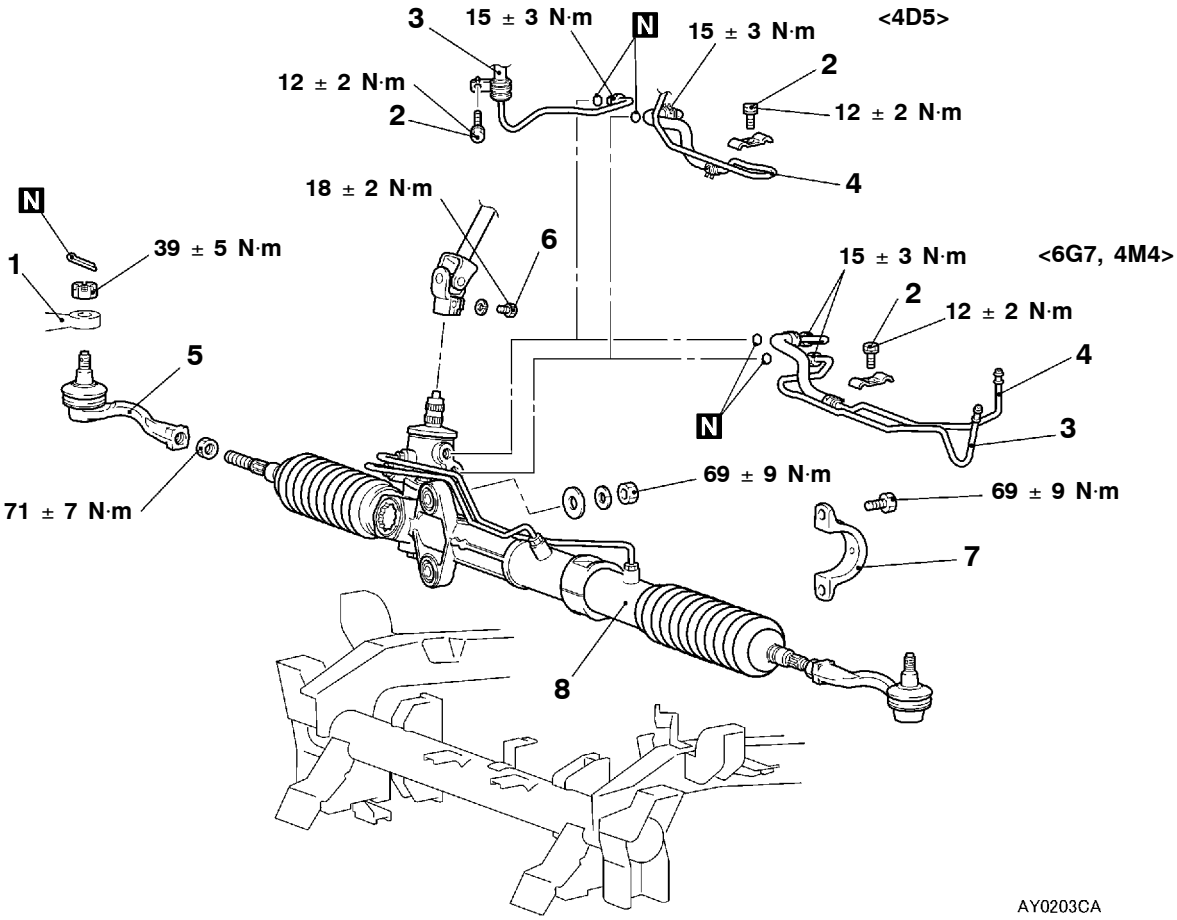


**Removal steps**

- Under cover removal

◀A▶ 1. Tie rod end and knuckle connection
2. Bolt
▶B◀ 3. Pressure hose assembly
▶B◀ 4. Return tube
▶A◀ 5. Tie rod end (RH)
- Differential mount bracket assembly (RH) separation

◀B▶ 6. Steering gear and joint connecting bolt
7. Gear box clamp
◀C▶ 8. Steering gear and linkage

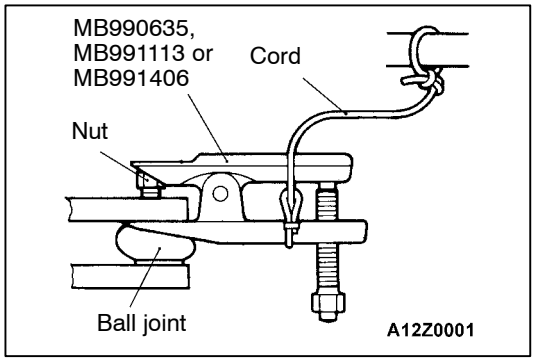


## REMOVAL SERVICE POINTS

### ◀A▶ TIE ROD END AND KNUCKLE DISCONNECTION

**Caution**

1. **In order not to damage the ball joint thread, the tie rod end mounting nut must be only loosened but not removed from the ball joint. Be sure to use the special tool.**
2. **Tie the special tool with a cord so as not to fall off.**

Purchased from www.WorkshopManuals.co.uk

www.WorkshopManuals.co.uk

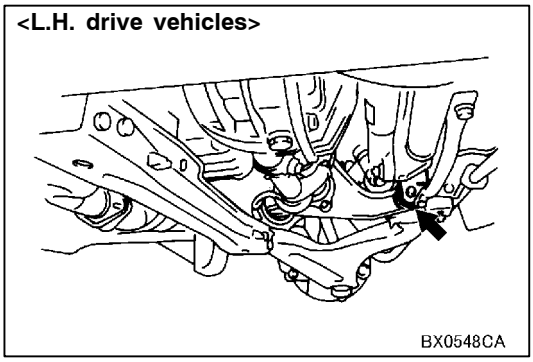


### ◀B▶ DIFFERENTIAL MOUNT BRACKET ASSEMBLY SEPARATION

1. Remove the bolts securing the differential mount bracket assembly (LH) to the front frame assembly <L.H. drive vehicles>.

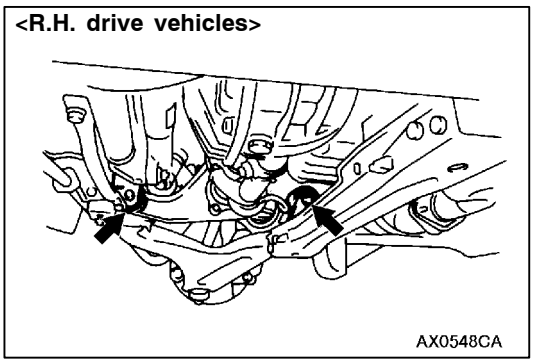


2. Remove the bolts securing the differential mount bracket assembly (RH) to the front frame assembly and the bolts securing the differential mount bracket assembly (RH) to the No.2 crossmember <R.H. drive vehicles>.

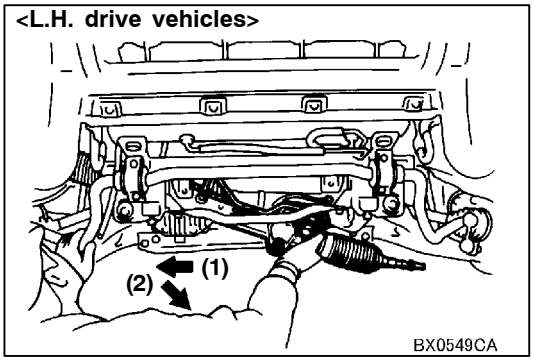


### ◀C▶ STEERING GEAR AND LINKAGE REMOVAL

1. Pull the rack to the right as far as it will go, and lower the steering gear and linkage through the space of the front frame by manipulating it <L.H. drive vehicles>.

   **Caution**
   **Be careful not to damage the boot when removing the steering gear and linkage.**

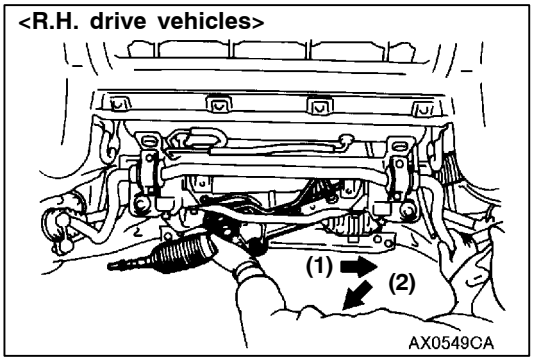


2. Pull the rack to the left as far as it will go, and lower the steering gear and linkage through the space of the front frame by manipulating it <R.H. drive vehicles>.

   **Caution**
   **Be careful not to damage the boot when removing the steering gear and linkage.**

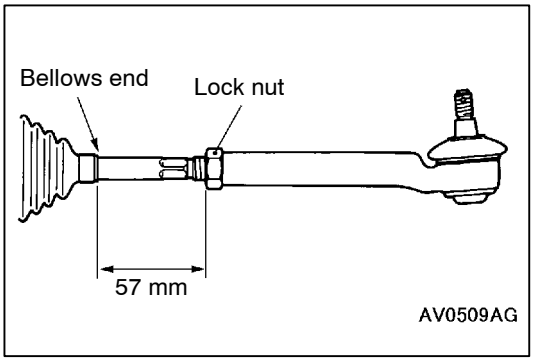


## INSTALLATION SERVICE POINTS

### ▶A◀ TIE ROD END INSTALLATION

Screw in the tie-rod end by the amount shown in the illustration, and then provisionally tighten it with the lock nut.

NOTE
Install the steering gear and linkage to the vehicle body, and adjust the toe-in before tightening the lock nut to the specified torque.

Purchased from www.WorkshopManuals.co.uk

www.WorkshopManuals.co.uk

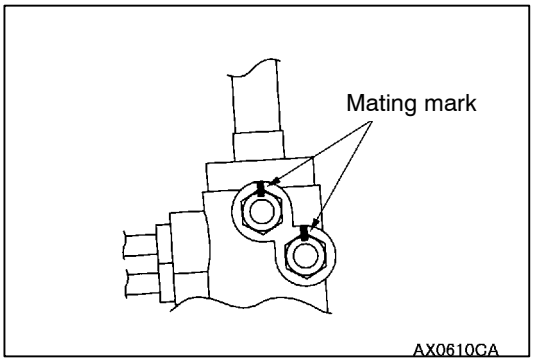


**▶B◀ RETURN TUBE/PRESSURE HOSE ASSEMBLY INSTALLATION**

Align the markings on the gearbox side and the tube side.

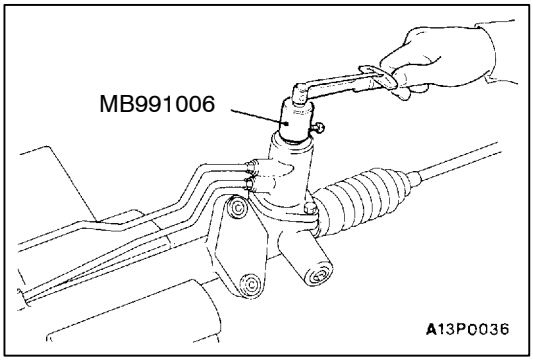


## INSPECTION

### GEAR BOX PINION TOTAL ROTATION TORQUE CHECK

1. Using the special tool, turn the pinion gear at a speed of one rotation per 4 to 6 seconds to measure total rotation torque.

   **Standard values:**
   **Total rotation torque: 0.6 – 1.7 N·m**
   **Torque fluctuation: 0.4 N·m or less**

   NOTE
   (1) Remove the bellows from the rack housing before measuring.
   (2) Measure the total rotation torque by turning the special tool left and right 180° from the neutral position.

2. If the standard values are not met, adjust the pinion total rotation torque. (Refer to P.37-27.)
3. In case the adjustment is impossible, disassemble and check the components, and repair if necessary.

   **Caution**
   **Secure the steering gear box and linkage in their mounting positions only. Otherwise, deformation or damage could result.**

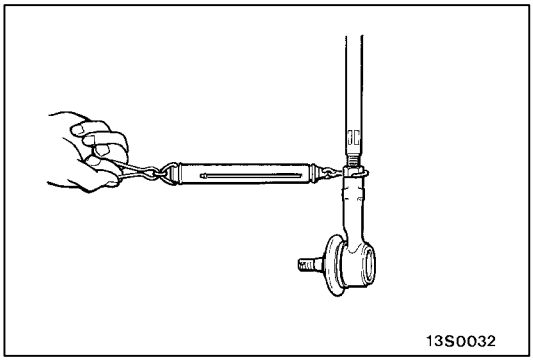


### TIE ROD SWING RESISTANCE CHECK

1. Swing the tie rod 10 times hardly.
2. With the tie rod end downwards as shown, use a spring scale to measure swing resistance (swing torque).

   **Standard value: 11 - 35 N (1.4 - 4.9 N·m)**

3. If the measured value is above the standard value, replace the tie rod.
4. If below, check the ball joint for looseness or ratcheting. The tie rod is still serviceable when the ball joint swings smoothly.

### TIE ROD END BALL JOINT DUST COVER CHECK

1. Check the dust cover for cracks or damage by pushing it with finger.
2. If the dust cover is cracked or damaged, replace the tie rod end. (Refer to P.37A-20, 21.)

   NOTE
   A cracked or damaged dust cover may damage the ball joint. Replace the dust cover when it is damaged during service work.

Purchased from www.WorkshopManuals.co.uk

www.WorkshopManuals.co.uk

## DISASSEMBLY AND REASSEMBLY

<L.H. drive vehicles>

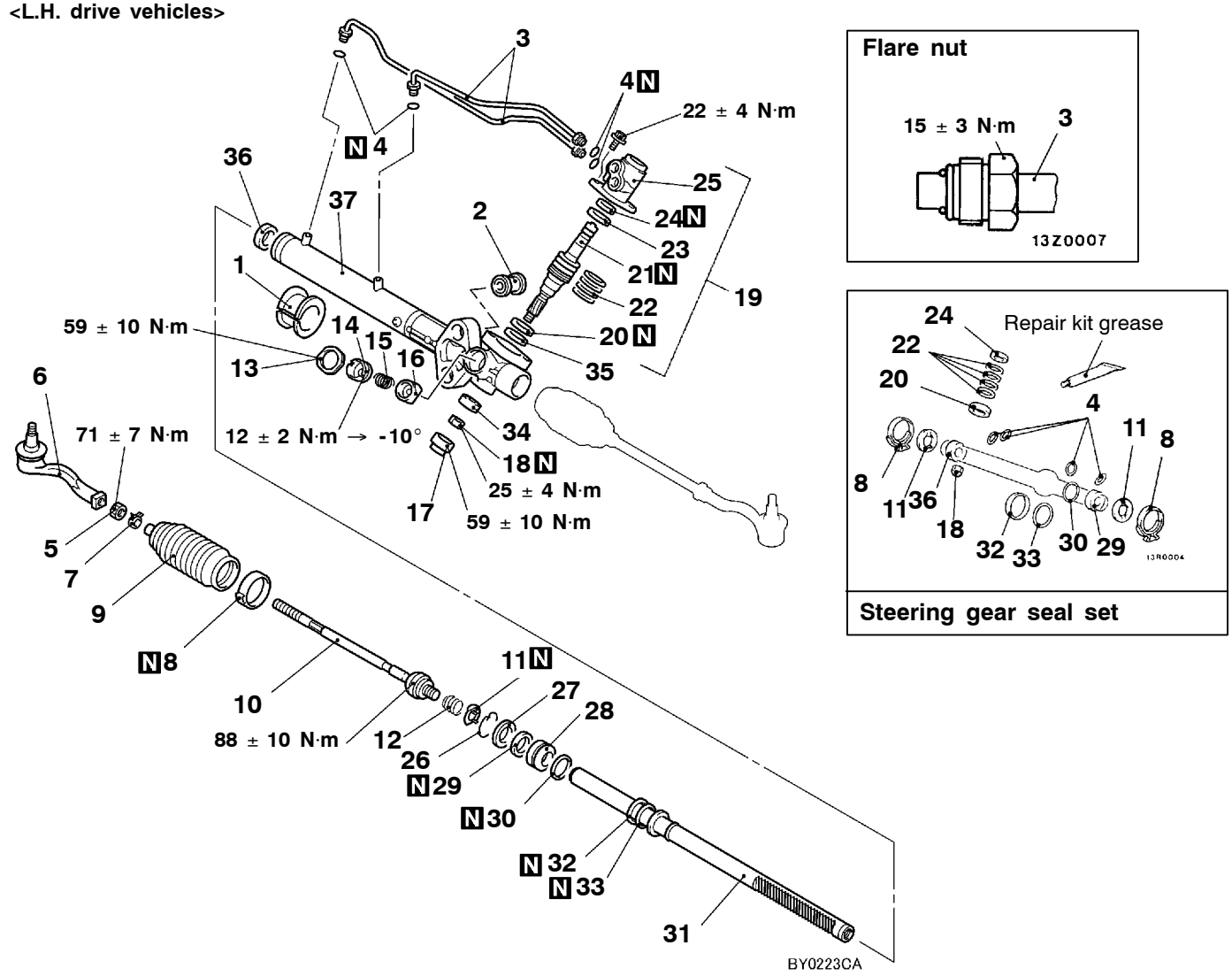


**Disassembly steps**

| | | |
|---|---|---|
| ▶O◀ | 1. | Gear mounting rubber cushion |
| | 2. | Gear housing mounting bushing |
| | 3. | Feed pipe |
| | 4. | O-ring |
| ▶N◀ | 5. | Lock nut |
| ▶N◀ | 6. | Tie rod end |
| | 7. | Clip |
| ▶M◀ | 8. | Band |
| | 9. | Bellows |
| ▶L◀ | 10. | Tie rod |
| ▶L◀ | 11. | Tab washer |
| | 12. | Coil spring |
| ▶K◀ | ● | Total pinion rotating torque adjustment |
| ▶J◀ | 13. | Lock nut |
| ◀A▶ ▶J◀ | 14. | Rack support cover |
| | 15. | Support spring |
| | 16. | Rack support |
| ▶I◀ | 17. | End plug |
| | 18. | Lock nut |
| | 19. | Valve housing assembly |
| ◀B▶ ▶H◀ | 20. | Lower oil seal |
| ◀B▶ | 21. | Pinion and valve assembly |
| ◀C▶ ▶G◀ | 22. | Seal ring |
| ◀D▶ ▶F◀ | 23. | Upper bearing |
| ◀D▶ ▶F◀ | 24. | Upper oil seal |
| | 25. | Valve housing |
| ◀E▶ ▶E◀ | 26. | Circlip |
| ◀F▶ | 27. | Rack stopper |
| ◀F▶ ▶D◀ | 28. | Rack bushing |
| ◀F▶ ▶D◀ | 29. | Oil seal |
| ◀F▶ | 30. | O-ring |
| ◀F▶ ▶C◀ | 31. | Rack assembly |
| ◀C▶ | 32. | Seal ring |
| | 33. | O-ring |
| ◀G▶ ▶B◀ | 34. | Lower bearing |
| ◀H▶ ▶B◀ | 35. | Needle bearing |
| ◀I▶ ▶A◀ | 36. | Oil seal |
| | 37. | Gear housing |

Purchased from www.WorkshopManuals.co.uk

www.WorkshopManuals.co.uk

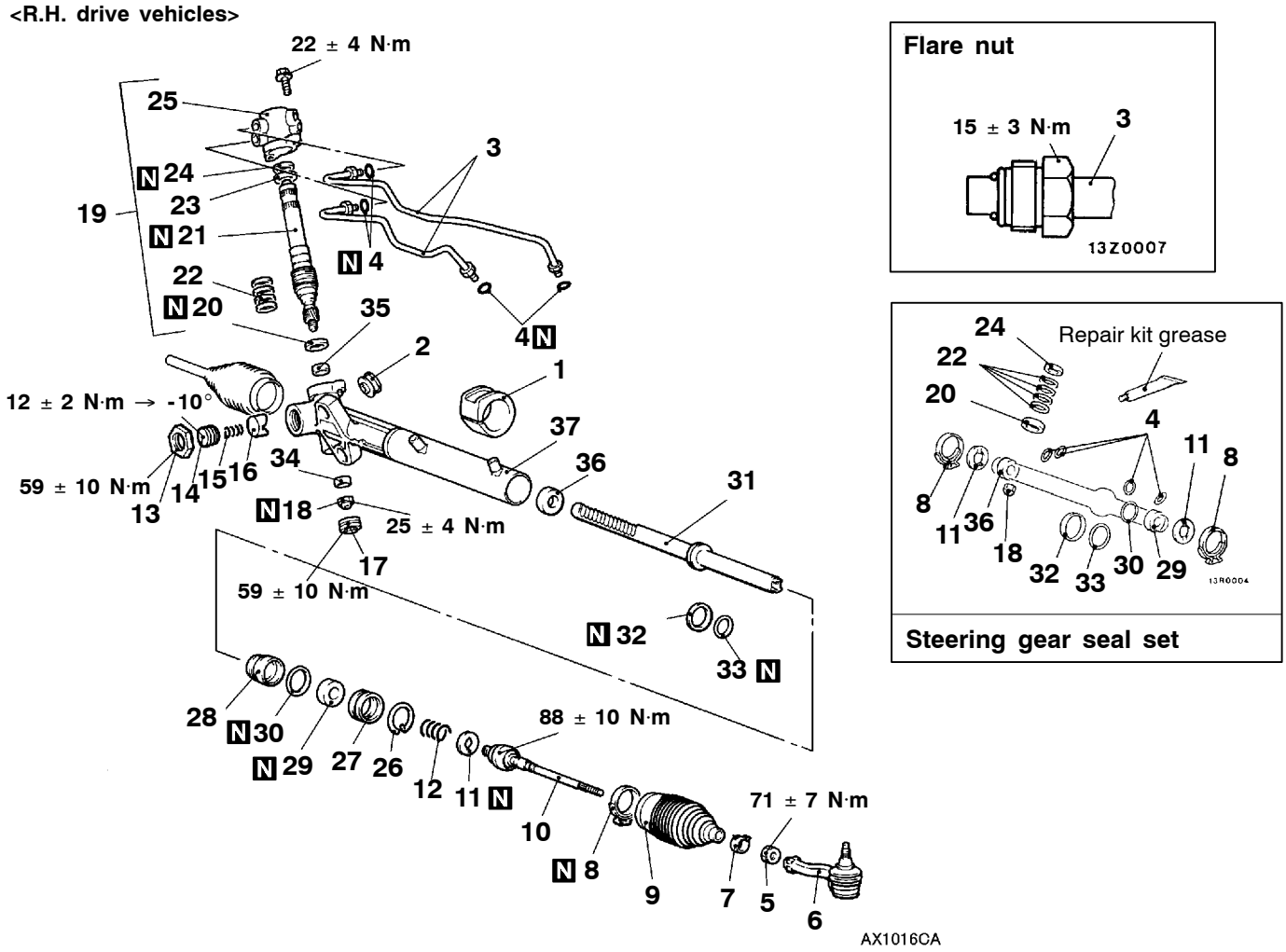


**Disassembly steps**

| | | |
|---|---|---|
| ▶O◀ | 1. | Gear mounting rubber cushion |
| | 2. | Gear housing mounting bushing |
| | 3. | Feed pipe |
| | 4. | O-ring |
| ▶N◀ | 5. | Lock nut |
| ▶N◀ | 6. | Tie rod end |
| | 7. | Clip |
| ▶M◀ | 8. | Band |
| | 9. | Bellows |
| ▶L◀ | 10. | Tie rod |
| ▶L◀ | 11. | Tab washer |
| | 12. | Coil spring |
| ▶K◀ | ● | Total pinion rotating torque adjustment |
| ▶J◀ | 13. | Lock nut |
| ◀A▶ ▶J◀ | 14. | Rack support cover |
| | 15. | Support spring |
| | 16. | Rack support |
| ▶I◀ | 17. | End plug |
| | 18. | Lock nut |
| | 19. | Valve housing assembly |
| ◀B▶ ▶H◀ | 20. | Lower oil seal |
| ◀B▶ | 21. | Pinion and valve assembly |
| ◀C▶ ▶G◀ | 22. | Seal ring |
| ◀D▶ ▶F◀ | 23. | Upper bearing |
| ◀D▶ ▶F◀ | 24. | Upper oil seal |
| | 25. | Valve housing |
| ◀E▶ ▶E◀ | 26. | Circlip |
| ◀F▶ | 27. | Rack stopper |
| ◀F▶ ▶D◀ | 28. | Rack bushing |
| ◀F▶ ▶D◀ | 29. | Oil seal |
| ◀F▶ | 30. | O-ring |
| ◀F▶ ▶C◀ | 31. | Rack assembly |
| ◀C▶ | 32. | Seal ring |
| | 33. | O-ring |
| ◀G▶ ▶B◀ | 34. | Lower bearing |
| ◀H▶ ▶B◀ | 35. | Needle bearing |
| ◀I▶ ▶A◀ | 36. | Oil seal |
| | 37. | Gear housing |

Purchased from www.WorkshopManuals.co.uk

www.WorkshopManuals.co.uk

## Lubrication and Sealing Points

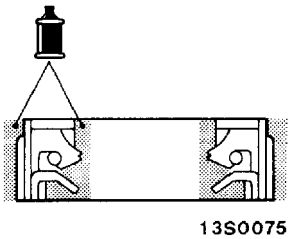


**Fluid:**
**Automatic transmission fluid DEXRON II**

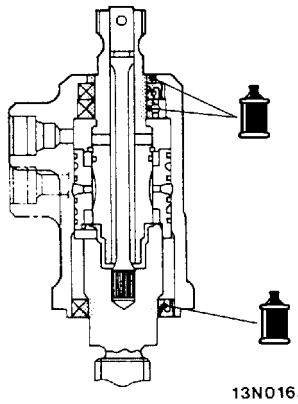


**Fluid:**
**Automatic transmission fluid DEXRON II**

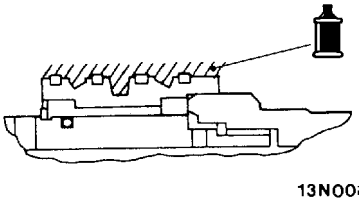


**Fluid:**
**Automatic transmission fluid DEXRON II**

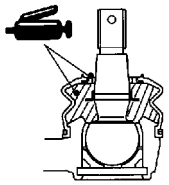


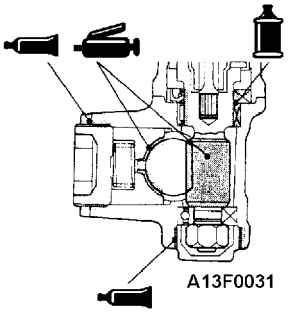


**Grease: Repair kit grease**
**Sealant: 3M ATD part No. 8663 or equivalent**
**Fluid:**
**Automatic transmission fluid DEXRON II**

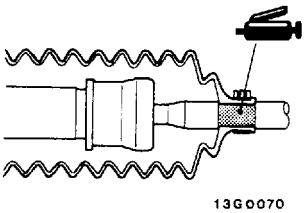


**Grease: Silicone grease**

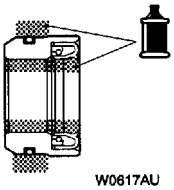


**Fluid:**
**Automatic transmission fluid DEXRON II**

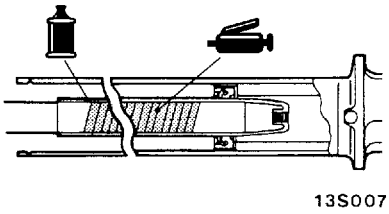


**Grease: Repair kit grease**
**Fluid:**
**Automatic transmission fluid DEXRON II**

CY0233CA

Purchased from www.WorkshopManuals.co.uk

www.WorkshopManuals.co.uk

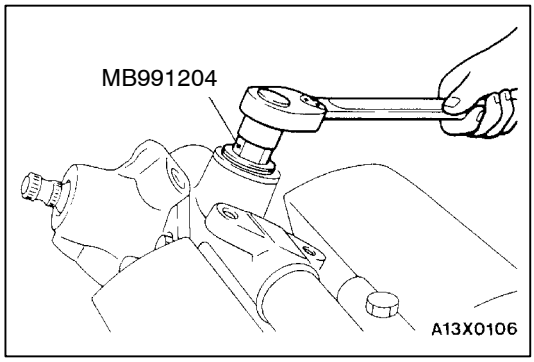


## DISASSEMBLY SERVICE POINTS

### ◀A▶ RACK SUPPORT COVER REMOVAL

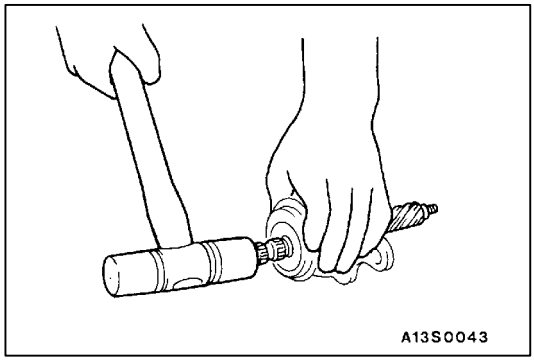


### ◀B▶ LOWER OIL SEAL/PINION AND VALVE ASSEMBLY REMOVAL

With a plastic hammer, lightly tap the pinion and valve assembly in its spline to remove the lower oil seal and pinion and valve assembly from the valve housing.

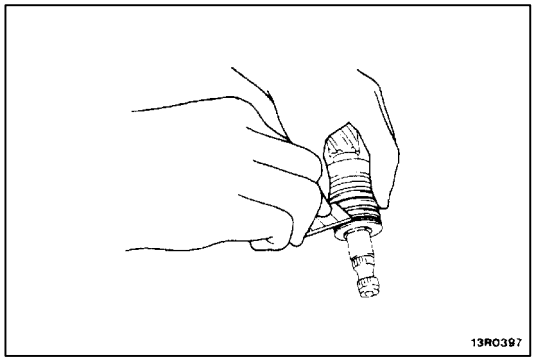


### ◀C▶ SEAL RING REMOVAL

Cut the seal ring to remove from the pinion and valve assembly.

**Caution**
**When cutting the seal ring, be careful not to damage the pinion and valve assembly.**

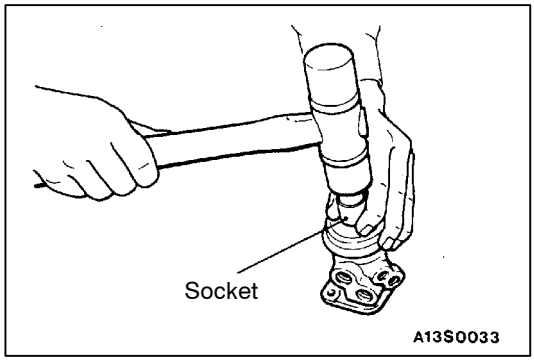


### ◀D▶ UPPER BEARING/UPPER OIL SEAL REMOVAL

Using a socket, pull out the upper oil seal and bearing from the valve housing.

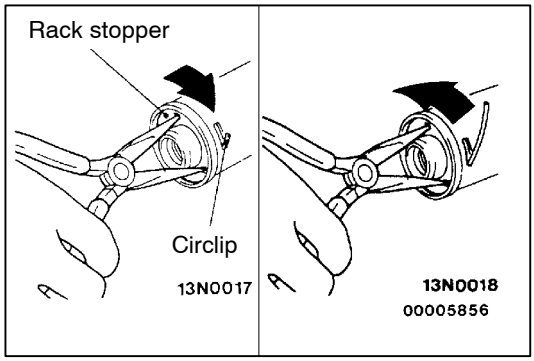


### ◀E▶ CIRCLIP REMOVAL

1. Turn the rack stopper clockwise until the circlip end comes out of the slot in the rack housing.
2. Turn the rack stopper anticlockwise to remove the circlip.

   **Caution**
   **Do not turn the rack stopper anticlockwise first. Otherwise, the circlip will get caught in the slot in the housing, which makes the rack stopper unable to turn.**

Purchased from www.WorkshopManuals.co.uk

www.WorkshopManuals.co.uk

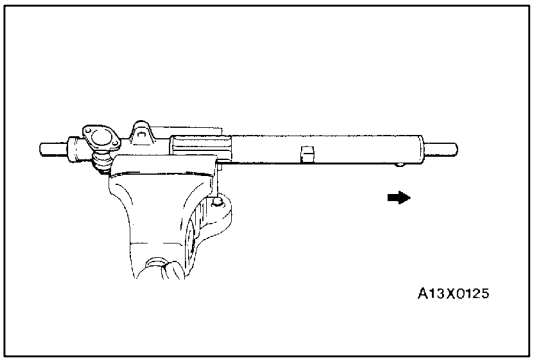


### ◀F▶ RACK STOPPER/RACK BUSHING/OIL SEAL/O-RING/RACK ASSEMBLY REMOVAL

1. Remove the rack stopper, rack bushing, oil seal and O-ring together by pulling out the rack gently.

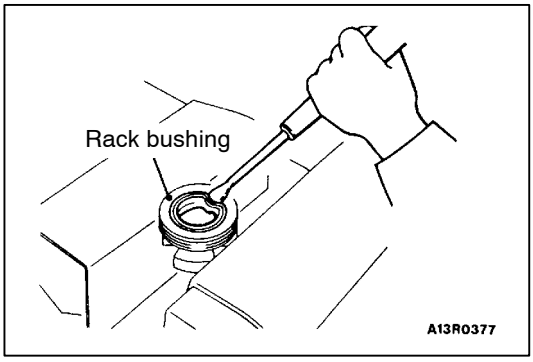


2. Partially bend the oil seal to remove from the rack bushing.

   **Caution**
   **Use care not to damage the oil seal press-fitting surface of the rack bushing.**

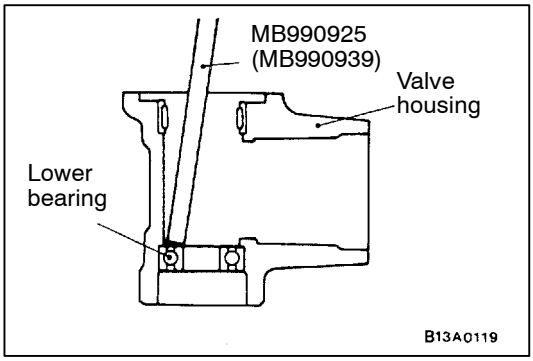


### ◀G▶ LOWER BEARING REMOVAL

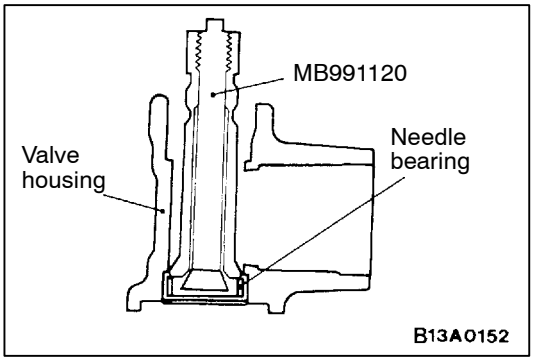


### ◀H▶ NEEDLE BEARING REMOVAL

**Caution**
**Do not twist the special tool too much, otherwise it may damage the inside surface of the valve housing.**

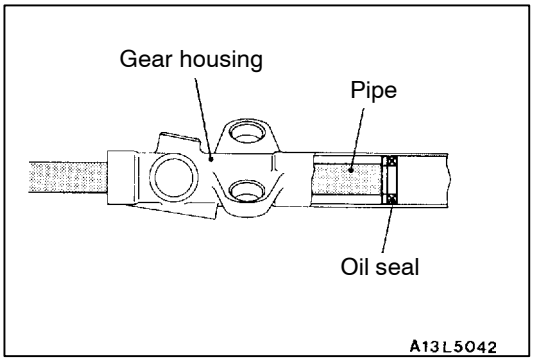


### ◀I▶ OIL SEAL REMOVAL

Use a pipe or the like to pull out the oil seal.

Purchased from www.WorkshopManuals.co.uk

www.WorkshopManuals.co.uk

## REASSEMBLY SERVICE POINTS

### ▶A◀ OIL SEAL INSTALLATION

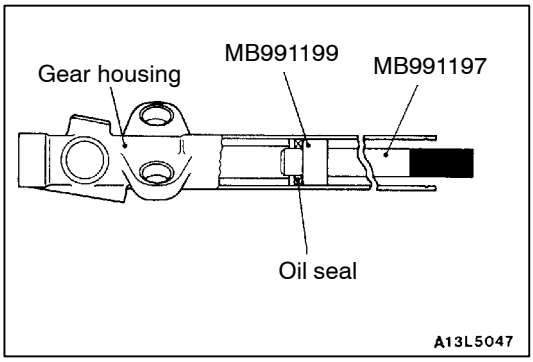


### ▶B◀ NEEDLE BEARING/LOWER BEARING INSTALLATION

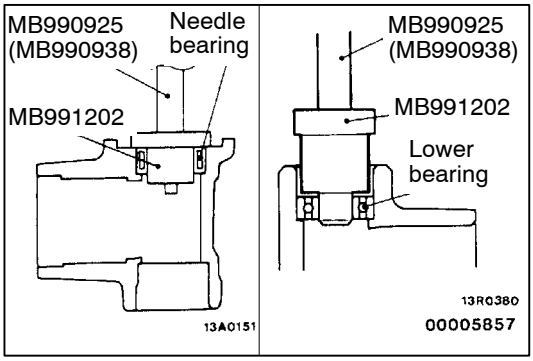


### ▶C◀ RACK ASSEMBLY INSTALLATION

1. Apply repair kit grease to the teeth of the rack assembly.

   **Caution**
   **Use care not to close the vent hole in the rack with grease.**

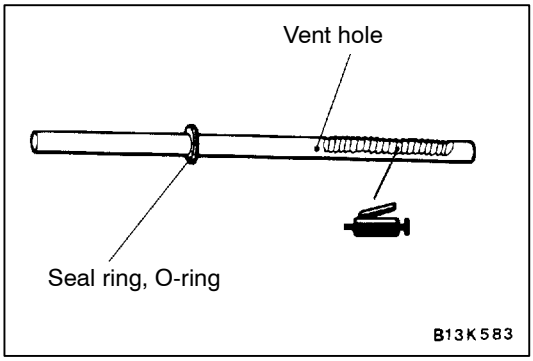


2. Cover the serrations of the rack assembly with the special tool.
3. Apply specified fluid to the outer surfaces of the special tool, seal ring and O-ring.

   **Specified fluid:**
   **Automatic transmission fluid DEXRON II**

   **Caution**
   **Do not use ATF-SP II M and ATF-SP III.**

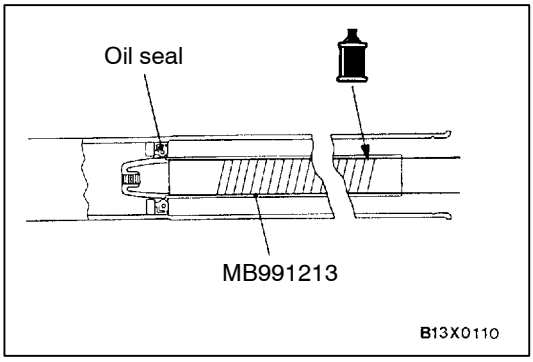


4. Slowly insert the rack covered with the special tool from the power cylinder side of the gear housing.

   **Caution**
   **Carefully push in the rack with the oil seal centre and the special tool end matched. This is to avoid the retainer spring coming off.**

Purchased from www.WorkshopManuals.co.uk

www.WorkshopManuals.co.uk

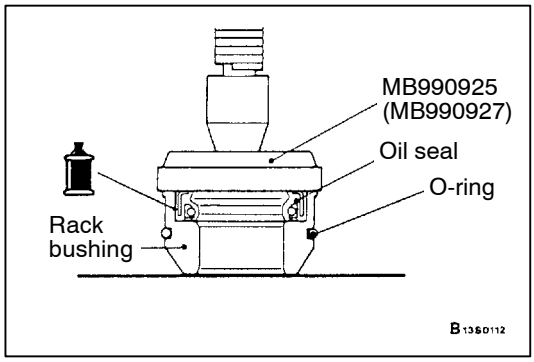


### ▶D◀ OIL SEAL/RACK BUSHING INSTALLATION

1. Apply specified fluid to the outer surface of the oil seal. Using the special tool, press in the oil seal until it is flush with the bushing end face.

   **Specified fluid:**
   **Automatic transmission fluid DEXRON II**

   **Caution**
   **Do not use ATF-SP II M and ATF-SP III.**

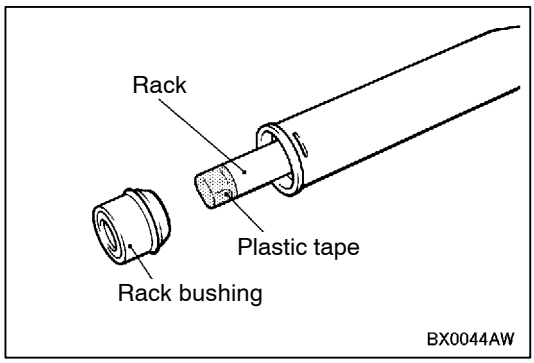


2. Apply the specified fluid to the oil seal inner surface and the O-ring.

   **Specified fluid:**
   **Automatic transmission fluid DEXRON II**

   **Caution**
   **Do not use ATF-SP II M and ATF-SP III.**

3. Wrap the rack end with plastic tape, and push the rack bushing onto the rack.

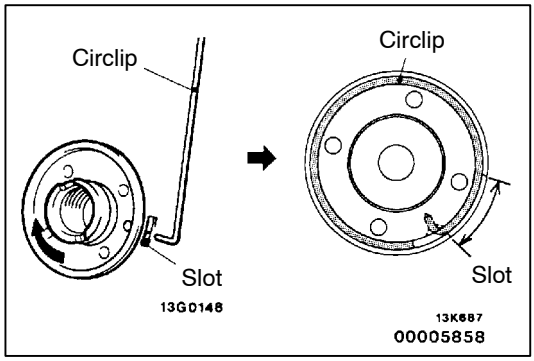


### ▶E◀ CIRCLIP INSTALLATION

Align the mark on the rack stopper and the slot in the cylinder. Then, insert the circlip into the rack stopper hole through the cylinder hole. Turn the rack stopper clockwise and insert the circlip firmly.

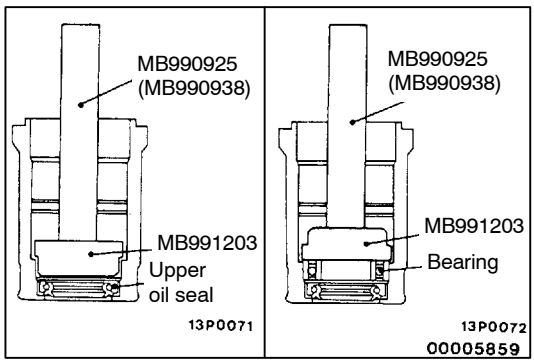


### ▶F◀ UPPER OIL SEAL/UPPER BEARING INSTALLATION

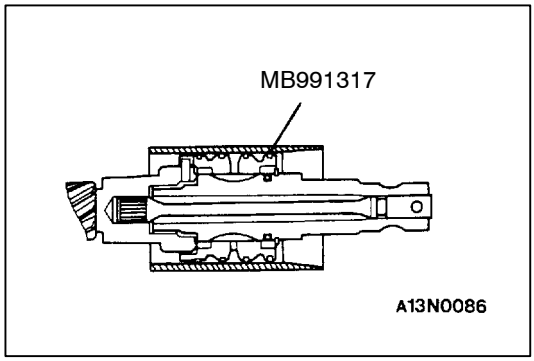


### ▶G◀ SEAL RING INSTALLATION

After installation, using the special tool or by hand, compress seal rings that expand during installation.

Purchased from www.WorkshopManuals.co.uk

www.WorkshopManuals.co.uk

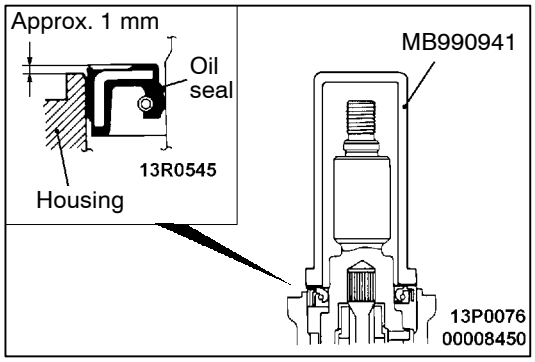


### ▶H◀ LOWER OIL SEAL INSTALLATION

Using the special tool, press the oil seal into the valve housing. The upper surface of the oil seal must project outwards about 1 mm from the housing end surface.

**Caution**
**When the oil seal is flush with or lower than the housing edge, reassemble the components. Otherwise, oil leaks will result.**

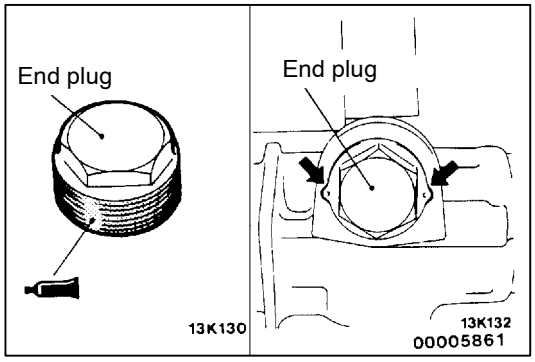


### ▶I◀ END PLUG INSTALLATION

1. Apply specified sealant to the threaded section of the end plug, and then install the end plug to the gear housing.

   **Specified fluid:**
   **3M ATD Part No.8663 or equivalent**
2. Use a punch to bend over the two tabs on the sides of the end plug to prevent the end plug from turning.

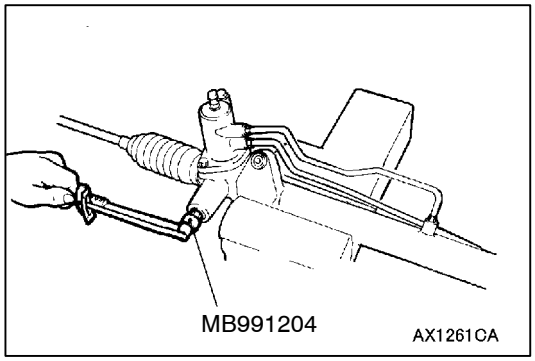


### ▶J◀ RACK SUPPORT COVER/LOCKING NUT INSTALLATION

1. Apply specified sealant to the rack cover support thread.

   **Specified fluid:**
   **3M ATD Part No.8663 or equivalent**
2. Using the special tool, tighten the rack support cover to 12 ± 2 N·m.
3. Return the rack support cover by about 10°.
4. Tighten the locking nut to the specified torque, using the special tool to prevent the rack support cover from spinning.

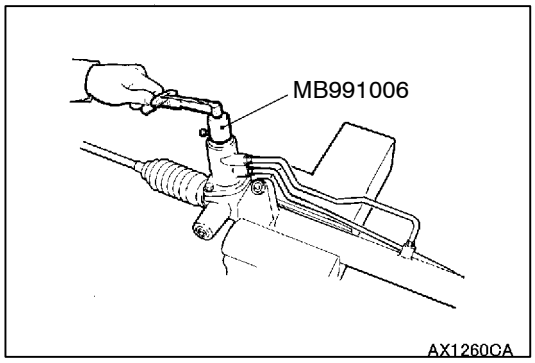


### ▶K◀ PINION TOTAL ROTATION TORQUE ADJUSTMENT

1. Using the special tool, measure total rotation torque by turning the pinion gear at a speed of one rotation per 4 to 6 seconds.

   **Standard value:**
   **Total rotation torque: 0.6 - 1.7 Nm**
   **Torque fluctuation: 0.4 Nm or less**
2. If the total rotation torque or torque fluctuation does not meet the standard values, adjust by returning the rack support cover within a range of 0 to 30°.

   **Caution**
   **(1) Adjust around the maximum limit of the standard values.**
   **(2) See that no ratcheting or catching are present when operating the rack towards the shaft direction.**
   **(3) Measure the total pinion torque through the whole stroke of the rack.**
3. If the adjustment is impossible in the given range, check the components of the rack support cover, and replace if necessary.

Purchased from www.WorkshopManuals.co.uk

www.WorkshopManuals.co.uk

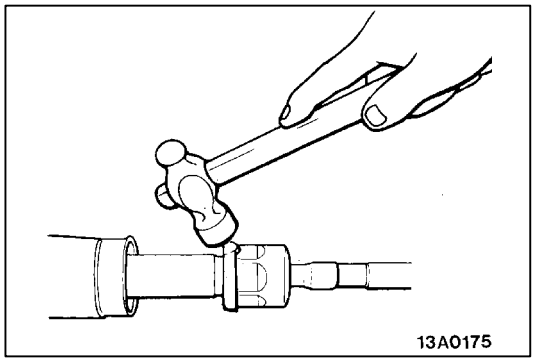


### ▶L◀ TAB WASHER/TIE ROD INSTALLATION

After installing the tie rod to the rack, fold the tab washer end (2 locations) to the tie rod notch.

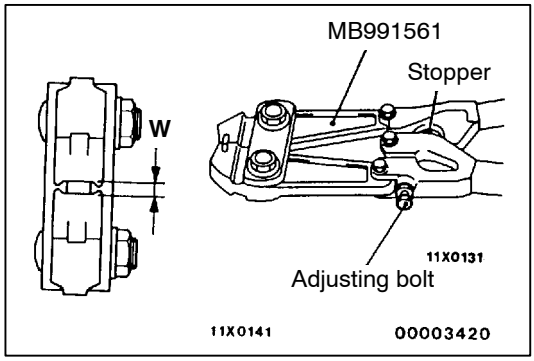


### ▶M◀BELLOWS BAND INSTALLATION

1. Turn the adjusting bolt of the special tool to adjust the opening dimension (W) to the standard value.

   **Standard value (W): 2.9 mm**
   **<When more than 2.9 mm>**
   **Screw in the adjusting bolt.**
   **<When less than 2.9 mm>**
   **Loosen the adjusting bolt.**

   NOTE
   (1) The dimension (W) is adjusted by about 0.7 mm per one turn.
   (2) Do not turn the adjusting bolt more than one turn.

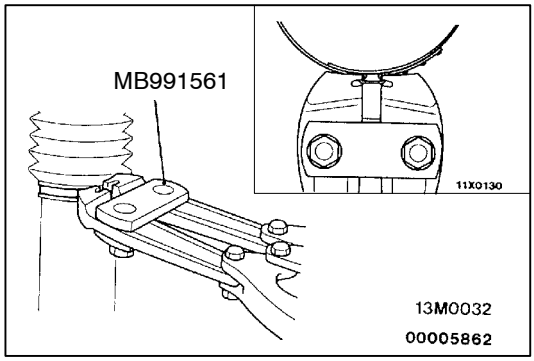


2. Use the special tool to crimp the bellows band.

   **Caution**
   **(1) Hold the rack housing, and use the special tool to crimp the bellows band securely.**
   **(2) Crimp the bellows band until the special tool touches the stopper.**

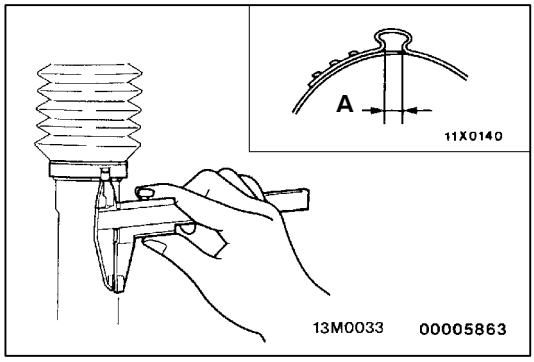


3. See that the crimped width (A) meets the standard value.

   **Standard value (A): 2.4 - 2.8 mm**
   **<When more than 2.8 mm>**
   Readjust the dimension (W) of step (1) to the value calculated by the following equation, and repeat step (2).

   **W = 5.5 mm - A [Example: If (A) is 2.9 mm, (W) is 2.6 mm.]**

   **<When less than 2.4 mm>**
   Remove the bellows band, readjust the dimension (W) of step (1) to the value calculated by the following equation, and use a new bellows band to repeat steps (2) to (3).

   **W = 5.5 mm - A [Example: If (A) is 2.3 mm, (W) is 3.2 mm.]**

Purchased from www.WorkshopManuals.co.uk

www.WorkshopManuals.co.uk

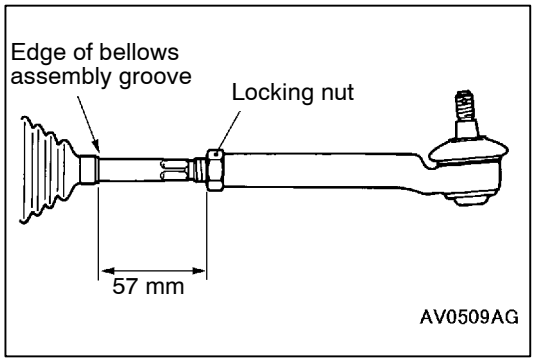


### ▶N◀ TIE ROD END/LOCKING NUT INSTALLATION

Screw in the tie rod end until the dimension shown is achieved. Then, temporarily tighten with the locking nut.

NOTE
The locking nut must be tightened securely only after the power steering gear box and linkage are installed to the vehicle and toe-in is adjusted.

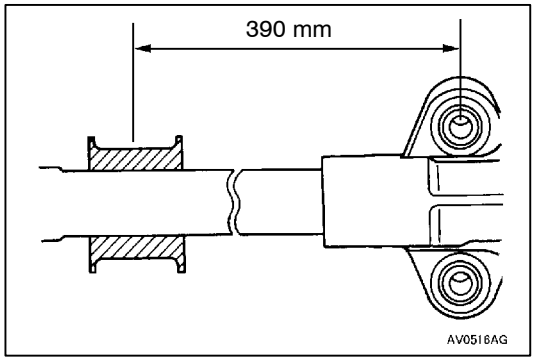


### ▶O◀ GEAR MOUNTING RUBBER INSTALLATION

Install the gear mounting rubber to the rack housing so that the distance is as shown in the illustration.

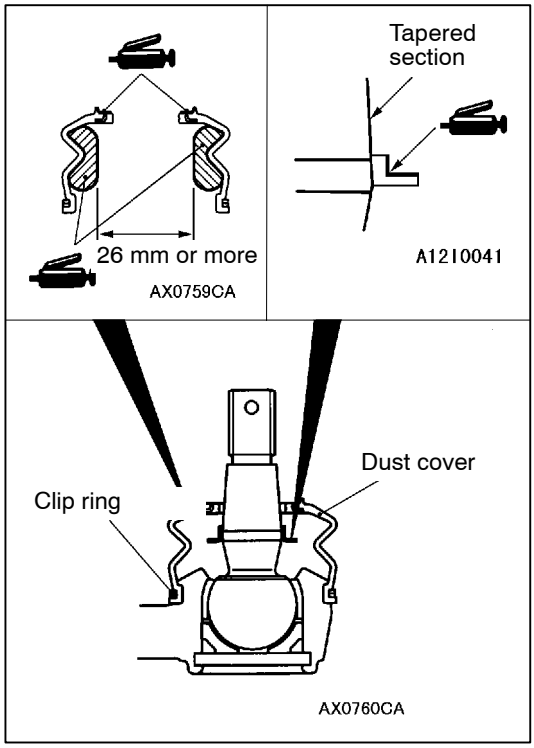


## TIE ROD END BALL JOINT DUST COVER REPLACEMENT

Only when the dust cover is damaged accidentally during service work, replace the dust cover as follows:

1. Remove the clip ring, and then remove the dust cover.
2. Refill multi-purpose grease inside the dust cover as shown in the illustration.
3. Apply multi-purpose grease to the top of the dust cover and to the retainer of the ball joint stud.
4. Wrap the stud thread of the tie rod end ball joint with vinyl tape, and then install the dust cover to the tie rod end ball joint.

   **Caution**
   **Do not apply multi-purpose grease to the place (tapered section) where the threaded section of the ball joint connects with the knuckle. Wipe away any grease which gets on this section.**
5. Secure the dust cover in place with the clip ring.

   **Caution**
   **To prevent the grease to be applied on the ball joint connection (taper) with knuckle, do not compress the dust cover before installation.**
6. Press the dust cover with your finger to check that there are no cracks or damage in the dust cover.

Purchased from www.WorkshopManuals.co.uk

www.WorkshopManuals.co.uk

# POWER STEERING OIL PUMP

## REMOVAL AND INSTALLATION

**Pre-removal Operation**
- Battery and Battery Tray Removal
- Power Steering Fluid Draining (Refer to P.37A-9.)

**Post-installation Operation**
- Power Steering Fluid Supplying and Bleeding (Refer to P.37A-9.)
- Battery and Battery Tray Installation
- Drive Belt Tension Adjusting <6G7, 4D5> (Refer to GROUP 11A/11B – On-vehicle Service.)

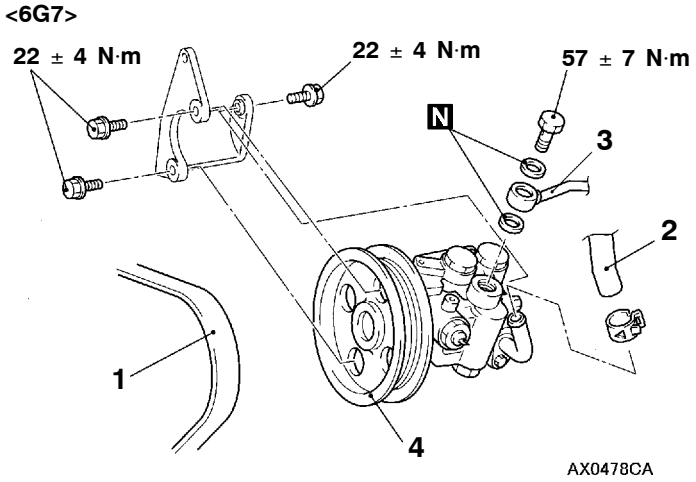


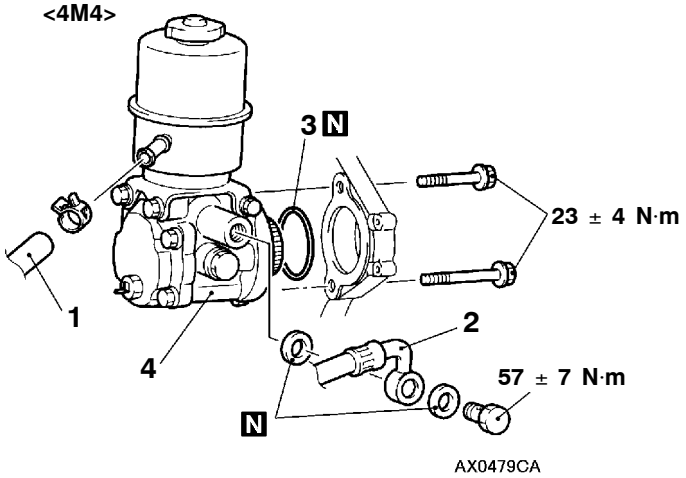


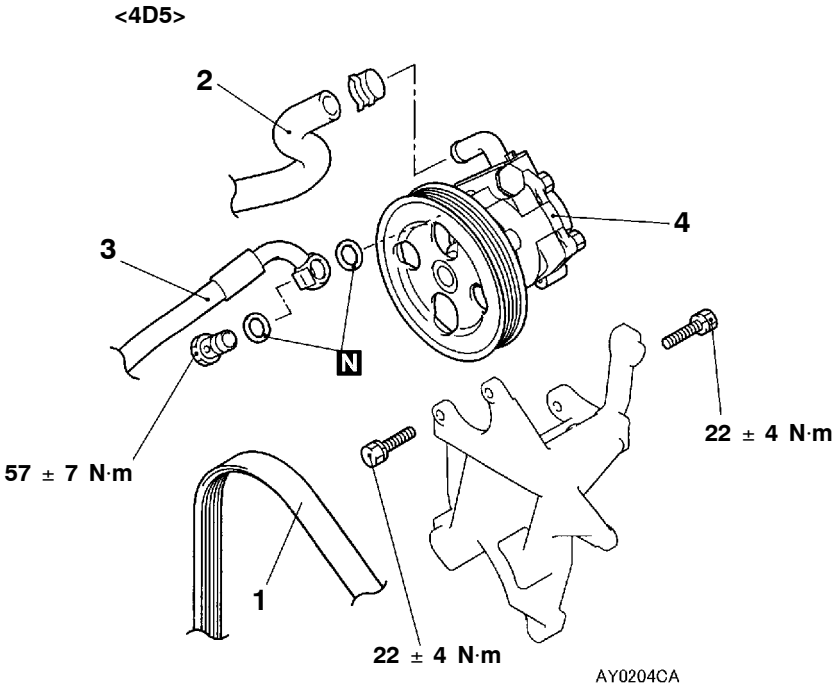


**Removal steps**

**<6G7, 4D5>**
1. Drive belt (Refer to GROUP 11A, 11B.)
2. Suction hose
3. Pressure tube
4. Oil pump assembly

**<4M4>**
- Engine cover (Refer to GROUP 11C.)

1. Pressure hose
2. Return hose B
3. O-ring
4. Oil pump assembly

Purchased from www.WorkshopManuals.co.uk

www.WorkshopManuals.co.uk

## DISASSEMBLY AND REASSEMBLY

**<6G7, 4D5>**

**Caution**
**Never disassemble the terminal assembly unable to be reassembled.**

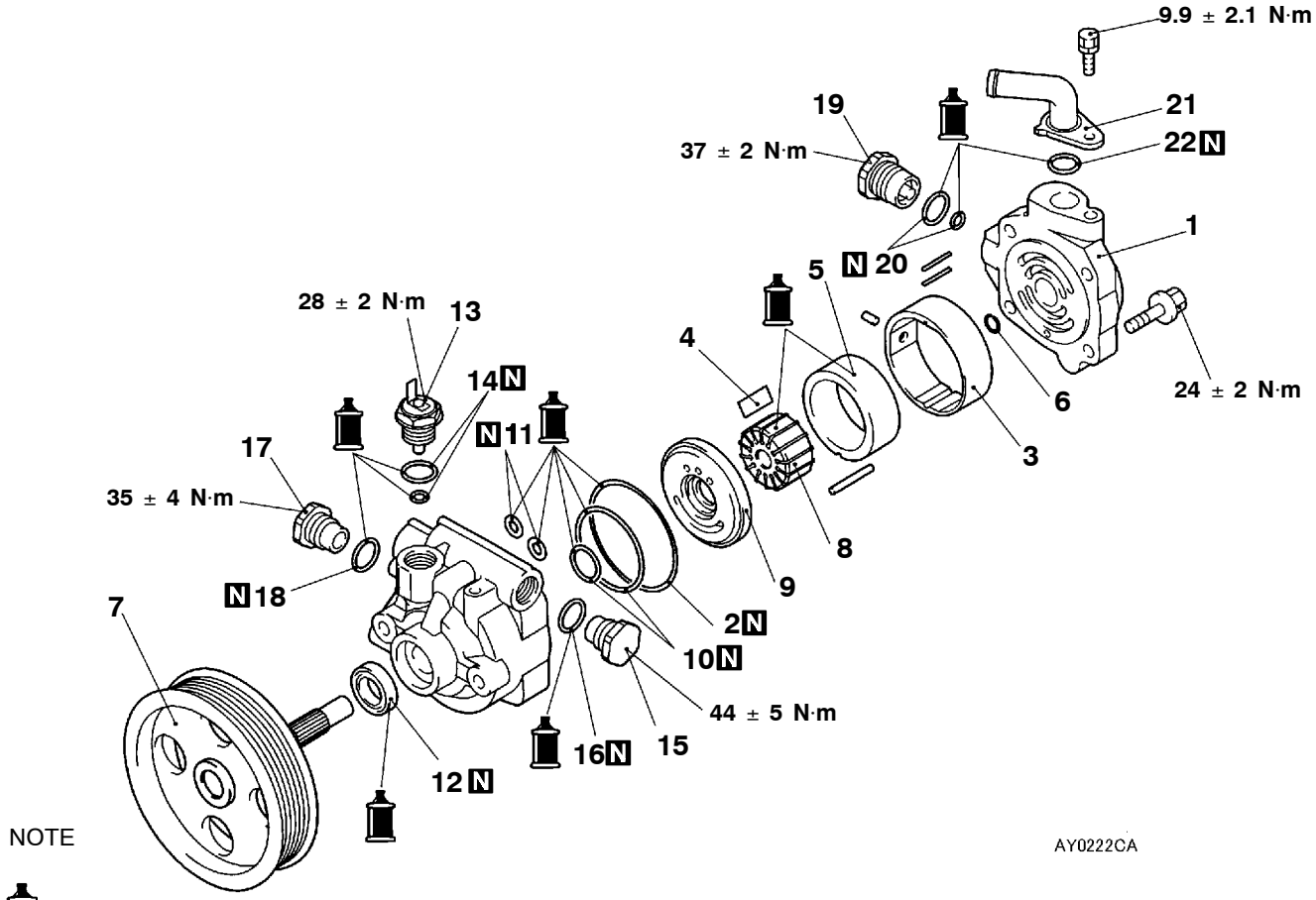


NOTE

: Automatic transmission fluid DEXRON II

| | | |
|---|---|---|
| 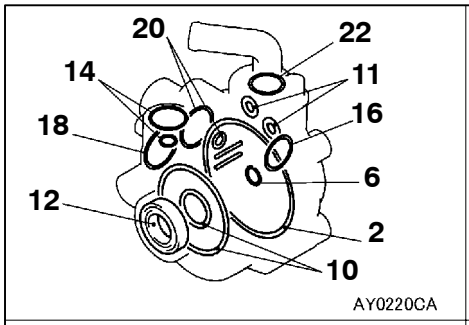  | 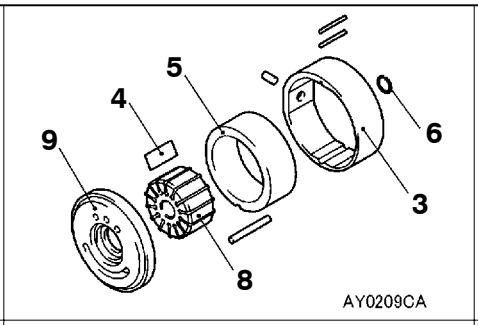  | 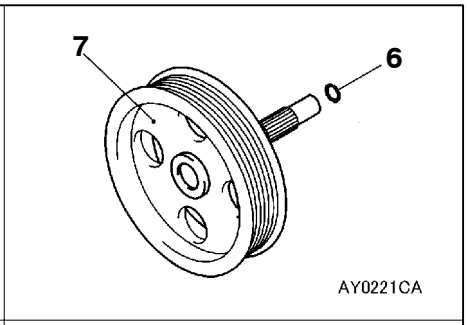  |
| **Oil pump seal kit** | **Oil pump cartridge kit** | **Oil pump pulley and shaft kit** |

**Disassembly steps**

1. Pump cover
2. O-ring
3. Adapter ring
- ▶E◀ 4. Vanes
- ▶D◀ 5. Cam ring
6. Snap ring
7. Pulley and shaft
- ▶C◀ 8. Rotor
9. Side plate
- ▶A◀ 10. O-ring
- ▶A◀ 11. O-ring
- ▶B◀ 12. Oil seal
13. Terminal assembly <6G7>
- ▶A◀ 14. O-ring <6G7>
15. Inner plug A
- ▶A◀ 16. O-ring
17. Inner plug B
- ▶A◀ 18. O-ring
19. Inner plug C
- ▶A◀ 20. O-ring
21. Suction connector
- ▶A◀ 22. O-ring

Purchased from www.WorkshopManuals.co.uk

www.WorkshopManuals.co.uk

<4M4>

**Caution**
**Never disassemble the terminal assembly unable to be reassembled.**

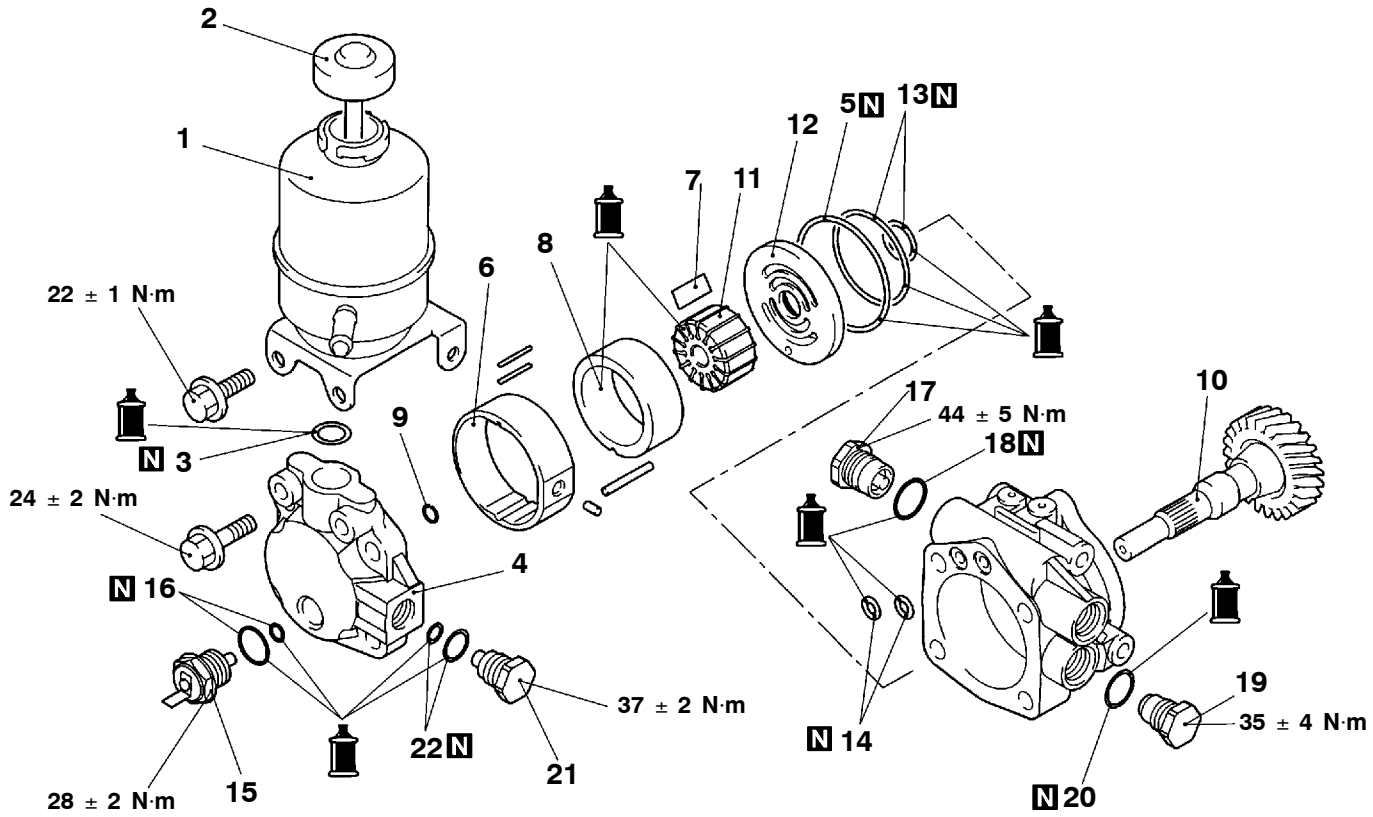


NOTE
: Automatic transmission fluid DEXRON II

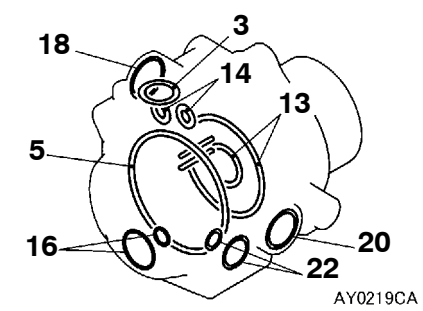


**Oil pump seal kit**

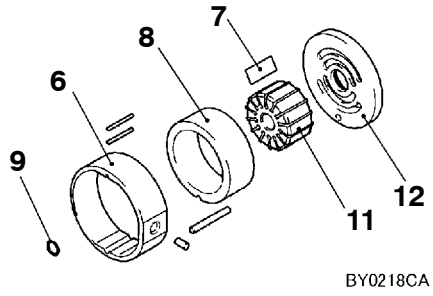


**Oil pump cartridge kit**

**Disassembly steps**

1. Tank assembly
2. Cap assembly
▶A◀ 3. O-ring
4. Pump cover
5. O-ring
6. Adapter ring
▶D◀ 7. Vanes
▶C◀ 8. Cam ring
9. Snap ring
10. Oil pump gear
▶B◀ 11. Rotor
12. Side plate
▶A◀ 13. O-ring
▶A◀ 14. O-ring
15. Terminal assembly
▶A◀ 16. O-ring
17. Inner plug A
▶A◀ 18. O-ring
19. Inner plug B
▶A◀ 20. O-ring
21. Inner plug C
▶A◀ 22. O-ring

Purchased from www.WorkshopManuals.co.uk

www.WorkshopManuals.co.uk

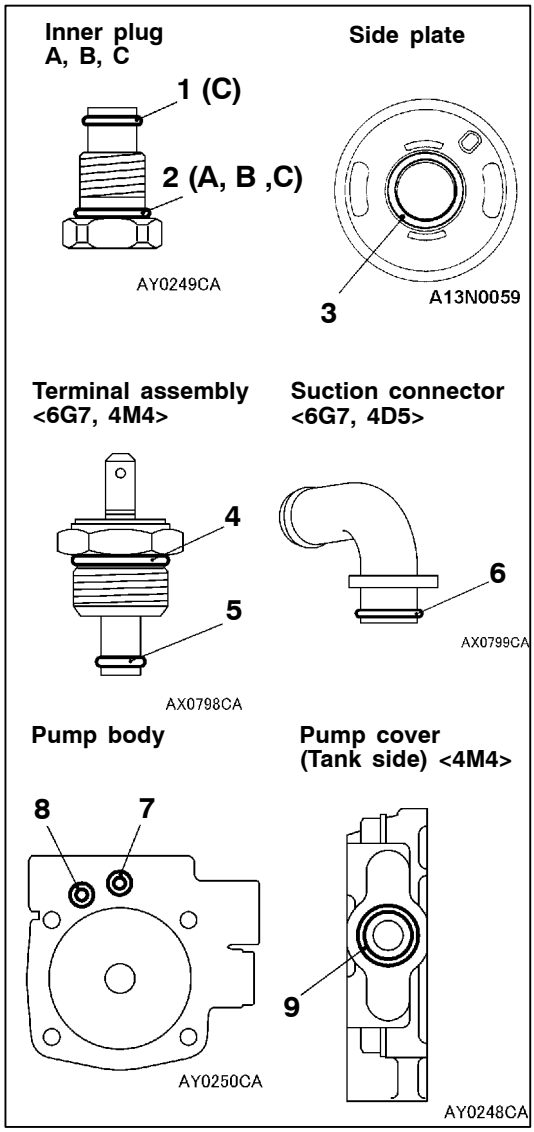


## REASSEMBLY SERVICE POINTS

### ▶A◀ O-RING INSTALLATION

| No. | | ID × Width mm |
|---|---|---|
| 1 | | 6.8 × 1.9 |
| 2 | Inner plug A, C | 12.4 × 2.6 |
| | Inner plug B | 14.8 × 2.4 |
| 3 | | 21 × 1.9 |
| 4 | | 14.8 × 1.9 |
| 5 | | 3.8 × 1.9 |
| 6 | | 15.8 × 2.4 |
| 7 | | 9.8 × 1.9 |
| 8 | | 6.8 × 1.9 |
| 9 | | 13.8 × 2.4 |

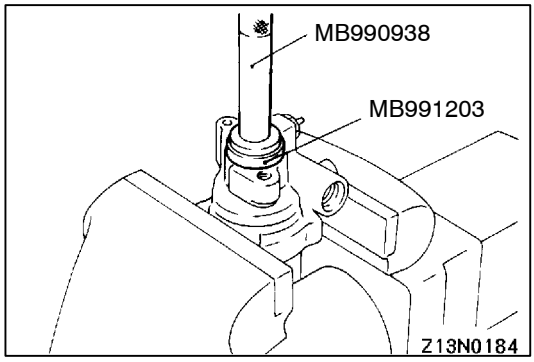


### ▶B◀ OIL SEAL INSTALLATION <6G7, 4D5>

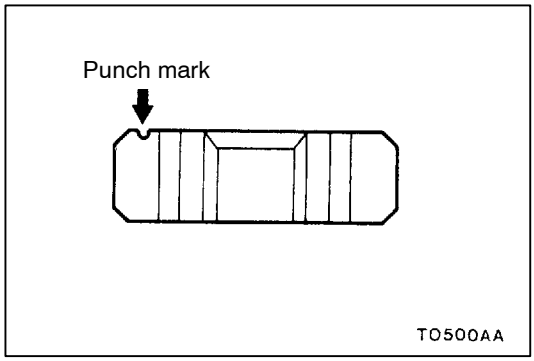


### ▶C◀ ROTOR INSTALLATION

Install the rotor with its punch mark towards the side plate.

Purchased from www.WorkshopManuals.co.uk

www.WorkshopManuals.co.uk

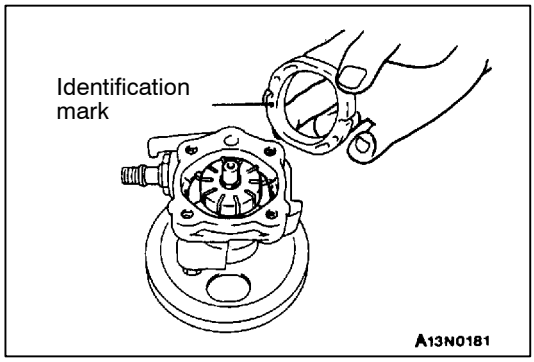


### ▶D◀ CAM RING INSTALLATION

Install the cam ring with its identification mark towards the side plate.

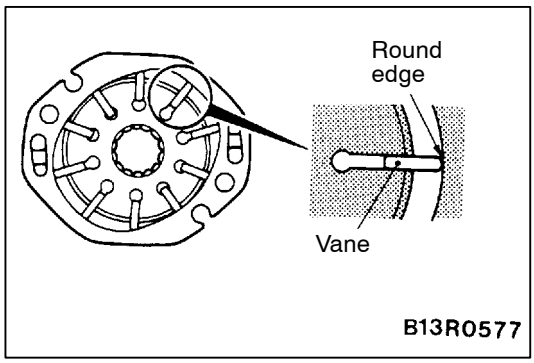


### ▶E◀ VANE INSTALLATION

Install the vane to the rotor with its round edge outwards (towards cam ring).

Purchased from www.WorkshopManuals.co.uk

www.WorkshopManuals.co.uk

# POWER STEERING OIL HOSES

## REMOVAL AND INSTALLATION

**Pre-removal Operation**
- Under Cover Removal
- Power Steering Fluid Draining (Refer to P.37A-10.)
- Battery and Battery Tray Removal
- Condense Tank Removal (Refer to GROUP 14.)

**Post-installation Operation**
- Condense Tank Installation (Refer to GROUP 14.)
- Battery and Battery Tray Installation
- Power Steering Fluid Adding and Air Bleeding (Refer to P.37A-10.)
- Under Cover Installation
- Drive Belt Tension Check <6G7, 4D5> (Refer to GROUP11A/11B – On-vehicle Service.)

**<L.H. drive vehicles – 6G7, 4M4>**

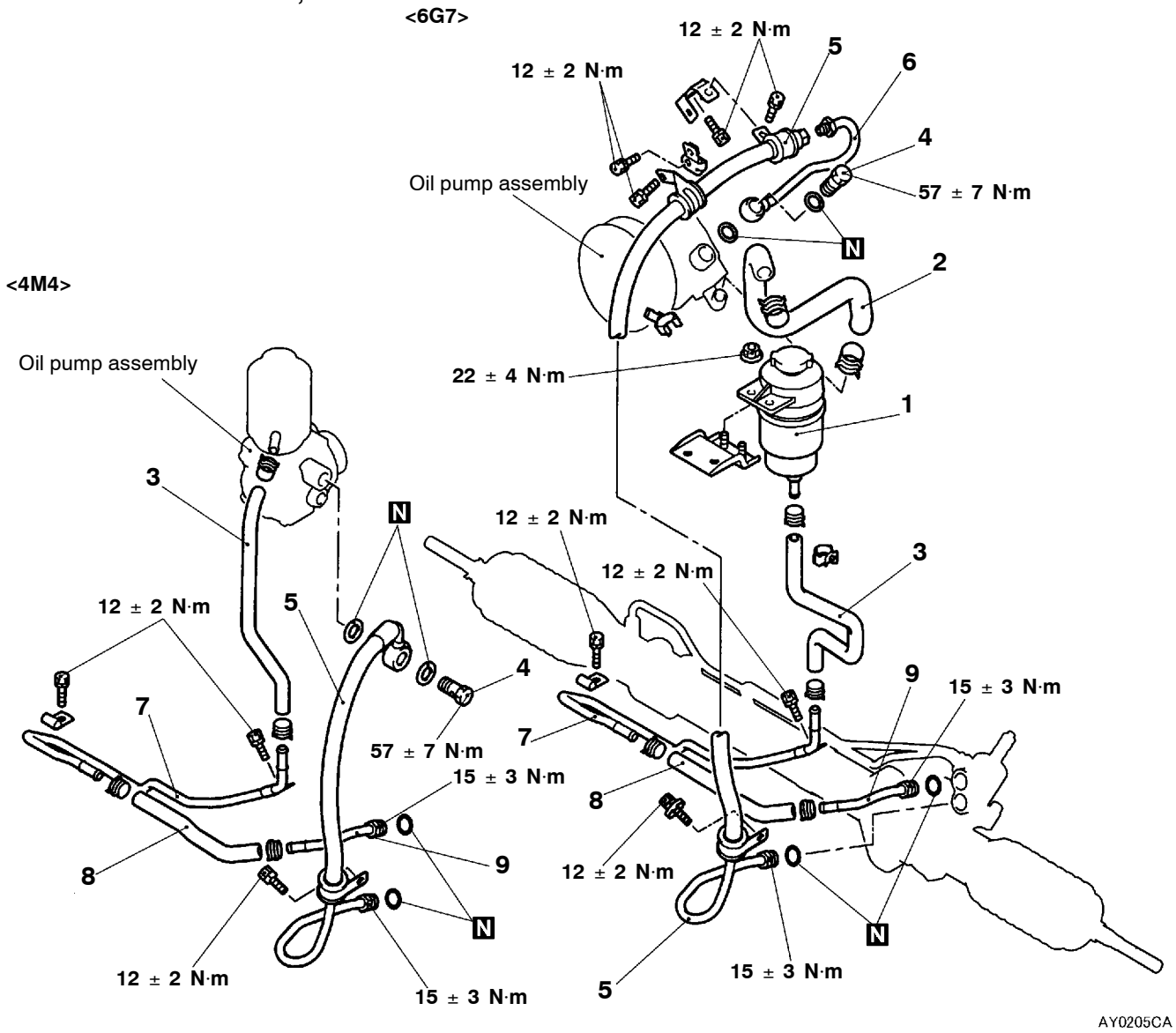


**Removal steps**

1. Oil reservoir <6G7>
2. ▶D◀ Suction hose <6G7>
3. ▶C◀ Return hose B
4. Eye bolt
5. ▶A◀ Pressure hose assembly
6. ▶A◀ Pressure tube <6G7>
7. ▶B◀ Cooler tube
8. ▶B◀ Return hose A
9. ▶A◀ Return tube

Purchased from www.WorkshopManuals.co.uk

www.WorkshopManuals.co.uk

<L.H. drive vehicles – 4D5>

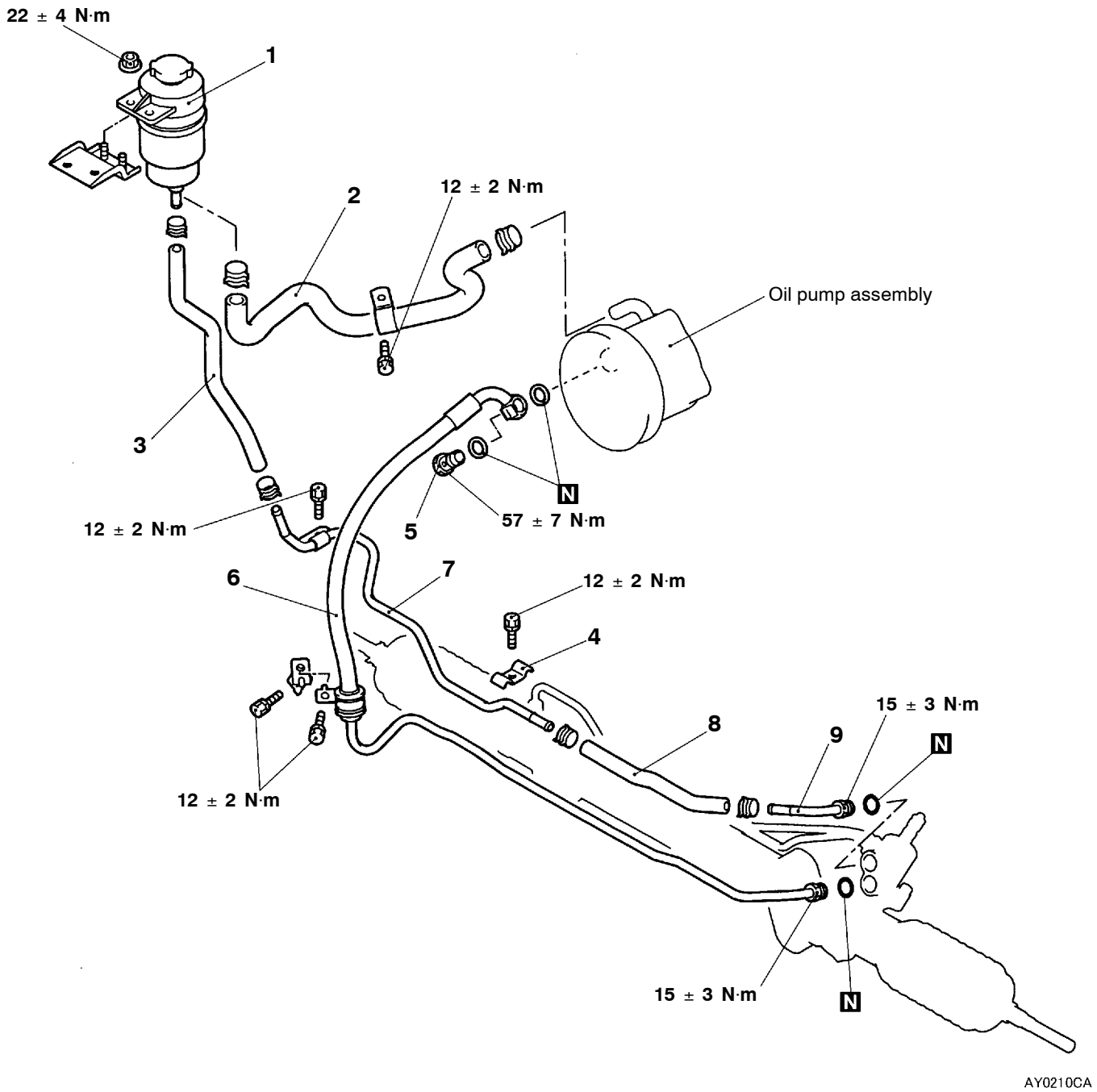


**Removal steps**

1. Oil reservoir
- ▶D◀ 2. Suction hose
- ▶C◀ 3. Return hose B
4. Tube clip
5. Eye bolt
6. Pressure hose assembly
- ▶B◀ 7. Cooler tube
- ▶B◀ 8. Return hose A
- ▶A◀ 9. Return tube

Purchased from www.WorkshopManuals.co.uk

www.WorkshopManuals.co.uk

<R.H. drive vehicles – 6G7, 4M4>

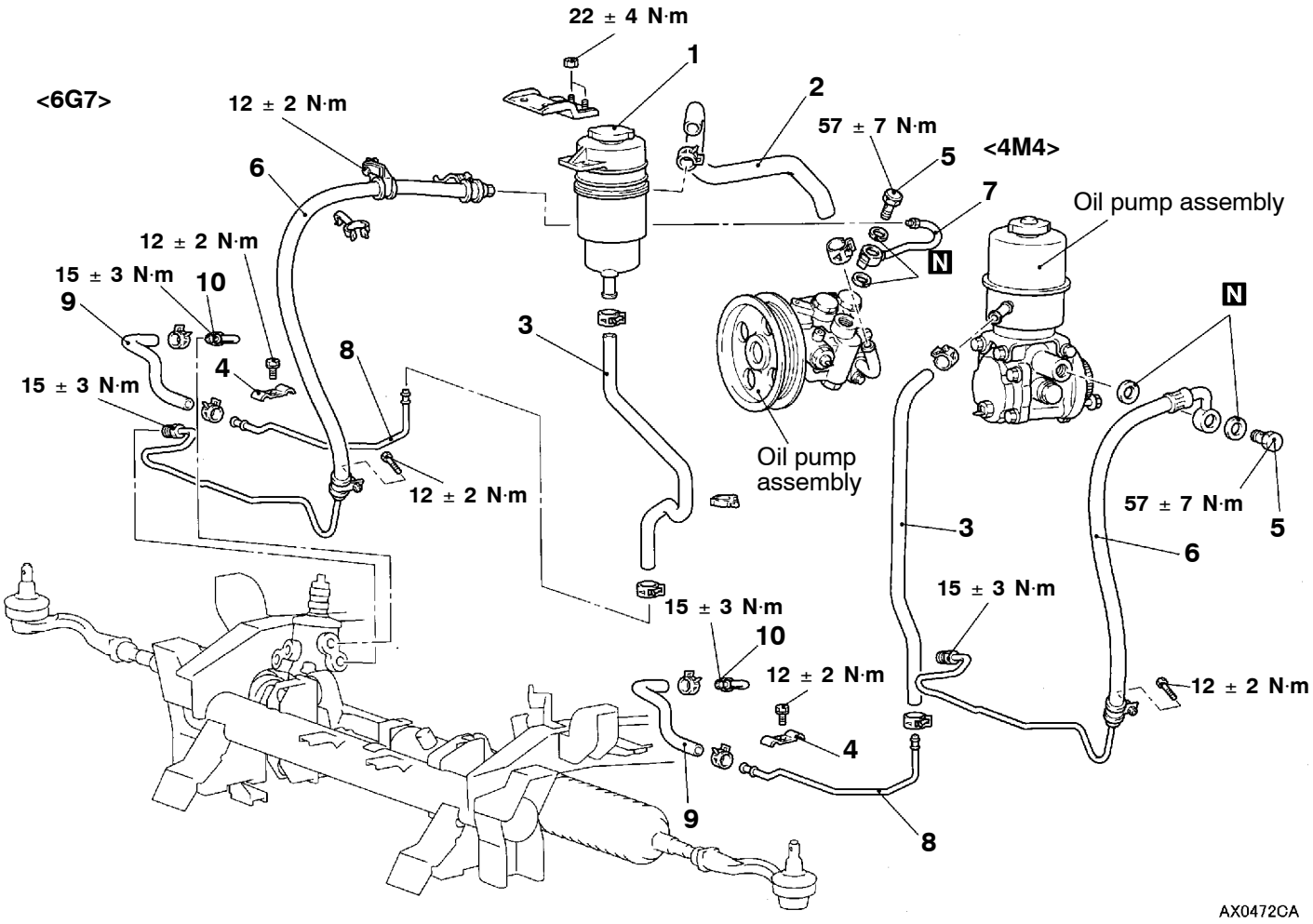


**Removal steps**

1. Oil reservoir <6G7>
▶D◀ 2. Suction hose <6G7>
▶C◀ 3. Return hose B
4. Tube clip
5. Eye bolt
▶A◀ 6. Pressure hose assembly
▶B◀ 7. Pressure tube <6G7>
▶B◀ 8. Cooler tube
▶B◀ 9. Return hose A
▶A◀ 10. Return tube

Purchased from www.WorkshopManuals.co.uk

www.WorkshopManuals.co.uk

<R.H. drive vehicles – 4D5>

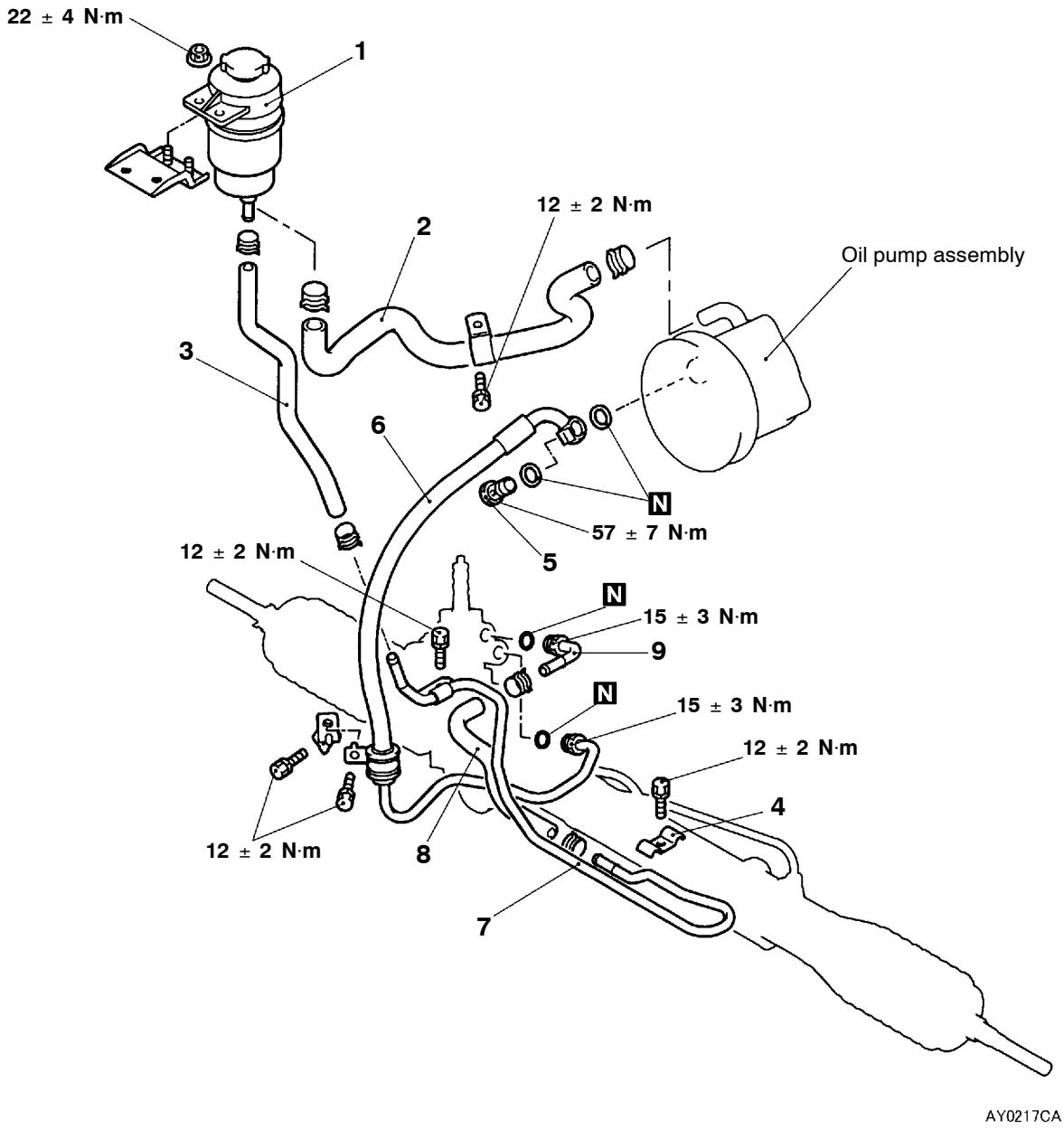


**Removal steps**

1. Oil reservoir
2. ▶D◀ Suction hose
3. ▶C◀ Return hose B
4. Tube clip
5. Eye bolt
6. Pressure hose assembly
7. ▶B◀ Cooler tube
8. ▶B◀ Return hose A
9. ▶A◀ Return tube

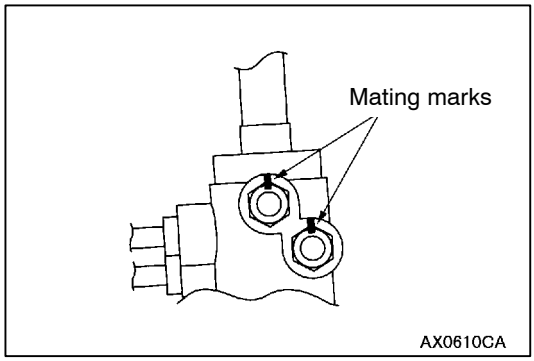


## INSTALLATION SERVICE POINTS

### ▶A◀ RETURN TUBE/PRESSURE TUBE <6G7>/ PRESSURE HOSE ASSEMBLY <6G7> INSTALLATION

1. Align the mating marks on the gear box and return tubes when installing.

Purchased from www.WorkshopManuals.co.uk

www.WorkshopManuals.co.uk

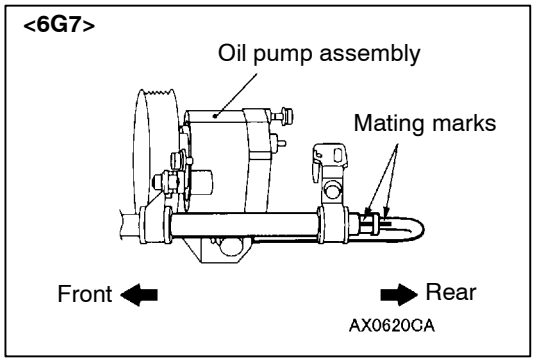


2. Install the pressure hose assembly and the pressure tubes so that the mating marks are facing upwards <6G7>.

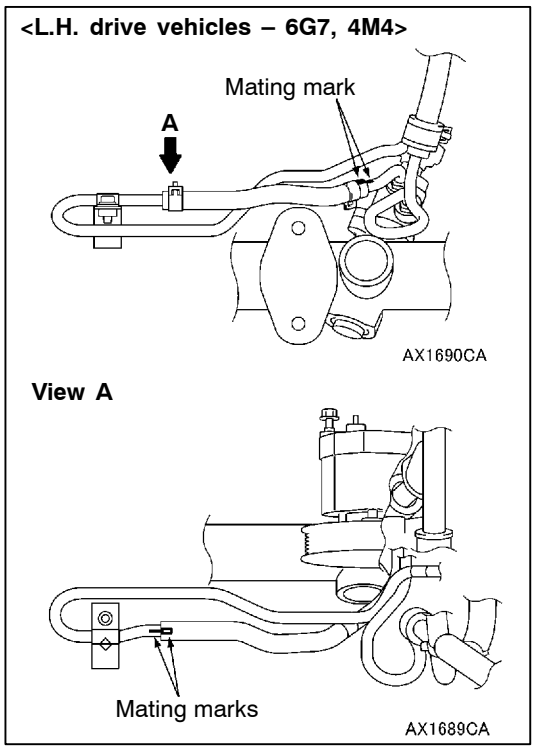


**▶B◀ RETURN HOSE A/COOLER TUBE INSTALLATION**

Install so that the mating marks are facing upwards.

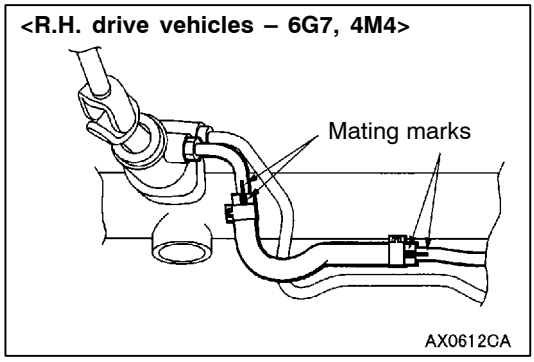


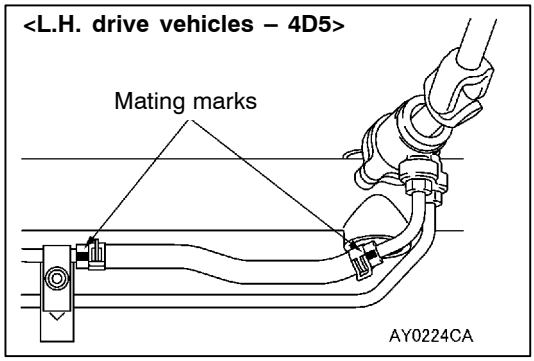


Purchased from www.WorkshopManuals.co.uk

www.WorkshopManuals.co.uk

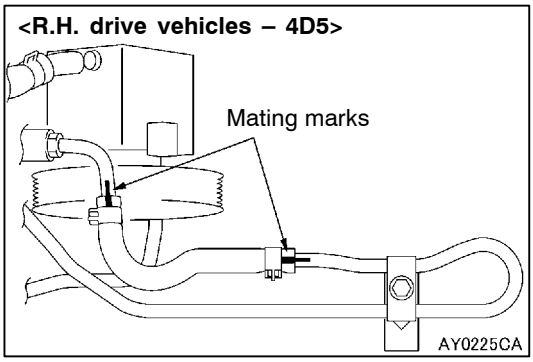


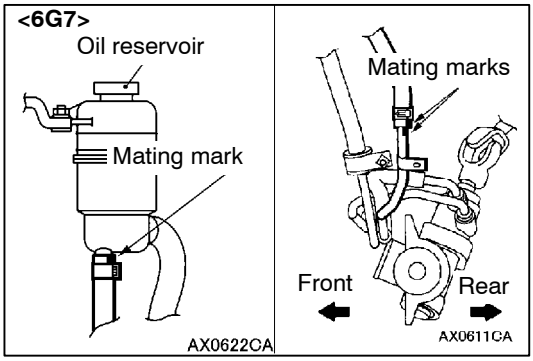


**▶C◀ RETURN HOSE B INSTALLATION**

1. Install so that the mating marks are facing towards the rear <6G7>.

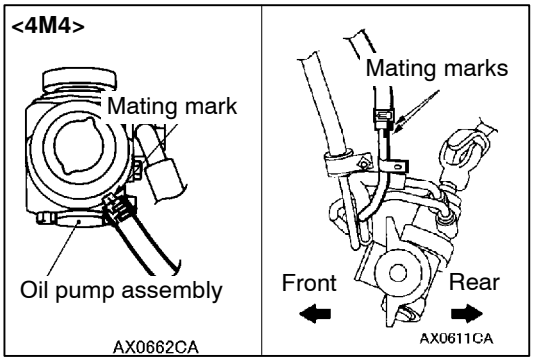


2. Install so that the pump-side mating marks are facing upwards, and the tube-side mating marks are facing towards the rear <4M4>.

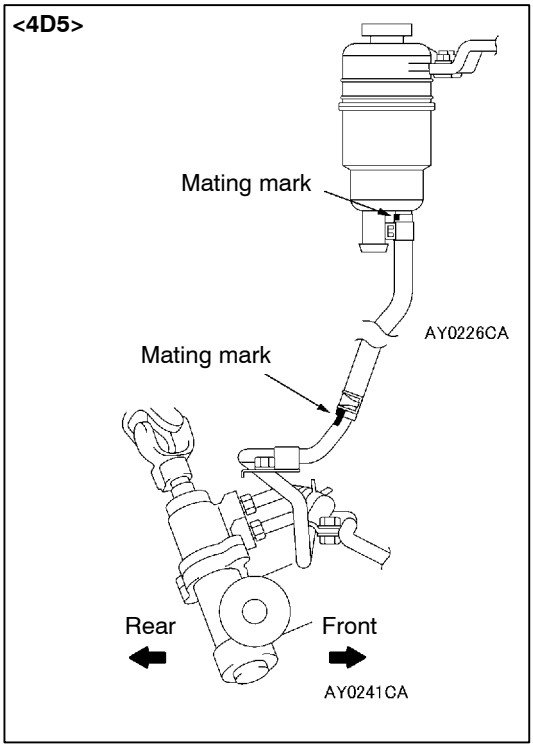


3. Install so that the mating marks are facing towards the rear <4D5>.

Purchased from www.WorkshopManuals.co.uk

www.WorkshopManuals.co.uk

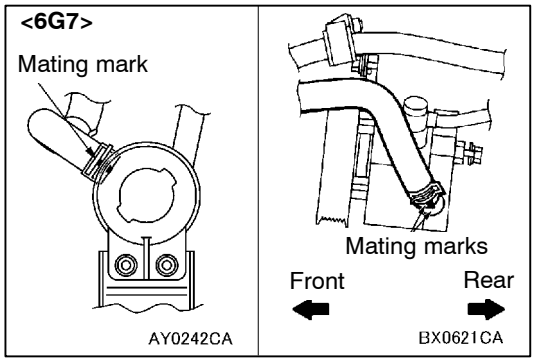


## ▶D◀ SUCTION HOSE INSTALLATION

1. Install so that the reservoir tank-side mating marks are facing upwards, and the pump-side mating marks are facing towards the outside <6G7>.

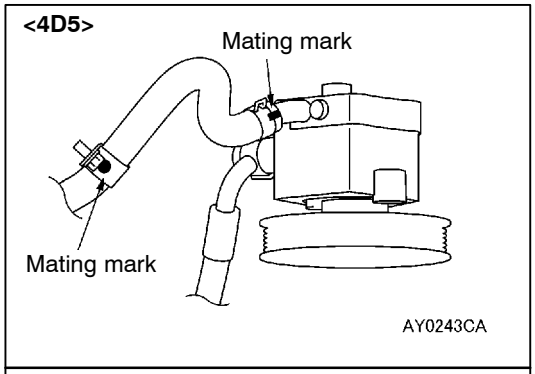


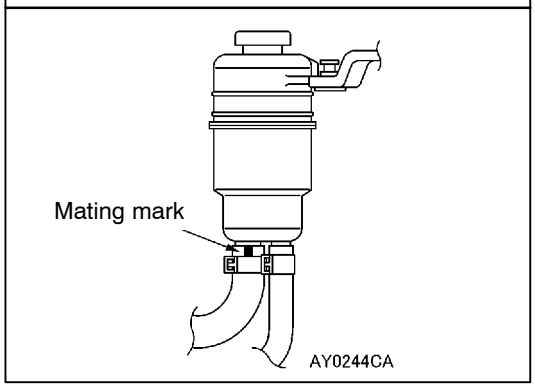


2. Install so that the pump-side mating marks are facing upwards, and the reservoir tank-side mating marks are facing towards the outside <4D5>.

Purchased from www.WorkshopManuals.co.uk

www.WorkshopManuals.co.uk

**NOTES**

Purchased from www.WorkshopManuals.co.uk

www.WorkshopManuals.co.uk

# BODY

**Click on the applicable bookmark to selected the required model year.**

Purchased from www.WorkshopManuals.co.uk

www.WorkshopManuals.co.uk


# BODY

## CONTENTS


HOOD ..... 3

FENDER ..... 5

FUEL FILLER DOOR ..... 6

WINDOW GLASS ..... 8

- ADHESIVES ..... 8
- SPECIAL TOOL ..... 8
- WINDOW REPAIR ..... 8
- WINDSHIELD ..... 10
- QUARTER WINDOW GLASS ..... 14
- BACK DOOR GLASS ..... 16

DOORS ..... 18

- SERVICE SPECIFICATIONS ..... 18
- SEALANT ..... 18
- SPECIAL TOOLS ..... 18
- TROUBLESHOOTING ..... 19
- ON-VEHICLE SERVICE ..... 19
  - Door Fit Adjustment ..... 19
  - Door Window Glass Adjustment ..... 19
  - Defective Power Window Adjustment and Replacement ..... 20
  - Power Window Safety Mechanism Check .. 20
  - Door Outside Handle Play Check ..... 21
  - Power Window Operation Current Check ..... 21
  - Circuit Breaker (Incorporated in the Power Window Motor) Check ..... 21
  - Door Inside Handle Play Check and Adjustment ..... 21
- DOOR ASSEMBLY ..... 22
- DOOR TRIM AND WATERPROOF FILM ..... 24
- DOOR GLASS AND REGULATOR ..... 30
- DOOR HANDLE AND LATCH ..... 33
- WINDOW GLASS RUNCHANNEL AND DOOR OPENING WEATHERSTRIP ..... 36

BACK DOOR ..... 39

- SERVICE SPECIFICATION ..... 39
- SEALANT ..... 39
- SPECIAL TOOL ..... 39
- TROUBLESHOOTING ..... 39


CONTINUED ON NEXT PAGE

Purchased from www.WorkshopManuals.co.uk

www.WorkshopManuals.co.uk

**ON-VEHICLE SERVICE** ..... **40**
Back Door Fit Adjustment ..... 40
Back Door Handle Play Check ..... 40

**BACK DOOR ASSEMBLY** ..... **41**

**BACK DOOR TRIM AND WATERPROOF FILM** ..... **43**

**BACK DOOR HANDLE AND LATCH** .... **44**

**KEYLESS ENTRY SYSTEM** ..... **45**

**TROUBLESHOOTING** ..... **45**

**ON-VEHICLE SERVICE** ..... **45**
How to Replace a Battery of the Transmitter ..... 45
Encrypted Code Registration Method .. 45

**KEYLESS ENTRY SYSTEM** ..... **46**

**SUNROOF** ..... **47**

**SERVICE SPECIFICATION** ..... **47**

**TROUBLESHOOTING** ..... **47**

**ON-VEHICLE SERVICE** ..... **47**
Water Test ..... 47
Sunroof Fit Adjustment ..... 47

**SUNROOF** ..... **48**

Purchased from www.WorkshopManuals.co.uk

www.WorkshopManuals.co.uk

# HOOD

## REMOVAL AND INSTALLATION

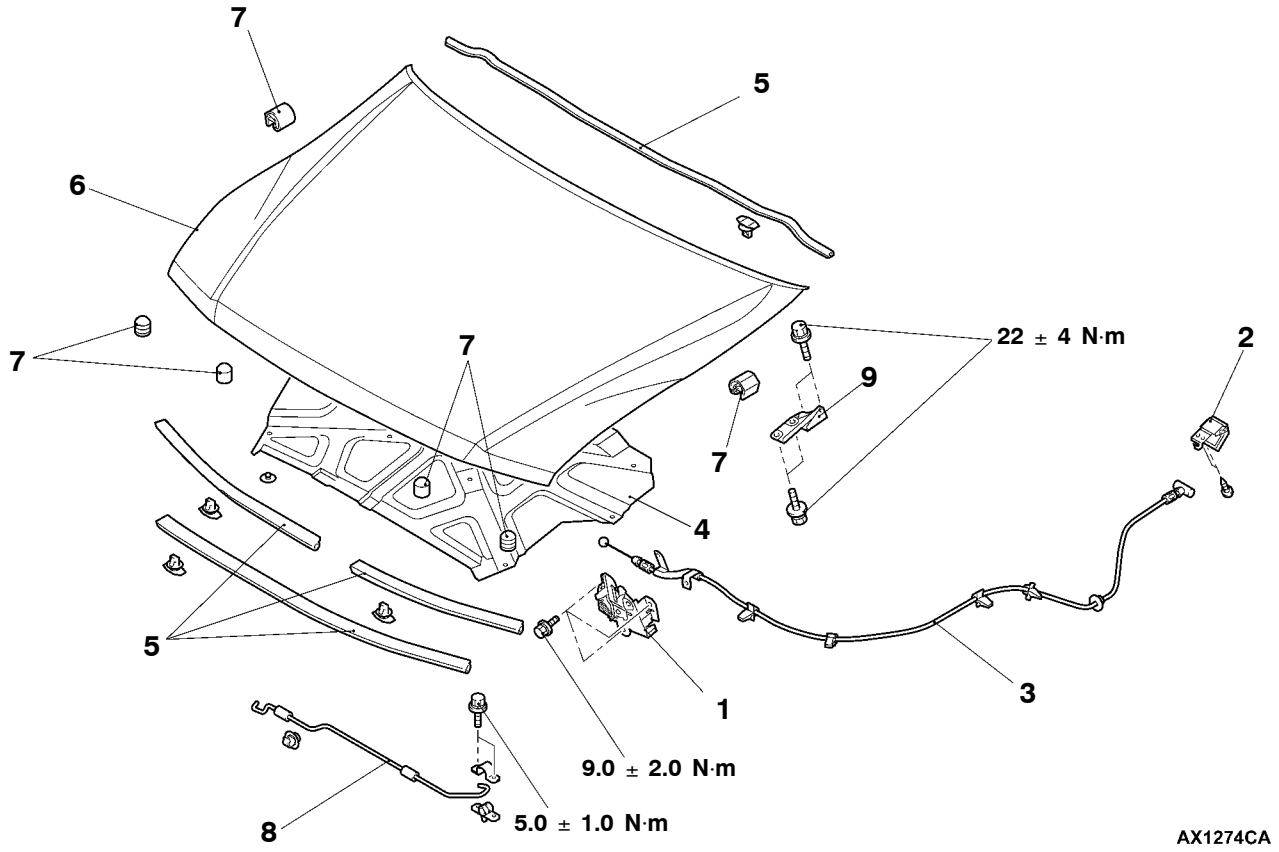


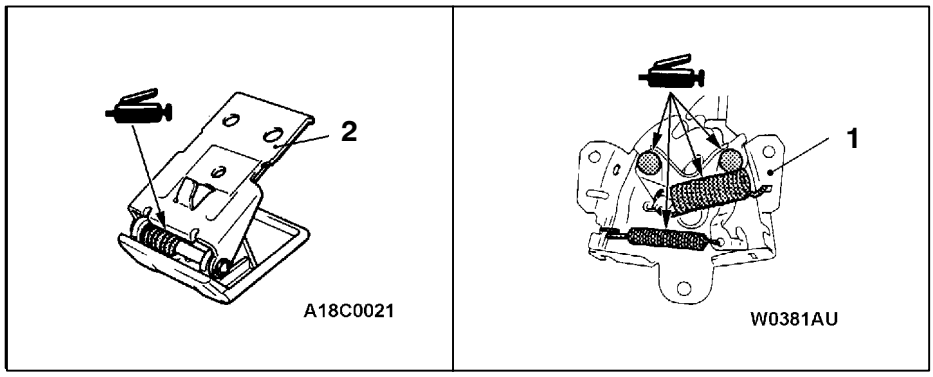


**Hood latch removal steps**

- Front grille (Refer to GROUP 51.)

1. Hood latch

**Hood lock release cable removal steps**

2. Hood lock release handle
3. Hood lock release cable

**Hood removal steps**

4. Hood silencer
5. Hood weatherstrip
   - Washer hose (Refer to GROUP 51.)
6. Hood
7. Hood bumper
8. Hood support rod (Refer to GROUP 51.)
9. Hood support rod (Refer to GROUP 51.)

Purchased from www.WorkshopManuals.co.uk

www.WorkshopManuals.co.uk

**Adjustment of clearance around hood**

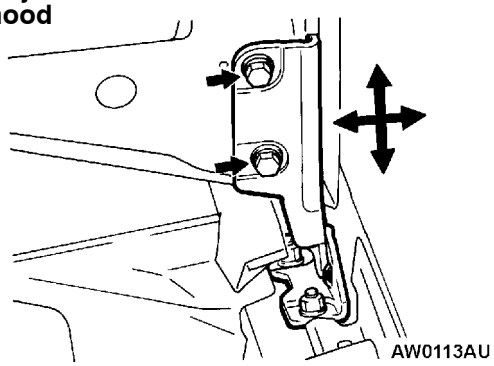


**Adjustment of hood height**

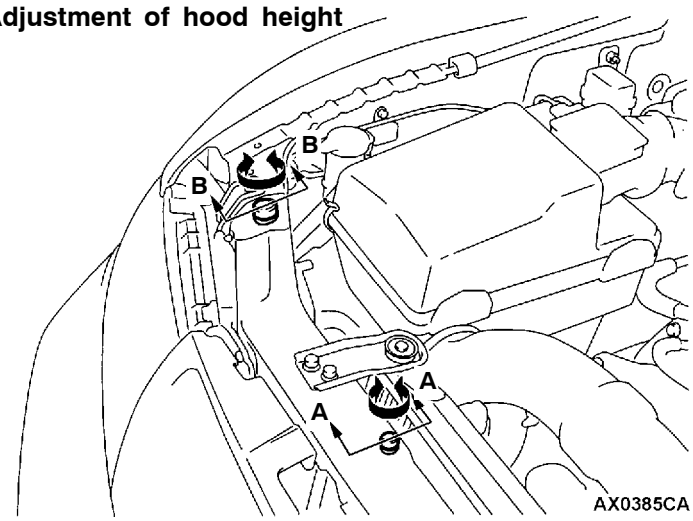


**Adjustment of hood step and hood striker linkage**

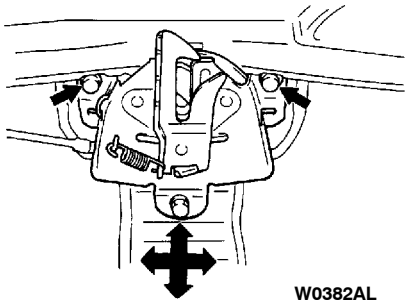


**Section A - A**

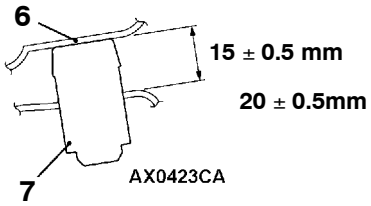


**Section B - B**

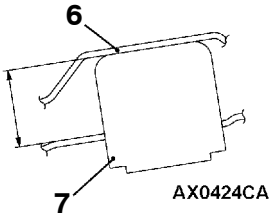


**Clip positions**

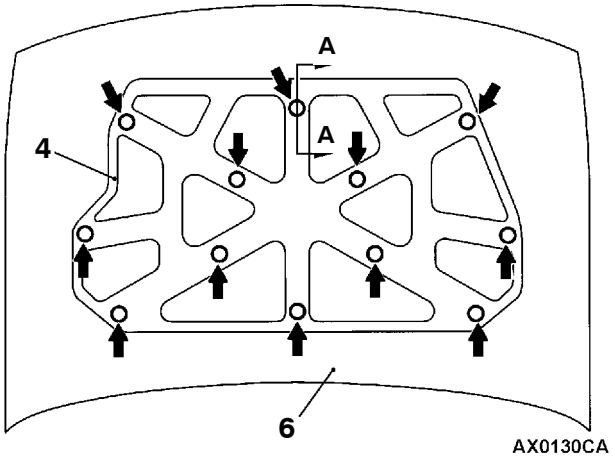


**Section A - A**

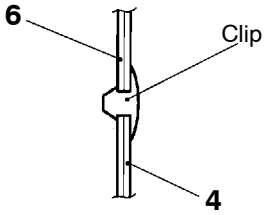


⬅ : Clip positions

Purchased from www.WorkshopManuals.co.uk

www.WorkshopManuals.co.uk

# FENDER

## REMOVAL AND INSTALLATION

**Caution: SRS**
**Do not strike the front impact sensor when removing or installing the fender.**

**Pre-removal and Post-installation Operation**
- Front Bumper Removal and Installation (Refer to GROUP 51.)
- Front Mud Guard Removal and Installation (Refer to GROUP 51.)
- Overfender Removal and Installation (Refer to GROUP 51.)

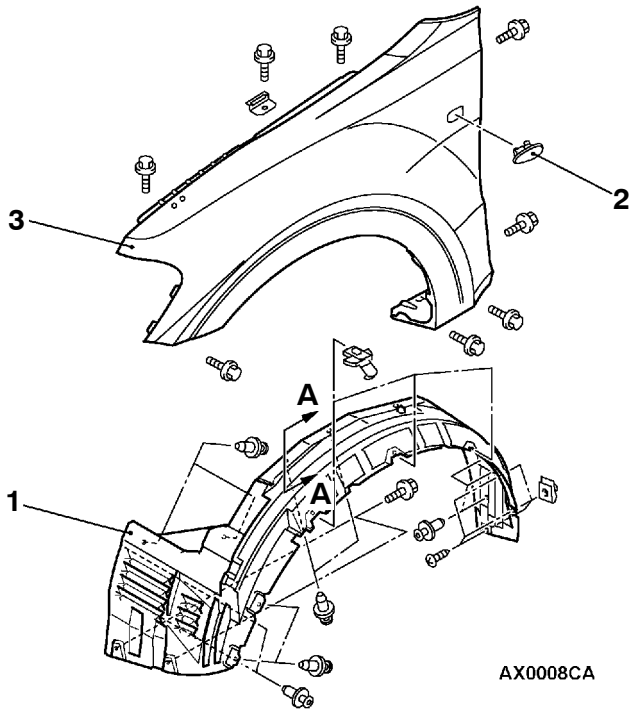


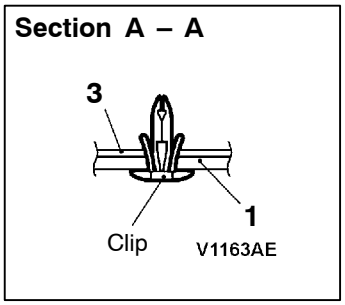


**Removal steps**
1. Splash shield
◀A▶ ▶A◀ 2. Side turn signal lamp
3. Fender

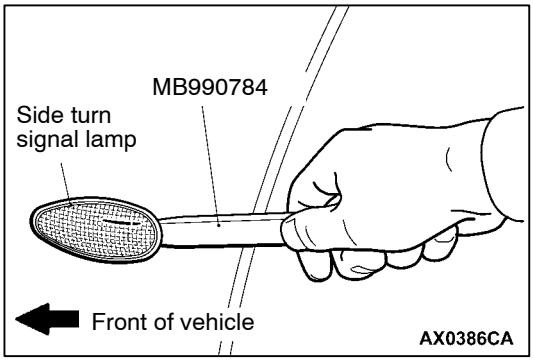


## REMOVAL SERVICE POINT

### ◀A▶ SIDE TURN SIGNAL LAMP REMOVAL

Use the special tool to unhook the fender, and then remove the side turn-signal lamp.

Purchased from www.WorkshopManuals.co.uk

www.WorkshopManuals.co.uk

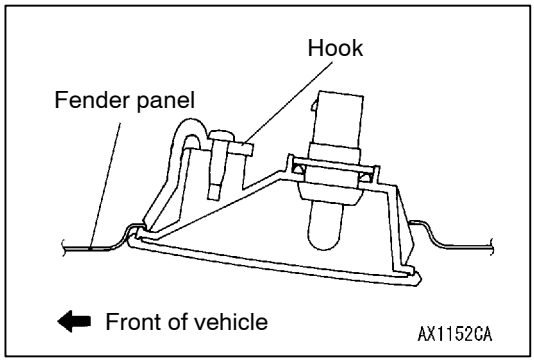


## INSTALLATION SERVICE POINT

### ▶A◀ SIDE TURN SIGNAL LAMP INSTALLATION

Engage the hook into the fender panel, and then install the side turn signal lamp.

# FUEL FILLER DOOR

## REMOVAL AND INSTALLATION

**Pre-removal and Post-installation Operations**
- Quarter Trim, Lower (R.H.) Removal and Installation (Refer to GROUP 52A.)
- Center Pillar Trim, Lower (Long Wheelbase - R.H.) Removal and Installation (Refer to GROUP 52A.)

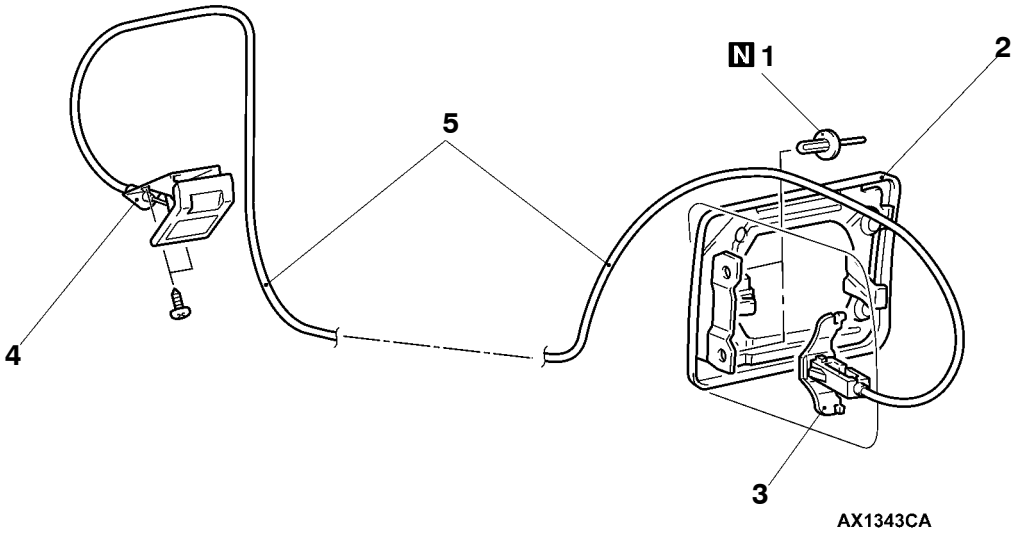


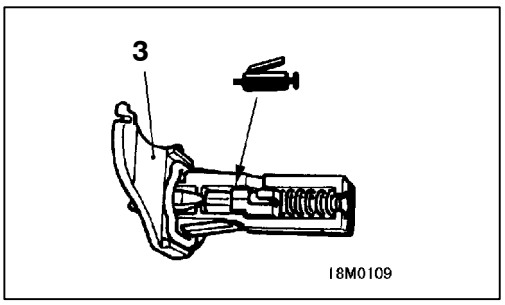


**Removal steps**

◀A▶ ▶A◀ 1. Rivet
2. Fuel filler door panel assembly
3. Fuel filler door lock hook assembly
4. Lid lock release handle
- Heater deck cross assembly (Refer to GROUP 55.)
- AC inverter (Long wheelbase) (Refer to GROUP 54.)

5. Fuel filler door lock release cable

Purchased from www.WorkshopManuals.co.uk

www.WorkshopManuals.co.uk

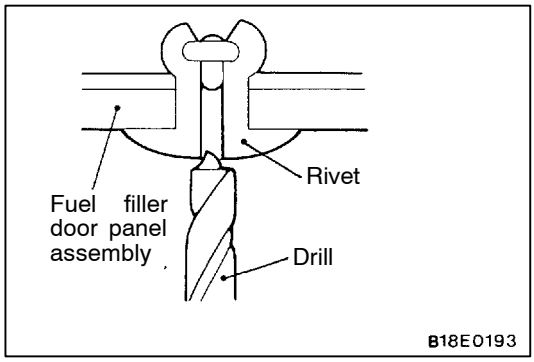


## REMOVAL SERVICE POINT

### ◀A▶ RIVET REMOVAL

Use a drill (Ø6.5 - 7.5 mm) to break the rivet by drilling a hole, and then remove the rivet.

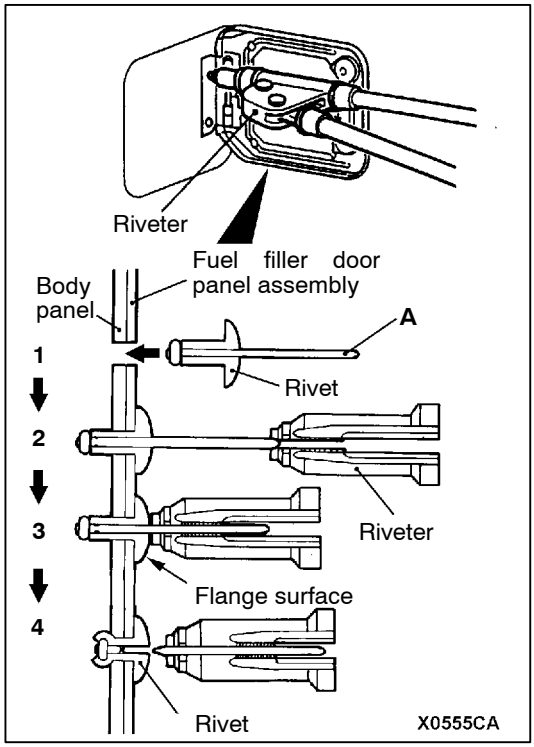


## INSTALLATION SERVICE POINT

### ▶A◀ RIVET INSTALLATION

Use a riveter shown to install rivets as follows:

1. Insert a rivet in the body panel and fuel filler door panel assembly.
2. Insert the riveter to the rod (A shown) of a rivet.
3. Pressing the flange surface of the rivet with the riveter, handle the riveter.
4. The rod is cut at its thinnest point and the rivet is held in position.

Purchased from www.WorkshopManuals.co.uk

www.WorkshopManuals.co.uk

# WINDOW GLASS

## ADHESIVE

| Items | Specified adhesive |
|---|---|
| Windshield | 3M ATD Part No. 8609 Super Fast Urethane Auto Glass Sealant or equivalent |
| Quarter window glass | |
| Back door glass | |
| Quarter window garnish | 3M ATD Part No. 8513 Grommeted Windshield Sealant or equivalent |

## SPECIAL TOOL

| Tool | Number | Name | Use |
|---|---|---|---|
| 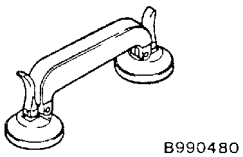  | MB990480 | Window glass holder | Removal and installation of windshield |

## WINDOW REPAIR

The following glass parts are installed with a liquid urethane adhesive method:

- Windshield
- Quarter window glass
- Back door window glass

### ITEMS NEEDED

| Name | Remarks |
|---|---|
| Adhesive | 3M ATD Part No. 8609 Super Fast Urethane Auto Glass Sealant or equivalent |
| Primer | 3M ATD Part No. 8608 Super Fast Urethane Primer or equivalent |
| Spacers | Available as service part |
| Dam | Available as service part |
| Anti-rust solvent (or Tectyl 506T...Valvoline Oil Company) | For rust prevention |
| Isopropyl alcohol | For grease removal from bonded surface |
| Steel piano wire | Dia. × length...0.6mm × 1m For cutting adhesive |
| Adhesive gun | For pressing-out adhesive |

Purchased from www.WorkshopManuals.co.uk

www.WorkshopManuals.co.uk


### HANDLING OF AUTO WINDOW SEALER

Keep the sealant in a cool place, not exposed to the direct rays of the sun. Do not place any heavy article on the sealant nor press it, otherwise it will become deformed. Avoid storing the sealant for more than 6 months, because it will lose its sealing effect.

### BODY PINCH-WELD FLANGE SERVICING

Before servicing the body pinch-weld flange, remove old adhesive completely. If the flange requires painting, bake it after painting is completed.

## WORKING PROCESS

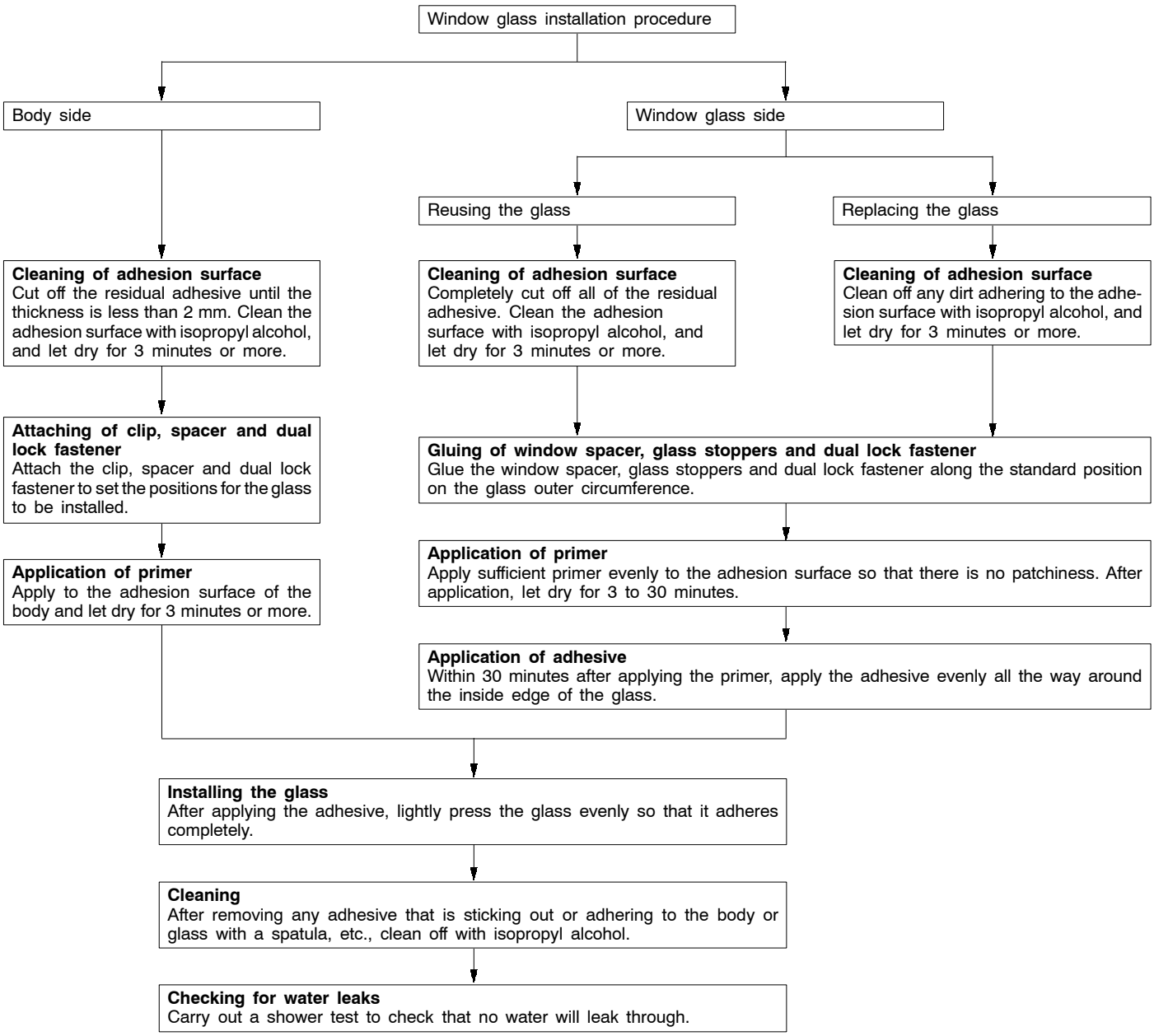


Purchased from www.WorkshopManuals.co.uk

www.WorkshopManuals.co.uk

# WINDSHIELD

## REMOVAL AND INSTALLATION

**Pre-removal and Post-installation Operations**
- Deck Garnish Removal and Installation (Refer to GROUP 51A.)
- Headlining Removal and Installation
- Front Pillar Trim Removal and Installation (Refer to GROUP 52A – Trim.)

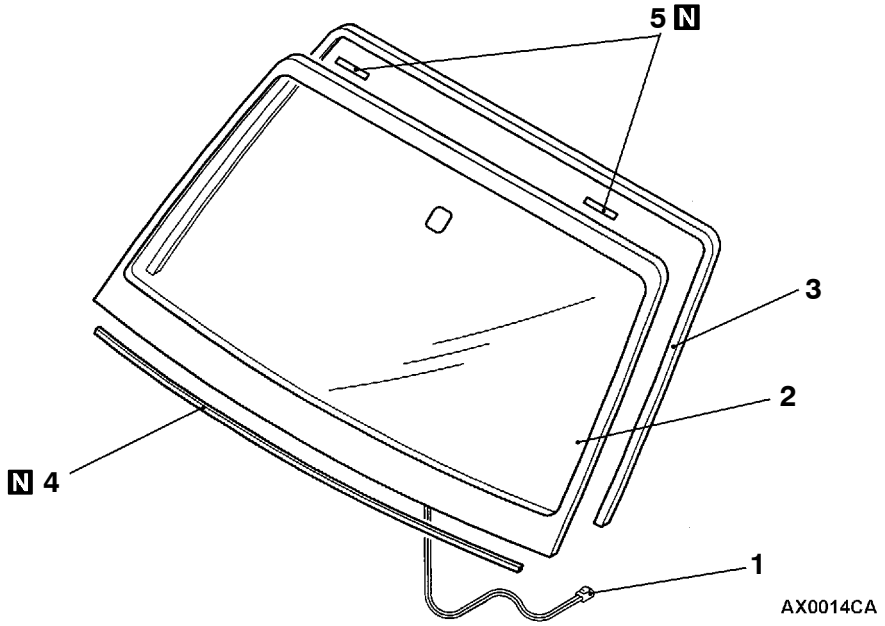


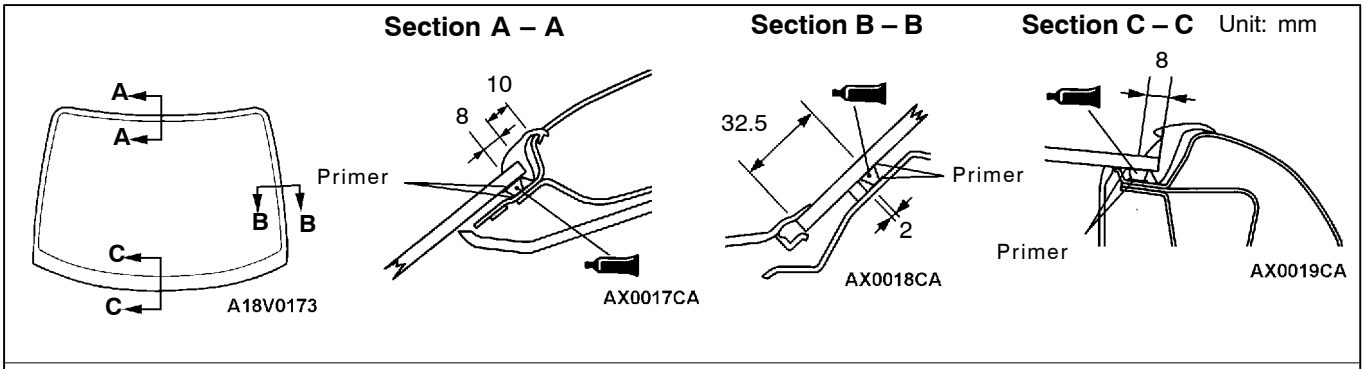


**Adhesive: 3M ATD Part No. 8609 Super Fast Urethane Auto Glass Sealant or equivalent**

**Removal steps**

1. Wiper deicer connector (Refer to GROUP 51.)
◀A▶ ▶A◀ 2. Windshield
▶A◀ 3. Windshield moulding
▶A◀ 4. Windshield spacer
▶A◀ 5. Glass stopper

Purchased from www.WorkshopManuals.co.uk

www.WorkshopManuals.co.uk

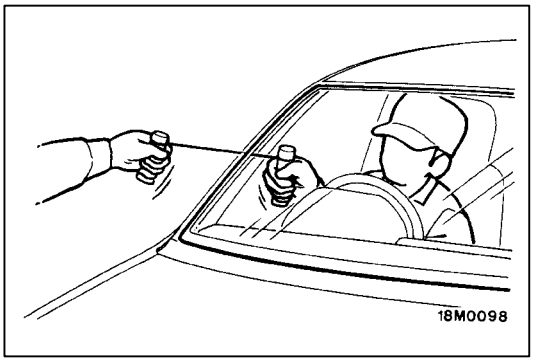


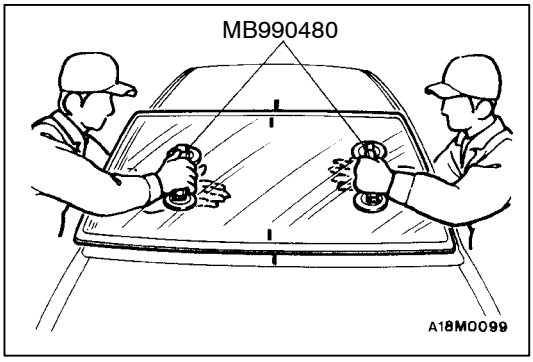


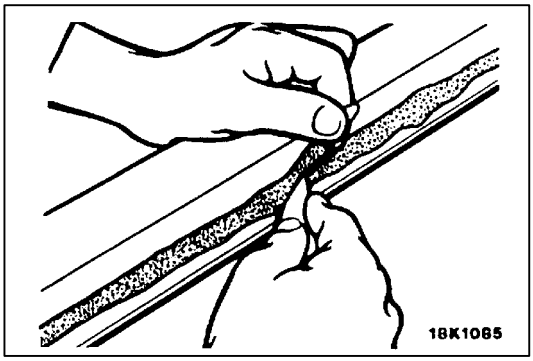


## REMOVAL SERVICE POINT

### ◀A▶ WINDSHIELD REMOVAL

1. In order to protect the body (paint surface), apply cloth tape to all body areas around the installed windshield.
2. Using a sharp-point drill, make hole in the windshield adhesive.
3. Pass the piano wire from the inside of the vehicle through the hole.
4. Pull the piano wire alternately from the inside and outside along the windshield to cut the adhesive.

   **Caution**
   **Do not let the piano wire touch the edge of the windshield.**
5. Make alignment marks on the windshield and body.
6. Use the special tool to remove the windshield.
7. Use a knife to cut away remaining adhesive to 2 mm thick or less around the entire circumference of the body flange.
8. Smooth the flange surface.

   **Caution**
   **(1) Use care not to remove more adhesive than necessary, or the adhesive could weaken.**
   **(2) Be careful also not to damage the paintwork on the body surface with the knife. If the paintwork is damaged, repair the damaged area with repair paint or anti-rust agent.**
9. When reusing windshield, remove the remaining adhesive on the windshield completely. Then, decrease the windshield with isopropyl alcohol.
10. Decrease the body flange in the same way.

    **Caution**
    **Before the next job, leave the decreased parts for 3 minutes or more to dry. Also, do not touch any cleaned surface.**

Purchased from www.WorkshopManuals.co.uk

www.WorkshopManuals.co.uk

## INSTALLATION SERVICE POINT

### ▶A◀GLASS STOPPER/WINDSHIELD MOULDING/WINDSHIELD SPACER/WINDSHIELD INSTALLATION

1. When replacing the windshield, first align it with the body, and then matchmark them.
2. Use isopropyl alcohol to clean the inside edge of the windshield and the body flange.
3. Use a primer dampened sponge to apply the clear gasoline to the specified area around the windshield and the body evenly.
4. After the application, let it dry for at least three minutes.
5. Position the glass stopper and the windshield spacer as shown, ensuring that there are no bends or warpages inside the windshield.

**Glass stopper and spacer installation position**

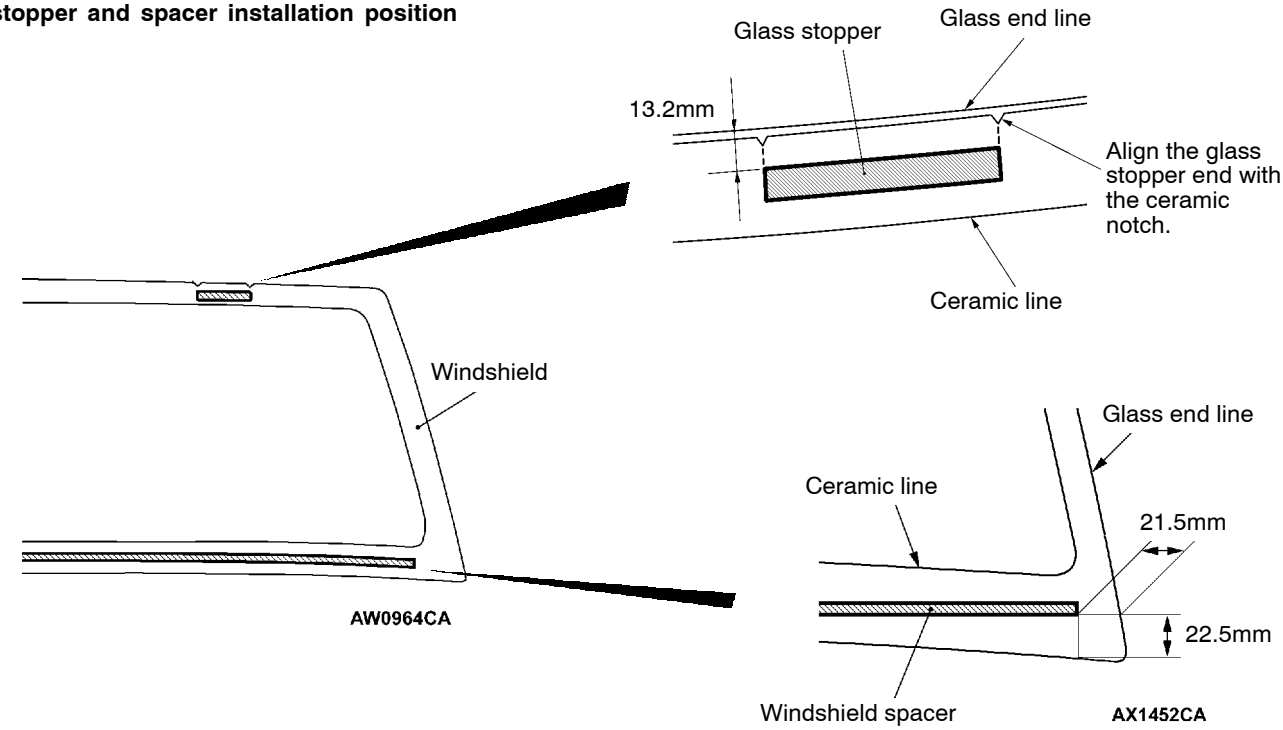


**Caution**

**(1) The primer strengthens the adhesive, so be sure to apply it evenly around the entire circumference. However, a too thick application will weaken the adhesive.**

**(2) Never touch the primer-applied surface.**

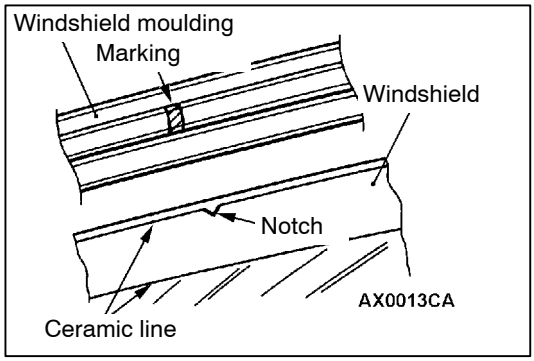


6. Align the marking on the windshield moulding with the windshield notch, and then install the windshield moulding.

Purchased from www.WorkshopManuals.co.uk

www.WorkshopManuals.co.uk

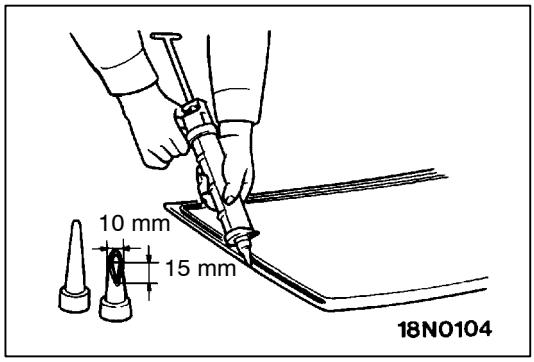


7. Within thirty minutes after the primer application, fill a sealant gun with adhesive, and then apply the adhesive evenly around the windshield.

   NOTE
   Cut the tip of the sealant gun nozzle into a V shape to simplify adhesive application.
8. Align the mating marks on the windshield and the body, and lightly press the windshield evenly so that it adheres completely.
9. Use a spatula or the like to remove any excessive adhesive. Install the windshield moulding before the adhesive sets. After the windshield is installed, wait until the adhesive sets.(Refer to P.42-9.)
10. Wait thirty minutes or more, and then test for water leakage.

    **Caution**
    **(1) Do not move the vehicle unless absolutely necessary.**
    **(2) When testing for water leakage, do not pinch the end of the hose to spray the water.**

Purchased from www.WorkshopManuals.co.uk

www.WorkshopManuals.co.uk

# QUARTER WINDOW GLASS

## REMOVAL AND INSTALLATION

**Pre-removal and Post-installation Operation**
Quarter Trim, Upper Removal and Installation
(Refer to GROUP 52A.)

<Short wheelbase>

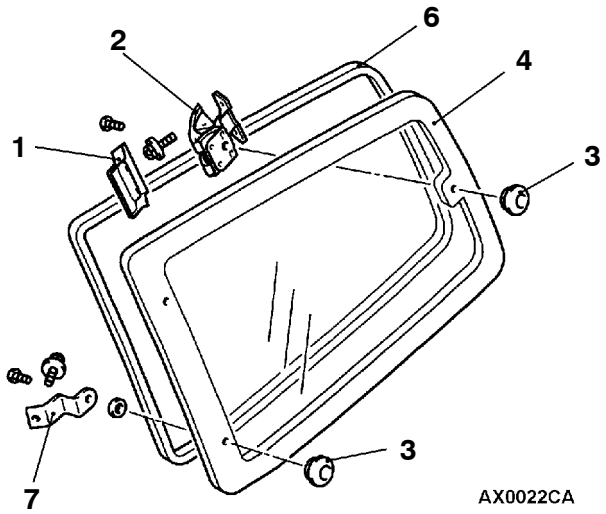


<Long wheelbase>

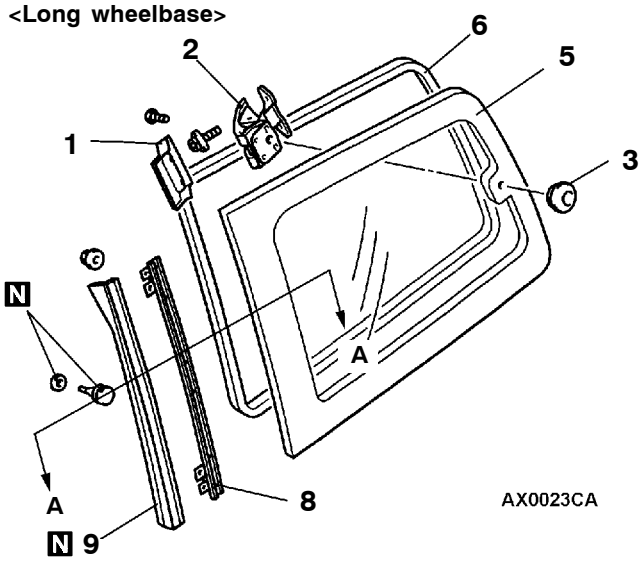


**Section A – A**

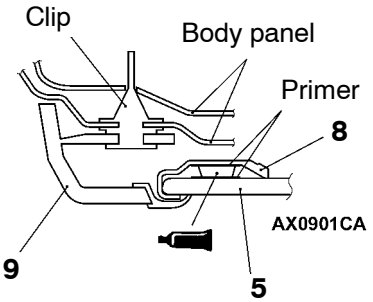


**Adhesive: 3M ATD Part No. 8513 Grommeted Windshield Sealant or equivalent**

**Removal steps**

1. Lever
2. Quarter window link
3. Rubber and nut
4. Quarter window glass
5. Quarter window glass ◀A▶
6. Quarter window weatherstrip
7. Quarter window hinge ◀A▶ ▶A◀
8. Quarter window moulding
9. Quarter window garnish

Purchased from www.WorkshopManuals.co.uk

www.WorkshopManuals.co.uk

## REMOVAL SERVICE POINT

### ◀A▶ QUARTER WINDOW GLASS/QUARTER WINDOW MOULDING REMOVAL

Remove by the same procedure as for the windshield. (Refer to P.42-11.)

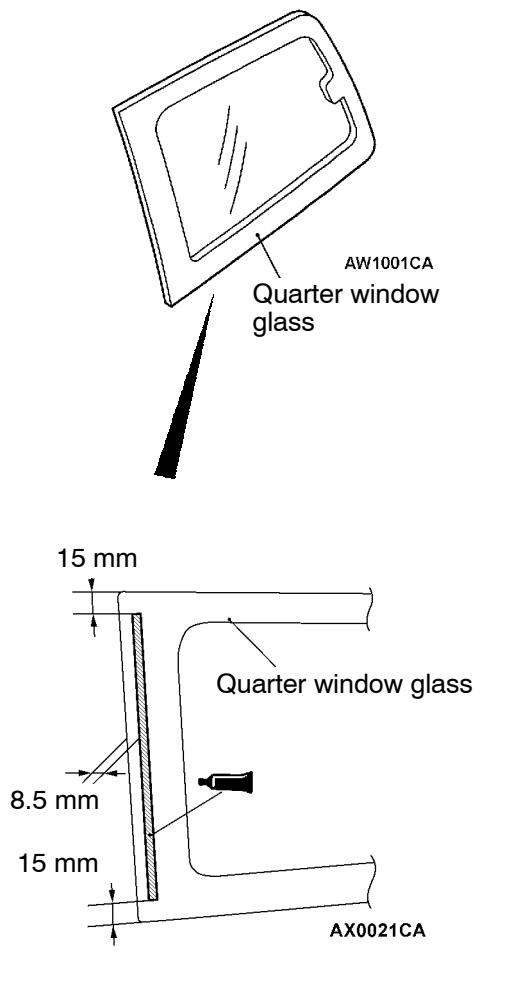


**Adhesive: 3M ATD Part No. 8513 Grommeted Windshield Sealant or equivalent**

## INSTALLATION SERVICE POINT

### ▶A◀ QUARTER WINDOW MOULDING INSTALLATION

1. Wipe away all adhesive which is adhering to the channel in the quarter window moulding and to the quarter window glass, and then clean the surfaces with unleaded petrol.

   **Caution**
   **The areas which have been cleaned of adhesive should be allowed to stand for three minutes or more until they are completely dry before continuing to the next step. Furthermore, do not touch the surfaces after they have been cleaned.**
2. Apply an even coating of primer to the adhesion surface of the quarter window glass, while being careful not to miss any places.
3. Apply the specified sealant to the quarter window glass in the locations specified, and then install the quarter window moulding to the quarter window glass.

   **Adhesive:**
   **3M ATD part No.8513 Grommeted Sealant or equivalent**

Purchased from www.WorkshopManuals.co.uk

www.WorkshopManuals.co.uk

# BACK DOOR GLASS

## REMOVAL AND INSTALLATION

**Pre-removal and Post-installation Operations**
- Back Door Upper Trim Removal and Installation (Refer to P.42-43.)
- Spare Tire Removal and Installation

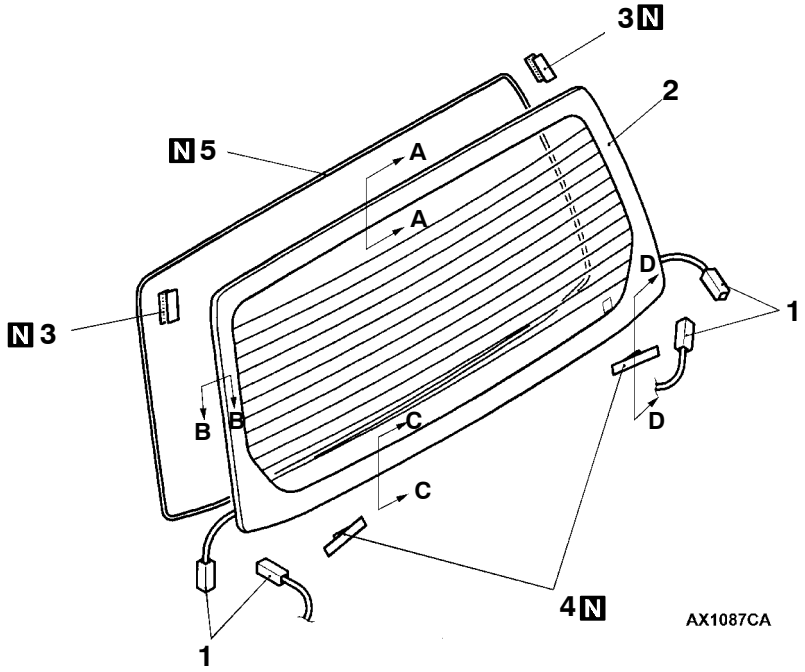


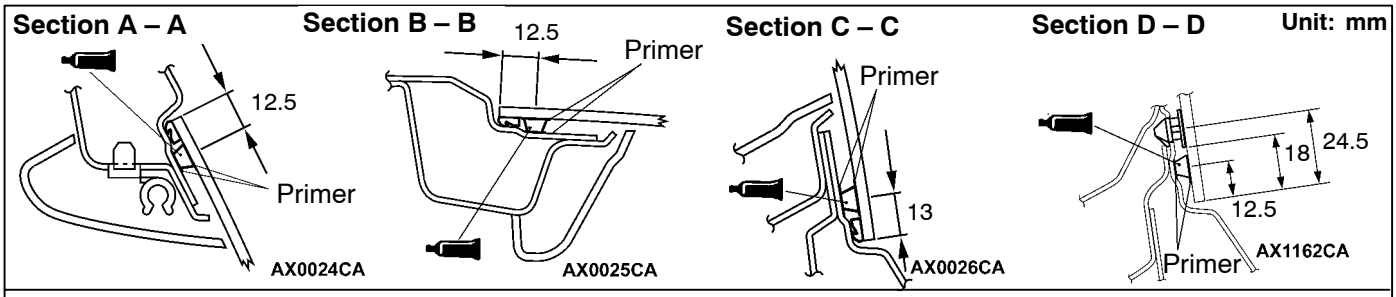


**Adhesive: 3M ATD Part No. 8609 Super Fast Urethane Auto Glass Sealant or equivalent**

**Removal steps**

1. Harness connector
◀A▶ ▶A◀ 2. Back door glass
▶A◀ 3. Dual lock fastener
▶A◀ 4. Glass stopper
▶A◀ 5. Window dam

## REMOVAL SERVICE POINT

### ◀A▶ BACK DOOR GLASS REMOVAL

Remove the back door glass in the same manner as for the windshield. (Refer to P42-11.)

Purchased from www.WorkshopManuals.co.uk

www.WorkshopManuals.co.uk

## INSTALLATION SERVICE POINT

### ▶A◀WINDOW DAM/GLASS STOPPER/DUAL LOCK FASTENER/BACK DOOR GLASS INSTALLATION

1. Clean both the glass side and vehicle body side of the window dam, dual lock fastener and glass stopper mounting surfaces with unleaded petrol.
2. Install the window dam.

**Window dam installation position**

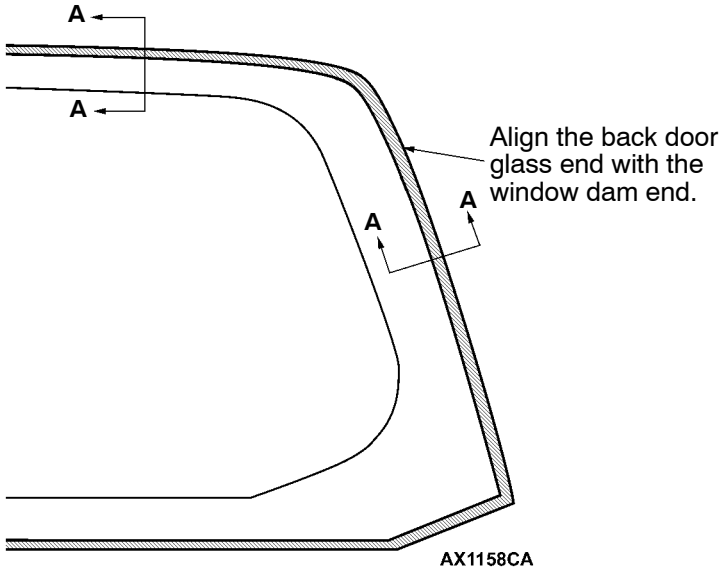


**Section A – A**

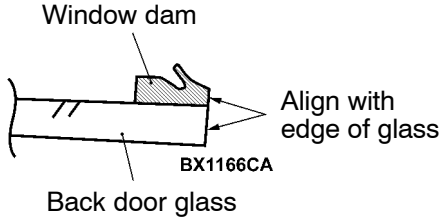


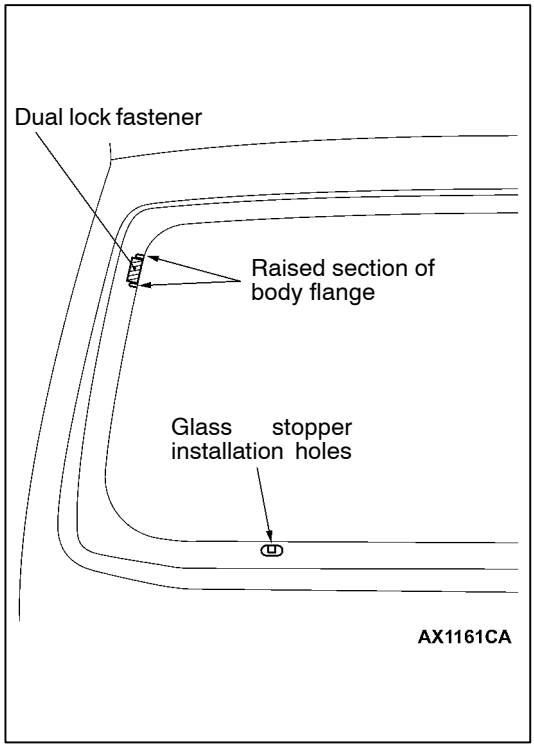


3. Attach the dual lock fastener to the body flange in the correct position.
4. Attach the dual lock fastener and glass stopper to the back door window glass in the positions which correspond to the dual lock fastener and glass stopper mounting sections of the body flange.
5. Apply the primer and adhesive.
6. Install the glass by the same procedure as for the windshield. (Refer to P.42-12.)

Purchased from www.WorkshopManuals.co.uk

www.WorkshopManuals.co.uk

# DOORS

## SERVICE SPECIFICATIONS

| Items | Standard value |
|---|---|
| Door outside handle play mm | 2.0 or more |
| Power window operating current A | 5.0 ± 2 (power supply 14.5 ± 0.3 V at 23°C) |
| Door inside handle play mm | 5.3 or more |

## SEALANT

| Items | Specified sealant | Remark |
|---|---|---|
| Waterproof film | 3M ATD Part No. 8625 or equivalent | Ribbon sealer |

## SPECIAL TOOLS

| Tool | Number | Name | Use |
|---|---|---|---|
| 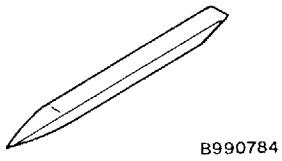 B990784 | MB990784 | Ornament remover | Door trim removal |
| 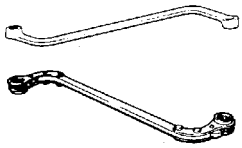 00003936 | MB990900 or MB991164 | Door hinge adjusting wrench | Adjustment of door fit |
| A 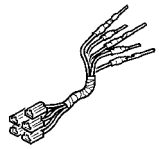 B 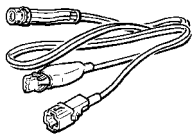 C D C991223 | MB991223<br>A: MB991219<br>B: MB991220<br>C: MB991221<br>D: MB991222 | Harness set<br>A: Test harness<br>B: LED harness<br>C: LED harness adapter<br>D: Probe | Terminal voltage measurement<br>A: Connector pin contact pressure check<br>B: Power circuit check<br>C: Power circuit check<br>D: Commercial tester connection |

Purchased from www.WorkshopManuals.co.uk

www.WorkshopManuals.co.uk

# TROUBLESHOOTING

## DIAGNOSIS FUNCTION

The power window and central door locking is controlled by the Smart Wiring System (SWS). For troubleshooting, refer to GROUP 54B - Troubleshooting.

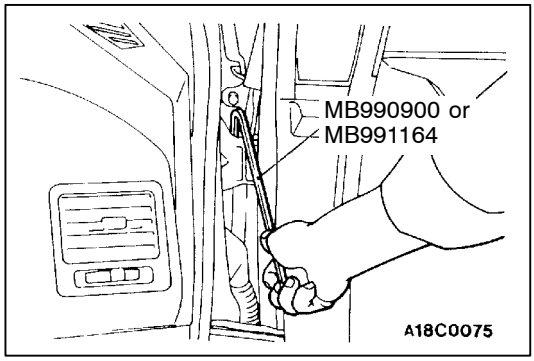


# ON-VEHICLE SERVICE

## DOOR FIT ADJUSTMENT

1. If clearance between the door and body is uneven, affix protective tape to the fender around the hinge and to the edge of the door. Then use the special tool to loosen the door hinge mounting bolts on the body, and adjust the clearance around the door so that it becomes even.
2. If the door and body are not flush with each other, use the special tool to loosen the door hinge mounting bolts on the door. Then align the door.

   **Caution**
   **Do not load more than 98 N·m on the special tool.**

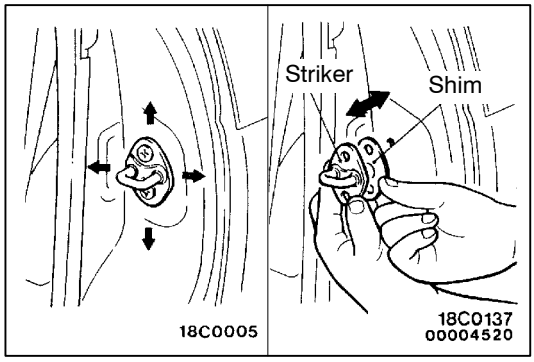


3. If the door opening and closing is heavy, adjust the meshing of the striker and the door latch (forward and backward) by adding shims to the striker and by moving the striker up and down or to the left and right.

## DOOR WINDOW GLASS ADJUSTMENT

Check that the door glass operates smoothly and moves along the door glass runchannel when the door window glass is fully raised and fully lowered. If there is a problem, adjust by the following procedure.

1. Remove the door trim and waterproof film. (Refer to P.42-24.)

Purchased from www.WorkshopManuals.co.uk

www.WorkshopManuals.co.uk

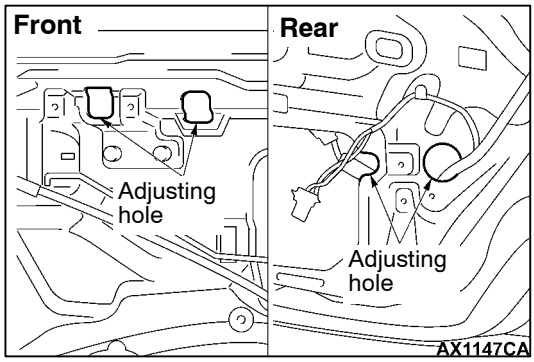


2. With the door window glass fully closed, loosen the door glass mounting screws through the adjusting holes, and then lower the door window glass slightly.
3. Fully close the door window glass again, and then fully tighten the door glass mounting screws through the adjusting holes.

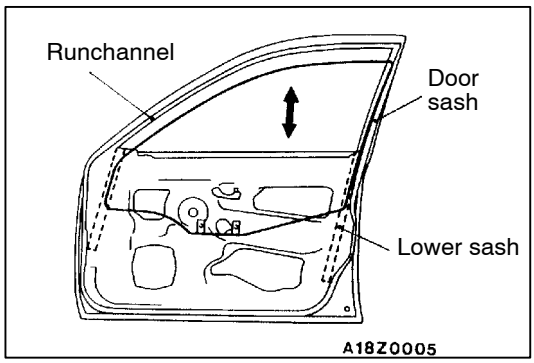


## DEFECTIVE POWER WINDOW ADJUSTMENT AND REPLACEMENT

If the window glass wrongly, automatically lowers while being raised, adjust or replace as follows:

1. Remove the door trim and the waterproof film. (Refer to P.42-24.)
2. Remove the window regulator assembly from the door window glass, and then raise and lower the door window glass by hand to check the operation force.

   NOTE
   Insert soft stuff like cushion to prevent damage to the glass if it falls down.
3. If the door window glass does not move up and down smoothly, do as follows:
   - Check the installation condition of the runchannel.
   - Straighten twist in the door sash.
   - Check the installation condition of the lower sash or the center sash.

   NOTE
   The lower sash cannot normally be adjusted, but it may be possible to adjust the sash span slightly within the range allowed by manufacturing tolerances by pushing the lower sash outwards while re-installing it.
4. If repair or adjustment is impossible, replace the door assembly.

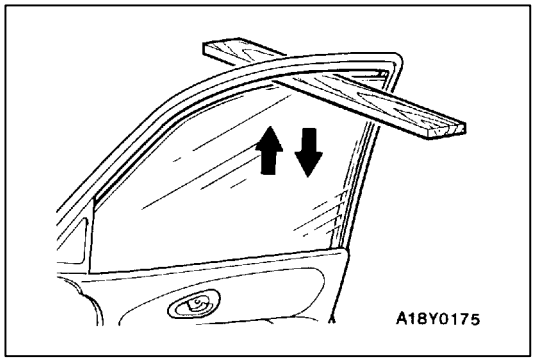


## POWER WINDOW SAFETY MECHANISM CHECK

1. Place a wooden board about 10 mm thick as shown. Then, raise the window glass.
2. Check that the window lowers by about 150 mm when the window clamps the board. If this doesn't happen, do troubleshooting. (Refer to P.42-19.)

Purchased from www.WorkshopManuals.co.uk

www.WorkshopManuals.co.uk

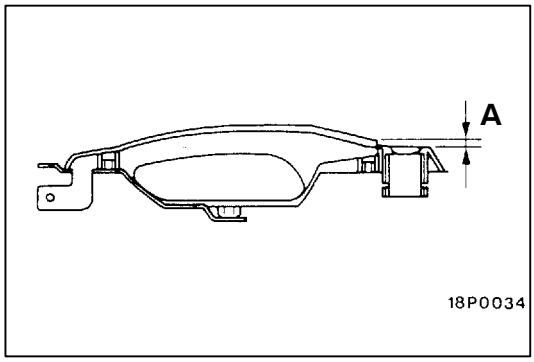


## DOOR OUTSIDE HANDLE PLAY CHECK

1. Check that the door outer handle play is at the standard value.

   **Standard value (A):**
   **Front 2.0 mm or less**
   **Rear 1.7 mm or less**

2. Check the door outside handle and door latch assembly, and replace the assembly if there is a malfunction.

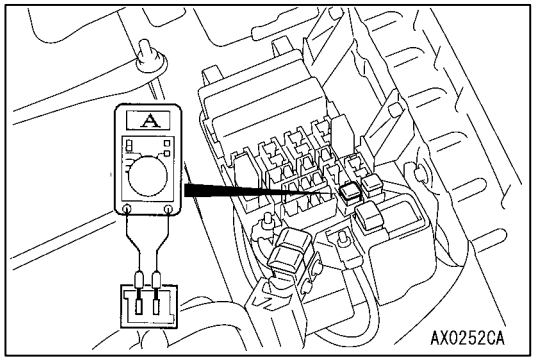


## POWER WINDOW OPERATION CURRENT CHECK

1. Remove the power window fuse, and connect a multimeter as shown in the illustration.
2. When the power window switch is pressed to the UP side, a large amount of operating current flows when the window starts and stops moving, so measure the current during the period between these two extremes.

   **Standard value:**
   **5.0 ± 2 A (Power supply voltage 14.5 ± 0.3 V, at 23°C)**

3. If the current is outside the standard value, refer to Troubleshooting (Refer to P.42-19.)

## CIRCUIT BREAKER (INCORPORATED IN THE POWER WINDOW MOTOR) CHECK

1. Turn the power window switch to UP to close the window glass. Keep the switch at the fully-closed position for another 10 seconds.
2. Release the power window switch and immediately turn it to DOWN. Under this condition if the window glass starts to lower within 60 seconds, the circuit breaker can be judged good.

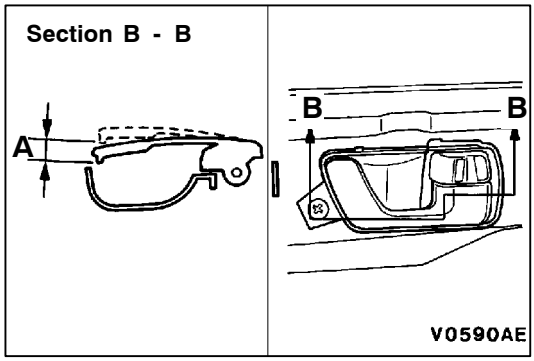


## DOOR INSIDE HANDLE PLAY CHECK AND ADJUSTMENT

1. Check that the door inside handle play is at the standard value.

   **Standard value (A): 5.3 mm or less**

2. If the play is outside the standard value, remove the door trim. (Refer to P.42-24.)
3. Adjust the door inside handle play by using the clip which connects the door inside handle and the rod.

Purchased from www.WorkshopManuals.co.uk

www.WorkshopManuals.co.uk

# DOOR ASSEMBLY

## REMOVAL AND INSTALLATION

**Post-installation Operation**
Door Fit Adjustment (Refer to P.42-19.)

### FRONT DOOR

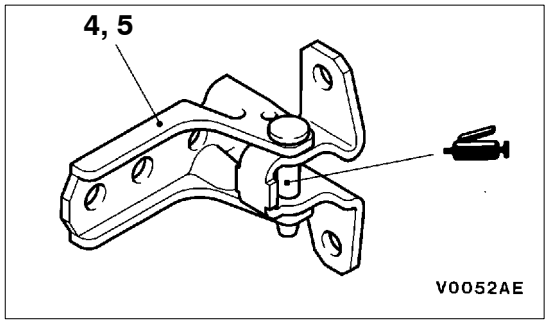


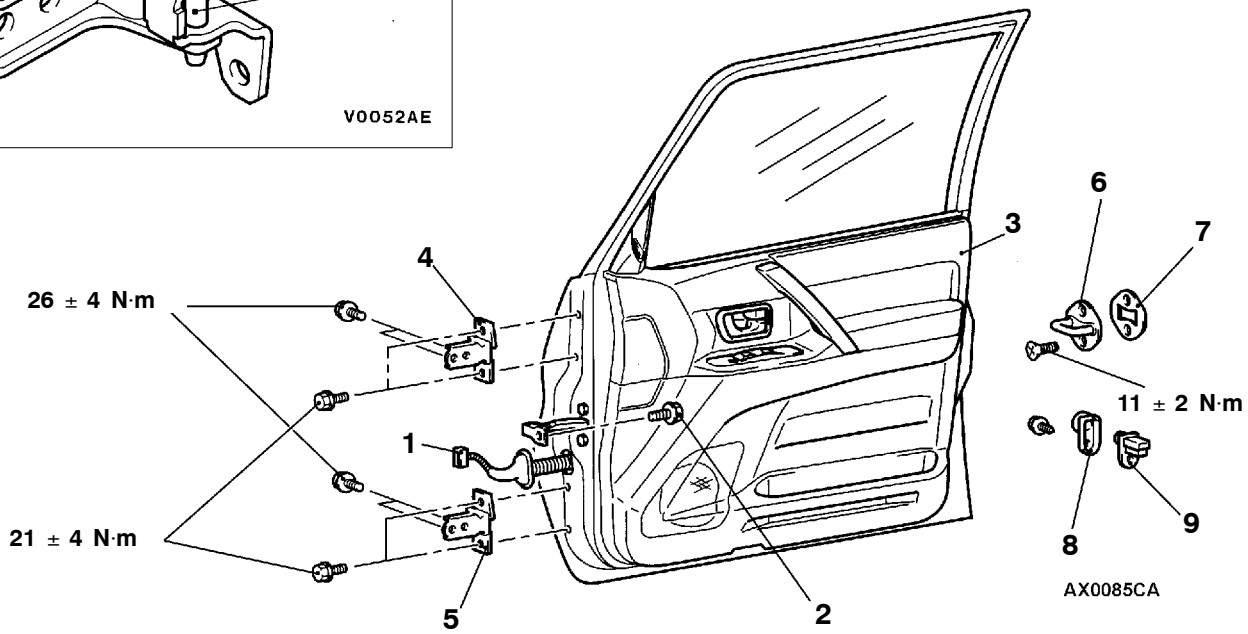


**Door assembly removal steps**

1. Harness connector
2. Door check connecting bolt
3. Door assembly
4. Door upper hinge
5. Door lower hinge

**Striker removal steps**

6. Striker
7. Striker shim

**Door switch removal steps**

8. Door switch cap
9. Door switch

Purchased from www.WorkshopManuals.co.uk

www.WorkshopManuals.co.uk

## REAR DOOR

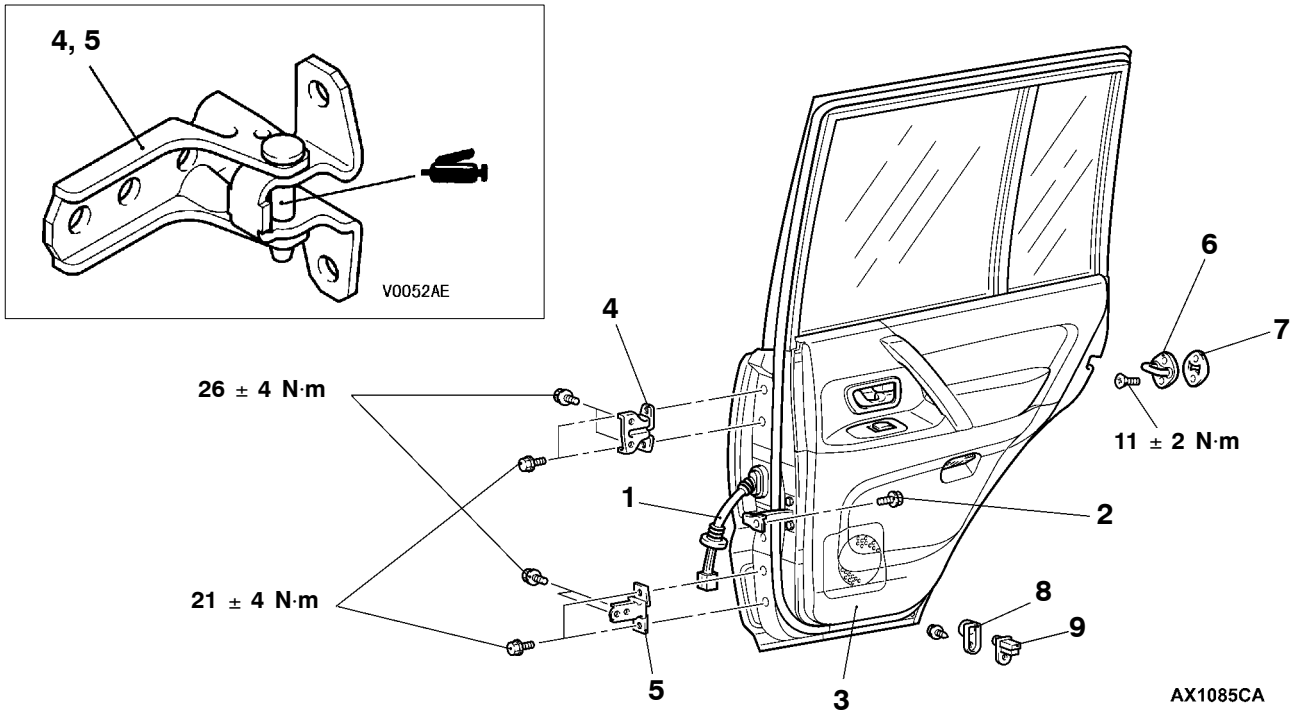


**Door assembly removal steps**

1. Harness connector
2. Door check connecting bolt
3. Door assembly
4. Door upper hinge
5. Door lower hinge

**Striker removal steps**

6. Striker
7. Striker shim

**Door switch removal steps**

8. Door switch cap
9. Door switch

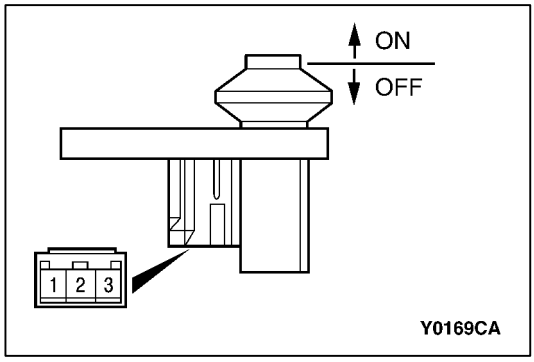


## INSPECTION

### DOOR SWITCH CONTINUITY CHECK

| Switch position | Terminal number | | |
|---|---|---|---|
| | 1 | 2 | 3 |
| Released (ON) | ○ | ○ | ○ |
| Depressed (OFF) | | | |

Purchased from www.WorkshopManuals.co.uk

www.WorkshopManuals.co.uk

# DOOR TRIM AND WATERPROOF FILM

## REMOVAL AND INSTALLATION

### FRONT DOOR

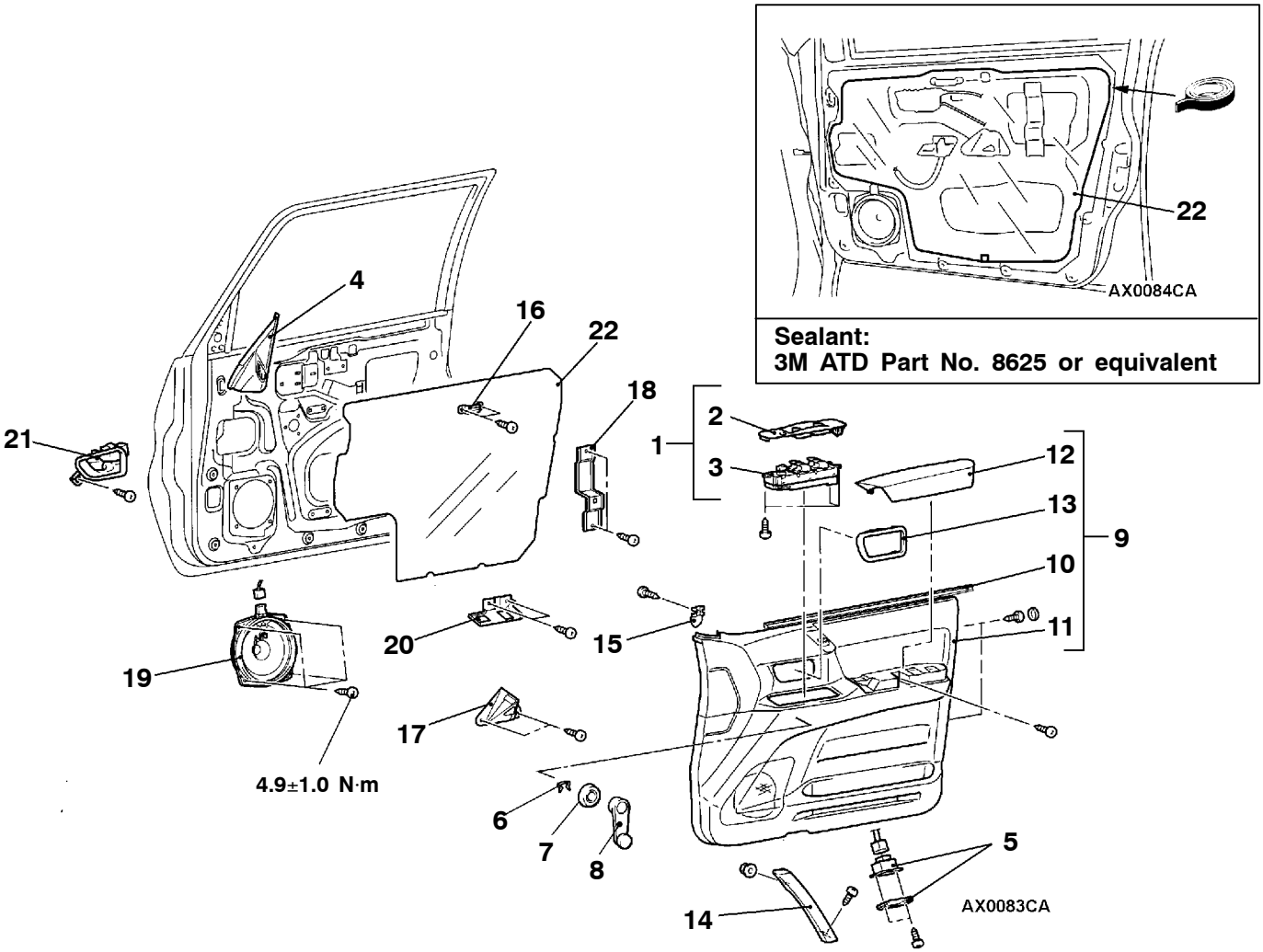


**Removal steps**

◀A▶ 1. Power window switch and power window switch panel assembly
2. Power window switch panel
3. Power window switch
4. Delta cover, inner
5. Door lamp assembly
◀B▶ ▶B◀ 6. Clip <Vehicles without power windows>
▶B◀ 7. Escutcheon <Vehicles without power windows>
▶B◀ 8. Regulator handle <Vehicles without power windows>
9. Door inside handle cover and door trim assembly
10. Door belt line moulding assembly
11. Door trim
12. Front arm restraint cover
◀C▶ 13. Door inside handle cover
14. Door grip
15. Grip bracket
16. Door grip upper retainer
17. Door grip lower bracket
18. Arm restraint bracket
19. Speaker
20. Power window switch bracket
21. Door inside handle
▶A◀ 22. Waterproof film

Purchased from www.WorkshopManuals.co.uk

www.WorkshopManuals.co.uk

## REAR DOOR

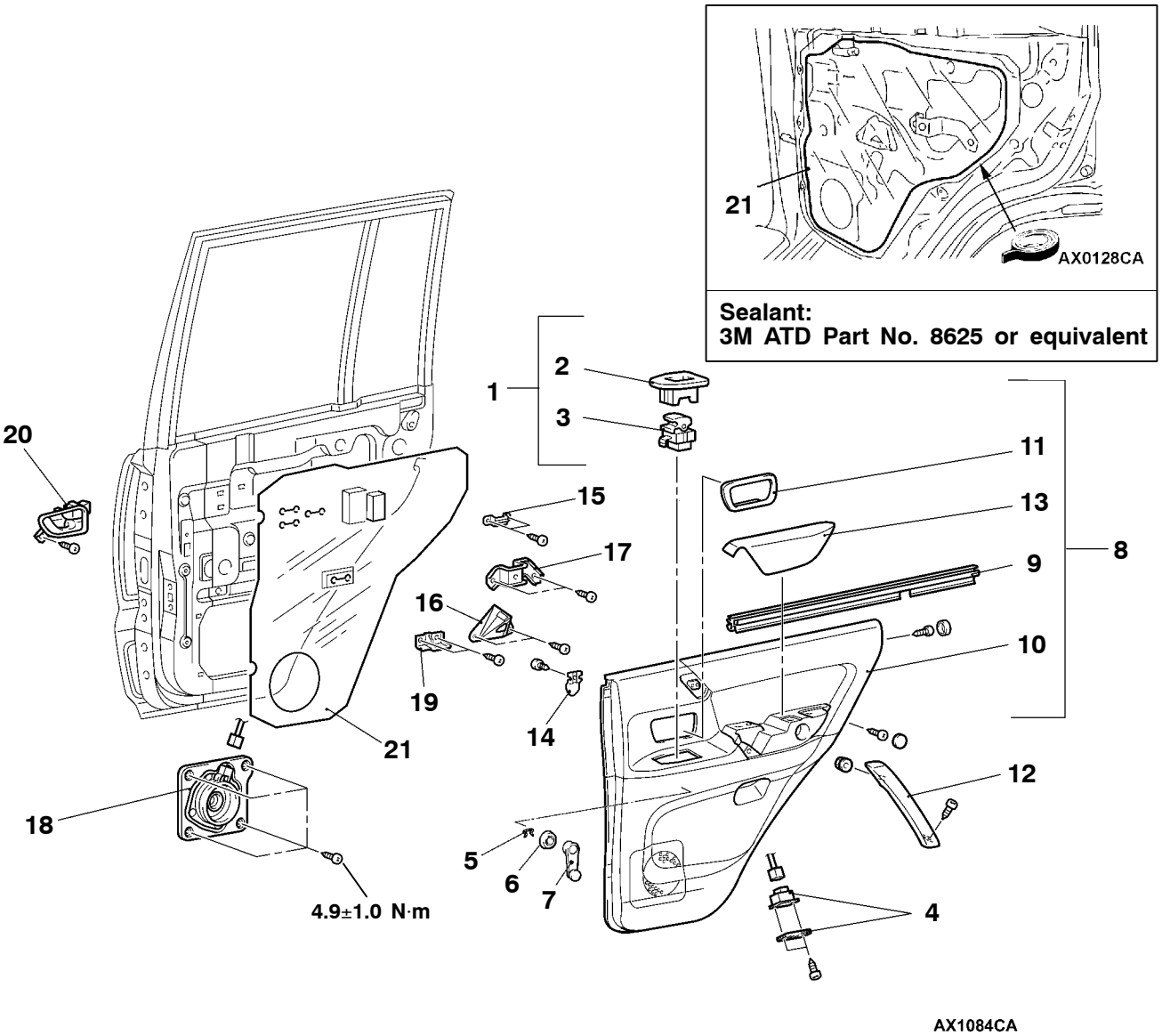


**Removal steps**

◀A▶ 1. Power window switch and power window switch panel assembly
2. Power window switch panel
3. Power window switch
4. Door lamp assembly
◀B▶ ▶B◀ 5. Clip <Vehicles without power windows>
▶B◀ 6. Escutcheon <Vehicles without power windows>
▶B◀ 7. Regulator handle <Vehicles without power windows>
8. Door inside handle cover
9. Door belt line moulding assembly
10. Door trim
◀C▶ 11. Door inside handle cover
12. Door grip
13. Rear arm restraint cover
14. Door grip bracket
15. Door grip upper retainer
16. Door grip lower bracket
17. Arm restraint bracket
18. Speaker
19. Power window switch bracket
20. Door inside handle
▶A◀ 21. Waterproof film

Purchased from www.WorkshopManuals.co.uk

www.WorkshopManuals.co.uk

## CLIP AND CLAW POSITIONS

### FRONT DOOR

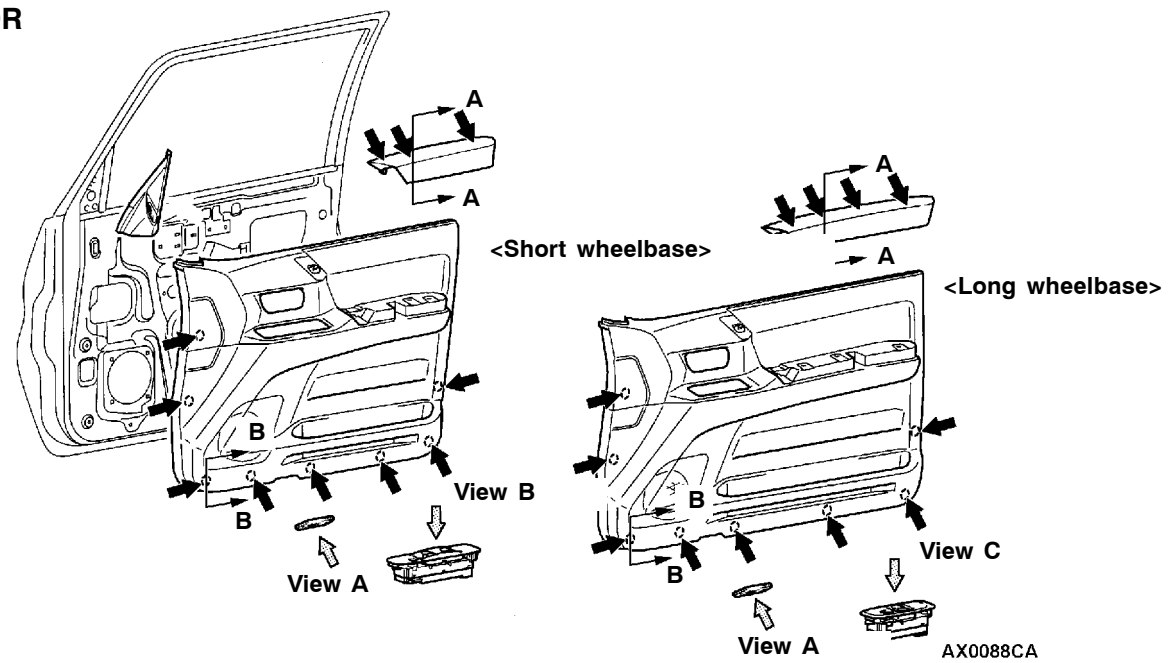


View A

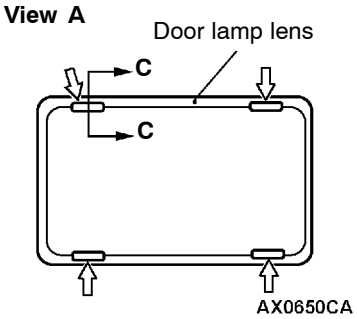


View B

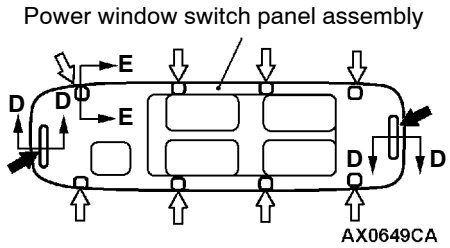


View C

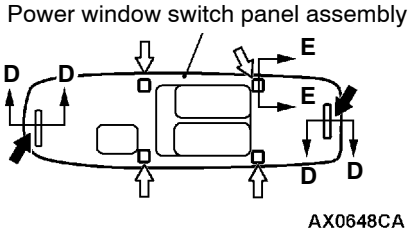


Section A - A

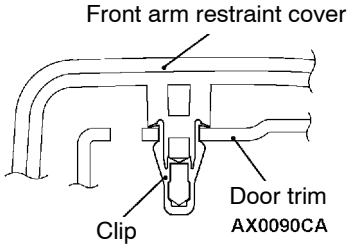


Section B - B

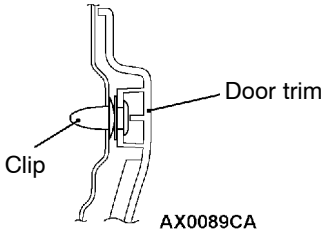


Section C - C

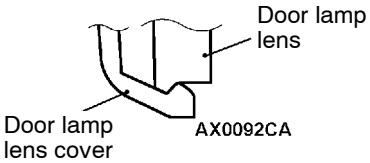


Section D - D

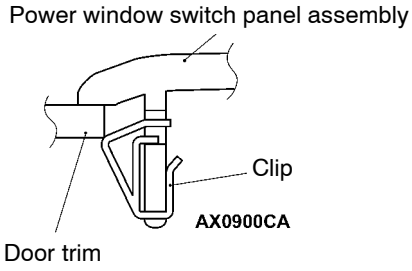


Section E - E

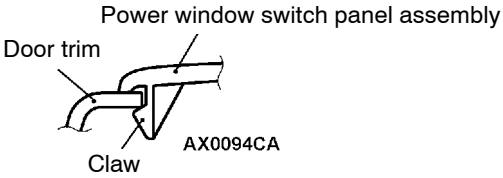


NOTE
⬅ : Clips positions
⇦ : Claws positions

Purchased from www.WorkshopManuals.co.uk

www.WorkshopManuals.co.uk

## REAR DOOR

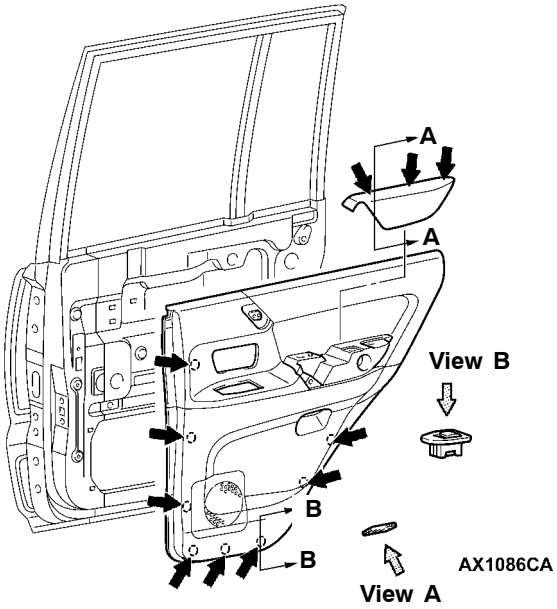


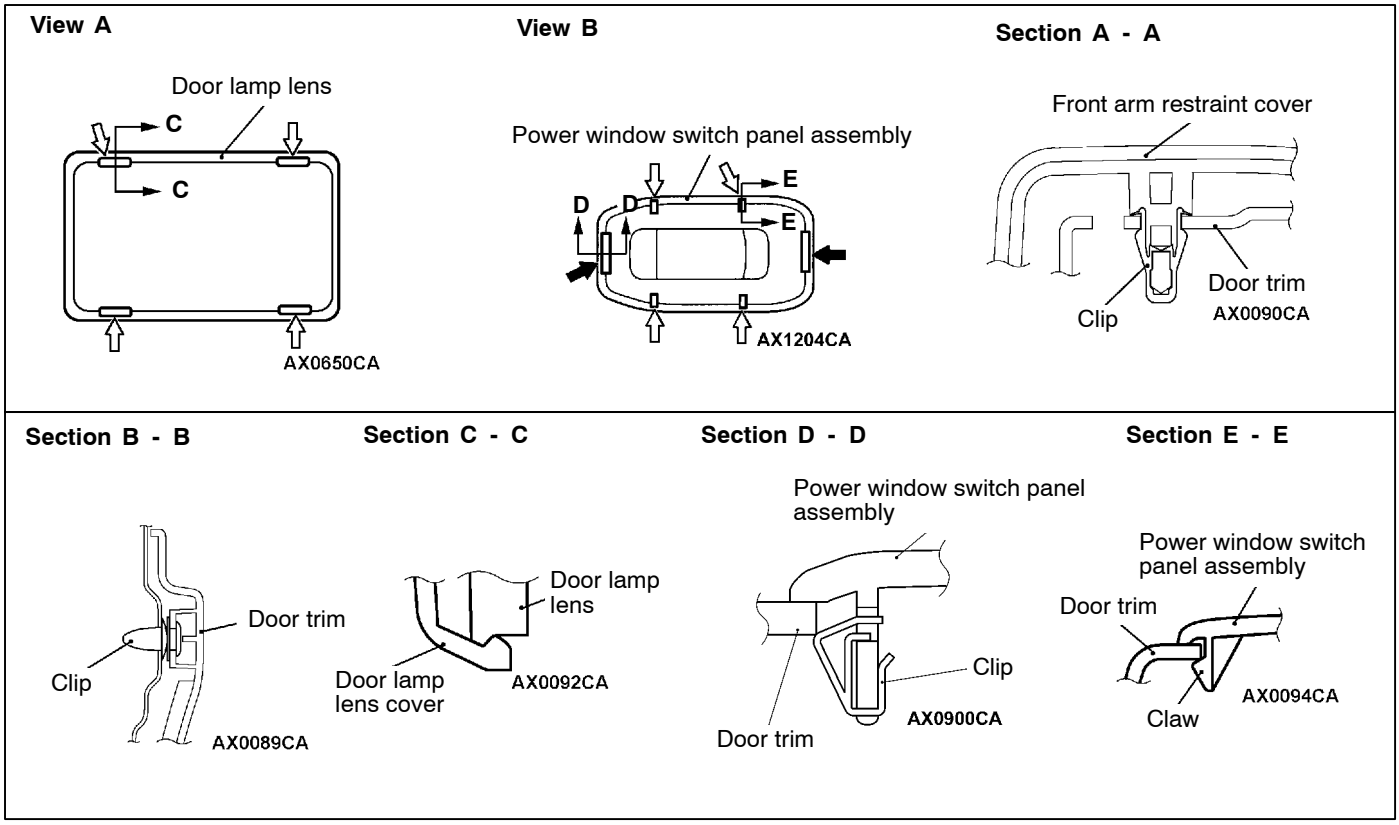


NOTE
⬅ : Clips positions
⇦ : Claws positions

Purchased from www.WorkshopManuals.co.uk

www.WorkshopManuals.co.uk

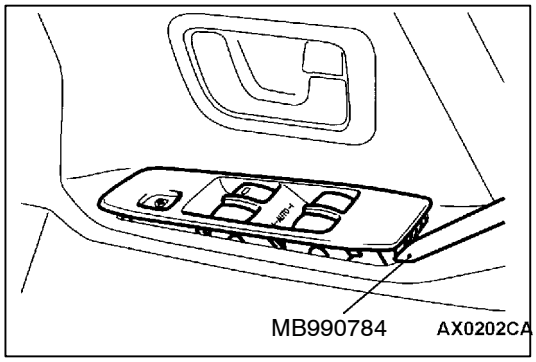


## REMOVAL SERVICE POINTS

### ◀A▶ POWER WINDOW SWITCH AND POWER WINDOW SWITCH PANEL ASSEMBLY REMOVAL

Use the special tool to twist the front and rear of the power window switch and panel assembly to remove it. (Refer to P.42-26, 27, Clip and claw positions.)

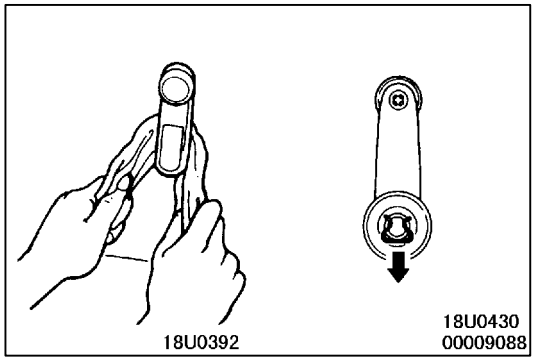


### ◀B▶ CLIP REMOVAL

Use a cloth to remove the clip as shown in the illustration.

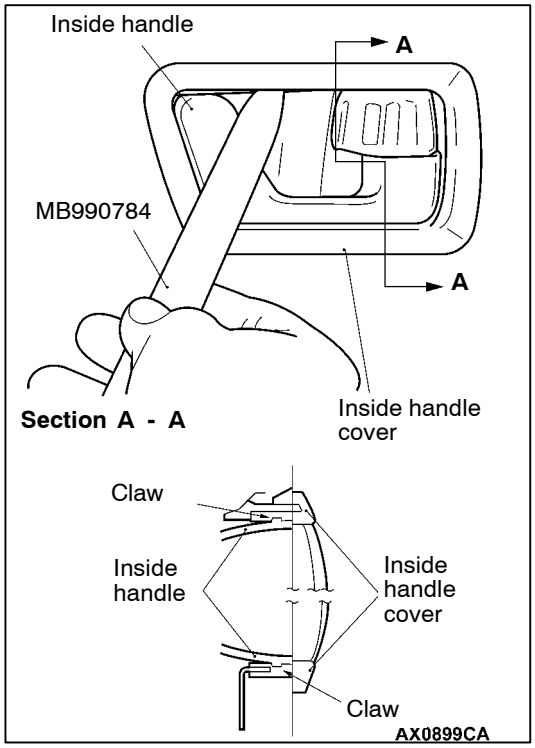


### ◀C▶ DOOR INSIDE HANDLE COVER REMOVAL

1. Insert the special tool between the inside handle upper part and the inside handle cover, and then disengage the upper claw of the inside handle.
2. Disengage the lower claw of the inside handle in the same manner as for the upper claw.
3. Remove the door trim.
4. Remove the inside handle cover from the door trim.

Purchased from www.WorkshopManuals.co.uk

www.WorkshopManuals.co.uk


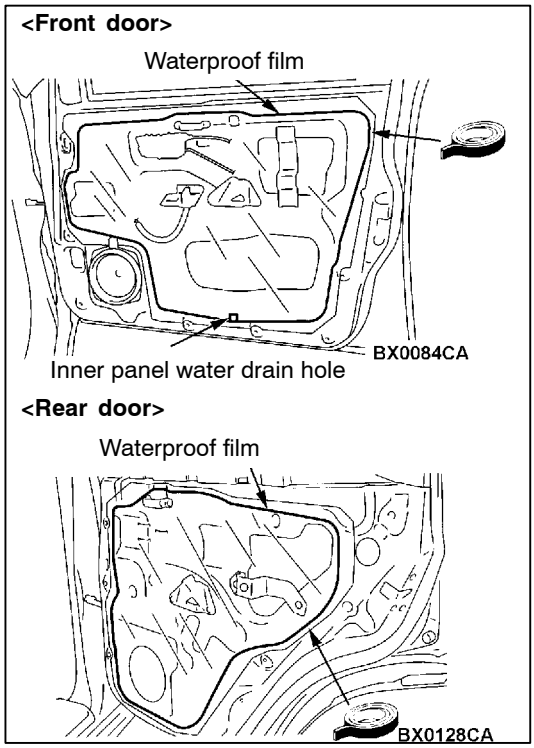


## INSTALLATION SERVICE POINTS

### ▶A◀ WATERPROOF FILM INSTALLATION

Apply the specified sealant to the shown positions of waterproof film, and then attach the waterproof film.

**Specified sealant: 3M ATD Part No. 8625 or equivalent**

**Caution**
**Be sure to apply the sealant below the inner panel water drain holes so as not to plug them.**

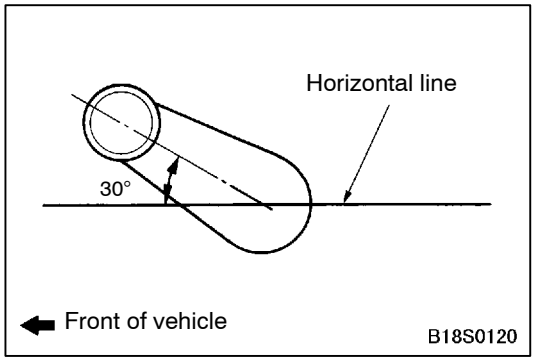


### ▶B◀ REGULATOR HANDLE/ESCUTCHEON/CLIP INSTALLATION

1. Install the clip and escutcheon to the regulator handle.
2. Close the front door window glass fully, and then install the regulator handle as shown in the illustration.

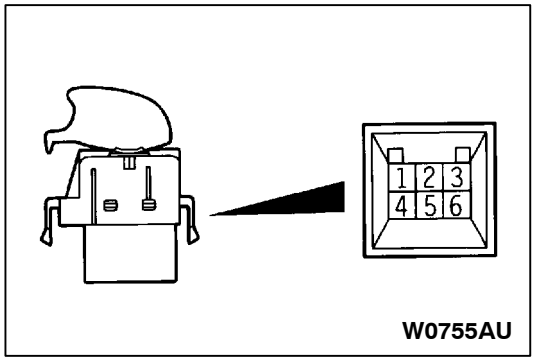


## INSPECTION

### POWER WINDOW SUB SWITCH CONTINUITY CHECK

| Switch position | Terminal No. | | |
|---|---|---|---|
| | 1 | 4 | 6 |
| UP | | ○ | ○ |
| DOWN | ○ | ○ | |

NOTE
Power window main switch uses SWS system, for the power window main switch check, refer to GROUP 54B - SWS.

Purchased from www.WorkshopManuals.co.uk

www.WorkshopManuals.co.uk

# DOOR GLASS AND REGULATOR

## REMOVAL AND INSTALLATION

### FRONT DOOR

**Pre-removal Operation**
Door Trim and Waterproof Film Removal (Refer to P.42-24.)

**Post-installation Operation**
- Door Window Glass Adjustment (Refer to P.42-20.)
- Door Trim and Waterproof Film Installation (Refer to P.42-24.)

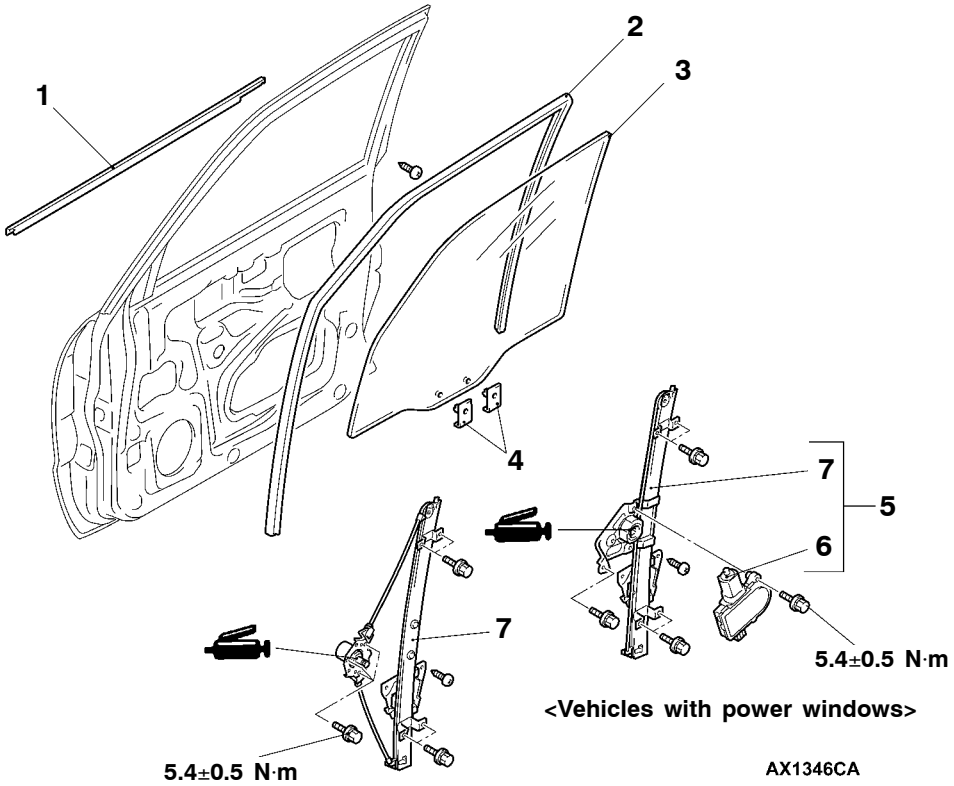


<Vehicles with power windows>

<Vehicles without power windows>

**Door window glass removal steps**

1. Door belt line moulding assembly
2. Door window glass runchannel
   ▶B◀ ● Check operation
3. Door window glass
4. Glass holder

**Power window regulator and motor assembly removal steps**

5. Power window regulator and motor assembly
   ▶A◀ 6. Power window motor assembly
   ▶A◀ 7. Power window regulator assembly

Purchased from www.WorkshopManuals.co.uk

www.WorkshopManuals.co.uk

## REAR DOOR

**Pre-removal Operation**
Door Trim and Waterproof Film Removal (Refer to P.42-25.)

**Post-installation Operation**
- Door Window Glass Adjustment (Refer to P.42-20.)
- Door Trim and Waterproof Film Installation (Refer to P.42-25.)

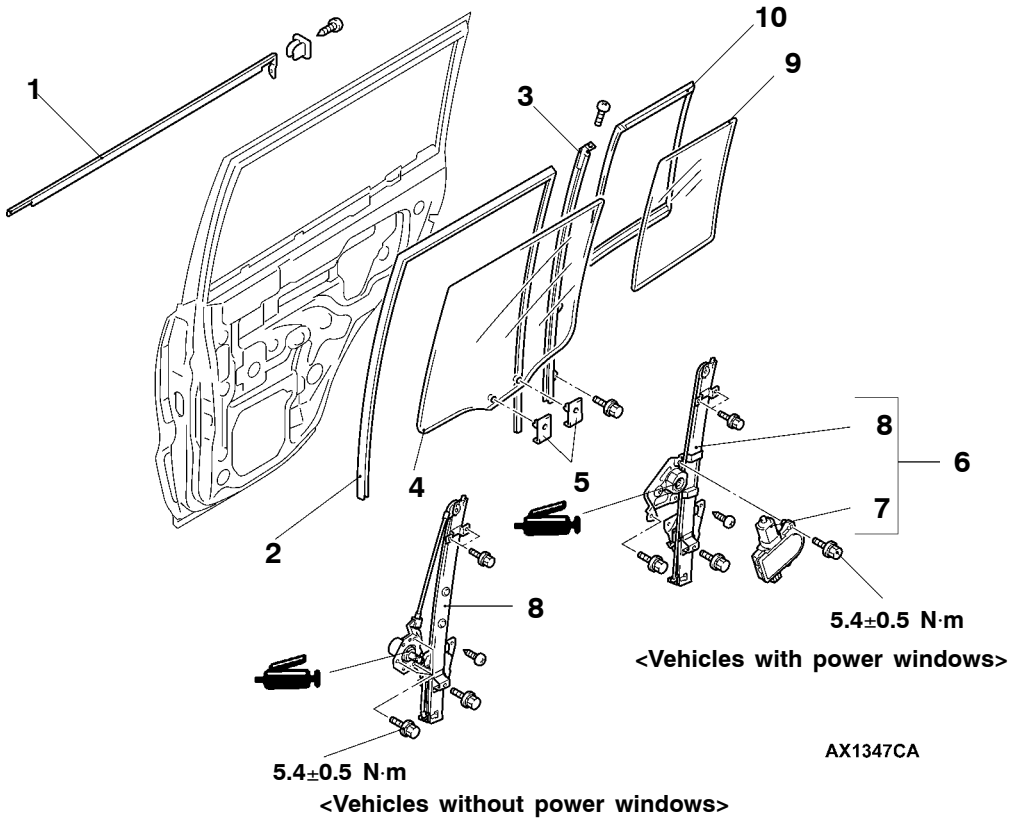


**Removal steps**

1. Door belt line moulding assembly
2. Door window glass runchannel
3. ◀A▶ ▶C◀ Center sash
   ▶B◀ ● Check operation
4. Rear door window glass
5. Glass holder
6. Power window regulator and motor assembly
7. ▶A◀ Power window motor assembly
8. ▶A◀ Power window regulator assembly
9. Stationary window glass
10. Stationary window weatherstrip

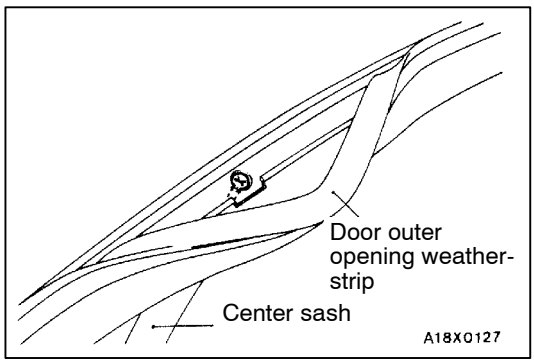


## REMOVAL SERVICE POINT

### ◀A▶ CENTER SASH REMOVAL

1. Remove only the section of the door outer opening weatherstrip which is attached to the center sash.
2. Remove the center sash mounting screws, and then remove the center sash from the door panel.

Purchased from www.WorkshopManuals.co.uk

www.WorkshopManuals.co.uk

## INSTALLATION SERVICE POINTS

### ▶A◀ POWER WINDOW MOTOR ASSEMBLY/POWER WINDOW REGULATOR ASSEMBLY INSTALLATION

Power window motor assembly and window regulator assembly pre-installation operations

1. Connect the power window motor assembly to the body side harness connector, and then turn the ignition switch ON.
2. Operate the power window motor assembly for 5-10 seconds by pressing the power window switch to the UP position.

   NOTE
   This operation will cause the limit switch inside the power window motor assembly to be reset.

   **Caution**
   **(1) The power window motor assembly should not be operated again until it is installed to the glass.**
   **(2) The clamping prevention function does not operate the first time that the glass is fully closed.**

### ▶B◀ CHECK OPERATION

1. Install the glass to the power window motor assembly.
2. Press the power window switch to fully-close the glass, and then return the glass to the fully-open position.

   NOTE
   This operation will program the power window-ECU.

### ▶C◀ CENTER SASH INSTALLATION

Securely insert the center sash into the window rear sash (door).

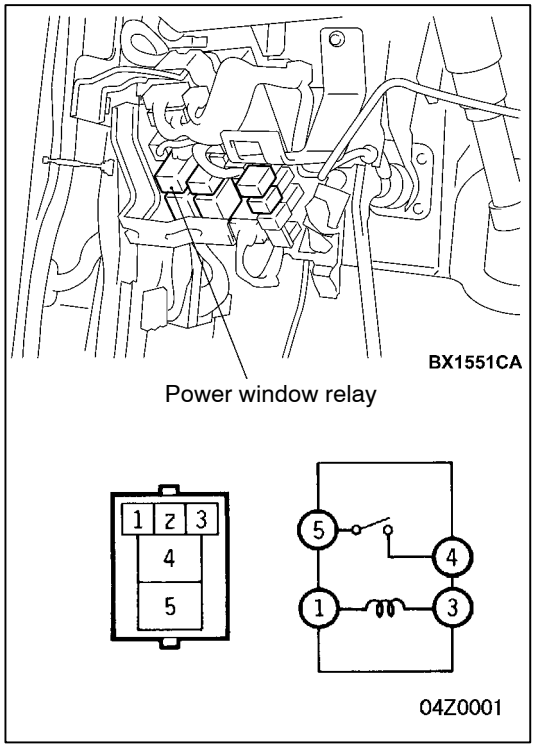


## INSPECTION

### POWER WINDOW RELAY CONTINUITY CHECK

| Battery voltage | Terminal No. | | | |
|---|---|---|---|---|
| | 1 | 3 | 4 | 5 |
| Not applied | ○ | ○ | | |
| Applied | ⊕ | ⊖ | ○ | ○ |

Purchased from www.WorkshopManuals.co.uk

www.WorkshopManuals.co.uk

# DOOR HANDLE AND LATCH

## REMOVAL AND INSTALLATION

**Pre-removal Operation**
Door Trim Removal (Refer to P.42-27.)

**Post-installation Operation**
- Door Inside Handle Play Check (Refer to P.42-21.)
- Door Outside Handle Play Check (Refer to P.42-21.)
- Door Trim Installation (Refer to P.42-24.)

### FRONT DOOR

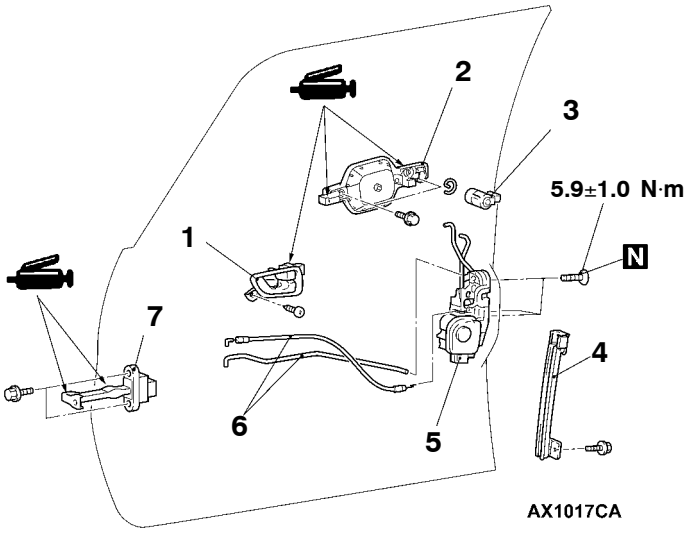


### REAR DOOR

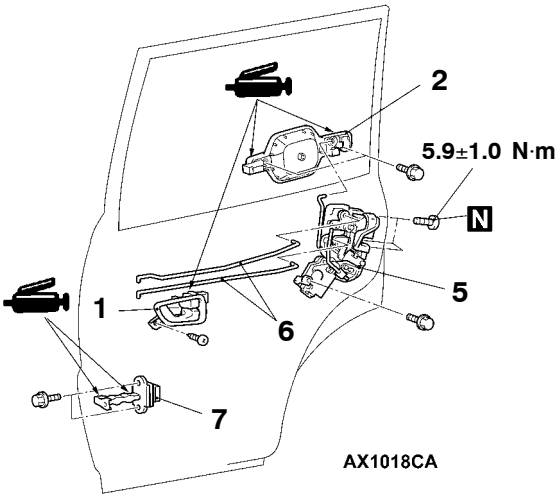


**Door handle and door latch assembly removal steps**

▶C◀ 1. Door inside handle
- Waterproof film (Refer to P.42-24.)

2. Door outside handle
3. Door lock key cylinder
▶B◀ 4. Rear lower sash
5. Door latch assembly
6. Link assembly

**Door check removal steps**

- Waterproof film (Refer to P.42-24.)

▶A◀ 7. Door check

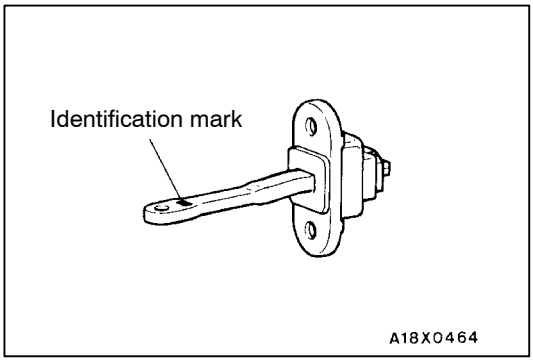


## INSTALLATION SERVICE POINTS

### ▶A◀ DOOR CHECK INSTALLATION

Install with the following identification marks upward.

| Items | | Identification mark |
|---|---|---|
| Front door | Left door | 20L |
| | Right door | 20R |
| Rear door | Left door | 26L |
| | Right door | 26R |

### ▶B◀ REAR LOWER SASH INSTALLATION

Be sure to install the rear lower sash to the window rear sash (at door) securely.

Purchased from www.WorkshopManuals.co.uk

www.WorkshopManuals.co.uk

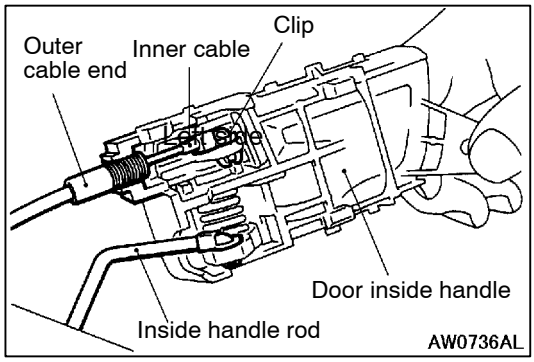


### ▶C◀ DOOR INSIDE HANDLE INSTALLATION

1. Install the inside lock cable to the door inside handle as follows:
   (1) Install the inner cable end in the inside lock cable to the clip in the door inside handle.
   (2) Turn the inside lock knob to the door lock position.
   (3) Install the outer cable end to the door inside handle securely.
   (4) Install the clip to the inner cable.
2. Install the inside handle rod to the door inside handle.
3. Install the door inside handle to the door.

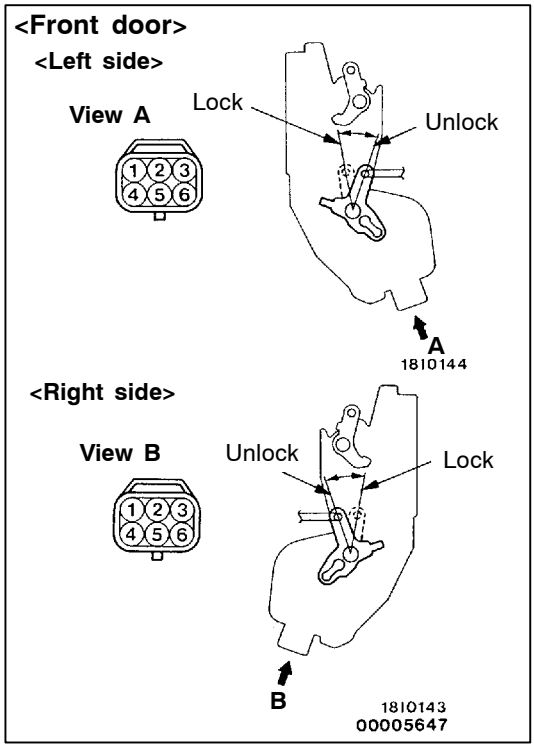


## INSPECTION

### DOOR LOCK ACTUATOR CHECK

**Front door**

**<Left side>**

| Rod position | Terminal No. | | | | | Rod operation |
|---|---|---|---|---|---|---|
| | 1 | 2 | 3 | 4 | 6 | Rod operation |
| LOCK | | | | ⊕ | ⊖ | LOCK to UNLOCK |
| UNLOCK | | | | ⊖ | ⊕ | UNLOCK to LOCK |
| LOCK* | ○ | | ○ | | | |
| UNLOCK* | ○ | ○ | | | | |

NOTE :
*: driver's side only

<Right side>

| Rod position | Terminal No. | | | | | Rod operation |
|---|---|---|---|---|---|---|
| | 1 | 2 | 3 | 4 | 6 | Rod operation |
| LOCK | | | | ⊖ | ⊕ | LOCK to UNLOCK |
| UNLOCK | | | | ⊕ | ⊖ | UNLOCK to LOCK |
| LOCK* | ○ | | ○ | | | |
| UNLOCK* | | ○ | ○ | | | |

NOTE :
*: driver's side only

Purchased from www.WorkshopManuals.co.uk

www.WorkshopManuals.co.uk

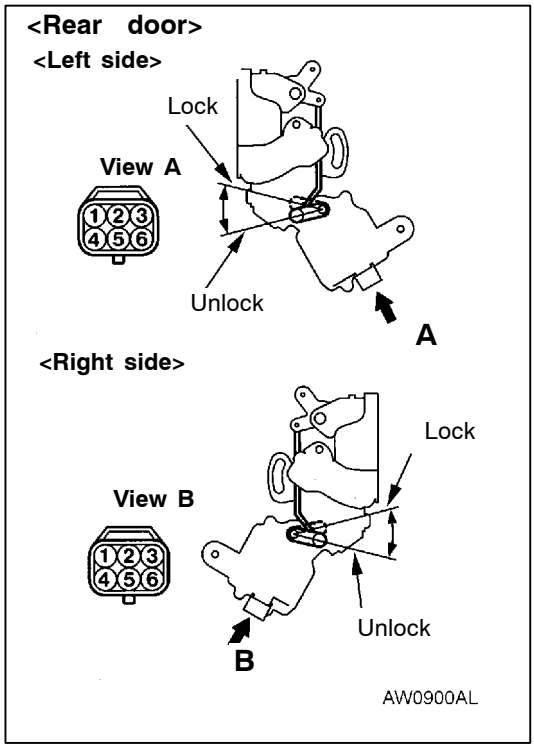


## Rear door

### <Left side>

| Rod position | Terminal No. | | Rod operation |
|---|---|---|---|
| | 2 | 3 | |
| LOCK | ⊕ | ⊖ | LOCK to UNLOCK |
| UNLOCK | ⊖ | ⊕ | UNLOCK to LOCK |

### <Right side>

| Rod position | Terminal No. | | Rod operation |
|---|---|---|---|
| | 2 | 3 | |
| LOCK | ⊖ | ⊕ | LOCK to UNLOCK |
| UNLOCK | ⊕ | ⊖ | UNLOCK to LOCK |

Purchased from www.WorkshopManuals.co.uk

www.WorkshopManuals.co.uk

# WINDOW GLASS RUNCHANNEL AND DOOR OPENING WEATHERSTRIP

## REMOVAL AND INSTALLATION

### FRONT DOOR

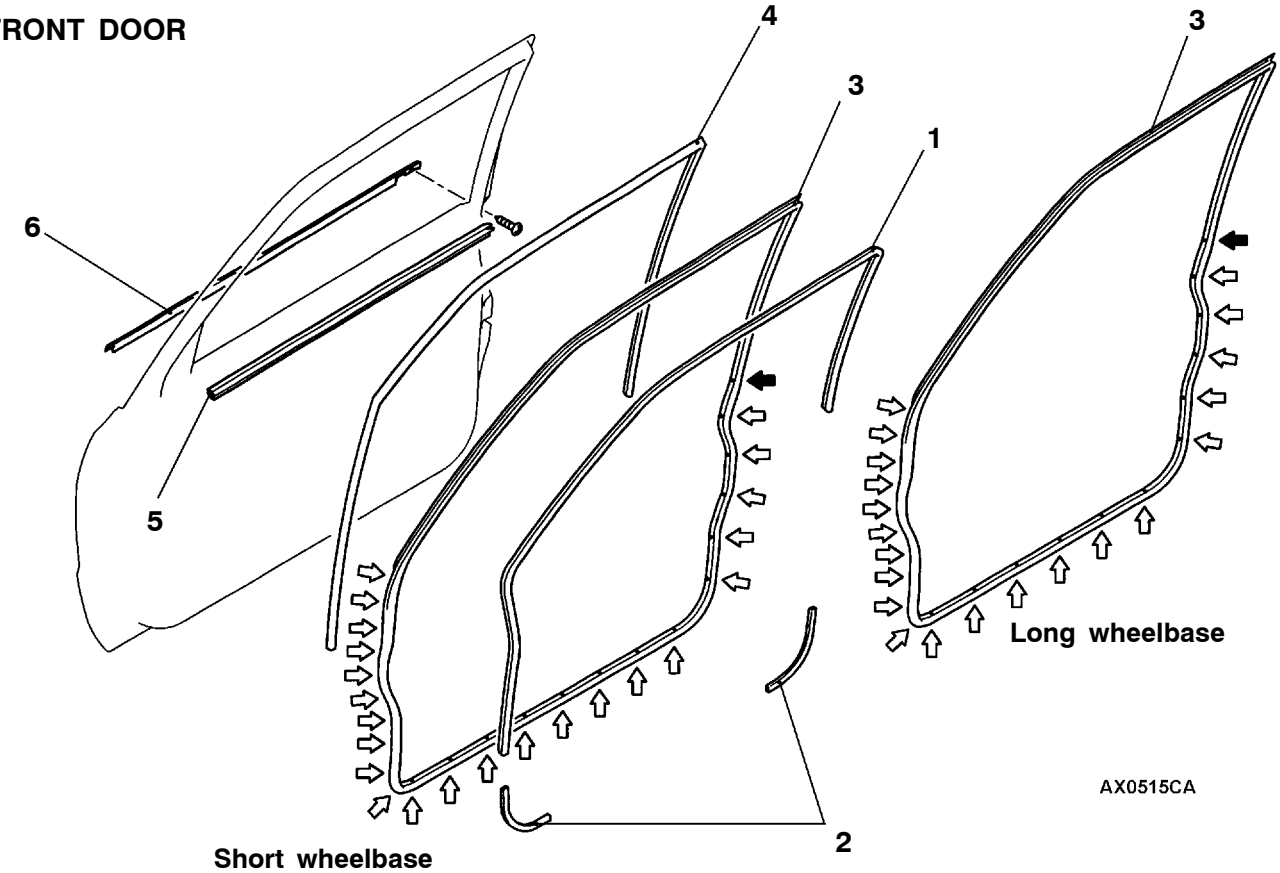


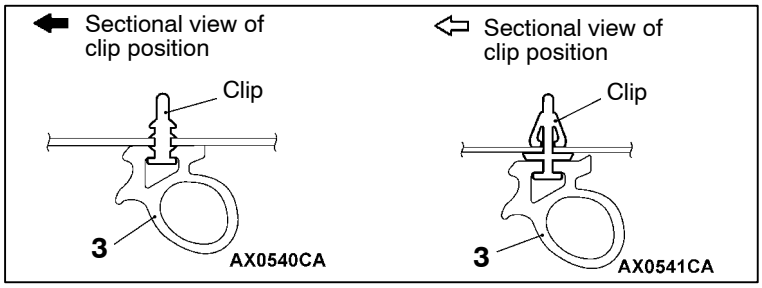


**Door inner opening weatherstrip removal steps**

▶B◀ 1. Door inner opening weatherstrip
- Scuff plate (Refer to GROUP 52A.)
- Cowl side trim (Refer to GROUP 52A.)
- Center pillar lower trim (Refer to GROUP 52A.)

▶B◀ 2. Edge seal rubber

**Door outer opening weatherstrip removal steps**

- Front door check mounting bolts (door side) (Refer to P.42-22.)

◀A▶ 3. Door outer opening weatherstrip

**Door window glass runchannel removal steps**

▶A◀ 4. Door window glass runchannel
- Front door trim (Refer to P.42-24.)

5. Door belt line inner weatherstrip

**Door beltline moulding removal**

6. Door beltline moulding

Purchased from www.WorkshopManuals.co.uk

www.WorkshopManuals.co.uk

## REAR DOOR

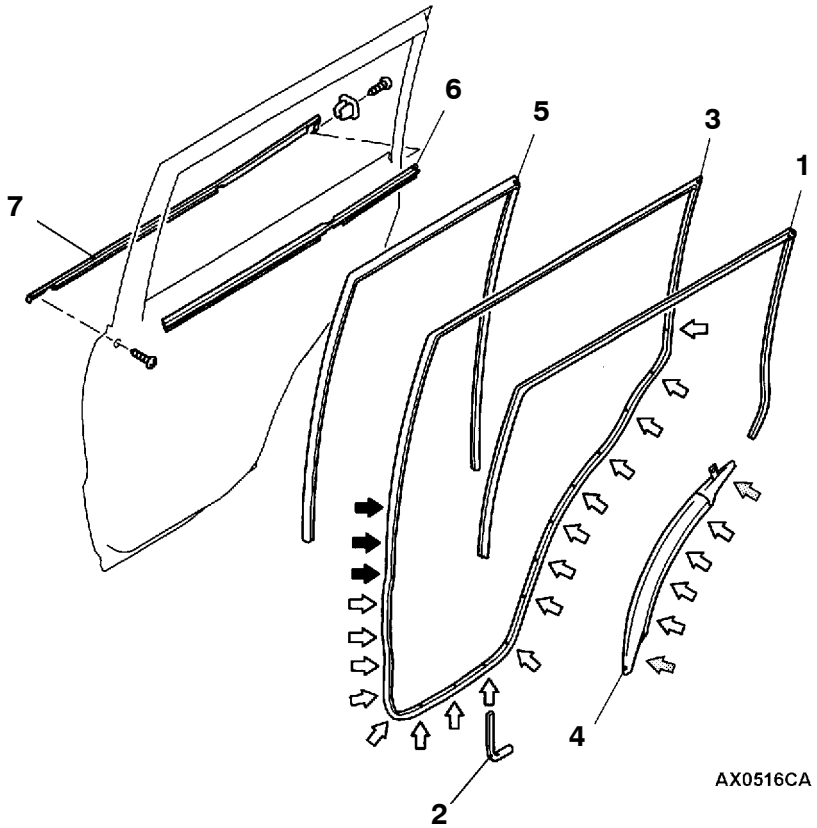


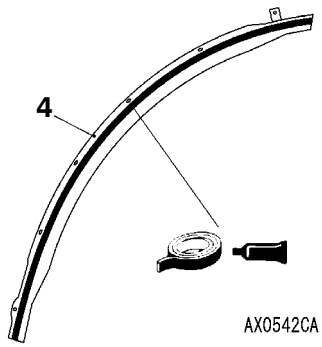


**Adhesive tape:**
**Double-sided tape [23 mm width and 0.8 mm thickness], dry adhesive**

Sectional view of clip position

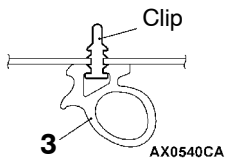


Sectional view of clip position

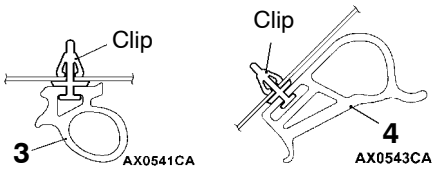


Sectional view of clip position

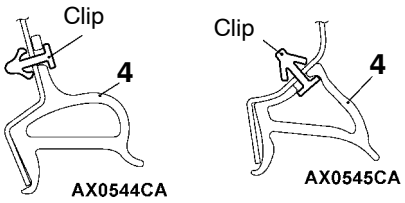


**Door inner opening weatherstrip removal steps**

▶B◀ 1. Door inner opening weatherstrip
- Center pillar lower trim (Refer to GROUP 52A.)

▶B◀ 2. Edge seal rubber

**Door outer opening weatherstrip removal steps**

- Rear door check mounting bolts (door side) (Refer to P.42-23.)

◀A▶ 3. Door outer opening weatherstrip
4. Door outer opening lower weather-strip

**Door window glass runchannel removal steps**

▶A◀ 5. Door window glass runchannel
- Rear door trim (Refer to P.42-25.)

6. Door belt line inner weatherstrip

**Door beltline moulding removal**

7. Door beltline moulding

Purchased from www.WorkshopManuals.co.uk

www.WorkshopManuals.co.uk

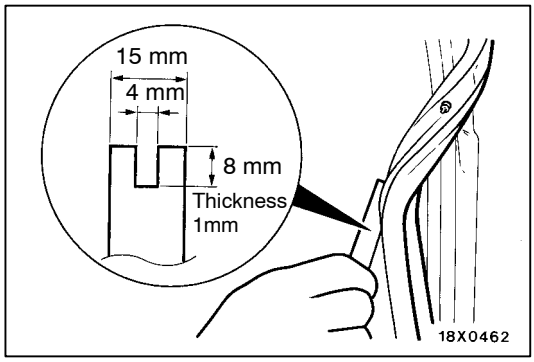


## REMOVAL SERVICE POINT

### ◀A▶ DOOR OUTER OPENING WEATHERSTRIP REMOVAL

Make a tool as shown and remove the door opening weatherstrip.

## INSTALLATION SERVICE POINTS

### ▶A◀ DOOR WINDOW GLASS RUNCHANNEL INSTALLATION

When installing the door window glass runchannel, remove the waterproof film.

### ▶B◀ EDGE SEAL RUBBER/DOOR INNER OPENING WEATHERSTRIP INSTALLATION

Attach the edge seal rubber and door inner opening weatherstrip in the places specified below.

**Edge seal rubber and door inner weatherstrip attachment locations**

**FRONT DOOR**

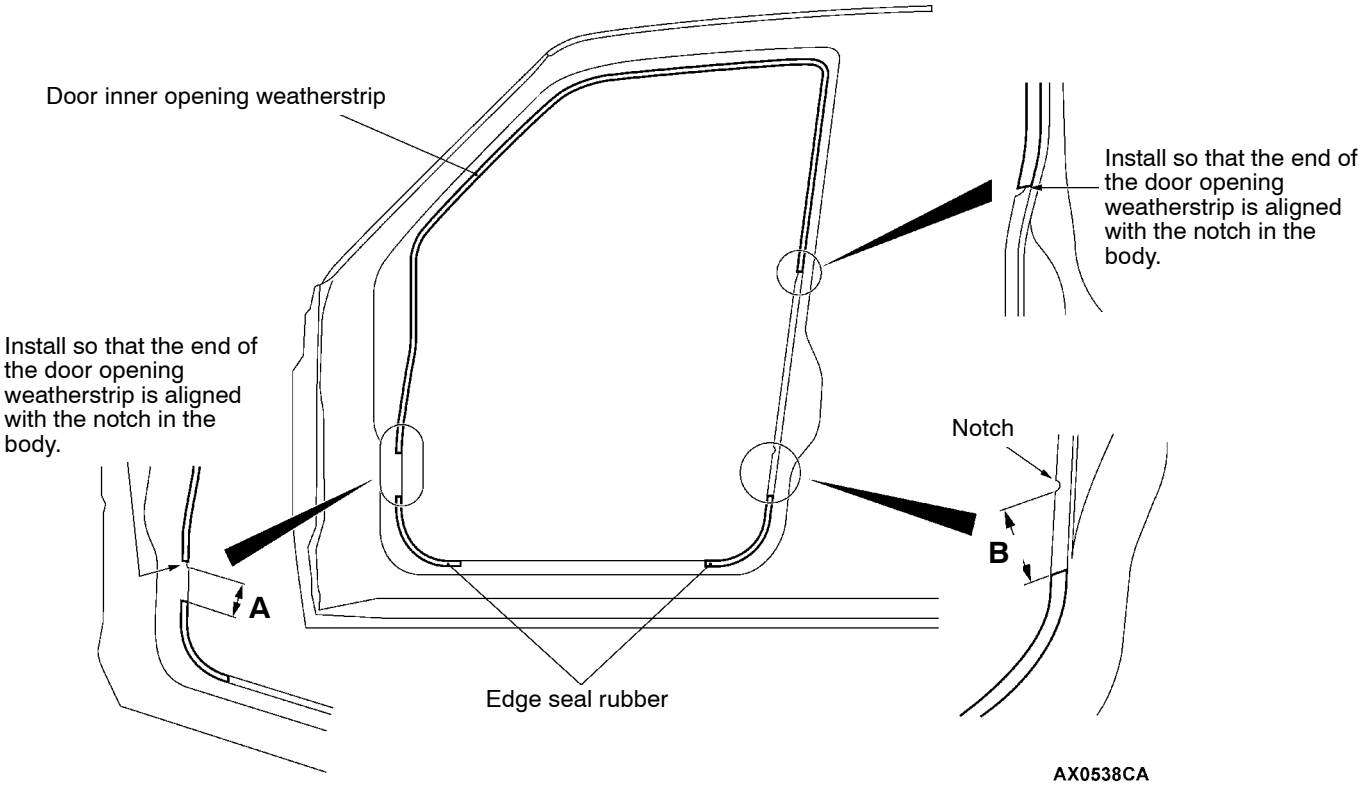


A: 87 mm
B: 106 mm (Long wheelbase)
B: 98 mm (Short wheelbase)

Purchased from www.WorkshopManuals.co.uk

www.WorkshopManuals.co.uk

**REAR DOOR**

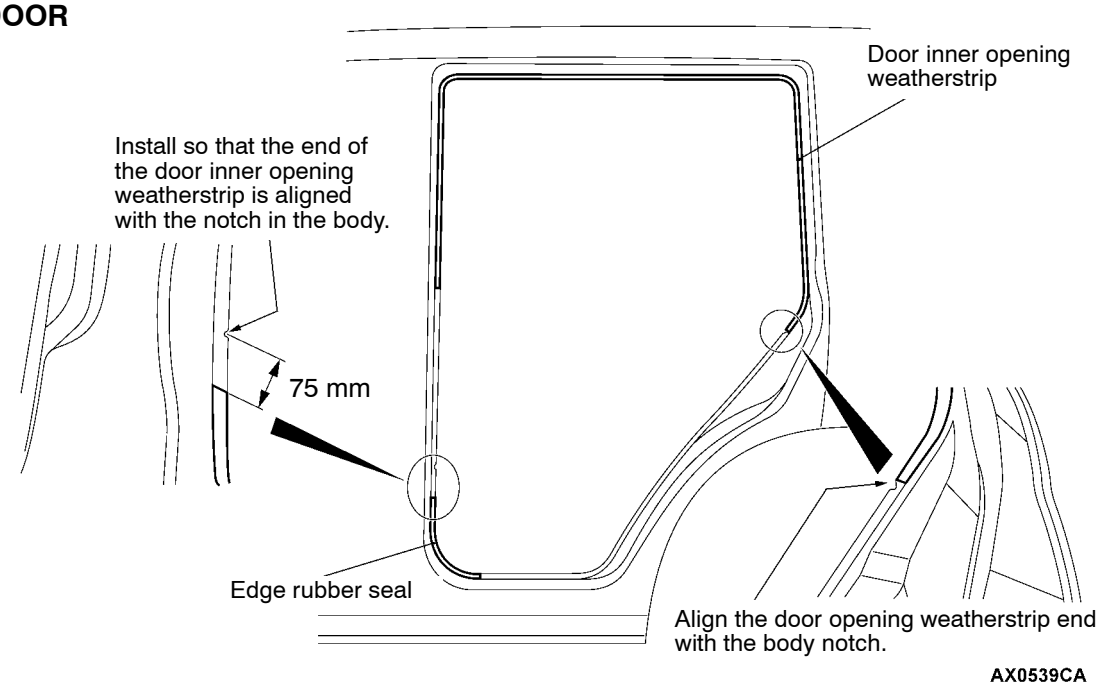


# BACK DOOR

## SERVICE SPECIFICATION

| Item | Standard value |
|---|---|
| Back door handle play mm | 2.3 |

## SEALANT

| Item | Specified sealant | Remark |
|---|---|---|
| Waterproof film | 3M ATD Part No. 8625 or equivalent | Ribbon sealer |

## SPECIAL TOOL

| Tool | Number | Name | Use |
|---|---|---|---|
| 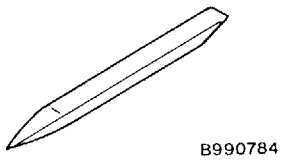  | MB990784 | Ornament remover | Back door trim removal |

## TROUBLESHOOTING

NOTE
Power window main switch uses SWS system, for the power window main switch check, refer to GROUP 54B - SWS.

Purchased from www.WorkshopManuals.co.uk

www.WorkshopManuals.co.uk

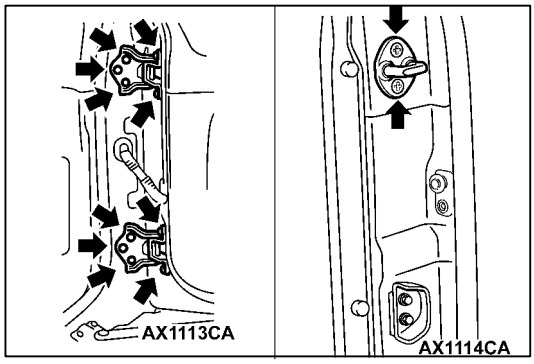


# ON-VEHICLE SERVICE

## BACK DOOR FIT ADJUSTMENT

1. If the striker and latch mesh badly, move the striker forward and backward or right and left to adjust.
2. If uneven clearance is present between back door and body, reposition the hinge and striker and/or change the thickness of shim (change the number of shim) to adjust the clearance.

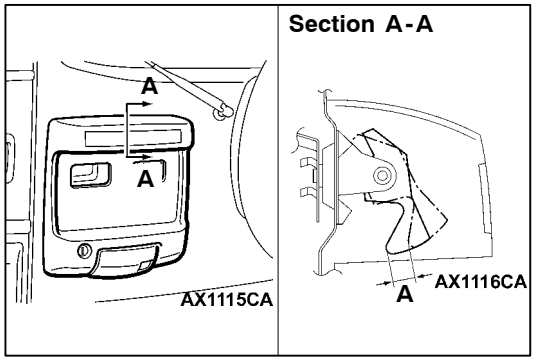


## BACK DOOR HANDLE PLAY CHECK

1. Measure the back door handle play.

   **Standard value (A): 2.3 mm**
2. If the back door handle play is not within the standard value, check the back door handle and door latch assembly. Replace if necessary.

Purchased from www.WorkshopManuals.co.uk

www.WorkshopManuals.co.uk

# BACK DOOR ASSEMBLY

## REMOVAL AND INSTALLATION

**Pre-removal Operation**
- High-mounted Stop Lamp Removal (Refer to GROUP 54A.)
- Spare Tyre Removal)

**Pre-removal Operation**
- High-mounted Stop Lamp Installation (Refer to GROUP 54A.)
- Spare Tyre Installation
- Back Door Fit Adjustment (Refer to P.42-40.)

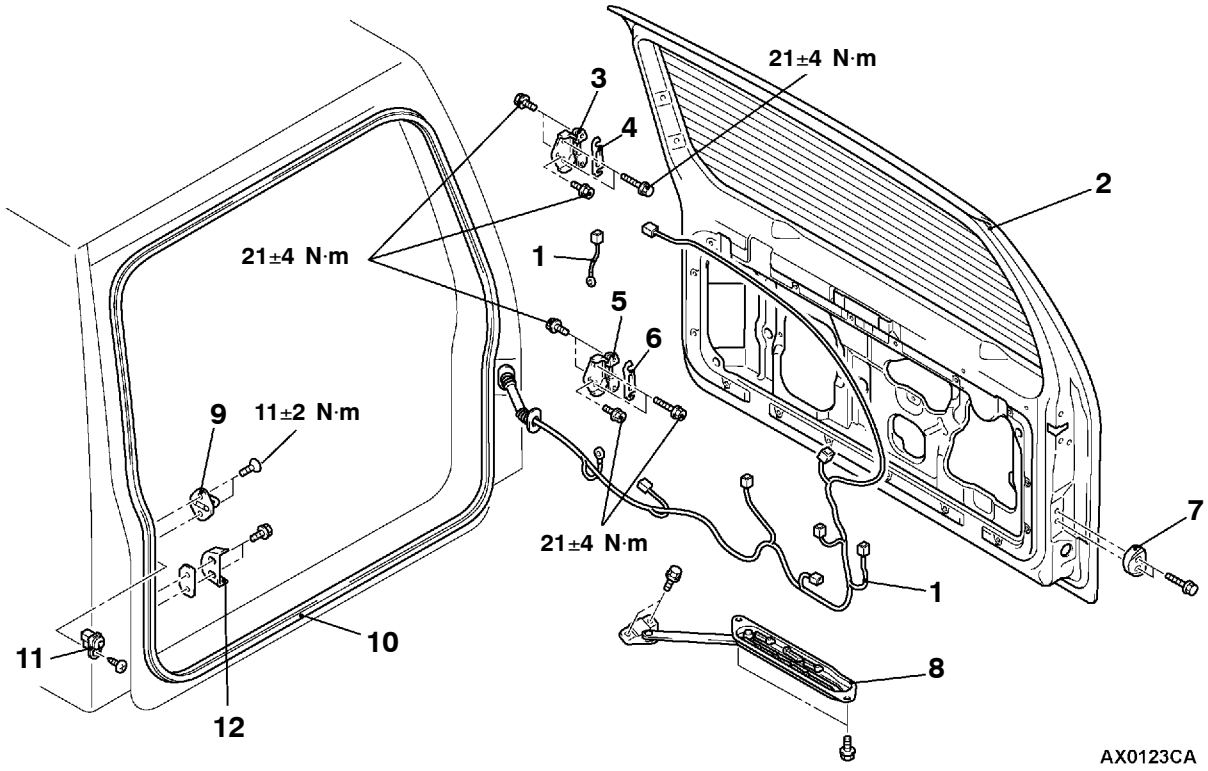


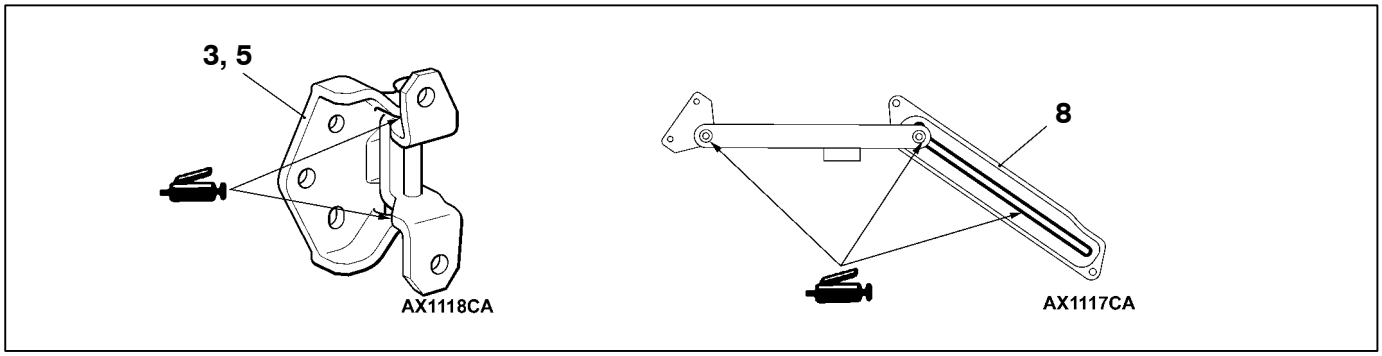


**Removal steps**
- Back door trim and waterproof film (Refer to P.42-43.)

1. Harness connector
2. Back door assembly
3. Back door upper hinge
4. Shim
5. Back door lower hinge
6. Shim
7. Damper mail
8. Back door stopper
9. ▶B◀ Striker
10. ▶A◀ Back door opening weatherstrip
11. Door switch
12. Back door bumper, female

Purchased from www.WorkshopManuals.co.uk

www.WorkshopManuals.co.uk

## INSTALLATION SERVICE POINTS

### ▶A◀ BACK DOOR OPENING WEATHERSTRIP INSTALLATION

Align the marking section on the back door opening weatherstrip with the centre of the body.

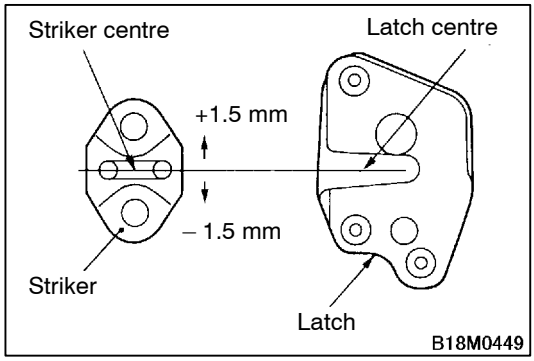


### ▶B◀ STRIKER INSTALLATION

Install the striker so that the striker centre does not deviate more than ±1.5 mm from the latch centre.

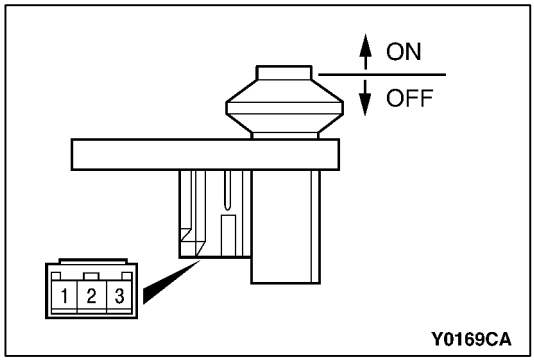


## INSPECTION

### DOOR SWITCH CONTINUITY CHECK

| Switch position | Terminal No. | | |
|---|---|---|---|
| | 1 | 2 | 3 |
| Released (ON) | ○ | ○ | ○ |
| Pressed (OFF) | | | |

Purchased from www.WorkshopManuals.co.uk

www.WorkshopManuals.co.uk

# BACK DOOR TRIM AND WATERPROOF FILM

## REMOVAL AND INSTALLATION

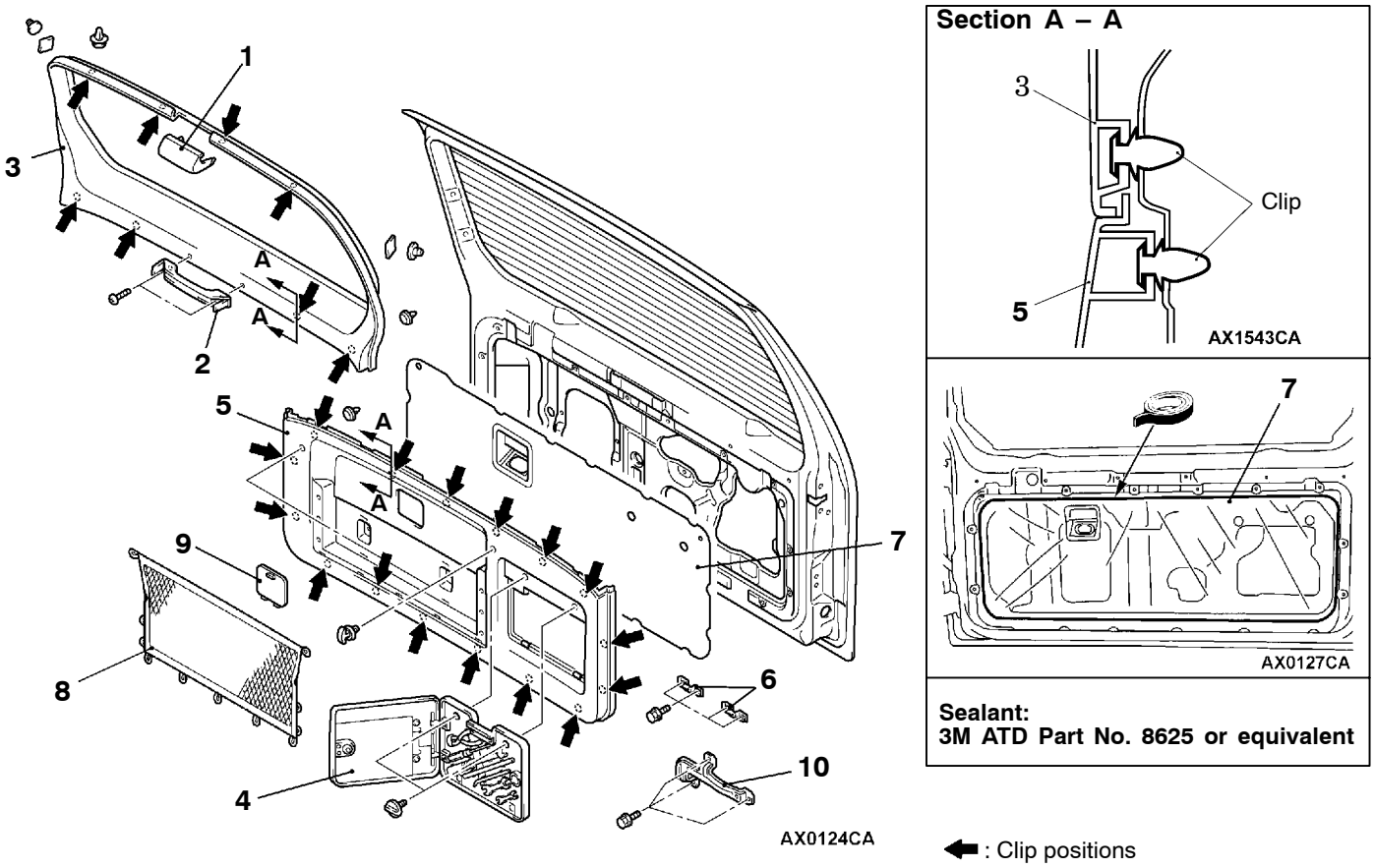


**Removal steps**

1. High-mounted stop lamp cover
   - High-mounted stop lamp (Refer to GROUP 54A.)
2. ▶A◀ Door pull handle
3. Back door upper trim
4. Toolbox assembly
5. Back door lower trim
6. Toolbox bracket, lower
7. Waterproof film
8. Back door lid
9. Washer tank lid
10. Toolbox bracket, upper

## INSTALLATION SERVICE POINT

### ▶A◀ DOOR PULL HANDLE INSTALLATION

Install so that the arrow on the underside is pointing upwards.

Purchased from www.WorkshopManuals.co.uk

www.WorkshopManuals.co.uk

# BACK DOOR HANDLE AND LATCH

## REMOVAL AND INSTALLATION

**Post-installation Operation**
Outside Handle Play Check (Refer to P.42-40.)

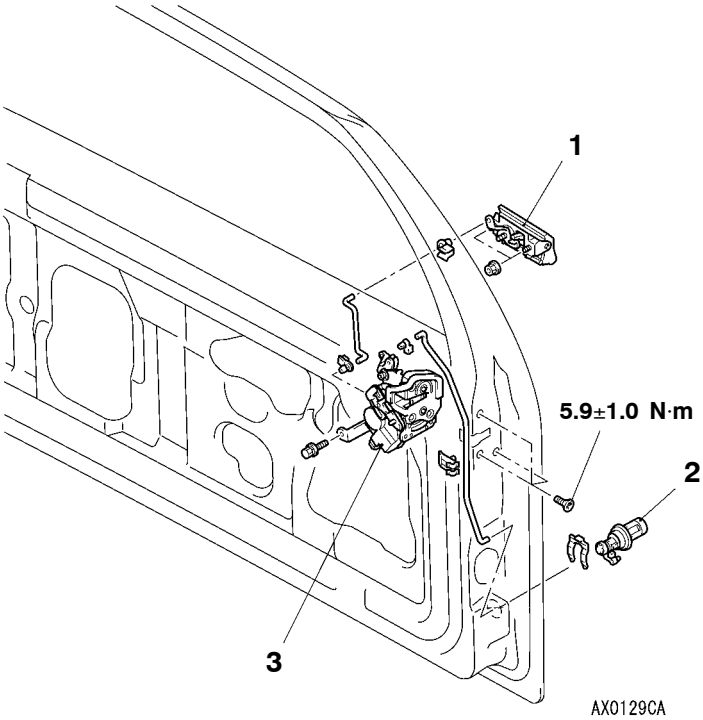


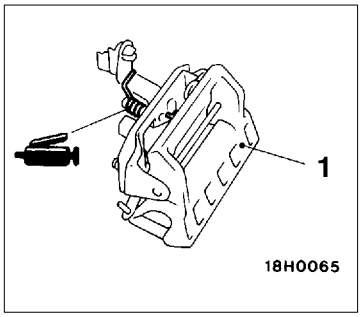


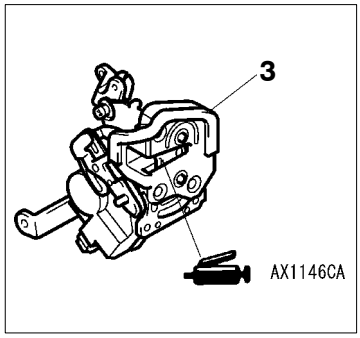


**Back door handle and lock key cylinder removal steps**

- Back door trim and waterproof film (Refer to P.42-43.)
- Back door garnish (Refer to GROUP 51.)

1. Back door handle
2. Back door lock key cylinder

**Back door latch removal steps**

- Back door trim and waterproof film (Refer to P.42-43.)

3. Back door latch assembly

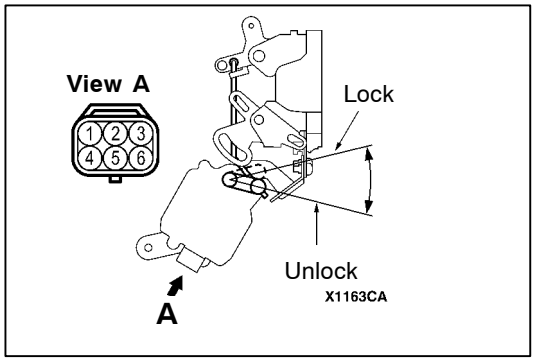


## INSPECTION

### BACK DOOR LOCK ACTUATOR CHECK

| Rod position | Terminal No. | | Rod operation |
|---|---|---|---|
| | 2 | 3 | |
| LOCK | ⊖ | ⊕ | LOCK to UNLOCK |
| UNLOCK | ⊕ | ⊖ | UNLOCK to LOCK |

Purchased from www.WorkshopManuals.co.uk

www.WorkshopManuals.co.uk

# KEYLESS ENTRY SYSTEM

## TROUBLESHOOTING

The keyless entry system is controlled by the Smart Wiring System (SWS). For troubleshooting, refer to GROUP 54B - Troubleshooting.

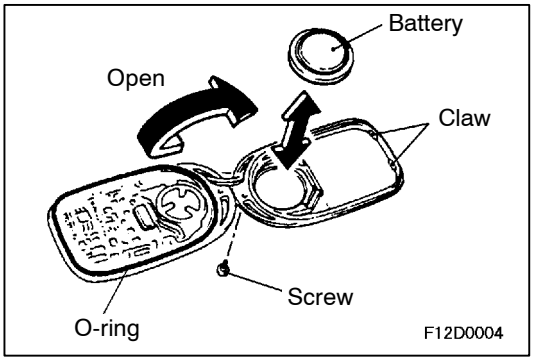


## ON-VEHICLE SERVICE

### HOW TO REPLACE A BATTERY OF THE TRANSMITTER

1. Remove the set screw to remove the battery from the transmitter.
2. Install a battery with its (+) side face-down.

   **Battery required for replacement:**
   **Coin type battery CR2032**
3. Insert the claw first, and with care not to displace the O-ring, assemble the transmitter.
4. Check to see if the keyless entry system operates.

   NOTE
   (1) Do not let water or dust stick to the inside of the transmitter when it is open. Also, do not touch the precision electronic device.
   (2) If the O-ring is displaced during the assembly of the transmitter, water or dust penetrates in it causing trouble.

### ENCRYPTED CODE REGISTRATION METHOD

Each individual encrypted code is registered inside the transmitter, and so it is necessary to register these codes with the EEPROM inside the ETACS-ECU in the following cases.

- When either the transmitter or ETACS-ECU is replaced;
- If a second transmitter is to be used;
- If it appears that a problem is occurring because of faulty registration of a code.

A maximum of four different codes can be stored in the memory area of the EEPROM (four different transmitters can be used). When the code for the first transmitter is registered, the previously-registered codes for four transmitters are cleared. Therefore, if you are using more than two transmitters or are adding a second transmitter, the codes for all the transmitters must be registered at the same time.

1. Check that the doors lock normally when the ignition key is inserted into the door key cylinder and turned.
2. Insert the ignition key in the ignition switch.
3. Connect the MUT-II to the diagnosis connector.

Purchased from www.WorkshopManuals.co.uk

www.WorkshopManuals.co.uk

NOTE
This sets the system in encrypted code registration standby mode. If MUT-II is not used, connect terminal No.1 of the diagnosis connector to earth.

**Caution**
**Always turn the ignition switch to LOCK (OFF) position before connecting and disconnecting the MUT-II or earth.**

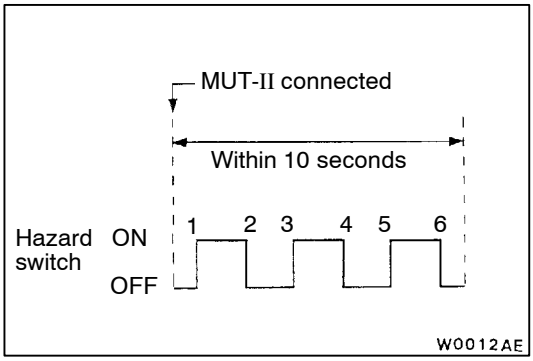


4. Within 10 seconds after connecting the MUT-II or earth, press the hazard switch six times.

   NOTE
   (1) The doors will lock and unlock once after pressing the hazard switch six times, and the system will switch to registration mode.
   (2) The hazard switch alternates between ON and OFF each time pressing the hazard switch (Refer to illustration).
5. Press the lock switch or unlock switch of the transmitter switch, and then press it two times within 10 seconds of the first press. This will register the code.
6. After registration is completed, the doors will be automatically locked and unlocked once.
7. If you are using more than two transmitters or have added a second transmitter, the same registration procedure should be carried out for the remaining transmitters, and it should be carried out within one minute after registration of the code for the first transmitter has been completed. The registration procedure are all the same for all transmitters.
8. Registration mode will be terminated under the following conditions.
   - When the encrypted codes for four transmitters have been registered;
   - When one minute has passed after registration mode started;
   - When the MUT-II is disconnected (earth is released);
   - When the ignition key is removed;
9. After registration mode has been completed, carry out the followings to make sure that the keyless entry system operates.
   - Pull the ignition key out.
   - Close all of the doors.

# KEYLESS ENTRY SYSTEM

## REMOVAL AND INSTALLATION

For the removal and installation of the ETACS-ECU, refer to GROUP 54A.

Purchased from www.WorkshopManuals.co.uk

www.WorkshopManuals.co.uk

# SUNROOF

## SERVICE SPECIFICATION

| Items | Standard value |
|---|---|
| Roof lid glass operating current A (at 20°C) | 7 or less |

## TROUBLESHOOTING

The sunroof is controlled by the SWS (Smart Wiring System). For troubleshooting procedures, refer to GROUP 54B - SWS Diagnosis.

## ON-VEHICLE SERVICE

### WATER TEST

Check if there are any leaks in the sunroof by the following procedure.

1. Fully close the roof lid glass.
2. Adjust the water pressure so that water comes out of the hose to a height of approximately 50 cm when the hose is held vertically facing upwards.

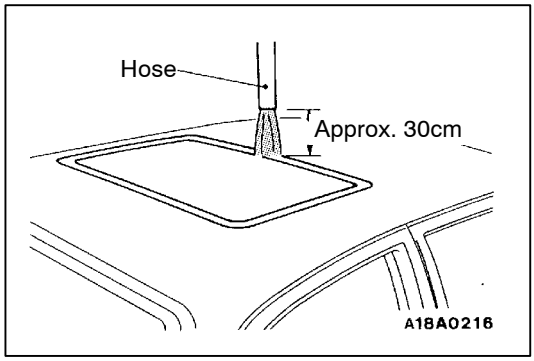


3. Hold the end of the hose approximately 30 cm above the roof and let the water run onto the weatherstrip for 5 minutes or more.
4. While letting the water run onto the weatherstrip, check that there is no water leaking into the passenger compartment.

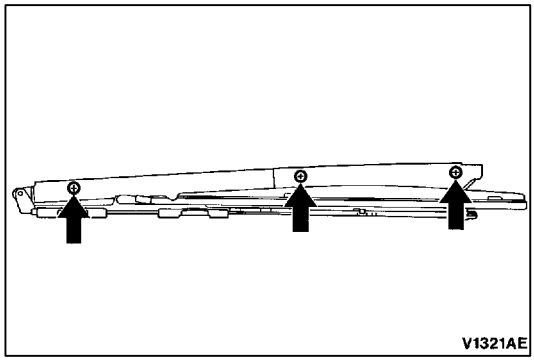


### SUNROOF FIT ADJUSTMENT

1. Fully close the roof lid glass.
2. Fully open the sunshade.
3. Loosen the roof lid glass assembly mounting screws, and then slide the roof lid glass assembly along the slot in the mechanism assembly to adjust the height of the roof lid glass.
4. After adjustment, check to be sure that the sunroof operates smoothly.

Purchased from www.WorkshopManuals.co.uk

www.WorkshopManuals.co.uk

# SUNROOF

## REMOVAL AND INSTALLATION

**Post-installation Operation**
- Sunroof Water Test (Refer to P.42-47.)
- Sunroof Fit Adjustment (Refer to P.42-47.)

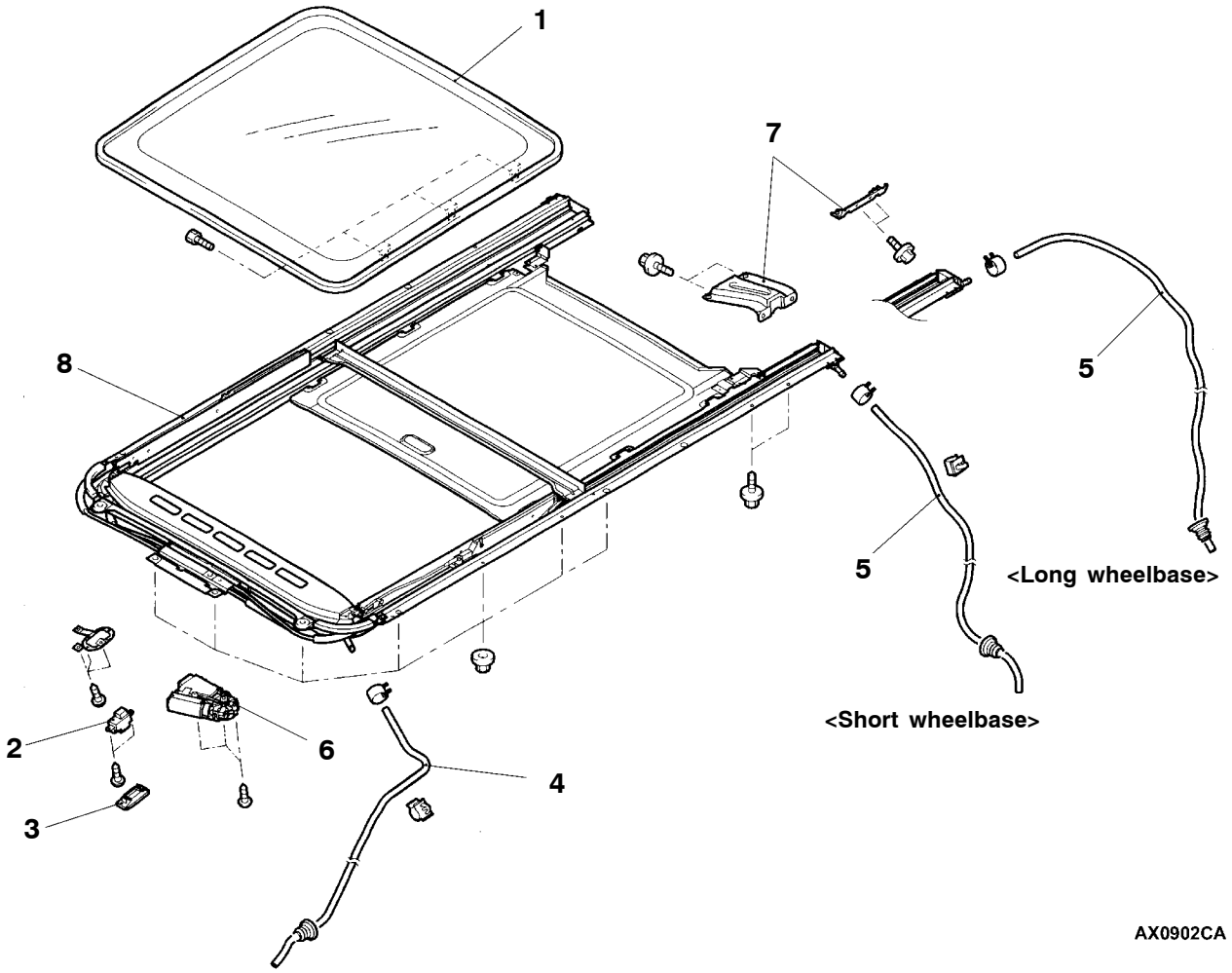


1. Roof lid glass assembly

**Sunroof switch removal steps**

2. Sunroof switch cover
3. Sunroof switch

**Drain hose removal steps**

- Headlining
- Rear mudguard (Rear drain hose)
- instrument panel assembly (Refer to GROUP 52A.)

◀A▶ ▶A◀ 4. Drain hose (Front side)
- Pillar duct (passenger's side) (Refer to GROUP 55.)
- Rear quarter duct (passenger's side) (Refer to GROUP 55.)

◀A▶ ▶A◀ 5. Drain hose (Rear side)

**Sunroof motor assembly removal steps**

- Headlining

◀B▶ ▶B◀ 6. Sunroof motor assembly

**Sunroof assembly removal steps**

- Headlining

◀A▶ ▶A◀ 4. Drain hose (Front side)
- Pillar duct (passenger's side) (Refer to GROUP 55.)
- Rear quarter duct (passenger's side) (Refer to GROUP 55.)

◀A▶ ▶A◀ 5. Drain hose (Rear side)
7. Set bracket
8. Sunroof assembly

Purchased from www.WorkshopManuals.co.uk

www.WorkshopManuals.co.uk

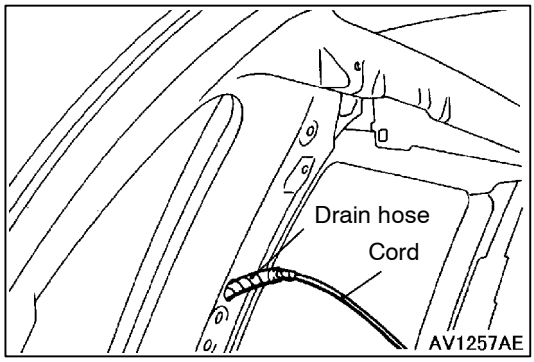


## REMOVAL SERVICE POINTS

### ◀A▶ DRAIN HOSE REMOVAL

Tie a cord to the end of the drain hose, and wind tape around it so that there is no unevenness. Then pull the drain hose out from the passenger compartment.

### ◀B▶ SUNROOF MOTOR ASSEMBLY REMOVAL

**Caution**
**Always close the roof lid glass fully before removing the sunroof motor. If the fully-closed positions of the roof lid glass and the sunroof motor are not the same, the sunroof will not operate properly.**

NOTE
If there is a problem with the sunroof motor so that the roof lid glass cannot close fully, use an Allen key to turn the gear section of the sunroof motor to fully close the roof lid glass.

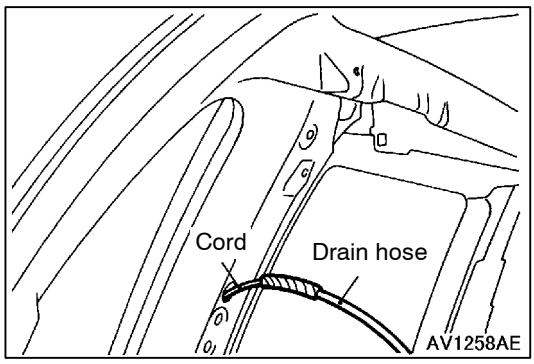


## INSTALLATION SERVICE POINTS

### ▶A◀ DRAIN HOSE INSTALLATION

1. Tie the cord that was used during removal to the end of the drain hose, and wind tape around it so that there is no unevenness.
2. Pull the cord to pull through the drain hose

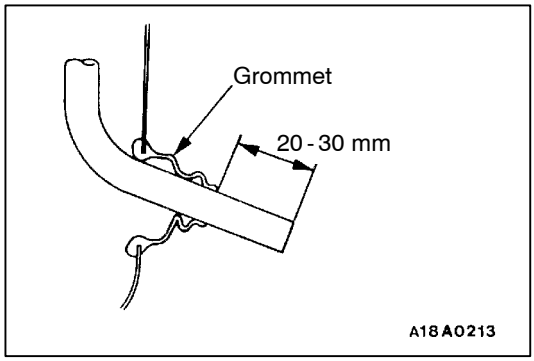


3. Install the grommet, and then position the drain hose so that it protrudes from the grommet as shown in the illustration.

Purchased from www.WorkshopManuals.co.uk

www.WorkshopManuals.co.uk

### ▶B◀ SUNROOF MOTOR ASSEMBLY INSTALLATION

<INSTALLATION OF REMOVED MOTOR ASSEMBLY>

1. Install the roof lid glass assembly and the sunroof motor assembly with the sunroof motor assembly in the fully-closed position.
2. Connect the sunroof motor assembly harness connector and the sunroof switch harness connector to the vehicle wiring harness connector.
3. Operate the sunroof and check that it operates correctly.

<ACCESSORY (NEW) SUNROOF MOTOR ASSEMBLY INSTALLATION>

1. Install the roof lid glass assembly and the sunroof motor assembly with the sunroof motor assembly in the fully-closed position.
2. Connect the sunroof motor assembly harness connector and the sunroof switch harness connector to the vehicle wiring harness connector.
3. Operate the sunroof switch to slide the roof lid glass to the fully-open position, and then tilt it up in steps of 30 mm to the fully-open position and then keep pressing the switch for 3 seconds or more.
4. Operate the sunroof switch (CLOSE) using the one-touch function to slide the roof lid glass to the fully-closed position.
5. Operate the sunroof switch (OPEN) using the one-touch function to slide the roof lid glass to the fully-open position.
6. Operate the sunroof switch (CLOSE) using the one-touch function to slide the roof lid glass to the fully-closed position.
7. Press the tilt-up switch to operate the sunroof and check that learning is complete.
   NOTE
   (1) During initialisation (learning mode), use only the CLOSE/DOWN switch to move the roof lid glass from the fully-closed position to the fully tilted open position. During initialisation, the TILT UP switch will not work when pressed. Furthermore, the sunroof-ECU will stop running in learning mode as soon as the roof lid glass is tilted up.
   (2) When the clamping prevention mechanism is cancelled, the operation is the same as when the roof lid glass operates 30 mm at a time.

Purchased from www.WorkshopManuals.co.uk

www.WorkshopManuals.co.uk

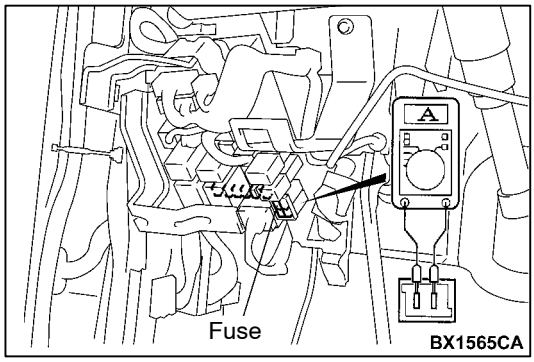


## INSPECTION

### ROOF LID GLASS OPERATION CURRENT CHECK

1. Remove the sunroof fuse and connect a circuit analyser as shown in the illustration.
2. Press the sunroof switch to operate the sunroof, and then measure the operation current while the roof lid glass is moving (except when the sunroof starts to operate, when it is fully open, when it is fully closed and when it is fully tilted up).

   **Standard value: 7 A or less (at 20°C)**
3. If the operation current is not within the standard value, check the following points.
   - Installation condition, warping or jamming of sunroof assembly
   - Sticking of drive cable
   - Tilt of roof lid glass

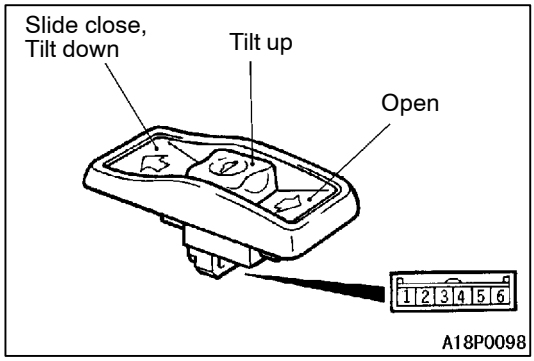


### SUNROOF SWITCH CONTINUITY CHECK

| Switch position | Terminal No. | | | |
|---|---|---|---|---|
| | 3 | 4 | 5 | 6 |
| Open | | ○ | ○ | |
| Off | | | | |
| Tilt up | ○ | ○ | | |
| Slide close, Tilt down | | ○ | | ○ |

Purchased from www.WorkshopManuals.co.uk

www.WorkshopManuals.co.uk

## DISASSEMBLY AND REASSEMBLY

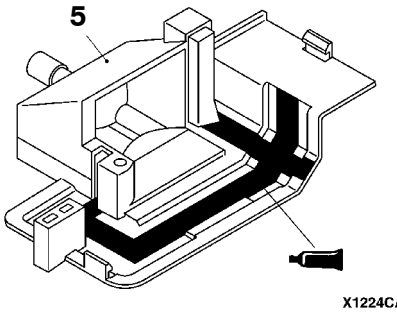


**Sealant:**
**3M ATD Part No. 8531 or 8646 Auto Sealant or equivalent**

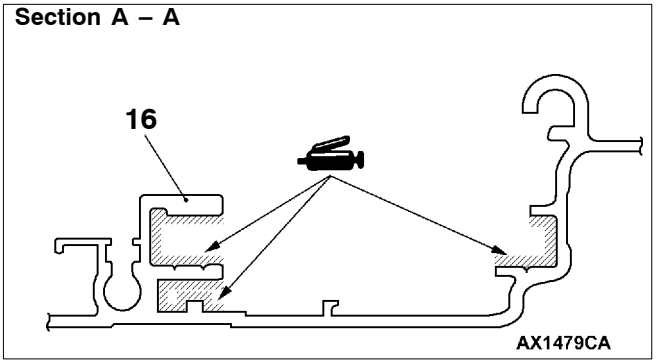


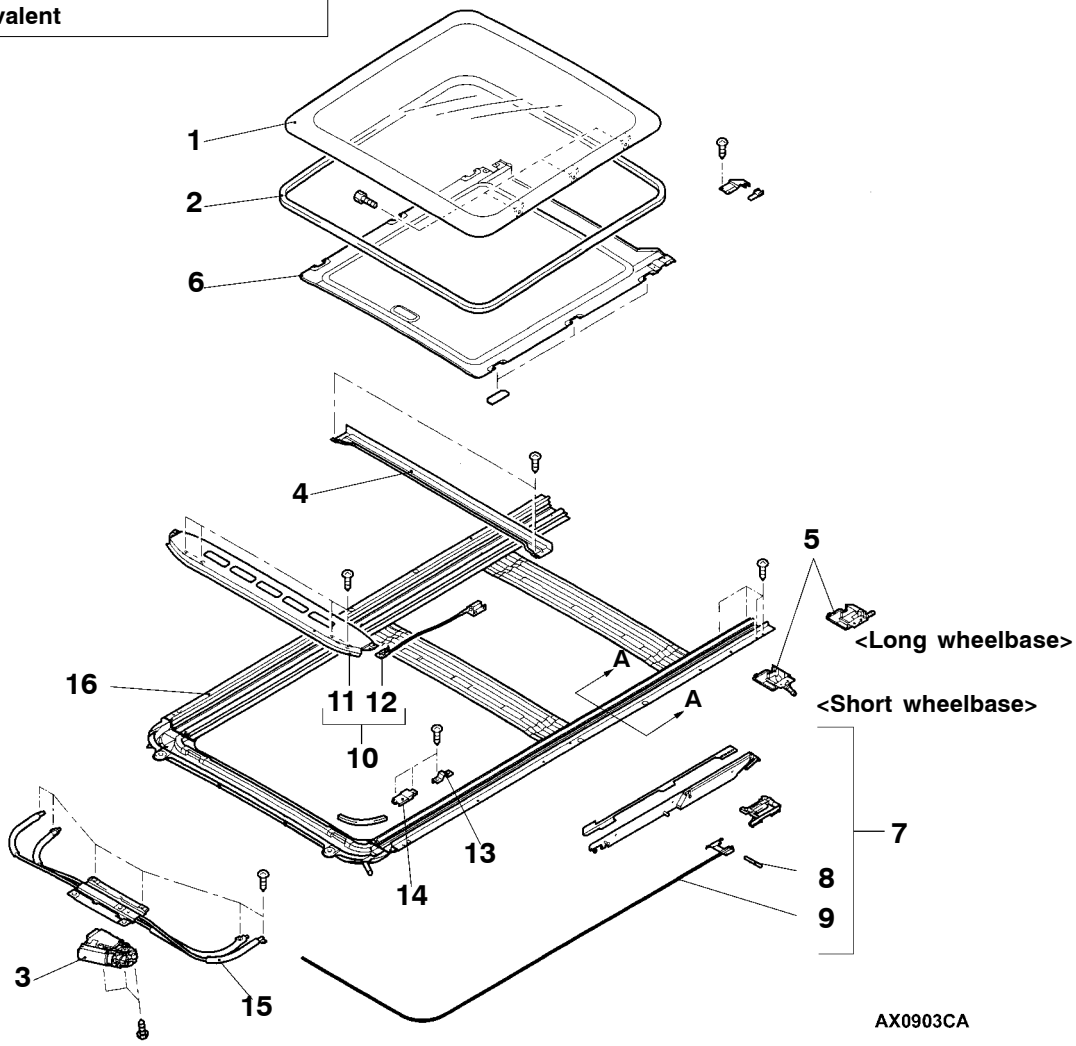


**Disassembly steps**

1. Roof lid glass assembly
2. Weatherstrip
3. Sunroof motor
4. Roof drip channel
5. Rear drip assembly
6. Sun shade assembly
7. Drive cable assembly
8. ◀A▶ ▶A◀ Shaft
9. ◀A▶ Drive cable
10. ◀B▶ Roof window deflector panel assembly
11. ◀C▶ Deflector
12. ◀C▶ Deflector link
13. Set plate
14. Front cover
15. Cable guide casing
16. Guide rail sub-assembly

Purchased from www.WorkshopManuals.co.uk

www.WorkshopManuals.co.uk

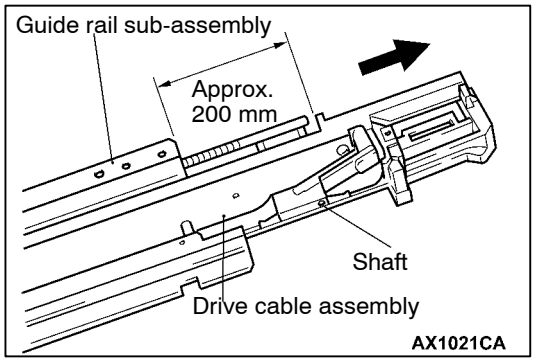


## DISASSEMBLY SERVICE POINTS

### ◀A▶ SHAFT/DRIVE CABLE REMOVAL

After pulling out the drive cable assembly as shown in the illustration, remove the shaft and the drive cable.

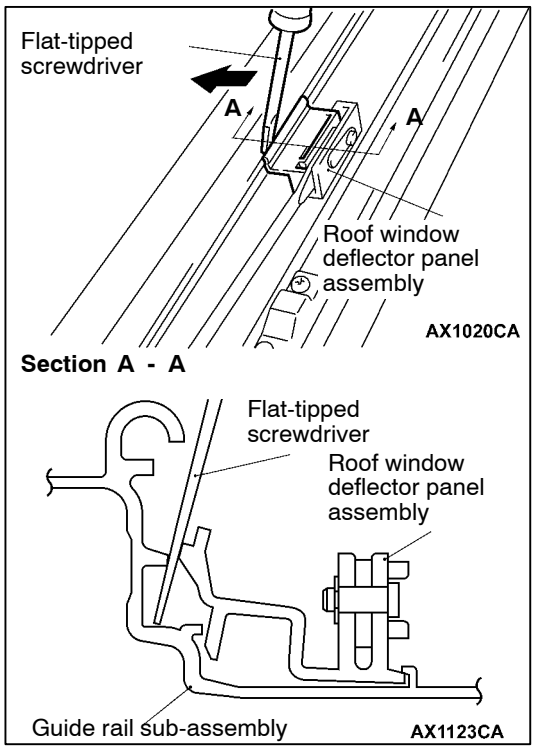


### ◀B▶ ROOF WINDOW DEFLECTOR PANEL ASSEMBLY REMOVAL

Twist a flat-tipped screwdriver or similar tool as shown in the illustration to remove the roof window deflector panel assembly.

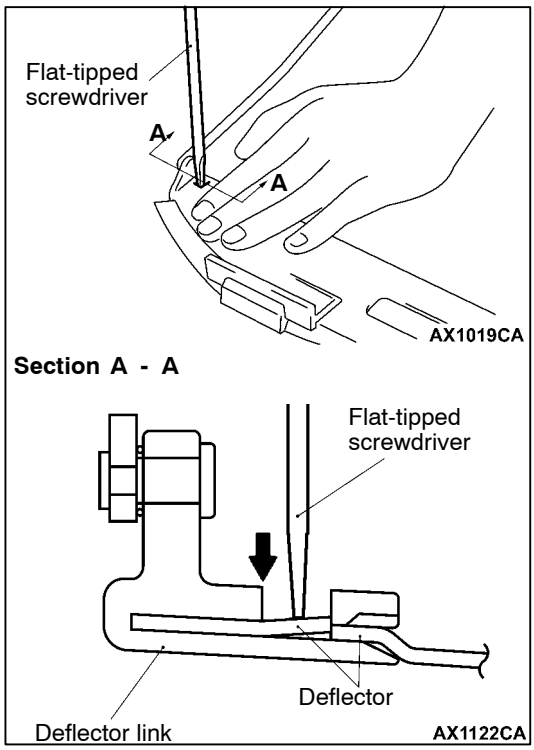


### ◀C▶ DEFLECTOR/DEFLECTOR LINK REMOVAL

Use a flat-tipped screwdriver or similar tool to separate the deflector and the deflector panel as shown in the illustration.

Purchased from www.WorkshopManuals.co.uk

www.WorkshopManuals.co.uk

## REASSEMBLY SERVICE POINT

### ▶A◀ SHAFT INSTALLATION

Working outside the vehicle, install the shaft to the drive cable according to the procedure below.

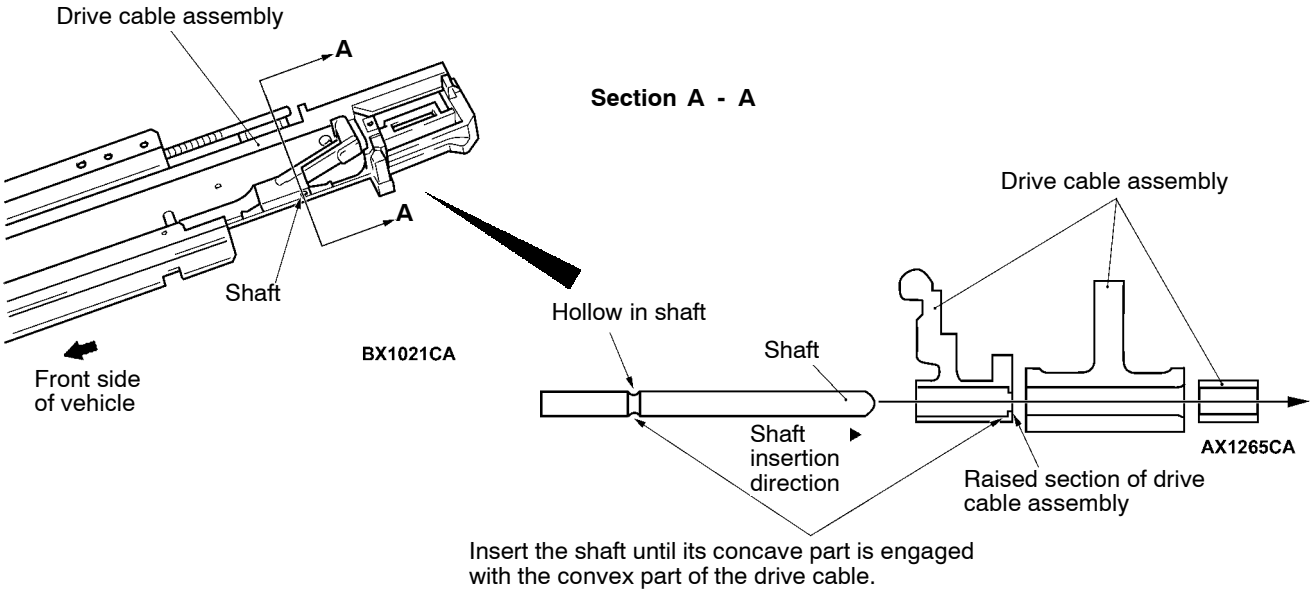


Purchased from www.WorkshopManuals.co.uk

www.WorkshopManuals.co.uk

# EXTERIOR

**Click on the applicable bookmark to selected the required model year.**

Purchased from www.WorkshopManuals.co.uk

www.WorkshopManuals.co.uk


# EXTERIOR

## CONTENTS

FRONT BUMPER . . . . . 3
ADHESIVE . . . . . 3
SPECIAL TOOL . . . . . 3
FRONT BUMPER . . . . . 4
REAR BUMPER . . . . . 8
ROOF RAIL . . . . . 11
MOULDING . . . . . 11
ADHESIVE . . . . . 11
SPECIAL TOOL . . . . . 11
MOULDING . . . . . 12
GARNISH . . . . . 16
ADHESIVE . . . . . 16
GARNISH . . . . . 17
MUDGUARD . . . . . 19
ADHESIVE . . . . . 19
MUDGUARD . . . . . 19
REAR DEFLECTOR . . . . . 21
SPECIAL TOOL . . . . . 21
REAR DEFLECTOR . . . . . 21
SIDE STEP . . . . . 22
SIDE STEP . . . . . 22
WINDSHIELD WIPER AND WASHER . . . . 23
SERVICE SPECIFICATIONS . . . . . 23
TROUBLESHOOTING . . . . . 23
WINDSHIELD WIPER AND WASHER . . . 24
REAR WIPER AND WASHER . . . . . 28
REFERENCE VALUE . . . . . 28
TROUBLESHOOTING . . . . . 28
REAR WIPER AND WASHER . . . . . 28
HEADLAMP WASHER . . . . . 30
TROUBLESHOOTING . . . . . 31
HEADLAMP WASHER . . . . . 31

CONTINUED ON NEXT PAGE

Purchased from www.WorkshopManuals.co.uk

www.WorkshopManuals.co.uk

WIPER DEICER ..... 32
SPECIAL TOOL ..... 32
WIPER DEICER ..... 33
MARKS ..... 35
MARKS ..... 35
OUTSIDE DOOR MIRROR ..... 36
SPECIAL TOOL ..... 36
TROUBLESHOOTING ..... 36
OUTSIDE DOOR MIRROR ..... 37

Purchased from www.WorkshopManuals.co.uk

www.WorkshopManuals.co.uk

# FRONT BUMPER

## ADHESIVE

| Items | Specified sealant and adhesive |
|---|---|
| Front bumper side extension | Double-sided tape [5 mm wide and 1.2 mm thick] |

## SPECIAL TOOL

| Tool | Number | Name | Use |
|---|---|---|---|
| 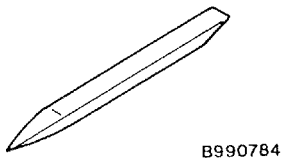  | MB990784 | Ornament remover | Front bumper reinforcement assembly removal |

Purchased from www.WorkshopManuals.co.uk

www.WorkshopManuals.co.uk

# FRONT BUMPER

## REMOVAL AND INSTALLATION

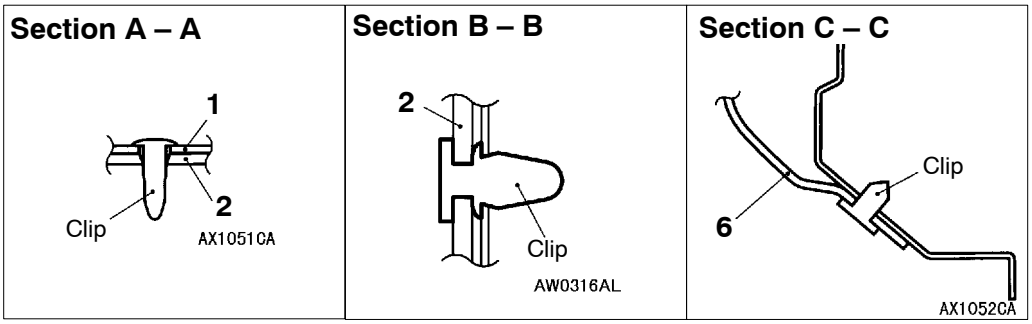


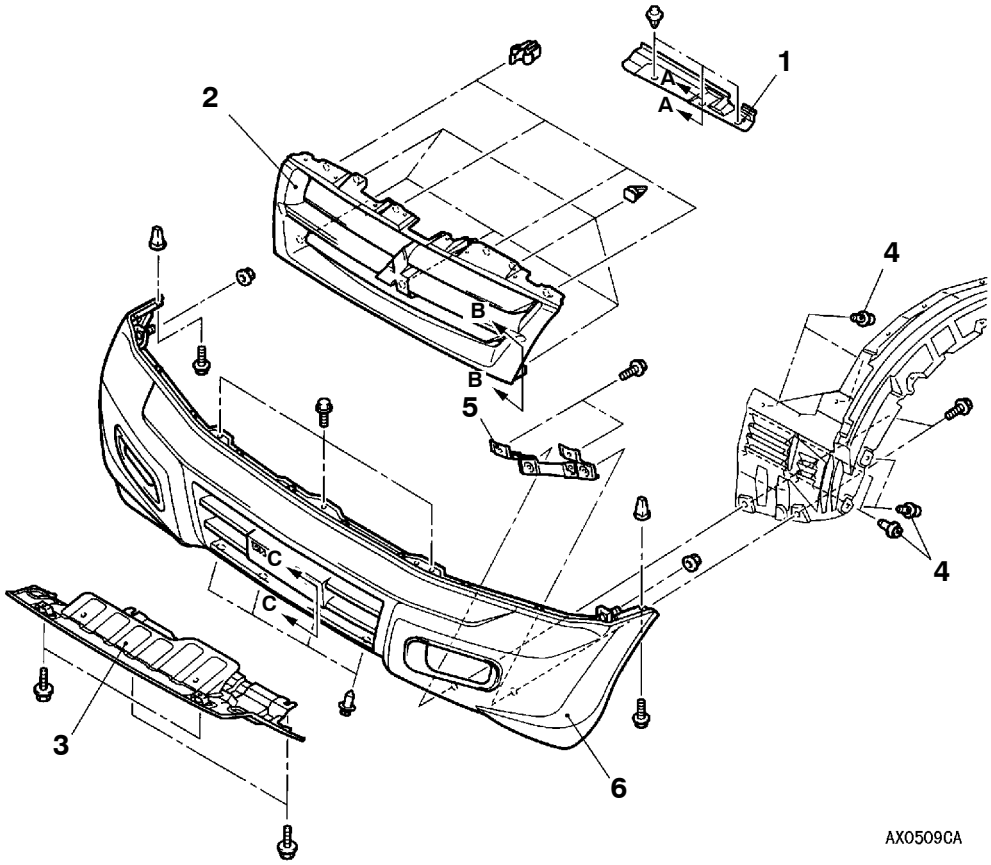


**Removal steps**

1. Radiator cover
2. Radiator grille
3. Skid plate
4. Splash shield mounting clip

◀A▶

5. Front bumper lower stay
   - Fog lamp connector connection
6. Front bumper face assembly

Purchased from www.WorkshopManuals.co.uk

www.WorkshopManuals.co.uk

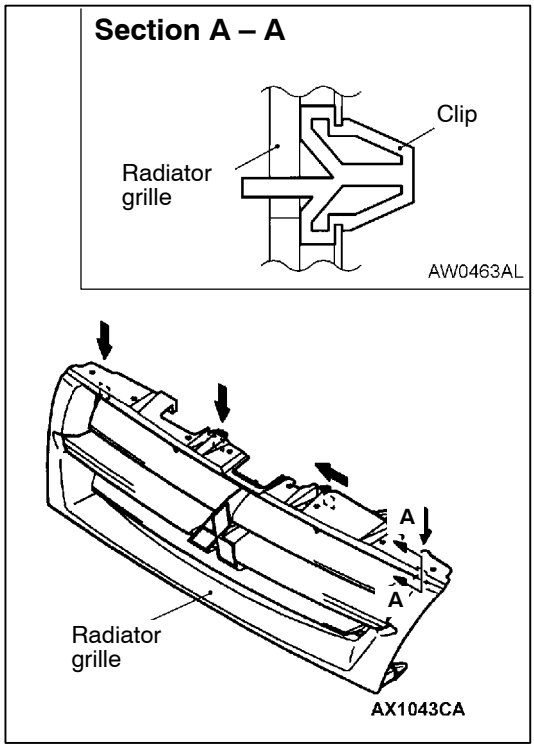


## REMOVAL SERVICE POINT

**◀A▶ RADIATOR GRILLE REMOVAL**

While pulling the radiator grille gently towards you, push the tabs of the clip in the direction of the arrow with a flat-tipped screwdriver to remove the radiator grille.

Purchased from www.WorkshopManuals.co.uk

www.WorkshopManuals.co.uk

## DISASSEMBLY AND REASSEMBLY

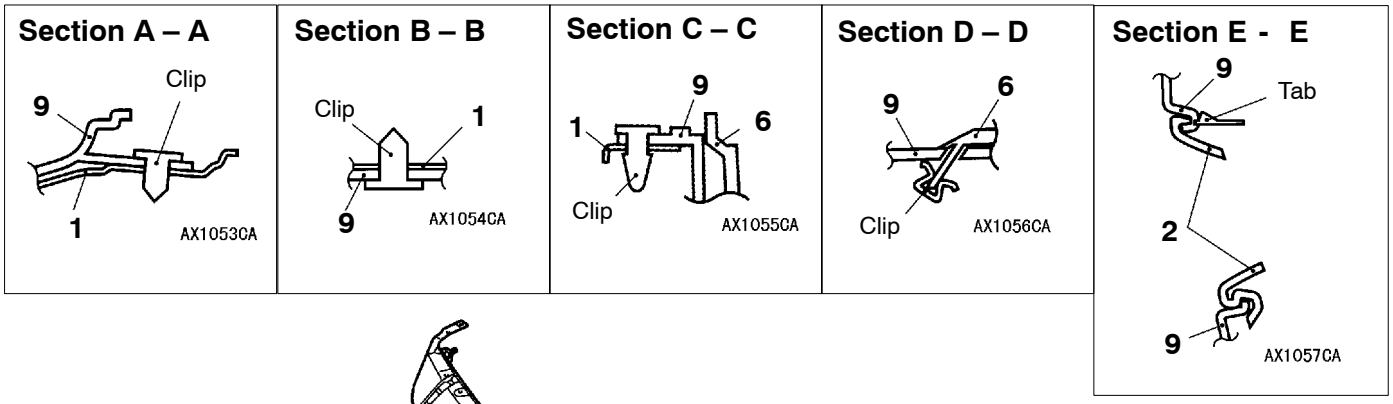


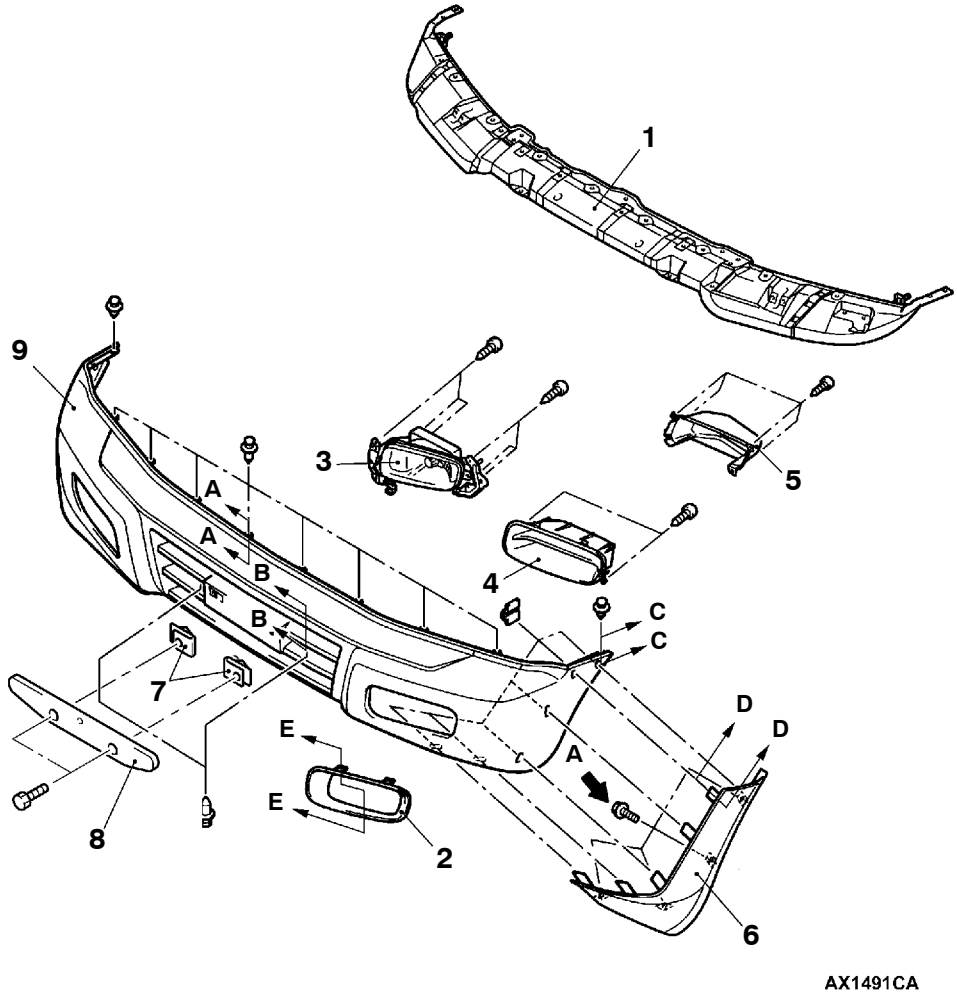


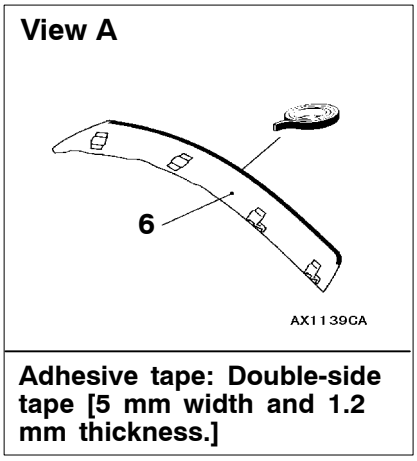


**Adhesive tape: Double-side tape [5 mm width and 1.2 mm thickness.]**

**Disassembly steps**

- Headlamp washer

◀A▶
1. Front bumper reinforcement assembly
2. Fog lamp cover
3. Fog lamp
4. Air blower garnish <Vehicles without fog lamps>
5. Air duct <LH side in vehicles without fog lamps>

◀B▶ ▶A◀
6. Front bumper side extension
7. Licence plate garnish
8. Licence plate bracket
9. Front bumper face

Purchased from www.WorkshopManuals.co.uk

www.WorkshopManuals.co.uk

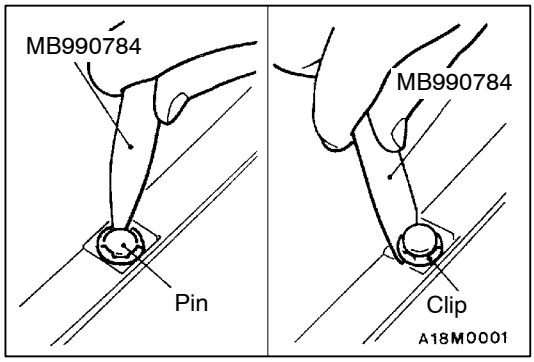


## DISASSEMBLY SERVICE POINTS

### ◀A▶ FRONT BUMPER REINFORCEMENT ASSEMBLY REMOVAL

1. Use the special tool to lift up the pin in the centre of the clip.
2. Remove the clip.

### ◀B▶ FRONT BUMPER SIDE EXTENSION REMOVAL

Remove by the same procedure as given in FRONT DOOR MOULDING, FRONT WHEEL CUT MOULDING, REAR WHEEL CUT MOULDING AND REAR DOOR MOULDING REMOVAL. (Refer to P.51-14.)

## REASSEMBLY SERVICE POINT

### ▶A◀ FRONT BUMPER EXTENSION INSTALLATION

Install by the same procedure as given in FRONT DOOR MOULDING, FRONT WHEEL CUT MOULDING, REAR WHEEL CUT MOULDING AND REAR DOOR MOULDING INSTALLATION. (Refer to P.51-14.)

Purchased from www.WorkshopManuals.co.uk

www.WorkshopManuals.co.uk

# REAR BUMPER

## REMOVAL AND INSTALLATION

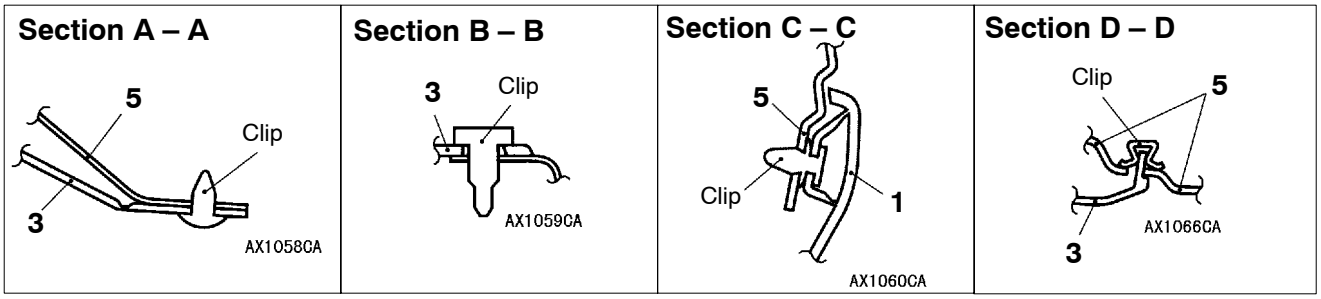


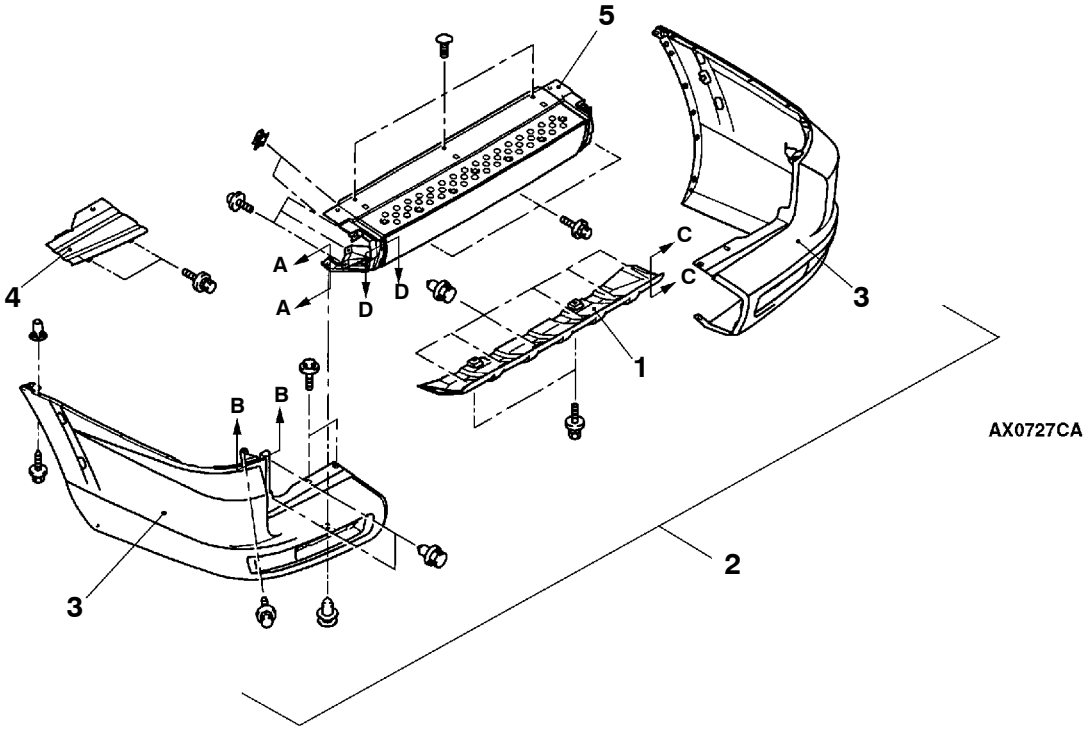


**Rear bumper assembly removal steps**

1. Rear bumper center lower face
2. Rear bumper assembly

**Rear bumper side face assembly removal steps**

1. Rear bumper center lower face
3. Rear bumper side face assembly
4. Rear bumper side reinforcement

**Rear bumper center face assembly removal steps**

1. Rear bumper center lower face
3. Rear bumper side face assembly
5. Rear bumper center face assembly

Purchased from www.WorkshopManuals.co.uk

www.WorkshopManuals.co.uk

## DISASSEMBLY AND REASSEMBLY

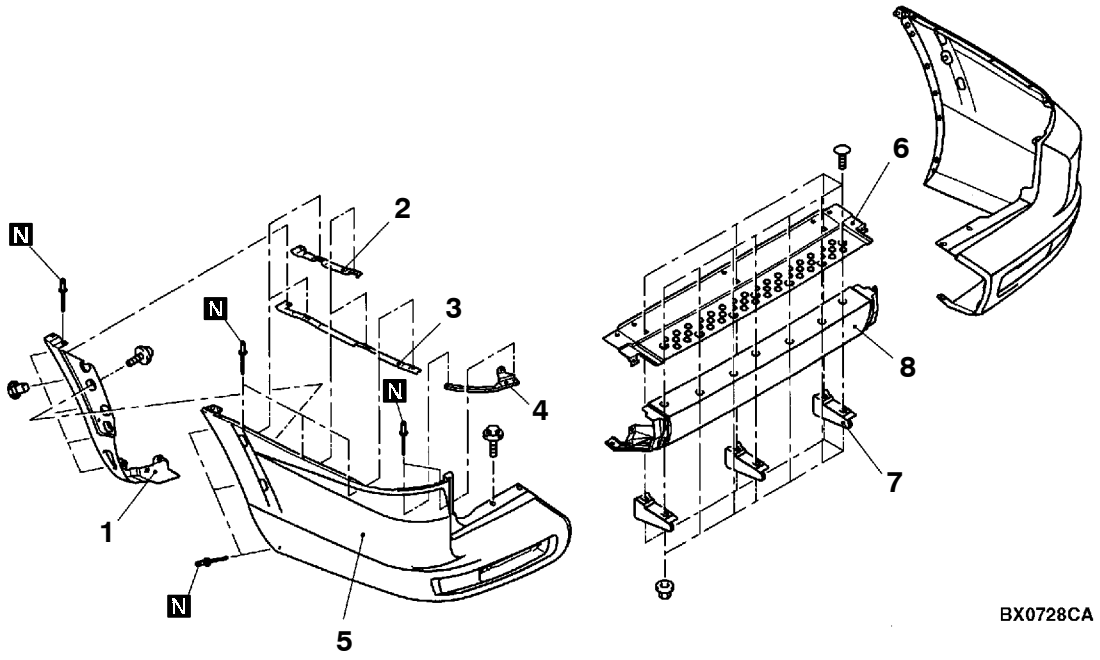


**Rear bumper side face assembly disassembly steps**

◀A▶ ▶A◀ 1. Rear mudguard reinforcement
◀A▶ ▶A◀ 2. Rear bumper side retainer (Short wheelbase)
◀A▶ ▶A◀ 3. Rear bumper side retainer (Long wheelbase)
◀A▶ ▶A◀ 4. Rear bumper corner bracket
- Rear lamp and rear lamp bracket (Refer to GROUP 54A.)

5. Rear bumper side face

**Rear bumper center face assembly disassembly steps**

6. Rear bumper step plate
7. Rear bumper center face stay
8. Rear bumper center face

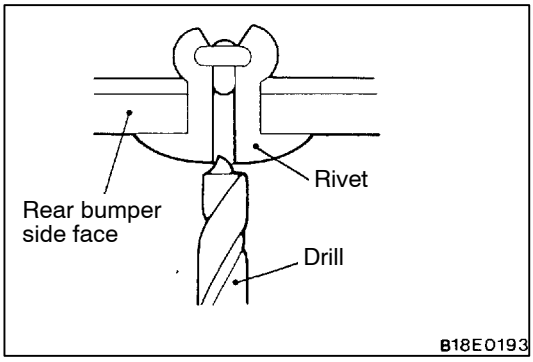


## DISASSEMBLY SERVICE POINT

### ◀A▶ REAR MUDGUARD REINFORCEMENT, REAR BUMPER SIDE SILL RETAINER AND REAR BUMPER CORNER BRACKET REMOVAL

Use a drill (4.5 mm diameter) to make a hole in the rivet to break it, and then remove the rivet.

Purchased from www.WorkshopManuals.co.uk

www.WorkshopManuals.co.uk

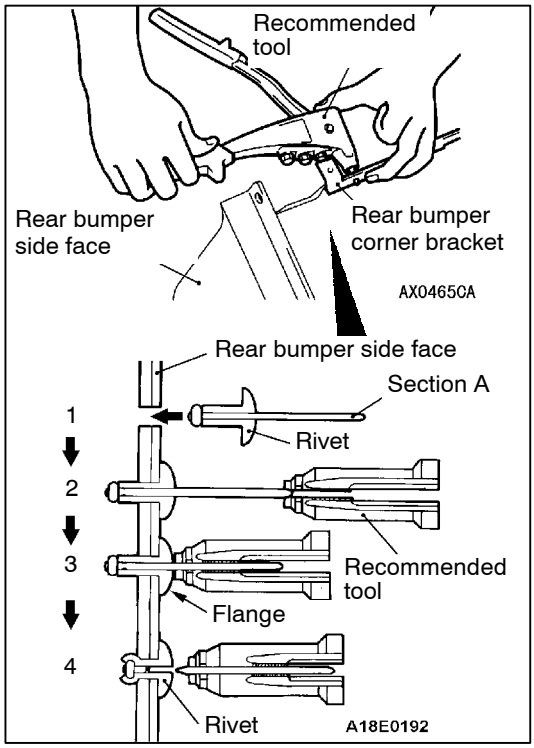


## REASSEMBLY SERVICE POINT

### ▶A◀ REAR MUDGUARD REINFORCEMENT, REAR BUMPER SIDE SILL RETAINER AND REAR BUMPER CORNER BRACKET INSTALLATION

Use the recommended tool shown in the illustration to connect the rivet by the following procedure.

1. Insert the rivet into the base material (rear bumper side face, rear mudguard reinforcement, rear bumperside reinforcement or rear bumper corner bracket).
2. Place the recommended tool over section A of the rivet.
3. While pushing the flange surface of the rivet with the recommended tool, press the handle of the tool.
4. The thin part of section A of the rivet will break and the rivet will then be attached.

Purchased from www.WorkshopManuals.co.uk

www.WorkshopManuals.co.uk

# ROOF RAIL

## ROOF RAIL

### REMOVAL AND INSTALLATION

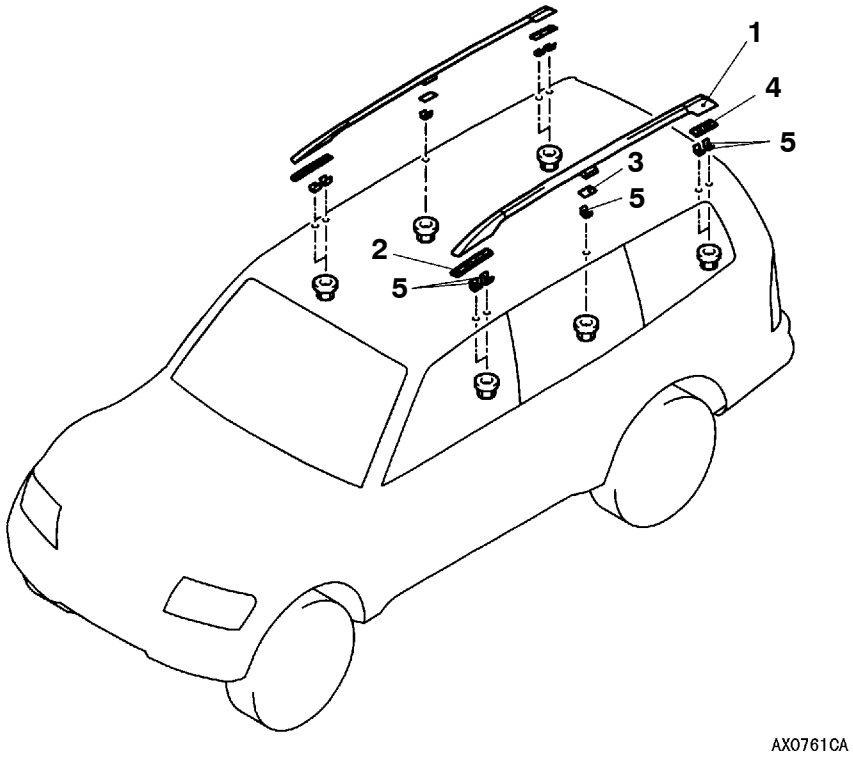


**Removal steps**

- Head lining
- Set bracket (Refer to GROUP 42 - Sunroof.)

1. Roof rail assembly
2. Roof rail front seal
3. Roof rail center seal
4. Roof rail rear seal
5. Roof rail seal

# MOULDING

## ADHESIVE

| Items | Specified sealant and adhesive |
|---|---|
| Wheel cut moulding and door moulding | Double-sided tape [ 4 mm width and 1.2 mm thickness, 12 mm width and 1.2 mm thickness, 5 mm width and 1.2 mm thicknes.] |

## SPECIAL TOOL

| Tools | No. | Name | Application |
|---|---|---|---|
| 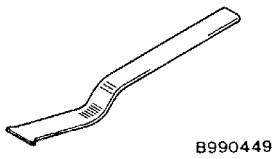  | MB990449 | Window moulding remover | Roof drip moulding removal |

Purchased from www.WorkshopManuals.co.uk

www.WorkshopManuals.co.uk

# MOULDING

## REMOVAL AND INSTALLATION

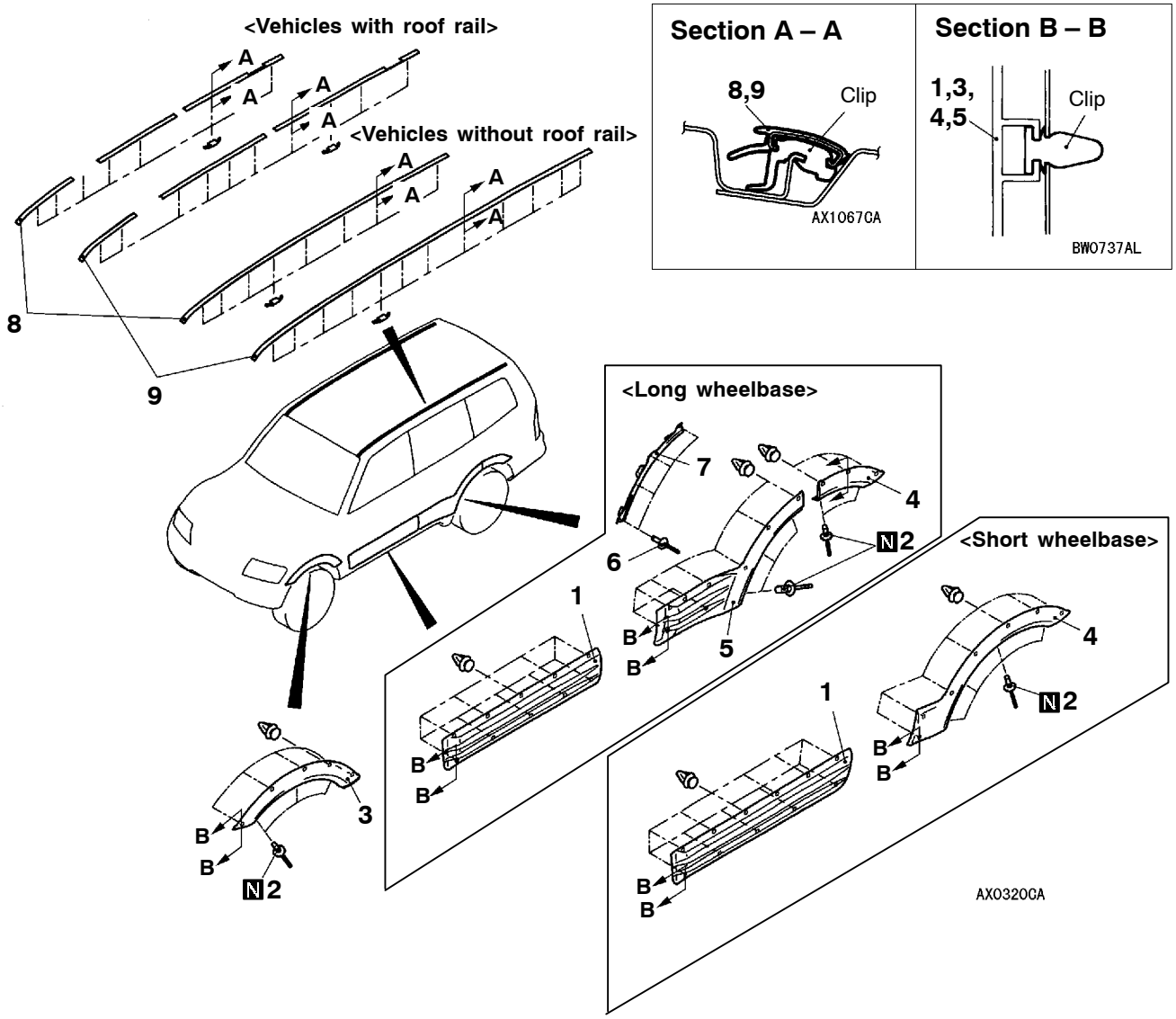


◀A▶ ▶A◀ 1. Front door moulding

**Front wheel cut moulding removal steps**

◀B▶ ▶B◀ 2. Rivet A
◀A▶ ▶A◀ 3. Front wheel cut moulding

**Rear wheel cut moulding removal steps**

◀B▶ ▶B◀ 2. Rivet A
◀A▶ ▶A◀ 4. Rear wheel cut moulding

**Rear door moulding removal steps**

◀B▶ ▶B◀ 2. Rivet A
◀A▶ ▶A◀ 5. Rear door moulding
◀B▶ ▶C◀ 6. Rivet B
◀A▶ ▶A◀ 7. Rear door moulding bracket

**Roof drip moulding removal steps**

- Roof rail assembly

◀C▶ 8. Roof drip moulding <Short wheelbase>
◀C▶ 9. Roof drip moulding <Long wheelbase>

Purchased from www.WorkshopManuals.co.uk

www.WorkshopManuals.co.uk

## Double-sided tape application locations

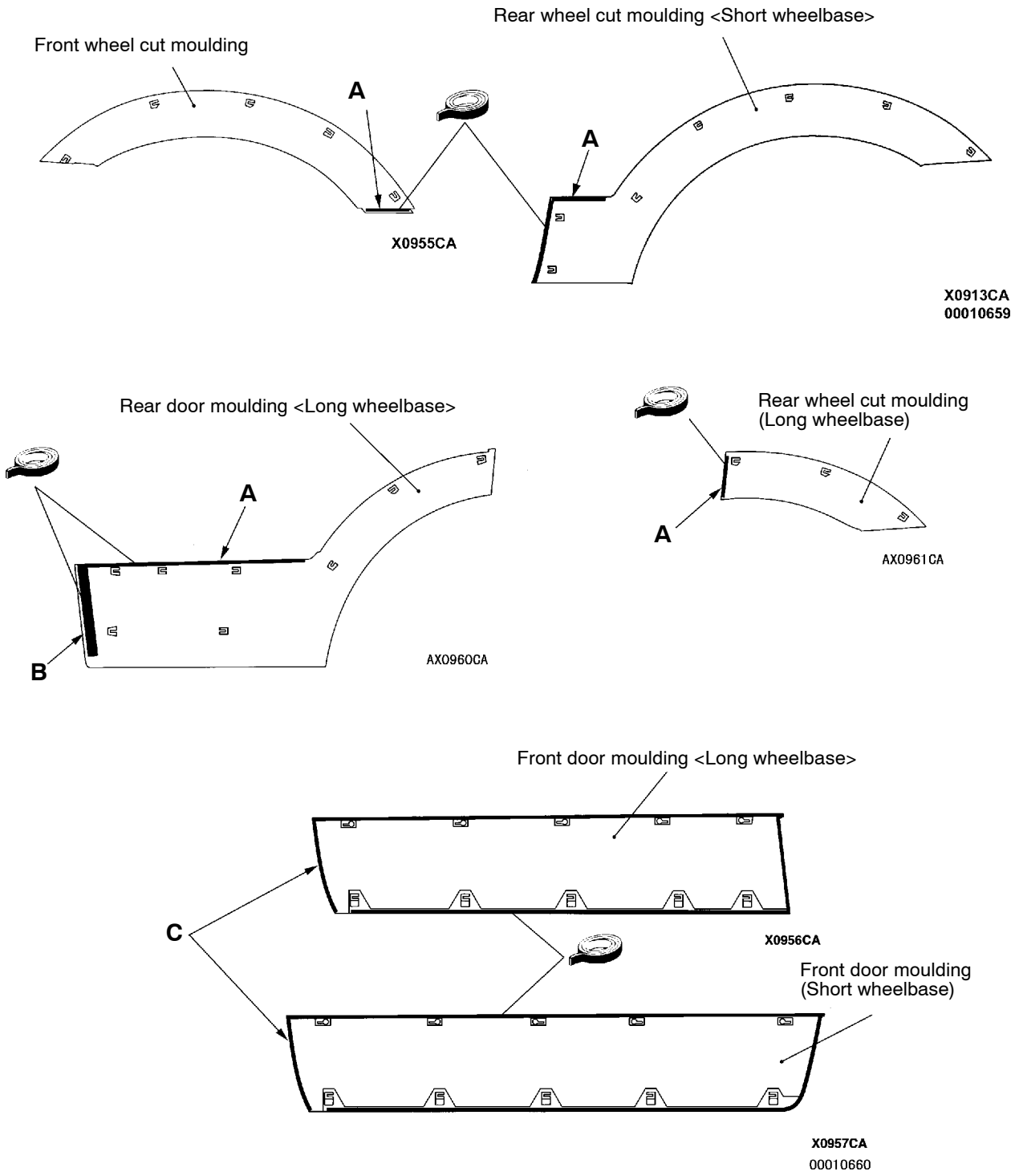


**Adhesive tape: Double-side tape [A: 4 mm width and 1.2 mm thickness, B: 12 mm width and 1.2 mm thickness, C: 5 mm width and 1.2 mm thickness.]**

Purchased from www.WorkshopManuals.co.uk

www.WorkshopManuals.co.uk

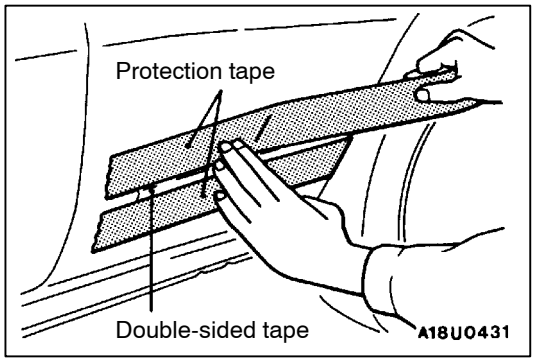


## REMOVAL SERVICE POINTS

### ◀A▶ FRONT DOOR MOULDING, FRONT WHEEL CUT MOULDING, REAR WHEEL CUT MOULDING AND REAR DOOR MOULDING REMOVAL

1. Attach protection tape all the way along the edges of the double-sided tape which is still adhering to the body.

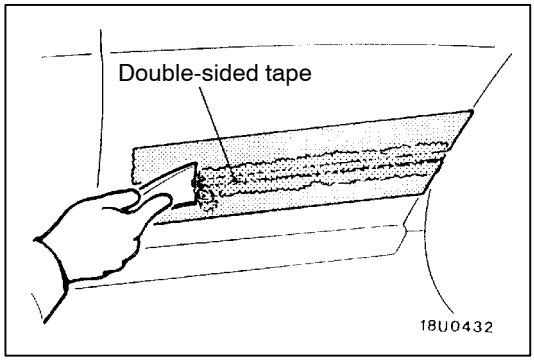


2. Use a resin spatula to scrape off the double-sided tape.
3. Peel off the protection tape.
4. Wipe the body surface and clean it with a rag moistened with isopropyl alcohol.

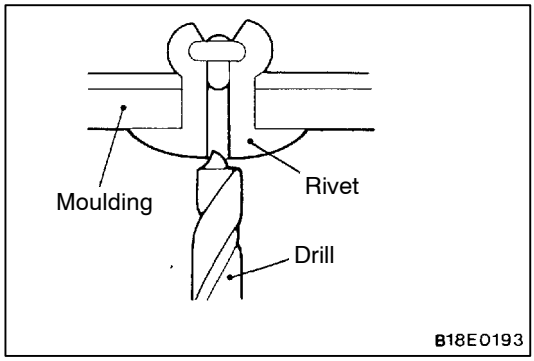


### ◀B▶ RIVET A AND B REMOVAL

Use a drill (with a 4.0 mm bit for rivet A, or a 6.5 mm bit for rivet B) to make a hole in the rivet to break it, and then remove the rivet.

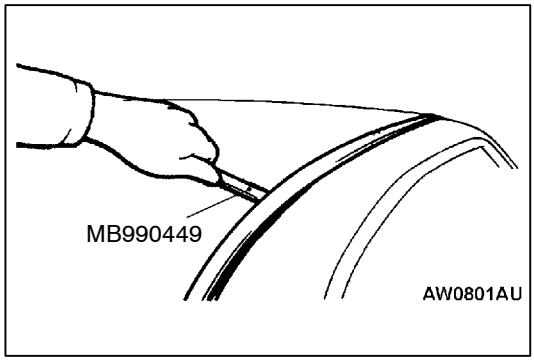


### ◀C▶ ROOF LID MOULDING REMOVAL

Use the special tool to remove the moulding from the rear of the vehicle by twisting it.

**Caution**
**If the moulding becomes deformed, it should not be re-used.**

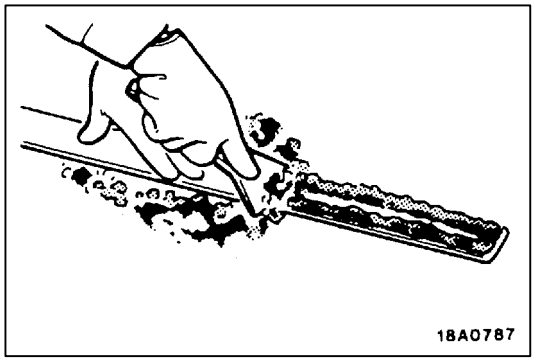


## INSTALLATION SERVICE POINTS

### ▶A◀ FRONT DOOR MOULDING, FRONT WHEEL CUT MOULDING, REAR WHEEL CUT MOULDING AND REAR DOOR MOULDING INSTALLATION

**Double-sided tape affixing to the protect moulding (when reusing)**

1. Scrape off the double-sided tape with a resin spatula or gasket scraper.

Purchased from www.WorkshopManuals.co.uk

www.WorkshopManuals.co.uk

2. Wipe off the moulding adhesion surface and clean it with a shop towel moistened with isopropyl alcohol.
3. Affix the specified double sided tape to the moulding. (Refer to P.51-13.)

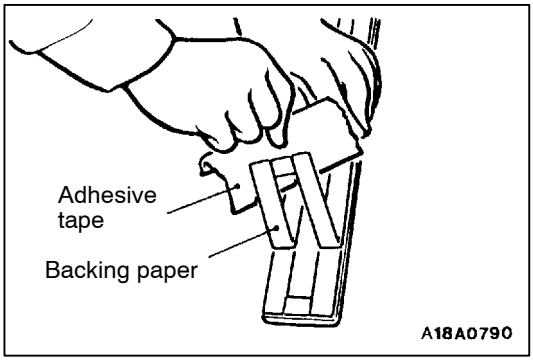


4. Remove strip paper from the pressure sensitive double-sided tape.

   NOTE
   Affix double-sided tape to the end of strip paper for ease of strip paper removal. (Refer to P.51-13.)
5. Install the moulding.

   NOTE
   If it is hard to affix the double-sided tape in winter, heat the application surfaces at both the vehicle body and the moulding.

   Body 40 - 60°C

   Moulding 20 - 30 °C

   Apply pressure fully to the moulding.

**▶B◀ RIVET A INSTALLATION**

Install by the same procedure as for REAR MUDGUARD REINFORCEMENT, REAR BUMPER SIDE RETAINER, REAR BUMPER CORNER BRACKET INSTALLATION. (Refer to P.51-9.)

Purchased from www.WorkshopManuals.co.uk

www.WorkshopManuals.co.uk

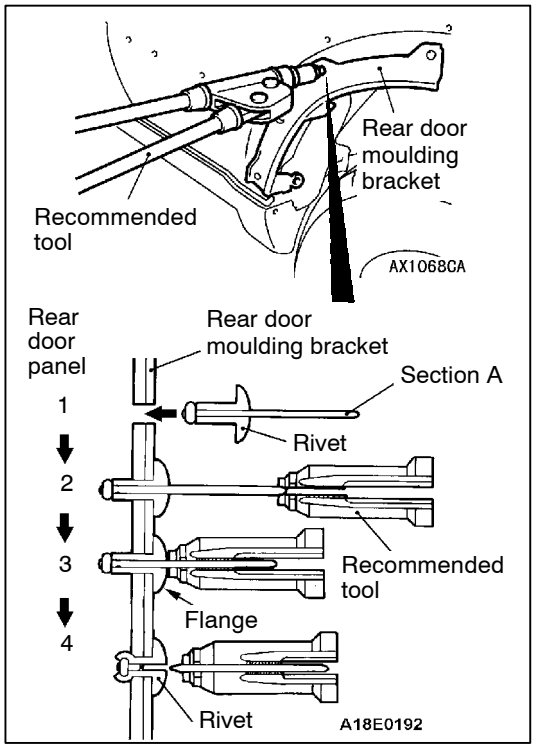


### ▶C◀ RIVET B INSTALLATION

Use the recommended tool shown in the illustration to connect the rivet by the following procedure.

1. Insert the rivet into the base material (vehicle body or rear door moulding bracket).
2. Place the recommended tool over section A of the rivet.
3. While pushing the flange surface of the rivet with the recommended tool, press the handle of the tool.
4. The thin part of section A of the rivet will break and the rivet will then be attached.

# GARNISH

## ADHESIVE

| Items | Specified sealant and adhesive |
|---|---|
| Side sill garnish | Double-sided tape [4 mm width and 1.2 mm thickness.] |

Purchased from www.WorkshopManuals.co.uk

www.WorkshopManuals.co.uk

# GARNISH

## REMOVAL AND INSTALLATION

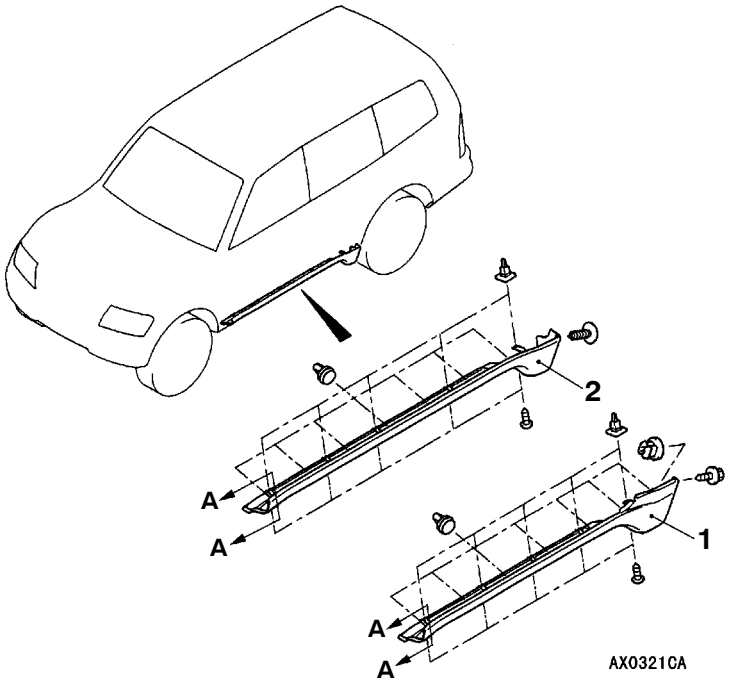


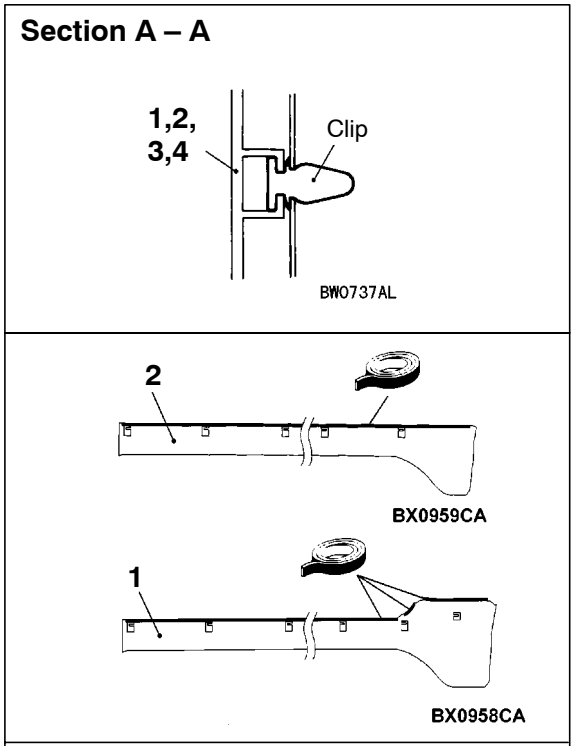


**Adhesive tape: Double-side tape [4 mm width and 1.2 mm thickness.]**

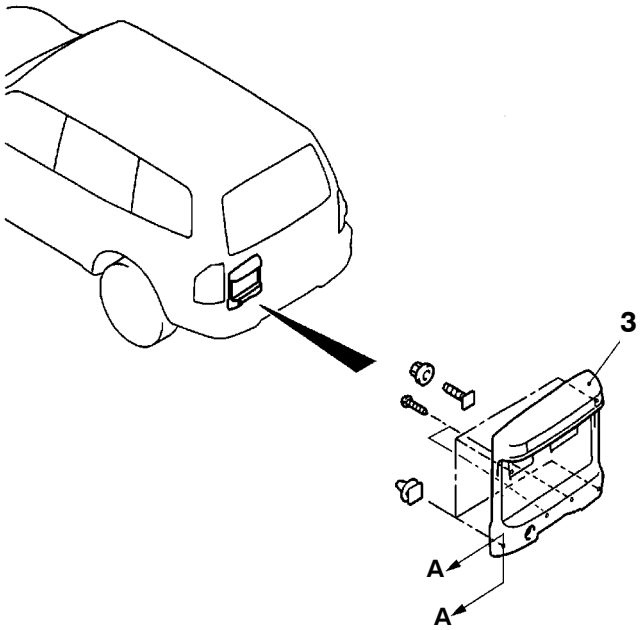


**Side sill garnish removal steps**

- Side step
- Front mudguard

◀A▶ ▶A◀ 1. Side sill garnish <Short wheelbase>
◀A▶ ▶A◀ 2. Side sill garnish <Long wheelbase>

**Licence plate garnish removal steps**

- Toolbox bracket, upper (Refer to GROUP 42 - Back door trim and waterproof film.)
- Licence lamp (Refer to GROUP 54A.)

3. Licence plate garnish

Purchased from www.WorkshopManuals.co.uk

www.WorkshopManuals.co.uk

## REMOVAL SERVICE POINT

### ◀A▶ SIDE SILL GARNISH REMOVAL

Remove by the same procedure as given in FRONT DOOR MOULDING, FRONT WHEEL CUT MOULDING, REAR WHEEL CUT MOULDING AND REAR DOOR MOULDING REMOVAL. (Refer to P.51-14.)

## INSTALLATION SERVICE POINT

### ▶A◀ SIDE SILL GARNISH INSTALLATION

Install by the same procedure as given in FRONT DOOR MOULDING, FRONT WHEEL CUT MOULDING, REAR WHEEL CUT MOULDING AND REAR DOOR MOULDING INSTALLATION. (Refer to P.51-14.)

Purchased from www.WorkshopManuals.co.uk

www.WorkshopManuals.co.uk

# MUDGUARD

## ADHESIVE

| Items | Specified sealant and adhesive |
|---|---|
| Front mudguard | Double-sided tape [5 mm wide and 0.8mm thick] |
| Rear mudguard <Short wheelbase> | |

## MUDGUARD

### REMOVAL AND INSTALLATION

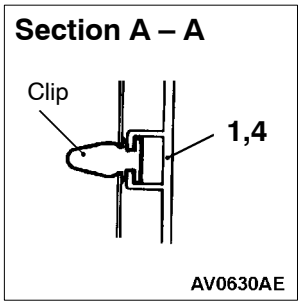


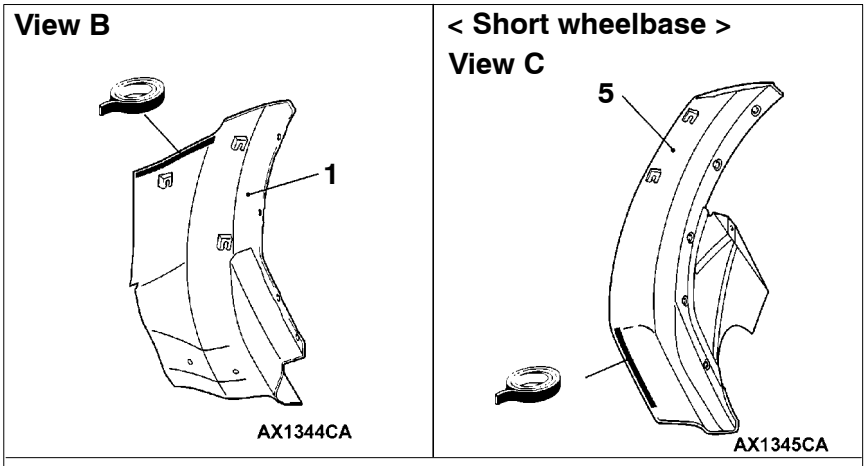


**Adhesive tape: Double-side tape [5 mm width and 0.8 mm thickness.]**

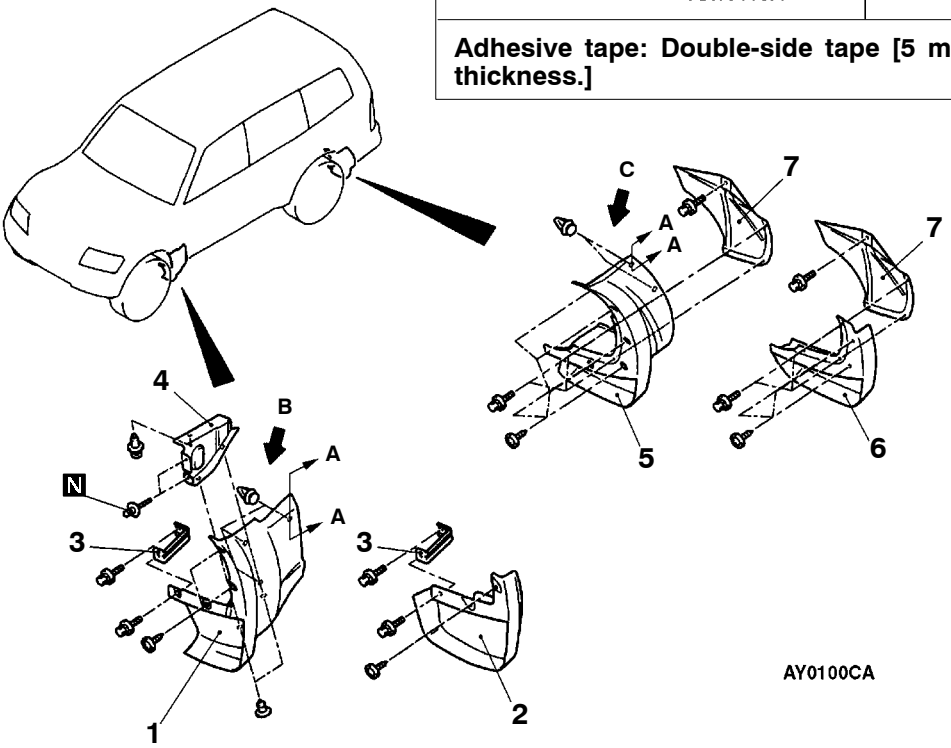


**Front mudguard removal steps**

◀A▶ ▶A◀ 1. Front mudguard (wide type)
2. Front mudguard (standard type)
3. Front mudguard bracket
◀B▶ ▶B◀ 4. Front mudguard cover

**Rear mudguard removal steps**

◀A▶ ▶A◀ 5. Rear mudguard (wide type)
6. Rear mudguard (standard type)
7. Rear mudguard protector

Purchased from www.WorkshopManuals.co.uk

www.WorkshopManuals.co.uk

## REMOVAL SERVICE POINTS

### ◀A▶ FRONT MUDGUARD, REAR MUDGUARD REMOVAL

Remove by the same procedure as given in FRONT DOOR MOULDING, FRONT WHEEL CUT MOULDING, REAR WHEEL CUT MOULDING AND REAR DOOR MOULDING REMOVAL. (Refer to P.51-14.)

### ◀B▶ FRONT MUDGUARD COVER REMOVAL

Remove by the same procedure as for REAR MUDGUARD REINFORCEMENT, REAR BUMPER SIDE RETAINER, REAR BUMPER CORNER BRACKET REMOVAL. (Refer to P.51-10.)

## INSTALLATION SERVICE POINTS

### ▶A◀ FRONT MUDGUARD, REAR MUDGUARD INSTALLATION

Install by the same procedure as given in FRONT DOOR MOULDING, FRONT WHEEL CUT MOULDING, REAR WHEEL CUT MOULDING AND REAR DOOR MOULDING INSTALLATION. (Refer to P.51-14.)

### ▶B◀ FRONT MUDGUARD COVER INSTALLATION

Install by the same procedure as for REAR MUDGUARD REINFORCEMENT, REAR BUMPER SIDE RETAINER, REAR BUMPER CORNER BRACKET INSTALLATION. (Refer to P.51-10.)

Purchased from www.WorkshopManuals.co.uk

www.WorkshopManuals.co.uk

# REAR DEFLECTOR

## SPECIAL TOOL

| Tools | Number | Name | Use |
|---|---|---|---|
| 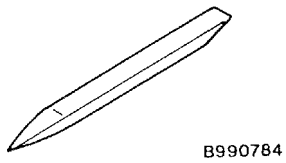  | MB990784 | Ornament remover | Rear deflector cover removal |

# REAR DEFLECTOR

## REMOVAL AND INSTALLATION

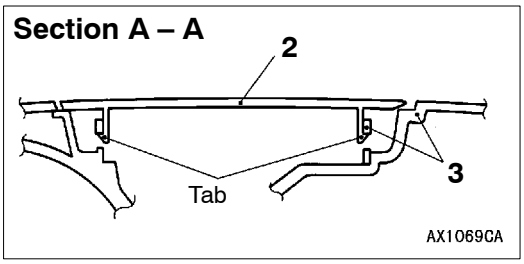


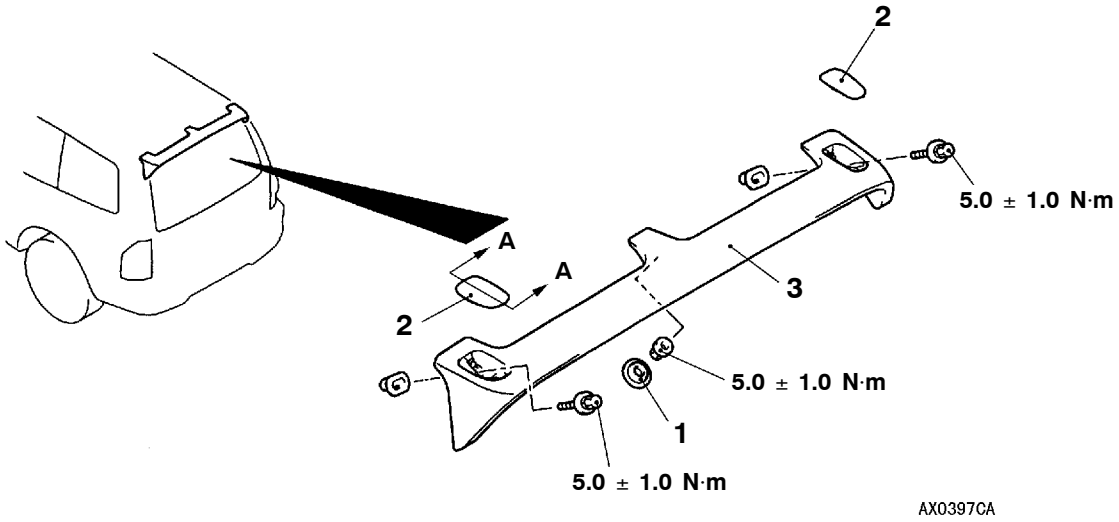


**Rear deflector removal steps**

1. Resin plug

◀A▶

2. Rear deflector cover
3. Rear deflector

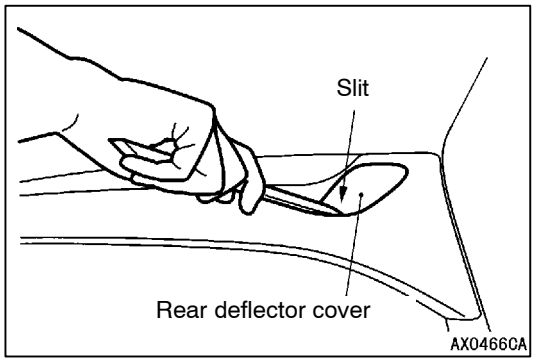


## REMOVAL SERVICE POINT

### ◀A▶ REAR DEFLECTOR COVER REMOVAL

1. Insert the special tool into the slit on the rear deflector cover.
2. Release the tab by prying it towards the frot of the vehicle.

Purchased from www.WorkshopManuals.co.uk

www.WorkshopManuals.co.uk

# SIDE STEP

## SIDE STEP

### REMOVAL AND INSTALLATION

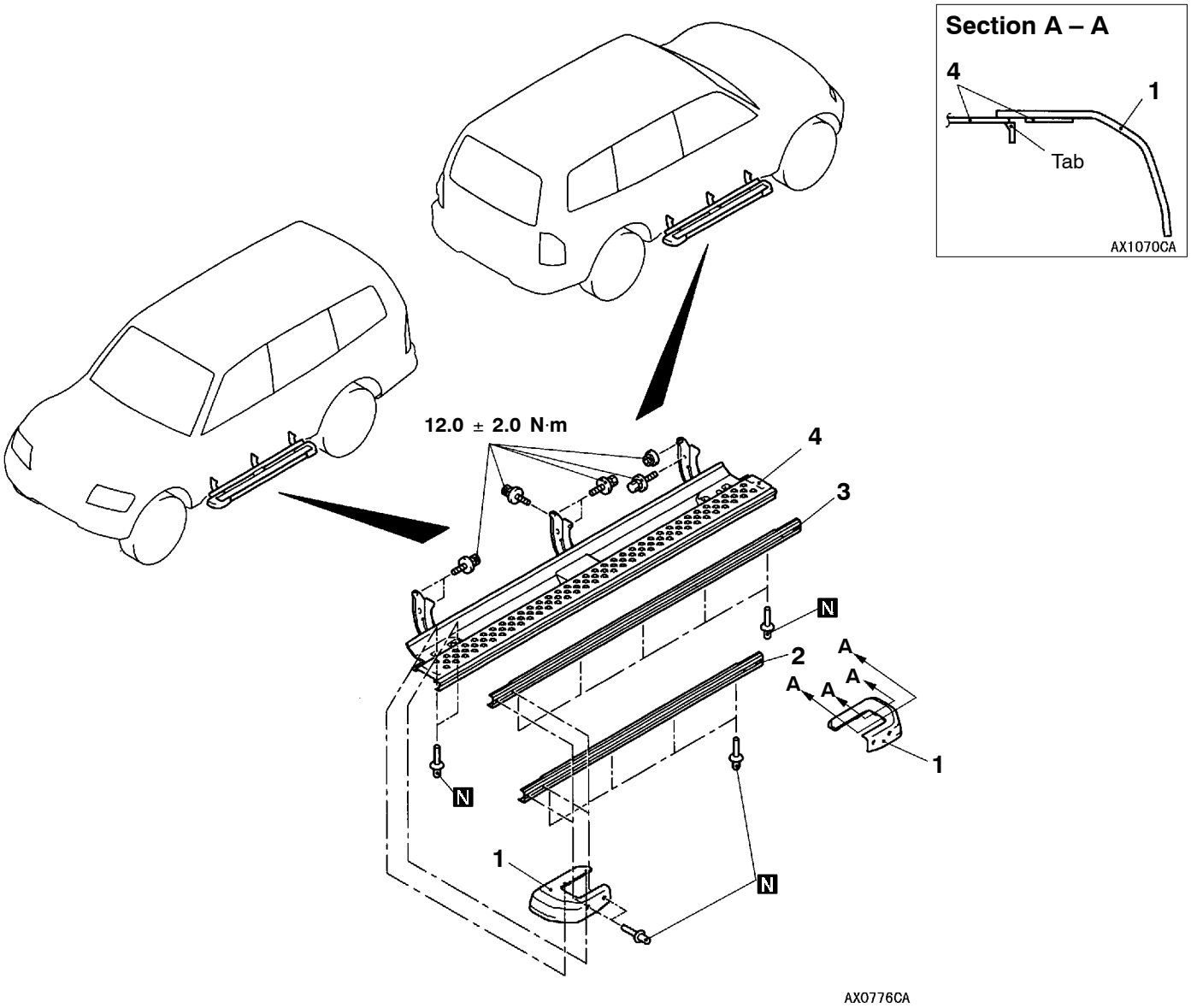


**Side step removal steps**

◀A▶ ▶A◀ 1. Side step cover
◀A▶ ▶A◀ 2. Non-slip cover <Short wheelbase>
◀A▶ ▶A◀ 3. Non-slip cover <Long wheelbase>
4. Side step assembly

Purchased from www.WorkshopManuals.co.uk

www.WorkshopManuals.co.uk

### REMOVAL SERVICE POINT

**◀A▶ SIDE STEP COVER, NON-SLIP COVER REMOVAL**

Remove by the same procedure as for REAR MUDGUARD REINFORCEMENT, REAR BUMPER SIDE RETAINER, REAR BUMPER CORNER BRACKET REMOVAL. (Refer to P.51-9.)

### INSTALLATION SERVICE POINT

**▶A◀ SIDE STEP COVER, NON-SLIP COVER INSTALLATION**

Install by the same procedure as for REAR MUDGUARD REINFORCEMENT, REAR BUMPER SIDE RETAINER, REAR BUMPER CORNER BRACKET INSTALLATION. (Refer to P.51-10.)

# WINDSHIELD WIPER AND WASHER

## SERVICE SPECIFICATIONS

| Items | | Standard value |
|---|---|---|
| Park position of the windshield wiper arm and blade assembly (Distance from end of wiper blade to end of front deck garnish) mm | Driver's side | 20 - 30 |
| | Passenger's side | 25 - 35 |

## TROUBLESHOOTING

The windshield wiper and washer is controlled by the SWS (Smart Wiring System). For troubleshooting procedures, refer to GROUP 54B - SWS Diagnosis.

Purchased from www.WorkshopManuals.co.uk

www.WorkshopManuals.co.uk

# WINDSHIELD WIPER AND WASHER

## REMOVAL AND INSTALLATION

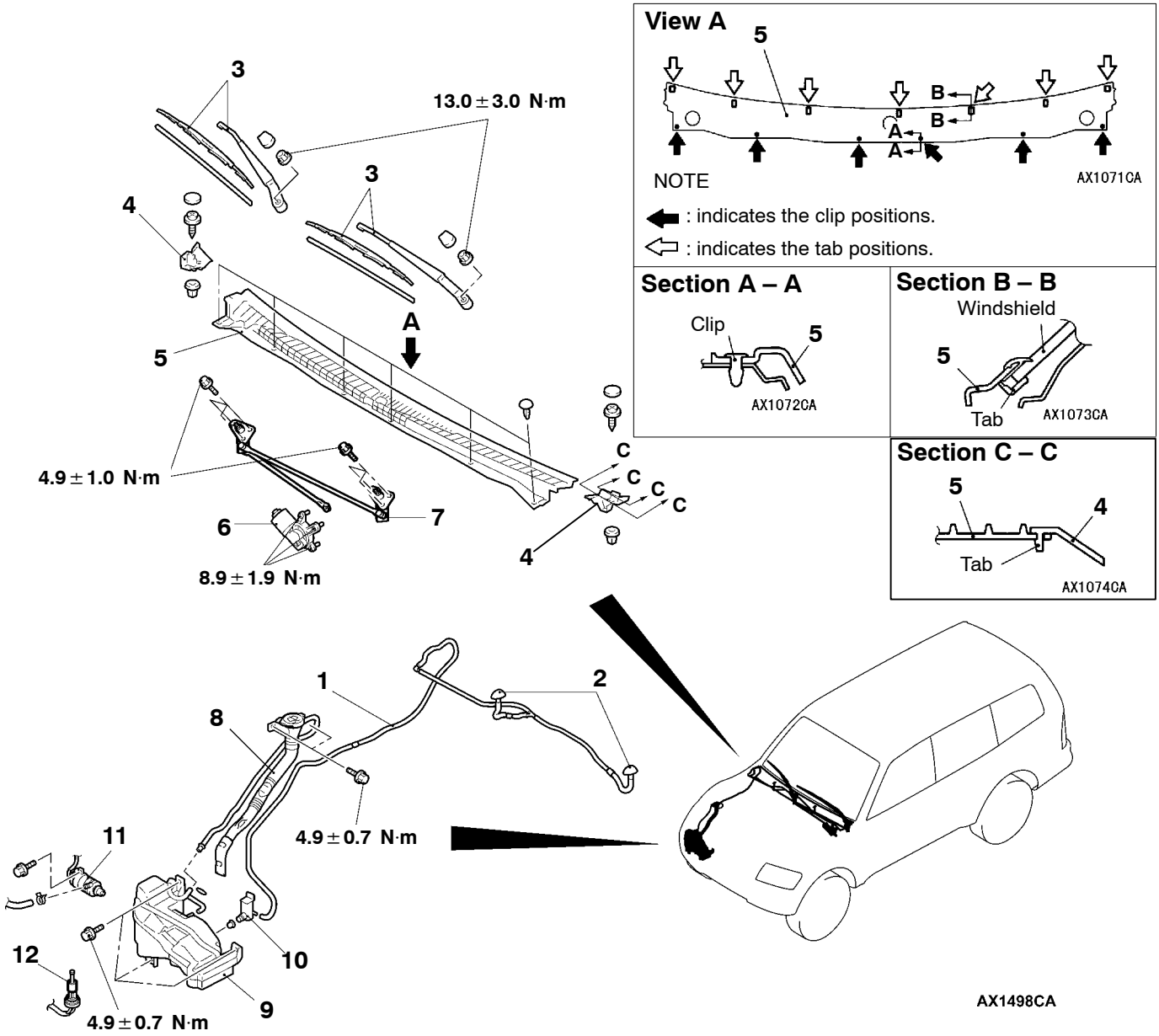


1. Windshield washer hose assembly
2. Windshield washer nozzle

**Windshield wiper motor assembly and link assembly removal steps**

▶A◀ 3. Windshield wiper arm and blade assembly
4. Front deck side garnish
5. Front deck garnish
◀A▶ 6. Windshield wiper motor assembly
7. Link assembly

**Windshield washer tank removal steps**

- Front bumper face assembly (Refer to P.51- 4.)
- Headlamp assembly (Refer to GROUP 54A.)

8. Inlet assembly
9. Windshield washer tank assembly
10. Windshield washer motor
11. Headlamp washer motor
12. Washer fluid level sensor

NOTE
For the removal and installtion of the wiper and washer switch, refer to GROUP 54A - Colum switch.

Purchased from www.WorkshopManuals.co.uk

www.WorkshopManuals.co.uk

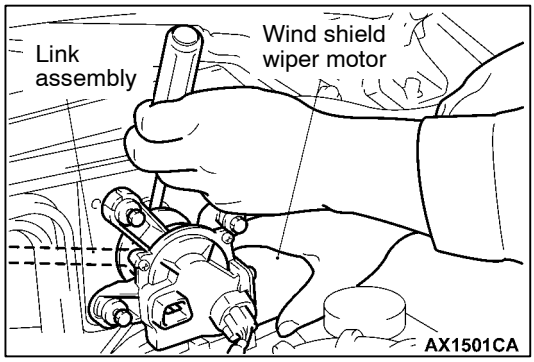


## REMOVAL SERVICE POINT

### ◀A▶ WINDSHIELD WIPER MOTOR ASSEMBLY REMOVAL

1. Remove the windshield wiper motor assembly mounting bolts.
2. Use a flat-tipped screwdriver to separate the clamp arm of the windshield wiper motor assembly and the link assembly,and then remove the windshield wiper motor assembly.

**Caution**
**The automatic stop angle is determined at the time that the clamp arm and the windshield wiper motor assembly areinstalled together, and so they should not be disassembled unless required.**
**Make markings on the vehicle body before removing the windshield wiper motor assembly.**

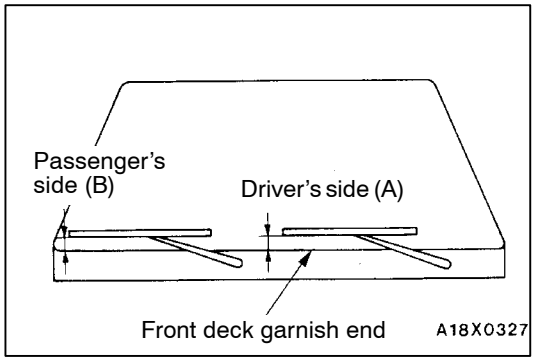


## INSTALLATION SERVICE POINT

### ▶A◀ WINDSHIELD WIPER ARM AND BLADE ASSEMBLY INSTALLATION

Install the wiper blade in the specified position (standard value).

**Standard value:**
**Driver's side (A) 20 - 30 mm**
**Passenger's side (B) 25 - 35 mm**

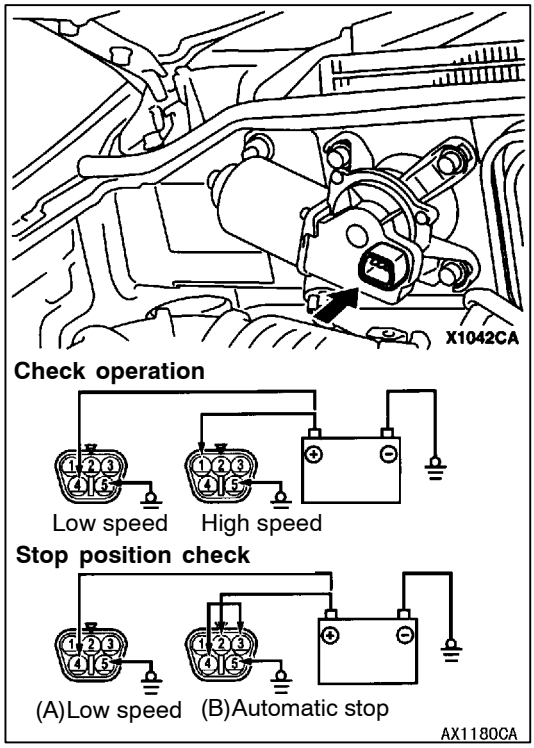


## INSPECTION

### WINDSHIELD WIPER MOTOR ASSEMBLY CHECK

The windshield wiper motor assembly should be installed to the vehicle body and the harness connector should be disconnected when checking the wiper motor.

- **Low Speed and High Speed Wiper Motor Operation Check**

  Connect the battery to the wiper motor as shown in the illustration, and then check the operation of the wiper motor at low speed and at high speed.

- **Windshield Wiper Motor Assembly Stop Position Check**

  1. Connect the battery to the wiper motor as shown in illustration (A), and then run the wiper motor at low speed. Then, while the motor is operating, disconnect the battery to make the wiper motor stop.
  2. Connect the terminals and the battery as shown in illustration (B), and then check whether the wiper motor automatically stops in the correct stop position after it has been running at low speed.

Purchased from www.WorkshopManuals.co.uk

www.WorkshopManuals.co.uk

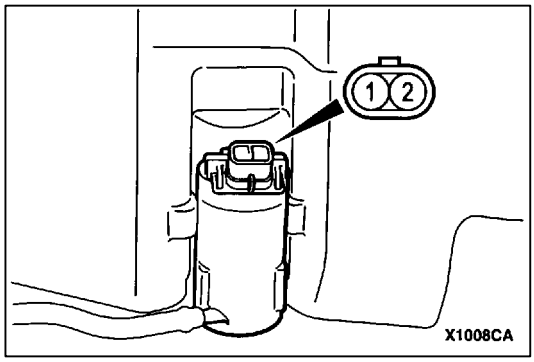


## WINDSHIELD WASHER MOTOR CHECK

1. The windshield washer tank assembly should be installed and the windshield washer tank should be filled with water whenchecking the washer motor.
2. Check that water is circulated strongly when system voltage is applied to terminal (2) and terminal (1) is earthed.

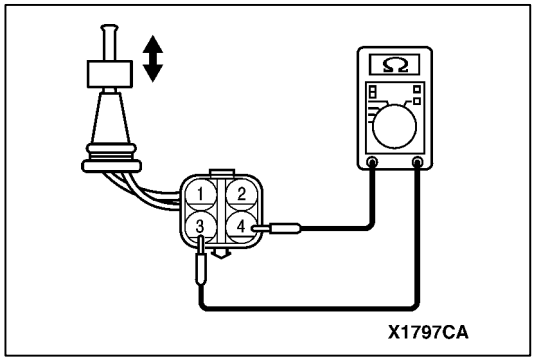


## WASHER FLUID LEVEL CHECK

1. Connect a circuit tester to the connector of the level sensor as shown.
2. Check that when the float is moved down,the circuit is closed and that when the float is moved up,the circuit is opened.

## WINDSHIELD WASHER NOZZLE SPRAY POSITION CHECK

Move the nozzle to adjust so that the water is sprayed out within the range shown in the illustration.

**Caution**
**On R.H. drive vehicles, the illustration is symmetrical.**

Units: mm

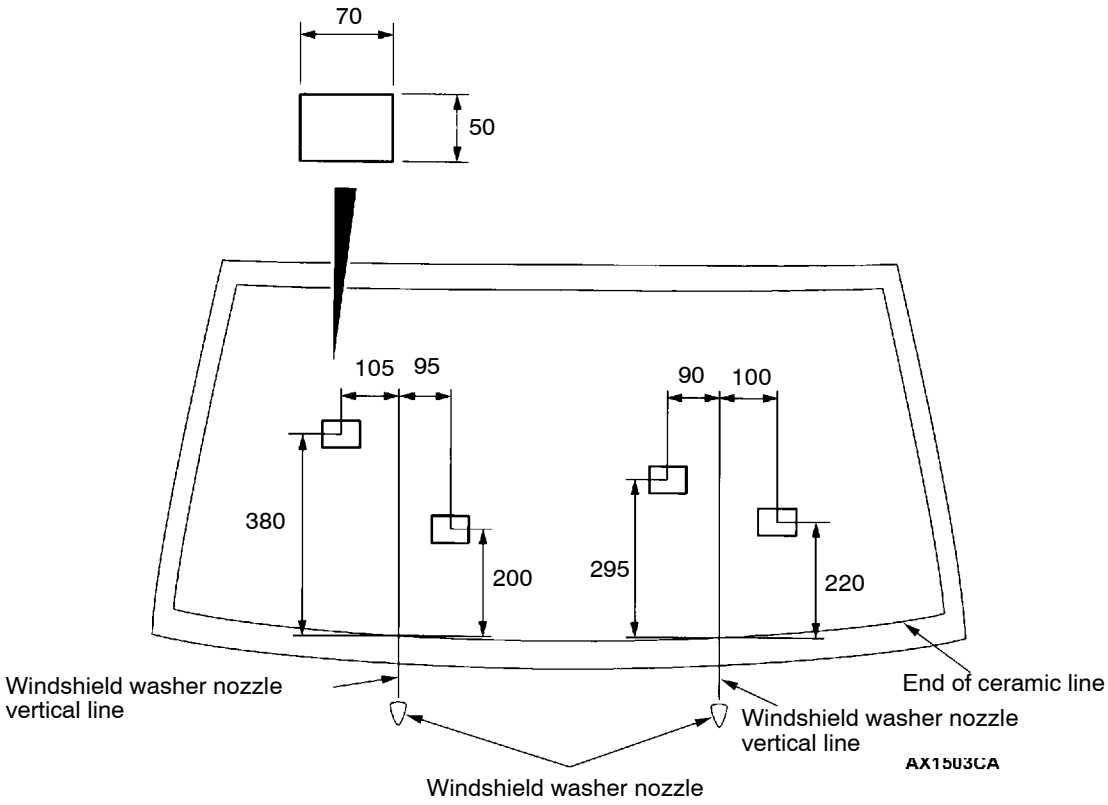


Purchased from www.WorkshopManuals.co.uk

www.WorkshopManuals.co.uk

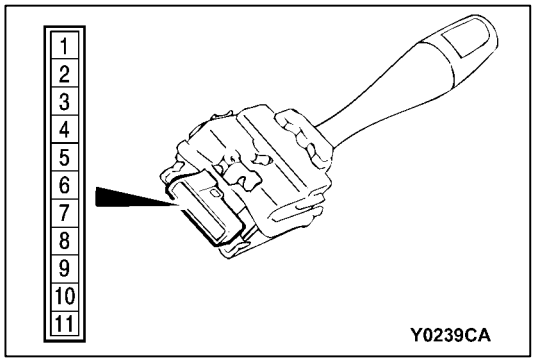


**WINDSHIELD WIPER AND WINDSHIELD WASHER SWITCH AND WINDSHIELD INTERMITTENT WIPER INTERVAL ADJUSTING KNOB CHECK**

**<L.H. drive vehicles>**

1. Windshield wiper and washer switch,rear wiper and washer switch

| Switch position | Terminal No. | | | | | |
|---|---|---|---|---|---|---|
| | 6 | 7 | 8 | 9 | 10 | 11 |
| OFF | | | | | | |
| Windshield wiper mist switch ON | ○ | | | | | ○ |
| Windshield intermittent wiper switch ON | ○ | | | | ○ | |
| Windshield low-speed wiper switch ON | ○ | | | ○ | | |
| Windshield high-speed wiper switch ON | ○ | | ○ | | | |
| Windshield washer switch ON | ○ | ○ | | | | |

2. Windshield intermittent wiper interval adjusting knob
   Measure the resistance value at terminal numbers 3 and 6. The resistance value should rise smoothly from approximately 0 Ω (“FAST” position) to apporoximately 1 kΩ (“SLOW” position).

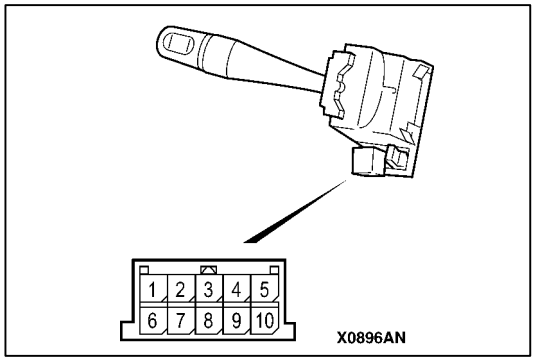


**<R.H.drive vehicles>**

**WINDSHIELD INTERMITTENT WIPER INTERVAL ADJUSTING KNOB**

Measure the resistance value at terminal numbers 4 and 6. The resistance value should rise smoothly from approximately 0 Ω (“FAST” position) to apporoximately 1 kΩ (“SLOW” position).

NOTE:
Windshield washer and wiper switch is integrated with the column-ECU, and can not be checked. However, its operation can be checked by the input signal check. (Refer to GROUP 54B – Troubleshooting.)

Purchased from www.WorkshopManuals.co.uk

www.WorkshopManuals.co.uk

# REAR WIPER AND WASHER

## REFERENCE VALUE

| Item | Standard value |
|---|---|
| Rear wiper arm and blade assembly stop position<br>(Distance from end of wiper blade to end of ceramic line) mm | 30 ± 5 |

## TROUBLESHOOTING

The rear wiper and washer is controlled by the SWS (Smart Wiring System). For troubleshooting procedures, refer to GROUP 54B - SWS Diagnosis.

## REAR WIPER AND WASHER

### REMOVAL AND INSTALLATION

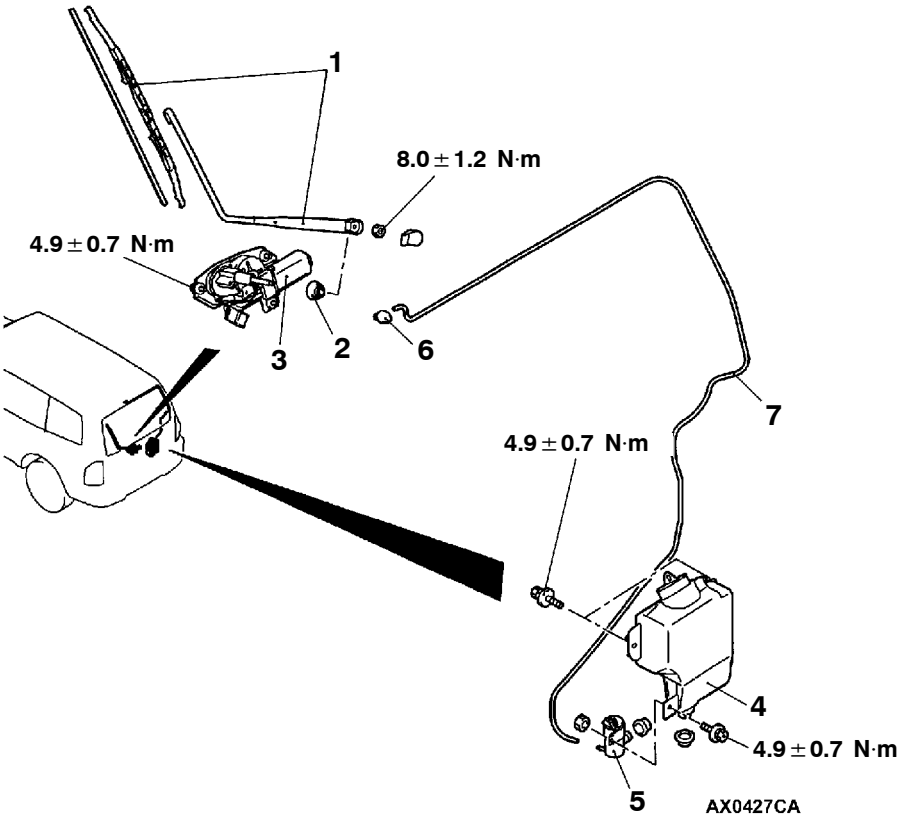


**Rear wiper motor assembly removal steps**

- Toolbox bracket, upper (Refer to GROUP 42 – Back Door Trim, Waterproof Film.)

▶A◀ 1. Rear wiper arm and blade assembly
▶B◀ 2. Grommet
3. Rear wiper motor assembly

**Rear washer tank and rear washer motor removal steps**

- Waterproof film (Refer to GROUP 42.)

4. Rear washer tank assembly
5. Rear washer motor

**Rear washer hose removal steps**

6. Rear washer nozzle
- Waterproof film (Refer to GROUP 42.)

7. Rear washer hose

NOTE
For the removal and installtion of the wiper and washer switch, refer to GROUP 54A - Colum switch.

Purchased from www.WorkshopManuals.co.uk

www.WorkshopManuals.co.uk

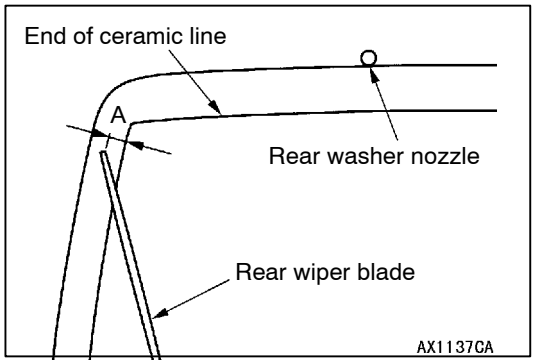


## INSTALLATION SERVICE POINTS

### ▶A◀ REAR WIPER ARM AND BLADE ASSEMBLY INSTALLATION

Install so that the end of the wiper blade stops at the specified position.

**Standard value (A) : 30 ± 5 mm**

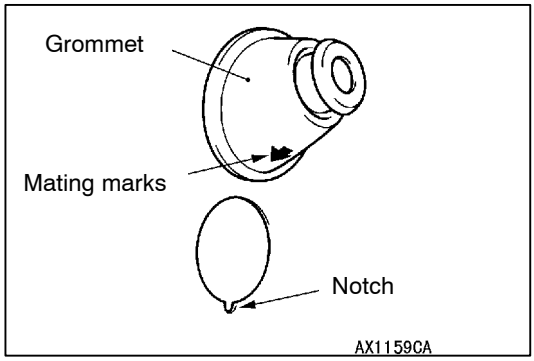


### ▶B◀ GROMMET INSTALLATION

Install so that the mating mark on the grommet is aligned with the notch in the mounting hole.

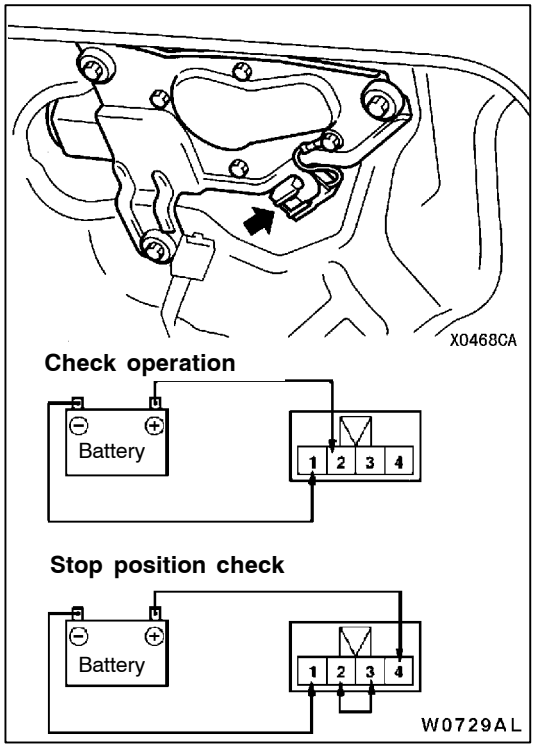


## INSPECTION

### REAR WIPER MOTOR ASSEMBLY CHECK

The rear wiper motor assembly should be installed to the vehicle body and the harness connector should be disconnected when checking the wiper motor.

- **Wiper Motor Operation Check**

  Connect the battery to the wiper motor as shown in the illustration, and then check the operation of the wiper motor.

- **Wiper Motor Stop Position Check**

  1. Operate the wiper motor by the same method as described in the check procedure above. Then, while the motor is operating, disconnect the battery to make the wiper motor stop.
  2. Reconnect the battery as shown in the illustration, and then check whether the wiper motor automatically stops in the correct stop position after it has been running.

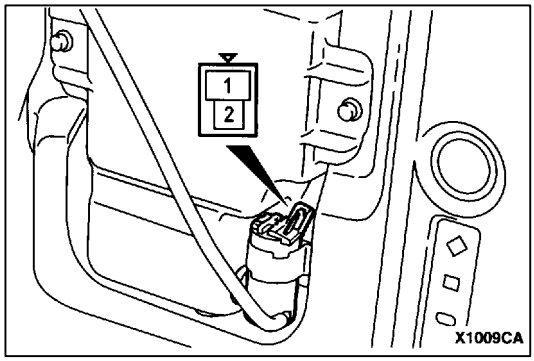


### REAR WASHER MOTOR CHECK

1. The rear washer tank assembly should be installed and the rear washer tank should be filled with water when checking the washer motor.
2. Check that water is circulated strongly when system voltage is applied to terminal (2) and terminal (1) is earthed.

Purchased from www.WorkshopManuals.co.uk

www.WorkshopManuals.co.uk

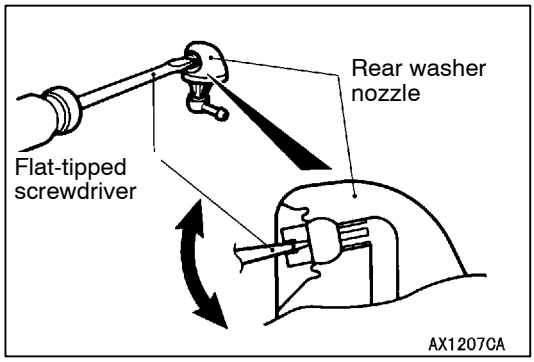


## REAR WASHER NOZZLE SPRAY DIRECTION CHECK

Move the nozzle to adjust so that the water is sprayed out within the range shown in the illustration.

- **Rear Washer Nozzle Spray Position Vertical Direction Adjustment**

  To adjust the vertical direction of the rear washer nozzle spray position, insert a flat-tipped screwdriver into thespray hole of the rear washer nozzle and move it in the direction of the arrow.

  **Caution**
  **Be careful not to damage the spray hole of the nozzle when inserting the flat-tipped screwdriver. Into the spray hole of the nozzle.**

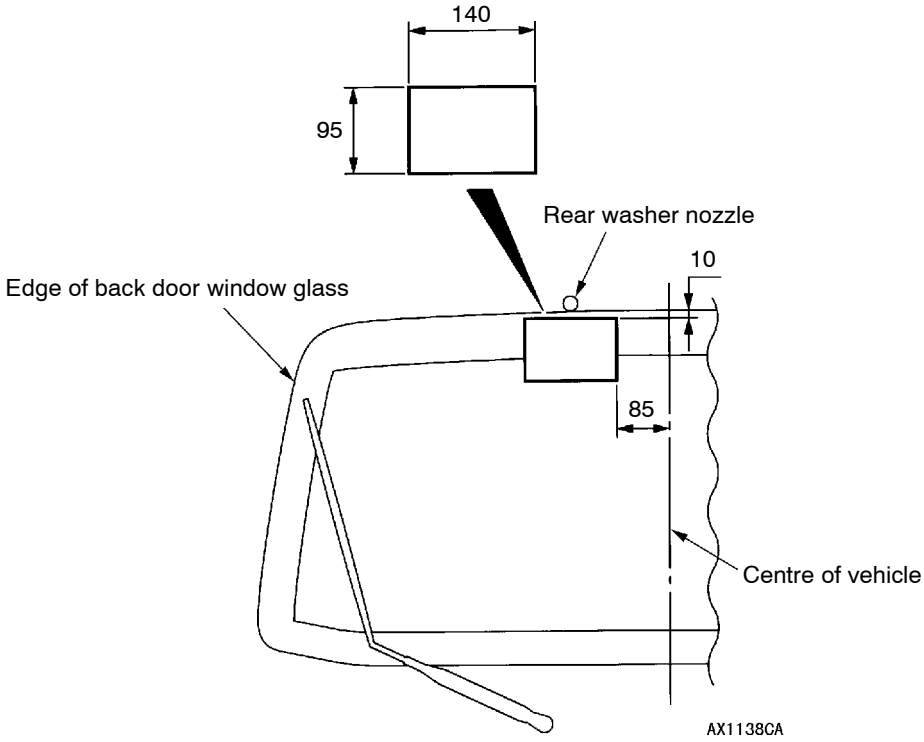


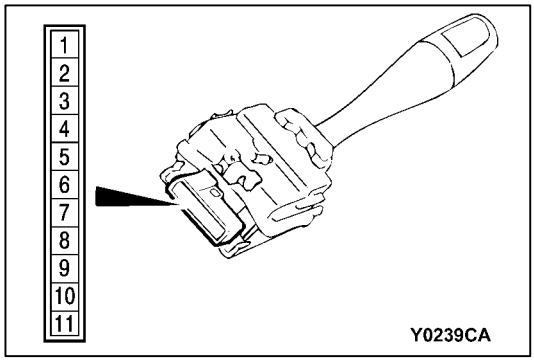


## REAR WIPER AND WASHER SWITCH CHECK

**<L.H.drive vehicles>**

| Switch position | Terminal No. | | |
|---|---|---|---|
| | 4 | 5 | 6 |
| OFF | | | |
| Rear washer switch ON | | ○ | ○ |
| Rear wiper switch ON | ○ | | ○ |

Purchased from www.WorkshopManuals.co.uk

www.WorkshopManuals.co.uk

**<R.H.drive vehicles>**

Rear wiper and washer switch is integrated in the column-ECU, and can not be checked. However, its operation can be checked by the input signal check. (Refer to GROUP 54B – Troubleshooting.)

# HEADLAMP WASHER

## TROUBLESHOOTING

The headlamp washer is controlled by the Smart Wiring System (SWS). For troublesshooting, refer to GROUP 54B - Troubleshooting.

## HEADLAMP WASHER

### REMOVAL AND INSTALLATION

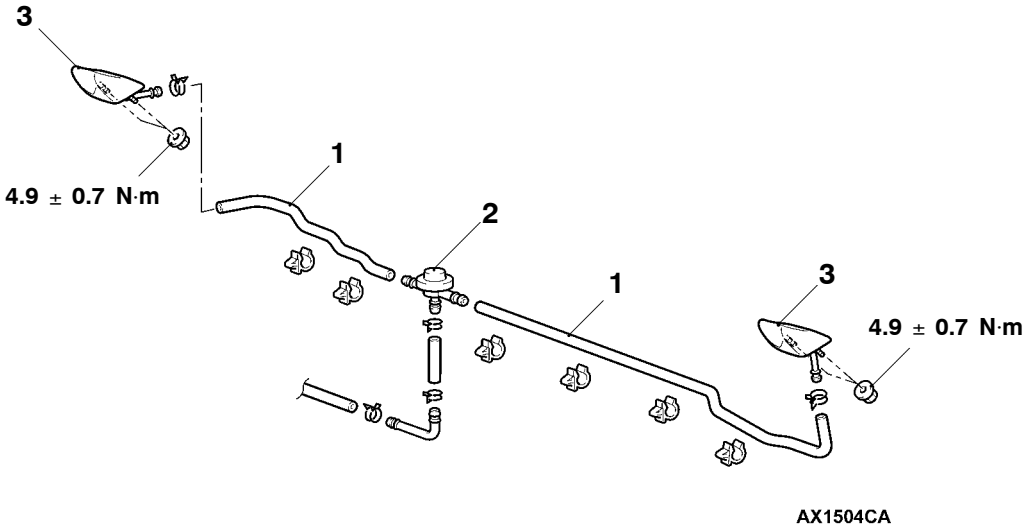


**Washer nozzle and check valve removal steps**

- Washer fluid draining
- Front bumper face assembly(Refer to P.51-4.)

1. Washer hose
2. Check valve
3. Washer nozzle

NOTE
1. For removal and installation of the Lighting switch, refer to GROUP 54A - Column switch.
2. For removal and installation of the washer tank, refer to P.51-24.

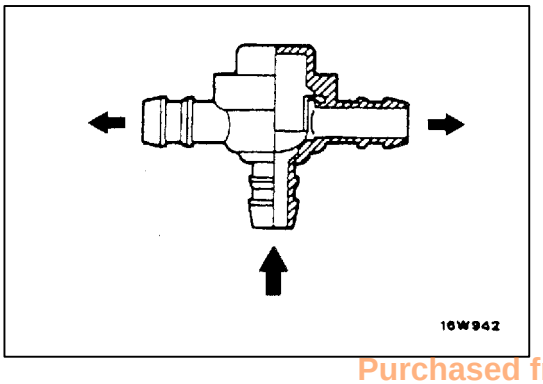


### INSPECTION

#### CHECK VALVE CHECK

Apply pressure to the inlet of the check valve to check its opening pressure.

**Opening pressure: 78 kPa**

Purchased from www.WorkshopManuals.co.uk

www.WorkshopManuals.co.uk

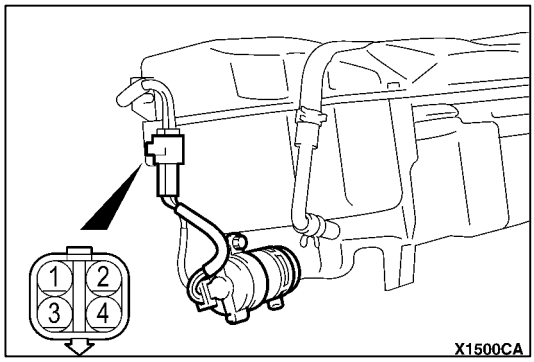


### HEADLAMP WASHER MOTOR CHECK

1. With the headlamp washer motor installed to the washer tank, fill the washer tank with water.
2. Check that the water squirts out strongly when battery voltage is applied to terminals (1) and (2).

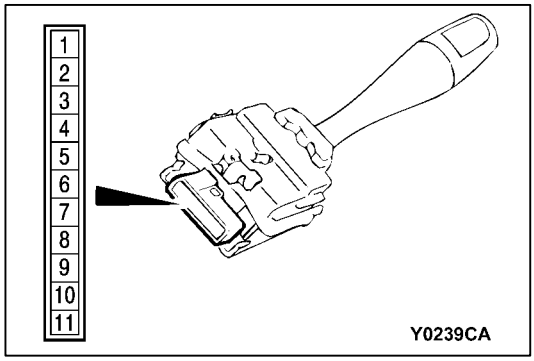


### HEADLAMP WASHER SWITCH CHECK

**<R.H.drive vehicles>**

| Switch position | Terminal No. | |
|---|---|---|
| | 3 | 4 |
| OFF | | |
| Headlamp washer switch ON | ○ | ○ |

**<L.H.drive vehicles>**

Headlamp washer switch is integrated in the column-ECU, and can not be checked. However, its operation can be checked by the input signal check. (Refer to GROUP 54B – Troubleshooting.)

# WIPER DEICER

## SPECIAL TOOL

| Tools | No. | Name | Application |
|---|---|---|---|
| 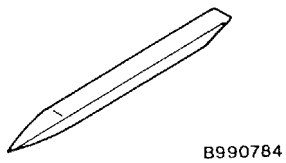  | MB990784 | Ornament remover | Wiper deicer switch removal |

Purchased from www.WorkshopManuals.co.uk

www.WorkshopManuals.co.uk

# WIPER DEICER

## REMOVAL AND INSTALLATION

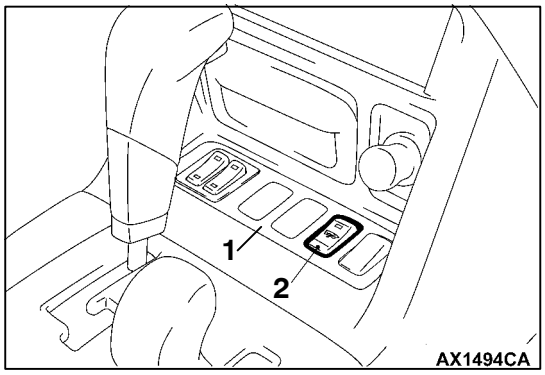


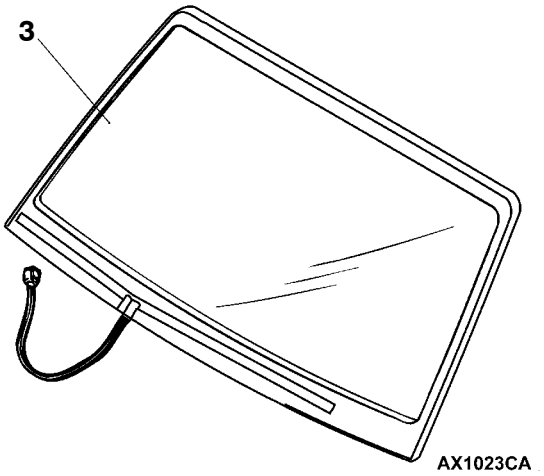


**Wiper deicer switch removal steps**

1. Switch panel (Refer to GROUP 52A - Instrument Panel.)
2. Wiper deicer switch

**Windshield Removal**

3. Windshield (Refer to GROUP 42.)

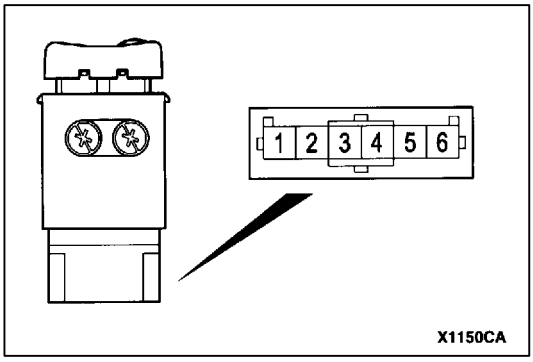


## INSPECTION

### WIPER DEICER SWITCH CONTINUITY CHECK

| Switch position | Terminal No. | | | | | | | |
|---|---|---|---|---|---|---|---|---|
| | 1 | - | 2 | 3 | 4 | 5 | - | 6 |
| OFF | | | | | | | ILL | |
| ON | | IND | | | | | | |

Purchased from www.WorkshopManuals.co.uk

www.WorkshopManuals.co.uk

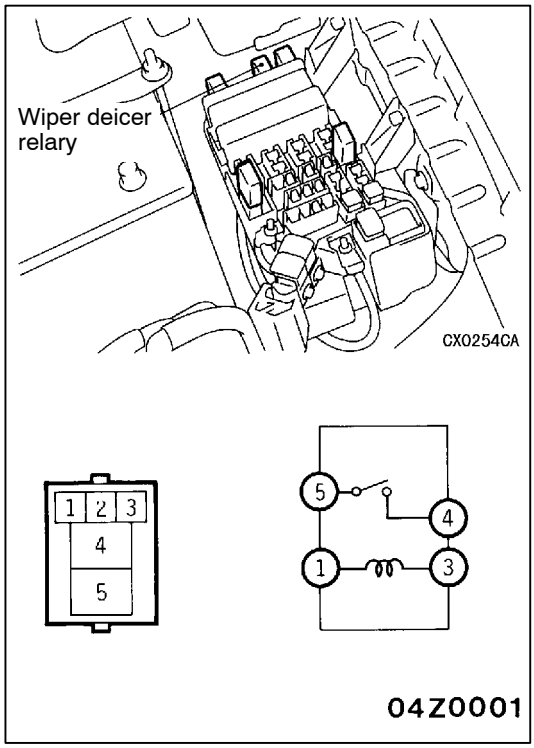


## WIPER DEICER RELAY CHECK

| System voltage | Terminal No. | | | |
|---|---|---|---|---|
| | 1 | 3 | 4 | 5 |
| When current is not flowing | ○ | ○ | | |
| When current is flowing | ⊖ | ⊕ | ○ | ○ |

Purchased from www.WorkshopManuals.co.uk

www.WorkshopManuals.co.uk

# MARKS

## MARKS

### REMOVAL AND INSTALLATION

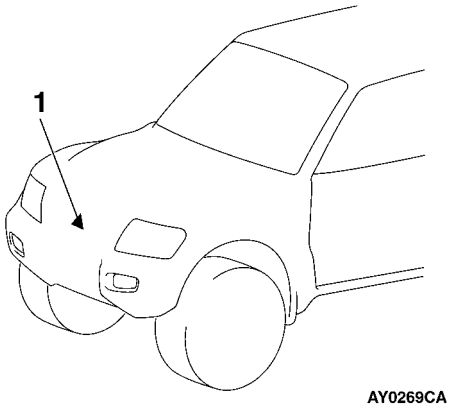


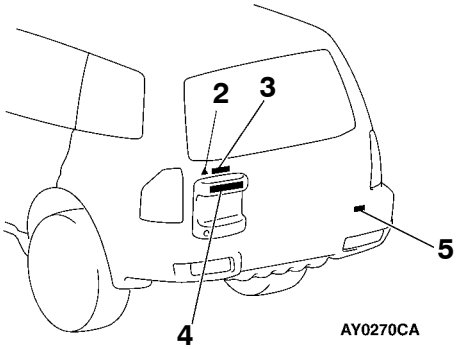


1. Three diamond mark
▶A◀ 2. Three diamond mark
▶A◀ 3. GDI or DI-D mark
4. Vehicle logo plate
▶A◀ 5. GLS or GLX mark

### INSTALLATION SERVICE POINT

**▶A◀ MARK INSTALLATION**

**1. INSTALLATION POSITION**

**(2) Tree diamond mark (3)GDI or DI-D mark**

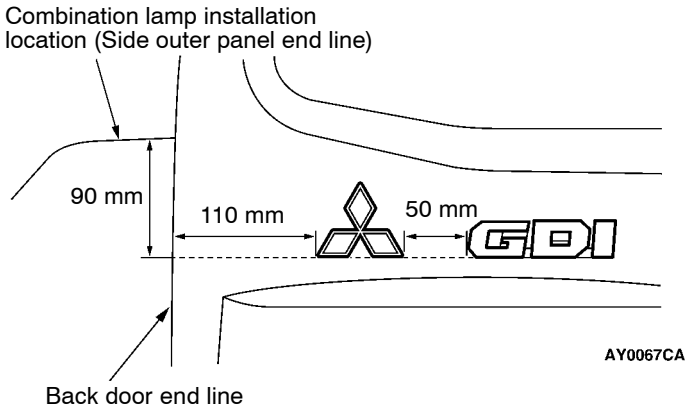


**(5)GLS mark or GLX mark**

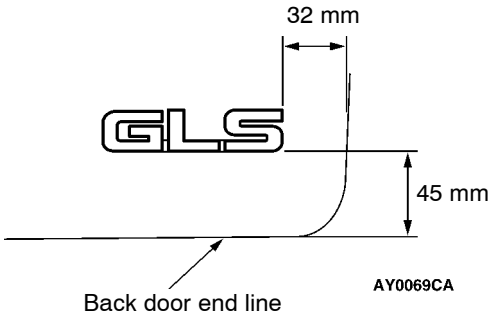


**2. INSTALLATION SERVICE POINTS**

(1) Clean the mark attachment location on the vehicle body with unleaded petrol.
(2) Peel off the protective paper from the reverse surface of the mark, and then attach the mark to the attachment location.
(3) Remove the application tape.

Purchased from www.WorkshopManuals.co.uk

www.WorkshopManuals.co.uk

**Caution**

1) **Carry out this work in a location which has an ambient temperature of 20 - 38°C and which is free from dust.**
2) **If the ambient temperature is lower than 20°C, heat the mark and the vehicle body (application location) to 20 - 30°C.**

# OUTSIDE DOOR MIRROR

## SPECIAL TOOL

| Tools | No. | Name | Application |
|---|---|---|---|
| 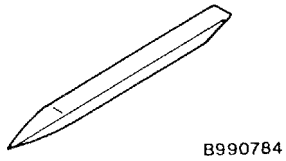  | MB990784 | Ornament remover | Motor-driven remote controlled door mirror switch removal |

## TROUBLESHOOTING

The outside mirrors are controlled by the SWS (Smart Wiring System). For troubleshooting procedures, refer to GROUP 54B - SWS Diagnosis.

Purchased from www.WorkshopManuals.co.uk

www.WorkshopManuals.co.uk

# OUTSIDE DOOR MIRROR

## REMOVAL AND INSTALLATION

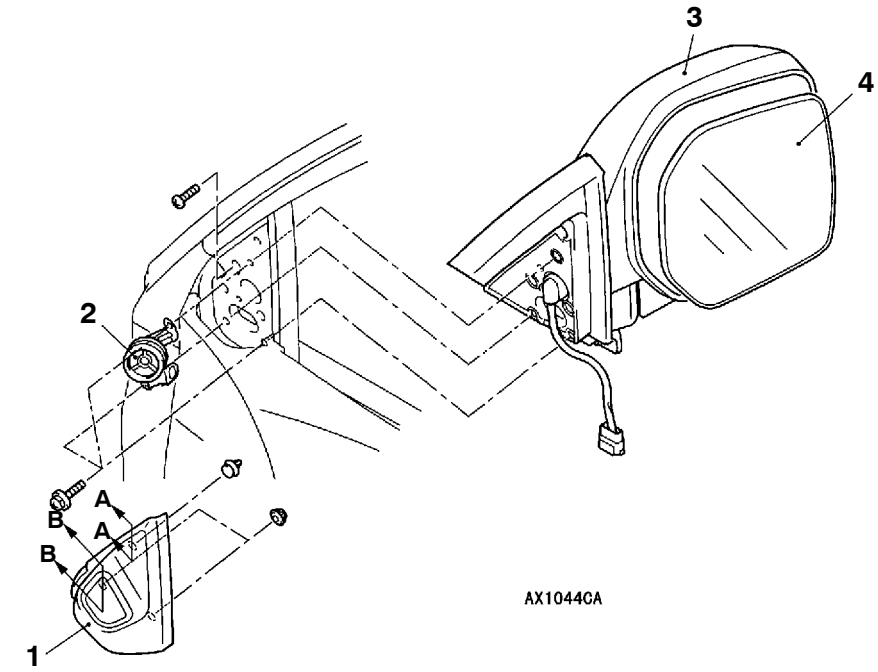


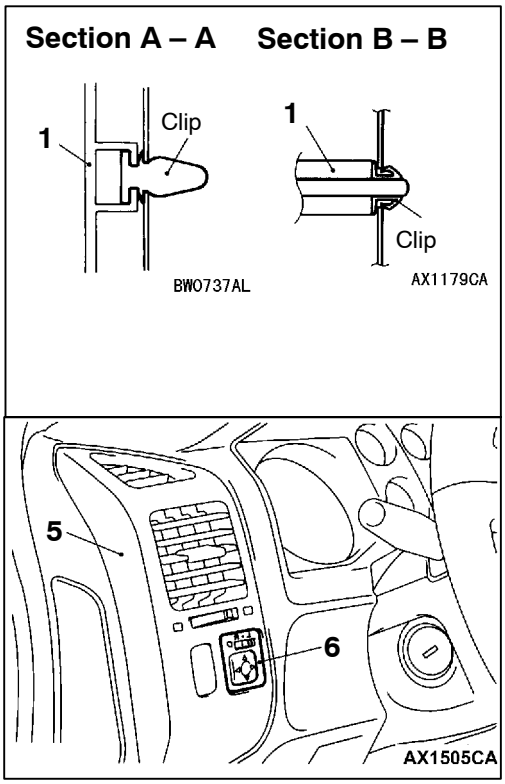


**Door mirror removal steps**

1. Delta inner cover
2. Tweeter assembly
3. Door mirror assembly
4. Mirror ◀A▶ ▶A◀

**Motor-driven remote controlled mirror switch removal steps**

5. Air outlet assembly (Refer to GROUP 52A - Instrument Panel.)
6. Motor-driven remote controlled mirror switch

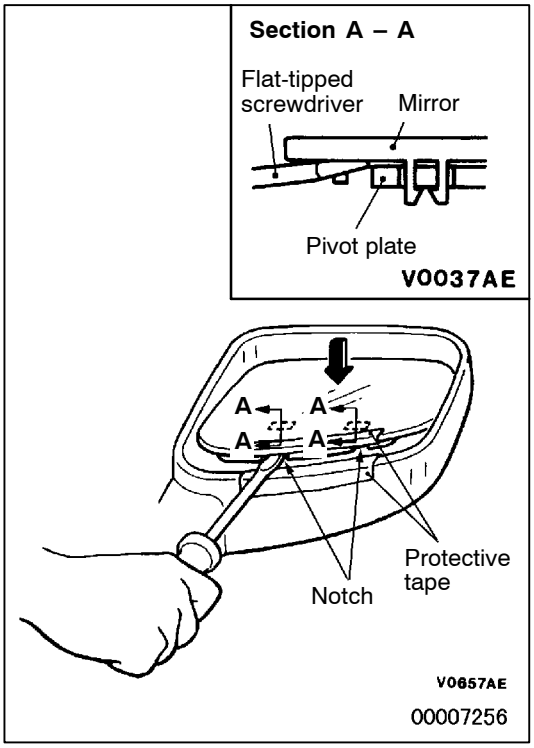


## REMOVAL SERVICE POINT

### ◀A▶ MIRROR REMOVAL

Push the top of the mirror with your hand to tilt it and attach the protective tape as shown in the illustration. Then insert a flat-tipped screwdriver in between the notch at the rear of the mirror and the pivot plate, and disengage the bottom of the mirror.

Purchased from www.WorkshopManuals.co.uk

www.WorkshopManuals.co.uk

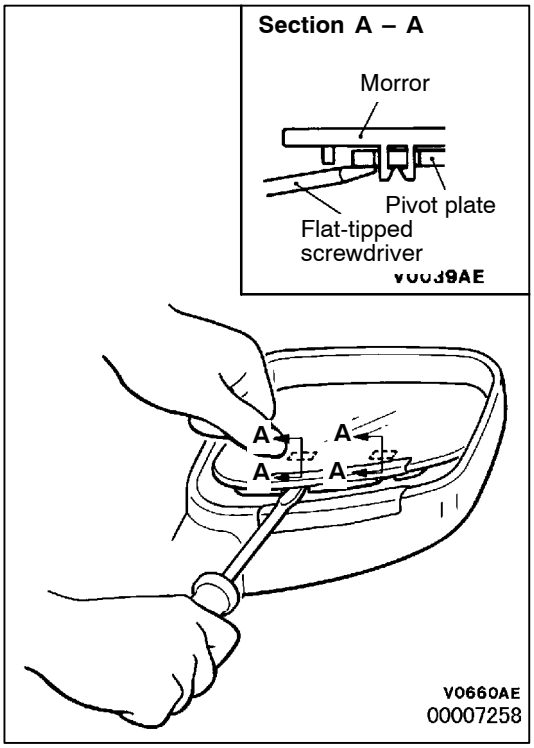


## INSTALLATION SERVICE POINT

### ▶A◀ MIRROR INSTALLATION

While supporting the clip position on the underside of the pivot plate with a flat-tipped screwdriver, press the clip at the front of the mirror to install the bottom of the mirror.

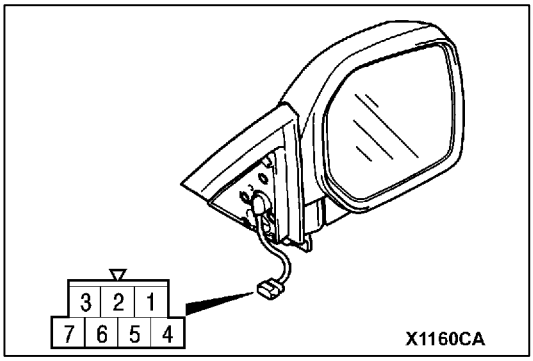


## INSPECTION

### MIRROR ASSEMBLY OPERATION CHECK

| Battery connection terminal | | | | | Direction of operation |
|---|---|---|---|---|---|
| 3 | 4 | 5 | 6 | 7 | |
| | ⊕ | | ⊖ | | UP |
| | ⊖ | | ⊕ | | DOWN |
| | | ⊖ | ⊕ | | LEFT |
| | | ⊕ | ⊖ | | RIGHT |
| ○ | | | | ○ | Vehicles with heater mirror |

Purchased from www.WorkshopManuals.co.uk

www.WorkshopManuals.co.uk

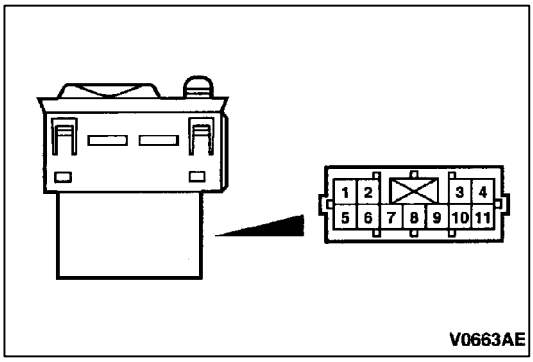


## MOTOR-DRIVEN REMOTE CONTROLLED MIRROR SWITCH CONTINUITY CHECK

| Switch | Switch position | Terminal No. | | | | | | | | | | | |
|---|---|---|---|---|---|---|---|---|---|---|---|---|---|
| | | Left side | | | | | Right side | | | | | 5 | 8 |
| | | 1 | 6 | 9 | 10 | 11 | 1 | 2 | 3 | 6 | 9 | | |
| Mirror adjust-ment switch | Up | ○ | ○ | | | | ○ | | ○ | ○ | | | |
| | | | | ○ | | ○ | | | ○ | | ○ | | |
| | Down | | ○ | ○ | | | ○ | | ○ | | | | |
| | | ○ | | | | ○ | | | | ○ | ○ | | |
| | Left | | ○ | ○ | | | ○ | ○ | | | | | |
| | | ○ | | | ○ | | | | | ○ | ○ | | |
| | Right | ○ | ○ | | | | ○ | | | ○ | | | |
| | | | | ○ | ○ | | | ○ | | | ○ | | |
| Illumination | | | | | | | | | | | | ○ | ○ |

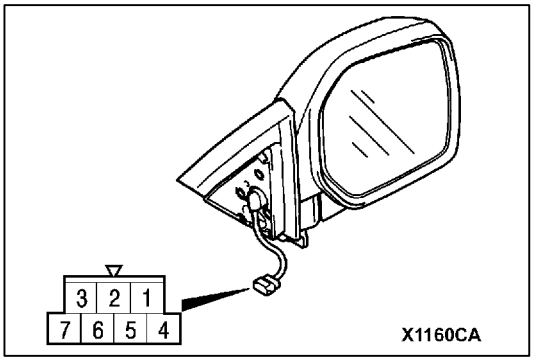


## THERMAL PRINTED WIRE FUNCTION CHECK

For vehicles with thermal printed wires, check that there is continuity between terminals (3) and (7).

Purchased from www.WorkshopManuals.co.uk

www.WorkshopManuals.co.uk

# Service Bulletins

**Click on the applicable bookmark to select the Service Bulletin.**

Purchased from www.WorkshopManuals.co.uk

www.WorkshopManuals.co.uk

MITSUBISHI MOTORS

# SERVICE BULLETIN

QUALITY INFORMATION ANALYSIS
OVERSEAS SERVICE DEPT. MITSUBISHI MOTORS CORPORATION

| SERVICE BULLETIN | No.: MSB-00E51-001 | | |
|---|---|---|---|
| | Date: 2001-06-03 | <Model> | <M/Y> |
| Subject: | CHANGE IN REMOVAL AND INSTALLATION OF SIDE STEP | (EC)PAJERO/ MONTERO(V60, 70) | 01-10 |
| Group: EXTERIOR | Draft No.: 00SY090514 | | |
| INFORMATION | INTERNATIONAL CAR ADMINISTRATION OFFICE | T.MASAKI-MANAGER TECHNICAL SERVICE PLANNING | |

**1. Description:**

The mounting bolts, nuts, and tightening torque values of the side step assembly have been changed.

**2. Applicable Manuals:**

| Manual | Pub. No. | Language | Page(s) |
|---|---|---|---|
| 2001 PAJERO Workshop Manual Chassis | PWJE0001(2/2) | (English) | 51-22 |
| 2001 MONTERO Workshop Manual Chassis | PWJS0002(2/2) | (Spanish) | |
| 2001 PAJERO/MONTERO Workshop Manual Chassis CD-ROM | PWJT0008R | (English) | |
| | PWJT0008R | (Spanish) | |
| | PWJT0008R | (French) | |
| | PWJT0008R | (German) | |

**3. Effective date:**

From August 2, 2000

Purchased from www.WorkshopManuals.co.uk

www.WorkshopManuals.co.uk

# SIDE STEP

## SIDE STEP
## REMOVAL AND INSTALLATION

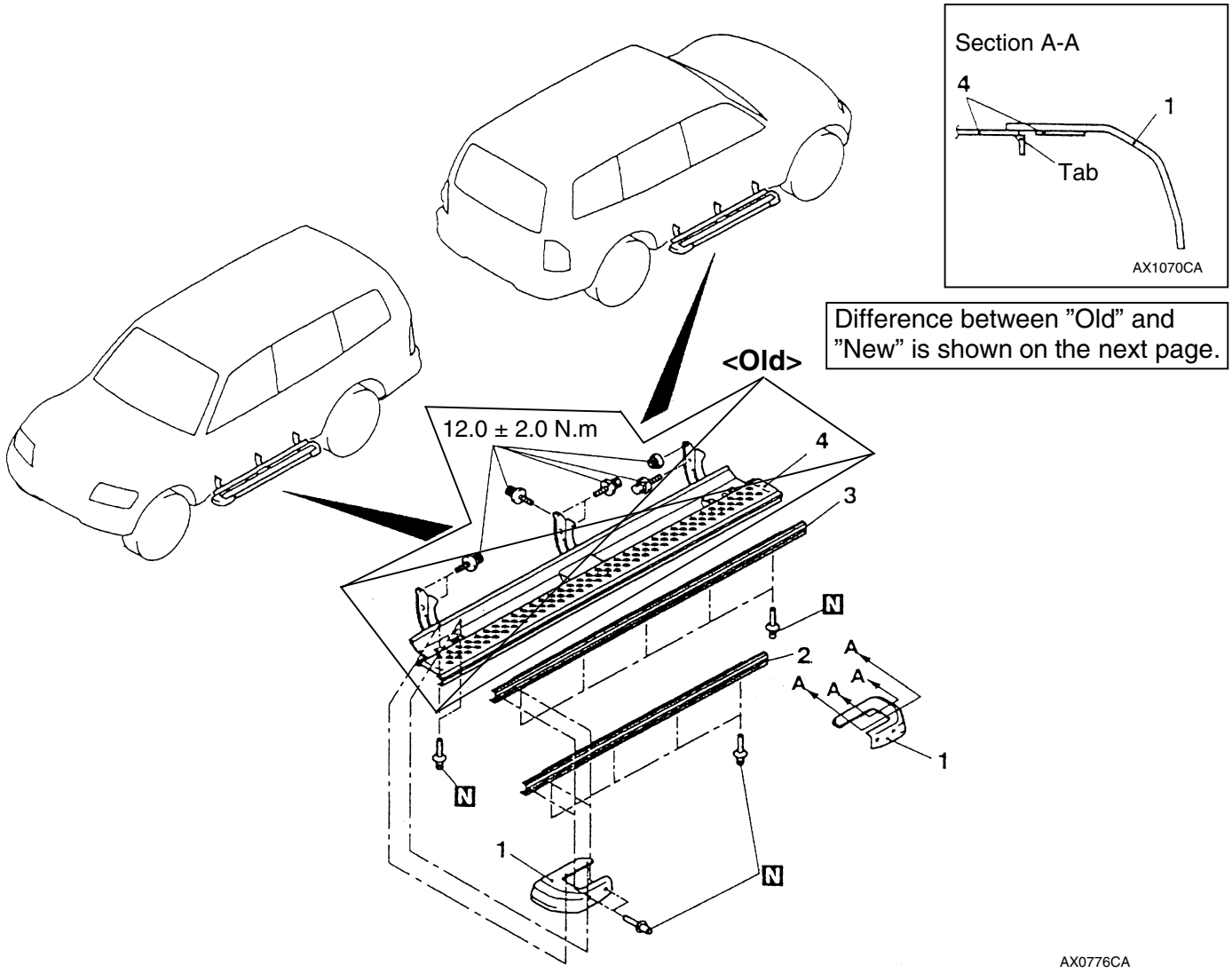


**Side step removal steps**

◄A► ►A◄ 1. Side step cover
◄A► ►A◄ 2. Non-slip cover <Short wheelbase>
◄A► ►A◄ 3. Non-slip cover <Long wheelbase>
4. Side step assembly


Purchased from www.WorkshopManuals.co.uk

www.WorkshopManuals.co.uk

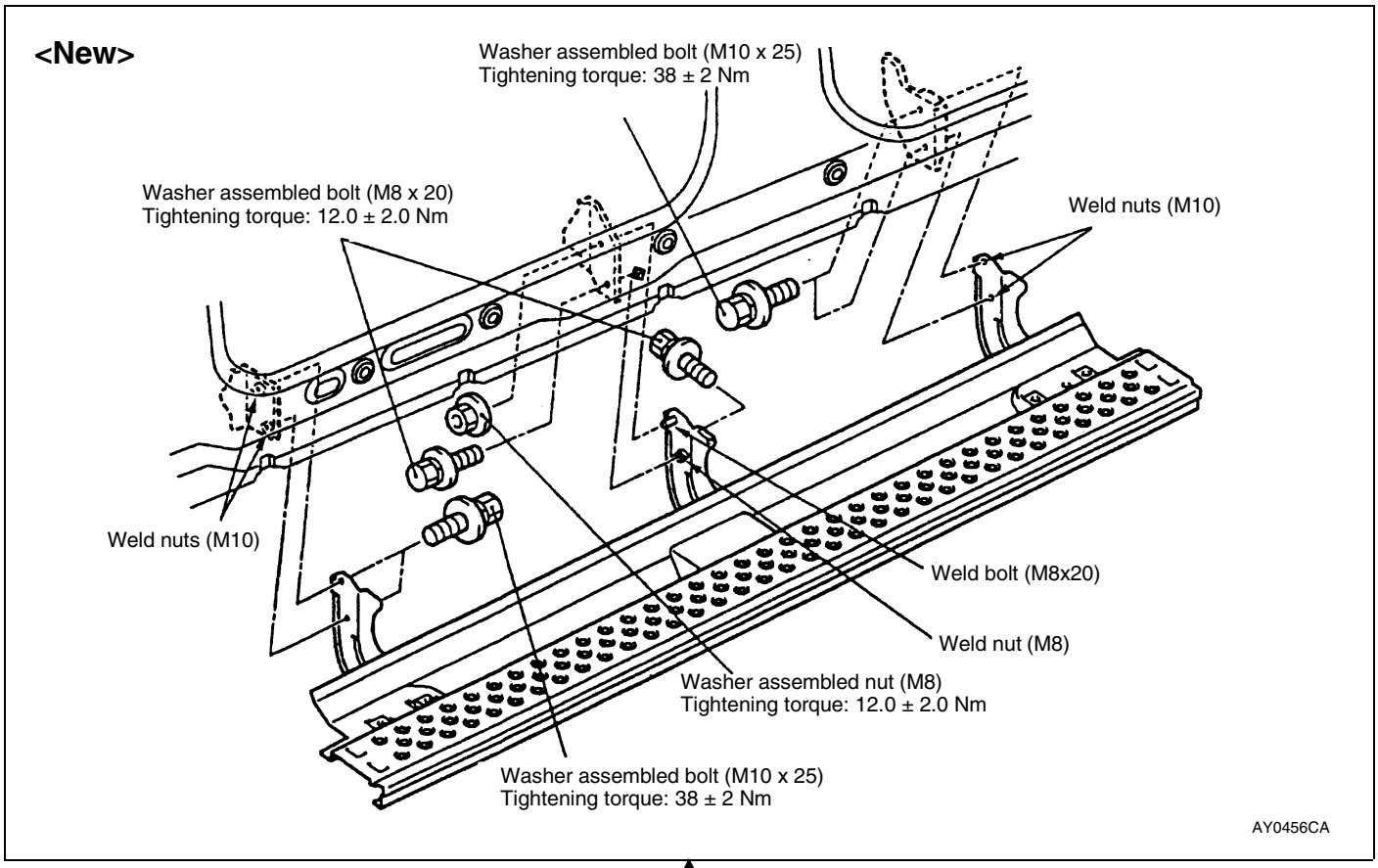


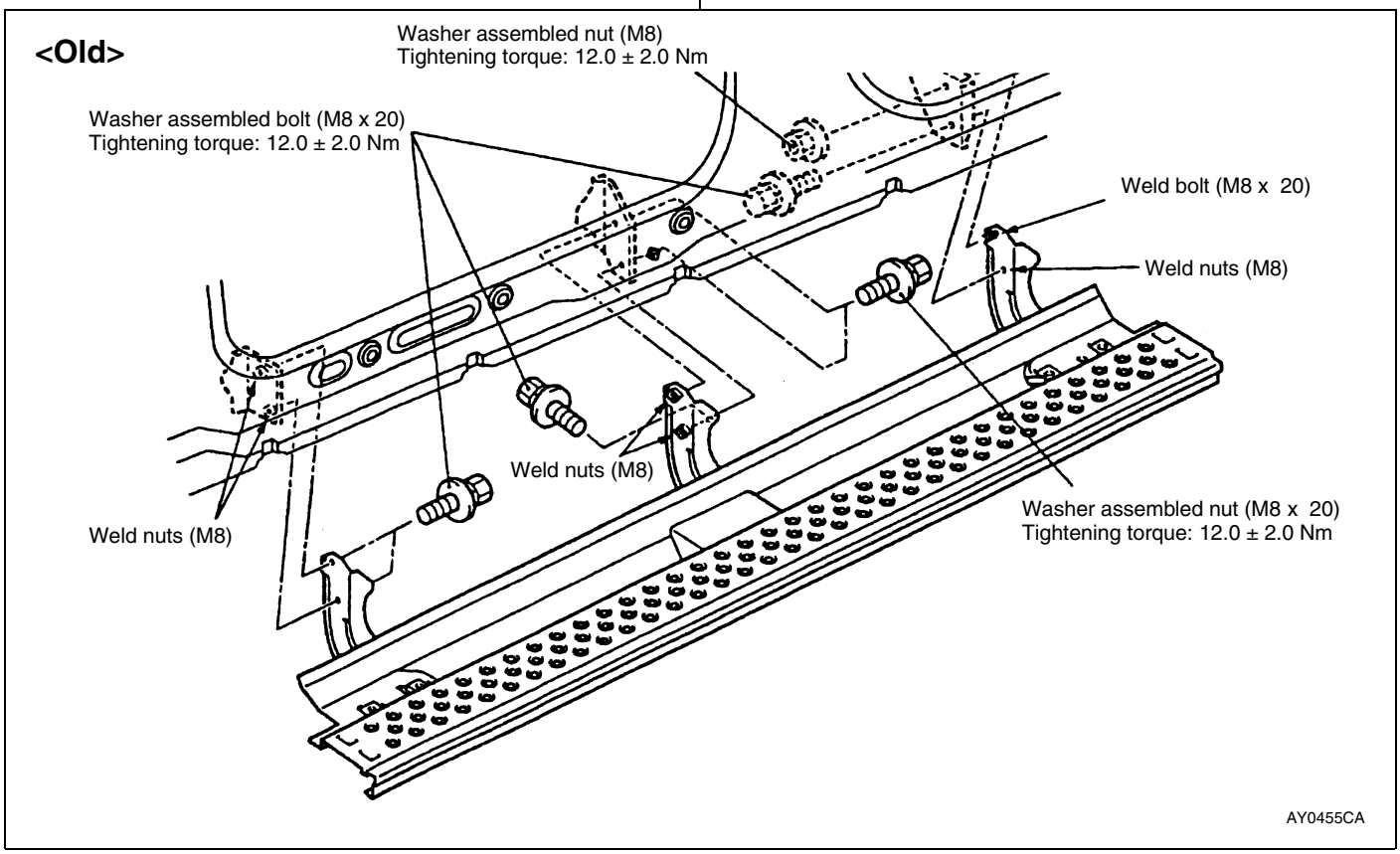




Purchased from www.WorkshopManuals.co.uk

www.workshopmanuals.co.uk

# GROUP 51
# EXTERIOR

## GENERAL

### OUTLINE OF CHANGES

Service procedure has been added as electric-retractable mirrors and the mirror control unit have been added.

## OUTSIDE MIRROR

## SPECIAL TOOLS

| Tool | Number | Name | Use |
|---|---|---|---|
| A<br> 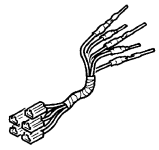 <br>B<br> 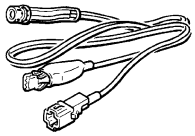 <br>C<br> 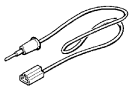 <br>D<br> <br>C991223 | MB991223<br>A: MB991219<br>B: MB991220<br>C: MB991221<br>D: MB991222 | Harness set<br>A: Test harness<br>B: LED harness<br>C: LED harness adapter<br>D: Probe | For checking voltage (continuity and value) at harnesses and connectors<br>A: For checking connector pin contact voltage<br>B: For checking power supply circuits<br>C: For checking power supply circuits<br>D: For connection to commercially available testers |

## TROUBLESHOOTING

### TROUBLE SYMPTOM CHART

| Trouble symptom | Inspection procedure | Reference page |
|---|---|---|
| Both of the electric retractable door mirrors do not work at all. | 1 | 51-2 |
| Either of the electric retractable mirrors does not work. | 2 | 51-3 |

Purchased from www.WorkshopManuals.co.uk

www.WorkshopManuals.co.uk

## Inspection Procedure 1

| Both of the electric retractable mirrors do not work at all. | Probable cause |
|---|---|
| The Mirror control unit controls the electric retractable mirror based on input signals from the following switches.<br>● Ignition switch (ACC)<br>● Remote control mirror switch (for retracting and returning the mirror)<br>If the electric retractable mirror does not operate normally, one of the above input circuit systems, the mirror assembly, or the Mirror control unit may be defective. | ● Remote control mirror switch fault<br>● Mirror assembly fault<br>● Mirror control unit fault<br>● Harness or connector fault |

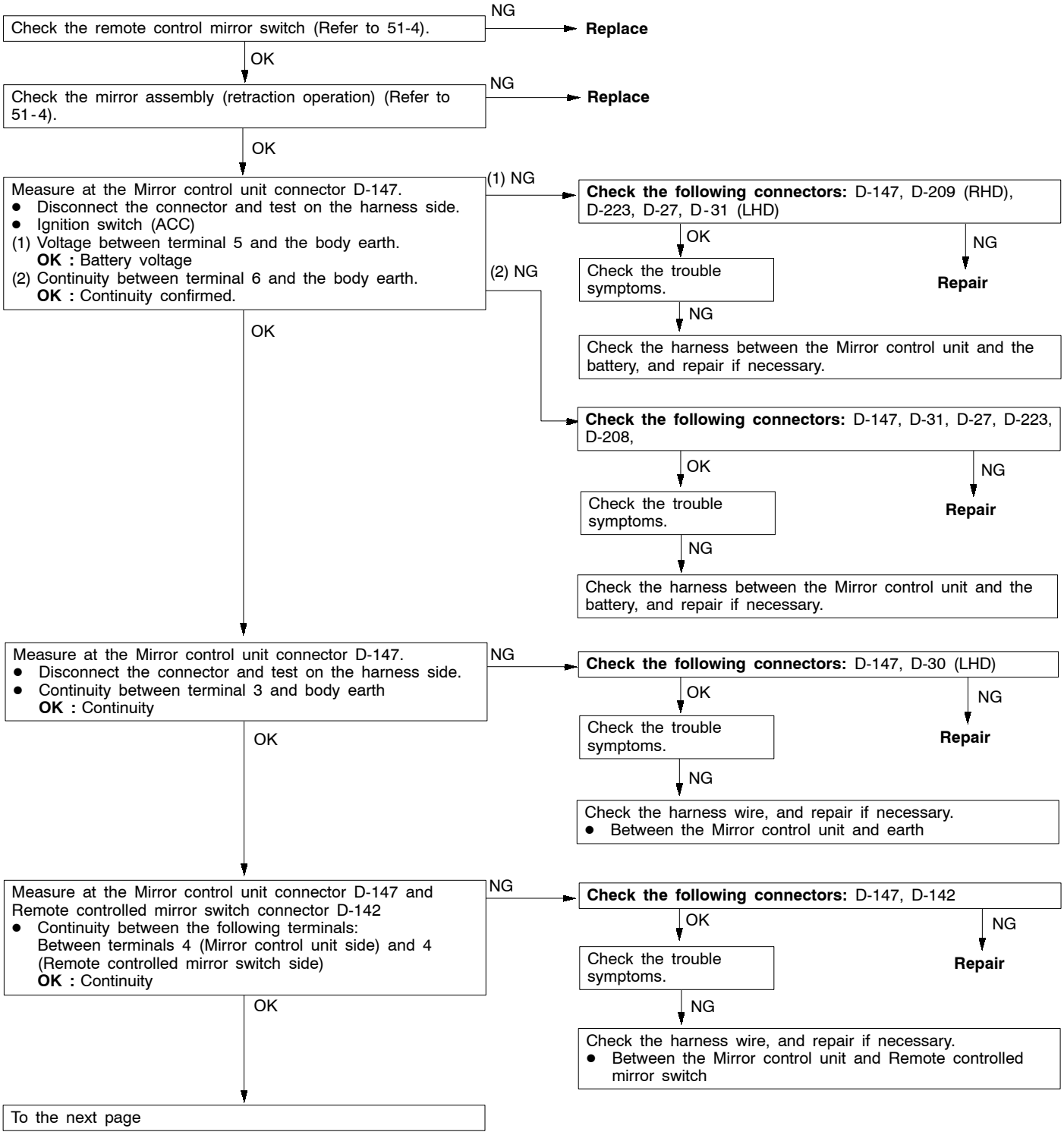


Purchased from www.WorkshopManuals.co.uk

www.WorkshopManuals.co.uk

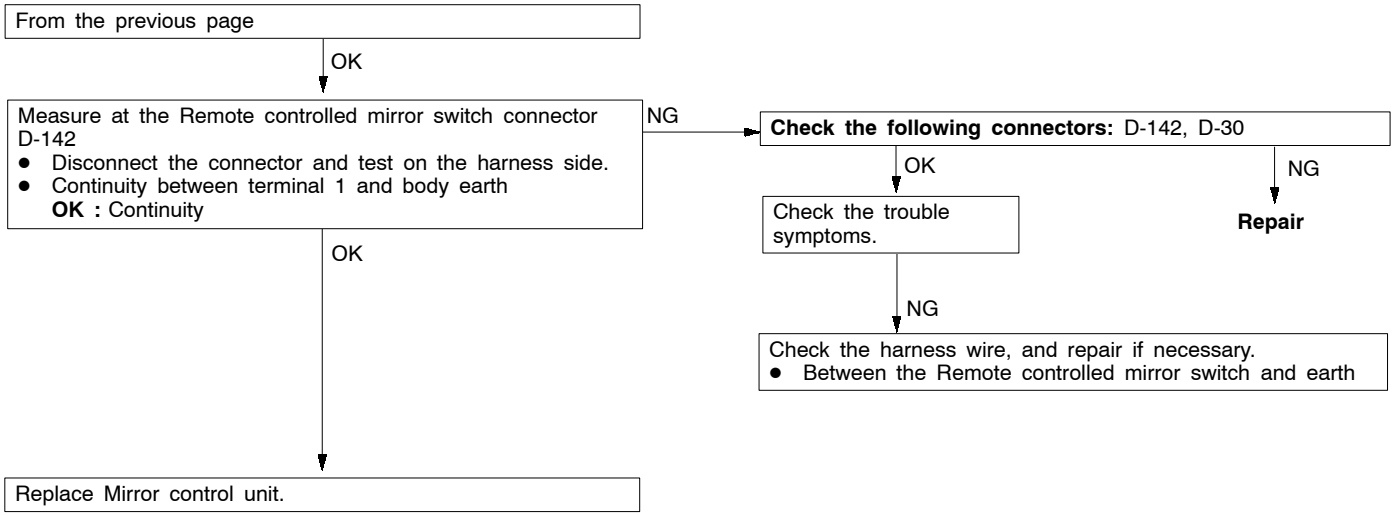


## Inspection Procedure 2

| Either of the electric retractable mirrors does not work. | Probable cause |
|---|---|
| The Mirror control unit controls the electric retractable mirror based on input signals from the following switches.<br>● Ignition switch (ACC)<br>● Remote control mirror switch (for retracting and returning the mirror)<br>If the electric retractable mirror does not operate normally, one of the above input circuit systems, the mirror assembly, or the Mirror control unit may be defective. | ● Mirror assembly fault<br>● Mirror control unit fault<br>● Harness or connector fault |

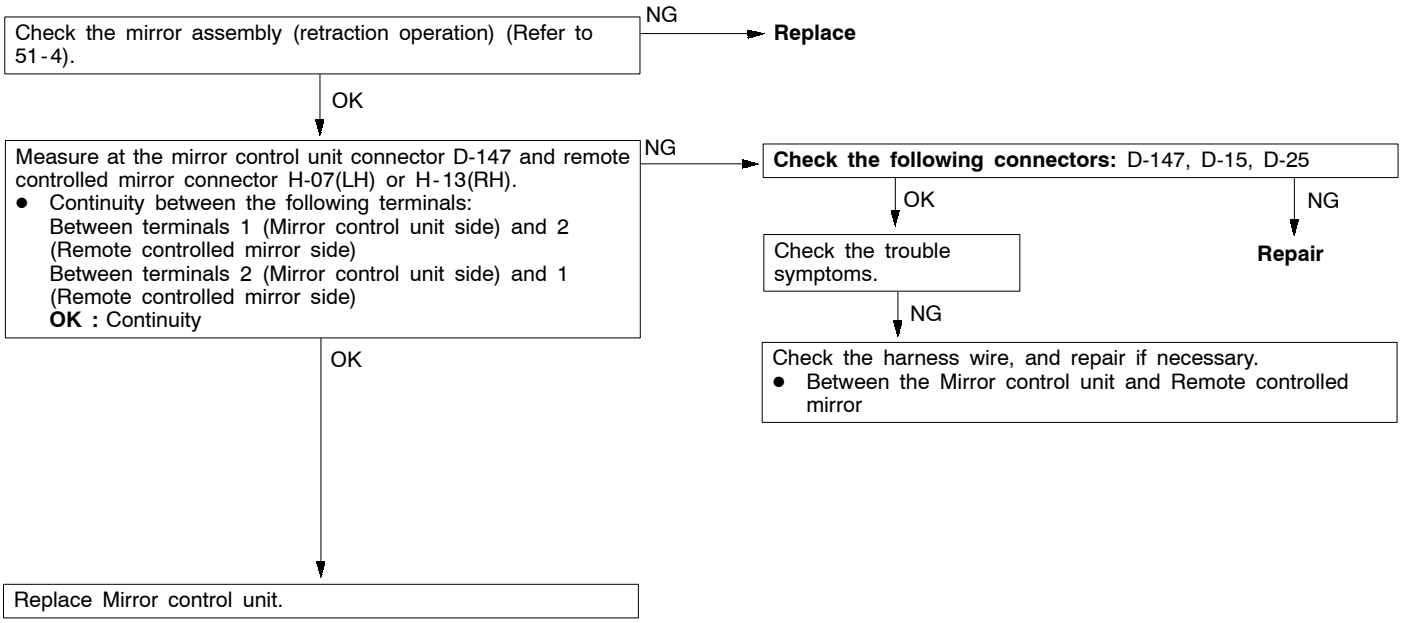


Purchased from www.WorkshopManuals.co.uk

www.WorkshopManuals.co.uk

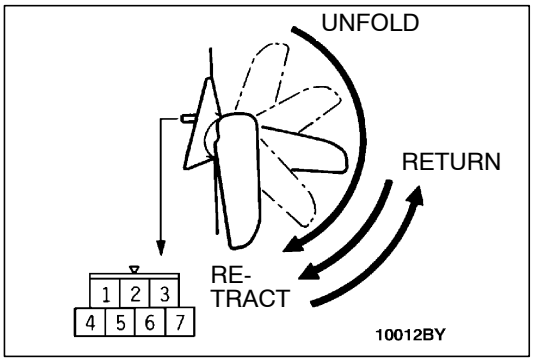


## INSPECTION

### MIRROR ASSEMBLY OPERATION CHECK

| Battery connection terminal | | | | | Direction of operation |
|---|---|---|---|---|---|
| 1 | 2 | 3 | 4 | 5 | |
| | | ⊕ | | ⊖ | UP |
| | | ⊖ | | ⊕ | DOWN |
| | | | ⊖ | ⊕ | LEFT |
| | | | ⊕ | ⊖ | RIGHT |
| ⊕ | ⊖ | | | | RETURN or UNFOLD position to RETRACT position |
| ⊖ | ⊕ | | | | RETRACT position to RETURN position |

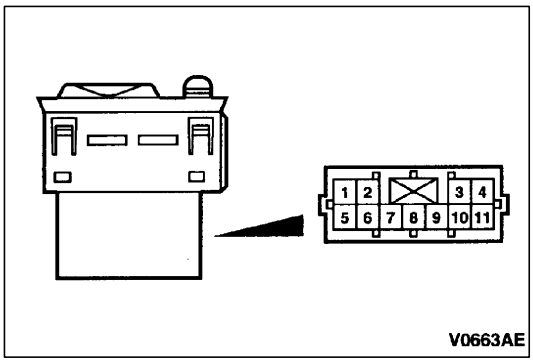


### MOTOR-DRIVEN REMOTE CONTROLLED MIRROR SWITCH CONTINUITY CHECK

| Switch | Switch position | Terminal No. | | | | | | | | | | | |
|---|---|---|---|---|---|---|---|---|---|---|---|---|---|
| | | Left side | | | | | Right side | | | | | 1 | 4 |
| | | 1 | 6 | 9 | 10 | 11 | 1 | 2 | 3 | 6 | 9 | | |
| Mirror adjustment switch | Up | ○ | ○ | | | | ○ | | | ○ | | | |
| | | | | ○ | | ○ | | | ○ | | ○ | | |
| | Down | | ○ | ○ | | | ○ | | ○ | | | | |
| | | ○ | | | | ○ | | | | ○ | ○ | | |
| | Left | | ○ | ○ | | | ○ | ○ | | | | | |
| | | ○ | | | ○ | | | | | ○ | ○ | | |
| | Right | ○ | ○ | | | | ○ | | | ○ | | | |
| | | | | ○ | ○ | | | ○ | | | ○ | | |
| Mirror retracting switch | Retract and return | | | | | | | | | | | ○ | ○ |

Purchased from www.WorkshopManuals.co.uk

www.WorkshopManuals.co.uk

# MIRROR CONTROL UNIT

## REMOVAL AND INSTALLATION

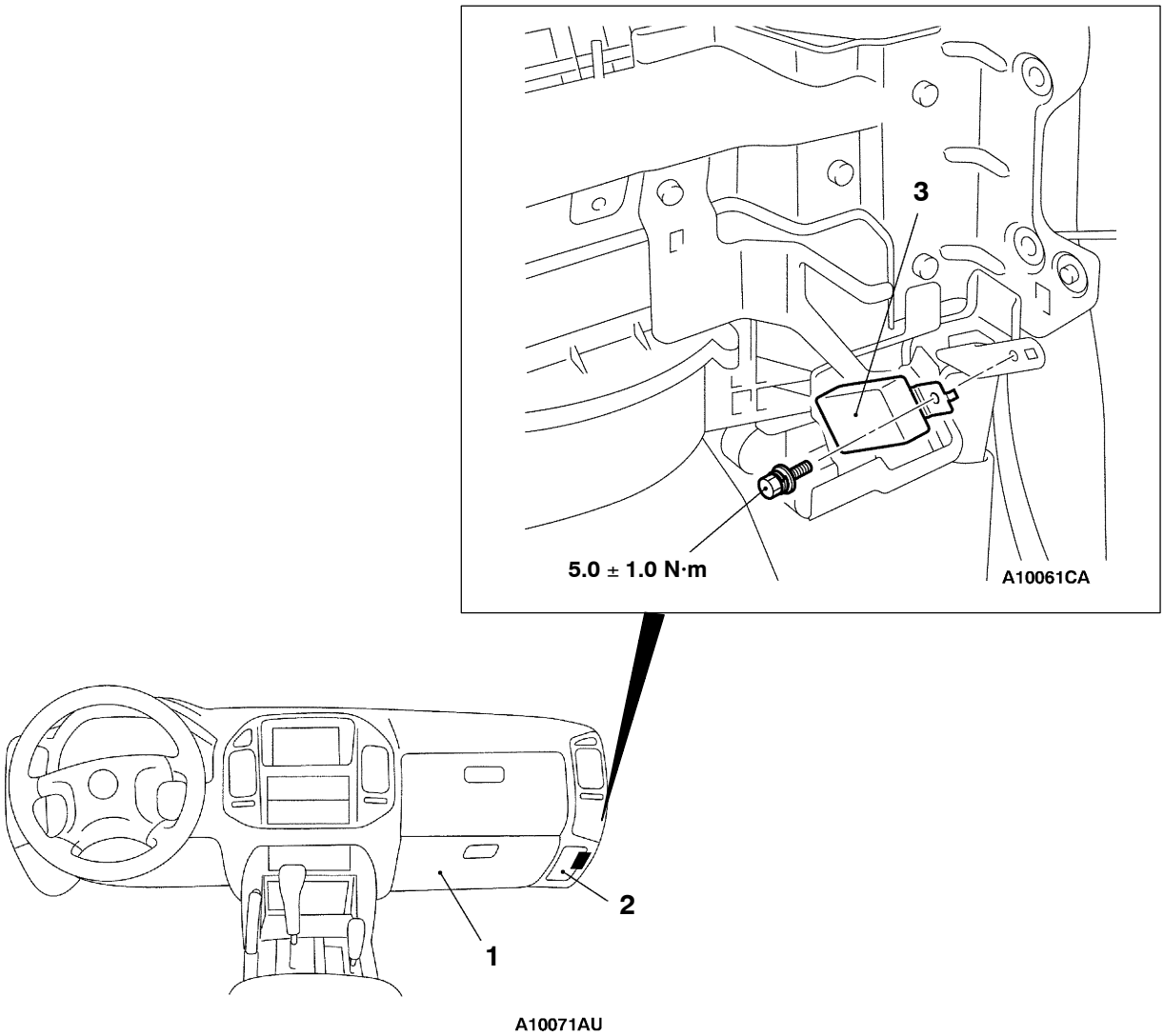


**Removal steps**

1. Glove box assembly
2. Corner lower panel (Passenger's side)
3. Mirror control unit

Purchased from www.WorkshopManuals.co.uk

www.WorkshopManuals.co.uk

# INTERIOR

**Click on the applicable bookmark to selected the required model year.**

Purchased from www.WorkshopManuals.co.uk

www.WorkshopManuals.co.uk

# INTERIOR

## CONTENTS

SERVICE SPECIFICATIONS . . . . . 3

SPECIAL TOOL . . . . . 3

INSTRUMENT PANEL
<L.H. DRIVE VEHICLES>* . . . . . 4

INSTRUMENT PANEL
<R.H. DRIVE VEHICLES>* . . . . . 8

FLOOR CONSOLE . . . . . 12

TRIMS . . . . . 13

SUNVISOR HOLDER . . . . . 17

FRONT SEAT . . . . . 18

REAR/SECOND SEAT . . . . . 25

THIRD SEAT . . . . . 35

FRONT SEAT BELT . . . . . 38

REAR SEAT BELT<SHORT WHEELBASE> . 40

SECOND/THIRD SEAT BELT
<LONG WHEELBASE> . . . . . 41

**WARNINGS REGARDING SERVICING OF SUPPLEMENTAL RESTRAINT SYSTEM (SRS) EQUIPPED VEHICLES**

**WARNING!**

**(1) Improper service or maintenance of any component of the SRS, or any SRS-related component, can lead to personal injury or death to service personnel (from inadvertent firing of the air bag) or to the driver (from rendering the SRS inoperative).**
**(2) Service or maintenance of any SRS component or SRS-related component must be performed only at an authorized MITSUBISHI dealer.**
**(3) MITSUBISHI dealer personnel must thoroughly review this manual, and especially its GROUP 52B - Supplemental Restraint System (SRS) before beginning any service or maintenance of any component of the SRS or any SRS-related component.**

NOTE

The SRS includes the following components: front impact sensors, SRS-ECU, SRS warning lamp, air bag module, clock spring and interconnecting wiring. Other SRS-related components (that may have to be removed/installed in connection with SRS service or maintenance) are indicated in the table of contents by an asterisk (*).

Purchased from www.WorkshopManuals.co.uk

www.WorkshopManuals.co.uk

## SERVICE SPECIFICATIONS

| Items | | Standard value | |
|---|---|---|---|
| | | Sport seat | Except sport seat |
| Seat cushion heater resistance Ω (at cabin temperature of 20°C) | Between terminals 1 and 3 | 6.4±10% | 5.0 ± 10% |
| | Between terminals 2 and 3 | 6.0±10% | 5.4 ± 10% |
| Seatback heater resistance Ω (at cabin temperature of 20°C) | Between terminals 1 and 2 | 6.0±10% | 6.0 ± 10% |

## SPECIAL TOOL

| Tool | Number | Name | Use |
|---|---|---|---|
| 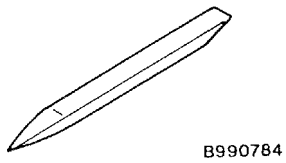  | MB990784 | Ornament remover | Removal of switch, trim, etc. |

Purchased from www.WorkshopManuals.co.uk

www.WorkshopManuals.co.uk

# INSTRUMENT PANEL <L.H. DRIVE VEHICLES>

**Caution**
**For removal of instrument panel and the passenger's side air bag module, always observe the service procedures described in GROUP 52B - Air Bag Module and Clock Spring.**

## REMOVAL AND INSTALLATION

For installation of the instrument panel, the bolts and screws described below are used. They are indicated by symbols in the illustration.

| Name | Symbol | Size mm (D x L) | Colour | Shape |
|---|---|---|---|---|
| Tapping screw | A | 5 x 10 | - | 19Z0004 |
| | B | 5 x 12 | - | |
| | C | 5 x 16 | - | 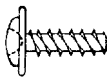 19Z0022 |
| | D | 5 x 16 | - | |
| | E | 5 x 16 | Black | |
| | F | 5 x 20 | - | |
| | G | 5 x 20 | Black | |
| | H | 5 x 16 | - | 19Z0003 |
| Washer assembled screw | I | 5 x 16 | - | 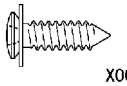 X0010BY |
| Washer assembled bolt | J | 5 x 20 | Black | 19Z0005 |
| | K | 6 x 16 | - | |
| | L | 6 x 16 | Black | |
| | M | 6 x 20 | - | 19Z0010 |

D = Thread diameter
L = Effective thread length

Purchased from www.WorkshopManuals.co.uk

www.WorkshopManuals.co.uk

**CAUTION: SRS**
**When removing and installing the instrument panel (vehicles equipped with SRS), do not let it bump against the SRS-ECU.**

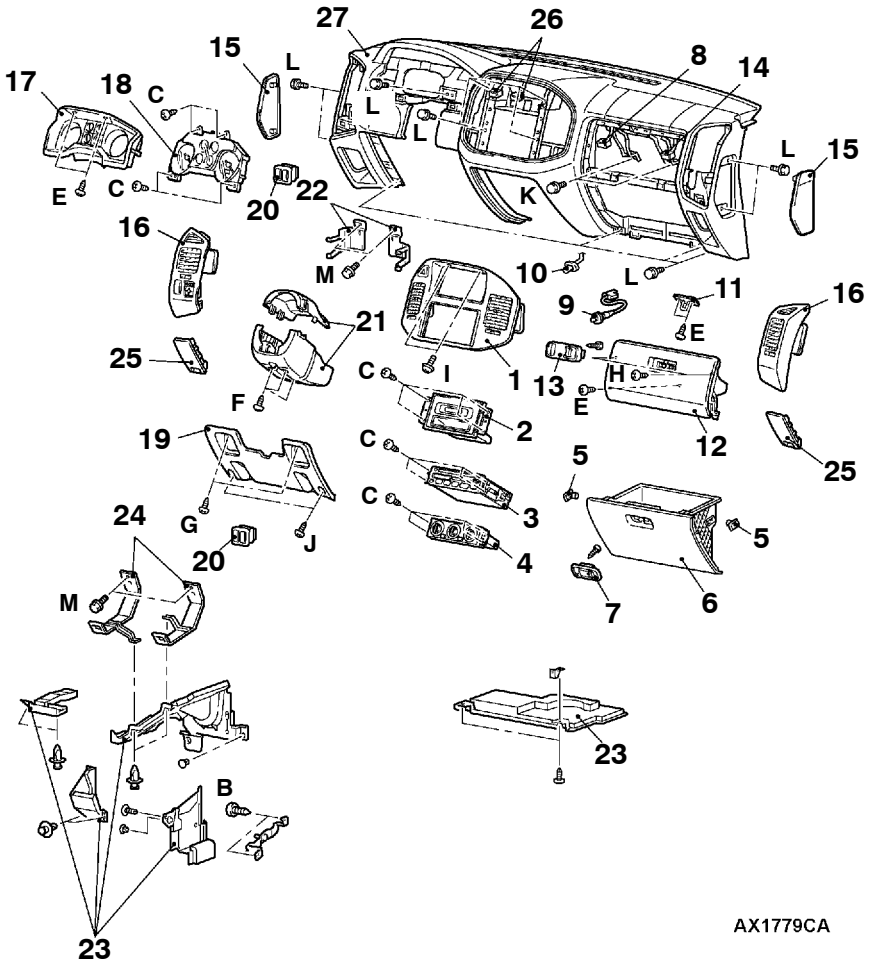


**Removal steps**

- Rear floor console assembly (Refer to P.52A-12.)
- CD player unit (Refer to GROUP 54A.)
- Front floor console (Refer to P.52A-12.)

1. Center panel assembly
2. Center display
3. Radio and tape player
4. Manual air conditioner assembly
5. Glove box stopper
6. Glove box assembly
7. Glove box lock
8. Glove box lamp switch harness connector
9. Glove box lamp switch
10. Glove box lamp
11. Upper glove box striker
12. Upper glove box assembly
13. Upper glove box lid lock
14. Front passenger's side air bag module harness connector
15. Instrument panel side cover
16. Air outlet assembly
17. Meter bezel
18. Combination meter assembly
    - Hood opener lever (Refer to GROUP 42.)
    - Fuel lid opener lever (Refer to GROUP 42.)
19. Lower panel
20. Switch panel
21. Column cover
22. Stay A
    - Assist grip (Refer to P.52A-13,15.)
    - Front pillar trim (Refer to P.52A-13,15.)
23. Under cover assembly
24. Stay B
25. Corner lower panel
26. Photo sensor harness connector
    - Steering shaft assembly bolt (Refer to GROUP 37A.)
27. Instrument panel assembly

Purchased from www.WorkshopManuals.co.uk

www.WorkshopManuals.co.uk

## CLIP AND CLAW POSITION

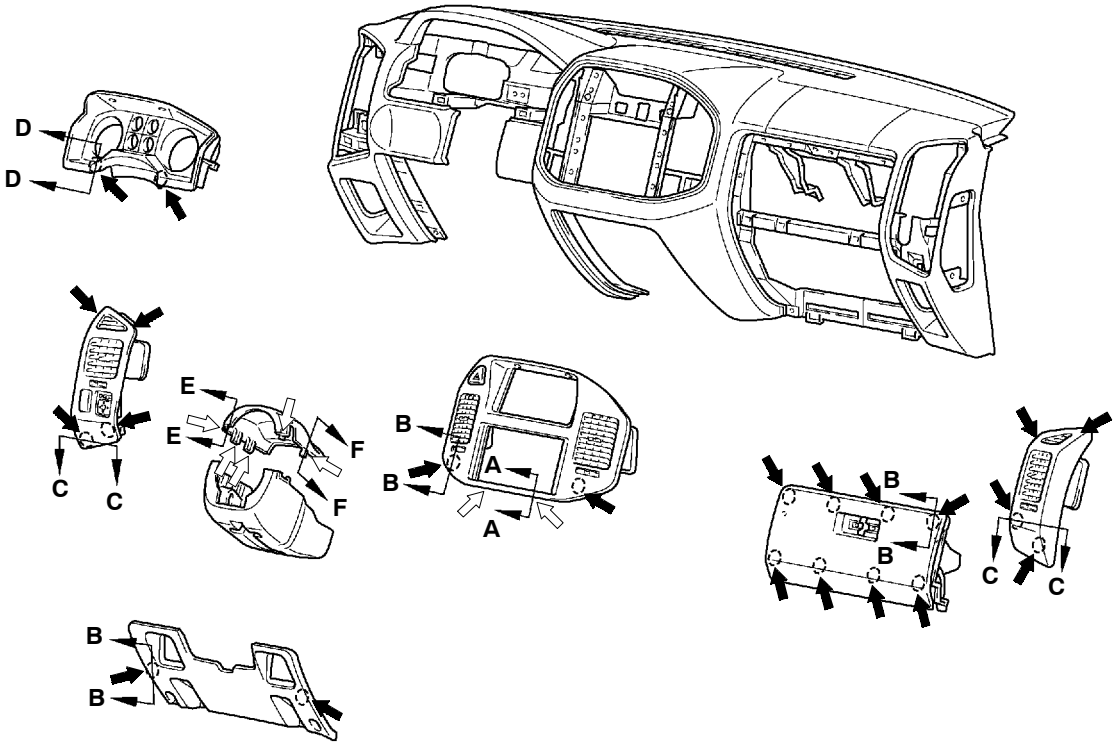


NOTE
⬅ : Clip position
⇦ : Claw position

ACX01533

**Section A - A**

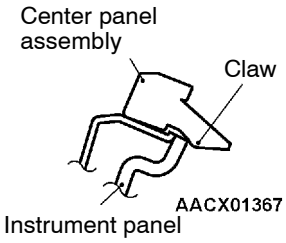


**Section B - B**

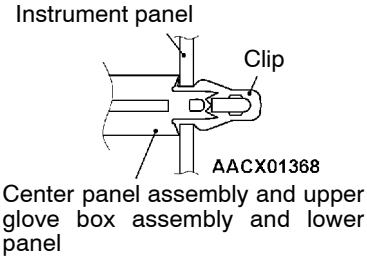


**Section C - C**

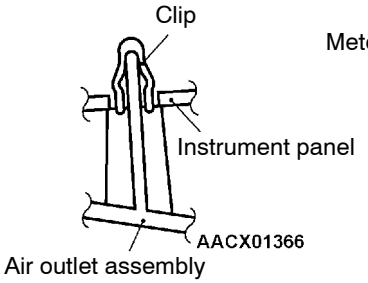


**Section D - D**

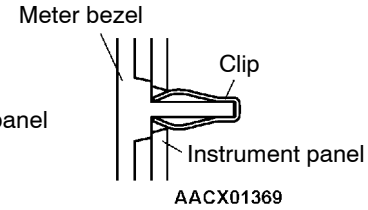


**Section E - E**

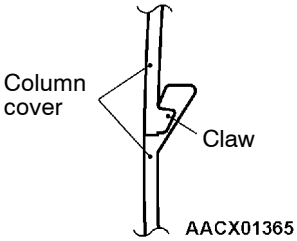


**Section F - F**

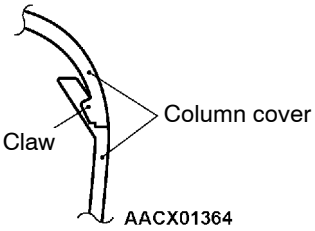


Purchased from www.WorkshopManuals.co.uk

www.WorkshopManuals.co.uk

## DISASSEMBLY AND REASSEMBLY

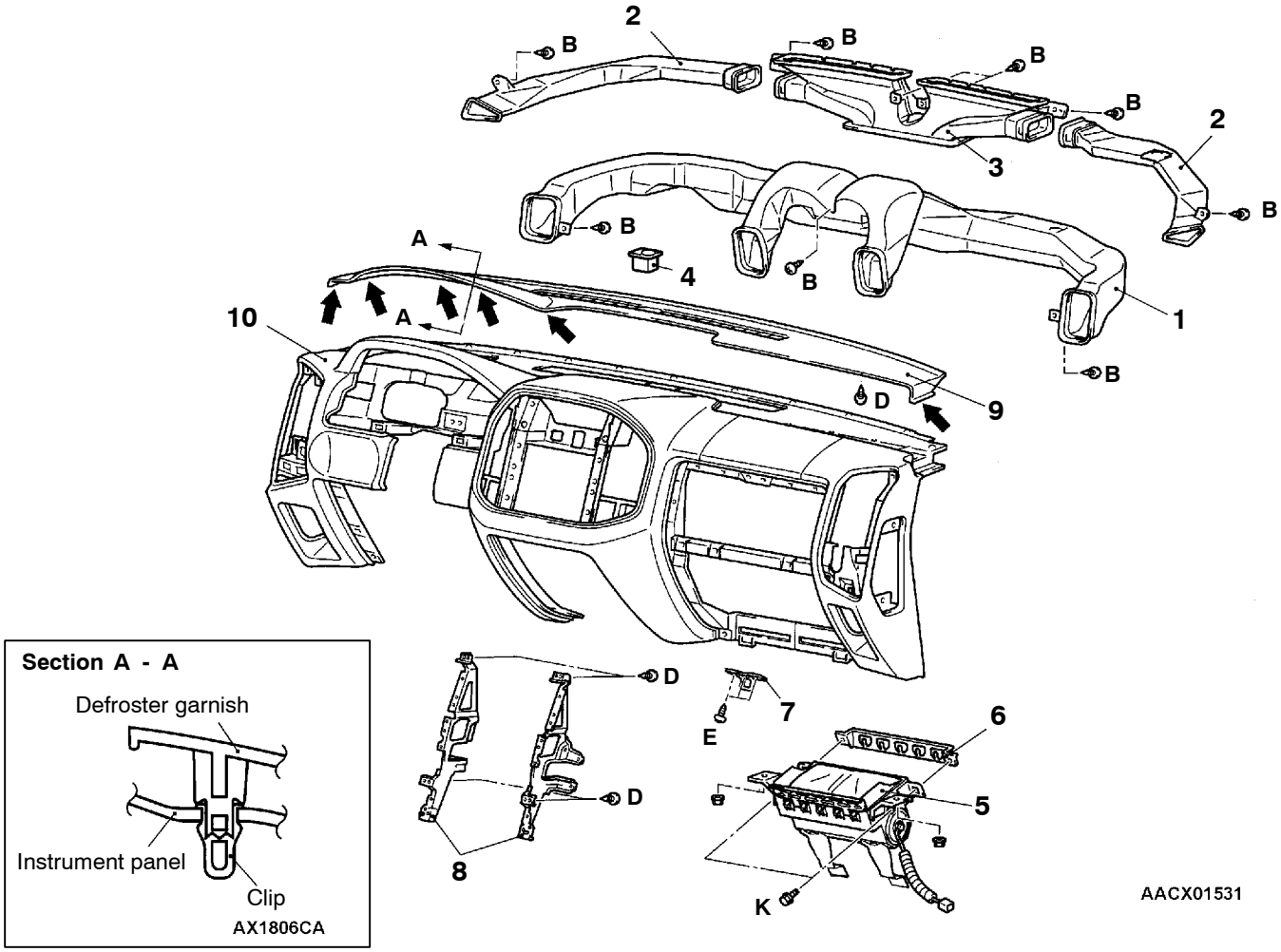


**Disassembly steps**

1. Distribution duct
2. Side defroster duct
3. Center defroster duct
4. Photo sensor
5. Front passenger's side air bag module
6. Air bag side plate
7. Glove box striker
8. Instrument panel center reinforcement
9. Defroster garnish
10. Instrument panel

Purchased from www.WorkshopManuals.co.uk

www.WorkshopManuals.co.uk

# INSTRUMENT PANEL <R.H. DRIVE VEHICLES>

**Caution**
**For removal of instrument panel and the passenger's side air bag module, always observe the service procedures described in GROUP 52B - Air Bag Module and Clock Spring.**

## REMOVAL AND INSTALLATION

For installation of the instrument panel, the bolts and screws described below are used. They are indicated by symbols in the illustration.

| Name | Symbol | Size mm (D x L) | Colour | Shape |
|---|---|---|---|---|
| Tapping screw | a | 5 x 10 | - | 19Z0004 |
| | b | 5 x 12 | - | |
| | c | 5 x 16 | - | 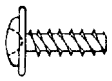 19Z0022 |
| | d | 5 x 16 | - | |
| | e | 5 x 16 | Black | |
| | f | 5 x 20 | - | |
| | g | 5 x 20 | Black | |
| | h | 5 x 16 | - | 19Z0003 |
| Washer assembled screw | i | 5 x 16 | - | 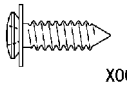 X0010BY |
| Washer assembled bolt | j | 5 x 20 | Black | 19Z0005 |
| | k | 6 x 16 | - | |
| | l | 6 x 16 | Black | |
| | m | 6 x 20 | - | 19Z0010 |

D = Thread diameter
L = Effective thread length

Purchased from www.WorkshopManuals.co.uk

www.WorkshopManuals.co.uk

**CAUTION: SRS**
**When removing and installing the instrument panel (vehicles equipped with SRS), do not let it bump against the SRS-ECU.**

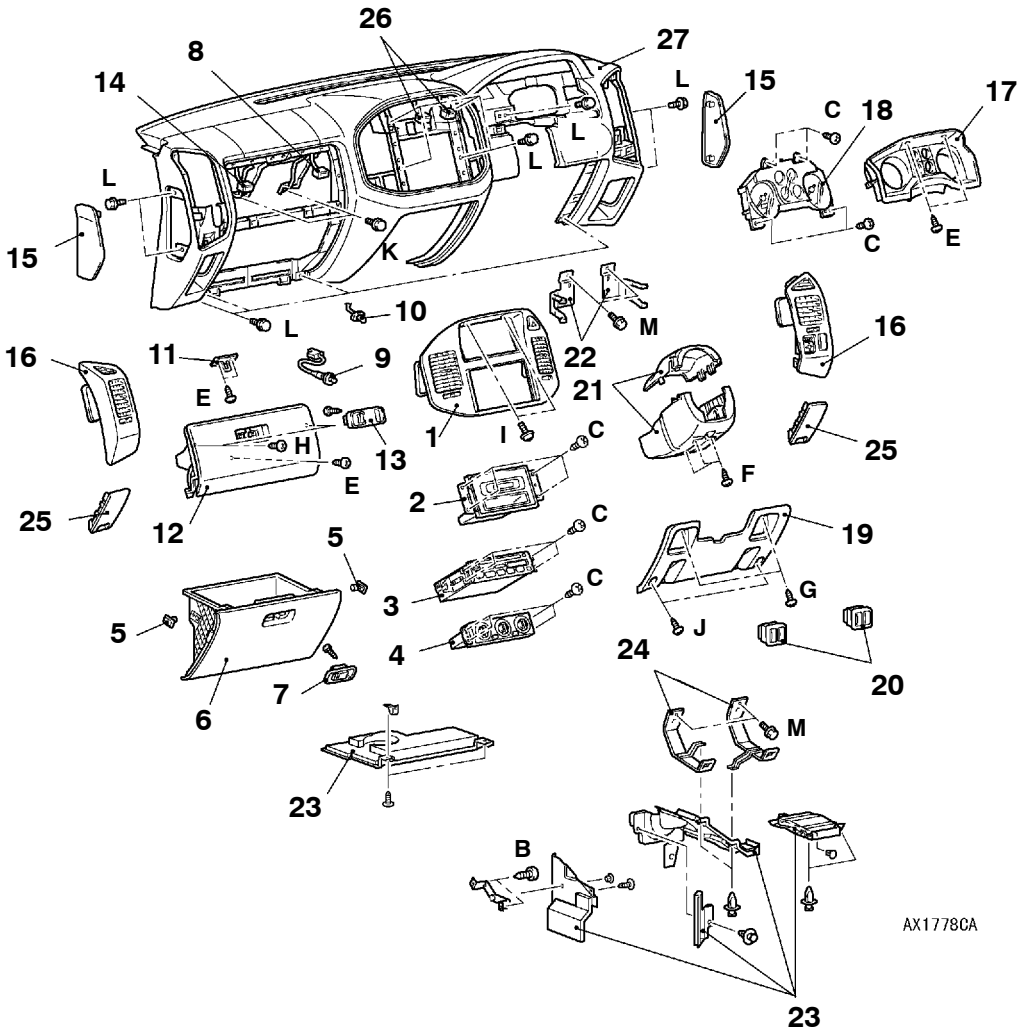


**Removal steps**

- Rear floor console assembly (Refer to P.52A-12.)
- CD player unit (Refer to GROUP 54A.)
- Front floor console (Refer to P.52A-12.)

1. Center panel assembly
2. Center display
3. Radio and tape player
4. Manual air conditioner assembly
5. Glove box stopper
6. Glove box assembly
7. Glove box lock
8. Glove box lamp switch harness connector
9. Glove box lamp switch
10. Glove box lamp
11. Upper glove box striker
12. Upper glove box assembly
13. Upper glove box lid lock
14. Front passenger's side air bag module harness connector
15. Instrument panel side cover
16. Air outlet assembly
17. Meter bezel
18. Combination meter assembly
    - Hood opener lever (Refer to GROUP 42.)
    - Fuel lid opener lever (Refer to GROUP 42.)
19. Lower panel
20. Switch panel
21. Column cover
22. Stay A
    - Assist grip (Refer to P.52A-13,15.)
    - Front pillar trim (Refer to P.52A-13,15.)
23. Under cover assembly
24. Stay B
25. Corner lower panel
26. Photo sensor harness connector
    - Steering shaft assembly bolt (Refer to GROUP 37A.)
27. Instrument panel assembly

Purchased from www.WorkshopManuals.co.uk

www.WorkshopManuals.co.uk

## CLIP AND CLAW POSITION

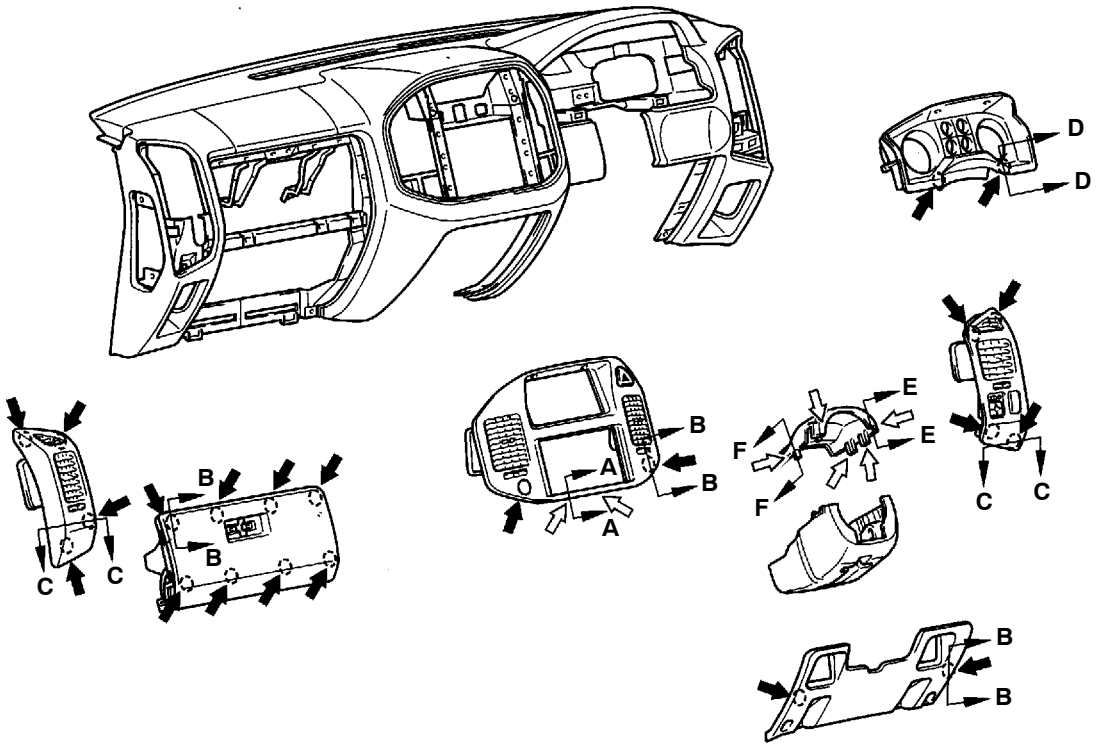


NOTE
⬅ : Clip position
⇦ : Claw position

**Section A - A**

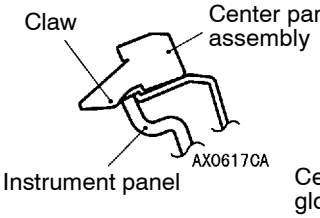


**Section B - B**

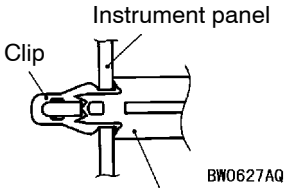


Center panel assembly and upper glove box assembly and lower panel

**Section C - C**

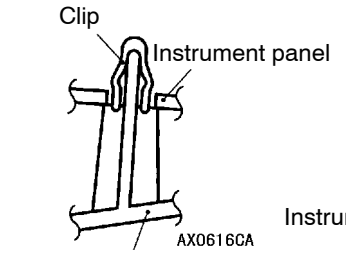


**Section D - D**

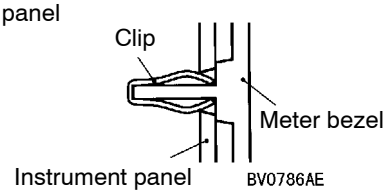


**Section E - E**

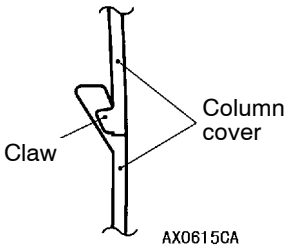


**Section F - F**

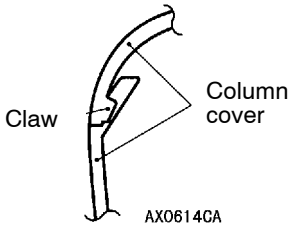


Purchased from www.WorkshopManuals.co.uk

www.WorkshopManuals.co.uk

## DISASSEMBLY AND REASSEMBLY

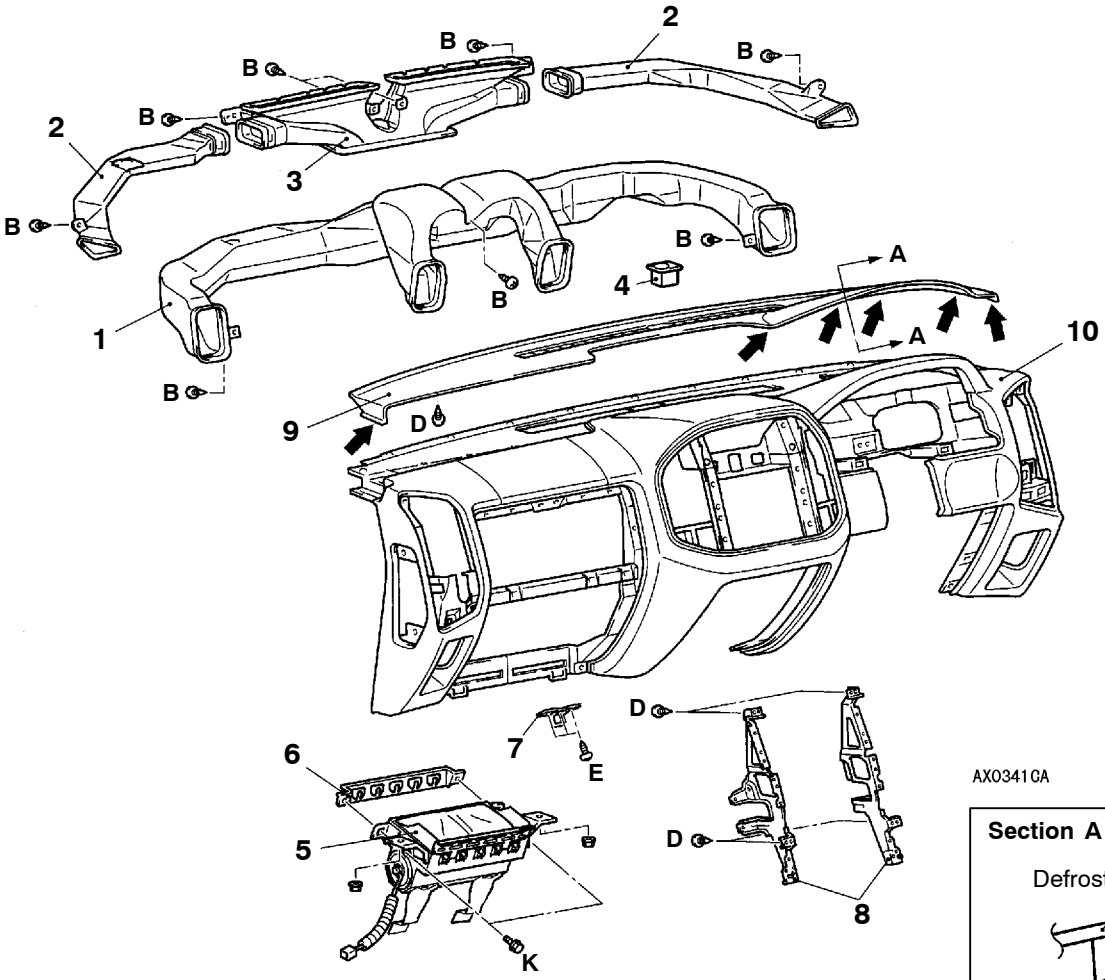


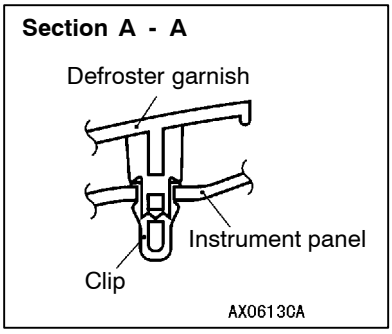


**Disassembly steps**

1. Distribution duct
2. Side defroster duct
3. Center defroster duct
4. Photo sensor
5. Front passenger's side air bag module
6. Air bag side plate
7. Glove box striker
8. Instrument panel center reinforcement
9. Defroster garnish
10. Instrument panel

Purchased from www.WorkshopManuals.co.uk

www.WorkshopManuals.co.uk

# FLOOR CONSOLE

## REMOVAL AND INSTALLATION

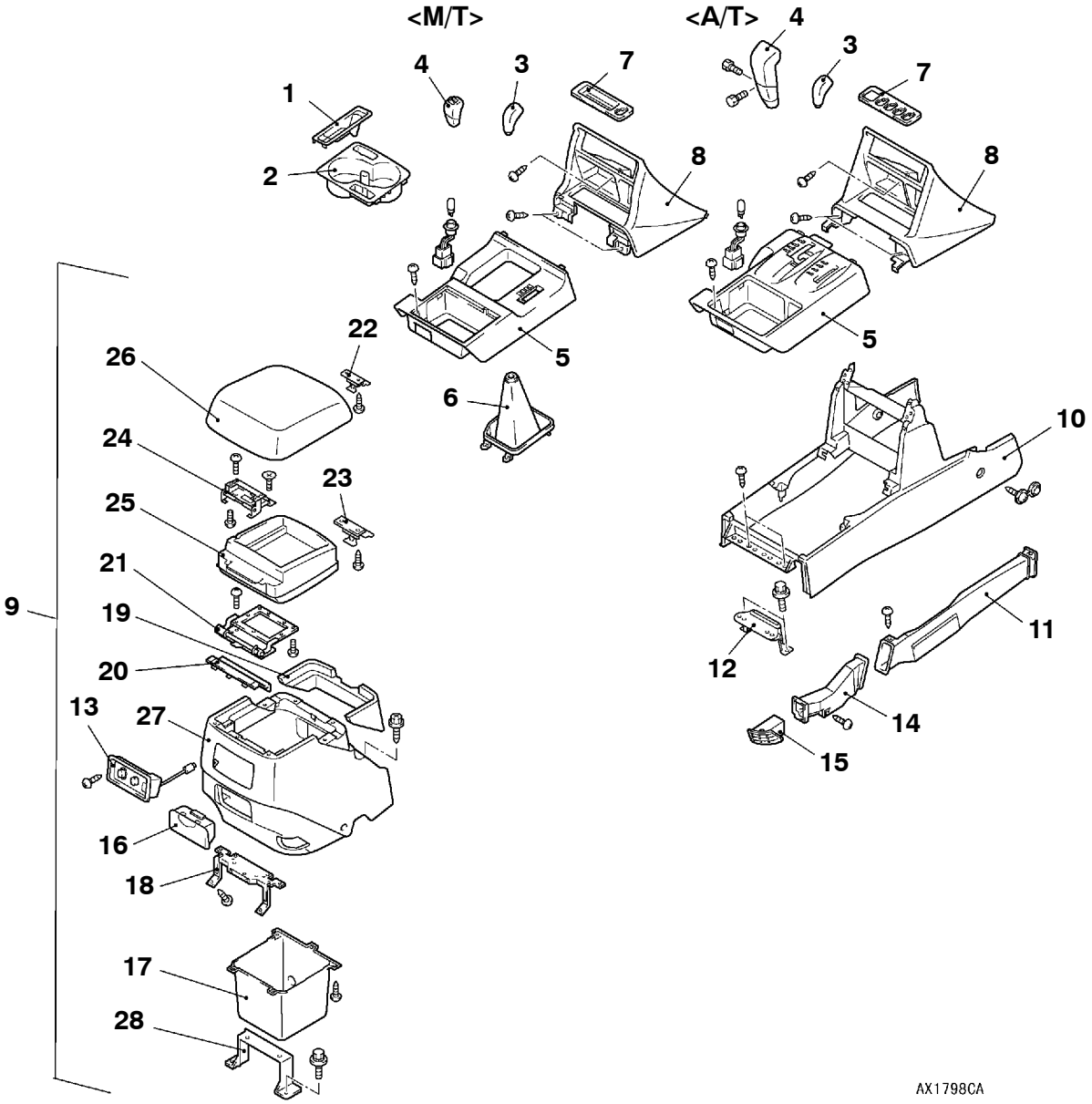


**Removal steps**

1. Parking brake lever cover
2. Cup holder
3. Transfer shift knob
4. Selector lever knob
5. Indicator panel
6. Shift lever cover
7. Switch panel
8. Lower center panel
- Parking brake lever mounting bolt
9. Rear floor console assembly
10. Front floor console
11. Rear heater duct A
12. Console bracket A
13. Rear control assembly
14. Rear heater duct B
15. Rear heater duct nozzle
16. Rear floor console ashtray
17. Rear floor console box
18. Rear floor console bracket
19. Rear floor console upper cover
20. Rear floor console hinge cover
21. Hinge bracket
22. Lock A
23. Lock B
24. Lid bracket
25. Lid box
26. Lid assembly
27. Rear floor console
28. Console bracket B

Purchased from www.WorkshopManuals.co.uk

www.WorkshopManuals.co.uk

# TRIMS

## REMOVAL AND INSTALLATION

### <Short Wheelbase>

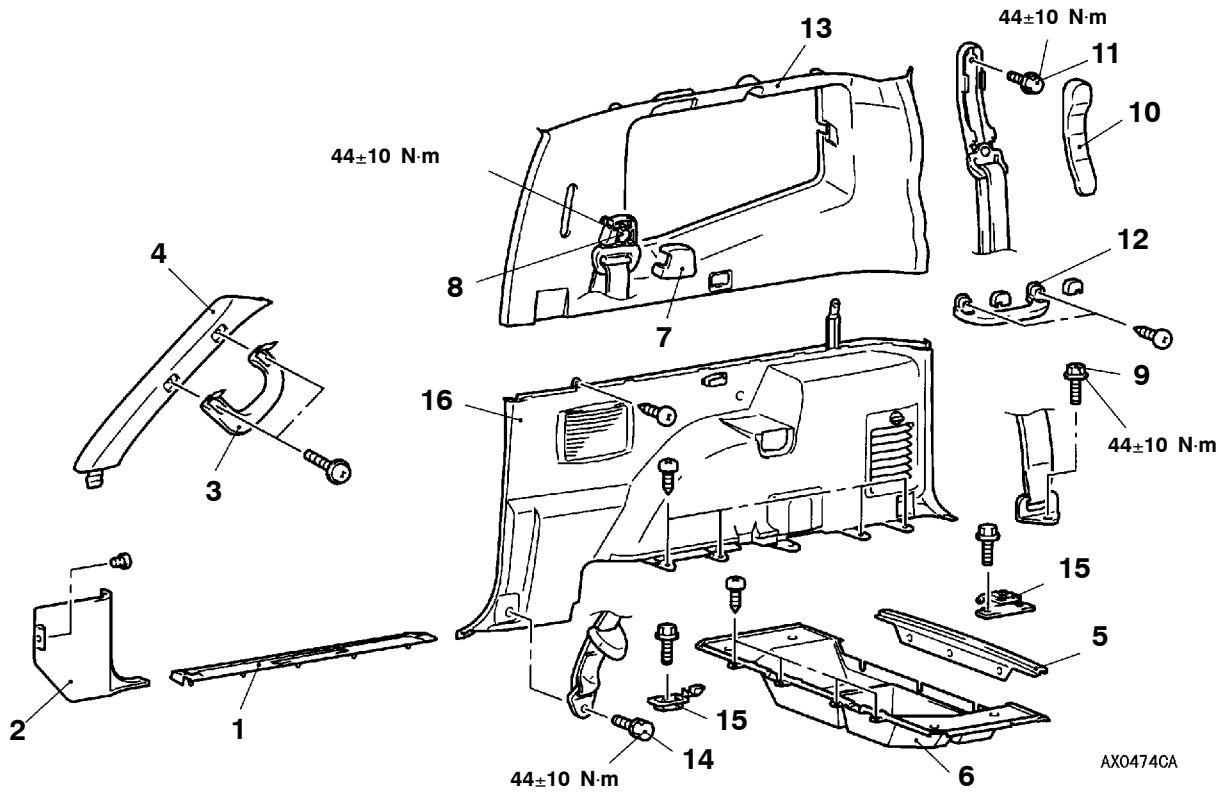


NOTE
For door trims, refer to GROUP 42.

1. Front scuff plate
2. Cowl side trim
3. Assist grip
4. Front pillar trim
5. Back door scuff plate
6. Luggage floor box
7. Sash guide cover
8. Front seat belt connection
9. Rear seat belt connection
10. Sash guide cover
11. Rear seat belt connection
12. Assist grip
13. Quarter trim, upper
14. Front seat belt connection
15. Luggage hook
16. Quarter trim, lower

Purchased from www.WorkshopManuals.co.uk

www.WorkshopManuals.co.uk

## CLIP AND CLAW POSITION

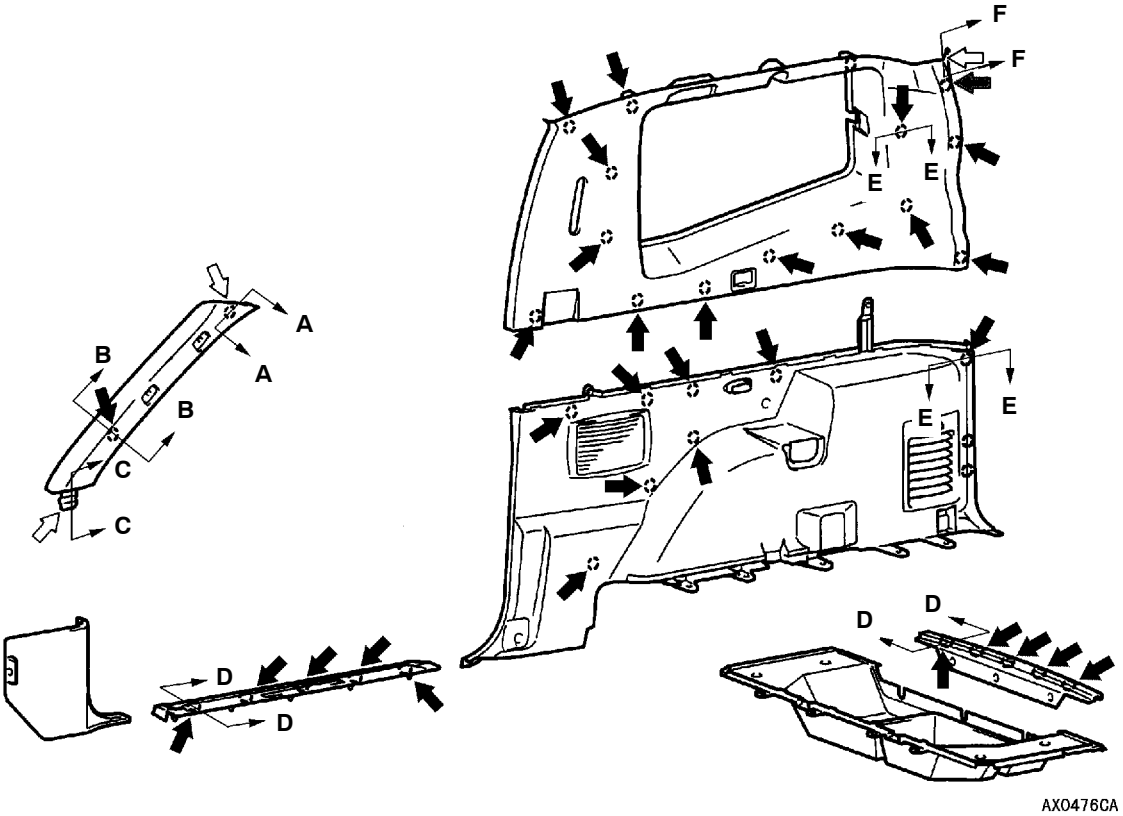


NOTE
⬅ : Clip position
⇦ : Claw position

**Section A - A**

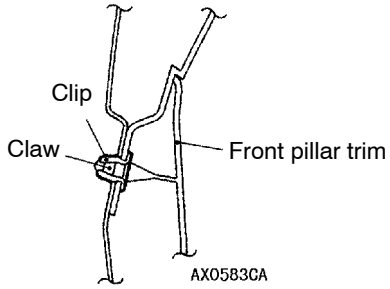


**Section B - B**

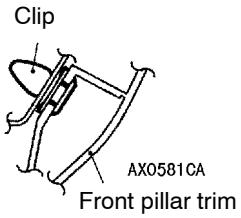


**Section C - C**

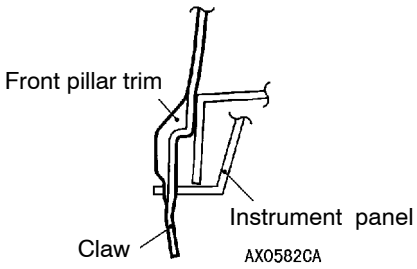


**Section D - D**

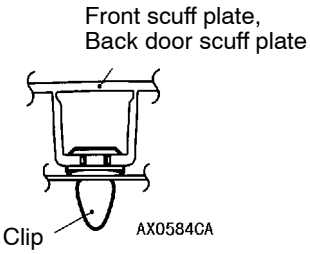


**Section E - E**

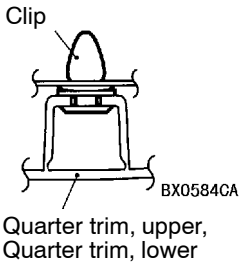


**Section F - F**

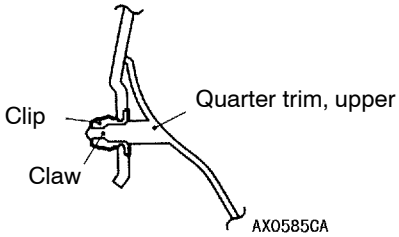


Purchased from www.WorkshopManuals.co.uk

www.WorkshopManuals.co.uk

**<Long Wheelbase>**

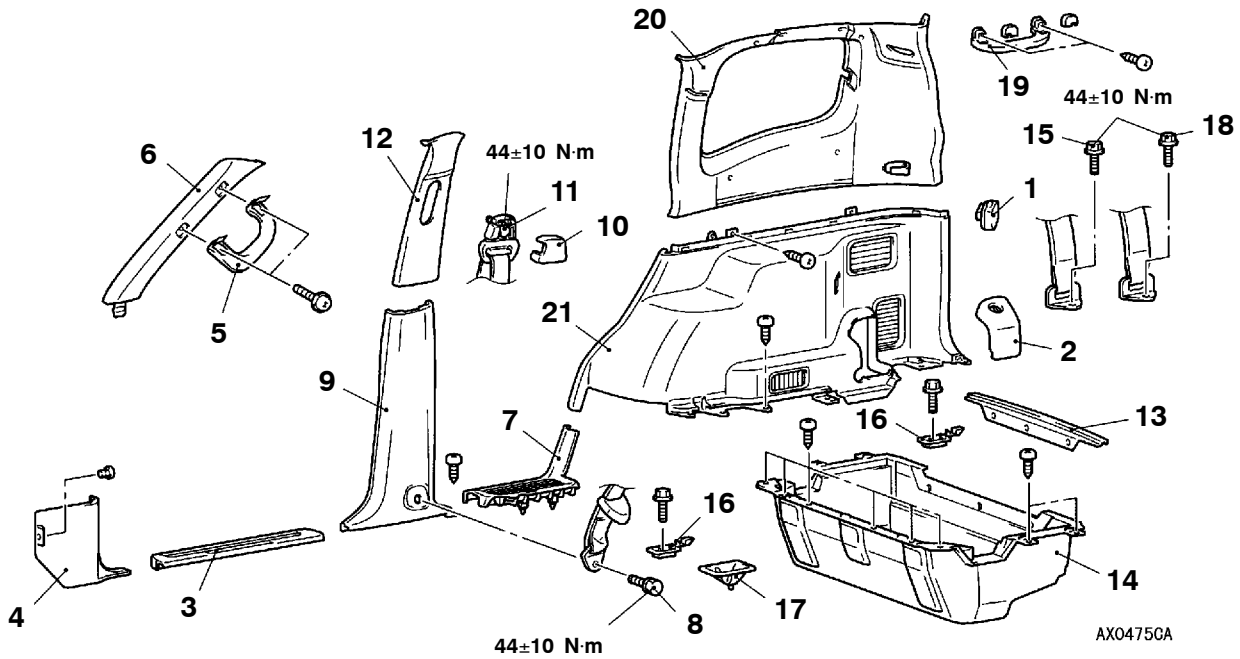


NOTE
For door trims, refer to GROUP 42.

1. AC socket
2. Quarter trim cover
- Third seat assembly
3. Front scuff plate
4. Cowl side trim
5. Assist grip
6. Front pillar trim
7. Rear scuff plate
8. Front seat belt connection
9. Center pillar trim, lower
10. Sash guide cover
11. Front seat belt connection
12. Center pillar trim, upper
13. Back door scuff plate
14. Luggage floor box
15. Second seat belt connection
16. Luggage hook
17. Striker cover
18. Third seat belt connection
19. Assist grip
20. Quarter trim, upper
21. Quarter trim, lower

Purchased from www.WorkshopManuals.co.uk

www.WorkshopManuals.co.uk

## CLIP AND CLAW POSITION

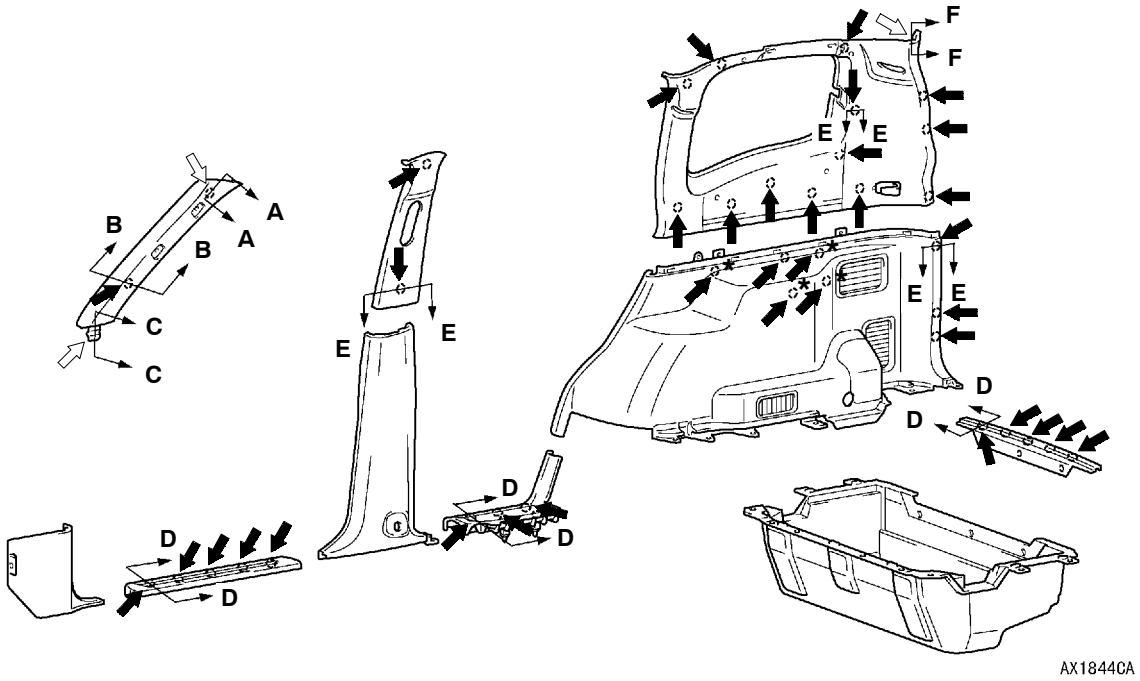


NOTE
⬅ : Clip position (* mark shows L.H. side only)
⇦ : Claw position

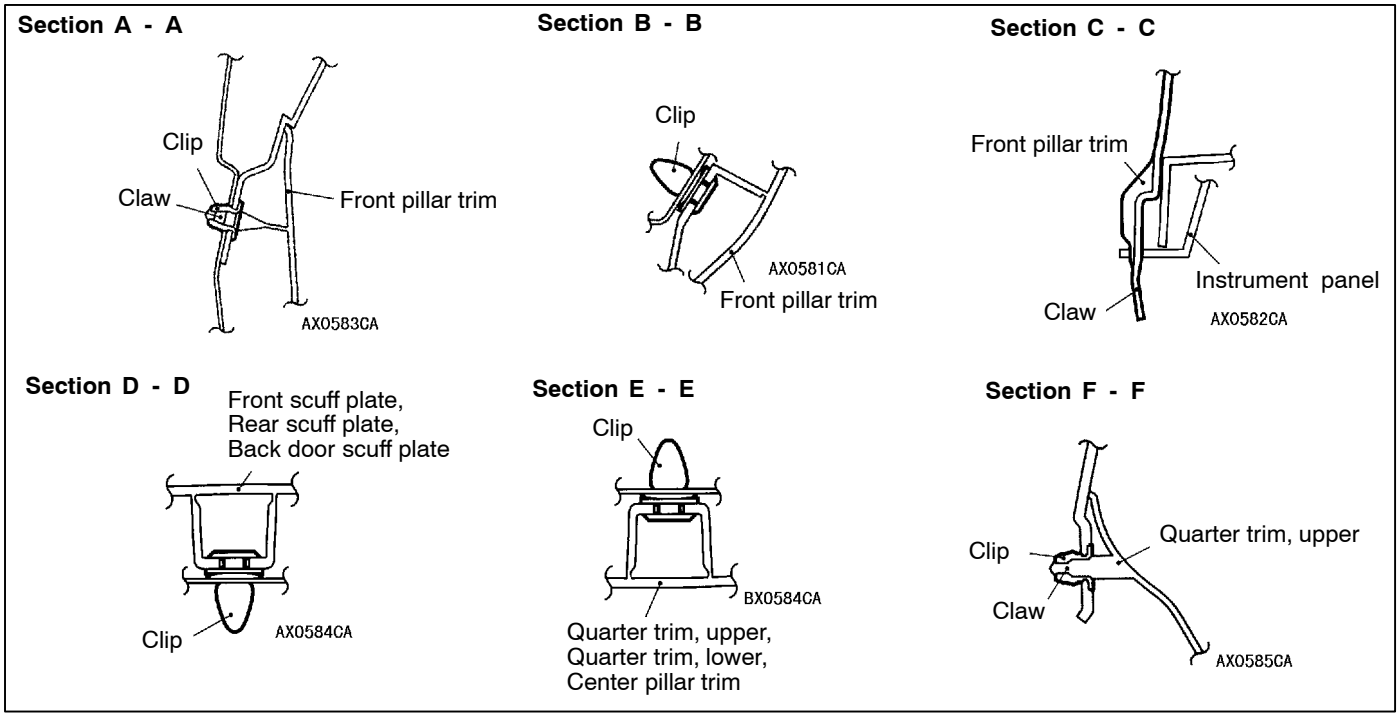


Purchased from www.WorkshopManuals.co.uk

www.WorkshopManuals.co.uk

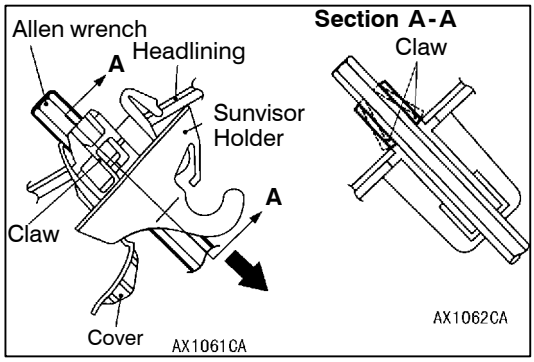


# SUNVISOR HOLDER

## REMOVAL SERVICE POINT

### SUNVISOR HOLDER REMOVAL

1. Remove the sunvisor holder cover, insert a 6 mm-Allen wrench to disengage the sunvisor holder side claws.
2. Pull out the sunvisor into the shown direction to remove the sunvisor holder.

Purchased from www.WorkshopManuals.co.uk

www.WorkshopManuals.co.uk

# FRONT SEAT

## REMOVAL AND INSTALLATION

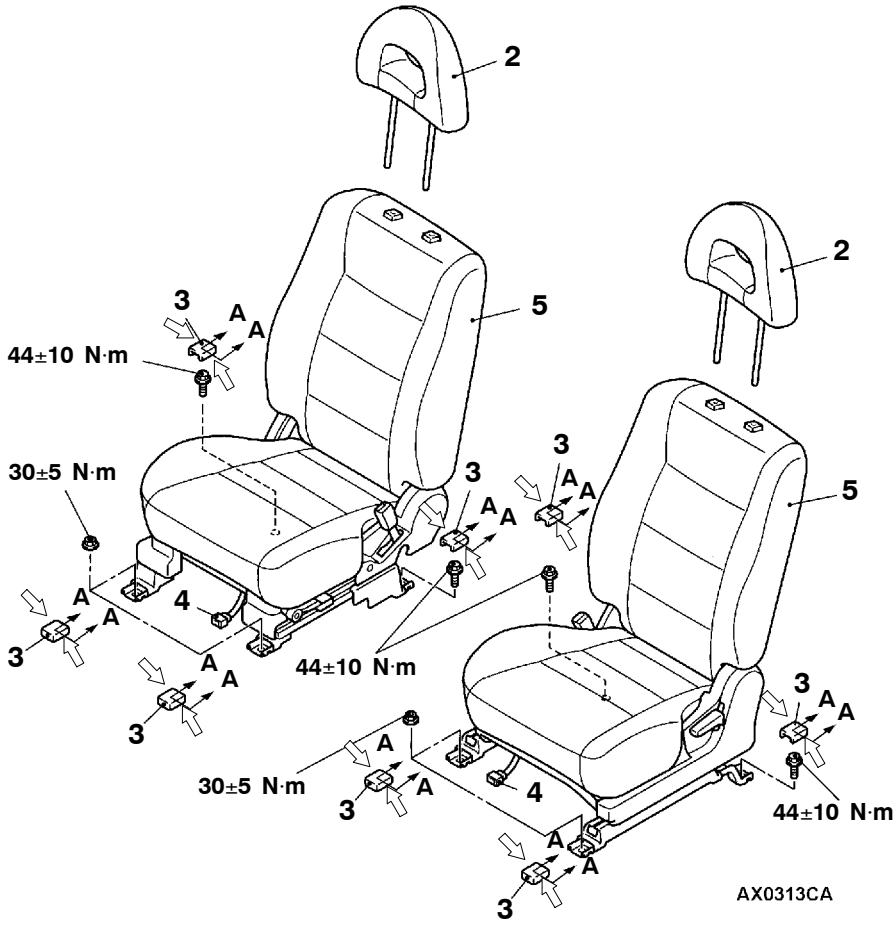


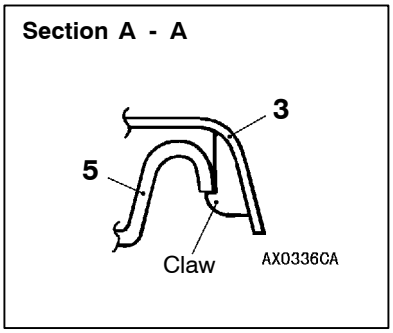


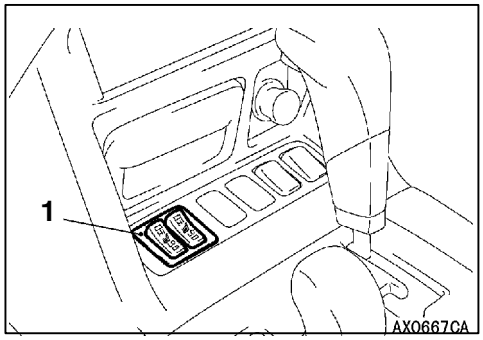


NOTE:
⇦ marks show claw positions.

1. Heated seat switch
2. Headrestraint

**Front seat assembly removal steps**

3. Front seat anchor cover
4. Harness connector
▶A◀ 5. Front seat assembly

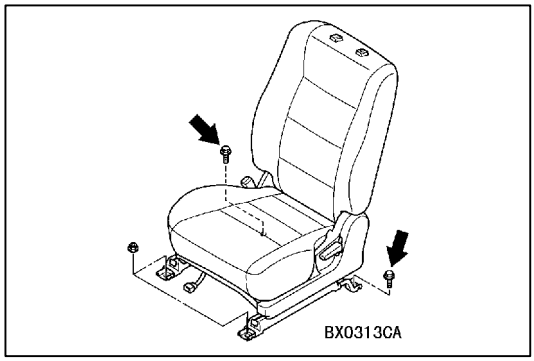


## INSTALLATION SERVICE POINT

### ▶A◀ FRONT SEAT ASSEMBLY INSTALLATION

First install all of the front seat assembly mounting nuts and bolts, and then tighten them to the specified torque. The shown bolts should be tightened with no load applied to the front seat cushion.

Purchased from www.WorkshopManuals.co.uk

www.WorkshopManuals.co.uk

## DISASSEMBLY AND REASSEMBLY

**<Power seat>**

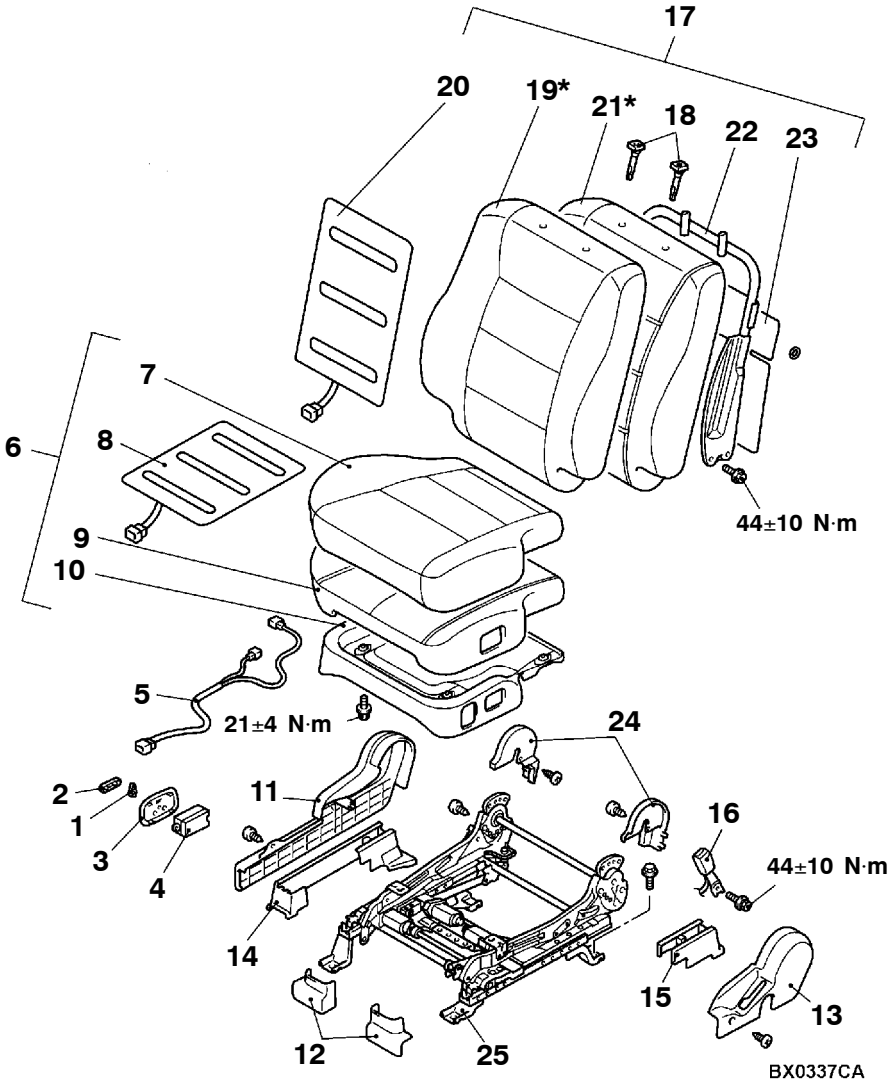


NOTE
*: For the sport seat, the seat cover and pad are non-separable.

**Disassembly steps**

1. Reclining adjuster knob
2. Slide adjuster knob
3. Power seat switch garnish
4. Power seat switch
5. Harness clamp
6. Front seat cushion assembly
7. Front seat cushion cover
8. Front seat cushion heater
9. Front seat cushion pad
10. Front seat cushion frame
11. Side shield cover
12. Front rail cover
13. Hinge cover
14. Seat slide adjuster side cover
15. Seat slide adjuster inner side cover
16. Inner seat belt
17. Front seat back assembly
18. Headrestraint guide
19. Front seatback cover
20. Front seatback heater
21. Front seatback pad
22. Front seatback frame
    <Vehicles without side air bag>
23. Front seatback board
24. Reclining adjuster lower cover
25. Seat slide adjuster

◀A▶

Purchased from www.WorkshopManuals.co.uk

www.WorkshopManuals.co.uk

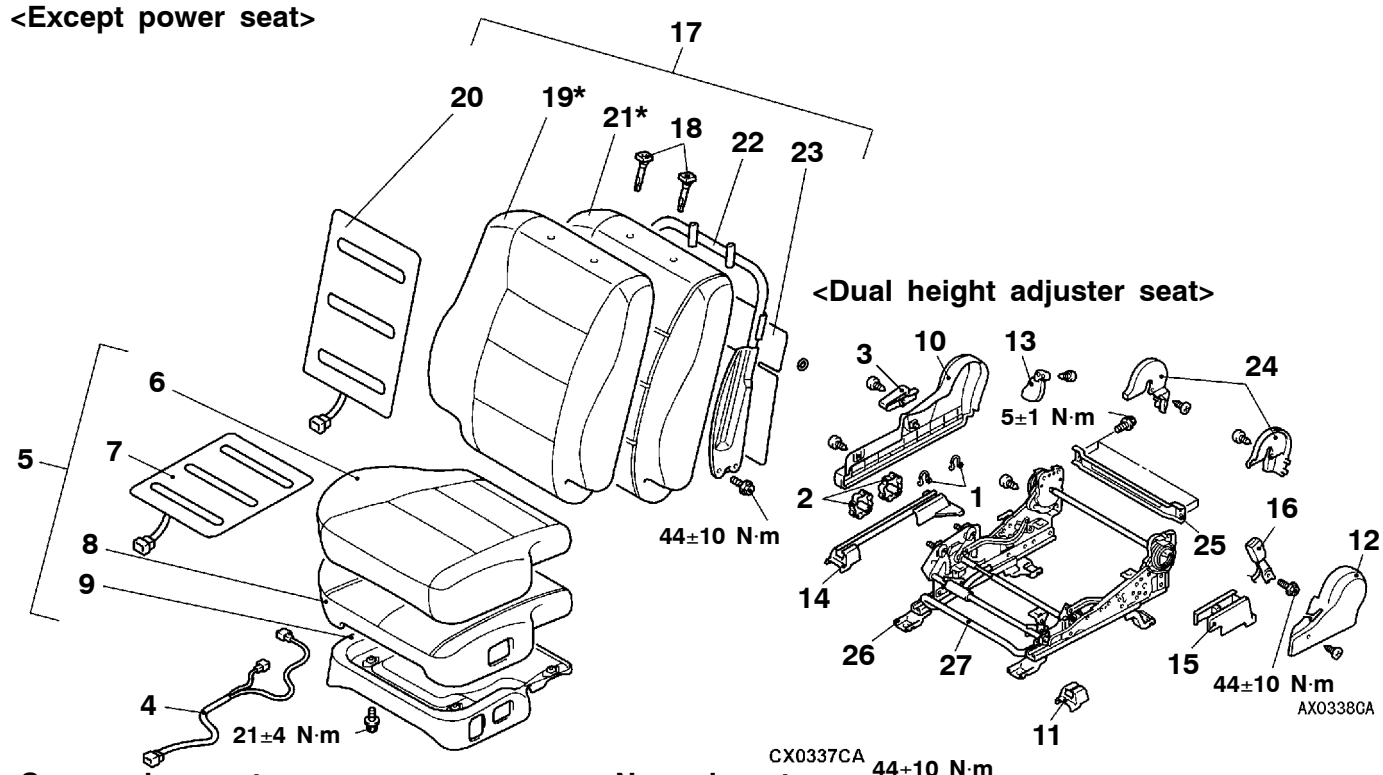


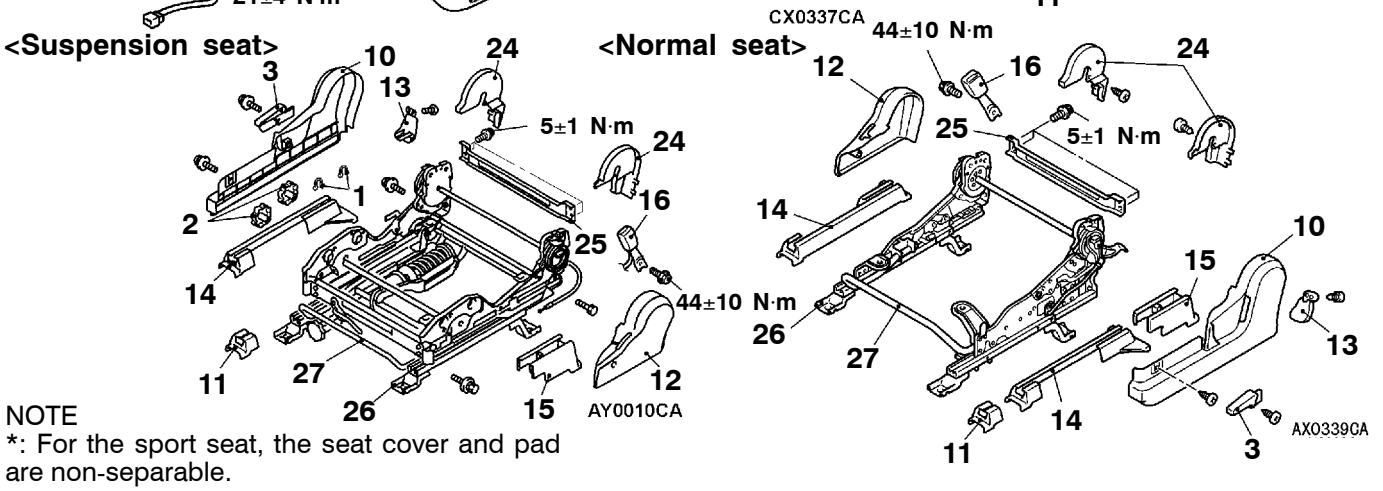


NOTE
*: For the sport seat, the seat cover and pad are non-separable.

**Disassembly steps**

1. Clip<Vehicles with Suspension seat and dual height adjuster seat>
2. Height adjuster knob<Vehicles with Suspension seat and dual height adjuster seat>
3. Reclining adjuster lever
4. Harness clamp
5. Front seat cushion assembly
6. Front seat cushion cover
7. Front seat cushion heater
8. Front seat cushion pad
9. Front seat cushion frame
10. Side shield cover
11. Front rail cover
12. Hinge cover
13. Rear rail cover

◀A▶

14. Seat slide adjuster side cover
15. Seat slide adjuster inner side cover
16. Inner seat belt
17. Front seat back assembly
18. Headrestraint guide
19. Front seatback cover
20. Front seatback heater
21. Front seatback pad
22. Front seatback frame <Vehicles without side air bag>
23. Front seat back board
24. Reclining adjuster lower cover
25. Front seat frame
26. Seat slide adjuster
27. Seat slide adjuster lever

Purchased from www.WorkshopManuals.co.uk

www.WorkshopManuals.co.uk

## CLIP AND CLAW POSITION

### <Side shield cover>

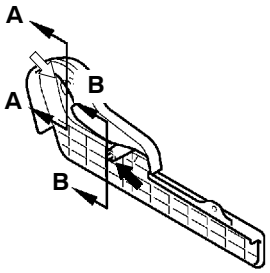

ACX01394

Section A - A

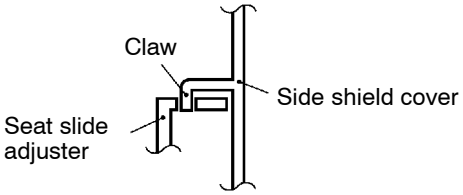

AACX01395

Section B - B

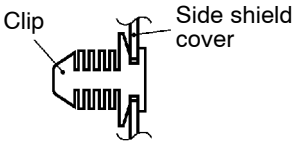

AACX01396

### <Front rail cover>

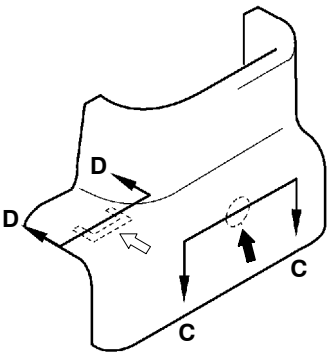

ACX01397

Section C - C

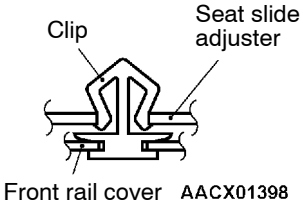

AACX01398

Section D - D

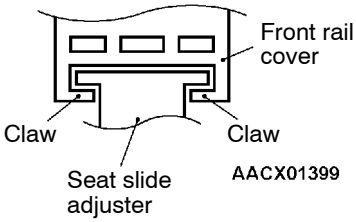

AACX01399

### <Hinge cover>

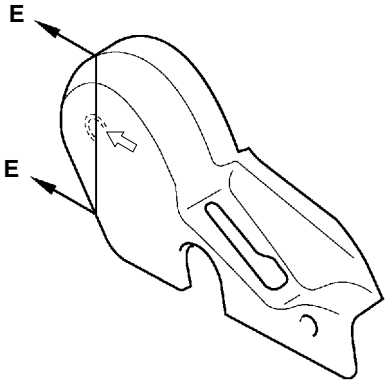

ACX01400

Section E - E

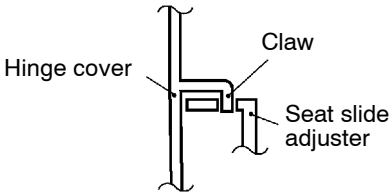

AACX01401

### <Reclining adjuster lower cover>

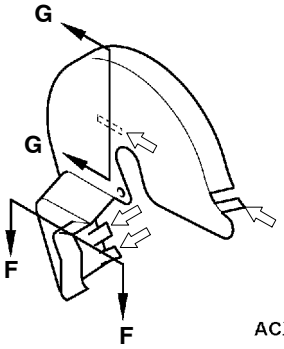

ACX01402

Section F - F

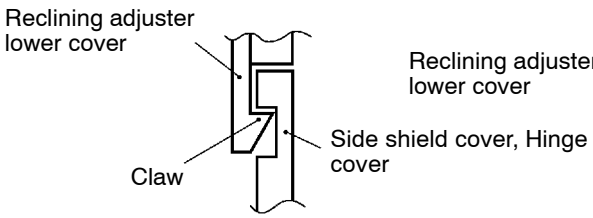

AACX01403

Section G - G

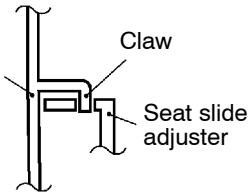

AACX01401

NOTE
⬅ : Clip position
⇦ : Claw position

Purchased from www.WorkshopManuals.co.uk

www.WorkshopManuals.co.uk

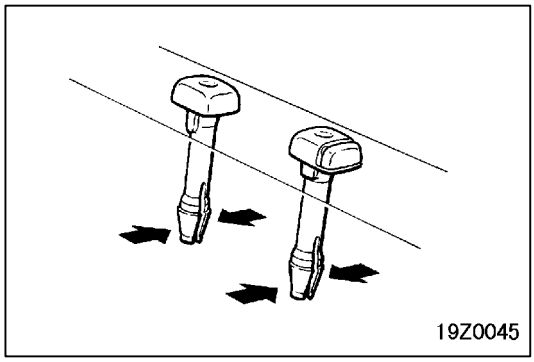


## REMOVAL SERVICE POINT

### ◀A▶ HEADRESTRAINT GUIDE REMOVAL

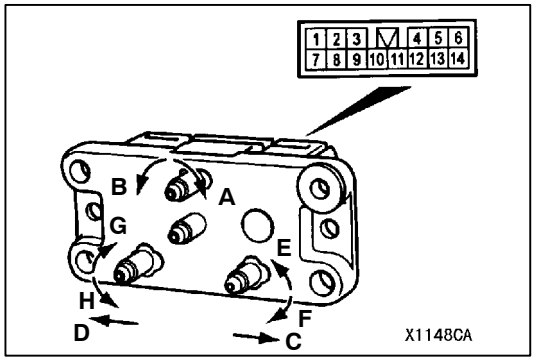


## INSPECTION

### POWER SEAT MANUAL SWITCH CONTINUITY CHECK

| Switch position | | | Terminal No. | | | | | | | | | |
|---|---|---|---|---|---|---|---|---|---|---|---|---|
| | | | 1 | 2 | 3 | 4 | 5 | 6 | 7 | 8 | 13 | 14 |
| Reclining switch | Front | A | | | ○ | ○ | | | | | ○ | ○ |
| | Rear | B | | | ○ | ○ | | | | | ○ | ○ |
| Slide switch | Front | C | | | | | | | ○ | ○ | ○ | ○ |
| | Rear | D | | | | | | | ○ | ○ | ○ | ○ |
| Front height switch | Up | E | ○ | ○ | | | | | | | ○ | ○ |
| | Down | F | ○ | ○ | | | | | | | ○ | ○ |
| Rear height switch | Up | G | | | | | ○ | ○ | | | ○ | ○ |
| | Down | H | | | | | ○ | ○ | | | ○ | ○ |

Purchased from www.WorkshopManuals.co.uk

www.WorkshopManuals.co.uk

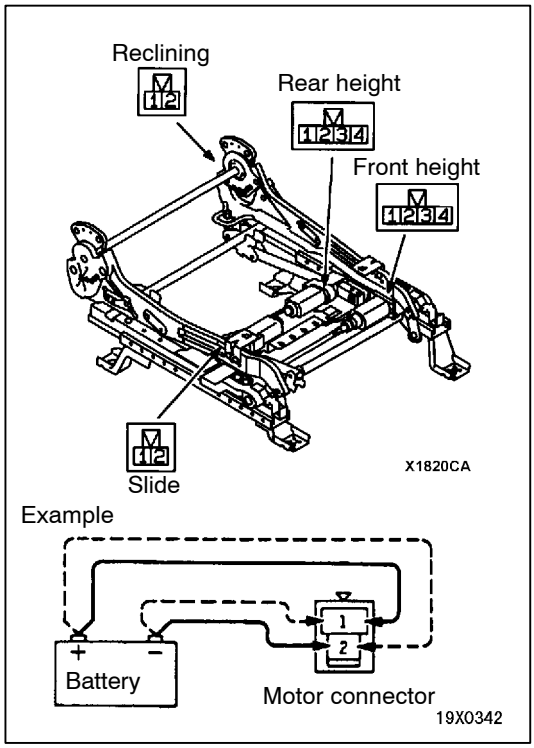


## POWER SEAT SWITCH FUNCTION CHECK

1. Disconnect the motor connectors.
2. When the battery voltage is applied to the motor terminals, each motor should run smoothly and the seat adjusting mechanism should meet the table below.

| Motor name | Function direction | Terminal No. | | | | Stop position |
|---|---|---|---|---|---|---|
| | | 1 | 2 | 3 | 4 | |
| Front height | Down | ⊕ | ⊖ | - | - | Should stop at predetermined limit position. |
| | Up | ⊖ | ⊕ | - | - | |
| Rear height | Down | - | - | ⊕ | ⊖ | |
| | Up | - | - | ⊖ | ⊕ | |
| Slide | Rear | ⊕ | ⊖ | - | - | |
| | Front | ⊖ | ⊕ | - | - | |
| Reclining | Rear | ⊖ | ⊕ | - | - | |
| | Front | ⊕ | ⊖ | - | - | |

3. If defective, check the power seat adjuster assembly.

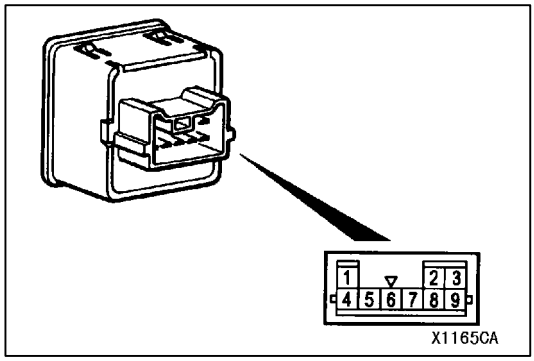


## HEATED SEAT SWITCH CONTINUITY CHECK

| | Switch position | 1 | 3 | 4 | 5 | IND | 8 | 9 | 2 | 6 |
|---|---|---|---|---|---|---|---|---|---|---|
| Driver's side | HI | | | | | | | | | |
| | OFF | | | | | | | | | |
| | LO | | | | | | | | | |
| Passenger's side | HI | | | | | | | | | |
| | OFF | | | | | | | | | |
| | LO | | | | | | | | | |

ILL

Purchased from www.WorkshopManuals.co.uk

www.WorkshopManuals.co.uk

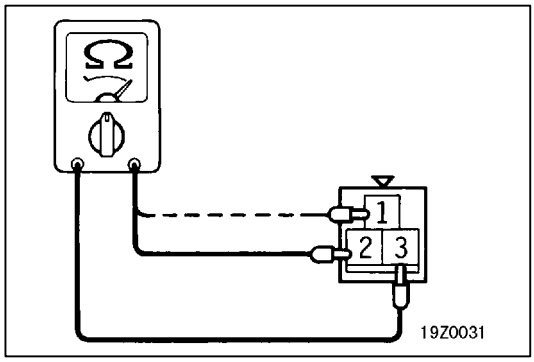


**SEAT CUSHION HEATER CHECK**

Measure the resistance between terminals.

**Standard value (at cabin temperature of 20°C):**

| Terminal No. | Sport seat | Except sport seat |
|---|---|---|
| Between terminals 1–3 | 6.0Ω±10% | 5.0Ω±10% |
| Between terminals 2–3 | 6.4Ω±10% | 5.4Ω±10% |

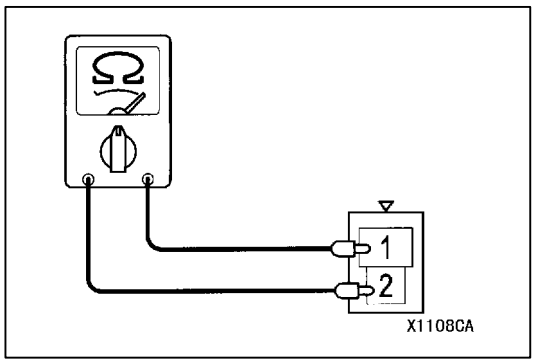


**SEATBACK HEATER CHECK**

Measure the resistance between terminals.

**Standard value (at cabin temperature of 20°C):**

| Terminal No. | Sport seat | Except sport seat |
|---|---|---|
| Between terminals 1–2 | 6.0Ω±10% | 6.0Ω±10% |

Purchased from www.WorkshopManuals.co.uk

www.WorkshopManuals.co.uk

# REAR/SECOND SEAT

## REMOVAL AND INSTALLATION

<Short wheelbase>

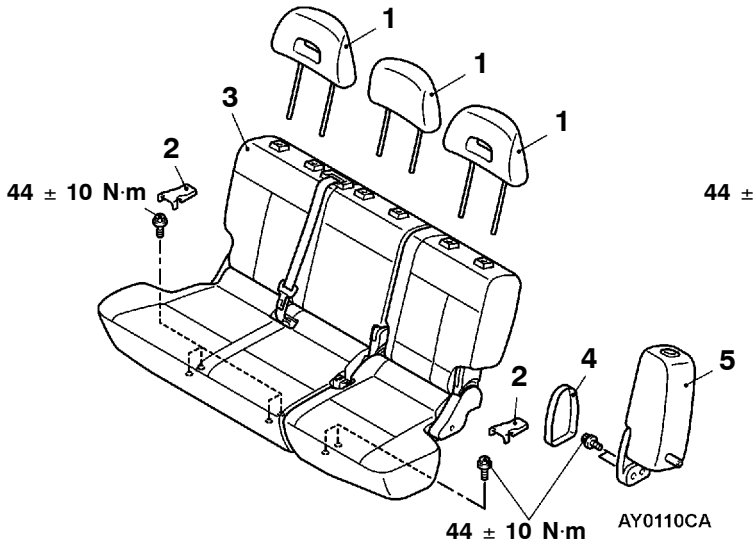


<Long wheelbase>

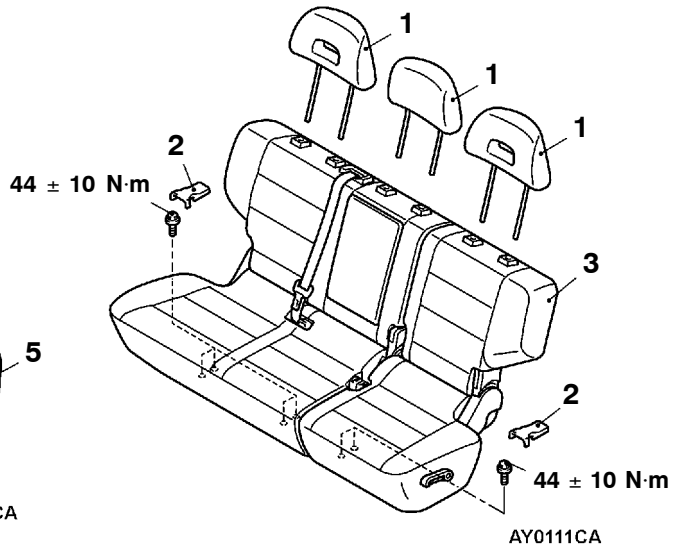


1. Headrestraint

**Rear/second seat assembly removal steps**

2. Seat anchor cover
3. Rear/second seat assembly

**Seat side back assembly removal steps**

4. Seat hinge cover
5. Seat side back assembly

Purchased from www.WorkshopManuals.co.uk

www.WorkshopManuals.co.uk

## CLAW POSITION

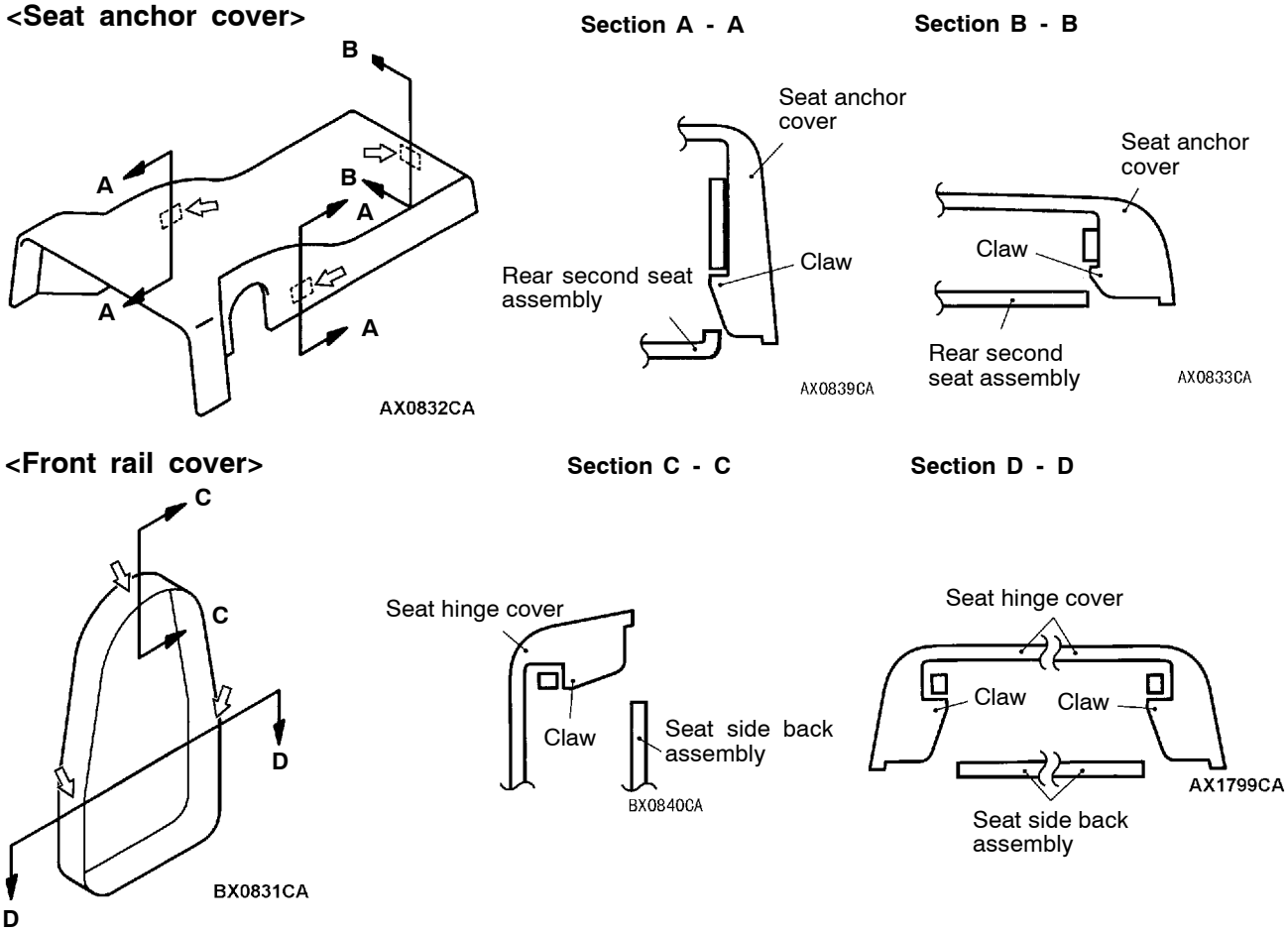


NOTE
⇦ : Claw position

Purchased from www.WorkshopManuals.co.uk

www.WorkshopManuals.co.uk

## DISASSEMBLY AND REASSEMBLY

<Short wheelbase L.H. side>

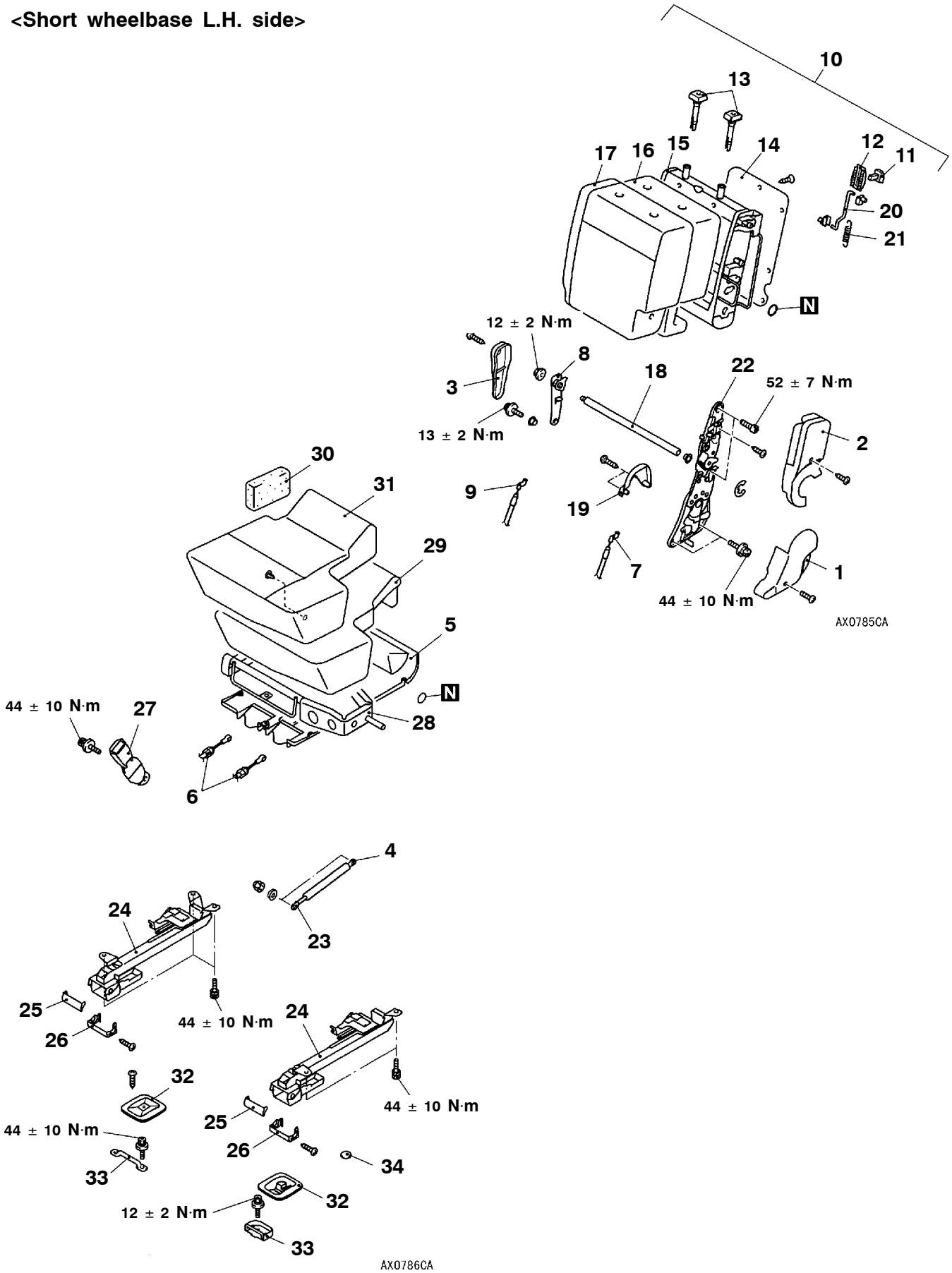


Purchased from www.WorkshopManuals.co.uk

www.WorkshopManuals.co.uk

**Disassembly steps**

1. Lower reclining adjuster cover
2. Center reclining adjuster cover
3. Free hinge cover
4. Gas damper connection
5. Rear seat cushion under cover
6. Catch cable A, B connection
7. Catch cable A
8. Hinge bracket
9. Catch cable B
10. Rear seat back assembly
11. Folding lever knob
12. Folding knob garnish
13. ◀A▶ Headrestraint guide
14. Rear seat back board
15. Rear seat back frame
16. Rear seat back pad
17. Rear seat back cover
18. Shaft
19. Reclining adjuster back cover
20. Rod
21. Spring
22. Reclining adjuster
23. Gas damper
24. Rear seat catch assembly
25. Upper foot cover
26. Lower foot cover
27. Inner seat belt
28. Rear seat cushion frame
29. Rear seat cushion pad
30. Support pad
31. Rear seat cushion cover
32. Striker cover
33. Striker
34. Plug

Purchased from www.WorkshopManuals.co.uk

www.WorkshopManuals.co.uk

<Short wheelbase R.H. side>

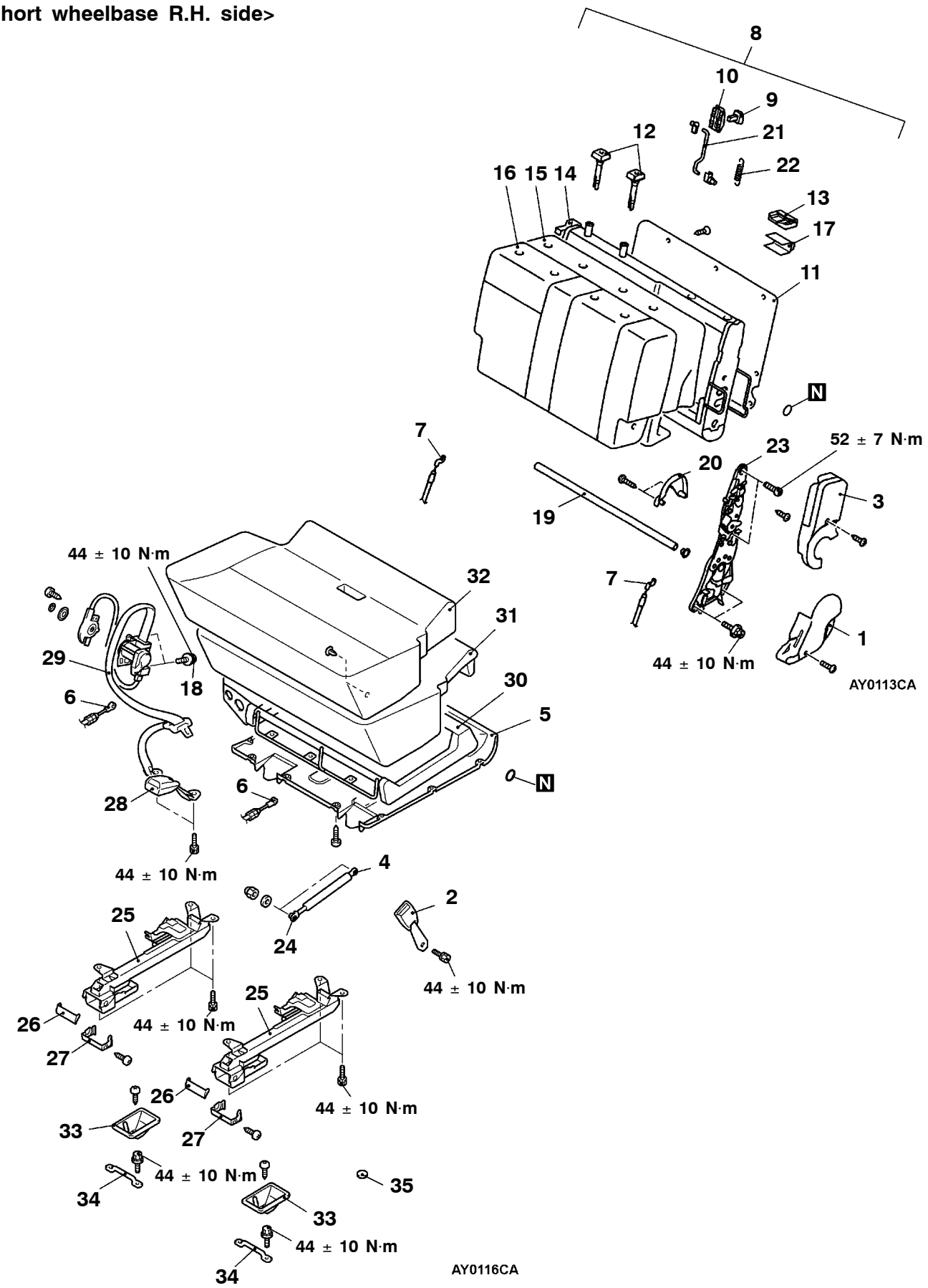


Purchased from www.WorkshopManuals.co.uk

www.WorkshopManuals.co.uk

**Disassembly steps**

1. Lower reclining adjuster cover
2. Inner seat belt
3. Center reclining adjuster cover
4. Gas damper connection
5. Rear seat cushion under cover
6. Catch cable A connection
7. Catch cable A
8. Rear seat back assembly
9. Folding lever knob
10. Folding knob garnish
11. Rear seat back board
12. ◀A▶ Headrestraint guide
13. Sash anchor garnish
14. Rear seat back frame
15. Rear seat back pad
16. Rear seat back cover
17. Seat belt protector
18. Center seat belt connection
19. Shaft
20. Reclining adjuster back cover
21. Rod
22. Spring
23. Reclining adjuster
24. Gas damper
25. Rear seat catch assembly
26. Upper foot cover
27. Lower foot cover
28. Inner seat belt
29. Center seat belt
30. Rear seat cushion frame
31. Rear seat cushion pad
32. Rear seat cushion cover
33. Striker cover
34. Striker
35. Plug

**<Short wheelbase-Rear seat side back assembly>**

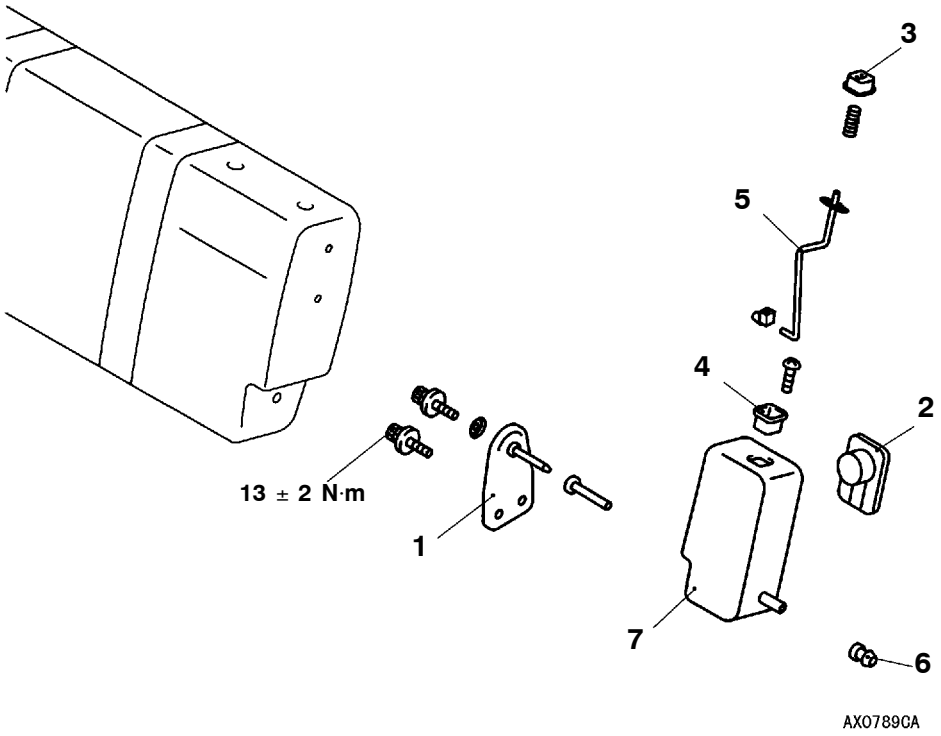


**Disassembly steps**

1. Hinge bracket
2. Cup holder
3. Knob
4. Knob guide
5. Rod
6. Bushing
7. Rear seat side back

Purchased from www.WorkshopManuals.co.uk

www.WorkshopManuals.co.uk

<Long wheelbase L.H. side>

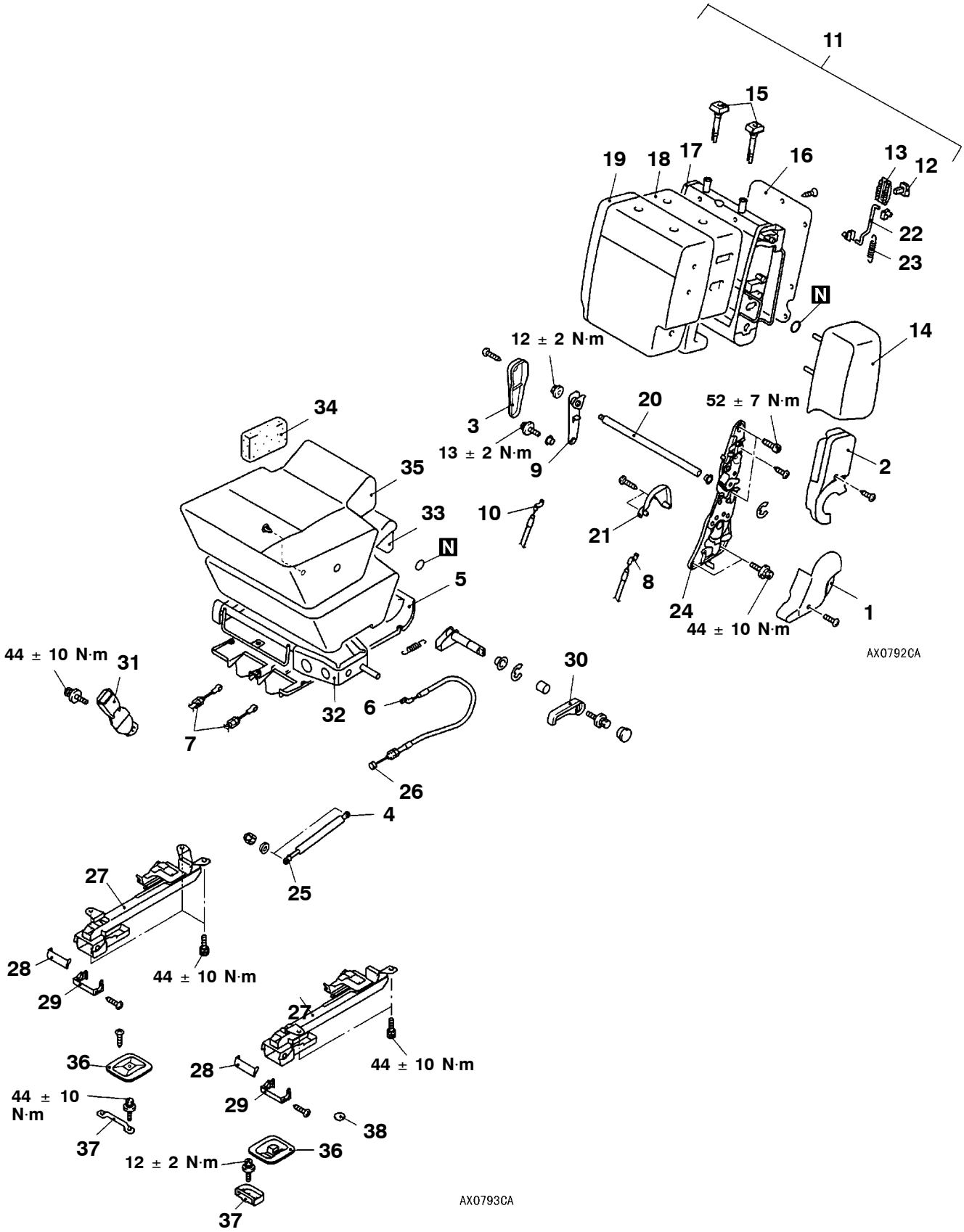


Purchased from www.WorkshopManuals.co.uk

www.WorkshopManuals.co.uk

**Disassembly steps**

1. Lower reclining adjuster cover
2. Center reclining adjuster cover
3. Free hinge cover
4. Gas damper connection
5. Rear seat cushion under cover
6. Reclining cable connection
7. Catch cable A, B connection
8. Catch cable A
9. Hinge bracket
10. Catch cable B
11. Second seat back assembly
12. Folding lever knob
13. Folding knob garnish
14. Second seat side back assembly
15. ◀A▶ Headrestraint guide
16. Second seat back board
17. Second seat back frame
18. Second seat back pad
19. Second seat back cover
20. Shaft
21. Reclining adjuster back cover
22. Rod
23. Spring
24. Reclining adjuster
25. Gas damper
26. Reclining cable
27. Second seat catch assembly
28. Upper foot cover
29. Lower foot cover
30. Reclining knob
31. Inner seat belt
32. Second seat cushion frame
33. Second seat cushion pad
34. Support pad
35. Second seat cushion cover
36. Striker cover
37. Striker
38. Plug

Purchased from www.WorkshopManuals.co.uk

www.WorkshopManuals.co.uk

<Long wheelbase R.H. side>

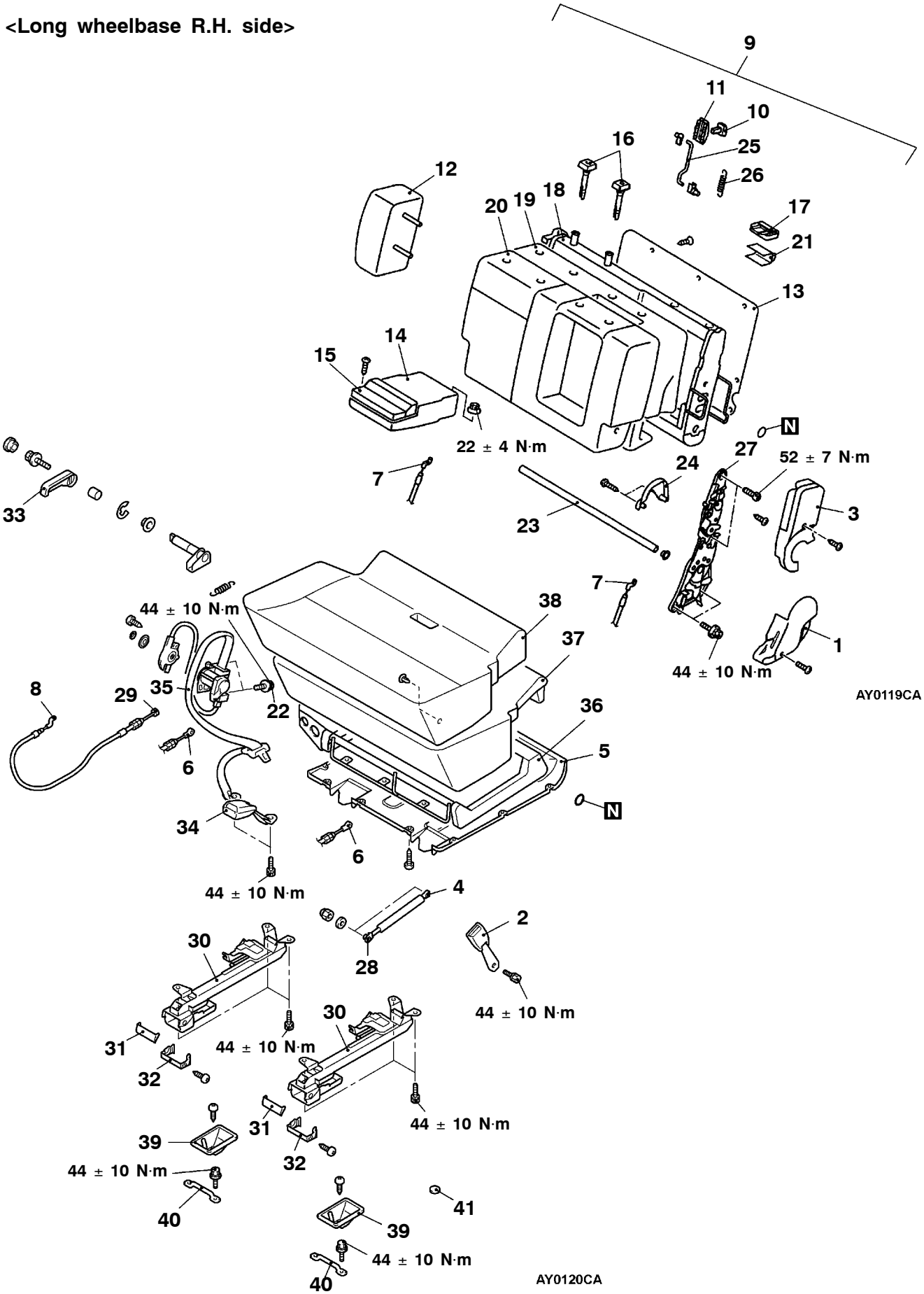


Purchased from www.WorkshopManuals.co.uk

www.WorkshopManuals.co.uk

**Disassembly steps**

1. Lower reclining adjuster cover
2. Inner seat belt
3. Center reclining adjuster cover
4. Gas damper connection
5. Rear seat cushion under cover
6. Catch cable A connection
7. Catch cable A
8. Reclining cable connection
9. Second seat back assembly
10. Folding lever knob
11. Folding knob garnish
12. Second seat side back assembly
13. Second seat back board
14. Armrest
15. Cup holder
16. ◀A▶ Headrestraint guide
17. Sash anchor garnish
18. Second seat back frame
19. Second seat back pad
20. Second seat back cover
21. Seat belt protector
22. Center seat belt connection
23. Shaft
24. Reclining adjuster back cover
25. Rod
26. Spring
27. Reclining adjuster
28. Gas damper
29. Reclining cable
30. Second seat catch assembly
31. Upper foot cover
32. Lower foot cover
33. Reclining knob
34. Inner seat belt
35. Center seat belt
36. Second seat cushion frame
37. Second seat cushion pad
38. Second seat cushion cover
39. Striker cover
40. Striker
41. Plug

## CLAW POSITION

### <Lower reclining adjuster cover>

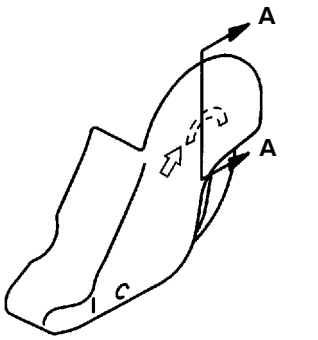

AX0800CA

**Section A - A**

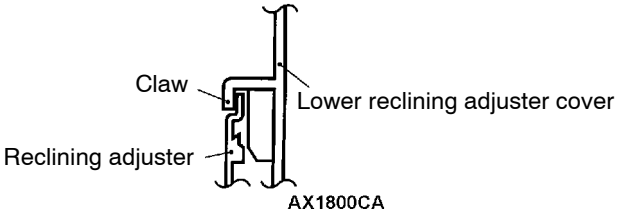


### <Folding knob garnish>

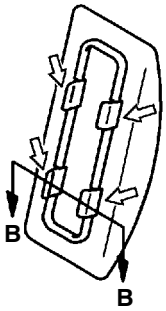

AX0830CA

**Section B - B**

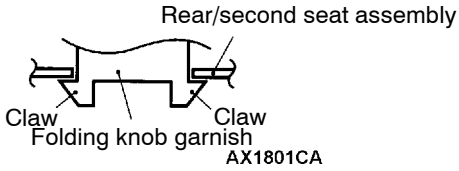


NOTE
⇦ : Claw position

Purchased from www.WorkshopManuals.co.uk

www.WorkshopManuals.co.uk

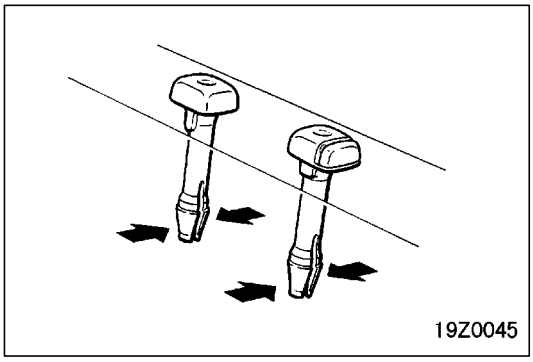


## REMOVAL SERVICE POINT

◀A▶ HEADRESTRAINT GUIDE REMOVAL

# THIRD SEAT

## DISASSEMBLY AND REASSEMBLY

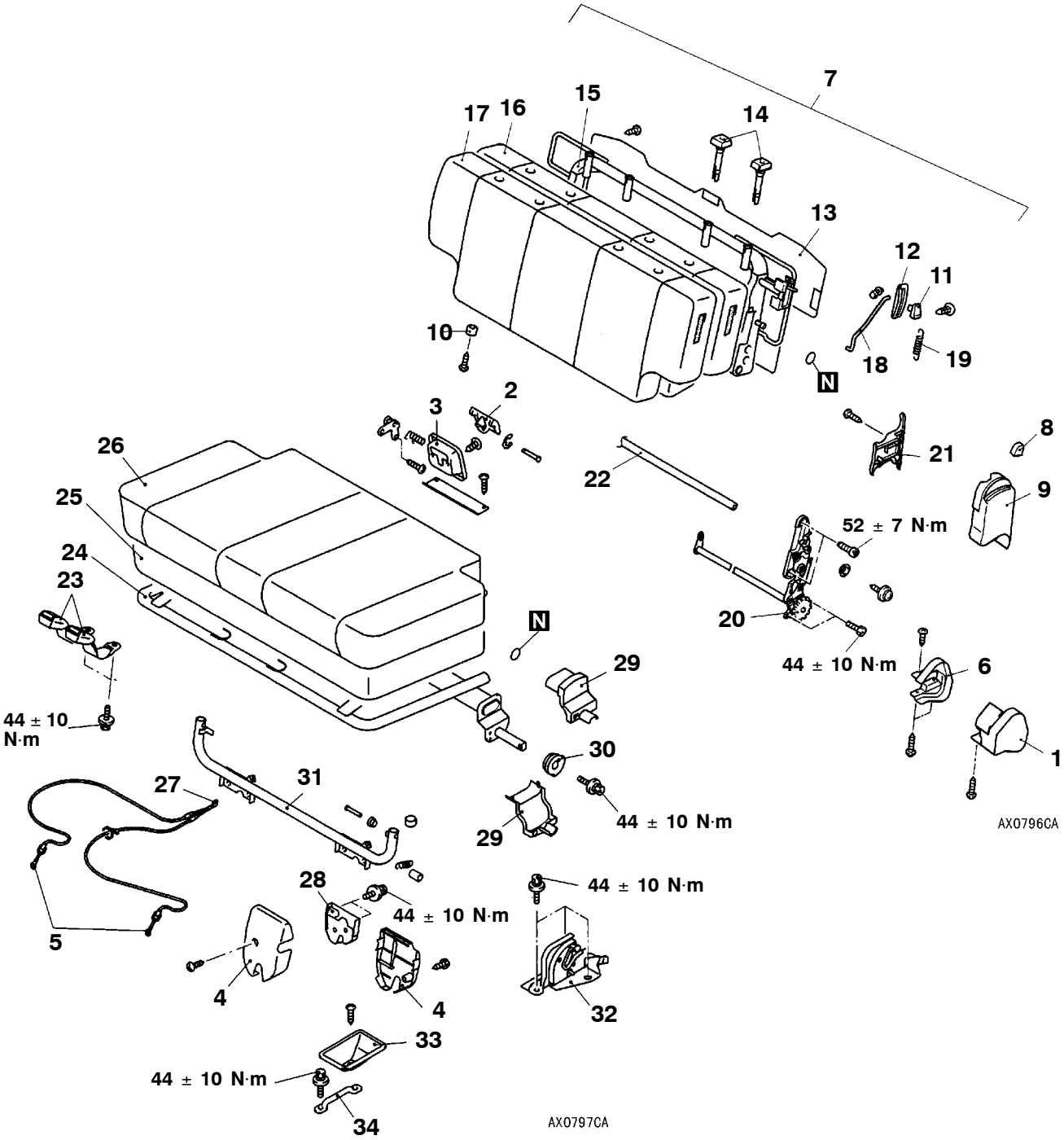


Purchased from www.WorkshopManuals.co.uk

www.WorkshopManuals.co.uk

**Disassembly steps**

1. Outer reclining adjuster cover
2. Catch release knob
3. Catch release knob garnish
4. Latch cover
5. Catch cable connection
6. Inner reclining adjuster cover
7. Third seat back assembly
8. Reclining knob
9. Reclining adjuster cover
10. Damper
11. Folding lever knob
12. Folding knob garnish
13. Third seat back board
14. ◀A▶ Headrestraint guide
15. Third seat back frame
16. Third seat back pad
17. Third seat back cover
18. Rod
19. Spring
20. Reclining adjuster
21. Inner reclining adjuster cover
22. Shaft
23. Inner seat belt
24. Third seat cushion frame
25. Third seat cushion pad
26. Third seat cushion cover
27. Catch cable
28. Third seat latch
29. Arm cover
30. Cam
31. Third seat leg frame assembly
32. Catch assembly
33. Striker cover
34. Striker

Purchased from www.WorkshopManuals.co.uk

www.WorkshopManuals.co.uk

## CLAW POSITION

### <Outer reclining adjuster cover>

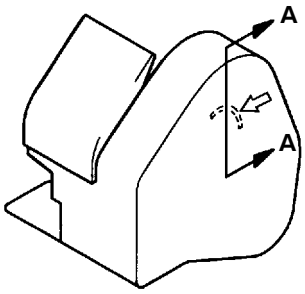


AX0805CA

### Section A - A

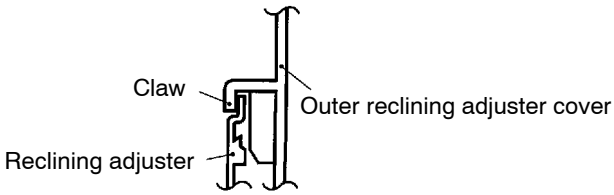


AX1264CA

### <Reclining adjuster cover>

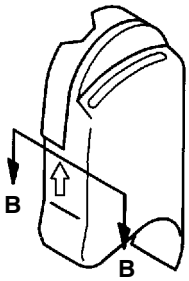


AX0806CA

### Section B - B

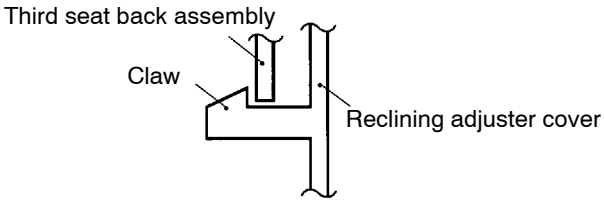


AX0834CA

### <Folding knob garnish>

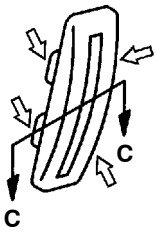


AX0829CA

### Section C - C

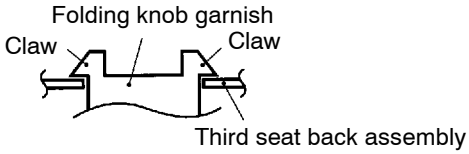


AX0835CA

### <Arm cover>

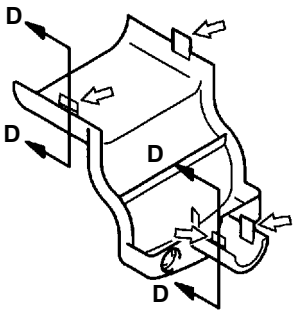


AX0807CA

### Section D - D

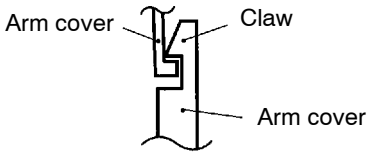


AX0836CA

NOTE
⇦ : Claw position

Purchased from www.WorkshopManuals.co.uk

www.WorkshopManuals.co.uk

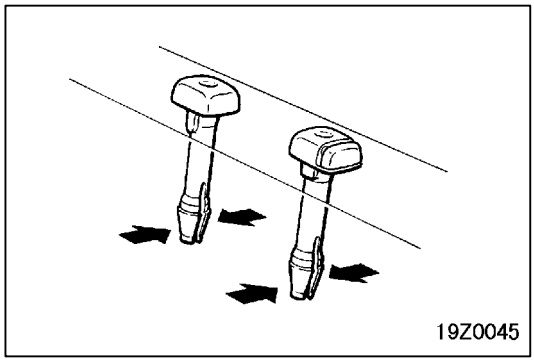


## DISASSEMBLY SERVICE POINT

### ◀A▶ HEADRESTRAINT GUIDE REMOVAL

# FRONT SEAT BELT

## REMOVAL AND INSTALLATION

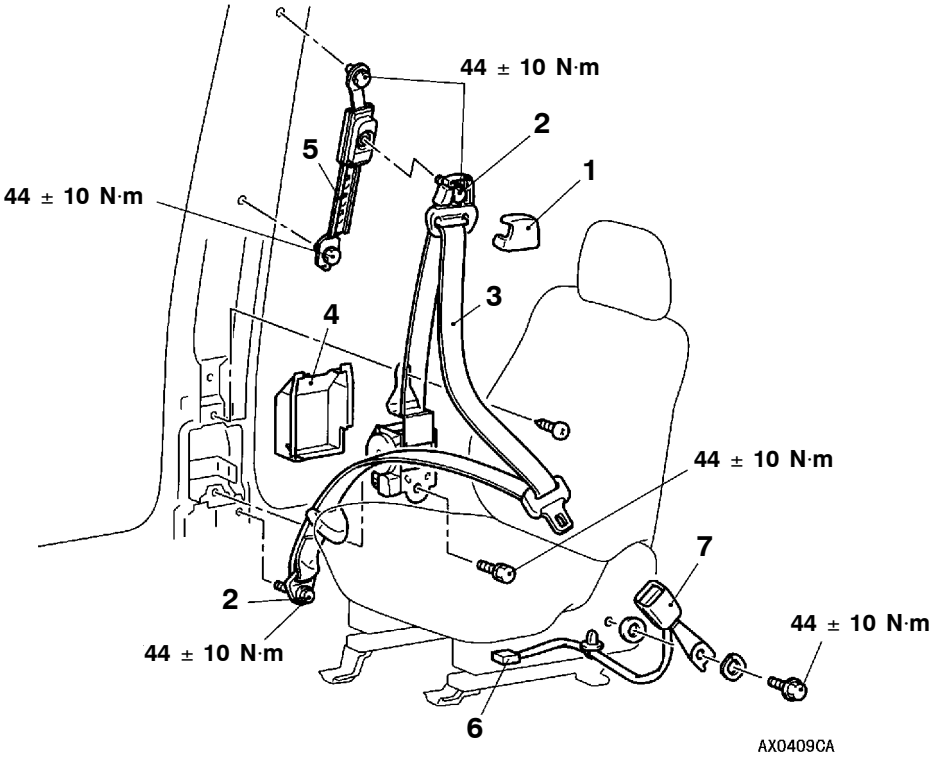


**Outer seat belt removal steps**

1. Sash guide cover
2. Outer seat belt connection
   - Lower quarter trim <Short wheelbase> (Refer to P.52A-13.)
   - Center pillar trim <Long wheelbase> (Refer to P.52A-15.)
3. Outer seat belt
4. Front noise protector
5. Shoulder anchor adjuster

**Inner seat belt removal steps**

- Front seat assembly (Refer to P.52A-18.)

6. Seat belt switch harness connector
7. Inner seat belt

Purchased from www.WorkshopManuals.co.uk

www.WorkshopManuals.co.uk

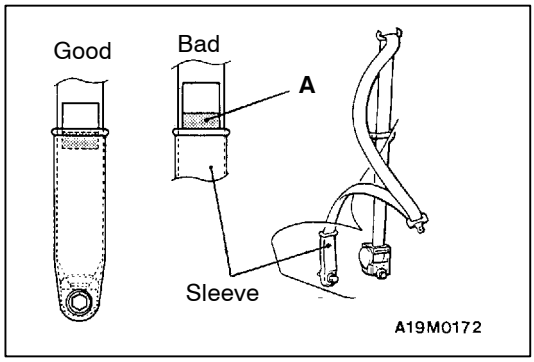


## INSPECTION

### OUTER SEAT BELT CHECK

Check that the A section (red) of the label attached to the outer seat belt is not exposed from the outer seat belt sleeve. If it is exposed, release the outer seat belt.

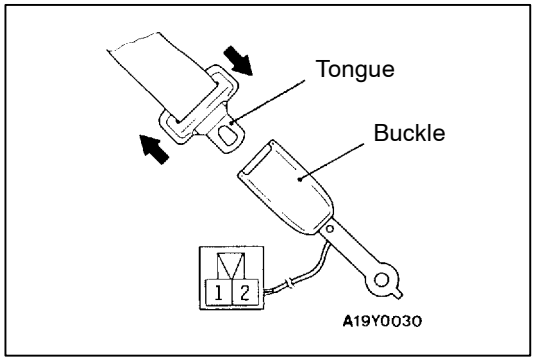


### SEAT BELT BUCKLE CONTINUITY CHECK

| Items | Terminal No. | |
|---|---|---|
| | 1 | 2 |
| Fastened seat belt | | |
| Unfastened seat belt | ○——— | ———○ |

Purchased from www.WorkshopManuals.co.uk

www.WorkshopManuals.co.uk

# REAR SEAT BELT<SHORT WHEELBASE>

## REMOVAL AND INSTALLATION

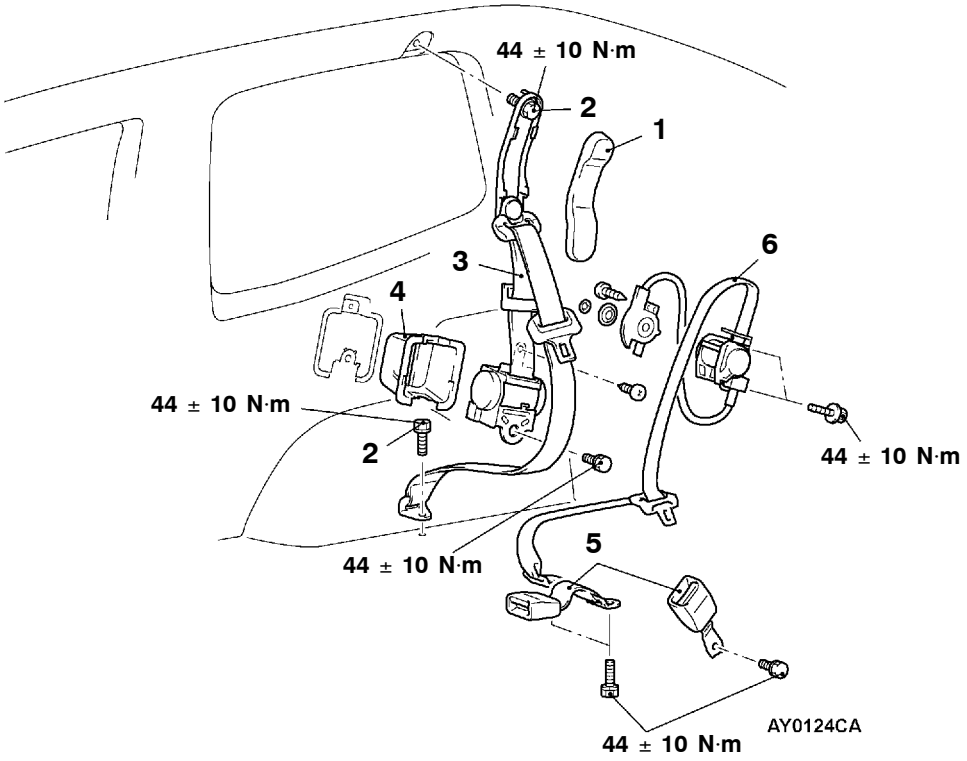


**Outer seat belt removal steps**

- Rear seat assembly
  (Refer to P.52A-25.)
- Upper quarter trim
  (Refer to P.52A-13.)

1. Sash guide cover
2. Outer seat belt connection
3. Outer seat belt
4. ELR cover

**Inner seat belt and center seat belt removal steps**

- Rear seat assembly
  (Refer to P.52A-25.)

5. Inner seat belt
   (Refer to P.52A-27,29.)
6. Center seat belt
   (Refer to P.52A-29.)

Purchased from www.WorkshopManuals.co.uk

www.WorkshopManuals.co.uk

# SECOND/THIRD SEAT BELT<LONG WHEELBASE>

## REMOVAL AND INSTALLATION

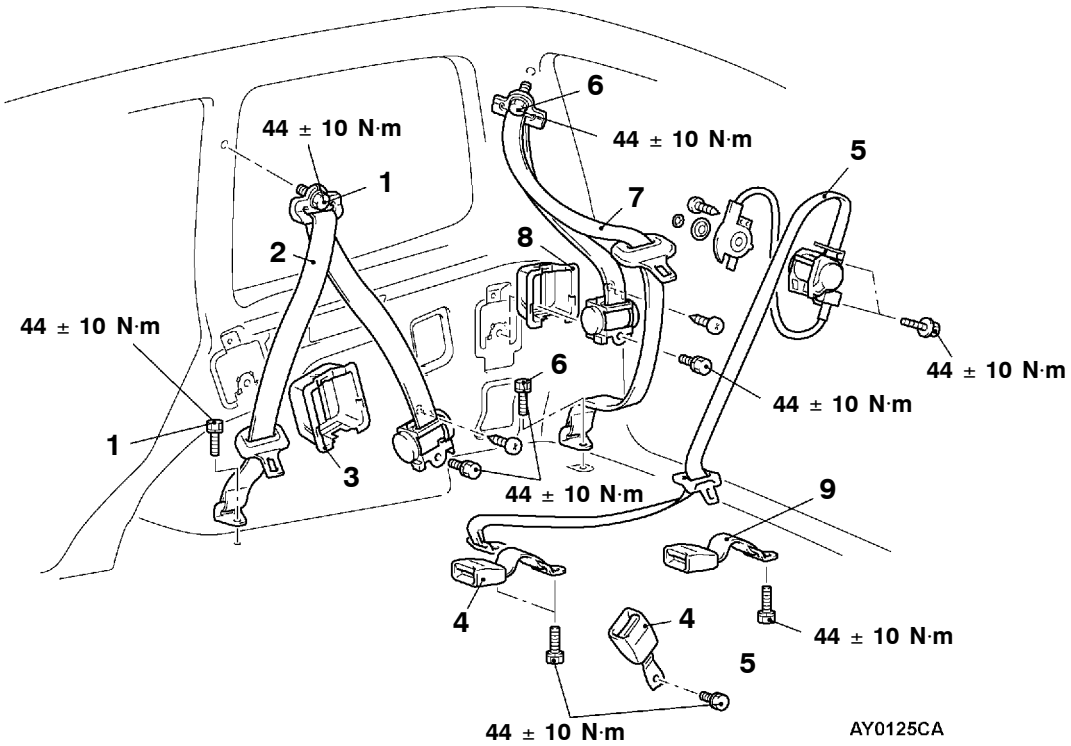


**Second seat belt removal steps**

- Lower quarter trim
  (Refer to P.52A-15.)

1. Outer seat belt connection
2. Outer seat belt
3. ELR cover
4. Inner seat belt
   (Refer to P.52A-31,33.)
5. Center seat belt
   (Refer to P.52A-33.)

**Inner seat belt removal steps**

- Lower quarter trim
  (Refer to P.52A-15.)
- Pillar duct (R.H.)
  (Refer to GROUP 55A)
- Rear blower assembly (R.H.)
  (Refer to GROUP 55A)
- TV tuner (L.H.)(Refer to GROUP 54)

6. Outer seat belt connection
7. Outer seat belt
8. ELR cover
9. Inner seat belt
   (Refer to P.52A-35.)

Purchased from www.WorkshopManuals.co.uk

www.WorkshopManuals.co.uk

**NOTES**

Purchased from www.WorkshopManuals.co.uk

www.WorkshopManuals.co.uk

# GROUP 52A
# INTERIOR

## GENERAL

### OUTLINE OF CHANGE

- Some models are equipped with a shelf holder assembly. Its service procedure is as follows:

## TRIMS

### REMOVAL AND INSTALLATION

**<Long Wheelbase>**

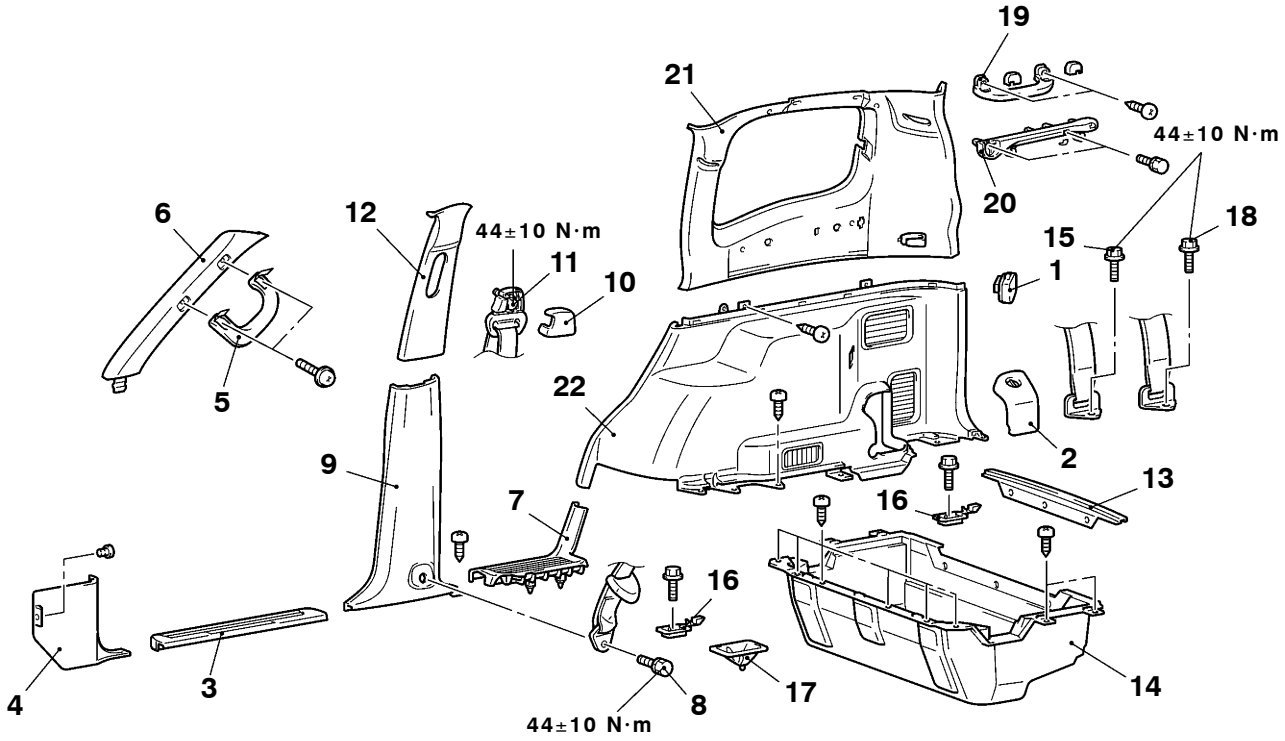


AAC006066

NOTE
For door trims, refer to GROUP 42.

1. AC socket
2. Quarter trim cover
- Third seat assembly
3. Front scuff plate
4. Cowl side trim
5. Assist grip
6. Front pillar trim
7. Rear scuff plate
8. Front seat belt connection
9. Center pillar trim, lower
10. Sash guide cover
11. Front seat belt connection
12. Center pillar trim, upper
13. Back door scuff plate
14. Luggage floor box
15. Second seat belt connection
16. Luggage hook
17. Striker cover
18. Third seat belt connection
19. Assist grip
20. Shelf holder assembly
21. Quarter trim, upper
22. Quarter trim, lower

Purchased from www.WorkshopManuals.co.uk

www.WorkshopManuals.co.uk

**NOTES**

Purchased from www.WorkshopManuals.co.uk

www.WorkshopManuals.co.uk

# SUPPLEMENTAL RESTRAINT SYSTEM (SRS)

**Click on the applicable bookmark to selected the required model year.**

Purchased from www.WorkshopManuals.co.uk

www.WorkshopManuals.co.uk


# SUPPLEMENTAL RESTRAINT SYSTEM (SRS)

## CONTENTS


GENERAL INFORMATION . . . . . 2

SRS SERVICE PRECAUTIONS . . . . . 3

SPECIAL TOOLS . . . . . 5

TEST EQUIPMENT . . . . . 6

TROUBLESHOOTING . . . . . 7

SRS MAINTENANCE . . . . . 19

POST-COLLISION DIAGNOSIS . . . . . 23

INDIVIDUAL COMPONENT SERVICE . . . . . 26

WARNING/CAUTION LABELS . . . . . 27

FRONT IMPACT SENSORS . . . . . 28

SRS AIR BAG CONTROL UNIT (SRS-ECU) . . . . . 30

AIR BAG MODULES AND CLOCK SPRING . . . . . 32

SIDE IMPACT SENSOR . . . . . 41

AIR BAG MODULE DISPOSAL PROCEDURES . . . . . 43

- Undeployed Air Bag Module Disposal . . . . . 43
- Deployed Air Bag Module Disposal Procedures . . . . . 52


**CAUTION**

- **Carefully read and observe the information in the SERVICE PRECAUTIONS (P.52B-3.) prior to any service.**
- **For information concerning troubleshooting or maintenance, always observe the procedures in the Troubleshooting (P.52B-7.) section.**
- **If any SRS components are removed or replaced in connection with any service procedures, be sure to follow the procedures in the INDIVIDUAL COMPONENT SERVICE section (P.52B-26.) for the components involved.**
- **If you have any questions about the SRS, please contact your local distributor.**

Purchased from www.WorkshopManuals.co.uk

www.WorkshopManuals.co.uk

# GENERAL INFORMATION

To improve safety, the SRS are available as optional parts. These systems enhance collision safety by restraining the front passengers in case of an accident.
The SRS consists of four air bag modules, SRS air bag control unit (SRS-ECU), front impact sensors, side impact sensors, SRS warning lamp and clock spring. The air bags are located in the centre of the steering wheel, above the glove box, and built into the front seat back assemblies. Each air bag has a folded air bag and an inflator unit. The SRS-ECU under the floor console monitors the system and has a safing G sensor and an analog G sensor. The front impact sensors are installed on the headlamp support panel. The side impact sensor, which is located inside the quarter panels <short wheelbase> or center pillar <long wheelbase> inner, monitors any shocks coming from the side of the vehicle. The warning lamp on the instrument panel indicates the operational status of the SRS. The clock spring is installed in the steering column.
The SRS side air bag deploys if an impact received at the side of the vehicle is stronger than a certain set value, in order to protect the upper bodies of front seat passengers in the event of a collision. Only authorized service personnel should do work on or around the SRS components. Those service personnel should read this manual carefully before starting any such work. Extreme care must be used when servicing the SRS to avoid injury to the service personnel (by inadvertent deployment of the air bags) or the driver (by rendering the SRS inoperative).

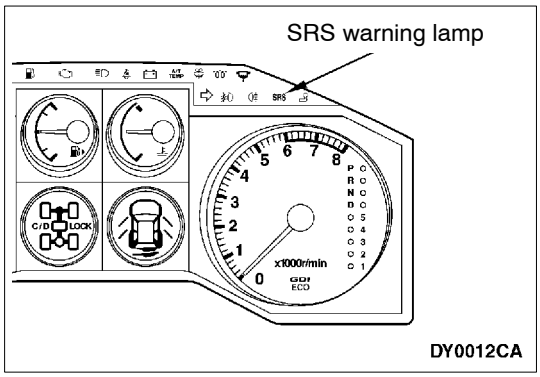


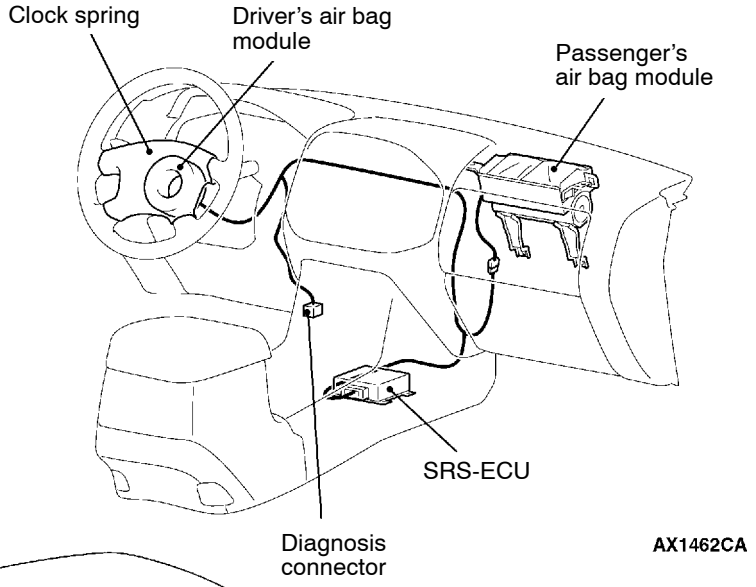


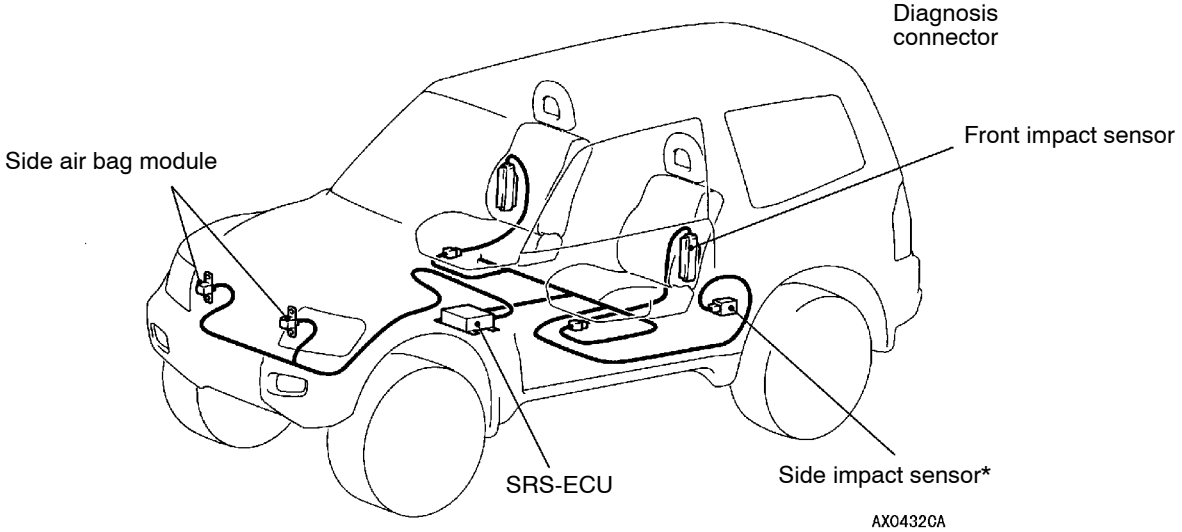


NOTE
*: Indicates the parts equipped on the right and left sides.

Purchased from www.WorkshopManuals.co.uk

www.WorkshopManuals.co.uk

# SRS SERVICE PRECAUTIONS

1. In order to avoid injury to yourself or others from accidental deployment of the air bag during servicing, read and carefully follow all the precautions and procedures described in this manual.
2. Do not use any electrical test equipment on or near SRS components, except those specified on P.52B-6.
3. **Never Attempt to Repair the Following Components:**
   - SRS air bag control unit (SRS-ECU)
   - Front impact sensor
   - Clock spring
   - Driver's and front passenger's air bag modules
   - Side air bag module
   - Side impact sensor

   If any of these components are diagnosed as faulty, they should only be replaced, in accordance with the INDIVIDUAL COMPONENTS SERVICE procedures in this manual, starting at page 52B-26.

**SRS-ECU connector**

**Vehicles without side air bags**

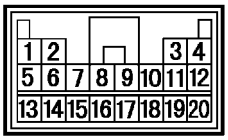


W0997AL

**Vehicles with side air bags**

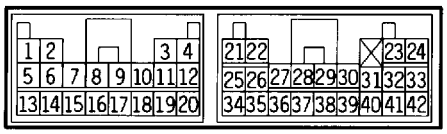


W0582AU

4. **Do not attempt to repair the wiring harness connectors of the SRS. If a defective wiring harness is found, repair or replace it by referring to the table below.**

Purchased from www.WorkshopManuals.co.uk

www.WorkshopManuals.co.uk

| SRS-ECU terminal No. | Destination of harness | Remedy |
|---|---|---|
| 1, 2, 3, 4 | Instrument panel wiring harness → Front wiring harness → Front impact sensor | Repair or replace each wiring harness. |
| 7 | Instrument panel wiring harness → Earth | Repair or replace the instrument panel wiring harness. |
| 8 | Instrument panel wiring harness → SRS warning lamp | |
| 9, 10 | Instrument panel wiring harness → Passenger's air bag module | |
| 11, 12 | Instrument panel wiring harness → Clock spring to driver's air bag module | Replace the clock spring or repair or replace the instrument panel wiring harness. |
| 13 | Instrument panel wiring harness → Junction block (fuse No.8) | Repair or replace the instrument panel wiring harness. |
| 16 | Instrument panel wiring harness → Junction block (fuse No.6) | |
| 20 | Instrument panel wiring harness → Diagnosis connector | |
| 21, 22 | Side air bag wiring harness → Left side air bag module | Repair or replace side air bag wiring harness. |
| 23, 24 | Side air bag wiring harness → Side air bag module (R.H.) | |
| 34, 35, 36 | Side air bag wiring harness → Floor wiring harness → Side impact sensor (L.H.) | Repair or replace each wiring harness. |
| 40, 41, 42 | Side air bag wiring harness → Floor wiring harness → Side impact sensor (R.H.) | |

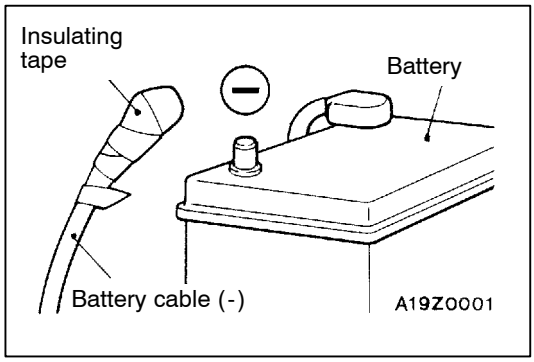


5. **After disconnecting the battery cable, wait 60 seconds or more before proceeding with the following work. In addition, insulate the negative battery terminal with a tape. The condenser inside the SRS-ECU is designed to retain enough voltage to deploy the air bag for a short time even after the battery has been disconnected, so serious injury may result from unintended air bag deployment if work is done on the SRS system immediately after the battery cables are disconnected.**

6. **SRS components should not be subjected to heat over 93°C, so remove the SRS-ECU, front impact sensor, driver's air bag module, clock spring, passenger's air bag module, front seat assembly(side air bag module) and side impact sensor before drying or baking the vehicle after painting.**
7. **Whenever you finish servicing the SRS, always erase the diagnosis code and check warning lamp operation to make sure that the system functions properly. (Refer to P.52B-7)**

Purchased from www.WorkshopManuals.co.uk

www.WorkshopManuals.co.uk

8. **If checks are carried out by using the SRS-ECU harness connector, observe the following procedures:**
   **Insert the special tool (probe in the harness set) into connector from harness side (rear side), and connect the tester to this probe. If any tool than special tool is used, damage to the harness and other components will result. Never insert the probe directly to the terminals from the front of the connector. The terminals are plated to increase their conductivity, so that if they are touched directly by the probe, the plating may break, which will cause drops in reliability.**

**Vehicles without side air bags**

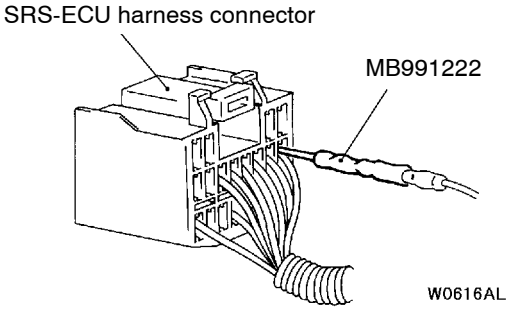


SRS-ECU harness connector (rear view)

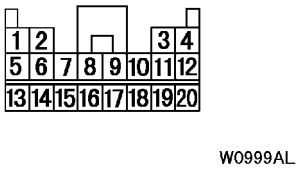


**Vehicles with side air bags**

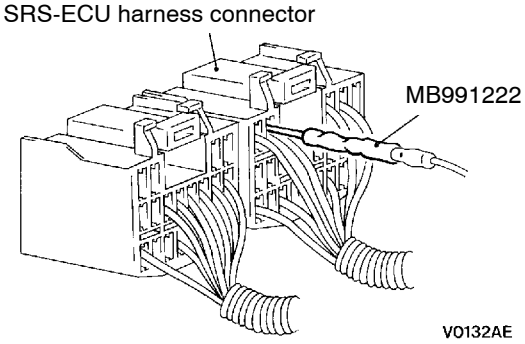


SRS-ECU harness connector (rear view)

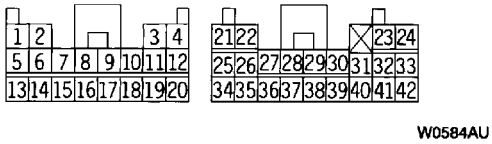


# SPECIAL TOOLS

| Tools | No. | Name | Application |
|---|---|---|---|
| 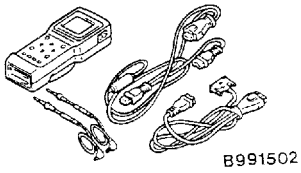  | MB991502 | MUT-II sub assembly | • Reading and erasing diagnosis code<br>• Reading trouble period<br>• Reading erase times |
| 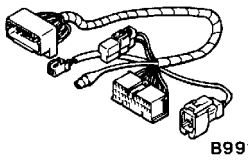  | MB991606 or MB991613 | SRS check harness | Checking SRS electrical circuitry |

Purchased from www.WorkshopManuals.co.uk

www.WorkshopManuals.co.uk

| Tools | No. | Name | Application |
|---|---|---|---|
| A<br>B<br>C<br>D<br> 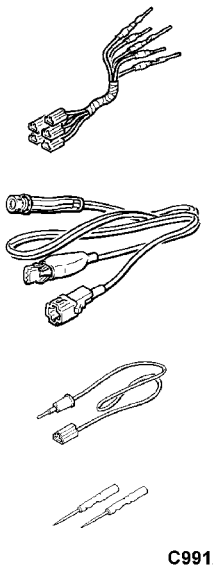 <br>C991223 | MB991223<br>A: MB991219<br>B: MB991220<br>C: MB991221<br>D: MB991222 | Harness set<br>A: Check harness<br>B: LED harness<br>C: LED harness adapter<br>D: Probe | Checking continuity and measuring voltage at SRS-ECU harness connector |
| 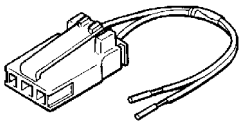 <br>R372530 | MR372530 | SRS air bag adapter harness | Deploying driver's air bag module inside vehicle |
| 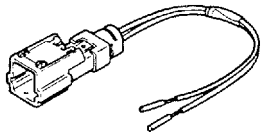 <br>B686560 | MB686560 | SRS air bag adapter harness | Deploying front passenger's air bag module and side air bag modules inside or outside vehicle |

# TEST EQUIPMENT

| Tool | Name | Application |
|---|---|---|
| <br>13R0746 | Digital multi-meter | Checking SRS electrical circuitry (Use multi-meter for which the maximum test current is 2 mA or less at minimum range of resistance measurement |

Purchased from www.WorkshopManuals.co.uk

www.WorkshopManuals.co.uk

# TROUBLESHOOTING

## STANDARD FLOW OF DIAGNOSTIC TROUBLESHOOTING

Refer to GROUP 00 - How to Use Troubleshooting/Inspection Service Points.

## DIAGNOSIS FUNCTION

### DIAGNOSIS CODES CHECK

Connect the MUT-II to the diagnosis connector (16-pin) under the instrument cover, then check diagnosis codes.
(Refer to GROUP 00 - How to Use Troubleshooting/Inspection Service Points.)

### ERASING DIAGNOSIS CODES

### WHEN USING THE MUT-II

Connect the MUT-II to the diagnosis connector and erase the diagnosis code.

**Caution**
**Turn off the ignition switch before connecting or disconnecting the MUT-II.**

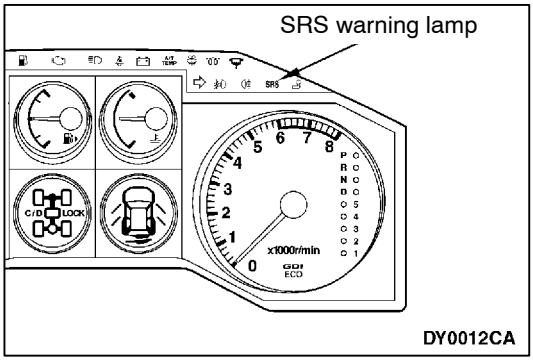


## SRS WARNING LAMP CHECK

1. Check that the SRS warning lamp comes on when the ignition switch is turned ON.
2. Check that the SRS warning lamp illuminates for about 7 seconds and then goes out.
3. If this is not the cause, check the diagnosis codes.

## INSPECTION CHART FOR DIAGNOSIS CODES

| Code No. | Diagnosis item | Reference page |
|---|---|---|
| 11, 12, 13 | Front impact sensor system | 52B-8 |
| 14 | Front impact analog G-sensor system inside SRS-ECU | 52B-9 |
| 15, 16 | Front impact safing G-sensor system inside SRS-ECU | 52B-9 |
| 17 | Side impact safing G-sensor system inside SRS-ECU | 52B-9 |
| 21*2, 22*2, 61, 62 | Driver's air bag module (squib) system | 52B-10 |
| 24*2, 25*2, 64, 65 | Passenger's air bag module (squib) system | 52B-12 |
| 31, 32 | DC-DC converter system inside SRS-ECU | 52B-9 |
| 34*1 | Connector lock system | 52B-13 |
| 35 | SRS-ECU (deployed air bag) system | 52B-13 |
| 41*1 | Power circuit system (fuse No.6 circuit) | 52B-13 |
| 42*1 | Power circuit system (fuse No.8 circuit) | 52B-13 |

Purchased from www.WorkshopManuals.co.uk

www.WorkshopManuals.co.uk

| Code No. | Diagnosis item | | Reference page |
|---|---|---|---|
| 43*1 | SRS warning lamp drive circuit system | Lamp does not illuminate. | 52B-14 |
| | | Lamp does not go out off. | 52B-14 |
| 44*1 | SRS warning lamp drive circuit system | | 52B-14 |
| 45 | Internal circuit system of non-volatile memory (EEPROM) inside SRS-ECU | | 52B-9 |
| 51, 52 | Driver's air bag module (squib) system | | 52B-9 |
| 54, 55 | Passenger's air bag module (squib) system | | 52B-9 |
| 71*2, 72*2, 75, 76 | Side air bag module (R.H.) (squib) system | | 52B-15 |
| 73, 74 | Side air bag module (R.H.) (squib) system | | 52B-9 |
| 79, 93 | Side impact sensor (L.H.) communication system | | 52B-16 |
| 81*2, 82*2, 85, 86 | Side air bag module (L.H.) (squib) system | | 52B-16 |
| 83, 84 | Side air bag module (L.H.) (squib ignition drive circuit) system | | 52B-9 |
| 89, 96 | Side impact sensor (R.H.) communication system | | 52B-17 |
| 91*1 | Side impact sensor (L.H.) power supply circuit system | | 52B-17 |
| 92 | Analog G-sensor system inside side impact sensor | | 52B-17 |
| 94*1 | Side impact sensor (R.H.) power supply circuit | | 52B-18 |
| 95 | Analog G-sensor system inside side impact sensor (R.H.) | | 52B-17 |

NOTE
1. *1: If the trouble(s) are extinguished, the SRS warning lamp will go out with diagnosis code history automatically erased.
2. *2: If the vehicle condition return to normal, the diagnosis code will be automatically erased, and the SRS warning lamp will return to normal.
3. If the vehicle has a discharged battery, it will store the fault codes 41 or 42. When these diagnosis codes are displayed, check the battery.

## INSPECTION PROCEDURE CLASSIFIED BY DIAGNOSIS CODE

| Code No.11, 12 or 13 Front impact sensor system | Probable cause |
|---|---|
| These diagnosis codes are output if there is abnormal resistance between the input terminals of the front impact sensors inside the SRS-ECU.<br>The trouble causes for each diagnosis code No. are as follow. | • Malfunction of harness or connector<br>• Malfunction of front impact sensor<br>• Malfunction of SRS-ECU |

**Table 1**

| Code No. | Trouble Symptom |
|---|---|
| 11 | • Short circuit in front impact sensor or harness<br>• Short circuit in front impact sensor harness leading to the vehicle body ground<br>• Short circuit in front impact sensor harness leading to the power supply |
| 12 | • Open circuit in either left or right front impact sensor or harness<br>• Short circuit in front impact sensor harness leading to the power supply |
| 13 | • Open circuit in both left and right front impact sensor or harness<br>• Short circuit in front impact sensor harness leading to the power supply |

Purchased from www.WorkshopManuals.co.uk

www.WorkshopManuals.co.uk

Check the front impact sensor (Refer to P.52B-21.)

OK ↓

Measure at SRS-ECU connector E-111.
- Disconnect the connector and measure at the harness side.
- Resistances between terminal 1 and 2, 3 and 4
  **NG**: 2 Ω or less (short circuit)
  **NG**: 1 MΩ or more (open circuit)
- Continuity between 1, 2, 3, 4 and body earth
  **OK**: No continuity

NG → **Check the following connector:** A-31, A-25, D-27, E-111

OK ↓ Check the trouble symptoms.

NG ↓ Check the harness wire between the front impact sensor and the SRS-ECU, and repair if necessary.

NG ↓ **Repair**

OK ↓ Replace the SRS-ECU.

| **Code No.14, 15, 16, 17, 31, 32, 45, 51, 52, 54, 55, 73, 74, 83, 84 System inside SRS-ECU** | **Probable cause** |
|---|---|
| These diagnosis trouble codes are output when a fault is detected in the SRS-ECU.<br>The trouble causes for each diagnosis code No. are as follows. | Malfunction of SRS-ECU |

**Table 2**

| Code No. | Defective part | Trouble Symptom |
|---|---|---|
| 14 | Front impact analog G-sensor | ● When the analog G-sensor is not operating<br>● When the characteristics of the analog G-sensor are abnormal<br>● When the output from the analog G-sensor is abnormal |
| 15 | Front impact safing G-sensor | Short circuit in the safing G-sensor |
| 16 | | Open circuit in the safing G-sensor |
| 17 | Side impact safing G-sensor | ● When the safing G-sensor is not operating<br>● When the characteristics of the safing G-sensor are abnormal<br>● When the output from the safing G-sensor is abnormal |
| 31 | DC-DC converter | Voltage at the DC-DC converter terminal is higher than the specified value for five seconds or more. |
| 32 | | Voltage at the DC-DC converter terminal is lower than the specified value for five seconds or more(this is not detected if diagnosis code No.41 or 42 indicating battery voltage drop has been output.) |
| 45 | Non-volatile memory (EEPROM) | When the non-volatile memory (EEPROM) is abnormal |
| 51 | Driver's side air bag module (squib) | Short circuit in the squib ignition drive circuit |
| 52 | | Open circuit in the squib ignition drive circuit |
| 54 | Passenger's air bag module (squib) | Short circuit in the squib ignition drive circuit |
| 55 | | Open circuit in the squib ignition drive circuit |
| 73 | Side air bag module (R.H.) (squib) | Short circuit in the squib ignition drive circuit |
| 74 | | Open circuit in the squib ignition drive circuit |
| 83 | Side air bag module (L.H.) (squib) | Short circuit in the squib ignition drive circuit |
| 84 | | Open circuit in the squib ignition drive circuit |

Replace the SRS-ECU.

Purchased from www.WorkshopManuals.co.uk

www.WorkshopManuals.co.uk

| Code No.21, 22, 61, 62 Driver's side air bag module (squib) system | Probable cause |
|---|---|
| These diagnosis codes are output if there is an abnormal resistance between the input terminals of the driver's side air bag module (squib) inside the SRS-ECU. The trouble causes for each diagnosis code No. are as follow. However, as for code Nos.21 and 22, if the vehicle's condition return to normal, SRS warning lamp will go out. (Diagnosis code will remain stored) | ● Malfunction of clock spring<br>● Partially open as clock spring is not in neutral position<br>● Malfunction of harness or connector<br>● Malfunction of driver's air bag module (squib)<br>● Malfunction of SRS-ECU |

**Table 3**

| Code No. | Trouble Symptom |
|---|---|
| 21 | ● Short circuit in driver's air bag module (squib) or harness short<br>● Short circuit in clock spring<br>● Poor connector contact* |
| 22 | ● Open circuit in driver's air bag module (squib) or open harness<br>● Open circuit in clock spring<br>● Disconnected driver's air bag module (squib) connector<br>● Partially open as clock spring is not in neutral position<br>● Poor connector contact |
| 61 | Short circuit in driver's air bag module (squib) harness leading to the power supply |
| 62 | Short circuit in driver's air bag module (squib) harness leading to the earth |

NOTE

*: The shorting bars, which short positive (+) and negative (-) wires to prevent the air bags from accidental deployment during the disconnection of the connector, are set in the squib circuit connectors. In a defective connector, the short-bar may be still working even after the connection of the connecter.

Purchased from www.WorkshopManuals.co.uk

www.WorkshopManuals.co.uk

Check the clock spring (Refer to P.52B-37.)

NG → **Replace**

OK

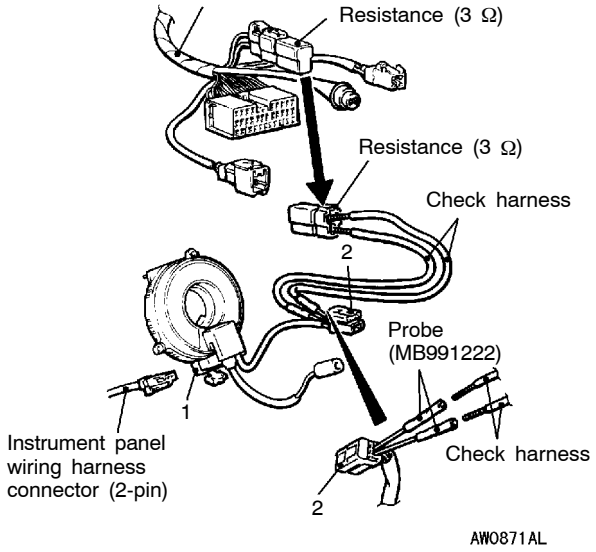


**MUT-II Self-Diag Code**

- Connect clock spring connector No.1 D-206 and the harness side connector(2-pin).
- Insert the probes (MB991222) from the rear of the clock spring No.2connector and connect the check harness to the probe.
  Caution
  Never insert the probe directly to the terminals from the front of the connector.
- Disconnect the resistance connector from the SRS check harness (MB991606 or MB991613) and connect to the check harness.
- Connect the negative (-) battery terminal.
- Erase diagnosis code memory.

Is code Nos.21, 22, 61 or 62 displayed?

YES

**Check the following connector:** D-206, E-111

OK

Check the trouble symptoms.

NG

Check wiring harness between clock spring and SRS-ECU.

OK

Replace the SRS-ECU.

NG

**Repair**

NG

**Repair**

NO

Replace driver's air bag module (squib).

Purchased from www.WorkshopManuals.co.uk

www.WorkshopManuals.co.uk

| Code No.24, 25, 64, 65 Passenger's air bag module (squib) system | Probable cause |
|---|---|
| These diagnosis codes are output if there is an abnormal resistance between the input terminals of the passenger's air bag module (squib) inside the SRS-ECU. The trouble causes for each diagnosis code No. are as follow. However, as for code Nos.24, 25, if the vehicle's condition return to normal, SRS warning lamp will go out. (Diagnosis code will remain stored). | ● Malfunction of harness or connector<br>● Malfunction of passenger's air bag module (squib)<br>● Malfunction of SRS-ECU |

**Table 4**

| Code No. | Trouble Symptom |
|---|---|
| 24 | ● Short in passenger's air bag module (squib) or harness short<br>● Poor connector contact* |
| 25 | ● Open circuit in passenger's air bag module (squib) or open harness<br>● Poor connector contact |
| 64 | Short in passenger's air bag module (squib) harness leading to the power supply |
| 65 | Short in passenger's air bag module (squib) harness leading to the earth |

NOTE
*: The shorting bars, which short positive (+) and negative (-) wires to prevent the air bags from accidental deployment during the disconnection of the connector, are set in the squib circuit connectors. In a defective connector, the short-bar may be still working even after the connection of the connector.

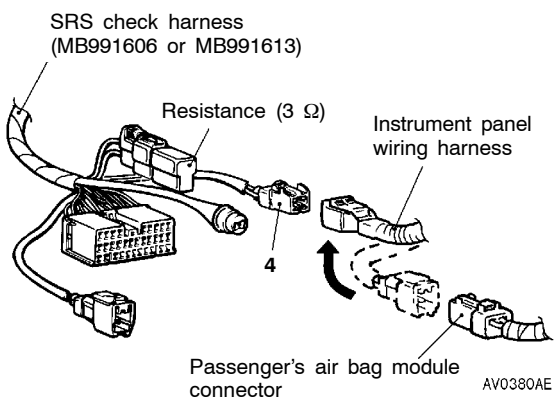


**MUT-II Diagnosis Code**
- Disconnect passenger's air bag module connector D-10, and connect the harness side connector to SRS check harness (MB991606 or MB991613) connector No.4.
- Connect the negative (-) battery terminal.
- Erase diagnosis code memory.

Is code Nos.24, 25, 64 or 65 output?

YES → **Check the following connectors:** D-10, E-111
- OK → Check the trouble symptoms.
  - NG → **Repair**
- Check the trouble symptoms. → NG → Check the harness wire between the passenger's air bag module (squib) and the SRS-ECU.
  - OK → Replace the SRS-ECU.
  - NG → **Repair**

NO → Replace passenger's air bag module (squib).

Purchased from www.WorkshopManuals.co.uk

www.WorkshopManuals.co.uk

| Code No.34 Connector lock system | Probable cause |
|---|---|
| This diagnosis code is output when the SRS-ECU detects that the SRS-ECU connector is improperly connected. However, when vehicle condition returns to normal, this code will be automatically erased, and the SRS warning lamp will go out. | • Malfunction of connector<br>• Malfunction of SRS-ECU |

Are SRS-ECU connectors E-111, E-110 <vehicles with side air bags> connected properly.
- YES → Check the following connectors: E-111,E-110 <vehicles with side air bags>
  - OK → Replace the SRS-ECU.
  - NG → **Repair**
- NO → **Repair**

| Code No.35 SRS-ECU (deployed air bag) system | Probable cause |
|---|---|
| This code is displayed after deployment of air bags. If displayed before deployment, the code indicates malfunction probably present in SRS-ECU. | Malfunction of SRS-ECU |

Replace the SRS-ECU.

| Code No.41 Power circuit system (fuse No.6 circuit)<br>Code No.42 Power circuit system (fuse No.8 circuit) | Probable cause |
|---|---|
| Code No.41 is displayed if voltage between $IG_1$ terminal (SRS-ECU, terminal 16) and earth is lower than specified for five successive seconds or more.<br>Code No.42 is displayed if voltage between $IG_1$ terminal (SRS-ECU, terminal 13) and earth is lower than specified for five successive seconds or more.<br>However, when vehicle condition returns to normal, these codes will be automatically erased, and the SRS warning lamp will go out. If codes No.41 and 42 are displayed together, check the battery first as vehicle may have discharged battery. | • Malfunction of harness or connector<br>• Malfunction of SRS-ECU |

Measure at SRS-ECU connector E-111.
- Disconnect the connector and measure at the harness side.
- Connect the negative (-) battery terminal.
- Ignition switch: ON
- Voltage between terminal 16 and body earth (in case of code No. 41)
  **OK**: 9 V or more
- Voltage between terminal 13 and body earth (code No.42)
  **OK**: 9 V or more

- NG → **Check the following connectors:** D-208, D-209, D-210, E-111
  - OK → Check the trouble symptoms.
    - NG → Check the harness wire between the SRS-ECU and the ignition switch $IG_1$, and repair if necessary.
  - NG → **Repair**
- OK → Replace the SRS-ECU.

Purchased from www.WorkshopManuals.co.uk

www.WorkshopManuals.co.uk

| Code No.43 SRS warning lamp drive circuit system (Lamp does not come on.) | Probable cause |
|---|---|
| This diagnosis code is output when a open circuit is present for5 successive seconds or more in SRS warning lamp drive circuit. However, the vehicle condition return to normal condition, this code, if displayed due to open circuit, will be automatically erased. | • Malfunction of harness or connector<br>• Blown bulb<br>• Malfunction of SRS-ECU<br>• Malfunction of combination meter |

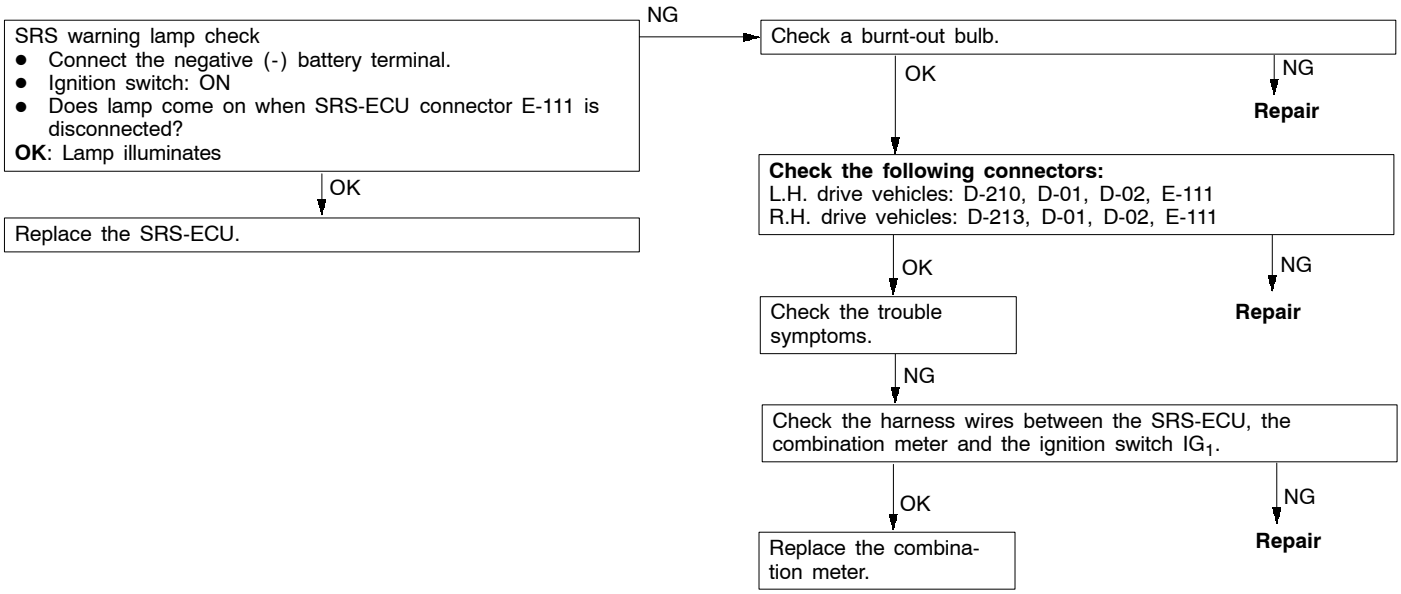


| Code No.43 SRS warning lamp drive circuit system (Lamp does not go out.) | Probable cause |
|---|---|
| This diagnosis code is output when a short to earth occurs in the harness between the SRS warning lamp and the SRS-ECU. However, the vehicle condition returns to normal condition, this code will be automatically erased, and SRS warning lamp will go out. | • Malfunction of harness or connector<br>• Malfunction of SRS-ECU<br>• Malfunction of combination meter |

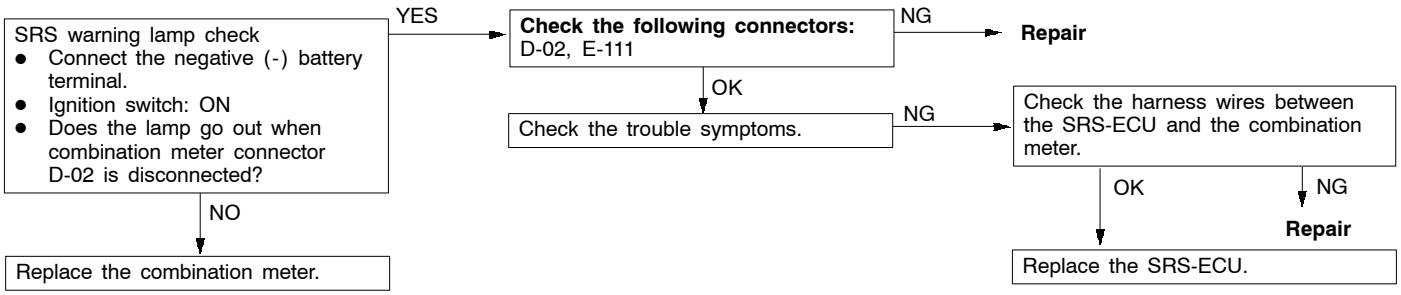


| Code No.44 SRS warning lamp drive circuit system | Probable cause |
|---|---|
| This diagnosis code is output when a short occurs in the lamp drive circuit or a malfunction of the output transistor inside the SRS-ECU is detected while the SRS-ECU is monitoring the SRS warning lamp drive circuit.<br>However, when vehicle condition returns to normal, these codes will be automatically erased, and the SRS warning lamp will go out. | • Malfunction of harness or connector<br>• Malfunction of SRS-ECU |

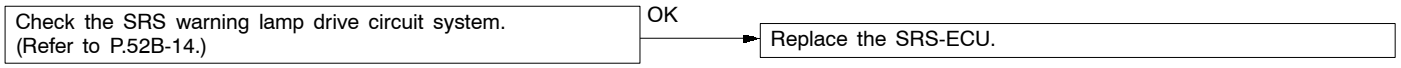


Purchased from www.WorkshopManuals.co.uk

www.WorkshopManuals.co.uk

| Code No. 71, 72, 75, 76 Side air bag module (R.H.) (squib) system | Probable cause |
|---|---|
| These diagnosis codes are output if there is an abnormal resistance between the input terminals of the side air bag module (R.H.) (squib) inside the SRS-ECU. The trouble causes for each diagnosis code No. are as follow. However, as for code No.71, 72, if the vehicle condition returns to normal, the SRS warning lamp will go out. (Diagnosis code will remain stored). | ● Malfunction of harness or connector<br>● Malfunction of side air bag module (R.H.) (squib)<br>● Malfunction of SRS-ECU |

**Table 5**

| Code No. | Trouble Symptom |
|---|---|
| 71 | Short in side air bag module (R.H.) (squib) or harness short |
| 72 | ● Open in side air bag module (R.H.) (squib) or open harness<br>● Poor connector contact |
| 75 | Short in side air bag module (R.H.) (squib) harness leading to the power supply |
| 76 | Short in side air bag module (R.H.) (squib) harness leading to the earth |

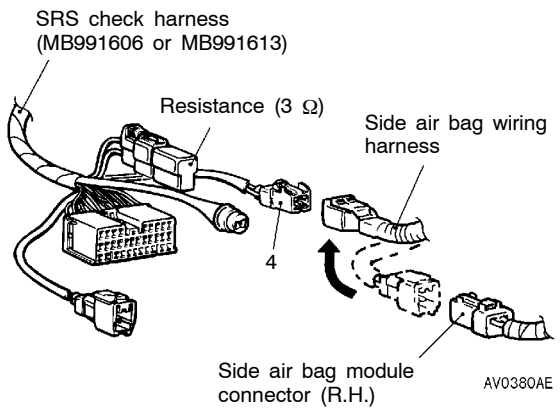


**MUT-II Self-Diag Code**
- Disconnect the side air bag module (R.H.) connector F-28 and connect the harness side connector to the SRS check harness (MB991606 or MB991613) No.4 connector.
- Connect the negative (-) battery terminal.
- Erase diagnosis code memory.

Are code No.71, 72, 75 or 76 displayed?

YES → **Check the following connectors: F-28, E-110**
- OK → Check the trouble symptoms.
  - NG → **Repair**
- Check the trouble symptoms. NG → Check wiring harness between the side air bag module (R.H.) (squib) and SRS-ECU.
  - OK → Replace the SRS-ECU.
  - NG → **Repair**

NO → Replace the driver's front seat back assembly.

Purchased from www.WorkshopManuals.co.uk

www.WorkshopManuals.co.uk

| Code No.79, 93 Side impact sensor communication system (L.H.) | Probable cause |
|---|---|
| These diagnosis codes are output if communication between the side impact sensor (L.H.)and the SRS-ECU is not possible (code No.93) or abnormal (code No.79). | ● Malfunction of harness or connector<br>● Malfunction of side impact sensor (L.H.)<br>● Malfunction of SRS-ECU |

**MUT-II Self-Diag Code**
- Switch over the right side impact sensor (R.H.) and the side impact sensor (L.H.).
- Connect the negative (-) battery terminal.
- Erase diagnosis code memory.

Are code Nos.79 and 93 erased and code Nos.89 and 96 output?

NO → **Check the following connectors:** F-19, E-21, E-110
- OK → Check the trouble symptoms.
  - OK → Replace the side impact sensor (L.H.) mounted driver's side.
  - NG → Check the harness wire between the left side impact sensor and the SRS-ECU.
    - OK → Replace the SRS-ECU.
    - NG → **Repair**
- NG → **Repair**

YES → Replace the side impact sensor (L.H.) mounted driver's side.

| Code No.81, 82, 85, 86 Side air bag module (L.H.) (squib) system | Probable cause |
|---|---|
| These diagnosis codes are output if there is an abnormal resistance between the input terminals of the side air bag module (L.H.) (squib) inside the SRS-ECU. The trouble causes for each diagnosis code No. are as follow. However, as for code No.81, 82, if the vehicle condition returns to normal, the SRS warning lamp will go out. (Diagnosis code will remain stored) | ● Malfunction of harness or connector<br>● Malfunction of side air bag module (L.H.) (squib)<br>● Malfunction of SRS-ECU |

## Table 6

| Code No. | Trouble Symptom |
|---|---|
| 81 | Short in side air bag module (L.H.) (squib) or harness short |
| 82 | ● Open circuit in side air bag module (L.H.) (squib) or open harness<br>● Poor connector contact |
| 85 | Short in side air bag module (L.H.) (squib) harness leading to the power supply harness |
| 86 | Short in side air bag module (L.H.) (squib) harness leading to the earth |

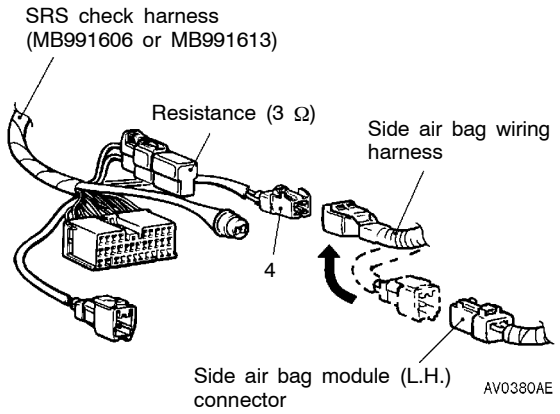


**MUT-II Self-Diag Code**
- Disconnect side air bag module connector (L.H.) F-21 and connect the harness side connector to SRS check harness (MB991606 or MB991613) connector No.4.
- Connect the negative (-) battery terminal.
- Erase diagnosis code memory.

Is code No.81, 82, 85 or 86 displayed?

YES → **Check the following connectors:** F-21, E-110
- OK → Check the trouble symptoms.
  - OK → Check wiring harness between side air bag module (L.H.) (squib) and SRS-ECU.
    - OK → Replace the SRS-ECU.
    - NG → **Repair**
  - NG → **Repair**
- NG → **Repair**

NO → Replace the passenger's front seat back assembly

Purchased from www.WorkshopManuals.co.uk

www.WorkshopManuals.co.uk

| Code No.89, 96 Side impact sensor (R.H.) communication system | Probable cause |
|---|---|
| These diagnosis codes are output if communication between the side impact sensor (R.H.) and the SRS-ECU is not possible (code No.96) or abnormal (code No.89). | • Malfunction of harness or connector<br>• Malfunction of side impact sensor (R.H.)<br>• Malfunction of SRS-ECU |

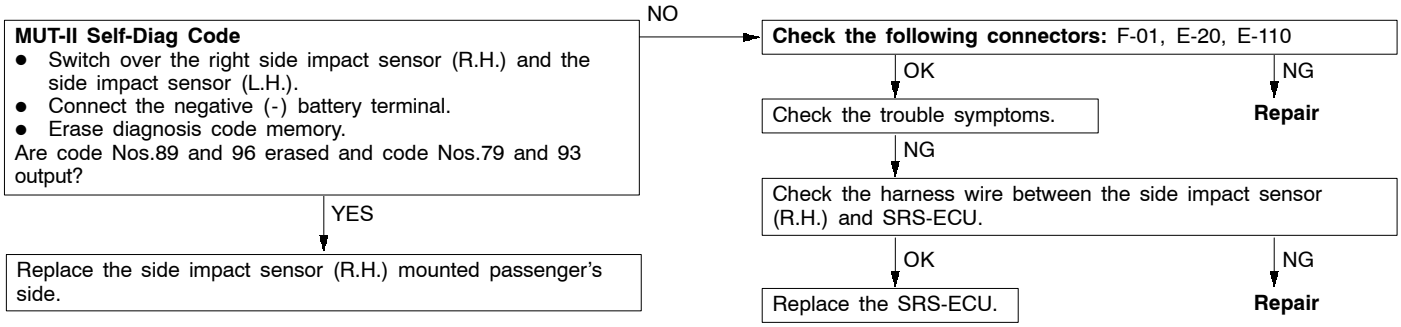


| Code No.91 Side impact sensor (L.H.) power supply circuit system | Probable cause |
|---|---|
| Power supply voltage of side impact sensor (L.H.) is lower than specified for five successive seconds or more.<br>However, when vehicle condition returns to normal, this code will be automatically erased, and the SRS warning lamp will go out. | • Malfunction of harness or connector<br>• Malfunction of side impact sensor (L.H.)<br>• Malfunction of SRS-ECU |

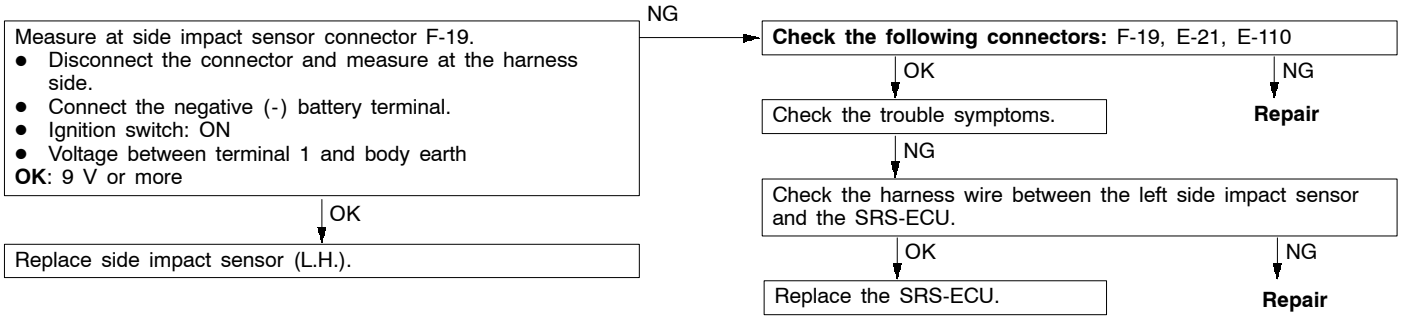


| Code No.92, 95 Side impact sensor system | Probable cause |
|---|---|
| Code No.92 is displayed when malfunction is present inside side impact sensor (L.H.).<br>Code No.95 is displayed when malfunction is present inside side impact sensor (R.H.).<br>The trouble causes for each diagnosis code No. are as follows. | • Malfunction of side impact sensor (L.H.) (in case of code No.92)<br>• Malfunction of side impact sensor (R.H.) (in case of code No.95) |

**Table 7**

| Code No. | Defective part | Trouble Symptom |
|---|---|---|
| 92 | Side impact analog G-sensor | • Not working<br>• Having abnormal characteristics<br>• Having abnormal output |
| 95 | | |

- Replace the side impact sensor (L.H.) (in case of code No.92)
- Replace the side impact sensor (R.H.) (in case of code No.95)

Purchased from www.WorkshopManuals.co.uk

www.WorkshopManuals.co.uk

| Code No.94 Side impact sensor (R.H) power supply circuit system | Probable cause |
|---|---|
| Power supply voltage of side impact sensor (R.H.) is lower than specified for consecutive five seconds or more.<br>However, when vehicle condition returns to normal, this code will be automatically erased, and the SRS warning lamp will go out. | • Malfunction of harness or connector<br>• Malfunction of side impact sensor (R.H.)<br>• Malfunction of SRS-ECU |

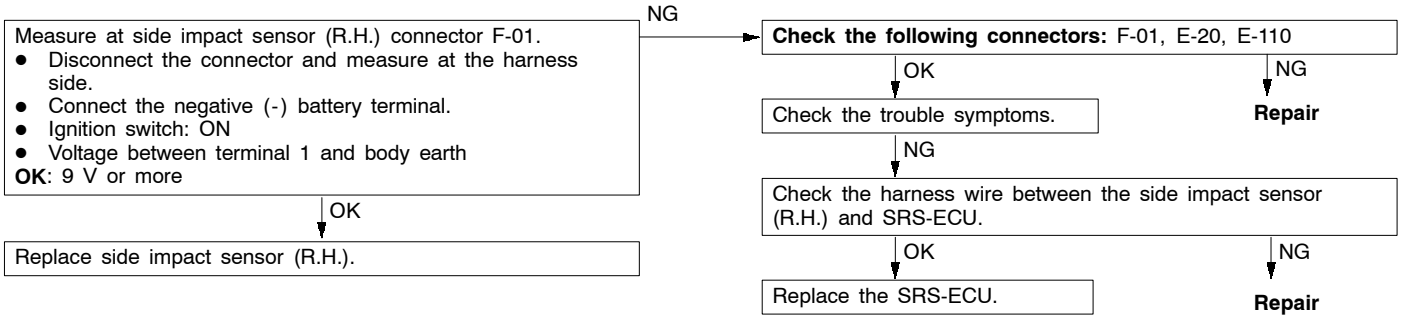


## INSPECTION CHART FOR TROUBLE SYMPTOMS

| Trouble Symptom | Inspection procedure No(s). | Reference page |
|---|---|---|
| Communication with the MUT-II is not possible. | 1 | 52B-18 |
| SRS warning lamp does not come on. | See diagnosis code No.43. | 52B-14 |
| SRS warning lamp does not go out. | See diagnosis code Nos.43, 44. | 52B-14 |

## INSPECTION PROCEDURES FOR TROUBLE SYMPTOMS

### Inspection procedure 1

| Communication with the MUT-II is not possible. | Probable cause |
|---|---|
| If communication with all other systems is not possible, there is a high possibility that there is a malfunction of the diagnosis line. When only communication with SRS air bags is impossible, open in diagnosis output circuit or power supply circuit including earth circuit may be present. | • Malfunction of harness or connector<br>• Malfunction of SRS-ECU |

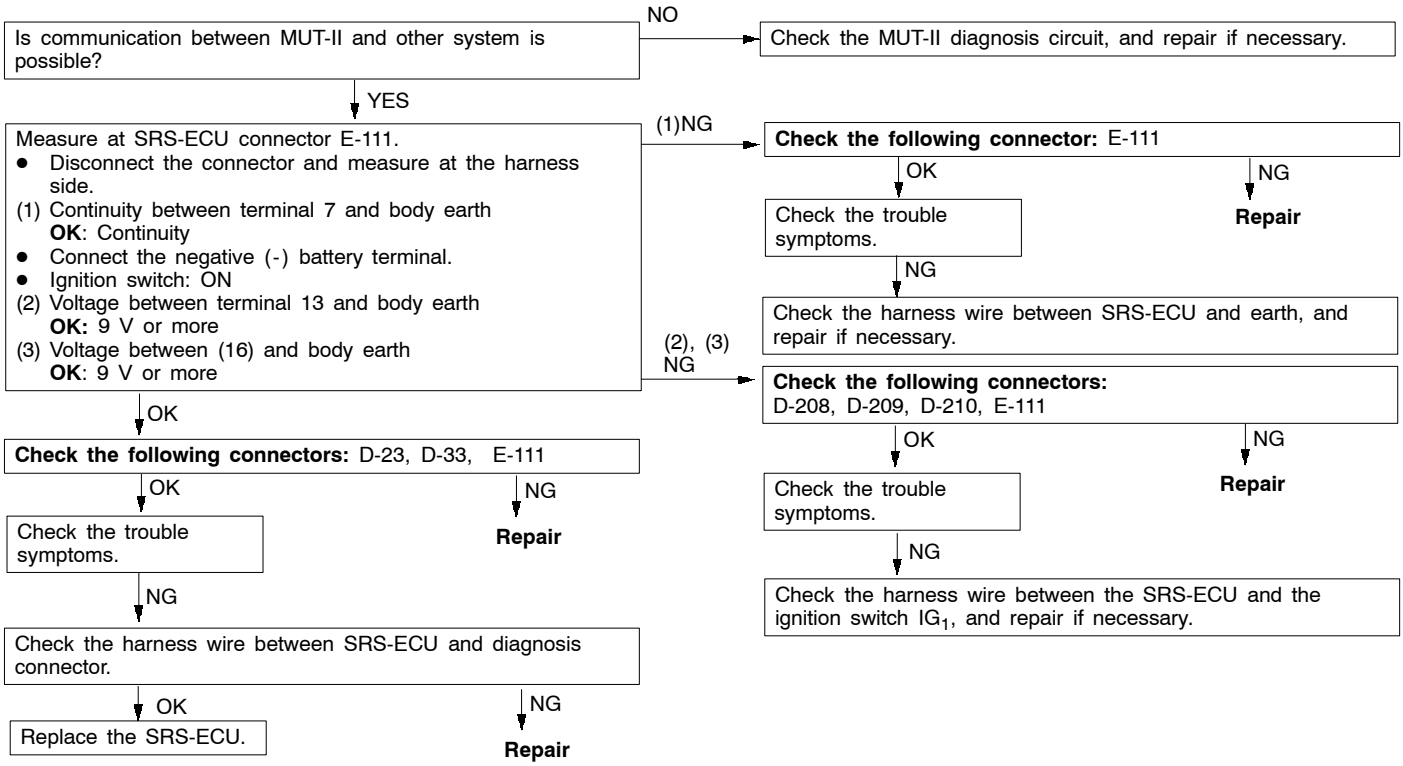


Purchased from www.WorkshopManuals.co.uk

www.WorkshopManuals.co.uk

# SRS MAINTENANCE

The SRS must be inspected by an authorized dealer 10 years after the date of vehicle registration.

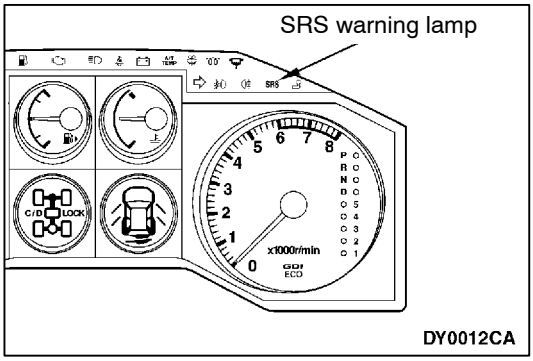


## SRS WARNING LAMP CHECK

Turn the ignition key to the ON position. Does the SRS warning lamp illuminate for about 7 seconds, turn off and then remain extinguished for at least 5 seconds? If yes, SRS system is functioning properly. If no, consult page 52B-7.

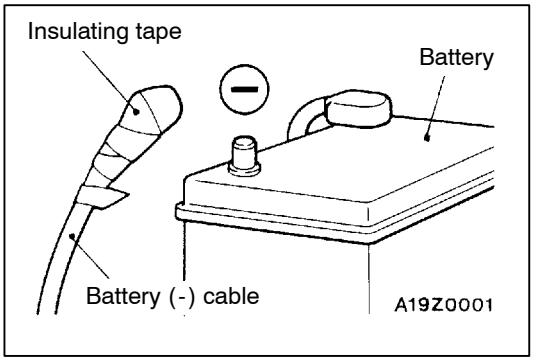


## SRS COMPONENT VISUAL CHECK

Turn the ignition key to the LOCK position, disconnect the negative battery cable and tape the terminal.

**Caution**
**Wait at least 60 seconds after disconnecting the battery cable before doing any further work. (Refer to P.52B-4.)**

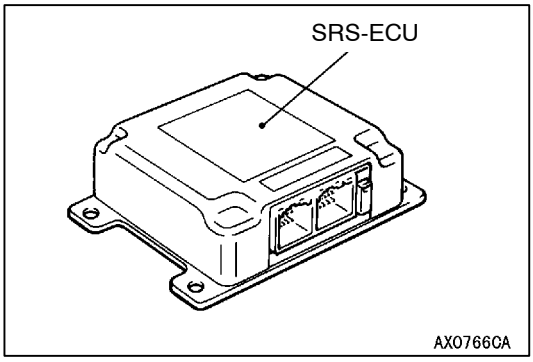


### SRS CONTROL UNIT (SRS-ECU)

1. Check SRS-ECU case and brackets for dents, cracks, deformation or rust.

   **Caution**
   **The SRS may not activate if the SRS-ECU is not installed properly, which could result in serious injury or death to the vehicle's driver or front passenger.**

2. Check connector for damage, and terminals for deformation or rust.
   Replace SRS-ECU if it fails visual check.
   (Refer to P.52B-30.)

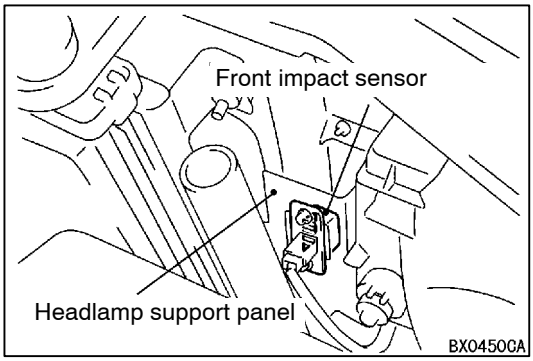


### FRONT IMPACT SENSORS

1. Check the headlamp support panel for deformation or rust.
2. Check the front impact sensor for dents, cracks, deformation or rust.
3. Check the sensor harnesses for binding, the connectors for damage, and the terminals for deformation.

Purchased from www.WorkshopManuals.co.uk

www.WorkshopManuals.co.uk

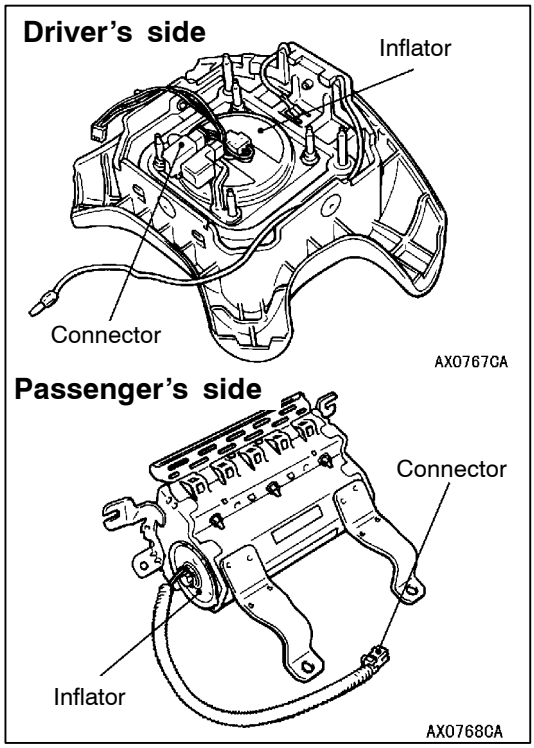


## AIR BAG MODULES, STEERING WHEEL AND CLOCK SPRING

1. Remove the air bag modules, steering wheel and clock spring. (Refer to P.52B-32.)

   **Caution**
   **The removed air bag modules should be stored in a clean, dry place with the pad cover face up.**

2. Check pad cover for dents, cracks or deformation.
3. Check connector for damage, terminals deformities, and harness for binds.
4. Check air bag inflator case for dents, cracks or deformities.
5. Check harness and connectors for damage, and terminals for deformation.

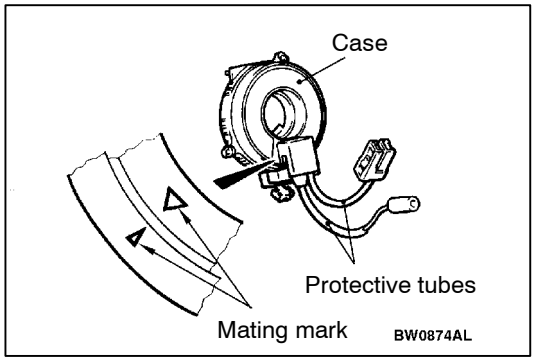


6. Check clock spring connectors and protective tube for damage, and terminals for deformation.
7. Visually check the clock spring case for damage.
8. Align the mating marks of the clock spring and, after turning the vehicle's front wheels to straight-ahead position, install the clock spring to the column switch.

   **Mating Mark Alignment**

   Turn the clock spring clockwise fully, and then turn back it approx. 3 turns counterclockwise to align the mating marks.

   **Caution**
   **If the clock spring's mating mark is not properly aligned, the steering wheel may not be completely rotational during a turn, or the flat cable within the clock spring may be severed, obstructing normal operation of the SRS and possibly leading to serious injury to the vehicle's driver or front passenger.**

9. Install the steering column covers, steering wheel and the air bag module.
10. Check steering wheel for noise, binds of difficult operation.
11. Check steering wheel for excessive free play.
    REPLACE ANY VISUALLY INSPECTED PART IF IT FAILS THAT INSPECTION. (Refer to P.52B-38.)

    **Caution**
    **The SRS may not activate if any of the above components is not installed properly, which could result in serious injury or death to the vehicle's driver or front passenger.**

Purchased from www.WorkshopManuals.co.uk

www.WorkshopManuals.co.uk

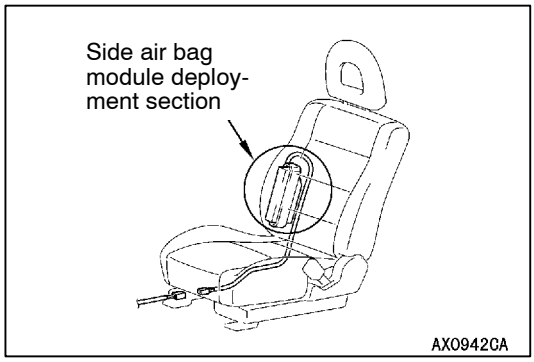


## FRONT SEAT BACK ASSEMBLY (SIDE AIR BAG MODULE)

1. Check the side air bag module deployment section in the seat for dents and deformation.
2. Check the harness for binds, the connector for damage and the terminals for deformation.

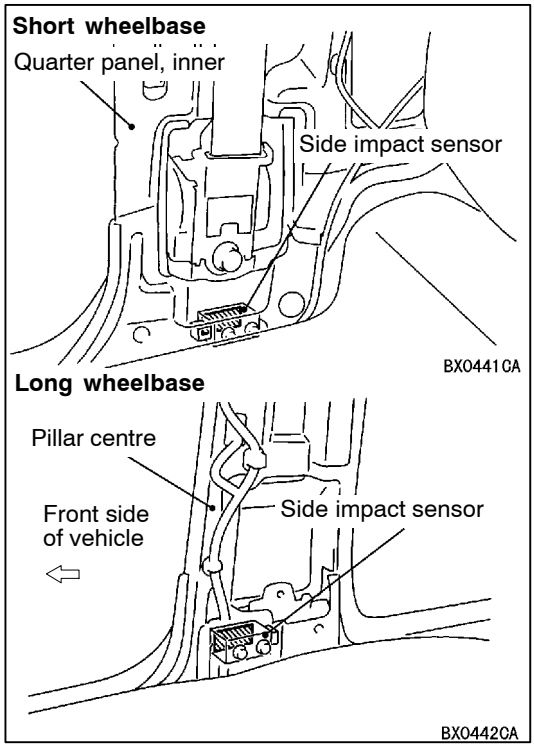


## SIDE IMPACT SENSOR

1. Check the center pillar <long wheelbase> or quarter panel inner <short wheelbase> for deformation or rust.
2. Check the side impact sensors for dents, cracks, deformation and rust.
3. Check the connector for damage and the terminals for deformation.

NOTE
The figures show side impact sensors (R.H.). The side impact sensors (L.H.) is symmetrical with the side impact sensors (R.H.).

**Caution**
**The SRS may not activate if the impact sensors are not installed properly, which could result in serious injury or death to the vehicle's driver or front passenger.**

Purchased from www.WorkshopManuals.co.uk

www.WorkshopManuals.co.uk

## INSTRUMENT PANEL WIRING HARNESS/FRONT WIRING HARNESS/SIDE AIR BAG WIRING HARNESS/FLOOR WIRING HARNESS

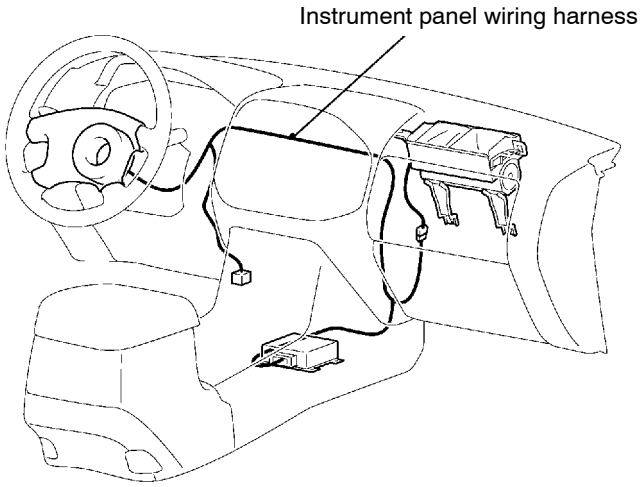


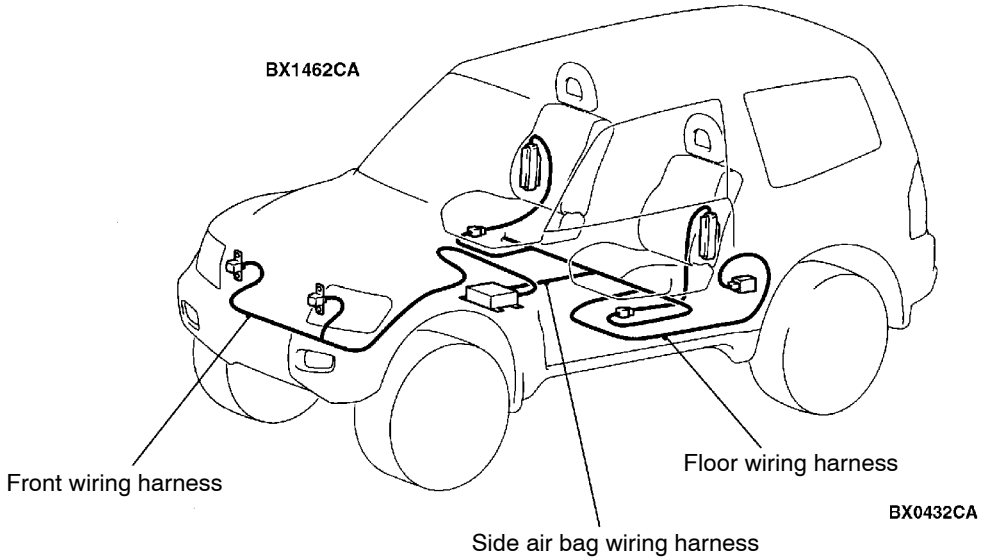


1. Check connector for poor connection.
2. Check harnesses for binds, connectors for damage, and terminals for deformation.
   FAIL THE VISUAL INSPECTION. (Refer to P.52B-4.)

   **Caution**
   **The SRS may not activate if SRS harnesses or connectors are damaged or improperly connected, which could result in serious injury or death to the vehicle's driver or front passenger.**

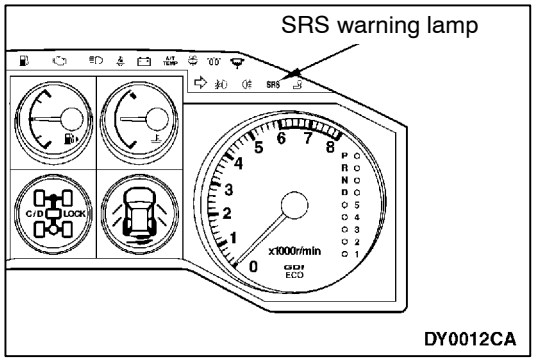


## POST-INSTALLATION INSPECTION

Reconnect the negative battery terminal. Turn the ignition key to the ON position. Does the SRS warning lamp illuminate for about 7 seconds, turn off and then remain extinguished for at least 5 seconds? If yes, SRS system is functioning properly. If no, consult page 52B-7.

Purchased from www.WorkshopManuals.co.uk

www.WorkshopManuals.co.uk

# POST-COLLISION DIAGNOSIS

Whether or not the air bags have deployed, check and service the vehicle after collision as follows:

## SRS-ECU MEMORY CHECK

1. Connect the MUT-II to the diagnosis connector. (Refer to GROUP 00 – How to Use Troubleshooting/Inspection Service Points.)

   **Caution**
   **Refer to that the ignition switch is LOCK(OFF) when connecting or disconnecting MUT-II.**

2. Read (and write down) all displayed diagnosis codes. (Refer to P.52B-7.)

   NOTE
   If battery power supply has been shut down by the collision, the MUT-II cannot communicate with the SRS-ECU. Check and, repair if necessary, the instrument panel wiring harness before the next job.

3. Use the the MUT-II to read the data list (how long trouble(s) have continued and how often memory have been erased).

**Data list**

| No | Service Data Item | Applicability |
|---|---|---|
| 92 | Number indication how often the memory is cleared. | Maximum time to be stored: 250 |
| 93 | How long problem have lasted (How long it takes from the occurrence of the problem till the first air bag squib igniting signal) | Maximum time to be stored: 9999 minutes (approximately 7 days) |
| 94 | How long problem(s) have lasted (How long it takes from the first air bag squib igniting signal till now.) | |

4. Erase the diagnosis codes and after waiting 5 seconds or more read (and write down) all displayed diagnosis codes. (Refer to P.52B-7.)

## REPAIR PROCEDURE

### DEPLOYED DRIVER'S AND FRONT PASSENGER'S AIR BAGS

1. Replace the following parts with new ones.
   - SRS-ECU (Refer to P.52B-30.)
   - Driver's air bag module (Refer to P.52B-32.)
   - Front passenger's air bag module (Refer to P.52B-32.)
2. Check the following parts and replace if malfunction is found:
   - Clock spring (Refer to P.52B-32.)
   - Steering wheel, steering column and intermediate joint
     (1) Check the wiring harness (built into steering wheel) and connectors for damage, and terminals for deformation.
     (2) Check the driver's air bag module for proper installation to the steering wheel.

Purchased from www.WorkshopManuals.co.uk

www.WorkshopManuals.co.uk

(3) Check the steering wheel for noise, binds or difficult operation and excessive free play.

3. Check the harness for binding, connectors for damage, poor connections, and terminals for deformation. (Refer to P.52B-4.)

**DEPLOYED SIDE AIR BAGS**

1. Replace the following parts with new ones:
   - SRS-ECU (Refer to P.52B-30.)
   - Side impact sensors (Refer to P.52B-41.)
   - Front seat back assemblies (Refer to P.52B-32.)
2. Check harnesses for binding, connectors for damage, poor connections, and terminals for deformation. (Refer to P.52B-4.)

**UNDEPLOYED AIR BAGS IN LOW-SPEED COLLISION**

Check the SRS components. If visible damage such as dents, cracks, or deformation are found on the SRS components, replace them with new ones. Concerning parts removed for inspection, replacement with new parts and cautions in working, refer to INDIVIDUAL COMPONENT SERVICE, P.52B-26

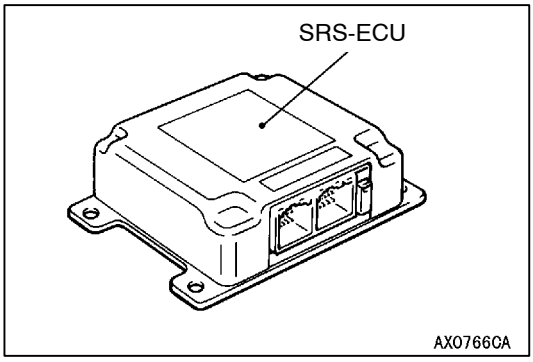


**SRS-ECU**

1. Check the SRS-ECU case and bracket for dents, cracks or deformation.
2. Check connectors for damage, and terminals for deformation.
3. Check the SRS-ECU and bracket for installation condition.

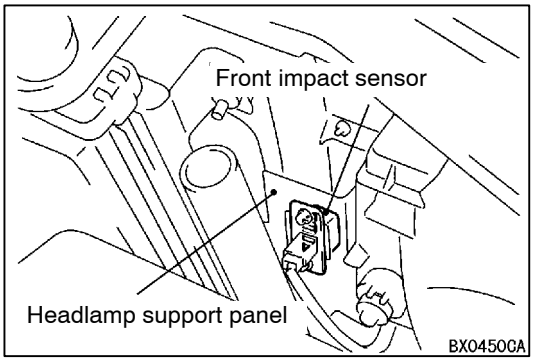


**Front impact sensor**

1. Check the headlamp support panel for deformation or rust.
2. Check the front impact sensor for dents, cracks, deformation or rust.
3. Check the sensor harness for binding, the connectors for damage, and the terminals for deformation.

Purchased from www.WorkshopManuals.co.uk

www.WorkshopManuals.co.uk

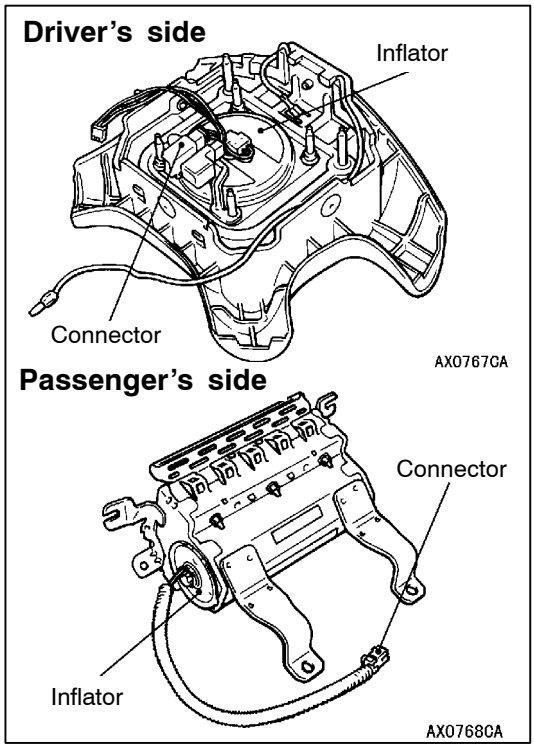


**Driver's and passenger's air bag modules**

1. Check the pad cover for dents, cracks or deformation.
2. Check the connectors for damage, the terminals for deformation, and the harness for binds.
3. Check the air bag inflator cases for dents, cracks or deformation.
4. Check the air bag modules for proper installation.

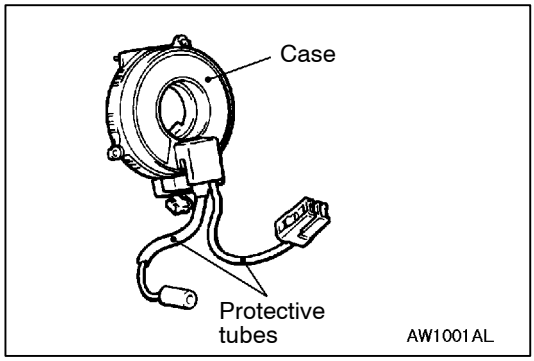


**Clock spring**

1. Check the connectors and protective tubes for damage and terminals for deformation.
2. Visually check the case for damage.

**Steering wheel, steering column and lower shaft assembly**

1. Check the driver's air bag module for proper installation to the steering wheel.
2. Check steering wheel for noise, binds or difficult operation and excessive free play.

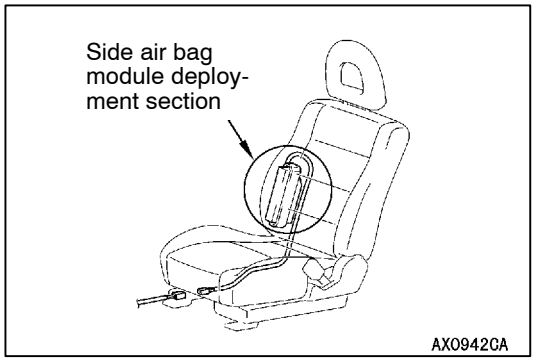


**Front seat back assembly (side air bag module)**

1. Check the side air bag module deployment section in the seat for dents and deformation.
2. Check the connectors for damage, the terminals for deformation, and the harness for binds.

Purchased from www.WorkshopManuals.co.uk

www.WorkshopManuals.co.uk

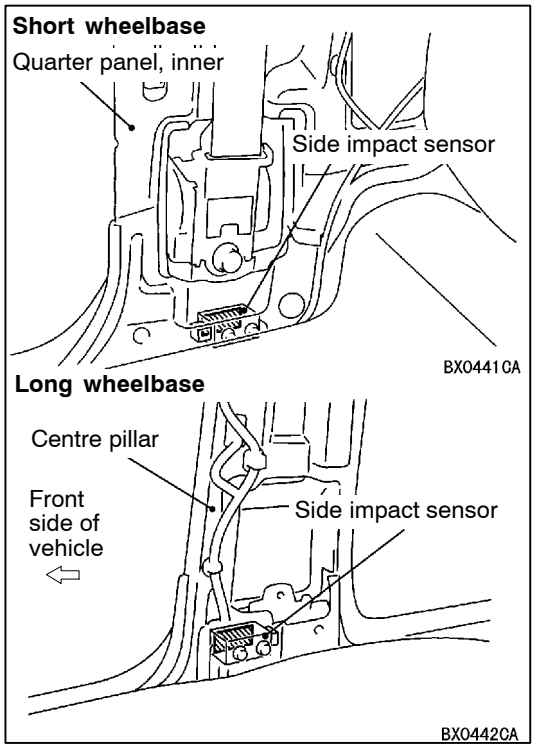


**Side impact sensor**

1. Check the center pillar <long wheelbase> or quarter panel inner <short wheelbase> for deformation or rust.
2. Check the side impact sensor for dents, cracks, deformation and rust.
3. Check connectors for damage, and terminals for deformation.

   NOTE
   The figures show side impact sensors (R.H.).The side impact sensors (L.H.) is symmetrical with the side impact sensors (R.H.).

**Harness connectors (Instrument panel wiring harness, side air bag wiring harness, floor wiring harness)**

Check harnesses for binding, connectors for damage and terminals for deformation.(Refer toP.52B-4.)

# INDIVIDUAL COMPONENT SERVICE

If the SRS components are to be removed or replaced as a result of maintenance, troubleshooting etc., follow the service procedures that follow. (P.52B-28 to 42.)

**Caution**

1. **SRS components should not be subjected to temperature over 93°C, so remove the SRS-ECU, front impact sensors, driver's and front passenger's air bag modules, clock spring, side impact sensors and front seat assemblies (side air bag modules) before drying or baking the vehicle after painting.**
2. **If the SRS components are removed for the purpose of check, sheet metal repair, painting, etc., they should be stored in a clean, dry place until they are reinstalled.**

Purchased from www.WorkshopManuals.co.uk

www.WorkshopManuals.co.uk

# WARNING/CAUTION LABELS

Caution labels on the SRS are attached in the vehicle as shown. Follow label instructions when servicing the SRS. If the label(s) are dirty or damaged, replace with new one(s).

**Steering wheel**

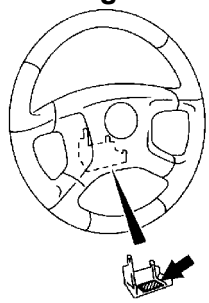

AX0433CA

**Driver's air bag module**

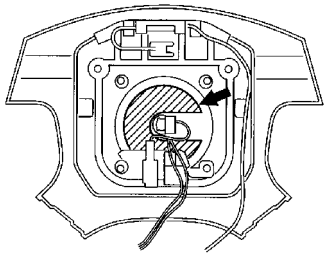

AX0434CA

**Clock spring**

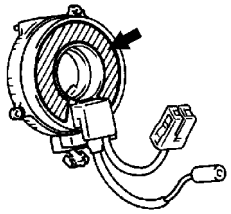

BW0963AL

**Passenger's air bag module**

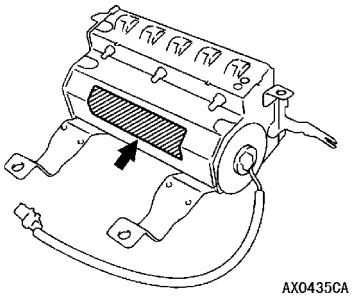

AX0435CA

**SRS-ECU**

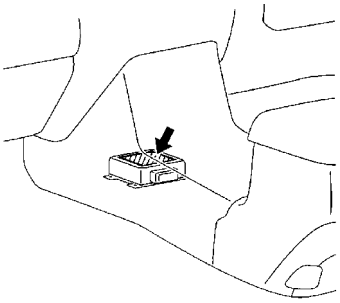

AX0436CA

**Sun visor**

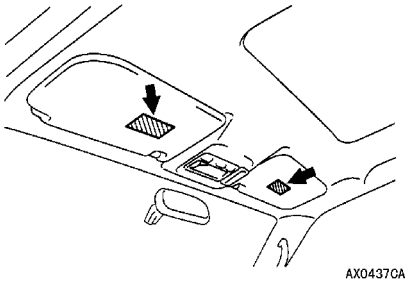

AX0437CA

**Steering gear box**

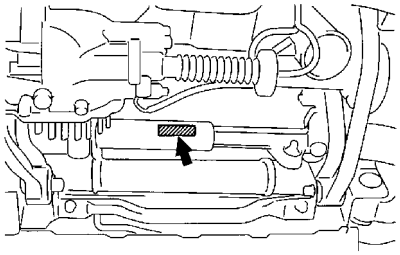

AX0438CA

**Side air bag (driver's and passenger's sides)**

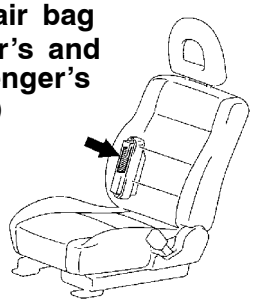

AX0439CA

**Hood**

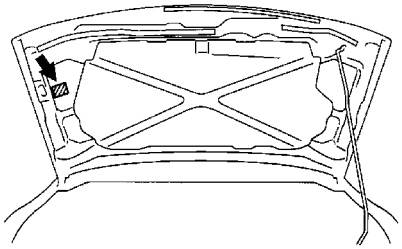

AX0440CA

**Side impact sensor**
**Short wheelbase**

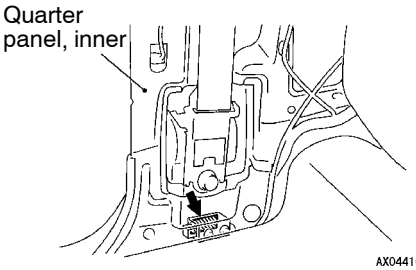


AX0441CA

**Long wheelbase**

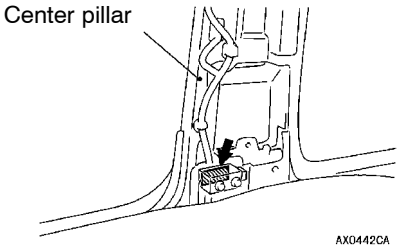


AX0442CA

**Front impact sensor**

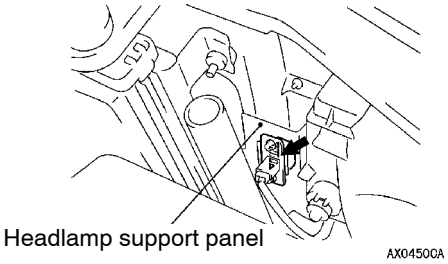


AX0450CA

**Instrument panel**

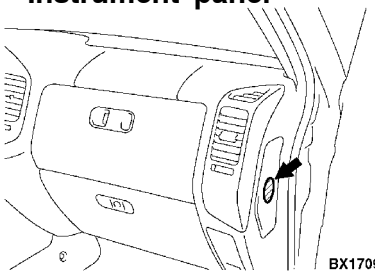

BX1709CA

**Glove box**

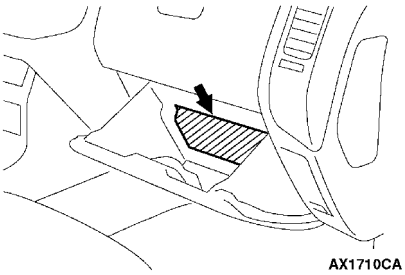

AX1710CA

Purchased from www.WorkshopManuals.co.uk

www.WorkshopManuals.co.uk

# FRONT IMPACT SENSORS

**Caution**

1. **Disconnect the battery (–) terminal and wait for 60 seconds or more before starting work. Furthermore, the disconnected battery terminal should be covered with tape to insulate it. (Refer to P.52B-4.)**
2. Never attempt to disassemble or repair the front impact sensor. If faulty, replace it.
3. Do not drop or subject the front impact sensor to impact or vibration.
   If denting, cracking, deformation, or rust are discovered in the front impact sensor, replace it with a new front impact sensor. Discard the old one.
4. After deployment of an air bag, replace the front impact sensor with a new one.

## REMOVAL AND INSTALLATION

**Pre-removal Operations**
- Turn the ignition switch to LOCK(OFF) position.
- Disconnect the negative battery (-) terminal.

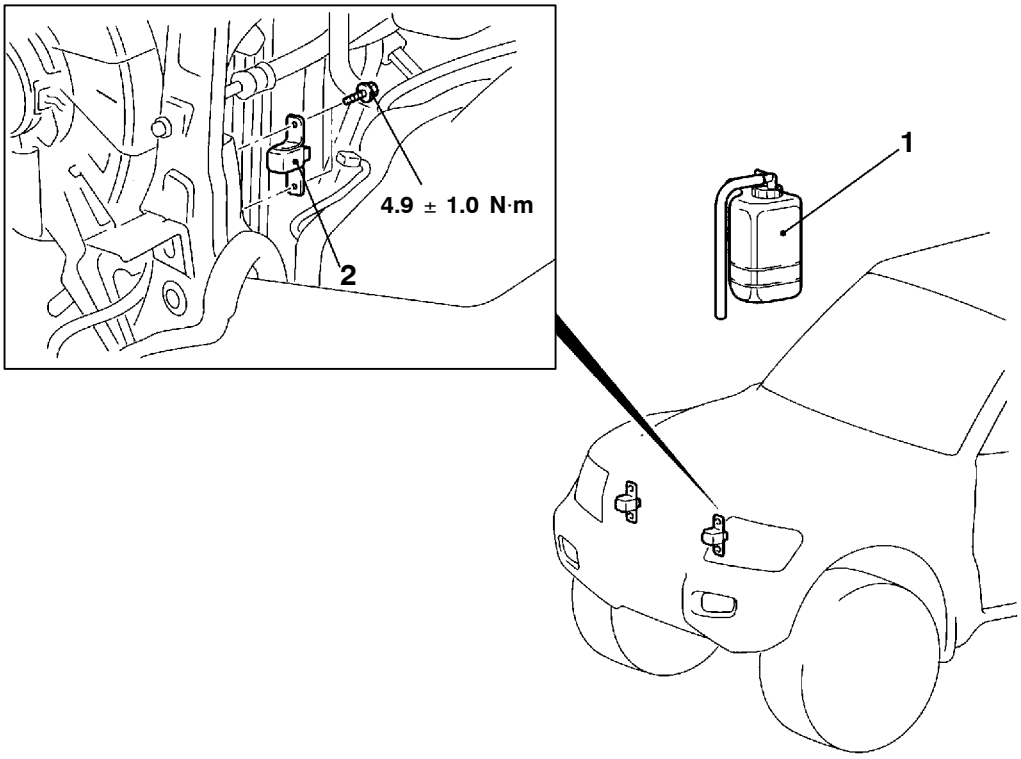


AX0773CA

**Removal steps**

1. Condense tank
2. Front impact sensor

**Installation steps**

▶A◀ ● Pre-installation inspection
▶B◀ 2. Front impact sensor
1. Condense tank
● Connect the negative (-) battery terminal.
▶C◀ ● Post-installation inspection

NOTE
The figure shows the front impact sensor (L.H.).

Purchased from www.WorkshopManuals.co.uk

www.WorkshopManuals.co.uk

## INSTALLATION SERVICE POINTS

### ▶A◀ PRE-INSTALLATION INSPECTION

To mount the new front impact sensor, visually check it and measure the resistance between the terminals.(Refer to the previous item “INSPECTION”.)

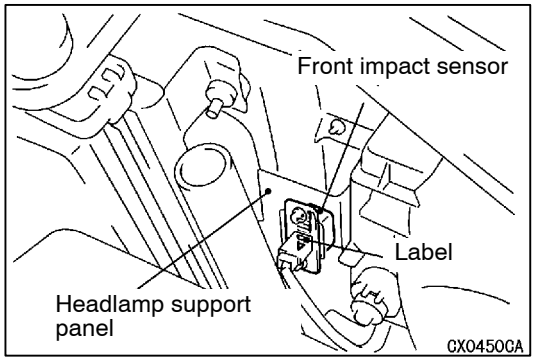


### ▶B◀ FRONT IMPACT SENSOR INSTALLATION

1. Securely connect the connector.
2. Position the front impact sensor facing toward the front of the vehicle as shown by the arrow on the label and install it securely.

   **Caution**
   **The SRS may not activate properly if a front impact sensor is not installed properly.**

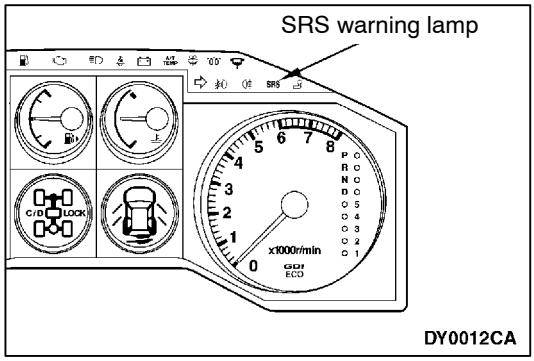


### ▶C◀ POST-INSTALLATION INSPECTION

1. Turn the ignition key to the ON position.
2. Does the SRS warning lamp illuminate for about 7 seconds, and then remain extinguished for at least 5 seconds after turning OFF?
3. If no, refer to troubleshooting.
   (Refer to P.52B-7)

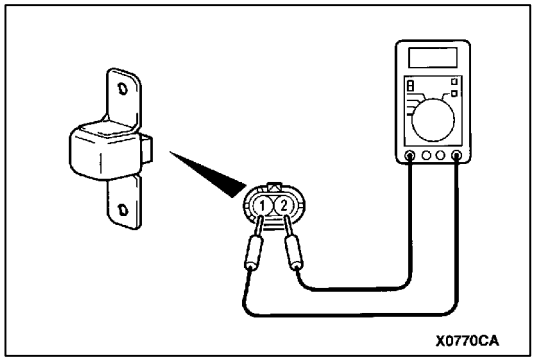


## INSPECTION

1. Check the front impact sensor for dents, cracks, deformation or rust.

   **Caution**
   **If a dent, crack, deformation or rust is found, replace the sensor with a new one.**
2. Check short or open circuit between the terminals of the front impact sensor.

   **Short circuit: 1 Ω or less**
   **Open circuit: 1 MΩ or more**

   **Caution**
   **Always replace the sensor with a new one if the resistance shows a short or open circuit.**
3. Check the continuity between the terminal and bracket. If there is a continuity, the insulation is malfunctioned, and replace the sensor with a new one.
4. Check the headlamp support panel for deformation and rust.

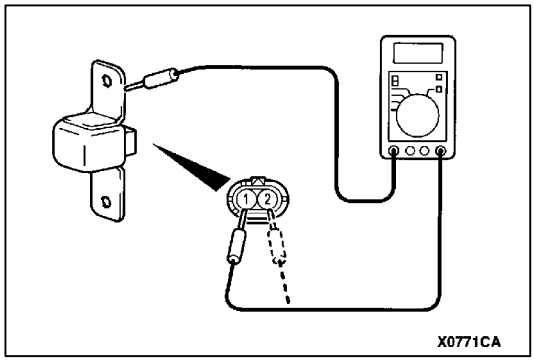


Purchased from www.WorkshopManuals.co.uk

www.WorkshopManuals.co.uk

# SRS AIR BAG CONTROL UNIT (SRS-ECU)

**Caution**

1. **Disconnect the negative (–) battery terminal and wait for 60 seconds or more before starting work. Also, the disconnected battery terminal should be insulated with tape. (Refer to P.52B-4.)**
2. **Never attempt to disassemble or repair the SRS-ECU. If faulty, just replace with a new one.**
3. **Do not drop or subject the SRS-ECU to impact or vibration.**
   **If denting, cracking, deformation, or rust are found in the SRS-ECU, replace it with a new one. Discard the old one.**
4. **After deployment of the air bags, replace the SRS-ECU with a new one.**
5. **Never use an ohmmeter on or near the SRS-ECU, and use only the special test equipment described on P.52B-7.**

## REMOVAL AND INSTALLATION

**Pre-removal Operations**
- Turn the ignition switch to LOCK(OFF) position.
- Disconnect the negative battery (-) terminal.

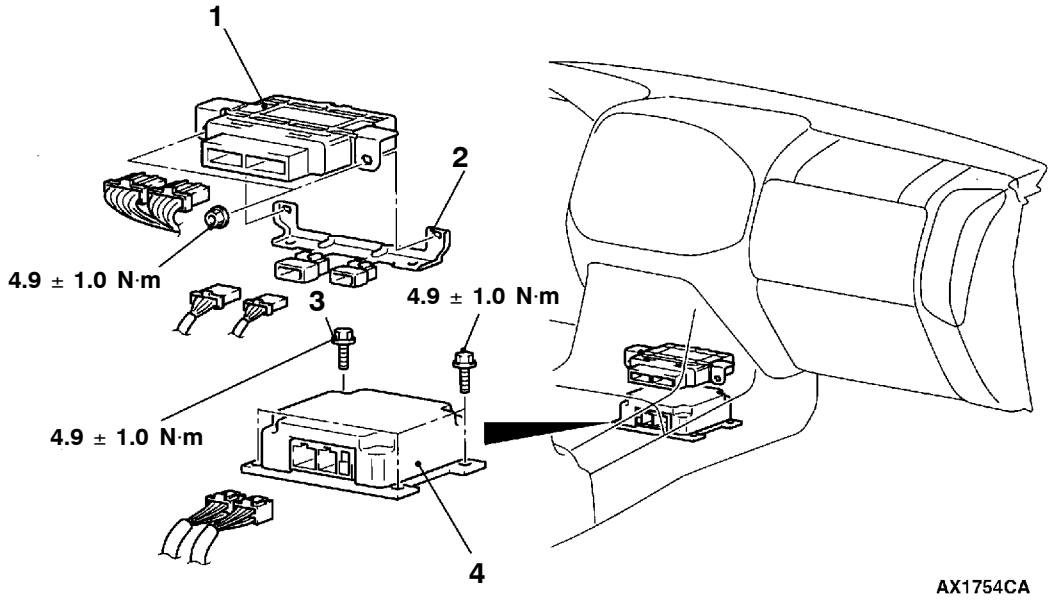


**Removal steps**
- Front floor console (Refer to GROUP 52A.)

1. Transfer-ECU
2. Connector bracket
3. SRS-ECU mounting bolts (earth bolt)
4. SRS-ECU

**Installation steps**

▶A◀ 4. SRS-ECU
▶B◀ 3. SRS-ECU mounting bolts (earth bolt)
2. Connector bracket
1. Transfer-ECU
- Front floor console (Refer to GROUP 52A.)
- Connect the negative (-) battery terminal.

▶C◀ • Post-installation inspection

Purchased from www.WorkshopManuals.co.uk

www.WorkshopManuals.co.uk

## INSTALLATION SERVICE POINTS

### ▶A◀ SRS-ECU INSTALLATION

**Caution**
**The SRS may not activate if SRS-ECU is not installed properly.**

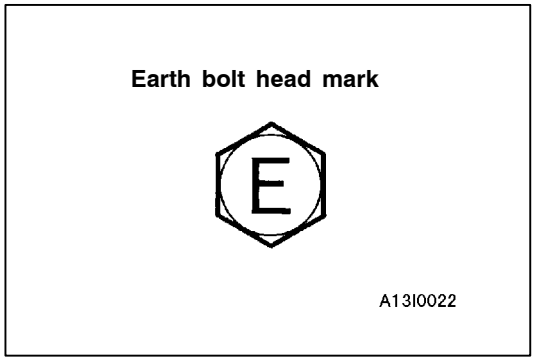


### ▶B◀ SRS-ECU MOUNTING BOLT (EARTH BOLT) INSTALLATION

Before installation, check that the bolt is stamped mark “E” on the head.

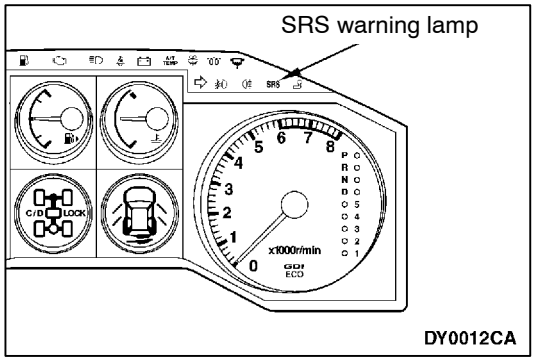


### ▶C◀ POST-INSTALLATION INSPECTION

1. Turn the ignition key to the ON position.
2. Does the SRS warning lamp illuminate for about 7 seconds, and then remain extinguished for at least 5 seconds after turning OFF?
3. If no, refer to troubleshooting.
   (Refer to P.52B-7)

## INSPECTION

1. Check the SRS-ECU case for dents, cracks or deformation.
2. Check connector for damage, and terminals for deformation.

   **Caution**
   **If any problems are found, replace the SRS-ECU.**

   NOTE
   For the checks other than the items above, refer to “Troubleshooting.”(Refer to P.52B-7.)

Purchased from www.WorkshopManuals.co.uk

www.WorkshopManuals.co.uk

# AIR BAG MODULES AND CLOCK SPRING

**Caution**

1. Disconnect the negative (–) battery terminal and wait for 60 seconds or more before starting work. Also, the disconnected battery terminal should be insulated with tape. (Refer to P.52B-4.)
2. Never attempt to disassemble or repair the air bag modules and clock spring.
   If faulty, just replace with new one(s).
3. Do not drop the air bag modules or clock spring or allow contact with water, grease or oil.
   Replace if a dent, crack, deformation or rust are present.
4. Store the air bag modules on a flat surface with the deployment surface facing up.
   Do not place anything on top of them.
5. Do not store the air bag modules in a place more than 93°C.
6. When the driver's and front passenger's air bags have been deployed, replace the driver's and passenger's air bag modules with new ones.
7. Put on gloves and safety glasses when handling deployed air bags.
8. When discarding the undeployed air bag module(s), be sure to deploy the air bag(s) in advance as specified in the service procedure.
   (Refer to to P.52B-43.)

Purchased from www.WorkshopManuals.co.uk

www.WorkshopManuals.co.uk

## REMOVAL AND INSTALLATION

**Pre-removal Operations**
- After setting the steering wheel and the front wheels to the straight ahead position, remove the ignition key.
- Disconnect the negative battery (-) terminal.

### <Driver's air bag module and clock spring>

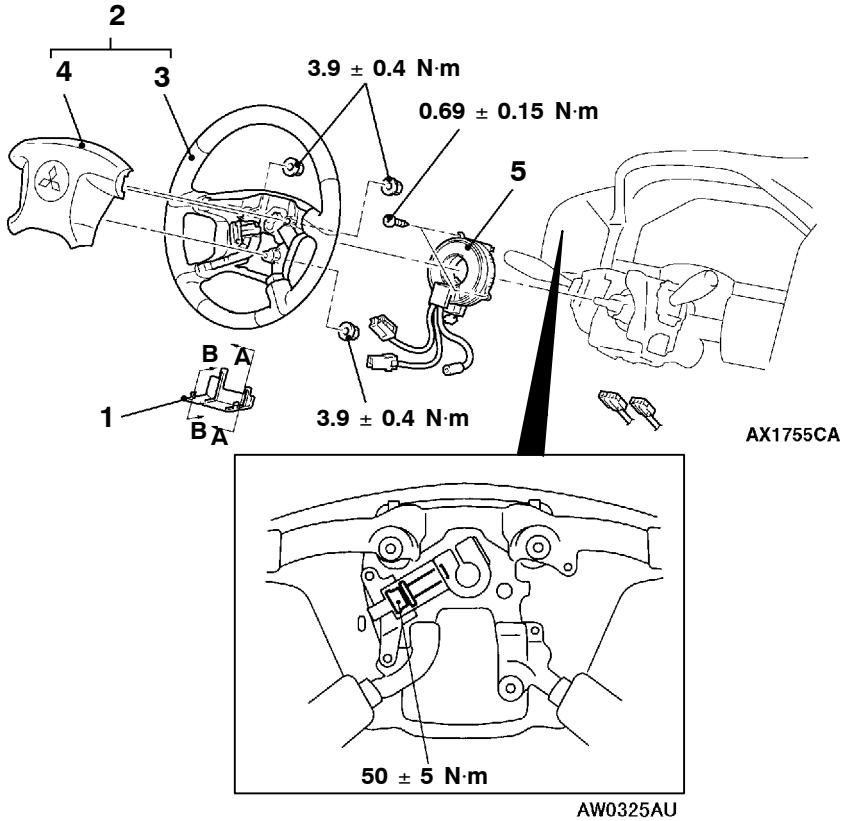


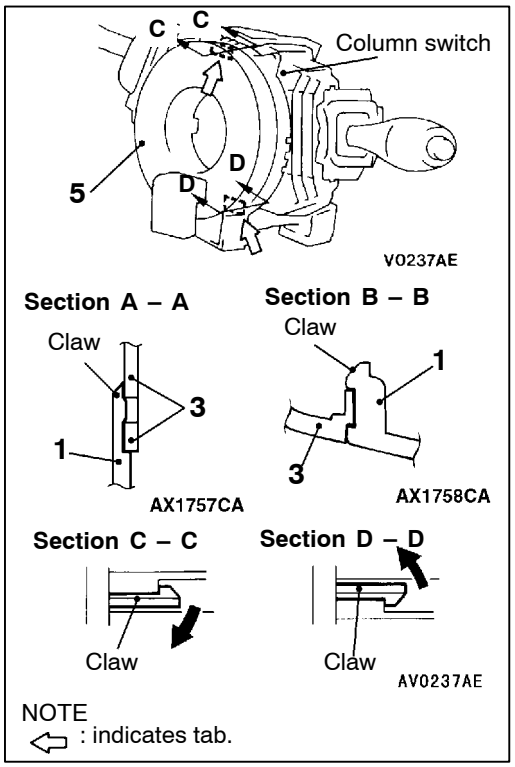


**Driver's air bag module removal steps**

◀A▶ 1. Cover
◀B▶ 2. Steering wheel and air bag module assembly
3. Steering wheel
◀C▶ 4. Driver's air bag module

**Driver's air bag module installation steps**

▶A◀ ● Pre-installation inspection
4. Driver's air bag module
3. Steering wheel
▶C◀ 2. Steering wheel and air bag module assembly
1. Cover
● Connect the negative (-) battery terminal.
▶D◀ ● Post-installation inspection

**Clock spring removal steps**

◀A▶ 1. Cover
◀B▶ 2. Steering wheel and air bag module assembly
● Lower column cover
◀D▶ 5. Clock spring

**Clock spring installation steps**

▶A◀ ● Pre-installation inspection
▶B◀ 5. Clock spring
● Lower column cover
▶C◀ 2. Steering wheel and air bag module assembly
1. Cover
● Connect the negative (-) battery terminal.
▶D◀ ● Post-installation inspection

Purchased from www.WorkshopManuals.co.uk

www.WorkshopManuals.co.uk

**<Passenger's air bag module>**

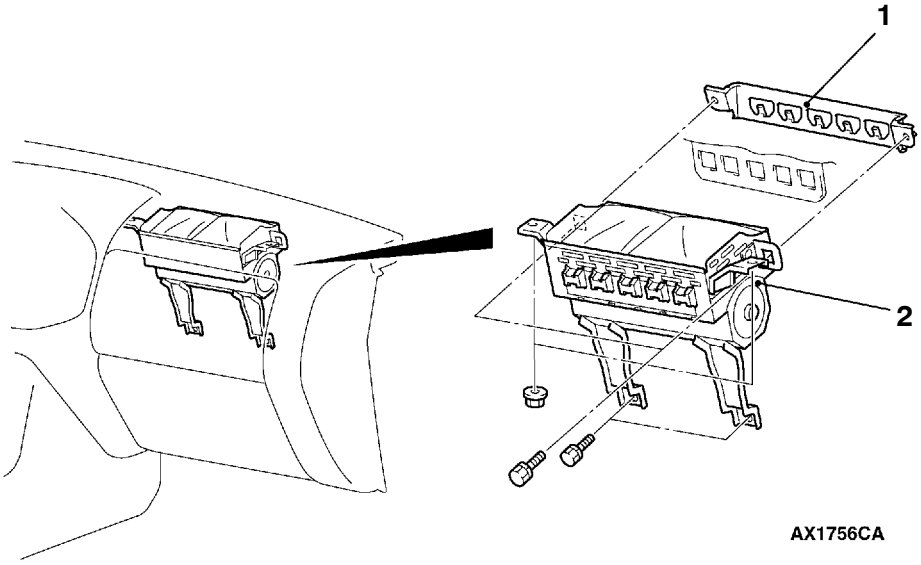


**Removal steps**

- Upper glove box (Refer to GROUP 52A - Instrument Panel.)
- Glove box (Refer to GROUP 52A - Instrument Panel.)

◀E▶ 1. Air bag side plate

◀F▶ 2. Passenger's air bag module

**Installation steps**

▶A◀ ● Pre-installation inspection

2. Passenger's air bag module

1. Air bag side plate

- Glove box (Refer to GROUP 52A - Instrument Panel.)
- Upper glove box (Refer to GROUP 52A - Instrument Panel.)
- Connect the negative (-) battery terminal.

▶D◀ ● Post-installation inspection

Purchased from www.WorkshopManuals.co.uk

www.WorkshopManuals.co.uk

**<Front seatback assembly equipped with side air bag module>**

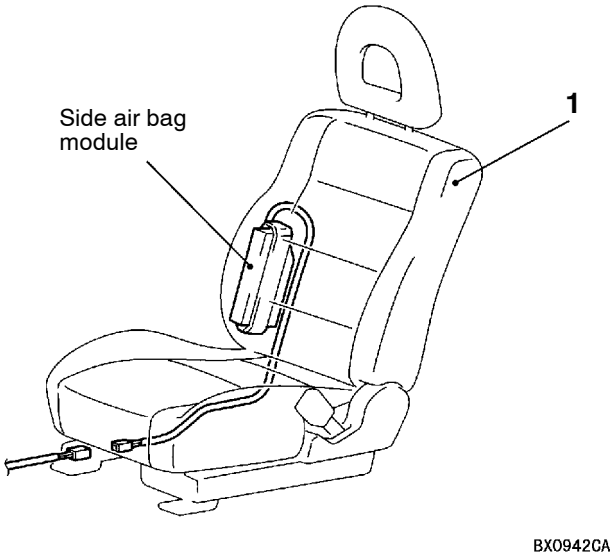


**Removal steps**

◀G▶ 1. Front seat back assembly

**Installation steps**

▶A◀ ● Pre-installation inspection
1. Front seat back assembly
● Connect the negative (-) battery terminal.
▶D◀ ● Post-installation inspection

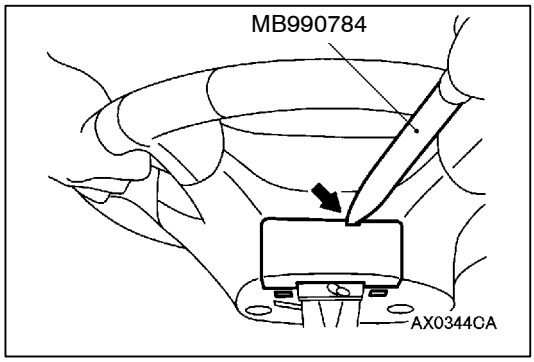


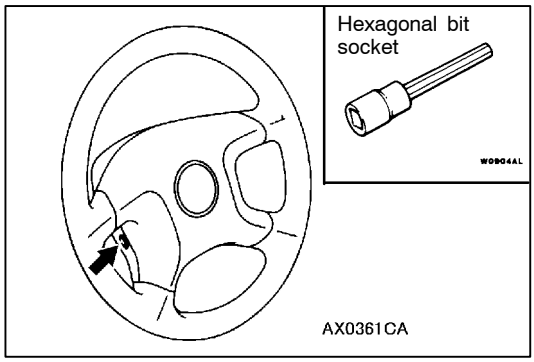


## REMOVAL SERVICE POINTS

### ◀A▶ COVER REMOVAL

Insert the special tool as shown in the illustration to remove the cover.

NOTE
The arrow in the illustration shows the notch for the special tool.

### ◀B▶ STEERING WHEEL AND AIR BAG MODULE ASSEMBLY REMOVAL

1. Remove the air bag module and disconnect the horn switch connector through space produced after the removal of the steering wheel.
2. Loosen the bolt completely and then remove the steering wheel assembly.

   NOTE
   Use a hexagonal bit socket or a hexagonal wrench having an effective length of 75 mm or more in the hexagonal section and the diameter of 8 mm or more.

Purchased from www.WorkshopManuals.co.uk

www.WorkshopManuals.co.uk

### ◀C▶ DRIVER'S AIR BAG MODULE REMOVAL

**Caution**

1. **The air bag module must not be measured with such equipment as an ohmmeter, nor disassembled.**
2. **The removed air bag module should be stored in a clean, dry place with the deployment surface facing up.**

### ◀D▶ CLOCK SPRING REMOVAL

**Caution**

**The removed clock spring should be stored in a clean, dry place.**

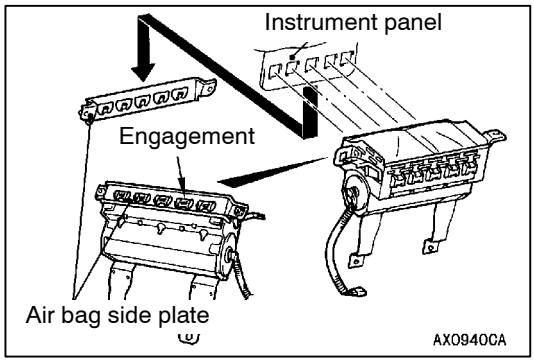


### ◀E▶ AIR BAG SIDE PLATE REMOVAL

1. Remove the air bag side plate mounting bolt and slide downward the air bag side plate and then disengage it from the the passenger's air bag module.
2. After removal of the passenger's air bag module mounting bolt and nut, move the passenger's air bag aside and remove the air bag side plate.

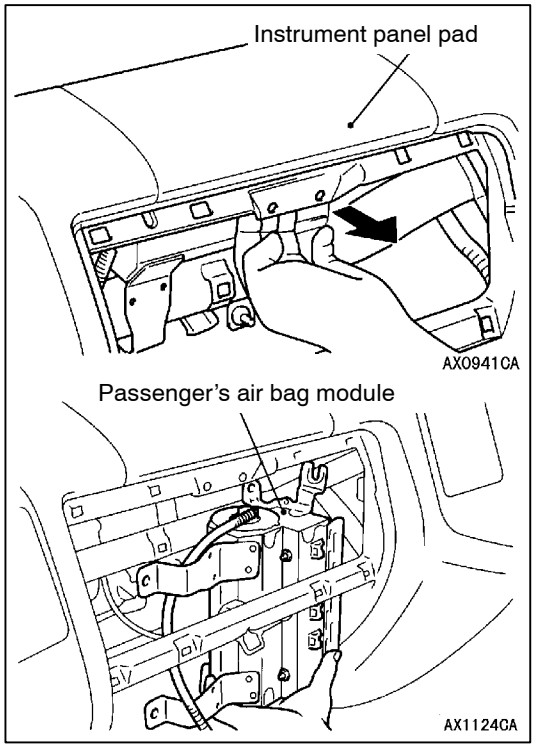


### ◀F▶ PASSENGER'S AIR BAG MODULE REMOVAL

While the instrument panel pad as shown in the illustration is pulled forward, remove the air bag module and pull it out from the down side.

**Caution**

**The removed passenger's air bag module should be stored in a clean, dry place with facing the deployment surface facing up.**

Purchased from www.WorkshopManuals.co.uk

www.WorkshopManuals.co.uk

### ◀G▶ FRONT SEATBACK ASSEMBLY REMOVAL

(Refer to GROUP 52A - Seat.)

**Caution**

1. **When the side air bag module is required replacing, replace the front seat back assembly.**
2. **The removed front seat back assembly should be stored in clean, dry place with its back touching the ground.**

## INSTALLATION SERVICE POINTS

### ▶A◀ PRE-INSTALLATION INSPECTION

1. Even new air bag modules, clock spring and front seat back assembly require inspection before installation. (Refer to P.52B-38.)

   **Caution**
   **When discarding the air bag module or seat back assembly, deploy the air bag as specified in the service procedure. (Refer to P.52B-43.)**

2. Connect the negative (-) battery terminal.
3. Connect the MUT-II to the diagnosis connector (16 pin) .

   **Caution**
   **Turn the ignition switch to the LOCK (OFF) position when connecting and disconnecting the MUT-II.**

4. Turn the ignition key to the ON position.
5. Read a diagnostic code to refer to that the SRS is operating properly except an open in the air bag module circuit.
6. Turn the ignition switch to LOCK(OFF) position.
7. Disconnect the negative (-) battery cable and insulate with tape.

   **Caution**
   **Wait at least 60 seconds after the disconnection of the battery cable before any further job.**
   **(Refer to P.52B-4, item 5 of the Service Precautions)**

### ▶B◀ CLOCK SPRING INSTALLATION

Align the mating marks on the clock spring as mentioned in the next step. Then, install the clock spring to the column switch.

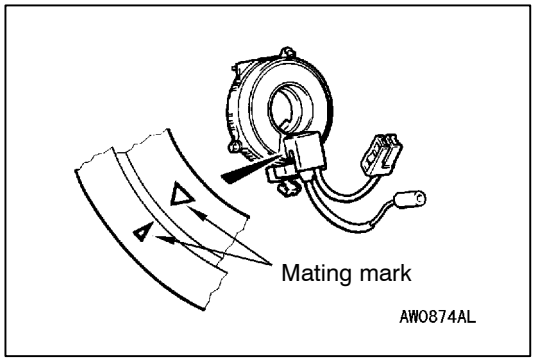


### CLOCK SPRING CENTERING

Fully turn the clock spring clockwise and then turn it back about 3 times counterclockwise to align the mating marks.

**Caution**
**Unless the mating marks are properly aligned, the steering wheel gets stuck amid a turn or the flat cable in the clock spring is cut. These hinder the SRS air bag from proper operation, resulting in serious injury to the vehicle's driver.**

Purchased from www.WorkshopManuals.co.uk

www.WorkshopManuals.co.uk

### ▶C◀ STEERING WHEEL AND AIR BAG MODULE ASSEMBLY INSTALLATION

1. Refer to first that the clock spring has been centered properly. Then, install the steering wheel.

   **Caution**
   **Be sure when installing the steering wheel, that the harness of the clock spring does not become caught or tangled.**

2. After clamping, turn the steering wheel all the way in both directions to confirm that steering is normal.

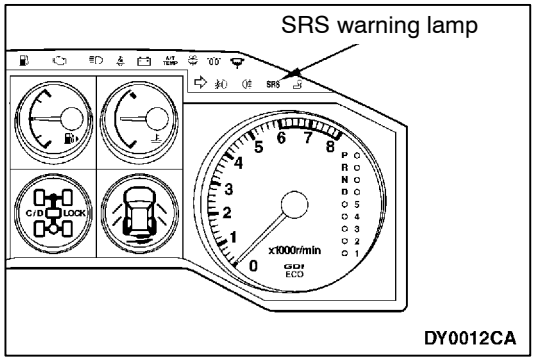


### ▶D◀ POST-INSTALLATION INSPECTION

1. When the driver's airbag module or the clock spring is installed, turn the steering wheel clockwise and counterclockwise slowly to confirm that there is no noise or improper operation.
2. Turn the ignition key to the ON position.
3. Does the SRS warning lamp illuminate for about 7 seconds, and then remain extinguished for at least 5 seconds after turning OFF?
4. If no, refer to troubleshooting.
   (Refer to P.52B-7)

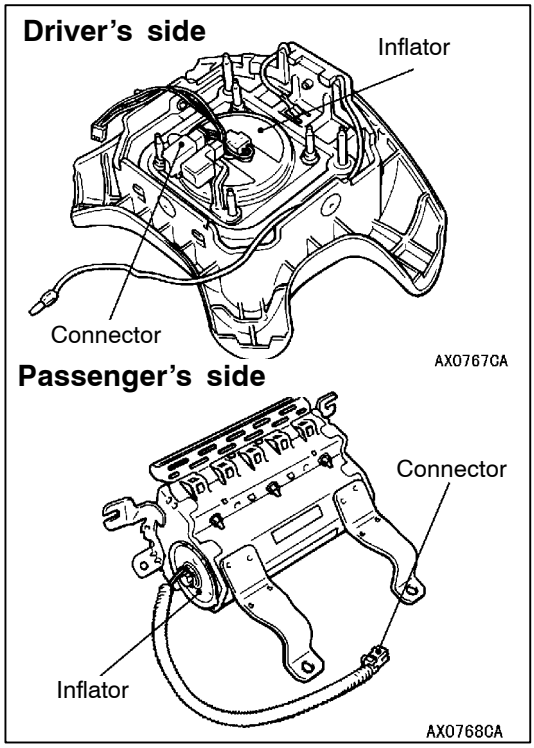


## INSPECTION

### Driver's and passenger's air bag module

If any malfunction is found in the following inspection, replace the air bag module(s) with new one(s).
Discard the old one(s) after deployment as specified in the service procedure. (Refer to P.52B-43.)

**Caution**
**Never measure circuit resistance in the air bag modules (squib) even with the specified tester. Measuring the circuit resistance with a tester causes accidental air bag deployment due to current that flows or static, resulting in serious personal injury.**

1. Check the cover for dents, cracks or deformation.
2. Check the harness and connector for damage and the terminals for deformation.
3. Check the air bag inflator cases for dents, cracks or deformation.
4. Check the air bag module for proper installation.

**Caution**
**If a dent, crack or deformation is detected, replace with a new sensor. Discard the old one(s) as specified in the service procedure.**
**(Refer to P.52B-43.)**

Purchased from www.WorkshopManuals.co.uk

www.WorkshopManuals.co.uk

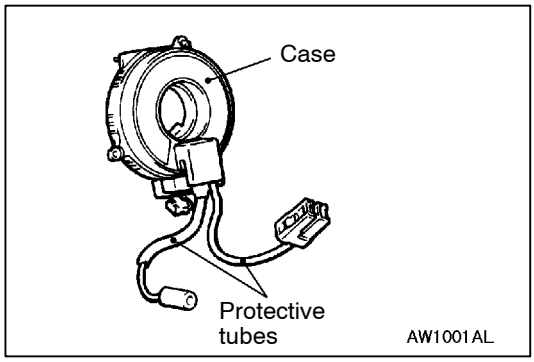


## Clock spring

If any malfunction is found in the following inspections, replace the clock spring with a new one.

1. Check the connectors and protective tubes for damage, and terminals for deformation.
2. Visually check the case for damage.

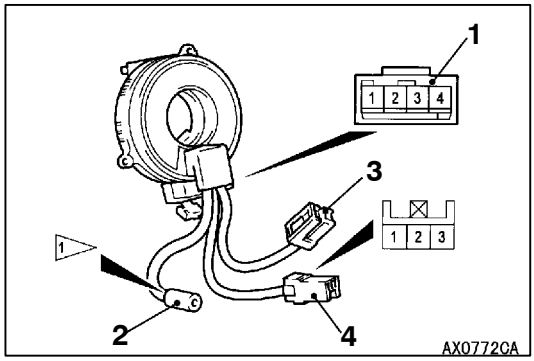


3. Refer to that the clock spring has continuity between connectors No.1, No.2, No.4 <vehicles with auto-cruise control>.

| Connector No. | 1 | | | | 2 | 4 | | |
|---|---|---|---|---|---|---|---|---|
| Terminal No. | 1 | 2 | 3 | 4 | 1 | 1 | 2 | 3 |
| Continuity | ○ | | | | | ○ | | |
| | | ○ | | | | | | ○ |
| | | | ○ | | | | ○ | |
| | | | | ○ | ○ | | | |

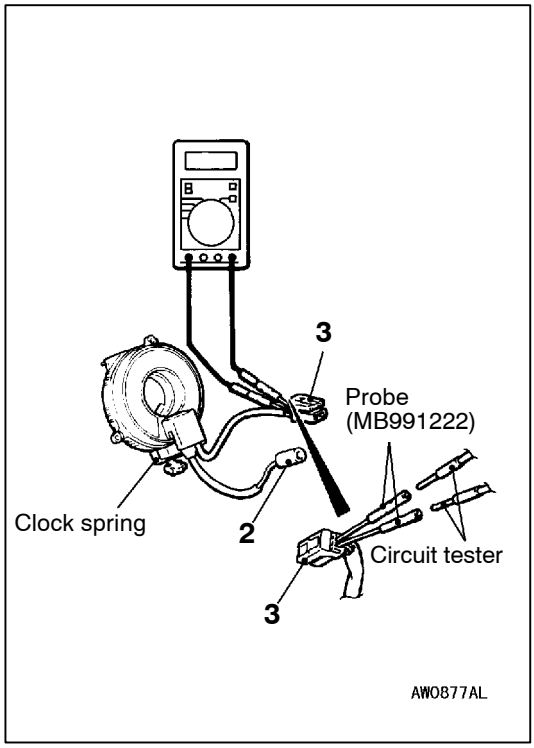


4. Insert the probes (MB991222) from the rear of the clock spring No.3 connector.
   **Caution**
   **Never insert the probe directly to the terminals from the front of the connector.**
5. Connect a digital multimeter to the probe (MB991222) as shown, to check that the resistance is 1 Ω or less. Also, check that there is a open circuit.

   **Open circuit: 1 MΩ or more**

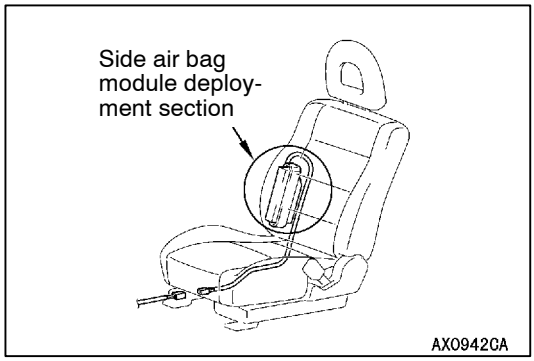


## Front seat back assembly equipped with side air bag module

If any malfunction is found in the following inspections, replace the front seat back assembly.
To discard the removed front seat back assembly, deploy the side air bag first as specified in the service procedure. (Refer to P.52B-43.)

Purchased from www.WorkshopManuals.co.uk

www.WorkshopManuals.co.uk

**Caution**
**Never measure circuit resistance in the side air bag modules (squib) even with the specified tester. Measuring the circuit resistance with a tester causes accidental air bag deployment due to current that flows or static, resulting in serious personal injury.**

1. Check the side air bag module deployment section for dents and deformation.
2. Check the harness and connector for damage and the terminals for deformation.

Purchased from www.WorkshopManuals.co.uk

www.WorkshopManuals.co.uk

# SIDE IMPACT SENSOR

**Caution**

1. **Disconnect the negative (–) battery terminal and wait for 60 seconds or more before starting work. Also, the disconnected battery terminal should be insulated with tape. (Refer to P.52B-4.)**
2. **Never attempt to disassemble or repair the side impact sensors. If faulty, just replace with new ones.**
3. **Do not drop or subject the side impact sensors to impact or vibration.**
   **If denting, cracking, deformation, or rust are found in the side impact sensors, replace it with new ones. Discard the old ones.**
4. **After deployment of the air bags, replace the side impact sensors with new ones.**
5. **Never use an ohmmeter on or near the side impact sensors, and use only the special test equipment described on P.52B-7.**

## REMOVAL AND INSTALLATION

**Pre-removal Operations**
- Turn the ignition switch to LOCK(OFF) position.
- Disconnect the negative battery (-) terminal.

**Short wheelbase**

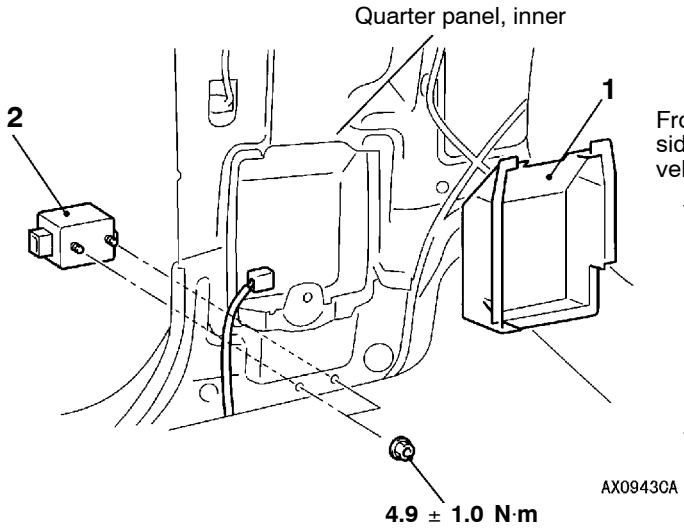


**Long wheelbase**

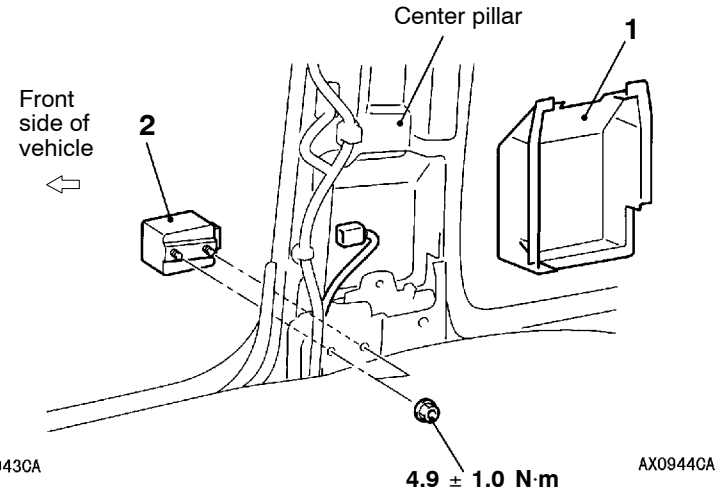


**Removal steps**
- Front seat belt (Refer to GROUP 52A.)

1. Front noise protector
2. Side impact sensor

**Installation steps**

▶A◀ ● Pre-installation inspection
▶B◀ 2. Side impact sensor
1. Front noise protector
- Front seat belt (Refer to GROUP 52A.)
- Connect the negative (-) battery terminal.

▶C◀ ● Post-installation inspection

NOTE
The figure shows the side impact sensor (R.H.).

Purchased from www.WorkshopManuals.co.uk

www.WorkshopManuals.co.uk

## INSTALLATION SERVICE POINTS

### ▶A◀ PRE-INSTALLATION INSPECTION

Even new side impact sensor requires inspection before installation. (Refer to the previous item “INSPECTION”.)

### ▶B◀ SIDE IMPACT SENSOR INSTALLATION

**Caution**
**The side impact sensor, unless properly installed, does not operate properly, thereby resulting in serious injury or death of the vehicle’s occupants.**

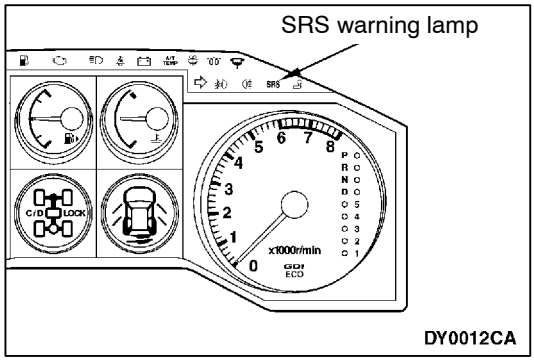


### ▶C◀ POST-INSTALLATION INSPECTION

1. Turn the ignition key to the ON position.
2. Does the SRS warning lamp illuminate for about 7 seconds, and then remain extinguished for at least 5 seconds after turning OFF?
3. If no, refer to troubleshooting.
   (Refer to P.52B-7)

## INSPECTION

1. Check the side impact sensor for dents, cracks, deformation and rust.
2. Check connector for damage, and terminals for deformation.
3. Check the center pillar or quarter panel, inner for deformation and rust.

   **Caution**
   **If a dent, crack, deformation or rust is found, replace the sensor with a new one.**

   NOTE
   For other inspections than described above, go to Troubleshooting. (Refer to P.52B-7.)

Purchased from www.WorkshopManuals.co.uk

www.WorkshopManuals.co.uk

# AIR BAG MODULE DISPOSAL PROCEDURES

When discarding the air bag modules or a vehicle with SRS air bags, be sure to deploy the air bags in advance as specified in the service procedure that follows.

## UNDEPLOYED AIR BAG MODULES

**Caution**

1. **If the vehicle is to be scrapped or otherwise disposed of, deploy the air bags inside the vehicle. If the vehicle is still to be used and only the air bag modules are to be discarded, deploy the air bags outside the vehicle.**
2. **Since a large amount of smoke is produced when the air bags are deployed, avoid residential areas whenever possible.**
3. **Since there is substantial report when the air bags are deployed, avoid residential areas whenever possible. If anyone is nearby, give warning of the impending noise.**
4. **Suitable ear protection must be put on by personnel performing these procedures or by people in the immediate area.**

### DEPLOYMENT INSIDE THE VEHICLE

1. Move the vehicle to flat and isolated spot.
2. Disconnect the negative (–) and positive (+) battery cables from the battery terminals, and then remove the battery from the vehicle.

   **Caution**
   **Wait at least 60 seconds after the disconnection of the battery cables before any further job.**
   **(Refer to P.52B-4.)**

3. Deploy each air bag module as specified in the service procedures that follow.

   **Driver's air bag module**
   (1) Remove the steering column cover, lower.
   (Refer to GROUP 52A - Instrument Panel.)
   (2) Disconnect the clock spring 2-pin connector and instrument panel wiring harness connector (2-pin, yellow).

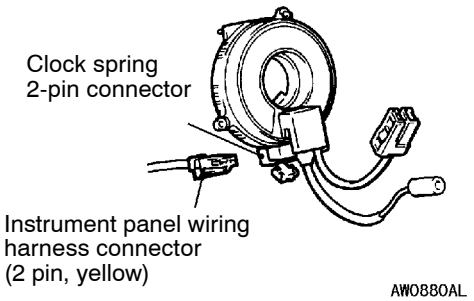


Purchased from www.WorkshopManuals.co.uk

www.WorkshopManuals.co.uk

NOTE
Once disconnected from the instrument panel wiring harness, both electrodes of the clock spring connector short automatically. This prevents the driver's air bag from accidental deployment caused by static, etc.

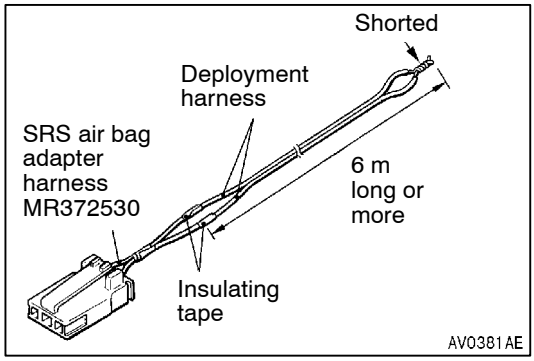


(3) Connect deployment harnesses longer than 6 m to each SRS air bag adapter harness and insulate the connections with plastic tape.
Also, connect the deployment harnesses in the other ends to short, thereby preventing the driver's air bag from accidental deployment caused by static etc.

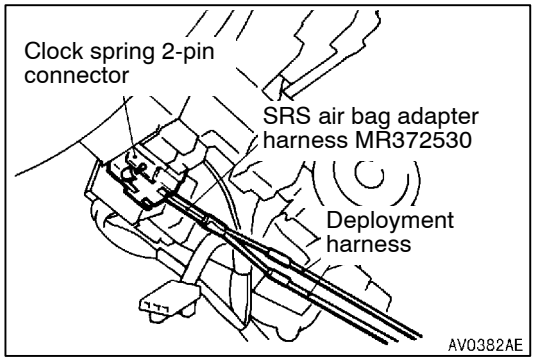


(4) Connect the SRS air bag adapter harness to the clock spring 2-pin connector and route the deployment harnesses out of the vehicle.

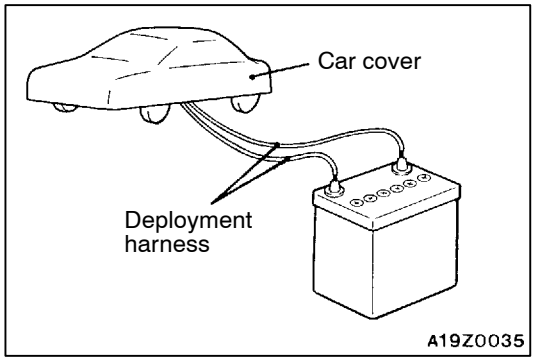


(5) Close all the doors with the windows fully closed and put a cover over the vehicle to minimize report.

**Caution**
**The cover is required as the glass, if already damaged, may break.**

(6) Separate the deployment harnesses as far from the vehicle as possible and connect to the terminals of the battery removed from the vehicle. Then deploy the passenger's air bag module.

**Caution**
1) **Before deploying the air bag, see that no one is in and near the vehicle.**
2) **The deployment makes the inflator of the driver's air bag very hot. Before handling the inflator, wait more than 30 minutes for cooling.**
3) **If the air bag module fails to deploy although the procedure is respected, do not go near the module. Contact your distributor.**

(7) After deployment of the air bag module, discard as specified in the procedure. (Refer to P.52B-52)

Purchased from www.WorkshopManuals.co.uk

www.WorkshopManuals.co.uk

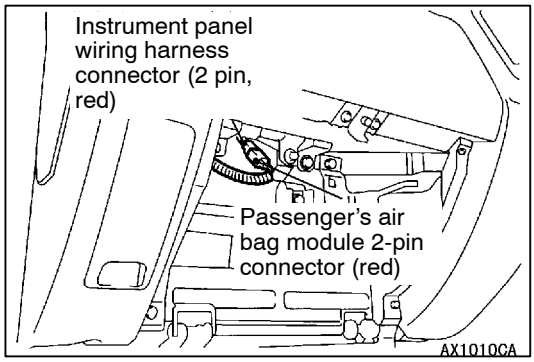


**Passenger's air bag module**

(1) Remove the glove box.
(Refer to GROUP 52A - Instrument Panel.)

(2) Disconnect the front passenger's air bag module 2-pin connector (red) and instrument panel wiring harness connector (2-pin, red).

NOTE
Once disconnected from the instrument panel wiring harness, both electrodes of the passenger's air bag module short automatically. This prevents the passenger's air bag from accidental deployment caused by static, etc.

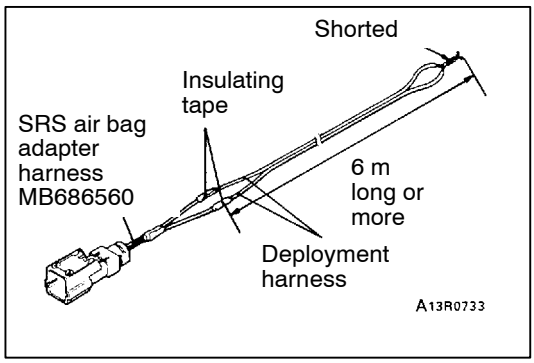


(3) Connect deployment harnesses longer than 6 m to each SRS air bag adapter harness and insulate the connections with plastic tape.
Also, connect the deployment harnesses in the other ends to short, thereby preventing the passenger's air bag from accidental deployment caused by static etc.

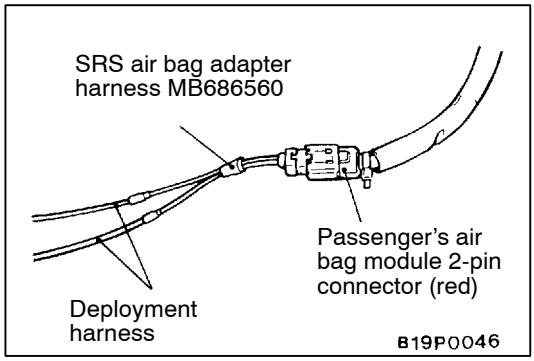


(4) Connect the SRS air bag adapter harness to the passenger's air bag module 2-pin (red) connector and route the deployment harnesses out of the vehicle.

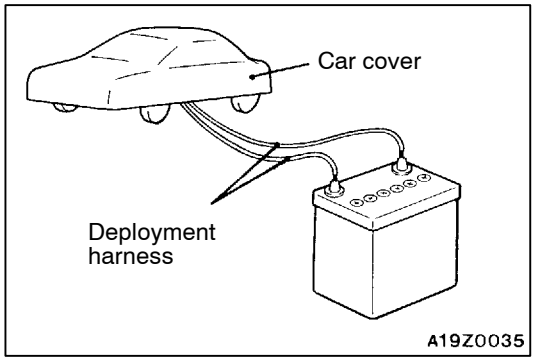


(5) Close all the doors with the windows fully closed and put a cover over the vehicle to minimize report.

**Caution**
**The cover is required as the glass, if already damaged, may break.**

(6) Separate the deployment harnesses as far from the vehicle as possible and connect to the terminals of the battery removed from the vehicle. Then deploy the passenger's air bag module.

**Caution**
**1) Before deploying the air bag, see that no one is in and near the vehicle.**
**2) The deployment makes the inflator of the passenger's air bag very hot. Before handling the inflator, wait more than 30 minutes for cooling.**
**3) If the air bag module fails to deploy although the procedure is respected, do not go near the module. Contact your local distributor.**

(7) After deployment of the air bag module, discard as specified in the procedure. (Refer to P.52B-52)

Purchased from www.WorkshopManuals.co.uk

www.WorkshopManuals.co.uk

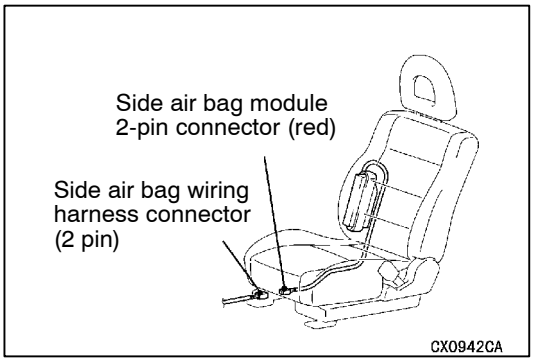


**Side air bag module**

(1) Disconnect the side airbag module 2-pin connector (red) and side airbag wiring harness connector(2-pin).

**Caution**
**The side air bag modules both in the driver's and passenger's sides should be deployed.**

NOTE
Once disconnected from the side air bag wiring harness, both electrode of the side air bag module connector short automatically. This prevents the side air bag from accidental deployment caused by static etc.

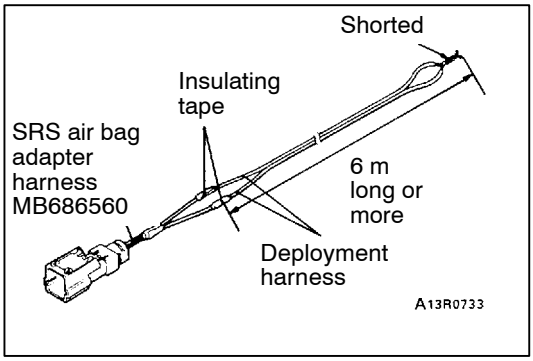


(2) Connect deployment harnesses longer than 6 m to each SRS air bag adapter harness and insulate the connections with plastic tape.
Also, connect the deployment harnesses in the other ends to short, thereby preventing the side air bag from accidental deployment caused by static etc.

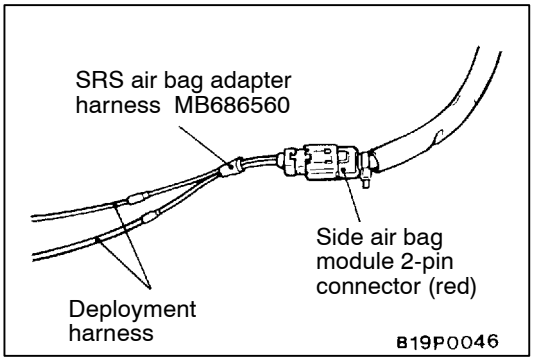


(3) Connect the SRS air bag adapter harness to the side air bag module 2-pin connector (red) and route the deployment harness out of the vehicle.

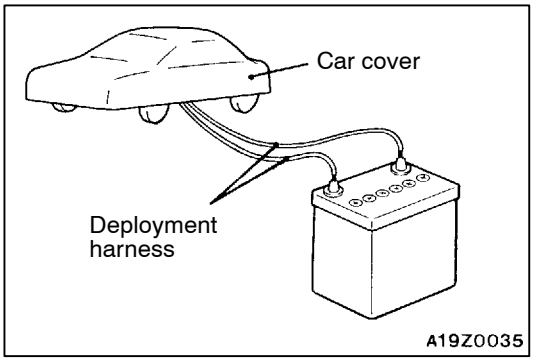


(4) Close all the doors with the windows fully closed and put a cover over the vehicle to minimize report.

**Caution**
**The cover is required as the glass, if already damaged, may break.**

(5) Separate the deployment harnesses as far from the vehicle as possible and connect to the terminals of the battery removed from the vehicle. Then deploy the side air bag module.

Purchased from www.WorkshopManuals.co.uk

www.WorkshopManuals.co.uk

**Caution**

1) **Before deploying the air bag, see that no one is in and near the vehicle.**
2) **The deployment of the side air bag makes the inflator very hot. Before handling the inflator, wait more than 30 minutes for cooling.**
3) **If the air bag module fails to deploy when the procedures above are followed, do not go near the module. Contact your local distributor.**

(6) After deployment of the air bag module, discard as specified in the procedure. (Refer to P.52B-52.)

**DEPLOYMENT OUTSIDE THE VEHICLE**

**Caution**

1. **This should be carried out in a wide, flat area at least 6 m away from obstacles and other people.**
2. **Do not deploy outside if wind is high. Even in a soft wind, ignite to windward of the air bag modules.**

1. Disconnect the negative (-) and positive (+) battery cables from the battery terminals, and then remove the battery from the vehicle.

   **Caution**
   **Wait at least 60 seconds after disconnecting the battery cables before doing any further work. (Refer to P.52B-4, item 5 of the Service Precautions)**

2. Deploy each air bag module as specified in the service procedures that follows.

   **Driver's air bag module**

   (1) Remove the driver's air bag module from the vehicle. (Refer to P.52B-32)

   **Caution**
   **Once disconnected, both electrodes of the driver's air bag module connector short automatically to prevent accidental deployment caused by static etc. Still in consideration of the accidental deployment, store the air bag module on flat place with deployment surface facing up. Do not place anything on top of it.**

   (2) Connect two wires, each 6 meters or longer, to the two leads of SRS air bag adapter harness and cover the connections with insulation tape. The other ends of the two wires should be connected to each other(short-circuited), to prevent sudden unexpected deployment of the driver's air bag.

   (3) Touch the vehicle's body with bare hands to discharge static in you.

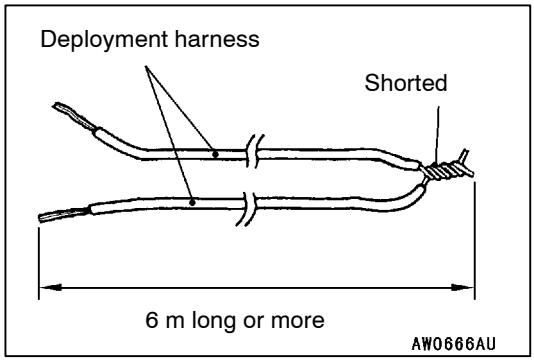


Purchased from www.WorkshopManuals.co.uk

www.WorkshopManuals.co.uk

**Caution**
**Never fail to do Step (3) in order to prevent accidental deployment caused by static.**

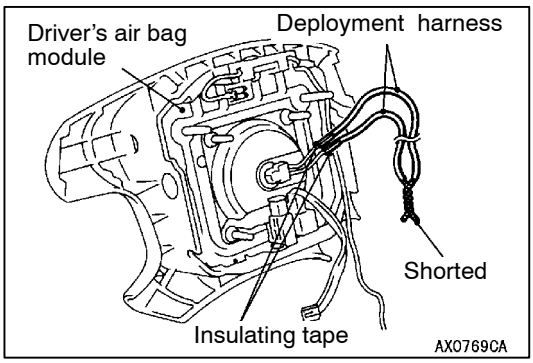


(4) Using pliers, cut the driver's air bag module connector from the harnesses. Connect the deployment harnesses to each harness that has been cut and insulate the connections with plastic tape.

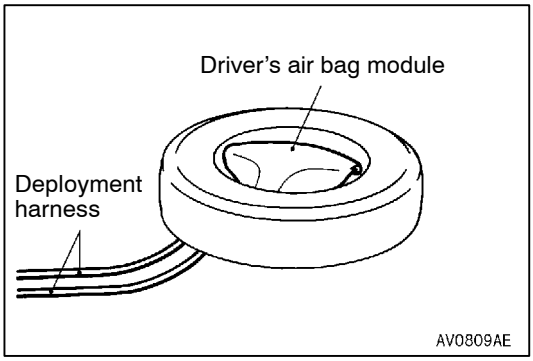


(5) Install a nut to the bolt behind the driver's air bag module and tie thick wire for securing to the wheel.

(6) Take the SRS air bag adapter harness that is connected to the wires, pass it beneath the old tyre wheel assembly, and connect it to the driver's air bag module. With the driver's air bag module upwards, place it in the wheel of old tyre and secure with the wire tied to the bolt.

**Caution**
**The deployment harnesses must not be tight below the wheel. Otherwise, the adapter harness could get damaged at deployment.**

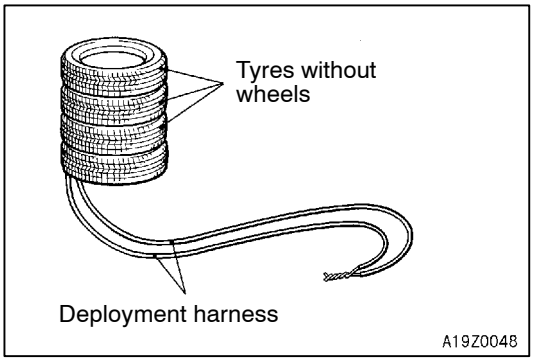


(7) Place three old tyres without wheels on top of the tyre secured to the driver's air bag module.

Purchased from www.WorkshopManuals.co.uk

www.WorkshopManuals.co.uk

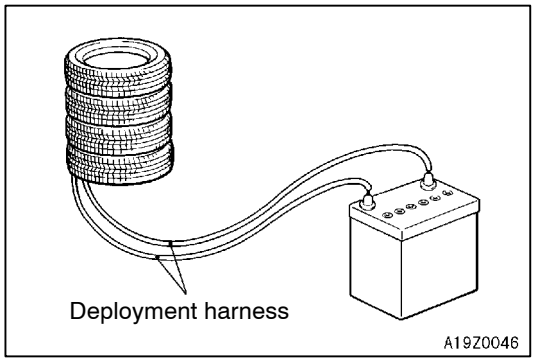


(8) Disconnect the deployment harnesses as far from the driver's air bag module as possible and connect the wires to the terminals of the battery removed from the vehicle. Then deploy the air bag.

**Caution**

**1) Before the deployment, be sure that no one is near the driver's air bag module.**
**2) The deployment makes the inflator of the driver's air bag very hot. Before handling the inflator, wait more than 30 minutes for cooling.**
**3) If the driver's air bag module fails to deploy although the procedure is respected, do not go near the module. Contact your distributor.**

(9) After deployment of the driver's air bag module, discard as specified in the procedure. (Refer to P.52B-52.)

**Passenger's air bag module**

(1) Remove the passenger's air bag module from the vehicle.
(Refer to P.52B-32.)

**Caution**

**Once disconnected, both electrodes of the passenger's air bag module connector short automatically to prevent accidental deployment caused by static etc. Still, in consideration of the accidental deployment, store the air bag module on flat place with deployment surface facing up. Do not place anything on top of it.**

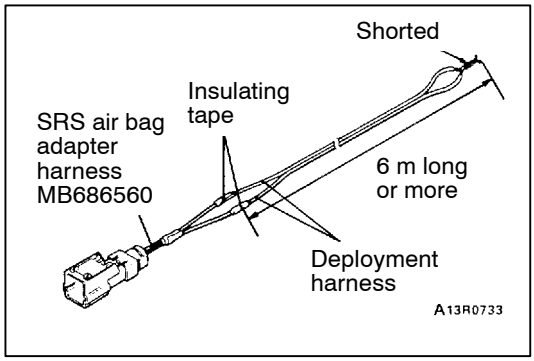


(2) Connect deployment harnesses longer than 6 m to each SRS air bag adapter harness and insulate the connections with plastic tape.
Also, connect the deployment harnesses in the other ends to short, thereby preventing the passenger's air bag from accidental deployment caused by static etc.

(3) Route the SRS air bag adapter harness with the deployment harnesses beneath an old tyre and wheel assembly. Then, connect the harnesses to the passenger's air bag module.

Purchased from www.WorkshopManuals.co.uk

www.WorkshopManuals.co.uk

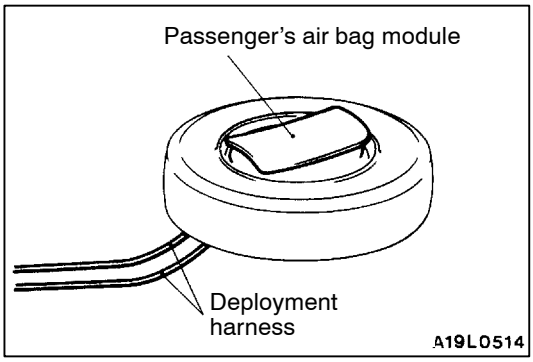


(4) Route a thick wire through the holes in the passenger's air bag module bracket. With the deployment surface facing up, secure the passenger's air bag module to the old tyre and wheel assembly.

**Caution**

1) **The deployment harnesses must not be tight below the wheel. Otherwise, the adapter harness could get damaged at deployment.**
2) **Place the connector of the SRS air bag adapter harness so that it is not clamped by the tyre at deployment.**

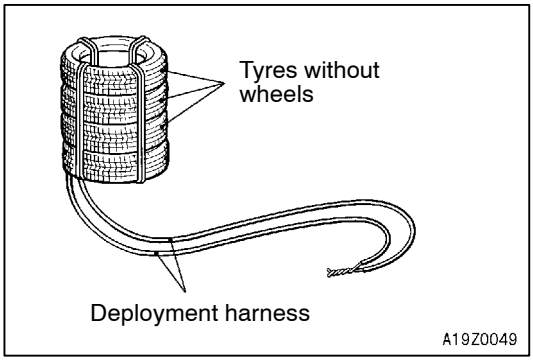


(5) Put three old tyres without wheels on the tyre secured to the passenger's air bag module. Secure all the tyres with ropes (4 locations).

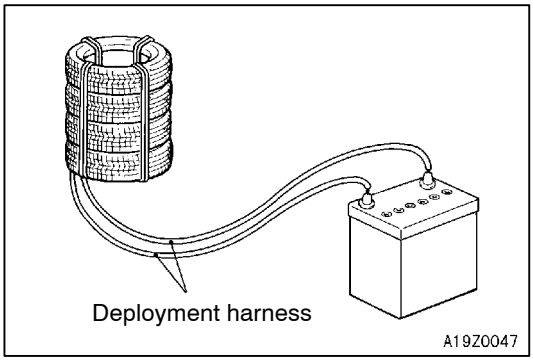


(6) Disconnect the deployment harnesses as far from the passenger's air bag module as possible and connect the harnesses to the battery removed from the vehicle. Then deploy the airbag.

**Caution**

1) **Before the deployment, see that no one is near the passenger's air bag module.**
2) **The deployment makes the inflator of the passenger's air bag very hot. Before handling the inflator, wait more than 30 minutes for cooling.**
3) **If the passenger's air bag module fails to deploy although the procedure is respected, do not go near the module. Contact your local distributor.**

(7) After deployment of the passenger's air bag module, discard as specified in the procedure. (Refer to P.52B-52.)

**<Side air bag module>**

(1) Remove the front seat back assembly with side air bag module from the vehicle. (Refer to 52B-32.).

Purchased from www.WorkshopManuals.co.uk

www.WorkshopManuals.co.uk

**Caution**
**Once disconnected, both electrodes of the side air bag module connector short automatically to prevent accidental deployment caused by static etc. Still, in consideration of the accidental deployment, store the air bag module on flat place with deployment surface facing up. Do not place anything on top of it.**

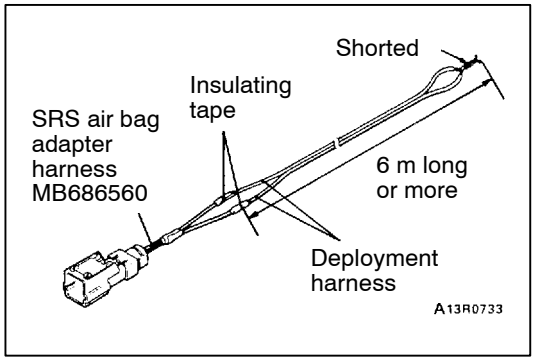


(2) Connect deployment harnesses longer than 6 m to each SRS air bag adapter harness and insulate the connections with plastic tape.
Also, connect the deployment harnesses in the other ends to short, thereby preventing the side air bag from accidental deployment caused by static etc.

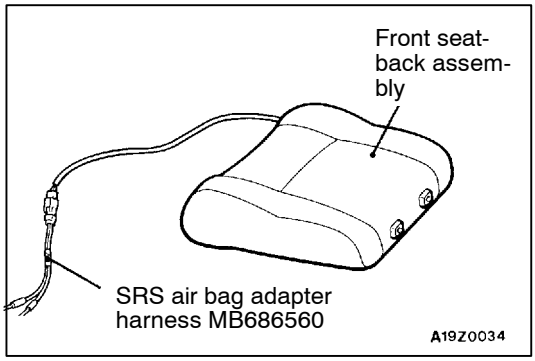


(3) Place the front seat back assembly with its back facing the ground.
(4) Connect the SRS air bag adapter harness which connected with the deployment harness to the side air bag module connector.

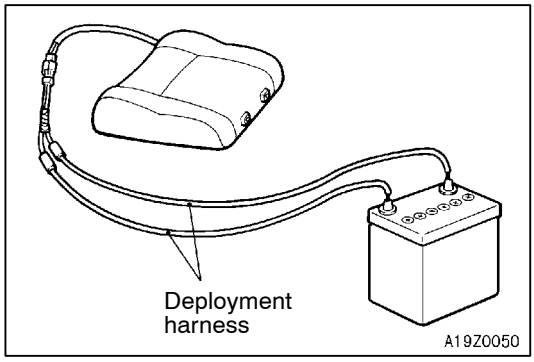


(5) Disconnect the deployment harnesses as far from the front seat back assembly as possible and connect the harnesses to the battery removed from the vehicle. Then deploy the air bag.

**Caution**
1) **Before the deployment, see that no one is near the front seat back assembly.**
2) **The deployment of the side air bag makes the inflator very hot. Before handling the inflator, wait more than 30 minutes for cooling.**
3) **If the side air bag module fails to deploy when the procedures above are followed, do not go near the module. Contact your local distributor.**

(6) Remove the deployed side air bag module from the seat back assembly and discard as specified in the procedure. (Refer to P.52B-52.)

Purchased from www.WorkshopManuals.co.uk

www.WorkshopManuals.co.uk

## DEPLOYED AIR BAG MODULE DISPOSAL PROCEDURES

After the deployment, discard the air bag modules the same way as any other scrap parts, respecting local laws and/or legislation that may be in force.
However, note the following points at the disposal:

1. The inflators will be quite hot just after deployment. So, wait at least 30 minutes to cool it before handling.
2. Do not put water or oil on the air bags after deployment.
3. There may be, adhered to the deployed air bag modules, material that could irritate the eye and/or skin, so put on gloves and safety glasses when handling the deployed air bag module.

   **Caution**
   **If after following these precautions, any material does get into the eyes or on the skin, immediately rinse the affected area with a large amount of clean water. If any irritation develops, seek medical attention.**

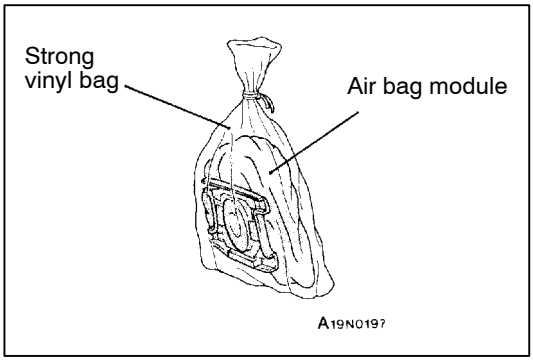


4. Discard the air bag module in a vinyl bag tightly sealed.
5. Be sure to always wash your hands after completing this operation.

Purchased from www.WorkshopManuals.co.uk

www.WorkshopManuals.co.uk


# SUPPLEMENTAL RESTRAINT SYSTEM (SRS)

## CONTENTS

GENERAL . . . . . 2
SRS SERVICE PRECAUTIONS . . . . . 3
SPECIAL TOOLS . . . . . 5
TROUBLESHOOTING . . . . . 6
POST-COLLISION DIAGNOSIS . . . . . 10
INDIVIDUAL COMPONENT SERVICE . . . . . 11
WARNING/CAUTION LABELS . . . . . 11
SEAT BELT WITH PRE-TENSIONER . . . . . 12
SEAT BELT PRE-TENSIONER DISPOSAL PROCEDURES . . . . . 14
Undeployed Seat Belt Pre-tensioner Disposal . . 14
Operated Seat Belt Pre-tensioner Disposal Procedures . . . . . 18

**CAUTION**

- **Carefully read and observe the information in the SRS SERVICE PRECAUTIONS (P.52B-3.) prior to any service.**
- **For information concerning troubleshooting or maintenance, always observe the procedures in the Troubleshooting (P.52B-6.) section.**
- **If any SRS components are removed or replaced in connection with any service procedures, be sure to follow the procedures in the INDIVIDUAL COMPONENT SERVICE section (P.52B-11.) for the components involved.**
- **If you have any questions about the SRS, please contact your local distributor.**

Purchased from www.WorkshopManuals.co.uk

www.WorkshopManuals.co.uk

# GENERAL

## OUTLINE OF CHANGES

- A service procedure has been established as seat belts with pre-tensioner have been added.
- The side impact sensor circuit has been changed. The sensor service procedure is the same as before.

## SEAT BELT WITH PRE-TENSIONER

**Caution**
**Never disassemble the seat belt with pre-tensioner.**

The driver's and passenger's seat belt pre-tensioners take up seat belt slack immediately when a collision takes place, thus restraining the pre-tensioners on the seats simultaneously with the SRS air bags. this improves the passive safety. when the G sensor in the SRS-ECU detects impact above a certain level during a collision, the pre-tensioner operates as follows:

1. The igniting heater heats up according to the signal from the SRS-ECU.
2. this ignites the gas generant and explosive gas will be generated.
3. The strip is pushed outwards by the gas pressure. As the strip wound around the clutch sleeve is pulled out, the clutch sleeve rotates at high speed.
4. The clutch sleeve rotates to wind the webbing.

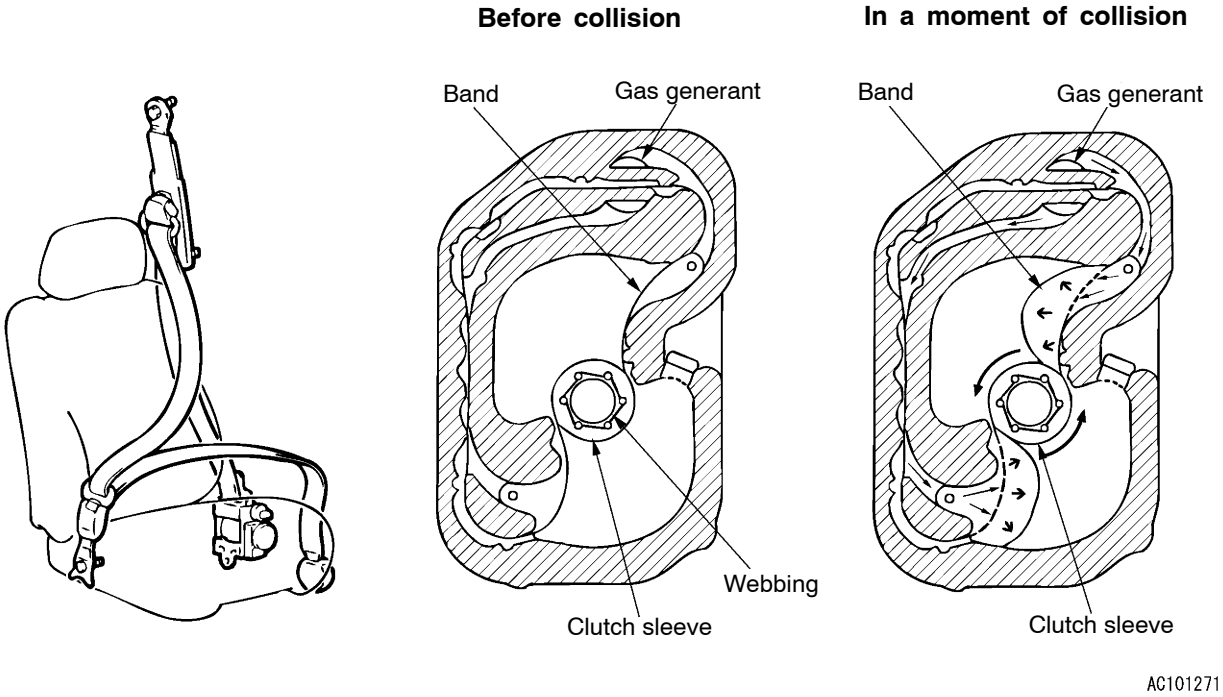


Purchased from www.WorkshopManuals.co.uk

www.WorkshopManuals.co.uk

## SIDE IMPACT SENSOR

The power supply circuit to the side impact sensor and the communication line have been unified. This contributes to simplifying wiring harnesses and improving reliability.

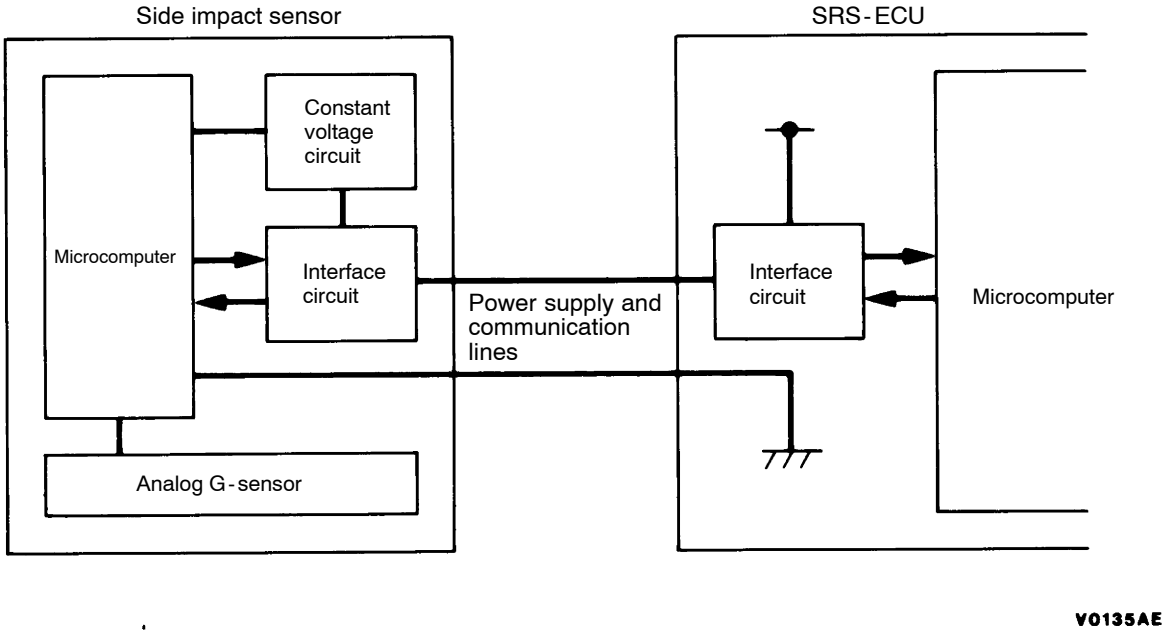


# SRS SERVICE PRECAUTIONS

1. In order to avoid injury to yourself or others from accidental deployment of the air bag and accidental operation of the seat belt with pre-tensioner during servicing, read and carefully follow all the precautions and procedures described in this manual.
2. Do not use any electrical test equipment on or near SRS components, except those specified on G.52B-6.
3. **Never Attempt to Repair the Following Components:**
   - SRS air bag control unit (SRS-ECU)
   - Clock spring
   - Driver's and front passenger's air bag modules
   - Side air bag modules
   - Front impact sensors
   - Side impact sensors
   - Seat belt with Pre-tensioner

NOTE
If any of these components are diagnosed as faulty, they should only be replaced, in accordance with the INDIVIDUAL COMPONENTS SERVICE procedures in this manual, starting at page G.52B-26.

Purchased from www.WorkshopManuals.co.uk

www.WorkshopManuals.co.uk

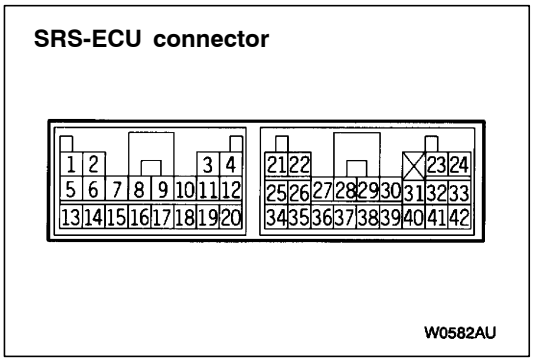


4. **Do not attempt to repair the wiring harness connectors of the SRS. If a defective wiring harness is found, repair or replace it by referring to the table follows.**

   NOTE
   The table below shows the pre-tensioner related terminals only. The other terminals are the same as before.

| SRS-ECU Terminal No. | Destination of harness | Corrective action |
|---|---|---|
| 27, 28 | Floor wiring harness → Seat belt with pre-tensioner (Front passenger's side) | Correct or replace each wiring harness. |
| 29, 30 | Floor wiring harness → Seat belt with pre-tensioner (Driver's side) | |

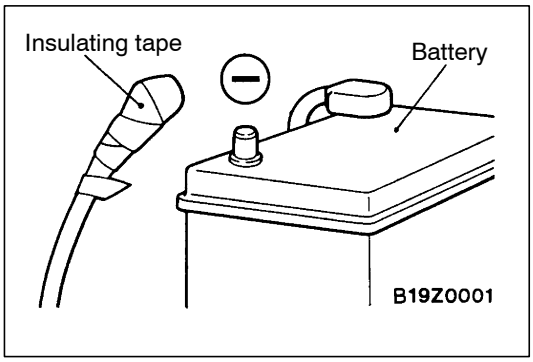


5. **After disconnecting the negative (–) battery cable, wait 60 seconds at least before any service and insulate the disconnected cable with tape. The SRS retain enough voltage to deploy the air bags for a short time even after the disconnection of the battery. So, serious injury may result by accidental air bag deployment if a work is done on the SRS just after the disconnection of the battery.**

6. **SRS components and seat belt with pre-tensioner should not be subjected to heat, so remove the SRS-ECU, air bag module (driver's side and front passenger's side), clock spring, side impact sensor, front seat assembly (side air bag module), and seat belt with pre-tensioner before drying or baking the vehicle after painting.**
   - **SRS-ECU, air bag module, clock spring, side impact sensor: 93°C or more**
   - **Seat belt with pre-tensioner: 90°C or more**
7. **Whenever you finish servicing the SRS, check warning lamp operation to make sure that the system functions properly.**

Purchased from www.WorkshopManuals.co.uk

www.WorkshopManuals.co.uk

8 **If checks are carried out by using the SRS-ECU harness connector, observe the following procedures:**
**Insert the special tool (probe in the harness set) into connector from harness side (rear side), and connect the tester to this probe. If any tool than special tool is used, damage to the harness and other components will result. Never insert the probe directly to the terminals from the front of the connector. The terminals are plated to increase their conductivity, so that if they are touched directly by the probe, the plating may break, which will cause drops in reliability.**

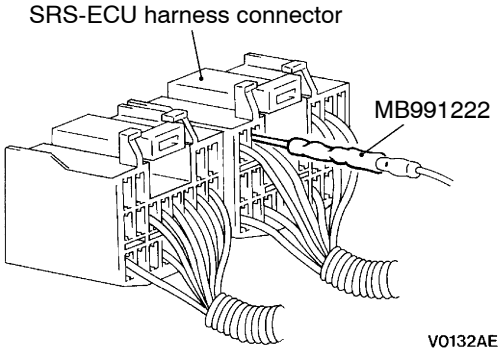


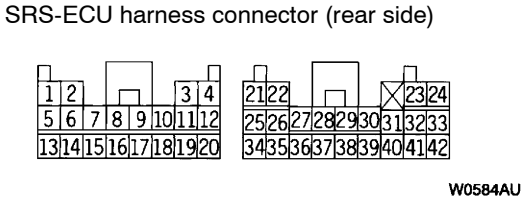


## SPECIAL TOOLS

The items other than below are the same as before.

| Tools | No. | Name | Application |
|---|---|---|---|
| 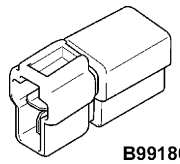 B991865 | MB991865 | Dummy resistor | SRS air bag circuit check |
| 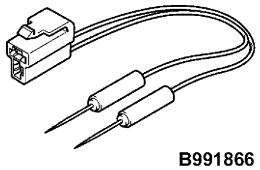 B991866 | MB991866 | Resistor harness | |

Purchased from www.WorkshopManuals.co.uk

www.WorkshopManuals.co.uk

# TROUBLESHOOTING

The following items have been changed. The other items are the same as before.

## INSPECTION CHART FOR DIAGNOSIS CODES

| Code No. | Diagnosis item | Reference page |
|---|---|---|
| 26*, 27*, 66, 67 | Driver's side pre-tensioner (squib) system | 52B-7 |
| 28*, 29*, 68, 69 | Front passenger's side pre-tensioner (squib) system | 52B-8 |
| 56, 57 | Driver's side pre-tensioner (squib ignition drive circuit) system | 52B-9 |
| 58, 59 | Front passenger's side pre-tensioner (squib ignition drive circuit) system | 52B-9 |

NOTE
*: If the system returns to normal, the SRS warning lamp will go out, but the relevant diagnosis code will be retained in memory.

Purchased from www.WorkshopManuals.co.uk

www.WorkshopManuals.co.uk

## INSPECTION PROCEDURE CLASSIFIED BY DIAGNOSIS CODE

| Code No.26, 27, 66 or 67 Driver's side pre-tensioner (squib) system | Probable cause |
|---|---|
| These diagnosis codes are output if there is abnormal resistance between the input terminals of the driver's side pre-tensioner (squib).<br>The trouble causes for each diagnosis code No. are as follows. | • Malfunction of wiring harnesses or connectors<br>• Malfunction of driver's side pre-tensioner (squib)<br>• Malfunction of SRS-ECU |

| Code No. | Trouble causes |
|---|---|
| 26 | • Short in driver's side pre-tensioner (squib) or harness short |
| 27 | • Open circuit in driver's side pre-tensioner (squib) or open harness<br>• Malfunction of connector contact |
| 66 | • Short in driver's side pre-tensioner (squib) harness leading to the power supply |
| 67 | • Short in driver's side pre-tensioner (squib) harness leading to the earth |

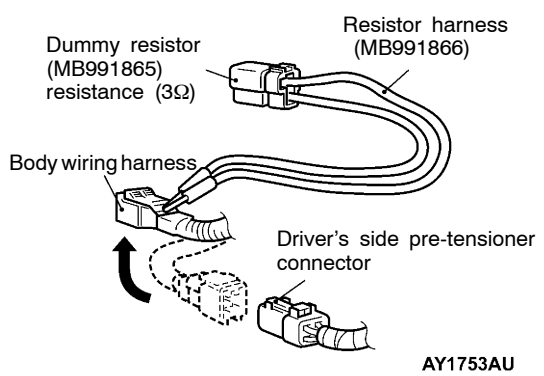


**MUT-II Self-diag code**

- Connect the dummy resistor (MB991865) to the resistor harness (MB991866).
- Disconnect driver's side pre-tensioner connector F-34 <L.H. drive vehicles> or F-31 <R.H. drive vehicles> 28, and insert probe of resistor harness MB991866 to the connector by backprobling.

**Caution**
**Never insert the probe directly to the terminals from the front of the connector.**

- Connect the negative (-) battery terminal.
- Erase diagnosis code memory.

Is code No.26, 27, 66 or 67 displayed?

YES → **Check the following connectors:** E-110, E-21, F-34 <L.H. drive vehicles>, E-20, F-31 <R.H. drive vehicles>

- OK → Check trouble symptoms.
  - NG → Check trouble symptoms. → NG → Check wiring harness between the driver's side pre-tensioner and SRS-ECU.
    - OK → Replace SRS-ECU.
    - NG → **Repair**
- NG → **Repair**

NO → Replace the driver's side seat belt with pre-tensioner.

Purchased from www.WorkshopManuals.co.uk

www.WorkshopManuals.co.uk

| Code No.28, 29, 68 or 69 Front passenger's side pre-tensioner (squib) system | Probable cause |
|---|---|
| These diagnosis codes are output if there is abnormal resistance between the input terminals of the front passenger's side pre-tensioner (squib).<br>The trouble causes for each diagnosis code No. are as follows. | • Malfunction of wiring harnesses or connectors<br>• Malfunction of front passenger's side pre-tensioner (squib)<br>• Malfunction of SRS-ECU |

| Code No. | Trouble causes |
|---|---|
| 28 | • Short in front passenger's side pre-tensioner (squib) or harness short |
| 29 | • Open circuit in front passenger's side pre-tensioner (squib) or open harness<br>• Malfunction of connector contact |
| 68 | • Short in front passenger's side pre-tensioner (squib) harness leading to the power supply |
| 69 | • Short in front passenger's side pre-tensioner (squib) harness leading to the earth |

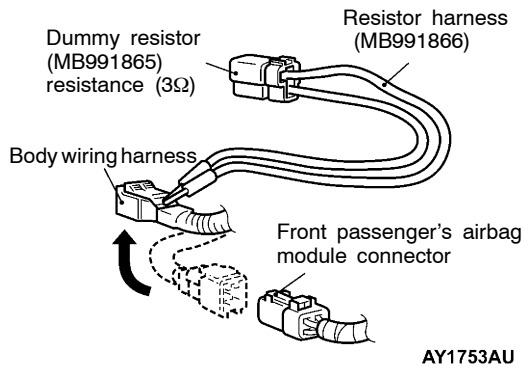


**MUT-II Self-diag code**

- Connect the dummy resistor (MB991865) to the resistor harness (MB991866).
- Disconnect front passenger's side pre-tensioner connector F-31 <L.H. drive vehicles> or F-34 <R.H. drive vehicles>, and insert probe of resistor harness MB991866 to the connector by backprobling.

**Caution**
**Never insert the probe directly to the terminals from the front of the connector.**

- Connect the negative (-) battery terminal.
- Erase diagnosis code memory.

Is code No.28, 29, 68 or 69 displayed?

YES

**Check the following connectors:** E-110, E-20, F-31 <L.H. drive vehicles>, E-21, F-34 <R.H. drive vehicles>

OK → Check trouble symptoms.

NG → **Repair**

NG

Check wiring harness between the front passenger's side pre-tensioner and SRS-ECU.

OK → Replace SRS-ECU.

NG → **Repair**

NO

Replace the front passenger's side pre-tensioner.

Purchased from www.WorkshopManuals.co.uk

www.WorkshopManuals.co.uk

| Code No.56, 57, 58, 59 System inside SRS-ECU | Probable cause |
|---|---|
| These diagnostic trouble codes are output when a fault is detected in the SRS-ECU. The defective parts and trouble causes for each diagnosis code No. are as follows. | • Malfunction of SRS-ECU |

| Code No. | Defective parts | Trouble causes |
|---|---|---|
| 56 | Driver's side pre-tensioner (squib ignition drive circuit) | • Short circuit in the squib ignition drive circuit |
| 57 | | • Open circuit in the squib ignition drive circuit |
| 58 | Front passenger's side pre-tensioner (squib ignition drive circuit) | • Short circuit in the squib ignition drive circuit |
| 59 | | • Open circuit in the squib ignition drive circuit |

If the diagnosis code(s) above is set, replace the SRS-ECU.

Purchased from www.WorkshopManuals.co.uk

www.WorkshopManuals.co.uk

# POST-COLLISION DIAGNOSIS

Check and service the vehicle after collision as follows regardless of the operation of the pre-tensioner:

## SRS-ECU MEMORY CHECK

The check procedure is the same as before.

## REPAIR PROCEDURE

### WHEN PRE-TENSIONER OPERATES IN A COLLISION.

1. Replace the following parts with new ones.
   - SRS-ECU
   - Front impact sensor
   - Seat belt with pre-tensioner (Refer to P.52B-12.)
2. Check harnesses for binding, connectors for damage, poor connections, and terminals for deformation.

### UNDEPLOYED AIR BAGS IN LOW-SPEED COLLISION

Check the SRS-ECU and Front impact sensor and Seat belt with pre-tensioner. If visible damage such as dents, cracks, or deformation are found on the the SRS-ECU and Front impact sensor and Seat belt with pre-tensioner, replace them with new ones. Concerning parts removed for inspection, replacement with new parts and cautions in working, refer to INDIVIDUAL COMPONENT SERVICE.

**SRS-ECU**

The check procedure is the same as before.

**Front impact sensor**

The check procedure is the same as before.

**Seat belt with pre-tensioner**

1. Check the seat belt for damage or deformation.
2. Check the pre-tensioner for cracks or deformation.
3. Check that the unit is installed correctly to the vehicle body.

Purchased from www.WorkshopManuals.co.uk

www.WorkshopManuals.co.uk

# INDIVIDUAL COMPONENT SERVICE

If the seat belt with pre-tensioner are to be removed or replaced as a result of maintenance, troubleshooting, etc., follow each procedure (P.52B-10 - P.52B-13.)

**Caution**

1. **The seat belt with pre-tensioner should not be subjected to temperature 90°C, so remove the seat belts with pre-tensioner before drying or baking the vehicle after painting.**
2. **If the seat belt with pre-tensioner are removed for the purpose of check, sheet metal repair, painting, etc., they should be stored in a clean, dry place until they are reinstalled.**

# WARNING/CAUTION LABELS

Caution labels on the seat belt with pre-tensioner are attached in the vehicle as shown. Follow label instructions when servicing the seat belt with pre-tensioner. If the label(s) are dirty or damaged, replace with new one(s).

**Seat belt with pre-tensioner**

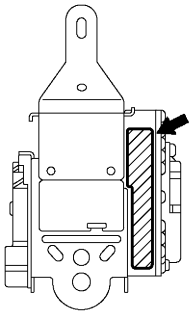


Purchased from www.WorkshopManuals.co.uk

www.WorkshopManuals.co.uk

# SEAT BELT WITH PRE-TENSIONER

**Caution**

1. **Never attempt to disassemble or repair the with pre-tensioner. If faulty, replace it.**
2. **Be extremely careful when handling the seat belt with pre-tensioner. Do not subject it to shocks, drop it, bring it close to strong magnets or allow contact with water, grease or oil. Always replace it with a new part if any dents, cracks or deformation is found.**
3. **Do not place anything on top of the pre-tensioner.**
4. **Do not expose the seat belt with pre-tensioner to temperatures over 90°C.**
5. **After operating the pre-tensioner, replace the seat belt pre-tensioner with a new part.**
6. **Gloves and protective goggles should be worn when handling a pre-tensioner once it has been used.**
7. **If disposing of a seat belt with pre-tensioner which has not yet been used, its pre-tensioner should be operated first before disposal. (Refer to P.52B-14.)**

## REMOVAL AND INSTALLATION

**Pre-removal and Post-installation Operation**
- Turn Ignition Key to LOCK (OFF) Position
- Disconnect the Negative (-) Battery Terminal.

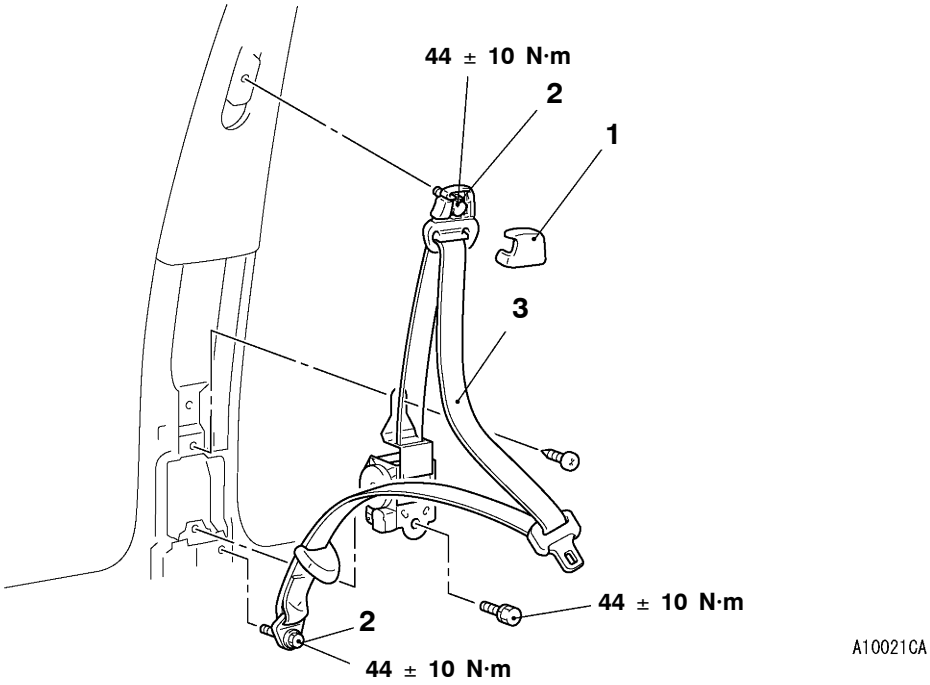


**Removal steps**

1. Sash guide cover
2. Outer seat belt connection
- Center pillar trim, lower
3. Seat belt with pre-tensioner

**Installation steps**

▶A◀ - Post-installation inspection
3. Seat belt with pre-tensioner
- Center pillar trim, lower
2. Outer seat belt connection
1. Sash guide cover
- Negative (-) battery cable connection
▶B◀ - Pre-installation inspection

NOTE
The figure shows the seat belt with pre-tensioner (RH)

Purchased from www.WorkshopManuals.co.uk

www.WorkshopManuals.co.uk

## INSTALLATION SERVICE POINTS

### ▶A◀ PRE-INSTALLATION INSPECTION

1. Even new seat belt with pre-tensioner require inspection before installation.

   **Caution**
   **When discarding the seat belt with pre-tensioner, operate the pre-tensioner as specified in the service procedure. (Refer to P.52B-14.)**

2. Connect the negative (-) battery terminal.
3. Connect the MUT-II to the diagnosis connector (16 pin).

   **Caution**
   **Turn the ignition switch to the LOCK (OFF) position when connecting and disconnecting the MUT-II.**

4. Turn the ignition key to the ON position.
5. Read a diagnosis code to refer to that the SRS is operating properly except an open in the air bag module circuit.
6. Turn the ignition switch to LOCK(OFF) position.
7. Disconnect the negative (-) battery cable and insulate with tape.

   **Caution**
   **Wait at least 60 seconds after the disconnection of the battery cable before any further job.**
   **(Refer to P.52B-4, item 5 of the Service Precautions)**

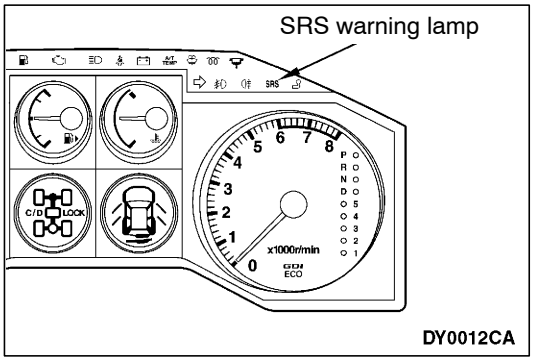


### ▶B◀ POST-INSTALLATION INSPECTION

1. Reconnect the negative (-) battery terminal.
2. Turn the ignition key to the ON position.
3. Does the SRS warning lamp illuminate for about 7 seconds after turning OFF?
4. If no, refer to troubleshooting.
   (Refer to P.52B-6)

## INSPECTION

### SEAT BELT WITH PRE-TENSIONER CHECK

If any part is found to be faulty during the inspection, it must be replaced with a new one.
Dispose of the old one according to the specified procedure. (Refer to P.52B-14.)

- Check pre-tensioner for dents, cracks or deformation.

Purchased from www.WorkshopManuals.co.uk

www.WorkshopManuals.co.uk

# SEAT BELT PRE-TENSIONER DISPOSAL PROCEDURES

Before disposing of a vehicle which is equipped with seat belts with pre-tensioner, or when disposing of the seat belts with pre-tensioner themselves, the following procedures must be used to deploy the pre-tensioners before disposal.

## UNDEPLOYED SEAT BELT PRE-TENSIONER DISPOSAL

**Caution**

1. **If the vehicle is to be scrapped or otherwise disposed of, operate the pre-tensioners inside the vehicle. If the vehicle is still to be used and only the seat belt pre-tensioner are to be disposed of, operate the pre-tensioners outside the vehicle.**
2. **Since a large amount of smoke is produced when the pre-tensioner is operated, avoid residential areas whenever possible.**
3. **Since there is a loud noise when the pre-tensioners are operated, avoid residential areas whenever possible. If anyone is nearby, give warning of the impending noise.**
4. **Suitable ear protection should be worn by personnel performing these procedures or by people in the immediate area.**

### DEPLOYMENT INSIDE THE VEHICLE

1. Move the vehicle to an isolated spot.
2. Disconnect the negative (-) and positive (+) battery cables from the battery terminals, and then remove the battery from the vehicle.

   **Caution**
   **Wait at least 60 seconds after disconnecting the battery cables before doing any further work.**
   **(Refer to P.52B-4.)**

3. Operate the pre-tensioner as specified in the service procedures that follows.
   (1) Remove the center pillar trim, lower.

Purchased from www.WorkshopManuals.co.uk

www.WorkshopManuals.co.uk

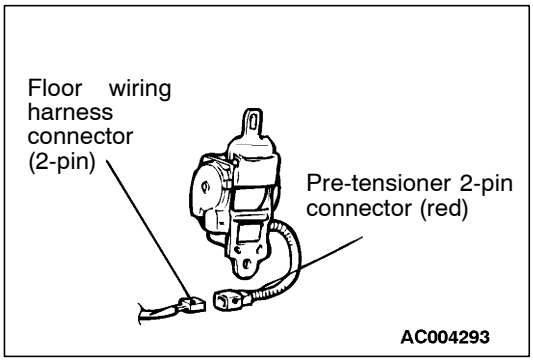


(2) Remove the connection between the pre-tensioner 2-pin connector (red) and the floor wiring harness connector (2-pin).

**Caution**
**The pre-tensioner both in the driver's and passenger's sides should be operated.**

NOTE
Once disconnected from the body wiring harness, both electrode of the pre-tensioner connector short automatically. This prevents the pre-tensioner from accidental operation caused by static etc.

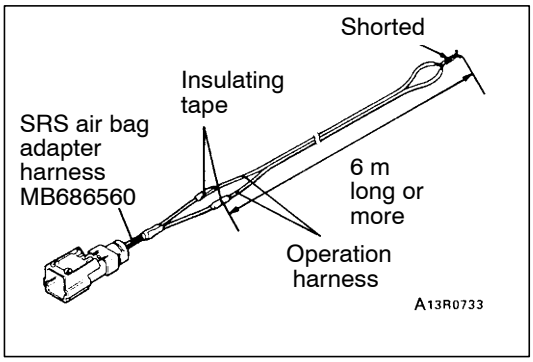


(3) Connect operation harness longer than 6 m to each SRS air bag adapter harness and insulate the connections with plastic tape.
Also, connect the operation harness in the other ends to short, thereby preventing the pre-tensioner from accidental operation caused by static etc.

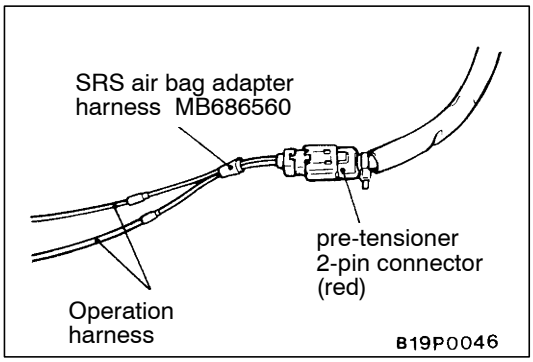


(4) Connect the SRS air bag adapter harness to the pre-tensioner 2-pin connector (red) and route the operation harness out of the vehicle.

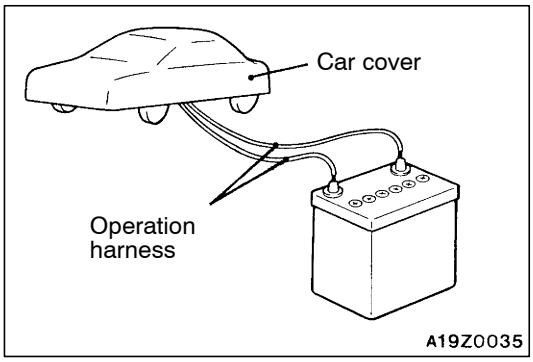


(5) Close all the doors with the windows fully closed and put a cover over the vehicle to minimize report.

**Caution**
**The cover is required as the glass, if already damaged, may break.**

(6) Separate the operation harness as far from the vehicle as possible and connect to the terminals of the battery removed from the vehicle. Then operate the pre-tensioner.

Purchased from www.WorkshopManuals.co.uk

www.WorkshopManuals.co.uk

**Caution**

1) **Before operating the pre-tensioner, see that no one is in and near the vehicle.**
2) **The operation of the pre-tensioner makes the inflator very hot. Before handling the inflator, wait more than 30 minutes for cooling.**
3) **If the pre-tensioner fails to operate when the procedures above are followed, do not go near the pre-tensioner. Contact your local distributor.**

(7) After operation of the pre-tensioner, discard as specified in the procedure. (Refer to P.52B-18.)

**DEPLOYMENT OUTSIDE THE VEHICLE**

**Caution**

1) **This should be carried out in a wide, flat area at least 6 m away from obstacles and other people.**
2) **Do not operate outside if wind is high. Even in a soft wind, ignite to windward of the pre-tensioner.**

1. Disconnect the negative (-) and positive (+) battery cables from the battery terminals, and then remove the battery from the vehicle.

   **Caution**
   **Wait at least 60 seconds after disconnecting the battery cables before doing any further work. (Refer to P.52B-4.)**

2. Operate pre-tensioner as specified in the service procedures that follows.

(1) Remove the seat belt pre-tensioner from the vehicle. (Refer to P.52B-12.)

**Caution**
**The pre-tensioner should be stored on a flat surface and placed so that the pre-tensioner operation surfaces are facing upward. Do not place anything on top of them.**

Purchased from www.WorkshopManuals.co.uk

www.WorkshopManuals.co.uk

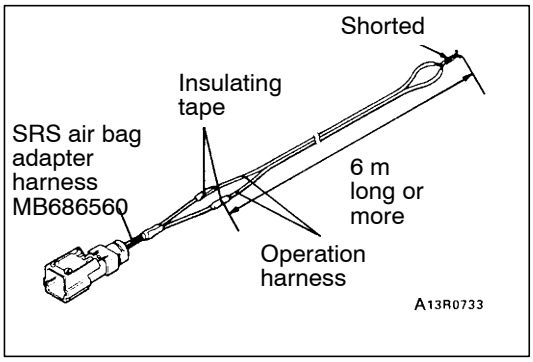


(2) Connect operation harness longer than 6 m to each SRS air bag adapter harness and insulate the connections with plastic tape.
Also, connect the operation harness in the other ends to short, thereby preventing the pre-tensioner from accidental operation caused by static etc.

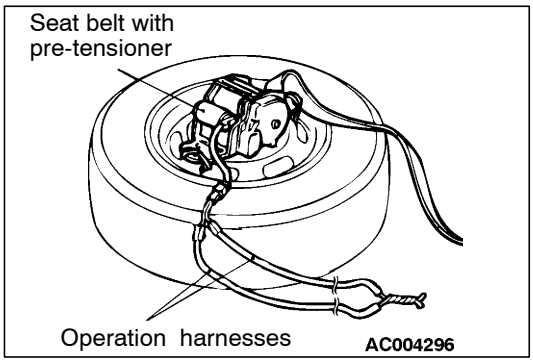


(3) Feed a thick wire through the bracket of the seat belt with pre-tensioner, and connect it to a old tyre with a wheel.
(4) Connect the operation harness to the pre-tensioner.
(5) Pull out the seat belt outside the tyre.

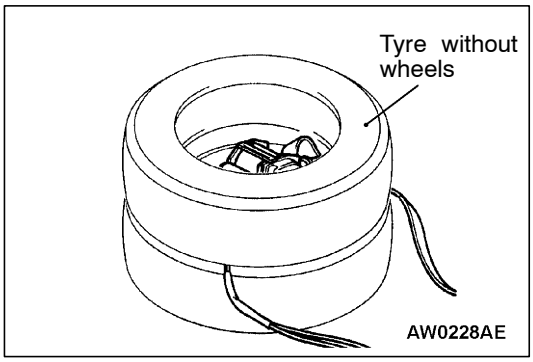


(6) Place an old tyre (without a wheel) on the tyre, which the seat belt with pre-tensioner is secured on.

**Caution**
**Be careful not to trap the SRS air bag adapter harness connector between tyres.**

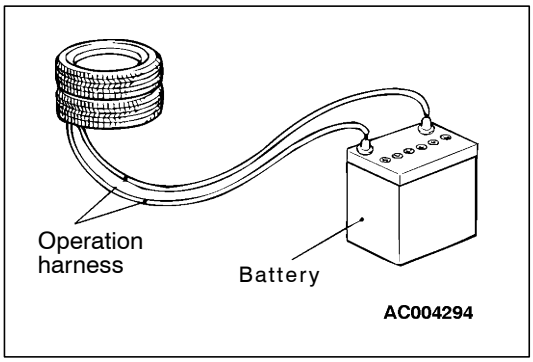


(7) Untie the operation harness ends at the place as far as possible from the seat belt with pre-tensioner, and connect the harness wires to the vehicle battery to activate the pre-tensioner.

**Caution**
1) **Before the operation, be sure that no one is near the pre-tensioner.**
2) **The operation of the pre-tensioner makes itself very hot. Before handling the pre-tensioner, wait more than 30 minutes for cooling.**
3) **If the pre-tensioner fails to operate when the procedures above are followed, do not go near the pre-tensioner. Contact your local distributor.**

(8) After operation of the pre-tensioner, discard as specified in the procedure.

Purchased from www.WorkshopManuals.co.uk

www.WorkshopManuals.co.uk

## OPERATED PRE-TENSIONER DISPOSAL PROCEDURES

After operation, the pre-tensioner should be disposed of in the same manner as any other scrap parts, adhering to local laws and/or legislation that may be in force except that the following points should be carefully noted during disposal.

1. The inflator will be quite hot immediately following operation, so wait at least 30 minutes to allow it cool before attempting to handle it.
2. Do not put water or oil on the pre-tensioner after operation.
3. There may be, adhered to the operated pre-tensioner, material that could irritate the eye and/or skin, so wear gloves and safety glasses when handling a operated pre-tensioner.

   **Caution**
   **If after following these precautions, any material does get into the eyes or on the skin, immediately rinse the affected area with a large amount of clean water. If any irritation develops, seek medical attention.**

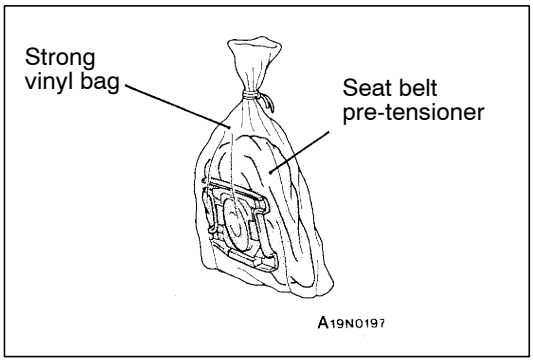


4. Tightly seal the pre-tensioner in a strong vinyl bag for disposal.
5. Be sure to always wash your hands after completing this operation.

Purchased from www.WorkshopManuals.co.uk

www.WorkshopManuals.co.uk

# CHASSIS ELECTRICAL

**Click on the applicable bookmark to selected the required model year.**

Purchased from www.WorkshopManuals.co.uk

www.WorkshopManuals.co.uk

# CHASSIS ELECTRICAL

## CONTENTS


**BATTERY** . . . . . 4
- SERVICE SPECIFICATIONS . . . . . 4
- ON-VEHICLE SERVICE . . . . . 4
  - Electrolyte Level and Specific Gravity Check . . 4
  - Charging . . . . . 5
  - Battery Test . . . . . 5

**IGNITION SWITCH AND IMMOBILIZER <except for 4D56>** . . . . . 6
- SPECIAL TOOLS . . . . . 6
- TROUBLESHOOTING . . . . . 6
- IGNITION SWITCH AND IMMOBILIZER-ECU . . . . . 11

**IGNITION SWITCH AND IMMOBILIZER <4D56>** . . . . . 14
- SPECIAL TOOLS . . . . . 14
- TROUBLESHOOTING . . . . . 14
- IGNITION SWITCH AND IMMOBILIZER-ECU . . . . . 19

**COMBINATION METER** . . . . . 23
- SERVICE SPECIFICATIONS . . . . . 23
- SEALANTS . . . . . 24
- SPECIAL TOOLS . . . . . 24
- TROUBLESHOOTING . . . . . 24
- ON-VEHICLE SERVICE . . . . . 30
  - Speedometer Check . . . . . 30
  - Tachometer Check . . . . . 30
  - Fuel Gauge Unit Check . . . . . 31
  - Engine Coolant Temperature Gauge Unit Check . . . . . 32
- COMBINATION METER . . . . . 33

**HEADLAMP ASSEMBLY** . . . . . 36
- SERVICE SPECIFICATIONS . . . . . 36
- SPECIAL TOOLS . . . . . 36
- TROUBLESHOOTING . . . . . 36
- ON-VEHICLE SERVICE . . . . . 36
  - Headlamp Aiming Adjustment . . . . . 36
  - Luminance Measurement . . . . . 38
  - Headlamp Bulb Replacement . . . . . 39
- HEADLAMP ASSEMBLY . . . . . 40

**FOG LAMPS** . . . . . 41
- SERVICE SPECIFICATIONS . . . . . 41
- SPECIAL TOOLS . . . . . 41
- TROUBLESHOOTING . . . . . 41
- ON-VEHICLE SERVICE . . . . . 41
  - Fog Lamp Aiming Check . . . . . 41
- FOG LAMPS . . . . . 44

**SIDE TURN-SIGNAL LAMPS** . . . . . 45
- SPECIAL TOOLS . . . . . 45
- SIDE TURN-SIGNAL LAMPS . . . . . 46

**ROOM LAMP** . . . . . 46
- TROUBLESHOOTING . . . . . 46


CONTINUED ON NEXT PAGE

Purchased from www.WorkshopManuals.co.uk

www.WorkshopManuals.co.uk


ON-VEHICLE SERVICE . . . . . 46
Room Lamp Delay-off Time Adjustment Procedure . . . . . 46
REAR COMBINATION LAMP . . . . . 47
SPECIAL TOOLS . . . . . 47
TROUBLESHOOTING . . . . . 47
REAR COMBINATION LAMP . . . . . 47
HIGH-MOUNTED STOP LAMP . . . . . 48
COLUMN SWITCH . . . . . 48
SPECIAL TOOLS . . . . . 48
COLUMN SWITCH . . . . . 48
HAZARD WARNING LAMP SWITCH . . . . 50
SPECIAL TOOLS . . . . . 50
HAZARD WARNING LAMP SWITCH . . . . . 50
HORN . . . . . 51
CIGARETTE LIGHTER . . . . . 51
ACCESSORY SOCKET . . . . . 51
RHEOSTAT . . . . . 52
CLOCK OR CENTER DISPLAY . . . . . 53
TROUBLESHOOTING . . . . . 53
CLOCK OR CENTER DISPLAY . . . . . 67
RADIO/TAPE PLAYER . . . . . 68
TROUBLESHOOTING . . . . . 68
RADIO AND CD AUTO CHANGER . . . . . 81
FRONT SPEAKERS . . . . . 82
REAR SPEAKERS . . . . . 82
ANTENNA . . . . . 83
DEFOGGER . . . . . 86
TROUBLESHOOTING <VEHICLES WITH AUTOMATIC AIR CONDITIONER> . . . . . 86
ON-VEHICLE SERVICE . . . . . 86
Printed Heater Check . . . . . 86
Defogger Relay Continuity Check . . . . . 86
DEFOGGER SWITCH . . . . . 87
SMART WIRING SYSTEM (SWS) . . . . . Refer to GROUP 54B
RADIATOR (RADIATOR FAN MOTOR) . . . . . Refer to GROUP 14
AUTOMATIC TRANSMISSION . . . . . Refer to GROUP 23
ANTI-LOCK BRAKE SYSTEM (ABS) . . . . . Refer to GROUP 35B
DOOR HANDLE LATCH (DOOR LOCK) . . . . . Refer to GROUP 42
DOOR GLASS-REGULATOR (POWER WINDOWS) . . . . . Refer to GROUP 42
KEYLESS ENTRY SYSTEM . . . . . Refer to GROUP 42
WINDSHIELD WIPER/WASHER . . . . . Refer to GROUP 51
REAR WIPER/WASHER . . . . . Refer to GROUP 51
SRS AIRBAG . . . . . Refer to GROUP 52B
HEATER . . . . . Refer to GROUP 55
AIR CONDITIONER . . . Refer to GROUP 55

Purchased from www.WorkshopManuals.co.uk

www.WorkshopManuals.co.uk

# BATTERY

## SERVICE SPECIFICATIONS

| Item | Standard value |
|---|---|
| Battery electrolyte specific gravity | 1.220 - 1.290 (electrolyte temperature 20°C ) |

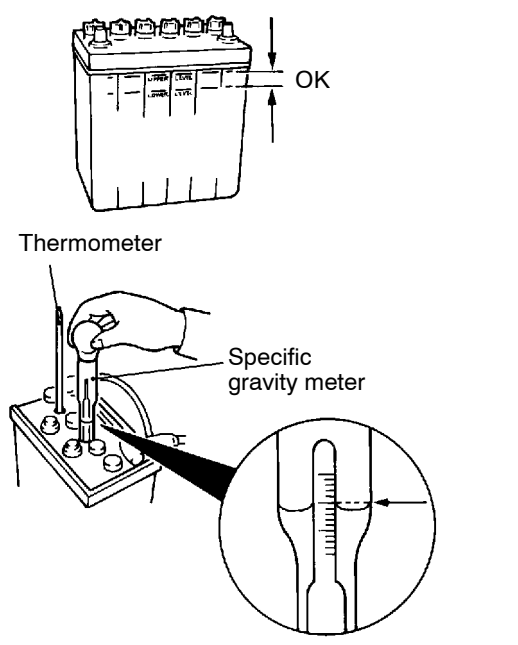


## ON-VEHICLE SERVICE

### ELECTROLYTE LEVEL AND SPECIFIC GRAVITY CHECK

1. Check that the battery electrolyte level is between the UPPER LEVEL and LOWER LEVEL indications.

   **Caution**
   **(1) If the battery is used with the electrolyte level below the LOWER LEVEL indicator, there is the danger that explosions may occur, so add water to the battery until the electrolyte level is between the LOWER LEVEL and UPPER LEVEL indications.**
   **(2) If too much water is added to make the level rise above the UPPER LEVEL indication, the electrolyte may leak out, so adjust so that the electrolyte level is between the LOWER LEVEL and UPPER LEVEL indications.**

2. Use a specific gravity meter and a thermometer to measure the specific gravity.

   **Standard value:**
   **1.220 - 1.290 (electrolyte temperature 20°C)**

   The specific gravity of the battery electrolyte changes according to the temperature, so the specific gravity when the electrolyte is at a temperature of 20°C can be calculated using the following formula.
   Use the converted value to judge whether the electrolyte is okay or not.

   $$D_{20}=(t-20) \times 0.0007+Dt$$

   $D_{20}$: Specific gravity converted to a value for electrolyte temperature of 20C°
   t: Electrolyte temperature at the time of measurement
   Dt: Actual specific gravity

Purchased from www.WorkshopManuals.co.uk

www.WorkshopManuals.co.uk

## CHARGING

1. Remove the battery from the vehicle.
2. The normal charging current is a value in amperes which is 1/10th of the battery capacity. If the battery needs to be charged rapidly because of reasons such as time limitations, the maximum charging current for rapid charging is the battery capacity expressed as an ampere value.

| Battery type | Capacity (5-hour rate) | Normal charging current | Rapid charging current |
|---|---|---|---|
| 75D23 | 54 A | 5.4 A | 54 A |
| 80D26 | 58 A | 5.8 A | 58 A |
| 95D31 | 70 A | 7.0 A | 70 A |

3. Determine when charging is finished.
   - When the specific gravity of the battery electrolyte is constantly within 1.250 - 1.290 for a continuous period of one hour or more
   - When the voltage per cell during charging is 2.5 - 2.8 V constantly for a continuous period of one hour or more

**Caution**

1. **The battery plugs should be removed during charging.**
2. **The battery electrolyte level may rise and overflow from the battery during charging.**
3. **Explosions may occur if the battery is brought close to naked flames during charging.**
4. **Be careful to avoid tasks that might produce sparks or other danger while the battery is charging.**
5. **After charging is complete, replace the battery plugs, pour water over the battery to rinse away any sulphuric acid, and let the battery stand to dry.**
6. **Charge the battery in a well-ventilated location.**
7. **Do not let the battery electrolyte temperature rise above approximately 45°C (approximately 55°C during rapid charging).**

## BATTERY TEST

### Test procedure

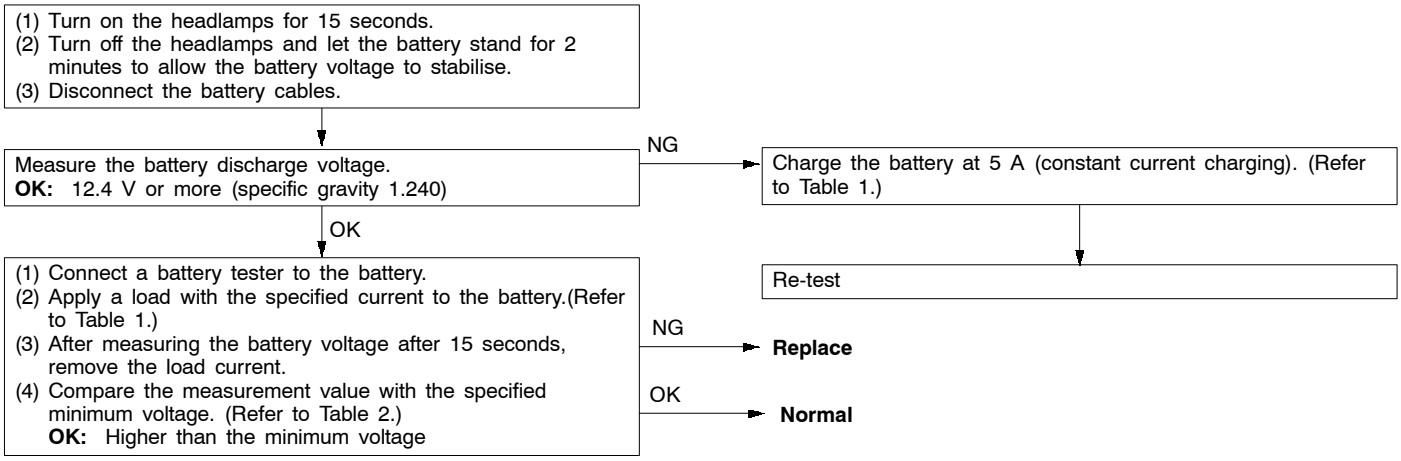


Purchased from www.WorkshopManuals.co.uk

www.WorkshopManuals.co.uk

**(Table 1)**

| Battery type | 75D23 | 80D26 | 95D31 |
|---|---|---|---|
| Charging time when fully discharged [5 A constant current charging] (H) | 11 | 12 | 14 |
| Load current (A) | 260 | 281 | 311 |

**(Table 2)**

| Outside air temperature (°C) | 21 or more | 16 - 20 | 10 - 15 | 4 - 9 | –1 - 3 | –1 - –1 | –12 - –1 | –18 - –13 |
|---|---|---|---|---|---|---|---|---|
| Minimum voltage (V) | 9.6 | 9.5 | 9.4 | 9.3 | 9.1 | 8.9 | 8.7 | 8.5 |

# IGNITION SWITCH AND IMMOBILIZER <EXCEPT FOR 4D56>

## SPECIAL TOOLS

| Tools | No. | Name | Application |
|---|---|---|---|
| 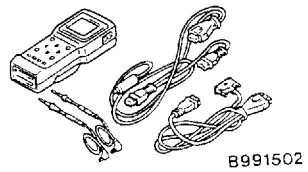  | MB991502 | MUT-II Sub assembly | Checking the ETACS-ECU input signals |
| 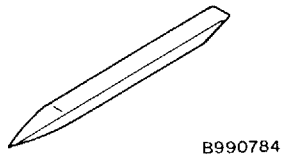  | MB990784 | Ornament remover | Instrument panel under cover and column cover removal |

## TROUBLESHOOTING

### IGNITION SWITCH

The ignition switch is controlled by the Smart Wiring System (SWS), For troubleshooting procedures, refer to GROUP 54B.

### IMMOBILIZER

### BASIC FLOW OF PROBLEM DIAGNOSIS

Refer to GROUP 00 - How to Use Troubleshooting/Inspection Service Points.

### DIAGNOSIS FUNCTION

#### READING DIAGNOSIS CODES

The diagnosis codes can be read using the MUT-II or by using the Simple Check Diagnosis mode. (Refer to GROUP 00 - How to Use Troubleshooting/Inspection Service Points)

NOTE
Connect the MUT-II to the 16-pin diagnosis connector (black).

Purchased from www.WorkshopManuals.co.uk

www.WorkshopManuals.co.uk

### DIAGNOSIS CODE MEMORY ERASING PROCEDURE

Refer to GROUP 00 - How to Use Troubleshooting/Inspection Service Points.

### INSPECTION USING SIMPLE CHECK DIAGNOSIS MODE

1. Change to Simple Check Diagnosis mode and activate switch diagnosis mode. (Refer to GROUP 00 - How to Use Troubleshooting/Inspection Service Points.)
2. In this condition, the input signals for the following switches can be checked.

## CHART CLASSIFIED BY DIAGNOSIS CODES

| Code No. | Diagnosis contents | Reference page |
|---|---|---|
| 11 | Problem related to communication with the ignition key | 54A-7 |
| 12 | Ignition key is not registered, or encrypted code from ignition key does not match. | 54A-7 |

## INSPECTION PROCEDURES FOR EACH DIAGNOSIS CODE

| **Code No. 11 Problem related to communication with the ignition key** | **Probable cause** |
|---|---|
| When the ignition switch is at the ON position, the encrypted codes are not transmitted from the ignition key to the immobilizer-ECU. | ● Malfunction of ignition key<br>● Malfunction of immobilizer-ECU |

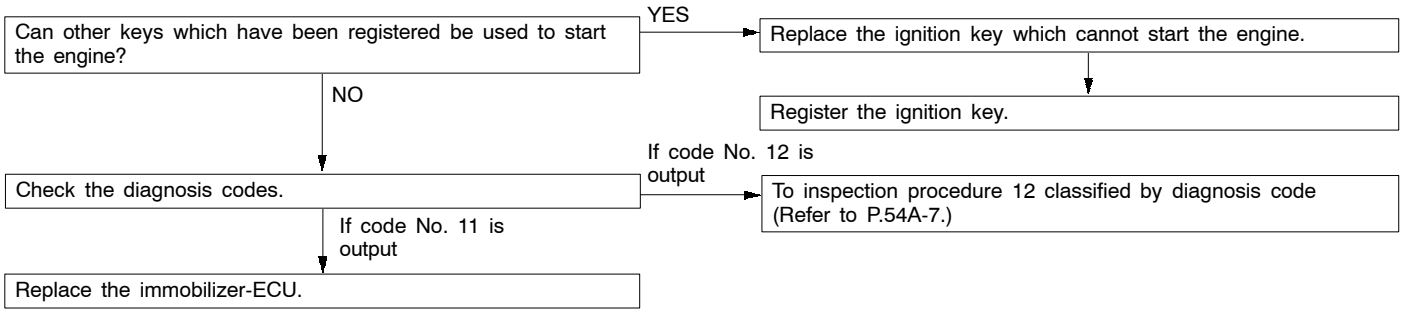


| **Code No. 12 Ignition key is not registered, or encrypted code from ignition key does not match.** | **Probable cause** |
|---|---|
| The ignition key has not been registered with the immobilizer-ECU. | ● The ignition key has not been registered with the immobilizer-ECU.<br>● Malfunction of immobilizer-ECU |

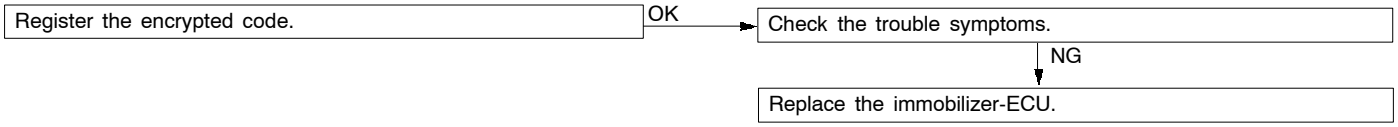


Purchased from www.WorkshopManuals.co.uk

www.WorkshopManuals.co.uk

## INSPECTION PROCEDURES FOR EACH TROUBLE SYMPTOM

| Trouble Symptom | Inspection procedure No. | Reference page |
|---|---|---|
| Communication with MUT-II is not possible. | – | GROUP 13B, 13C - Trouble-shooting |
| Diagnosis code No. 54 is generated by the engine-A/T-ECU <6G74-A/T> or by the engine-ECU <6G74-M/T, 4M41>. | 1 | 54A-8 |
| The ignition keys cannot be registered using the MUT-II. | 2 | 54A-9 |
| The engine does not start.(The engine cranks but does not fire.) | 3 | 54A-9 |
| Immobilizer-ECU power supply and earth circuit system check | 4 | 54A-10 |

## INSPECTION PROCEDURES FOR EACH TROUBLE SYMPTOM

### Inspection procedure 1

| **Diagnosis code No. 54 is generated by the engine-A/T-ECU <6G74-A/T> or by the engine-ECU <6G74-M/T, 4M41>.** | **Probable cause** |
|---|---|
| The cause is probably a problem with communication between the engine-A/T-ECU <6G74-A/T> or engine-ECU <6G74-M/T, 4M41> and the immobilizer-ECU. | ● Malfunction of harness or connector<br>● Malfunction of engine-A/T-ECU <6G74-A/T> or engine-ECU <6G74-M/T, 4M41><br>● Malfunction of immobilizer-ECU<br>● Malfunction of ignition key<br>● The ignition key has not been registered with the immobilizer-ECU. |

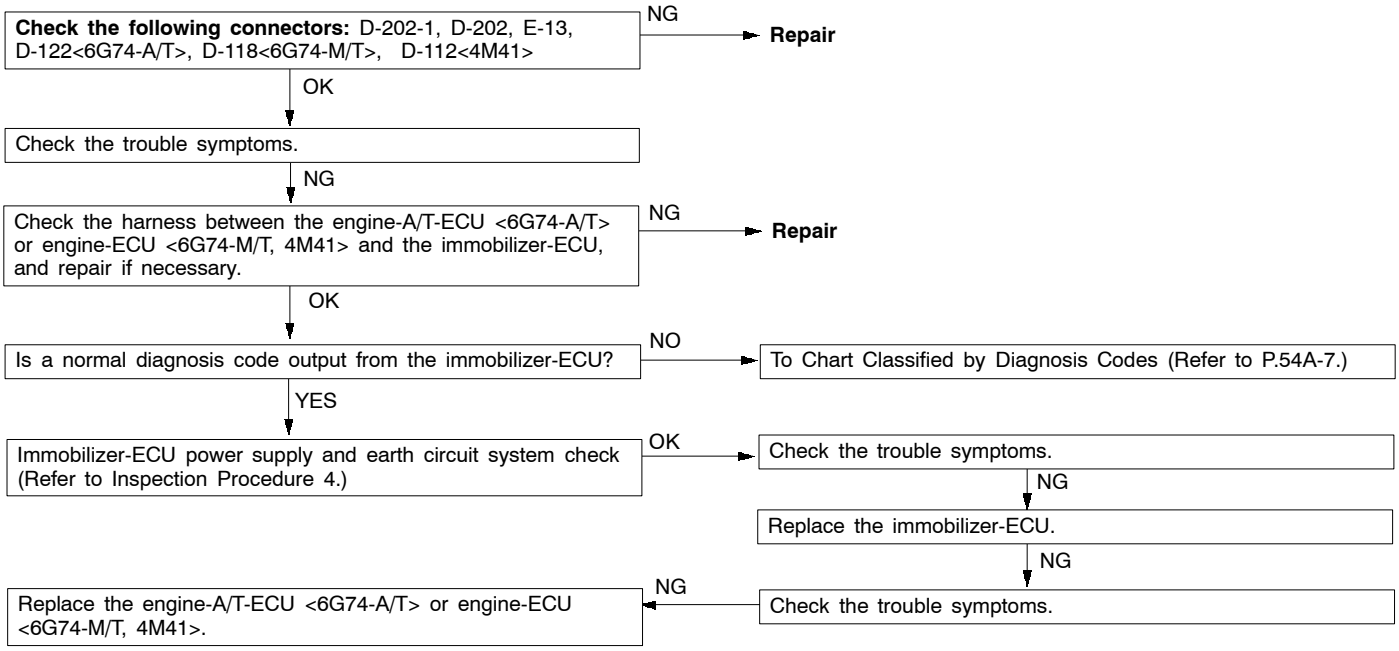


Purchased from www.WorkshopManuals.co.uk

www.WorkshopManuals.co.uk

## Inspection procedure 2

| The ignition keys cannot be registered using the MUT-II. | Probable cause |
|---|---|
| The ignition key has not been registered with the immobilizer-ECU. Or that thee is a problem with the immobilizer-ECU. | • Malfunction of ignition key<br>• Malfunction of harness or connector<br>• Malfunction of immobilizer-ECU |

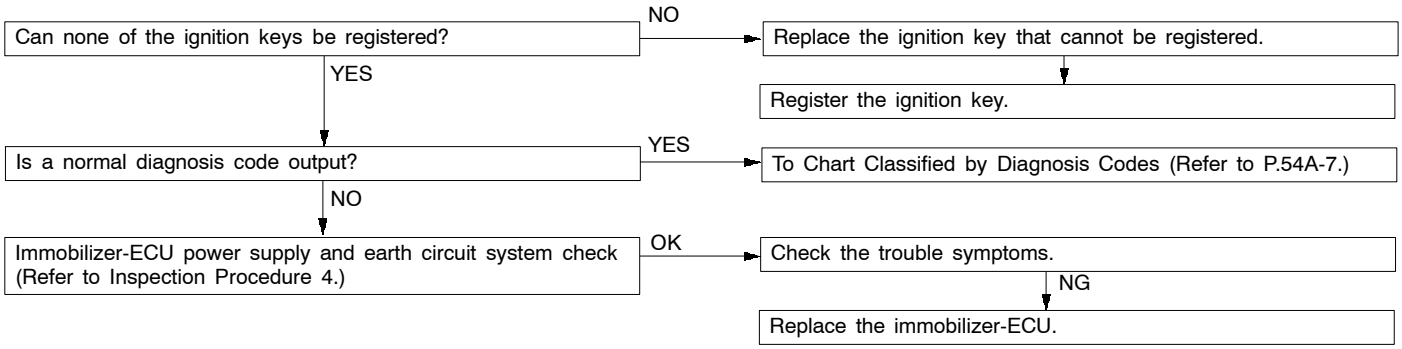


## Inspection procedure 3

| The engine does not start.<br>(The engine cranks but does not fire.) | Probable cause |
|---|---|
| If the fuel injection does not operate, the cause is probably a problem with the immobilizer-ECU, or it could also be a problem with the GDI system or the DIESEL system. If an attempt has been made to start the engine with a key that has not been properly registered, the above symptom is a sign of normal operation. | • Malfunction of GDI system or Diesel fuel system<br>• Malfunction of immobilizer-ECU |

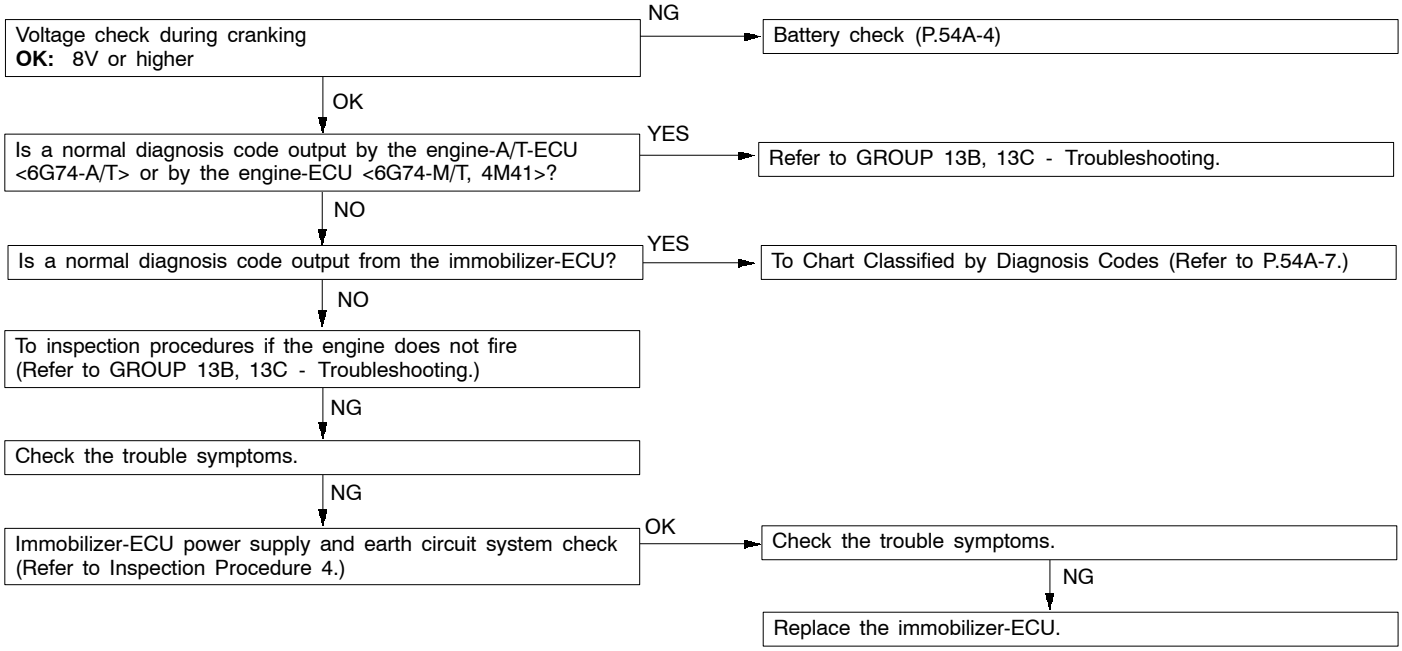


Purchased from www.WorkshopManuals.co.uk

www.WorkshopManuals.co.uk

### Inspection procedure 4

**Immobilizer-ECU power supply and earth circuit system check**

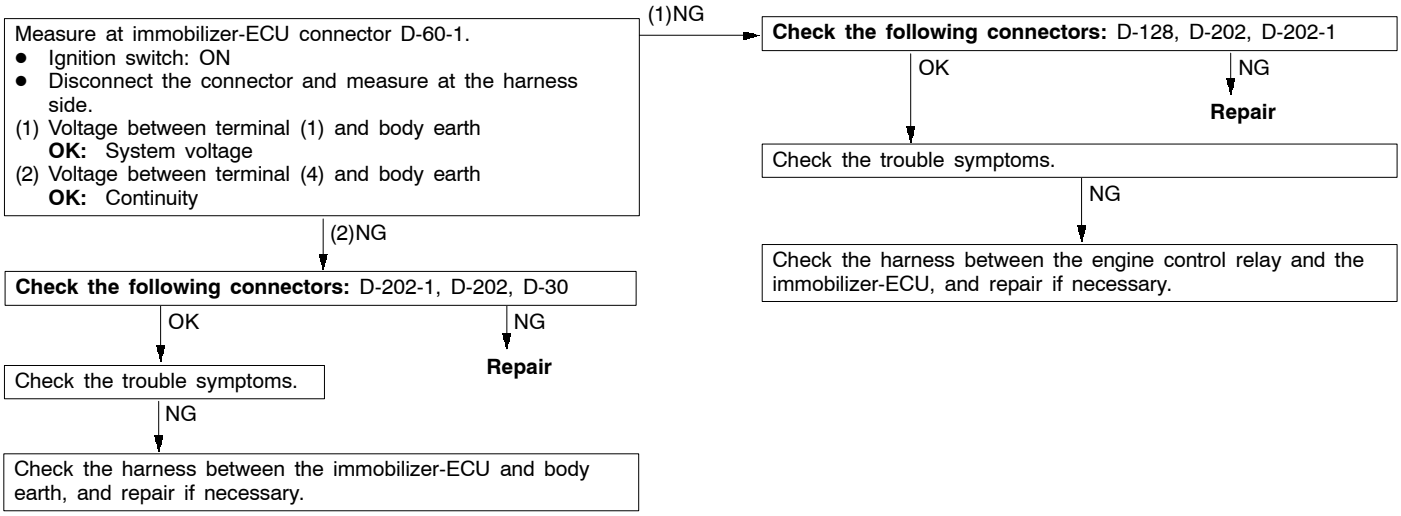


# IMMOBILIZER-ECU CHECK

## TERMINAL VOLTAGE CHECK TABLE

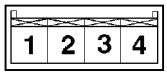


X1185CA

| Terminal No. | Signal | Inspection conditions | Terminal voltage |
|---|---|---|---|
| 1 | Immobilizer-ECU power supply | Ignition switch: ON | System voltage |
| 2 | - | - | - |
| 3 | Engine-A/T-ECU <6G74·A/T>, Engine-ECU <6G74·M/T, 4M41> | - | - |
| 4 | Immobilizer-ECU earth | At all times | 0V |

Purchased from www.WorkshopManuals.co.uk

www.WorkshopManuals.co.uk

# IGNITION SWITCH AND IMMOBILIZER-ECU

## REMOVAL AND INSTALLATION

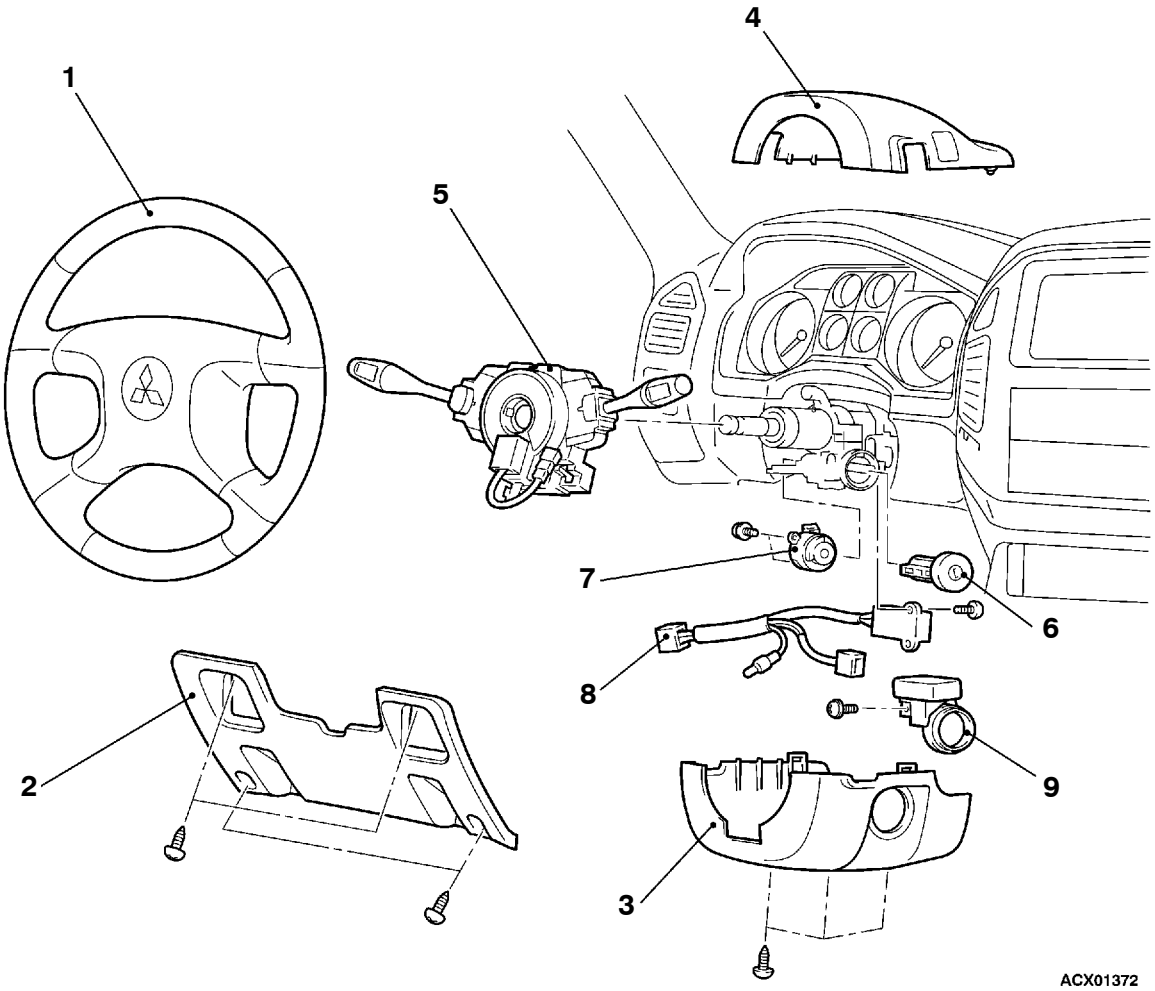


**Removal steps**

1. Steering wheel (Refer to GROUP 37A.)
2. Instrument panel under cover (Refer to GROUP 52A - Instrument Panel.)
3. Lower column cover (Refer to GROUP 52A - Instrument Panel.)
4. Upper column cover (Refer to GROUP 52A - Instrument Panel.)
5. Column Switch
6. Steering lock cylinder ◀A▶
7. Ignition switch
8. Key Reminder Switch
9. Immobilizer-ECU

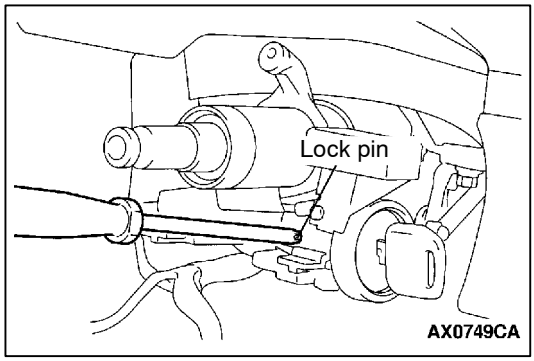


## REMOVAL SERVICE POINTS

### ◀A▶ STEERING LOCK CYLINDER REMOVAL

1. Insert the key into the steering lock cylinder, and then turn the ignition switch to the ACC position.
2. While using a Phillips screwdriver (small) or similar tool to push the lock pin, remove the steering lock cylinder.

Purchased from www.WorkshopManuals.co.uk

www.WorkshopManuals.co.uk

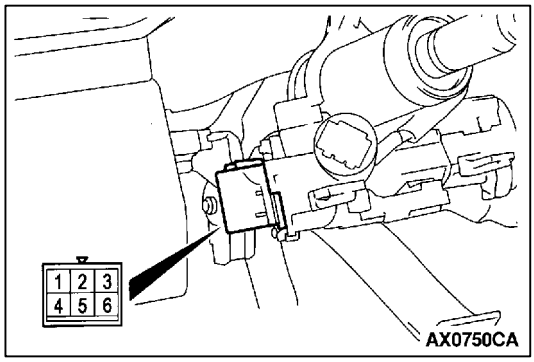


## INSPECTION

### IGNITION SWITCH CONTINUITY CHECK

With the ignition switch installed to the vehicle, disconnect and check the ignition switch connector.

| Ignition switch position | Terminal No. | | | | |
|---|---|---|---|---|---|
| | 1 | 2 | 4 | 5 | 6 |
| LOCK | | | | | |
| ACC | ○ | | | | ○ |
| ON | ○ | ○ | ○ | | ○ |
| START | ○ | ○ | | ○ | |

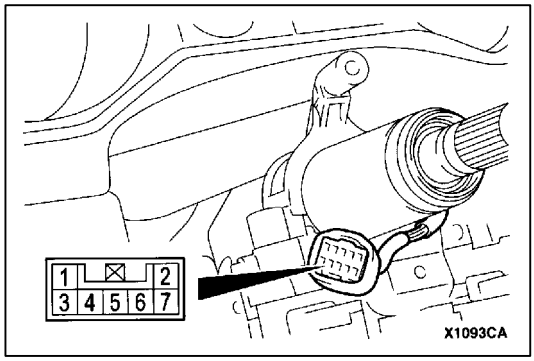


### KEY REMINDER SWITCH CONTINUITY CHECK

With the key reminder switch installed to the vehicle, disconnect and check the key reminder switch connector.

| Ignition key condition | Terminal No. | |
|---|---|---|
| | 4 | 6 |
| Removed | ○ | ○ |
| Inserted | | |

## ENCRYPTED CODE REGISTRATION METHOD AND RESETTING THE CODE TO THE FACTORY SETTING

Register the encrypted code in the immobilizer-ECU and then reset the code to the factory setting after parts have been replaced.

| Replacement part | Encrypted code |
|---|---|
| Ignition key | Necessary |
| Ignition key ring antenna and immobilizer-ECU | Necessary |
| Engine-ECU* | Necessary |

NOTE
* : If the engine-ECU is replaced, the ignition key ring antenna and immobilizer-ECU and ignition key should be replaced together with it.
Each engine-ECU has an individual information for immobilizer-ECU, and the individual information is registered in the immobilizer-ECU.

Purchased from www.WorkshopManuals.co.uk

www.WorkshopManuals.co.uk

## ENCRYPTED CODE REGISTRATION METHOD

If using an ignition key that has just been newly purchased, or if the immobilizer-ECU has been replaced, you will need to register the encrypted codes for each ignition key being used into the immobilizer-ECU. (A maximum of eight different encrypted codes can be registered.)
Moreover, when the immobilizer-ECU has been replaced, you will need to use the MUT-II to register the password that the user specifies into the immobilizer-ECU. (Refer to the MUT-II instruction manual for instructions on using the MUT-II.)

**Caution**
**Because registering of the encrypted codes is carried out after all previously-registered codes have been erased, you should have ready all of the ignition keys that have already been registered.**

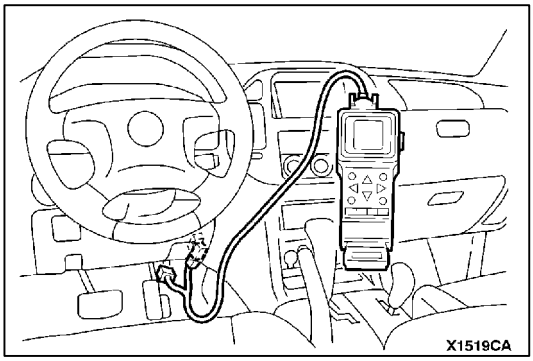


1. Connect the MUT-II to the diagnosis connector.

   **Caution**
   **Turn the ignition switch to the LOCK (OFF) before connecting or disconnecting of the MUT-II.**

2. Check that diagnosis code No.54 is not set by the engine-ECU. If it is set, check according to the Troubleshooting Procedures. (Refer to GROUP 13A - Troubleshooting.)
3 Use the ignition key that is to be registered to turn on the ignition switch.
4. Use the MUT-II to register the encrypted code. If you are registering two or more codes, use the next key to the registered to turn on the ignition switch without disconnecting the MUT-II.
5. Turn the ignition switch to the LOCK (OFF) position.
6. Check that the engine can be started with each of the ignition keys.
7. Check the diagnosis output from the engine-ECU, and erase code No.54 if it appears. (Refer to GROUP 13A - Troubleshooting.)
8. Disconnect the MUT-II. This completes the registration operation.

Purchased from www.WorkshopManuals.co.uk

www.WorkshopManuals.co.uk

# IGNITION SWITCH AND IMMOBILIZER<4D56>

## SPECIAL TOOLS

| Tools | No. | Name | Application |
|---|---|---|---|
| 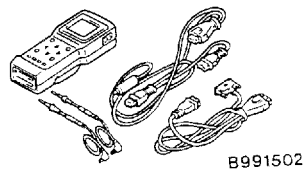  | MB991502 | MUT-II Sub assembly | Checking the ETACS-ECU input signals |
| 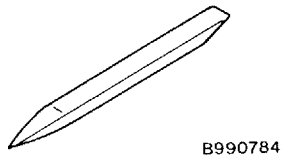  | MB990784 | Ornament remover | Instrument panel under cover and column cover removal |

## TROUBLESHOOTING

### IGNITION SWITCH

The ignition switch is controlled by the Smart Wiring System (SWS), for troubleshooting procedures, refer to GROUP 54B.

### IMMOBILIZER

### BASIC FLOW OF PROBLEM DIAGNOSIS

Refer to GROUP 00 - How to Use Troubleshooting/Inspection Service Points.

### DIAGNOSIS FUNCTION

#### READING DIAGNOSIS CODES

The diagnosis codes can be read using the MUT-II or by using the Simple Check Diagnosis mode. (Refer to GROUP 00 - How to Use Troubleshooting/Inspection Service Points.)

NOTE
Connect the MUT-II to the 16-pin diagnosis connector (black).

#### DIAGNOSIS CODE MEMORY ERASING PROCEDURE

Refer to GROUP 00 - How to Use Troubleshooting/Inspection Service Points.

#### INSPECTION USING SIMPLE CHECK DIAGNOSIS MODE

1. Change to Simple Check Diagnosis mode and activate switch diagnosis mode. (Refer to GROUP 00 - How to Use Troubleshooting/Inspection Service Points.
2. In this condition, the input signals for the following switches can be checked.

### CHART CLASSIFIED BY DIAGNOSIS CODES

| Code No. | Diagnosis contents | Reference page |
|---|---|---|
| 11 | Problem related to communication with the ignition key | 54A-15 |
| 12 | Ignition key is not registered, or encrypted code from ignition key does not match. | 54A-15 |

Purchased from www.WorkshopManuals.co.uk

www.WorkshopManuals.co.uk

## INSPECTION PROCEDURES FOR EACH DIAGNOSIS CODE

| Code No. 11 Problem related to communication with the ignition key | Probable cause |
|---|---|
| When the ignition switch is at the ON position, the encrypted codes are not transmitted from the ignition key to the immobilizer-ECU. | • Malfunction of ignition key<br>• Malfunction of immobilizer-ECU<br>• Malfunction of harness or connector |

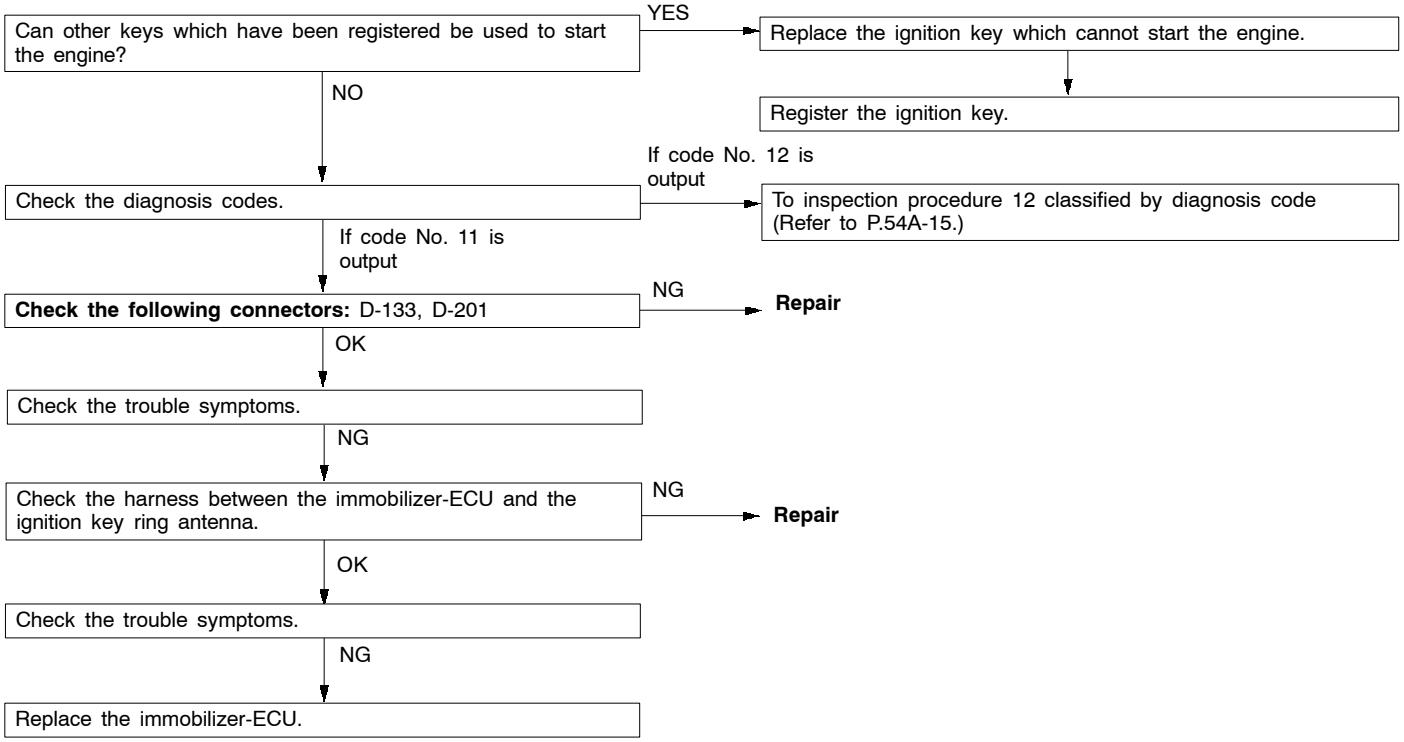


| Code No. 12 Ignition key is not registered, or encrypted code from ignition key does not match. | Probable cause |
|---|---|
| The ignition key has not been registered with the immobilizer-ECU. | • The ignition key has not been registered with the immobilizer-ECU.<br>• Malfunction of immobilizer-ECU |

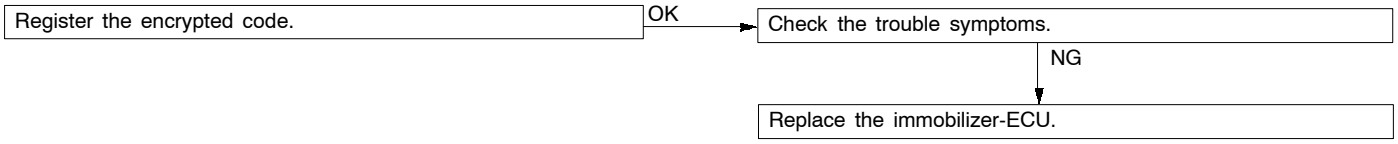


## INSPECTION PROCEDURES FOR EACH TROUBLE SYMPTOM

| Trouble Symptom | Inspection procedure No. | Reference page |
|---|---|---|
| Communication with MUT-II is not possible. | – | GROUP 13B, 13C - Trouble-shooting |
| The ignition keys cannot be registered using the MUT-II. | 1 | 54A-16 |
| The engine does not start. (The engine cranks but does not fire.) | 2 | 54A-17 |
| Immobilizer-ECU power supply and earth circuit system check | 3 | 54A-18 |

Purchased from www.WorkshopManuals.co.uk

www.WorkshopManuals.co.uk

## INSPECTION PROCEDURES FOR EACH TROUBLE SYMPTOM

### Inspection procedure 1

| The ignition keys cannot be registered using the MUT-II. | Probable cause |
|---|---|
| The ignition key has not been registered with the immobilizer-ECU. Or that there is a problem with the immobilizer-ECU. | • Malfunction of ignition key<br>• Malfunction of harness or connector<br>• Malfunction of immobilizer-ECU |

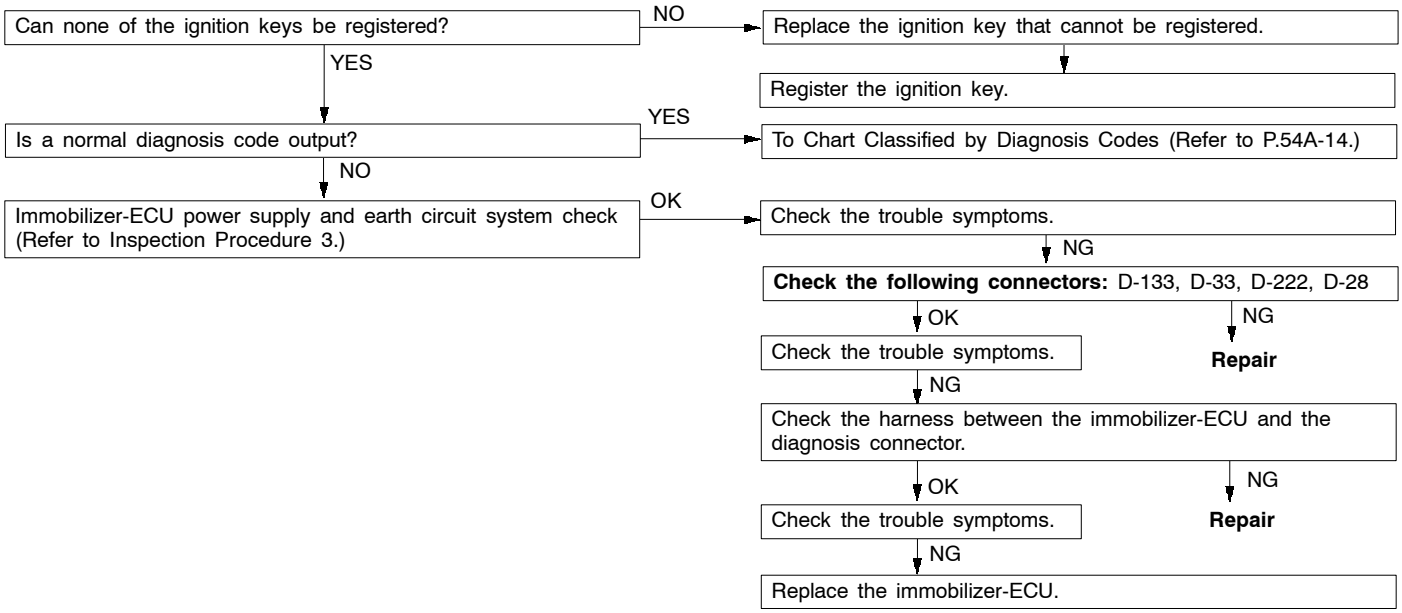


Purchased from www.WorkshopManuals.co.uk

www.WorkshopManuals.co.uk

## Inspection procedure 2

| The engine does not start.<br>(The engine cranks but does not fire.) | Probable cause |
|---|---|
| If the fuel injection does not operate, the cause is probably a problem with the immobilizer-ECU, or it could also be a problem with the diesel fuel system. If an attempt has been made to start the engine with a key that has not been properly registered, the above symptom is a sign of normal operation. | • Malfunction of diesel fuel system<br>• Malfunction of immobilizer-ECU |

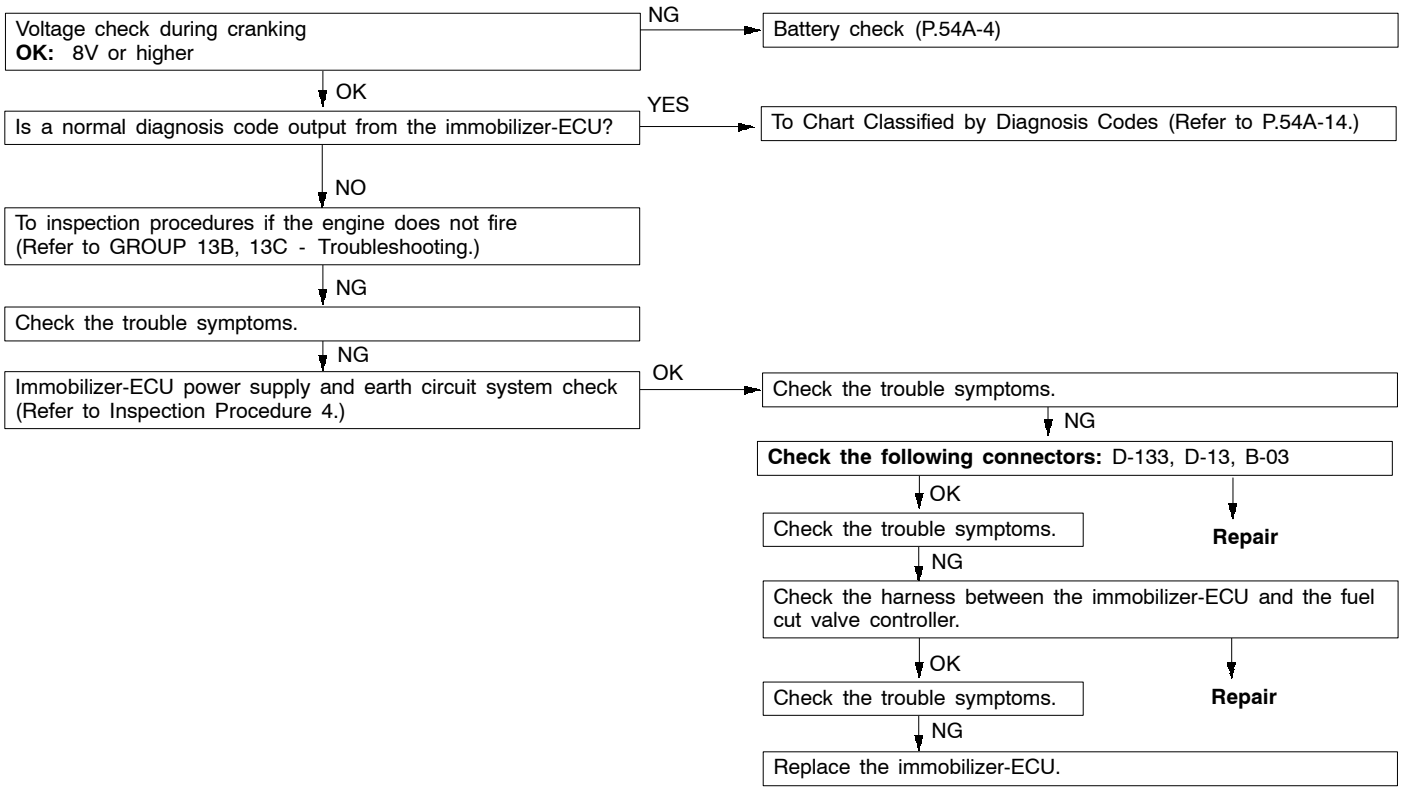


Purchased from www.WorkshopManuals.co.uk

www.WorkshopManuals.co.uk

### Inspection procedure 3

**Immobilizer-ECU power supply and earth circuit system check**

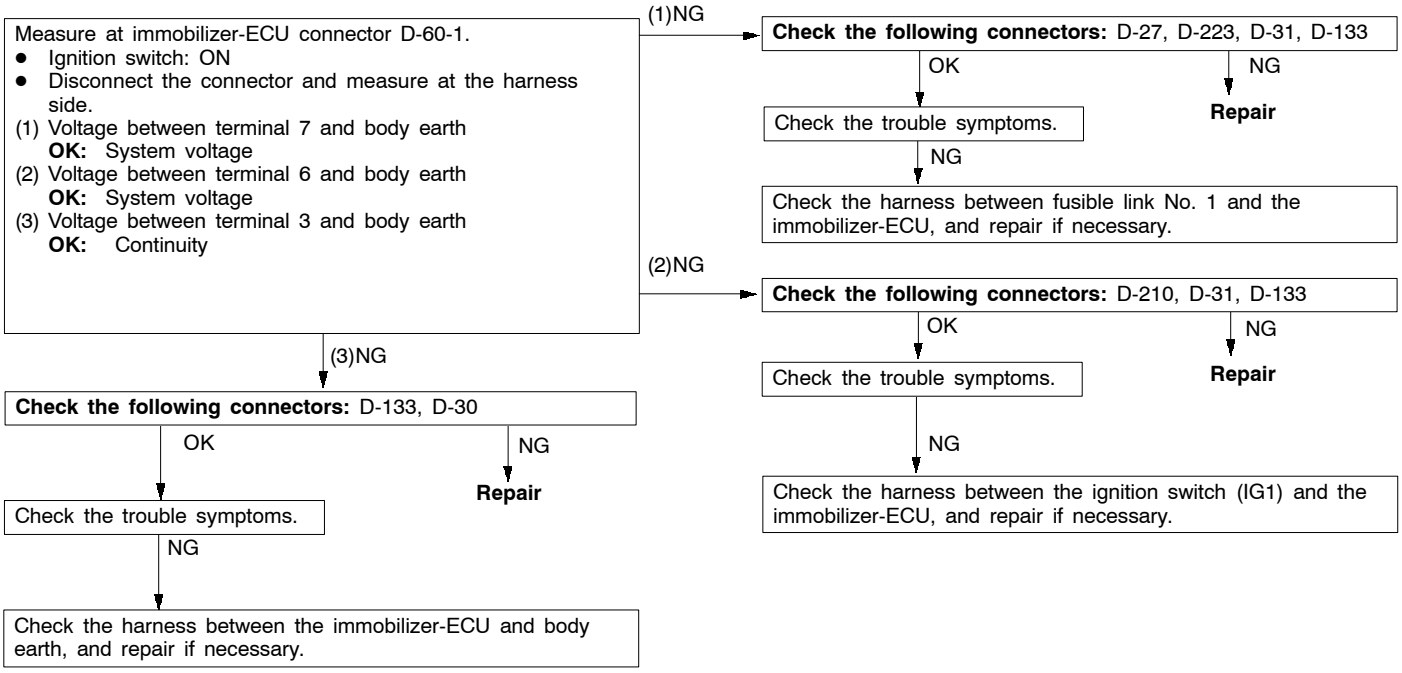


# IMMOBILIZER-ECU CHECK

## TERMINAL VOLTAGE CHECK TABLE

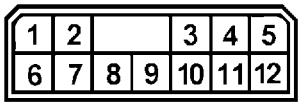


ACX01564 AB

| Terminal No. | Signal | Inspection conditions | Terminal voltage |
|---|---|---|---|
| 1 | Diagnosis connector | - | - |
| 2 | - | - | - |
| 3 | Immobilizer-ECU earth | Always | 0 V |
| 4 | - | - | - |
| 5 | Engine-ECU | - | - |
| 6 | Ignition switch (IG1) power supply | Ignition switch : ON | System voltage |
| 7 | Immobilizer-ECU power supply | Always | System voltage |
| 8, 9 | - | - | - |
| 10 | Ignition key ring antenna | - | - |
| 11 | Ignition key ring antenna | - | - |
| 12 | Diagnosis connector | - | - |

Purchased from www.WorkshopManuals.co.uk

www.WorkshopManuals.co.uk

# IGNITION SWITCH AND IMMOBILIZER-ECU

## REMOVAL AND INSTALLATION

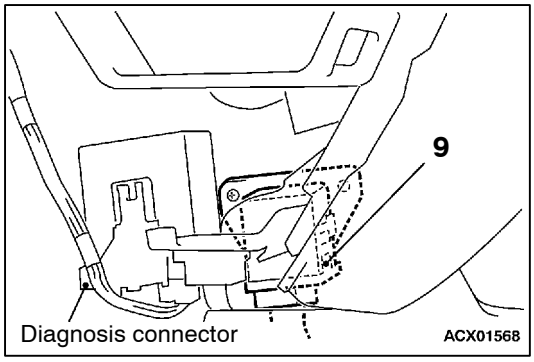


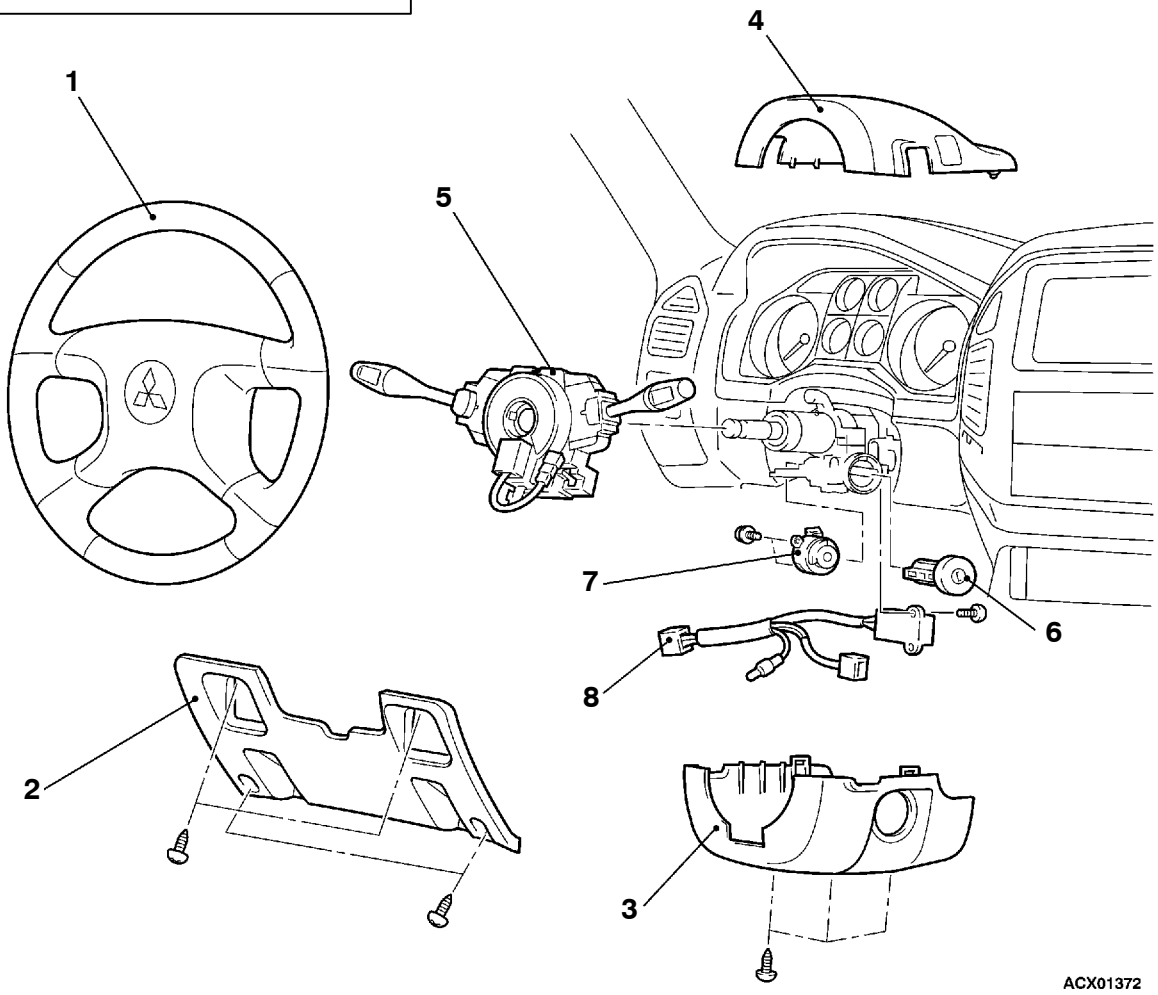


**Removal steps**

1. Steering wheel (Refer to GROUP 37A.)
2. Instrument panel under cover (Refer to GROUP 52A - Instrument Panel.)
3. Lower column cover (Refer to GROUP 52A - Instrument Panel.)

◀A▶

4. Upper column cover (Refer to GROUP 52A - Instrument Panel.)
5. Column Switch
6. Steering lock cylinder
7. Ignition switch
8. Key Reminder Switch
9. Immobilizer-ECU

Purchased from www.WorkshopManuals.co.uk

www.WorkshopManuals.co.uk

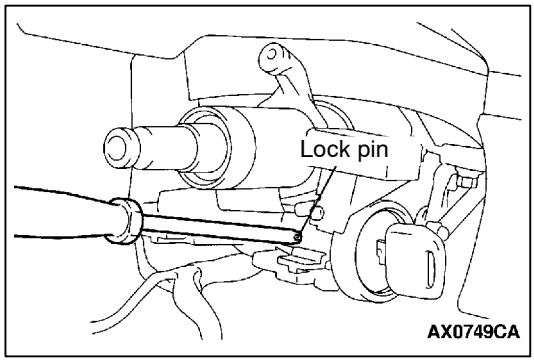


## REMOVAL SERVICE POINTS

### ◀A▶ STEERING LOCK CYLINDER REMOVAL

1. Insert the key into the steering lock cylinder, and then turn the ignition switch to the ACC position.
2. While using a Phillips screwdriver (small) or similar tool to push the lock pin, remove the steering lock cylinder.

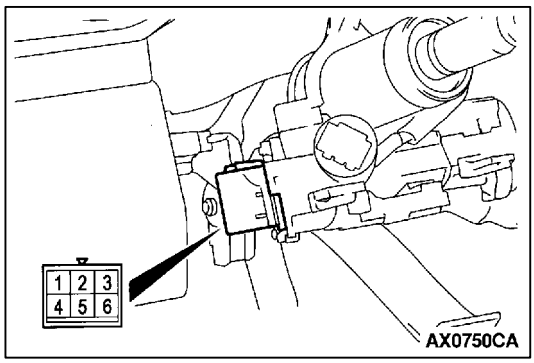


## INSPECTION

### IGNITION SWITCH CONTINUITY CHECK

With the ignition switch installed to the vehicle, disconnect and check the ignition switch connector.

| Ignition switch position | Terminal No. | | | | |
|---|---|---|---|---|---|
| | 1 | 2 | 4 | 5 | 6 |
| LOCK | | | | | |
| ACC | ○ | ─ | ─ | ─ | ○ |
| ON | ○ | ○ | ○ | ─ | ○ |
| START | ○ | ○ | ─ | ○ | ─ |

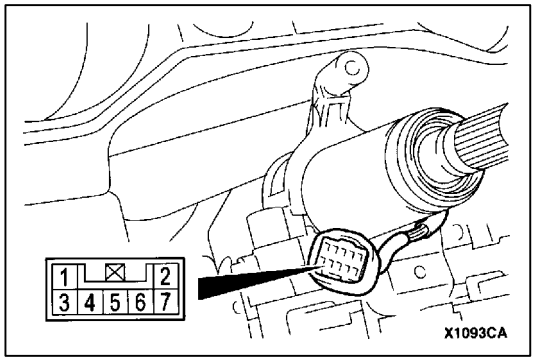


### KEY REMINDER SWITCH CONTINUITY CHECK

With the key reminder switch installed to the vehicle, disconnect and check the key reminder switch connector.

| Ignition key condition | Terminal No. | |
|---|---|---|
| | 4 | 6 |
| Removed | ○ | ○ |
| Inserted | | |

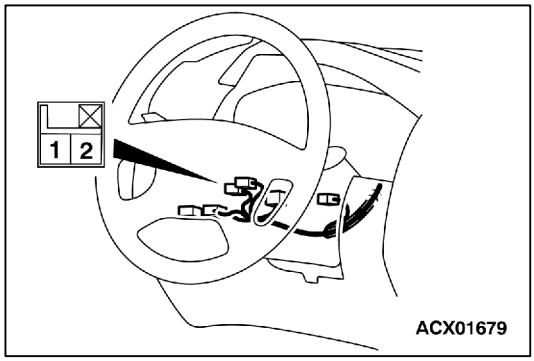


### IGNITION KEY RING ANTENNA CONTINUITY CHECK

Use a circuit tester to check the continuity between the terminals.

Purchased from www.WorkshopManuals.co.uk

www.WorkshopManuals.co.uk

## ENCRYPTED CODE REGISTRATION METHOD AND RESETTING THE CODE TO THE FACTORY SETTING

Register the encrypted code in the immobilizer-ECU and then reset the code to the factory setting after parts have been replaced.

| Replacement part | Encrypted code |
|---|---|
| Ignition key | Necessary |
| Ignition key ring antenna and immobilizer-ECU | Necessary |
| Engine-ECU* | Necessary |

NOTE
* : If the engine-ECU is replaced, the ignition key ring antenna and immobilizer-ECU and ignition key should be replaced together with it.
Each engine-ECU has an individual information for immobilizer-ECU, and the individual information is registered in the immobilizer-ECU.

### ENCRYPTED CODE REGISTRATION METHOD

If using an ignition key that has just been newly purchased, or if the immobilizer-ECU has been replaced, you will need to register the encrypted codes for each ignition key being used into the immobilizer-ECU. (A maximum of eight different encrypted codes can be registered.)
Moreover, when the immobilizer-ECU has been replaced, you will need to use the MUT-II to register the password that the user specifies into the immobilizer-ECU. (Refer to the MUT-II instruction manual for instructions on using the MUT-II.)

**Caution**
**Because registering of the encrypted codes is carried out after all previously-registered codes have been erased, you should have ready all of the ignition keys that have already been registered.**

Purchased from www.WorkshopManuals.co.uk

www.WorkshopManuals.co.uk

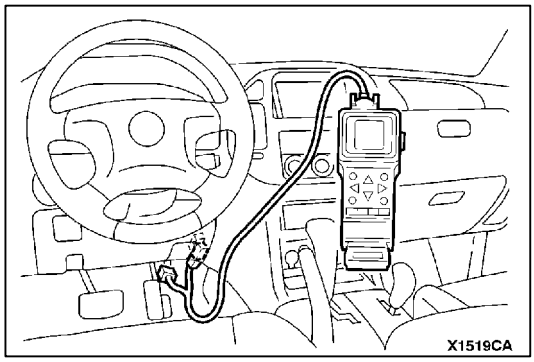


1. Connect the MUT-II to the diagnosis connector.

   **Caution**
   **Turn the ignition switch to the LOCK (OFF) before connecting or disconnecting of the MUT-II.**

2. Check that diagnosis code No.54 is not set by the engine-ECU. If it is set, check according to the Troubleshooting Procedures. (Refer to GROUP 13A - Troubleshooting.)
3 Use the ignition key that is to be registered to turn on the ignition switch.
4. Use the MUT-II to register the encrypted code. If you are registering two or more codes, use the next key to the registered to turn on the ignition switch without disconnecting the MUT-II.
5. Turn the ignition switch to the LOCK (OFF) position.
6. Check that the engine can be started with each of the ignition keys.
7. Check the diagnosis output from the engine-ECU, and erase code No.54 if it appears. (Refer to GROUP 13A - Troubleshooting.)
8. Disconnect the MUT-II. This completes the registration operation.

Purchased from www.WorkshopManuals.co.uk

www.WorkshopManuals.co.uk

# COMBINATION METER

## SERVICE SPECIFICATIONS

| Item | | | Standard value | Limit |
|---|---|---|---|---|
| Speedometer indication range km/h | At 20 km/h | | 18 - 23 | – |
| | At 40 km/h | | 37 - 45 | – |
| | At 80 km/h | | 75 - 88 | – |
| | At 120 km/h | | 113 - 132 | – |
| | At 160 km/h | | 150 - 176 | – |
| Speedometer needle swing km/h (when driving at 35 km/h or higher) | | | – | ± 3 |
| Tachometer indication error r/min | When engine speed is 700 r/min | | ± 120 | – |
| | When engine speed is 2,000 r/min | Petrol | -175+225 | – |
| | | Diesel | ±175 | – |
| | When engine speed is 3,000 r/min | Petrol | -175+300 | – |
| | | Diesel | ± 225 | – |
| | When engine speed is 4,000 r/min | Petrol | -225+375 | – |
| | | Diesel | ± 300 | – |
| | When engine speed is 4,750 r/min <Diesel vehicles> | | ± 260 | – |
| | When engine speed is 5,000 r/min <Petrol vehicles> | | -225+425 | – |
| | When engine speed is 6,000 r/min <Petrol vehicles> | | -225+475 | – |
| Fuel gauge unit standard resistance value Ω | F position | | 3 | – |
| | E position | | 110 | – |
| Fuel gauge unit float height mm | F position | | 11.9 | – |
| | E position | | 195.2 | – |
| Engine coolant temperature gauge unit standard resistance value Ω | | | 104 ± 13.5 | – |
| Combination meter internal resistance value Ω (Measured at connector D-38 and connector D-40) | 62 - 11 (IG power supply - earth) | | 1MΩ or more | – |
| | 62 - 25 (IG power supply - earth) | | 1MΩ or more | – |
| | 62 - 63 (IG power supply - fuel gauge) | | 1MΩ or more | – |
| | 62 - 64 (IG power supply - engine coolant temperature gauge) | | 1MΩ or more | – |
| | 63 - 11 (fuel gauge - earth) | | 180 | – |
| | 63 - 25 (fuel gauge - earth) | | 180 | – |
| | 64 - 11 (engine coolant temperature gauge - earth) | | 210 | – |
| | 64 - 25 (engine coolant temperature gauge - earth) | | 210 | – |
| | 67 - 11 (battery power supply - earth) | | 1MΩ or more | – |
| | 67 - 25 (battery power supply - earth) | | 1MΩ or more | – |
| | 67 - 63 (battery power supply - fuel gauge) | | 1MΩ or more | – |
| | 67 - 64 (battery power supply - engine coolant temperature gauge) | | 1MΩ or more | – |

Purchased from www.WorkshopManuals.co.uk

www.WorkshopManuals.co.uk

# SEALANTS

| Usage location | Brand |
|---|---|
| Engine coolant temperature gauge unit | Semi-drying sealant:<br>Threebond 1104 [0110207], Threebond 1141E (Manufactured by Threebond) |

NOTE
Numbers in [ ] indicate genuine parts numbers.

# SPECIAL TOOLS

| Tools | No. | Name | Application |
|---|---|---|---|
| A<br>B<br>C<br>D<br> 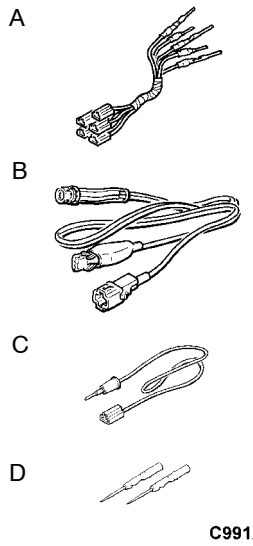 <br>C991223 | MB991223<br>A: MB991219<br>B: MB991220<br>C: MB991221<br>D: MB991222 | Harness set<br>A: Check harness<br>B: LED harness<br>C: LED harness adapter<br>D: Probe | Fuel gauge simple checking<br>Engine coolant temperature gauge simple checking<br>A: For checking contact pin contact pressure<br>B: For checking the power supply<br>C: For checking the power supply<br>D: For checking the power supply circuit |
| 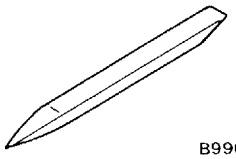 <br>B990784 | MB990784 | Ornament remover | Meter bezel removal |

# TROUBLESHOOTING

## DIAGNOSIS FUNCTION

### Input signal check procedure

1. Connect the MUT-II or a voltage meter to the diagnosis connector, and check the input. (Refer to GROUP 00 - How to Use Troubleshooting/Inspection Service Points.)
2. The vehicle speed sensor input signal can be checked.

   NOTE
   If the vehicle speed sensor input signal cannot be checked using the MUT-II, the cause is probably a malfunction of the diagnosis circuit system.

Purchased from www.WorkshopManuals.co.uk

www.WorkshopManuals.co.uk

## CHART CLASSIFIED BY TROUBLE SYMPTOMS

| Trouble Symptom | Inspection procedure No. | Reference page |
|---|---|---|
| Speedometer does not operate. (Other meters and gauges operate.) | 1 | 54A-25 |
| Tachometer does not operate. (Other meters and gauges operate.) | 2 | 54A-26 |
| Fuel gauge does not operate. (Other meters and gauges operate.) | 3 | 54A-27 |
| Engine coolant temperature gauge does not operate. (Other meters and gauges operate.) | 4 | 54A-28 |
| None of the meters and gauges operate. | 5 | 54A-29 |

## INSPECTION PROCEDURES FOR EACH TROUBLE SYMPTOM

### Inspection procedure 1

| **Speedometer does not operate. (Other meters and gauges operate.)** | **Probable cause** |
|---|---|
| The cause is probably a malfunction of the vehicle speed sensor input system. | • Malfunction of vehicle speed sensor<br>• Malfunction of harness or connector<br>• Malfunction of speedometer<br>• Malfunction of printed circuit board |

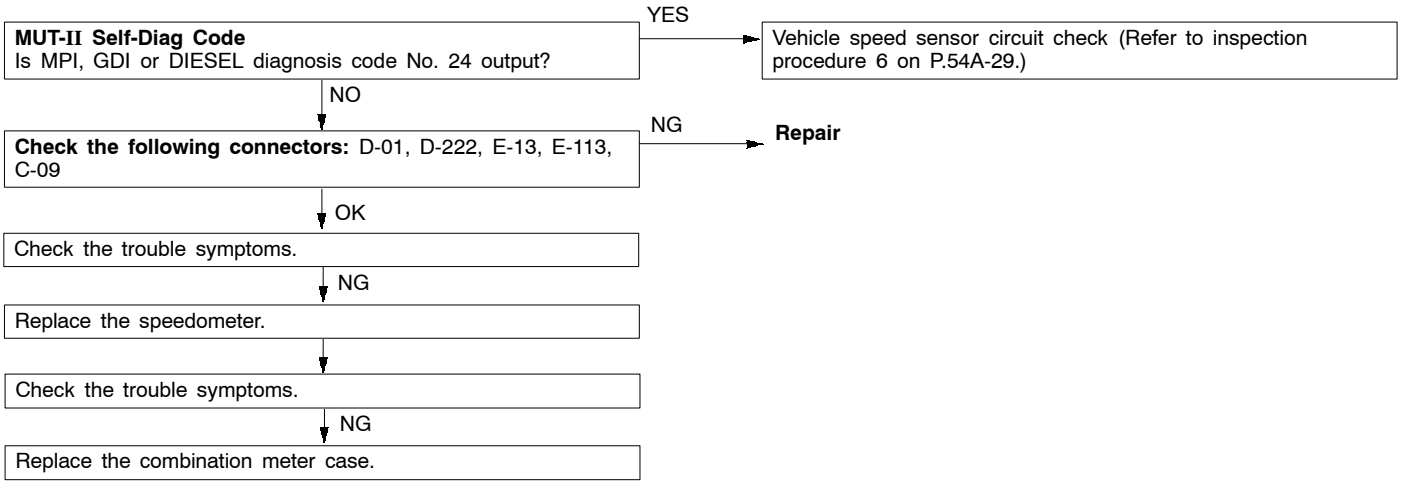


Purchased from www.WorkshopManuals.co.uk

www.WorkshopManuals.co.uk

## Inspection procedure 2

| Tachometer does not operate.(Other meters and gauges operate.) | Probable cause |
|---|---|
| The cause is probably that the ignition signal is not being input from the engine, or that there is a malfunction of the meter power supply or earth circuit. | ● Malfunction of tachometer<br>● Malfunction of harness or connector<br>● Malfunction of printed circuit board |

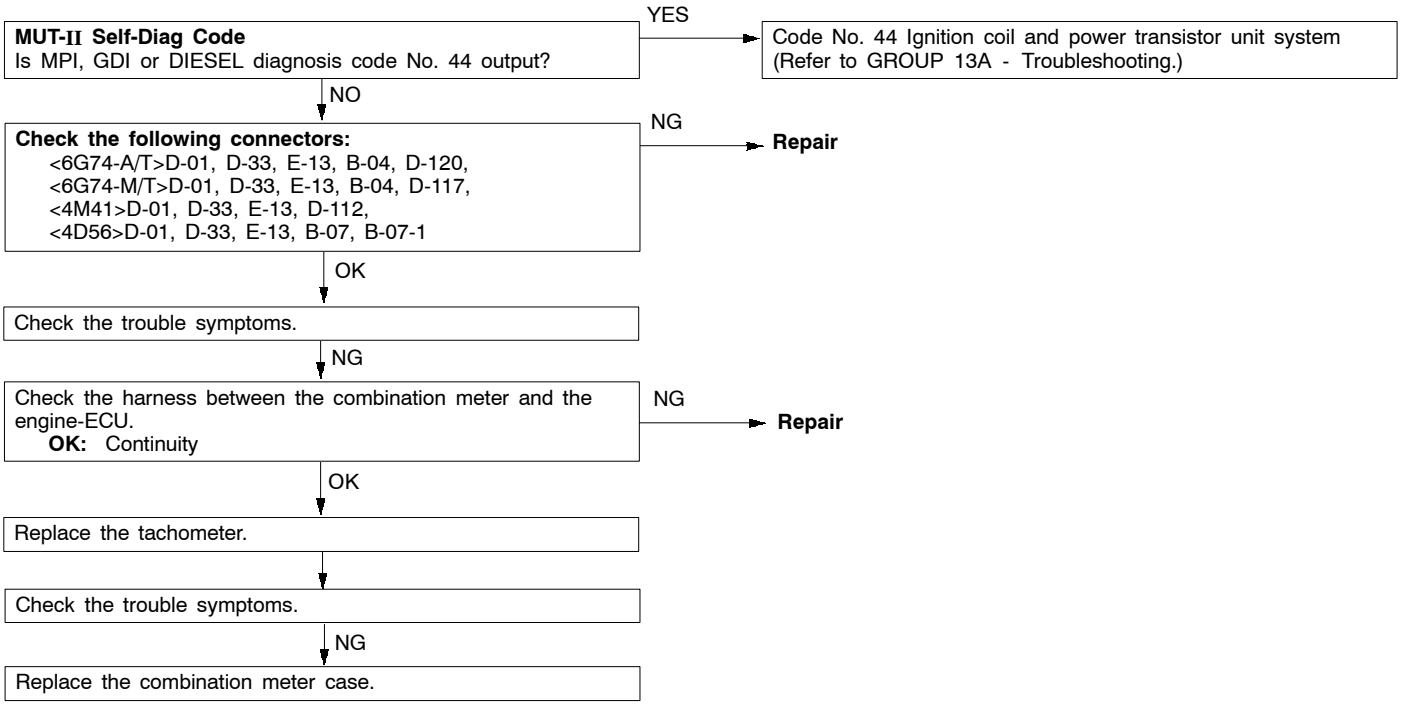


Purchased from www.WorkshopManuals.co.uk

www.WorkshopManuals.co.uk

## Inspection procedure 3

| Fuel gauge does not operate. (Other meters and gauges operate.) | Probable cause |
|---|---|
| If the speedometer and tachometer are normal, the harness from the power supply to the combination meter is normal. | ● Malfunction of fuel gauge unit<br>● Malfunction of fuel gauge and engine coolant temperature assembly<br>● Malfunction of harness or connector<br>● Malfunction of printed circuit board |

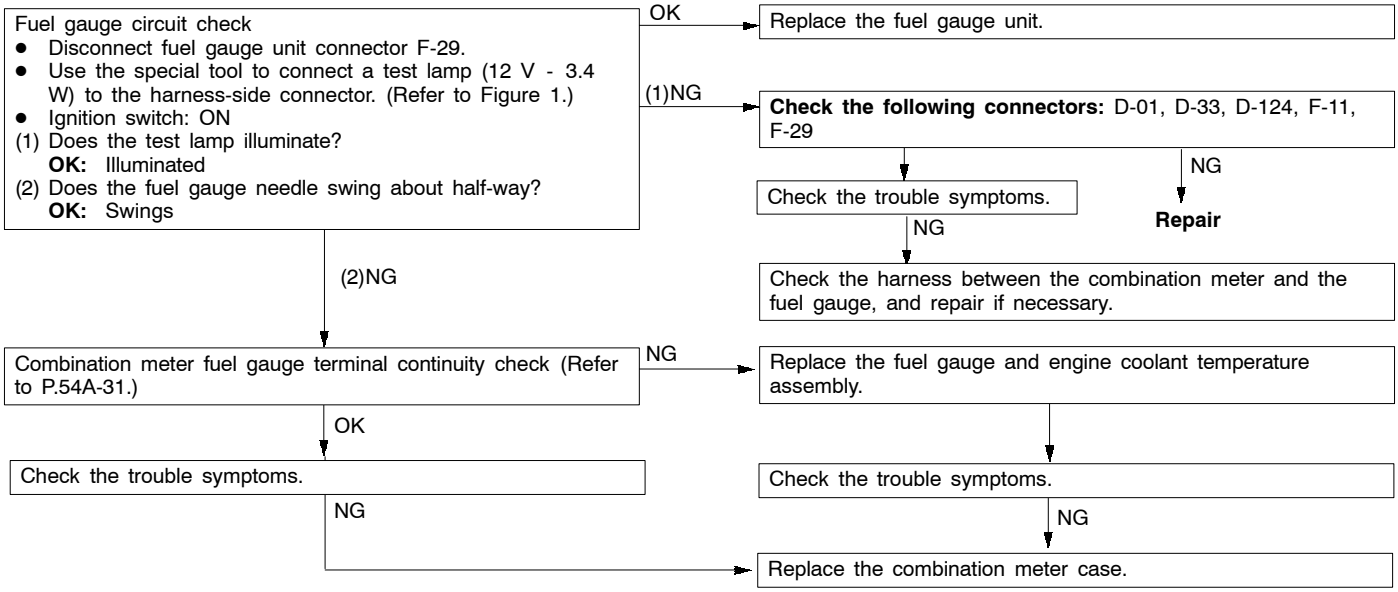


Fig. 1

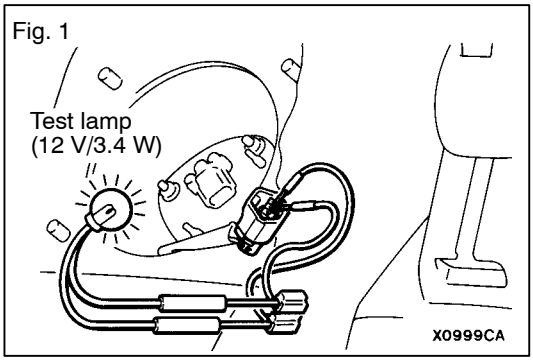


Purchased from www.WorkshopManuals.co.uk

www.WorkshopManuals.co.uk

## Inspection procedure 4

| Engine coolant temperature gauge does not operate. (Other meters and gauges operate.) | Probable cause |
|---|---|
| If the speedometer and tachometer are normal, the harness from the power supply to the combination meter is normal. | • Malfunction of engine coolant temperature gauge unit<br>• Malfunction of fuel gauge and engine coolant temperature assembly<br>• Malfunction of harness or connector<br>• Malfunction of printed circuit board |

Engine coolant temperature gauge circuit check
- Disconnect engine coolant temperature gauge unit connector <other than 4D56>B-50, <4D56>B-07-2.
- Connect a test lamp (12V - 4W) to the harness-side connector. (Refer to Figure 2, 3 and Figure 5.)
- Ignition switch: ON

(1) Does the test lamp illuminate?
**OK:** Illuminated
(2) Does the engine coolant temperature gauge needle swing about half-way?
**OK:** Swings

OK → Replace the engine coolant temperature gauge unit.

(1)NG → **Check the following connectors:** <other than 4D56> D-01, E-13, B-50
<4D56> D-01, E-13, B-07, B-07-2

OK → Check the trouble symptoms.
NG → Check the harness between the combination meter and the engine coolant temperature gauge, and repair if necessary.

NG → **Repair**

(2)NG → Engine coolant temperature gauge check (P.54A-32.)

NG → Replace the fuel gauge and engine coolant temperature assembly.

Check the trouble symptoms.

NG → Replace the combination meter case.

Fig. 2 <6G74-GDI>

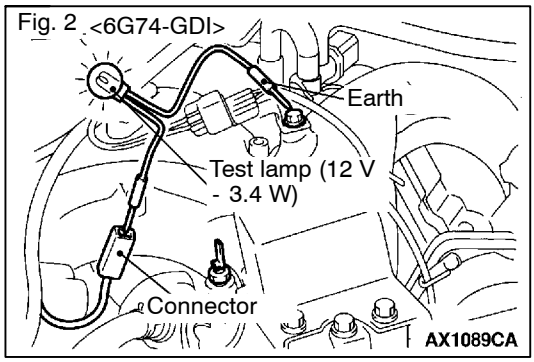


Fig. 3 <4D56>

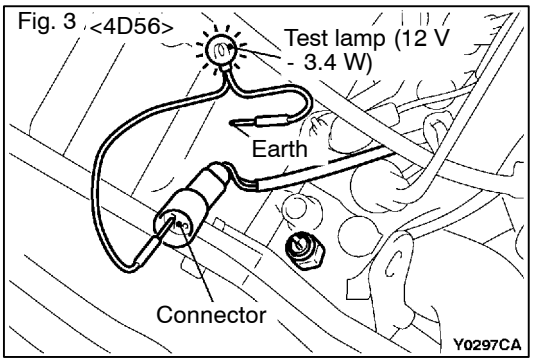


Figure 4 <4M41>

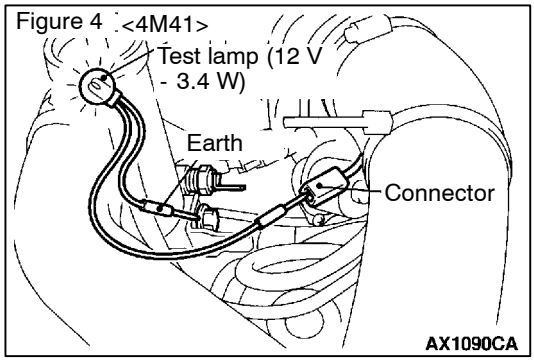


Purchased from www.WorkshopManuals.co.uk

www.WorkshopManuals.co.uk

## Inspection procedure 5

| None of the meters and gauges operate. | Probable cause |
|---|---|
| If the indicators and warning lamps are normal, then the harness from the power supply (IG1) to the combination meter is normal. | ● Malfunction of printed circuit board<br>● Malfunction of harness or connector |

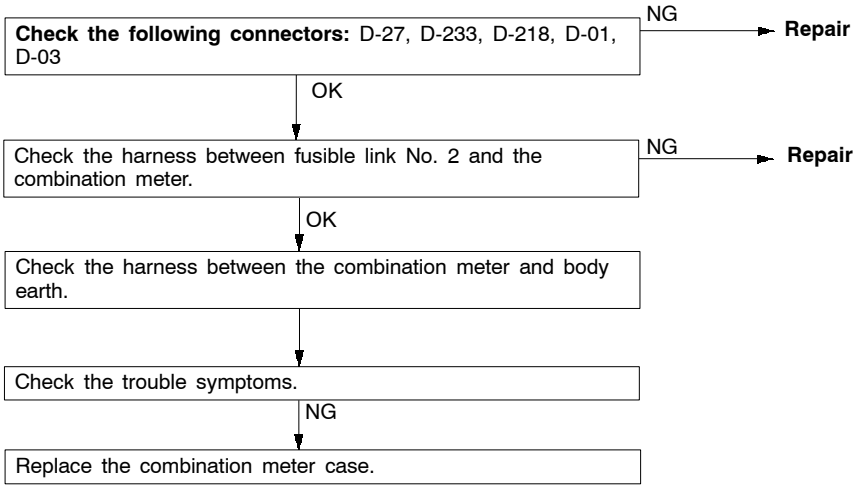


## Inspection procedure 6

| Vehicle speed sensor check |
|---|
| The vehicle speed sensor is used by the speedometer, engine-ECU and A/T-ECU. |

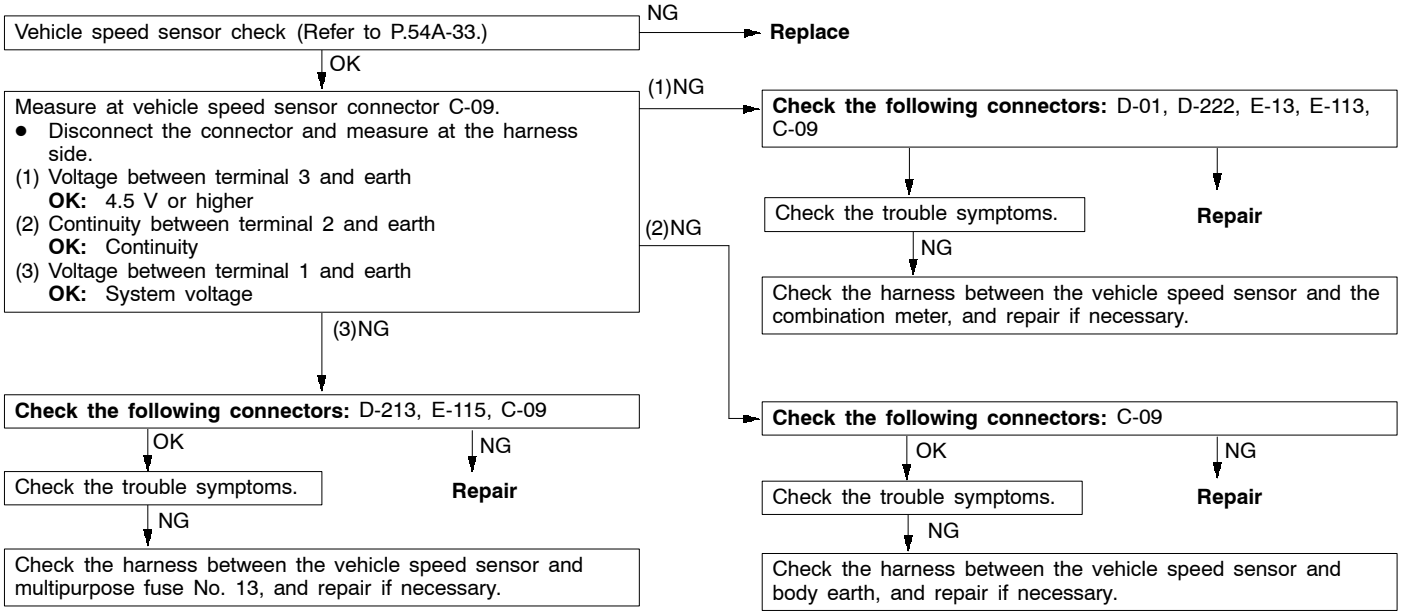


NOTE
If the trouble symptoms cannot be eliminated by the above checks, there is probably a short-circuit at the vehicle speed sensor output side (harness, speedometer, engine-ECU or A/T-ECU), and so this should be checked.

Purchased from www.WorkshopManuals.co.uk

www.WorkshopManuals.co.uk

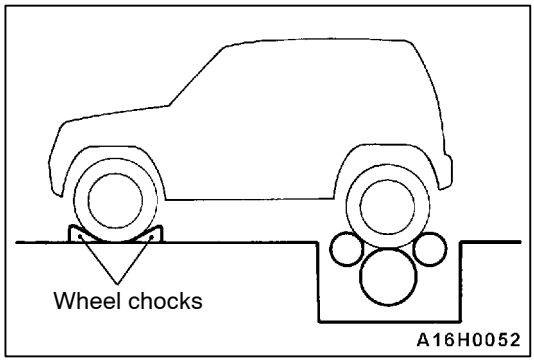


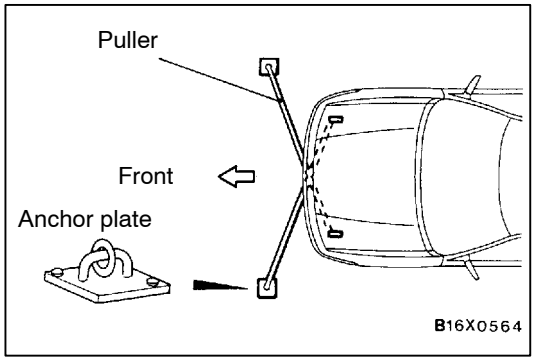


# ON-VEHICLE SERVICE

## SPEEDOMETER CHECK

1. Check that the tyre inflation pressure is at the value indicated on the tyre pressure labels.
2. Place the vehicle onto a speedometer tester.
3. Place wheel locks on front wheels.
   NOTE
   Set the vehicle to 2WD.
4. Install a puller to the towing hook and tie-down hook a the front of the vehicle to stop the front wheels from moving sideways, and secure both ends of the puller to anchor plates.
5. Connect a chain or wire cable to the rear towing hook and secure the other end to a strong, rigid support, to stop the vehicle from moving.
6. Check that the speedometer display range is within the standard value, and that the needle swing is within the limit value.

**Standard value:**

| Speed km/h | 20 | 40 | 80 | 120 | 160 |
|---|---|---|---|---|---|
| Speedometer display range km/h | 18 - 23 | 37 - 45 | 75 - 88 | 113 - 132 | 150 - 176 |

**Limit: Needle swing (driving at a speed of 35 km/h or higher) ± 3 km/h**

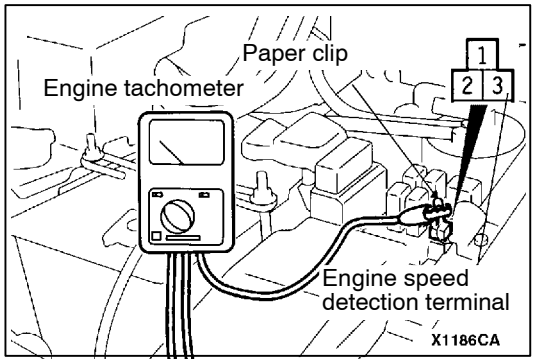


## TACHOMETER CHECK

1. Insert a paper clip into the harness-side engine speed detection terminal and connect an engine tachometer.
2. Compare the engine tachometer display and the vehicle tachometer display at various engine speeds, and check that the display errors are within the standard value ranges.

Purchased from www.WorkshopManuals.co.uk

www.WorkshopManuals.co.uk

**Standard value:**

| Engine speed r/min | | Tachometer display error r/min |
|---|---|---|
| 700 | | ± 120 |
| 2,000 | Petrol | -175+225 |
| | Diesel | ± 175 |
| 3,000 | Petrol | -175+300 |
| | Diesel | ± 225 |
| 4,000 | Petrol | -225+375 |
| | Diesel | ± 300 |
| 4,750 (Diesel) | | ± 260 |
| 5,000 (Petrol) | | -225+425 |
| 6,000 (Petrol) | | -225+475 |

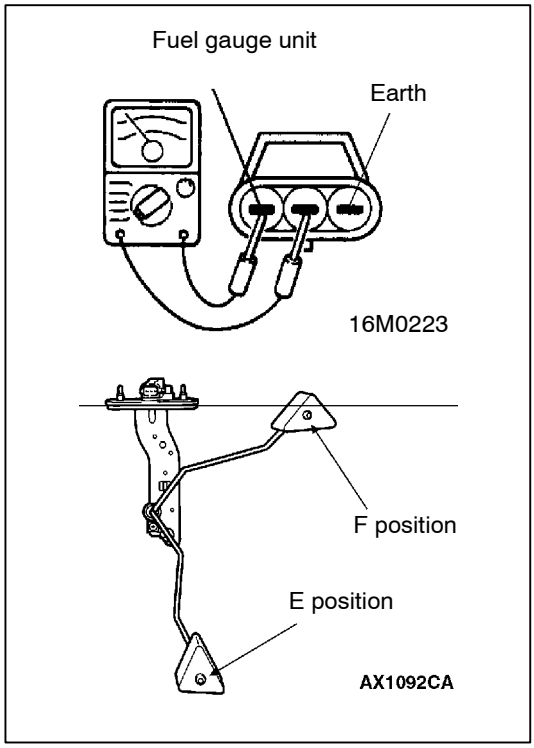


## FUEL GAUGE UNIT CHECK

Remove the fuel gauge unit from the fuel tank.

**Fuel gauge unit standard resistance value**

1. Check that the resistance between the fuel gauge unit terminal and the earth terminal is at the standard value when the float of the fuel gauge unit is at the F position and the E position.

   **Standard value:**

| Float position | Gauge resistance value |
|---|---|
| F position | 3 Ω |
| E position | 110 Ω |

2. Check that the resistance value changes smoothly when the float is moved slowly between the F position and the E position.

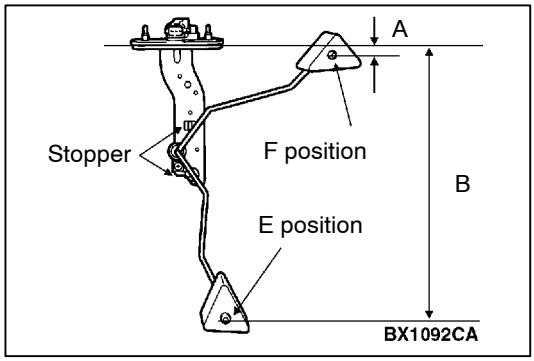


**Fuel gauge unit float height**

Move the float and check that F position height (A) and E position height (B) are at the standard values when the float arm touches the stopper.

**Standard value:**

| Float position | Float centre height |
|---|---|
| F position (A) | 11.9 mm |
| E position (B) | 195.2 mm |

Purchased from www.WorkshopManuals.co.uk

www.WorkshopManuals.co.uk

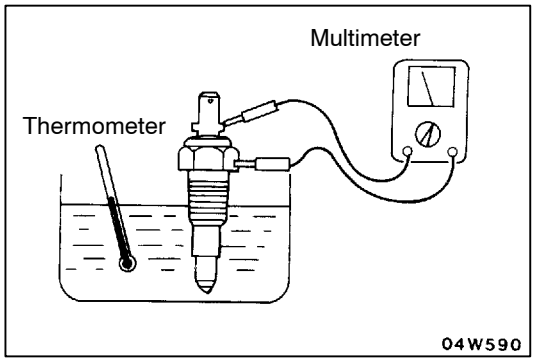


## ENGINE COOLANT TEMPERATURE GAUGE UNIT CHECK

1. Drain the engine coolant. (Refer to GROUP 14 - On-vehicle Service.)
2. Remove the engine coolant temperature gauge unit.
3. Immerse the engine coolant temperature gauge unit in water at a temperature of 70°C and check that the basic resistance is at within the standard value range.

   **Standard value: 104 ± 13.5 Ω**

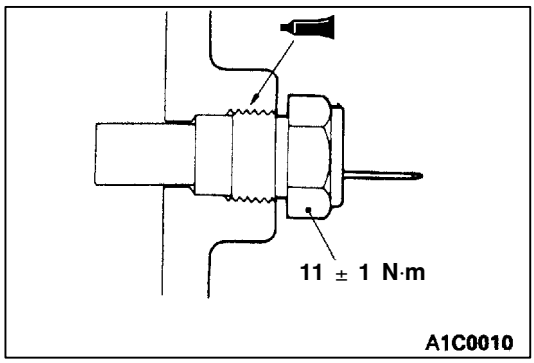


4. After checking, apply specified sealant to the threaded section of the engine coolant temperature gauge unit, and then tighten it to the specified torque.

   **Semi-drying sealant: Threebond 1104 or equivalent**

5. Refill the engine coolant. (Refer to GROUP 14 - On-vehicle Service.)

Purchased from www.WorkshopManuals.co.uk

www.WorkshopManuals.co.uk

# COMBINATION METER

## REMOVAL AND INSTALLATION

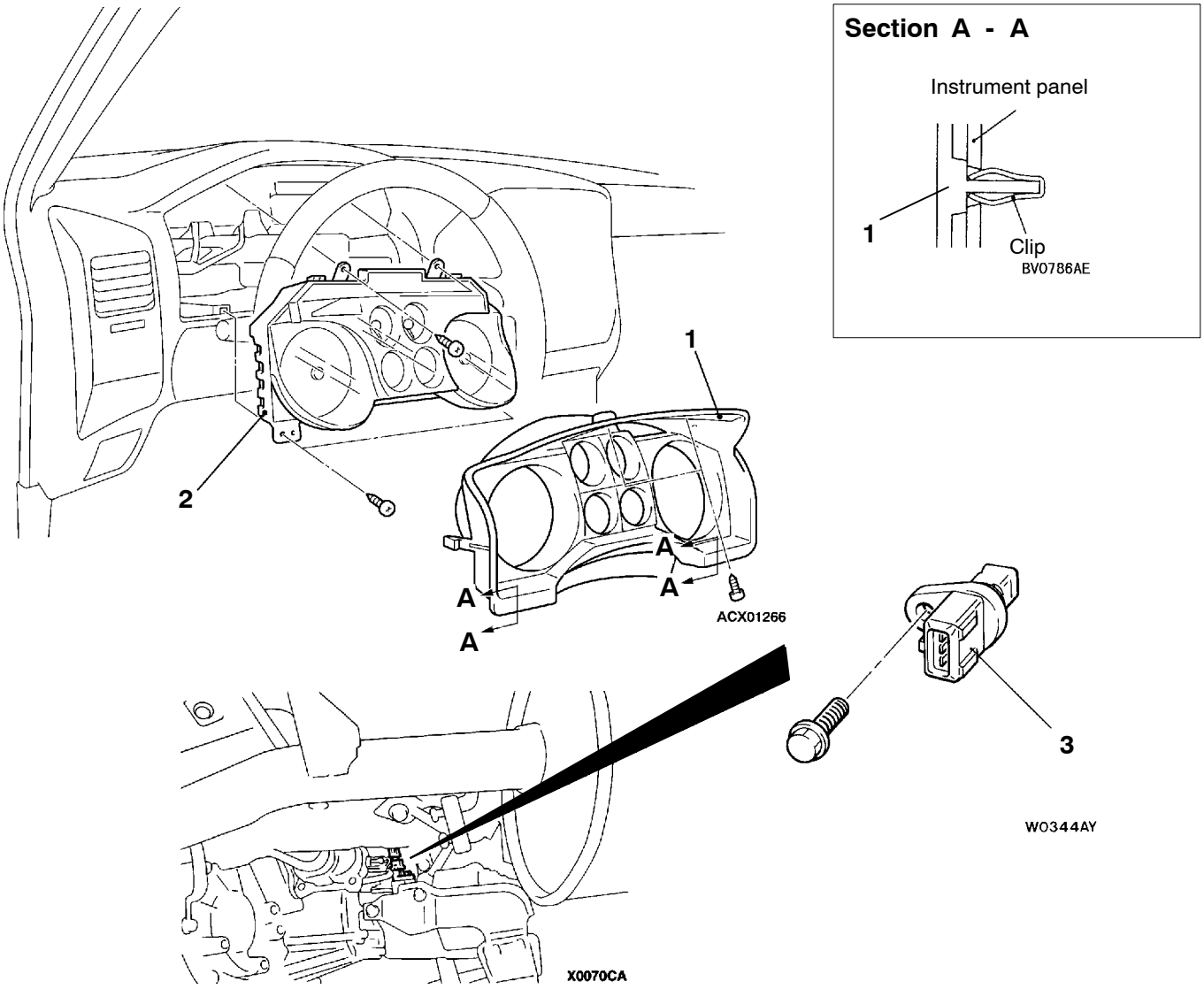


**Combination meter removal steps**

1. Meter bezel
2. Combination meter

**Vehicle speed sensor removal**

3. Vehicle speed sensor

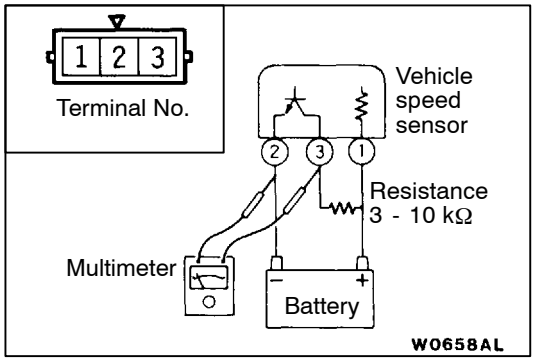


## INSPECTION

### VEHICLE SPEED SENSOR CHECK

1. Jack up the vehicle.
2. Remove the vehicle speed sensor, and then connect a 3 - 10 kΩ resistance as shown in the illustration at left.
3. Use a multimeter to check the change in voltage between terminals (2) and (3) when the propeller shaft is rotated (4 pulses per rotation).

Purchased from www.WorkshopManuals.co.uk

www.WorkshopManuals.co.uk

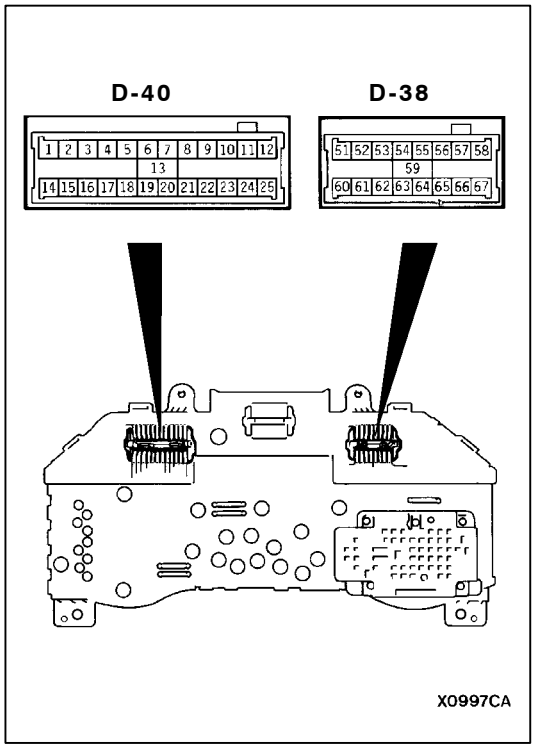


## COMBINATION METER INTERNAL RESISTANCE VALUE CHECK

Use a multimeter to measure the resistance between the terminals.

**Standard value:**

| Measurement terminal No. | Terminal name | Standard value |
|---|---|---|
| 62 - 11 | IG power supply - Earth | 1MΩ or more |
| 62 - 25 | IG power supply - Earth | 1MΩ or more |
| 62 - 63 | IG power supply - Fuel gauge | 1MΩ or more |
| 62 - 64 | IG power supply - Engine coolant temperature gauge | 1MΩ or more |
| 63 - 11 | Fuel gauge - Earth | 180 Ω |
| 63 - 25 | Fuel gauge - Earth | 180 Ω |
| 64 - 11 | Engine coolant temperature gauge - Earth | 210 Ω |
| 64 - 25 | Engine coolant temperature gauge - Earth | 210 Ω |
| 67 - 11 | Battery power supply - Earth | 1MΩ or more |
| 67 - 25 | Battery power supply - Earth | 1MΩ or more |
| 67 - 63 | Battery power supply - Fuel gauge | 1MΩ or more |
| 67 - 64 | Battery power supply - Engine coolant temperature gauge | 1MΩ or more |

Purchased from www.WorkshopManuals.co.uk

www.WorkshopManuals.co.uk

## DISASSEMBLY AND REASSEMBLY

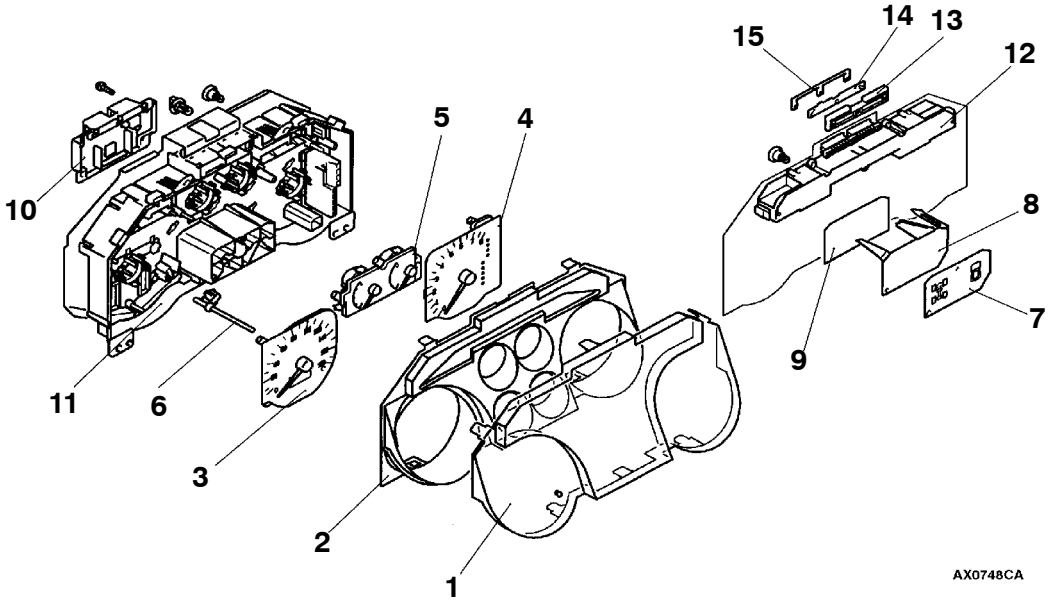


**Disassembly steps**

1. Glass
2. Window plate
3. Speedometer
4. Tachometer
5. Fuel gauge and engine coolant temperature assembly
6. Trip meter knob
7. Indicator plate
8. Indicator prism
9. Indicator lens
10. Instrument panel printed circuit board
11. Replace the combination meter case
12. Indicator case
13. Combination plate A
14. Combination plate B
15. Combination plate C

Purchased from www.WorkshopManuals.co.uk

www.WorkshopManuals.co.uk

# HEADLAMP ASSEMBLY

## SERVICE SPECIFICATIONS

| Item | | | Standard value | Limit |
|---|---|---|---|---|
| Headlamp emitter adjustment [Cut-off line (light/dark boundary line) position] | Low-beam | Vertical direction | 0.57° (10 mm) down from horizontal line H | – |
| | | Horizontal direction | Position where 15° rising portion intersects vertical line V | – |
| Headlamp illumination measurement cd (Corresponding to road surface 40 m in front at low beam) | | | – | 6,400 or higher for each lamp |

### NOTES ON HANDLING HEADLAMPS AND FRONT TURN-SIGNAL LAMPS

**The headlamps and front turn-signal lamps have plastic outer lenses, and so the following points should be noted during handling.**

- **Do not leave the headlamps on for more than 3 minutes while they are covered with protectors, otherwise damage may result.**
- **Do not mask the surfaces of the outer lenses by attaching tape.**
- **Do not scrape the surfaces of the outer lenses with tools that have sharp points.**
- **Use only the specified wax remover, and wash thoroughly with water.**
- **Only the specified genuine bulbs should be used.**

## SPECIAL TOOLS

| Tools | No. | Name | Application |
|---|---|---|---|
| 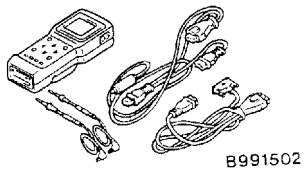  | MB991502 | MUT-II sub assembly | Checking the ETACS-ECU input signals |

## TROUBLESHOOTING

The headlamps are controlled by the Smart Wiring System (SWS). For troubleshooting procedures, refer to GROUP 54B.

## ON-VEHICLE SERVICE

### HEADLAMP AIMING ADJUSTMENT

After setting the vehicle to the following condition, adjust the headlamp aiming.

- Check that the tyre inflation pressure is at the value indicated on the tyre pressure labels.
- Set the vehicle to the unladen condition and park it on a level surface.
- Have a single person (approximately 55 kg) sit in the driver's seat.

Purchased from www.WorkshopManuals.co.uk

www.WorkshopManuals.co.uk

- Run the engine at a speed of 2000 r/min to fully charge the battery.
- Turn the headlamp level control switch to position ”0”.

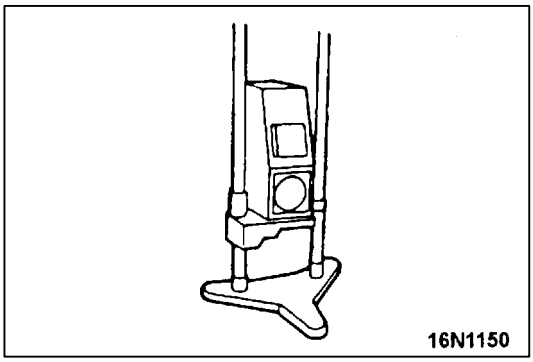


**LOW BEAM ADJUSTMENT**

1. Adjust the low-beam light axis by following the procedure given for the focusing-type headlamp tester which you are using.

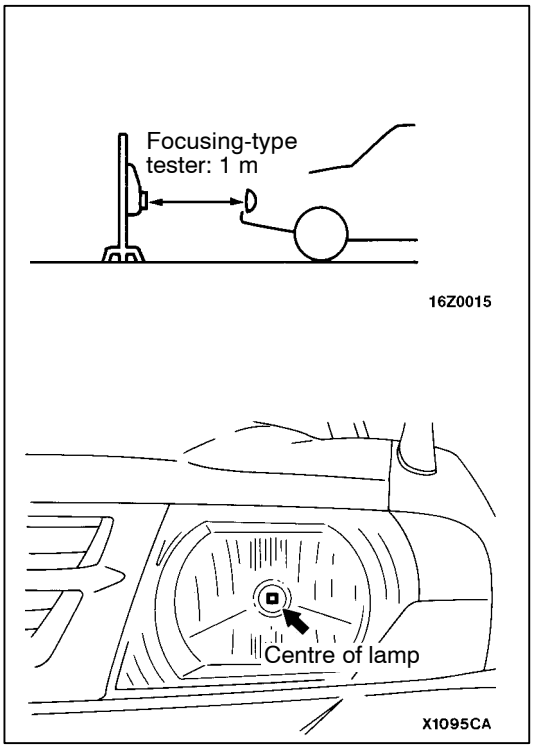


2. Set the tester so that the centre of the focusing lens is 1 m directly in front of the centre of the headlamp.

Purchased from www.WorkshopManuals.co.uk

www.WorkshopManuals.co.uk

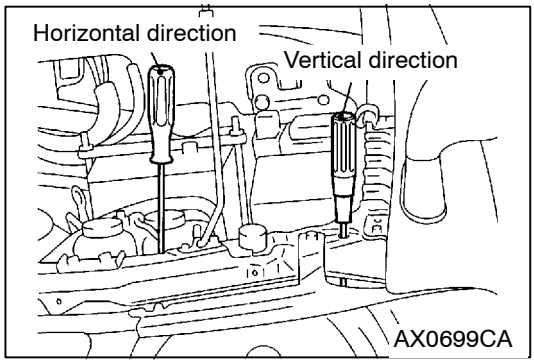


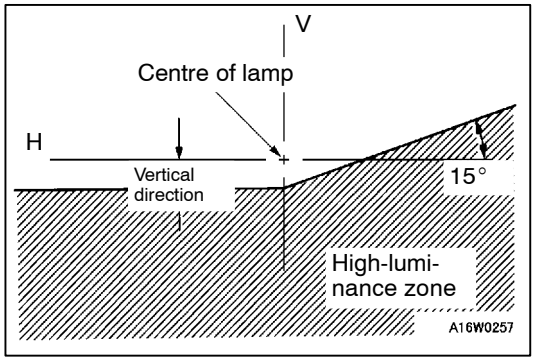


3. Turn the adjusting screws to adjust so that the deviation in the centre of the high-luminance zone (main optical axis) is at the standard value.

**Standard value:**

| | |
|---|---|
| Vertical direction | 0.57 ° (10 mm) down from horizontal line H |
| Horizontal direction | Position where 15 ° rising portion intersects vertical line V |

**Caution**

**(1) For the headlamp which is not being measured, disconnect that headlamp's connector if possible so that it does not illuminate while carrying out the adjustment. Furthermore, make sure that the light axis does not get shifted when re-connecting the connector.**

**(2) The headlamps have outer lenses which are made of plastic, so if covering the lens surface with an object which does not let light pass through, the headlamp should not be turned on for any more than 3 minutes. In addition, do not mask the outer lens surface by attaching tape or similar.**

**(3) The adjustment should always be completed by turning the adjusting screws in the tightening direction.**

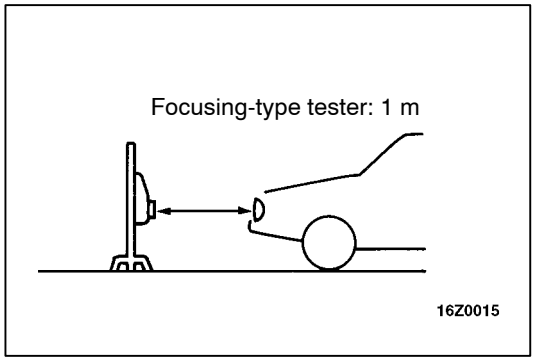


## LUMINANCE MEASUREMENT

1. Place the tester receiver so that it is directly opposite the headlamp at the distance shown in the illustration.
2. Run the engine at a speed of 2000 r/min to fully charge the battery.
3. Align with the centre of the lamp.

   NOTE
   Check that the light/dark separation line on the adjustment screen and the low-beam cut-off line are aligned at this time.
4. With the headlamps set to low beam, check that the luminance satisfies the limit value.

   **Limit: 6,400 cd or higher for each lamp**

Purchased from www.WorkshopManuals.co.uk

www.WorkshopManuals.co.uk

**Caution**

**(1) For the headlamp which is not being measured, disconnect that headlamp's connector if possible so that it does not illuminate while carrying out the adjustment. Furthermore, make sure that the light axis does not get shifted when re-connecting the connector.**

**(2) The headlamps have outer lenses which are made of plastic, so if covering the lens surface with an object which does not let light pass through, the headlamp should not be turned on for any more than 3 minutes. In addition, do not mask the outer lens surface by attaching tape or similar.**

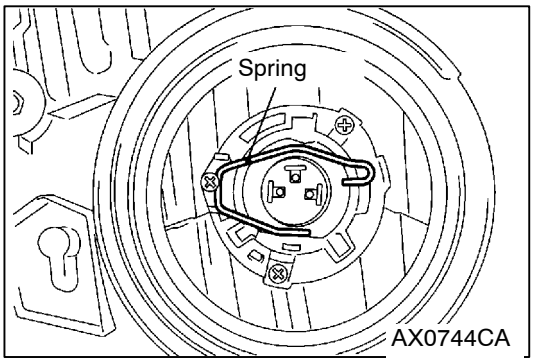


## HEADLAMP BULB REPLACEMENT

1. Remove the air cleaner case (R.H. side) and the ABS valve relay (L.H. side).
2. Disconnect the connector.
3. Remove the socket cover.
4. Remove the bulb retainer spring, and then take out the bulb.
5. After replacing the bulb, securely connect the connector.

**Caution**

**Do not touch the surface of the bulb with bare hands or with dirty gloves.**

**If the surface (glass section) should become dirty, clean it immediately with alcohol or thinner, and let it dry thoroughly before installing it.**

Purchased from www.WorkshopManuals.co.uk

www.WorkshopManuals.co.uk

# HEADLAMP ASSEMBLY

## REMOVAL AND INSTALLATION

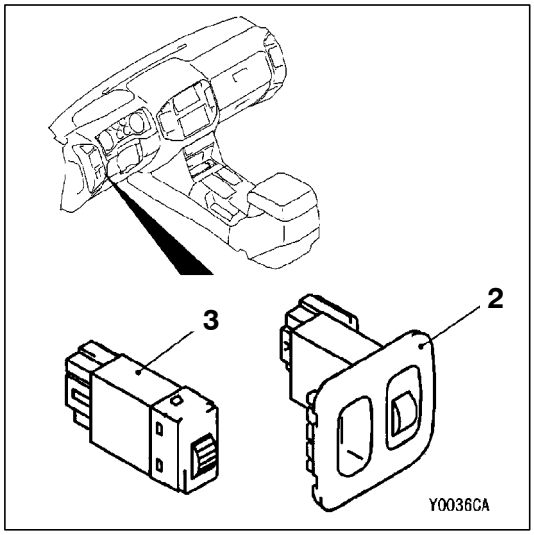


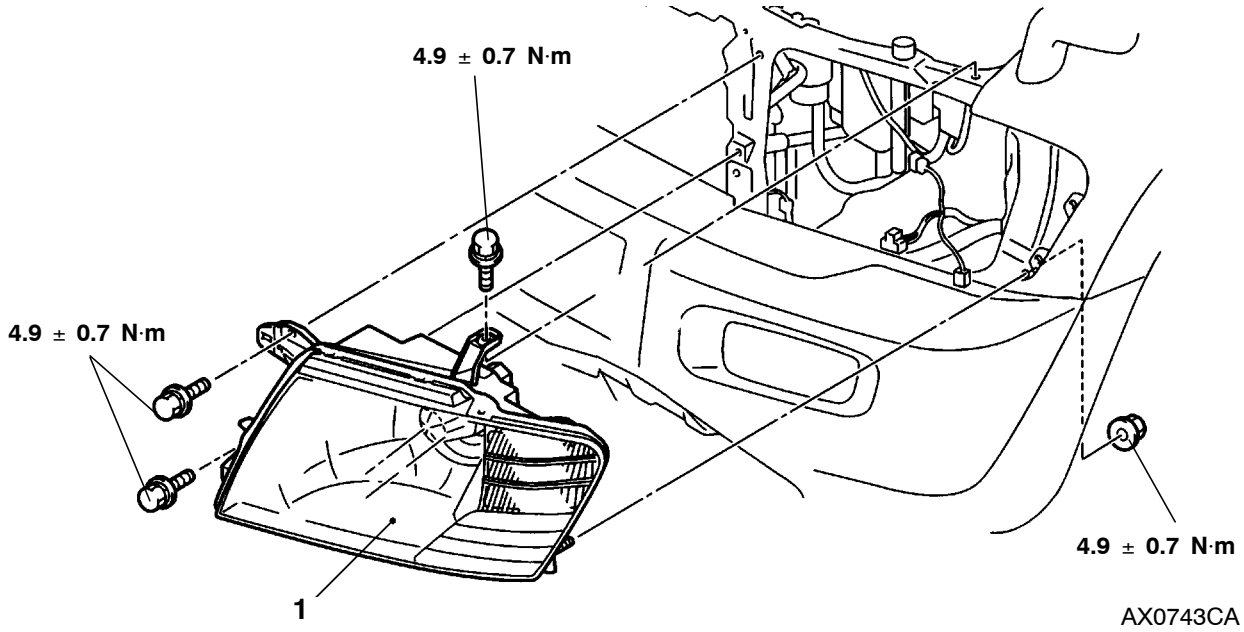


**Headlamp removal steps**

- Radiator grille (Refer to GROUP 51 – Front Bumper.)

◀A▶ 1. Headlamp Assembly

**Headlamp level control switch removal steps**

2. Switch garnish
3. Headlamp level control switch

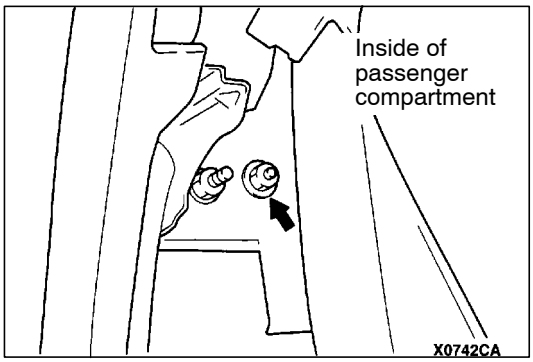


## REMOVAL SERVICE POINT

### ◀A▶ HEADLAMP ASSEMBLY REMOVAL

The headlamp mounting nut is the nut on the inside of the nut which is visible inside the passenger compartment when the front splash shield mounting is removed, and it is this nut which should be removed.

Purchased from www.WorkshopManuals.co.uk

www.WorkshopManuals.co.uk

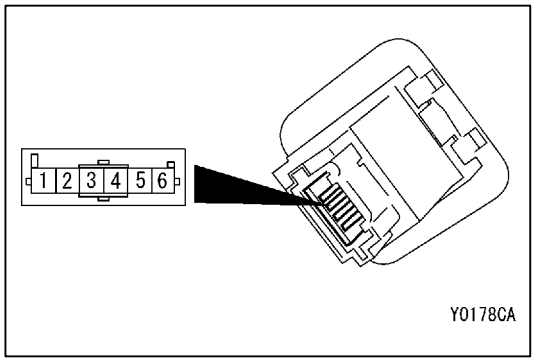


## INSPECTION

### HEADLAMP LEVEL CONTROL SWITCH CHECK

If the resistance value in the table shown below cannot be obtained after operating the headlamp level control switch, replace the headlamp level control switch.

| Terminal No. to measure resistance | Switch position | | | | |
|---|---|---|---|---|---|
| | 0 | 1 | 2 | 3 | 4 |
| Resistance between terminals (4) and (5) | 120 | 300 | 620 | 1,100 | 2,000 |

# FOG LAMPS

## SERVICE SPECIFICATIONS

| Item | Standard value |
|---|---|
| Fog lamp light axis check | Illuminates to within 40 metres |

## SPECIAL TOOLS

| Tools | No. | Name | Application |
|---|---|---|---|
| 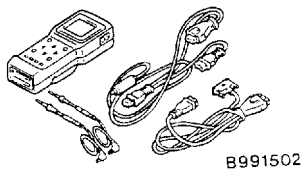  | MB991502 | MUT-II sub assembly | Checking the ETACS-ECU input signals |

## TROUBLESHOOTING

The fog lamp are controlled by the Smart Wiring System (SWS). For troubleshooting procedures, refer to GROUP 54B.

## ON-VEHICLE SERVICE

### FOG LAMP AIMING CHECK

After setting the vehicle to the following condition, adjust the headlamp aiming.

- Check that the tyre inflation pressure is at the value indicated on the tyre pressure labels.
- Set the vehicle to the unladen condition and park it on a level surface.
- Have a single person (approximately 55 kg) sit in the driver's seat.

Purchased from www.WorkshopManuals.co.uk

www.WorkshopManuals.co.uk

- Run the engine at a speed of 2,000 r/min to fully charge the battery.

Turn on the fog lamps and check that the illumination is within the standard value range.

**Standard value: Illuminates to within 40 metres**

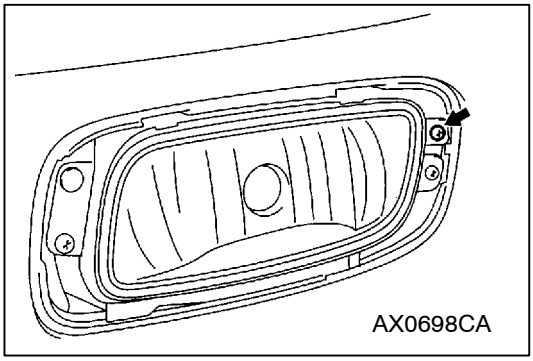


If the value is outside the standard value range, adjust using the adjusting screw.

NOTE

Horizontal adjustment is not possible.

**Caution**

1. **For the headlamp which is not being measured, disconnect that headlamp's connector if possible so that it does not illuminate while carrying out the adjustment. Furthermore, make sure that the light axis does not get shifted when re-connecting the connector.**
2. **The adjustment should always be completed by turning the adjusting screws in the tightening direction.**

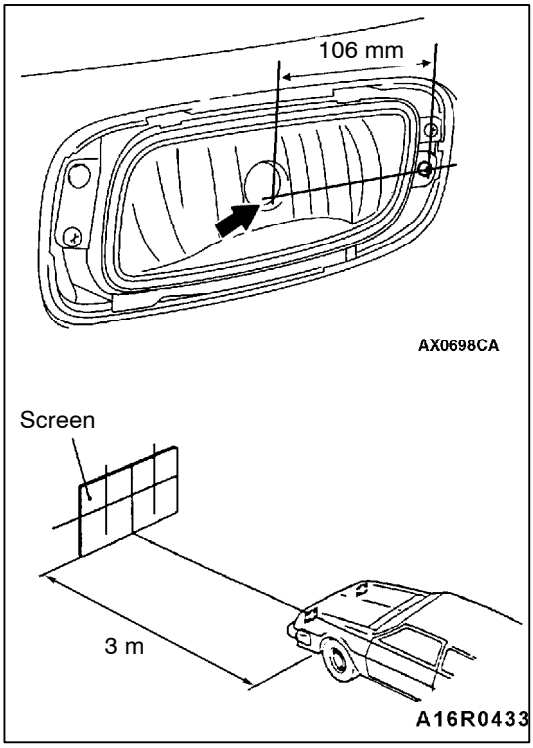


In addition, the method of checking the light axis on a screen (simple check) is given below.

1. Measure the centre of the fog lamp as shown in the illustration.
2. Place the screen so that it is directly opposite the centre of the fog lamp at a distance of 3 metres, and turn on the fog lamps.

Purchased from www.WorkshopManuals.co.uk

www.WorkshopManuals.co.uk

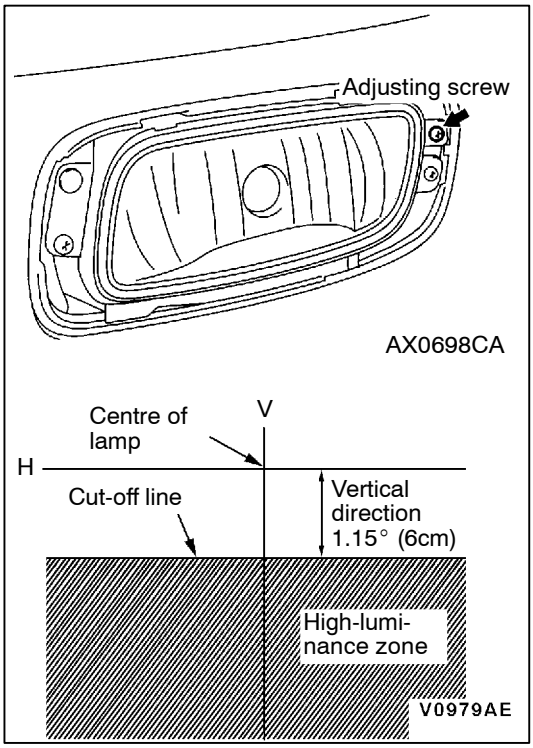


3. Turn the adjusting screw to adjust so that the position of the cut-off line (light/dark border line) is as shown in the figure.

   NOTE
   Horizontal adjustment is not possible.

   **Caution**
   **(1) For the headlamp which is not being measured, disconnect that headlamp's connector if possible so that it does not illuminate while carrying out the adjustment. Furthermore, make sure that the light axis does not get shifted when re-connecting the connector.**
   **(2) The adjustment should always be completed by turning the adjusting screws in the tightening direction.**

Purchased from www.WorkshopManuals.co.uk

www.WorkshopManuals.co.uk

# FOG LAMPS

## REMOVAL AND INSTALLATION

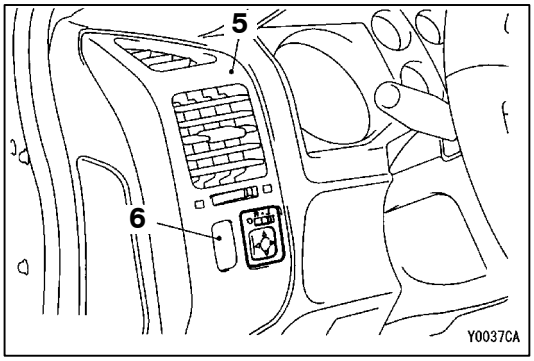


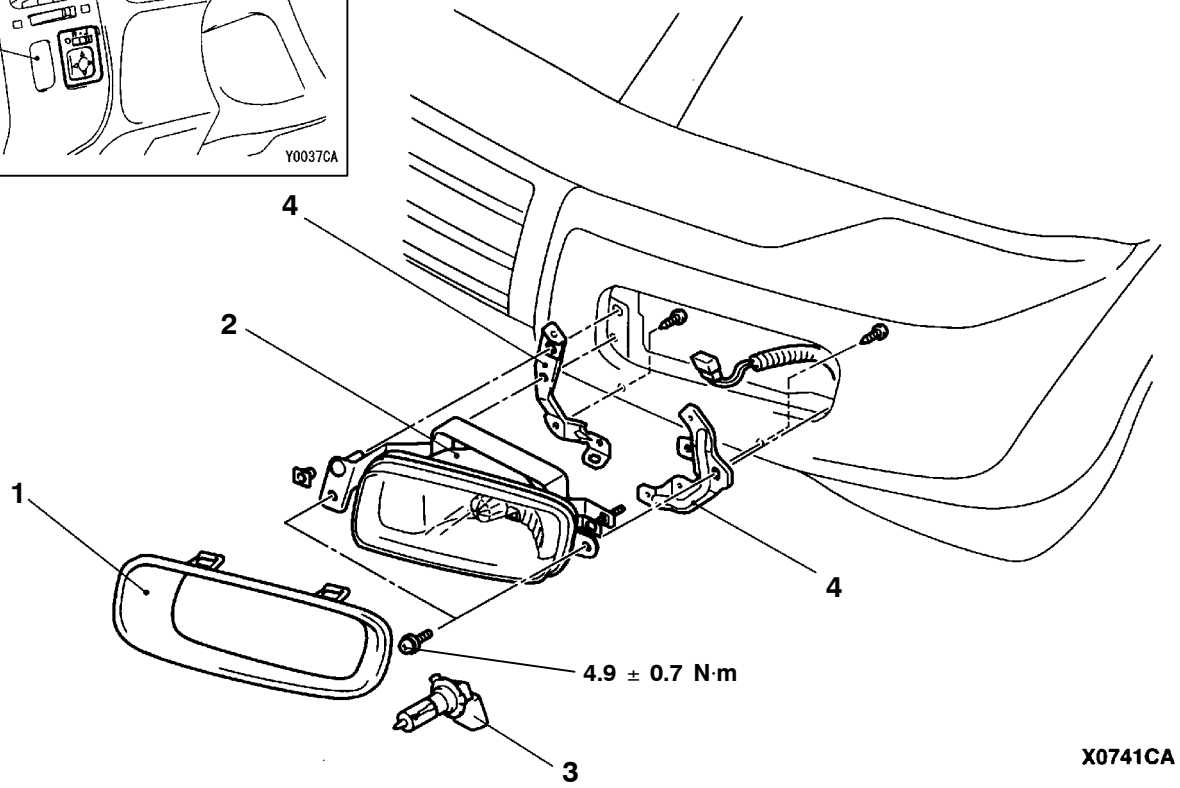


**Fog lamp removal steps**

1. Fog lamp bezel
2. Fog lamp
3. ◀A▶ Bulb
4. Fog lamp bracket

**Fog lamp switch removal steps**

5. Air outlet assembly (Refer to GROUP 52A - Instrument Panel.)
6. Fog lamp switch

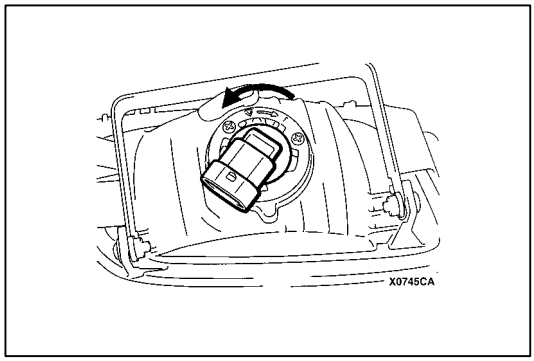


## REMOVAL SERVICE POINT

### ◀A▶ BULB REMOVAL

Turn the bulb assembly anti-clockwise to remove the bulb.

Purchased from www.WorkshopManuals.co.uk

www.WorkshopManuals.co.uk

**Caution**

1. **Only the specified genuine bulbs should be used.**
2. **Do not touch the surface of the bulb with bare hands or with dirty gloves.**
   **If the surface (glass section) should become dirty, clean it immediately with alcohol or thinner, and let it dry thoroughly before installing it.**

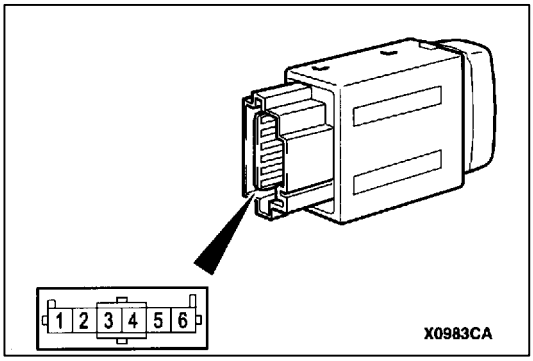


## INSPECTION

### FOG LAMP SWITCH CONTINUITY CHECK

| Switch position | | Terminal No. | | | | | | |
|---|---|---|---|---|---|---|---|---|
| | | 1 | 2 | 3 | ILL | 4 | 5 | 6 |
| ON | FRONT | ○ | ○ | ○ | ⊘ | ○ | | |
| | REAR | | | ○ | ⊘ | ○ | ○ | ○ |
| OFF | | | | ○ | ⊘ | ○ | | |

# SIDE TURN-SIGNAL LAMPS

## SPECIAL TOOL

| Tools | No. | Name | Application |
|---|---|---|---|
| 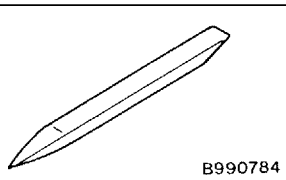  | MB990784 | Ornament remover | Side turn-signal lamp removal |

Purchased from www.WorkshopManuals.co.uk

www.WorkshopManuals.co.uk

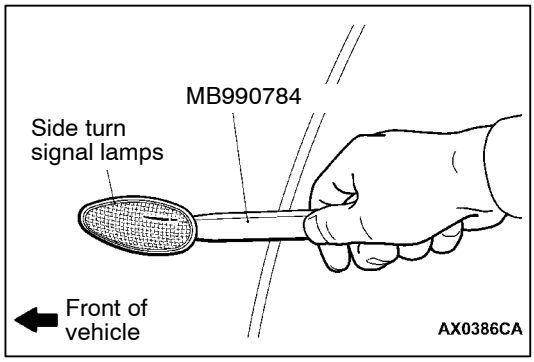


## SIDE TURN-SIGNAL LAMPS

### REMOVAL SERVICE POINTS

Use the special tool or similar tool to disengage the hook from the fender, and then remove the side turn-signal lamp.

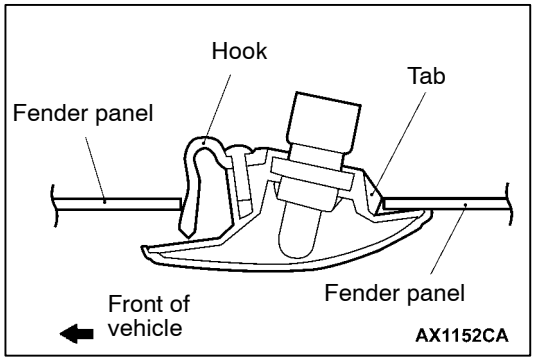


### INSTALLATION SERVICE POINTS

Hook the tab onto the fender panel to install the side turn-signal lamp.

# ROOM LAMP

## TROUBLESHOOTING

The room lamps are controlled by the Smart Wiring System (SWS). For troubleshooting procedures, refer to GROUP 54B.

## ON-VEHICLE SERVICE

### ROOM LAMP DELAY-OFF TIME ADJUSTMENT PROCEDURE

The-room lamps are controlled by the Smart Wiring System (SWS). For room lamp delay-off time adjustment procedures, refer to GROUP 54B.

Purchased from www.WorkshopManuals.co.uk

www.WorkshopManuals.co.uk

# REAR COMBINATION LAMPS

## SPECIAL TOOLS

| Tools | No. | Name | Application |
|---|---|---|---|
| 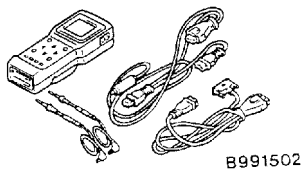  | MB991502 | MUT-II Sub assembly | Checking the ETACS-ECU input signals |
| 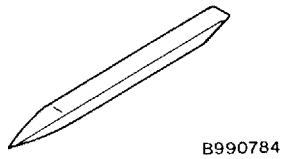  | MB990784 | Ornament remover | Rear combination lamp removal |

## TROUBLESHOOTING

Rear combination lamps are controlled by the Smart Wiring System (SWS). For troubleshooting procedures, refer to GROUP 54B.

## REAR COMBINATION LAMPS
### REMOVAL AND INSTALLATION

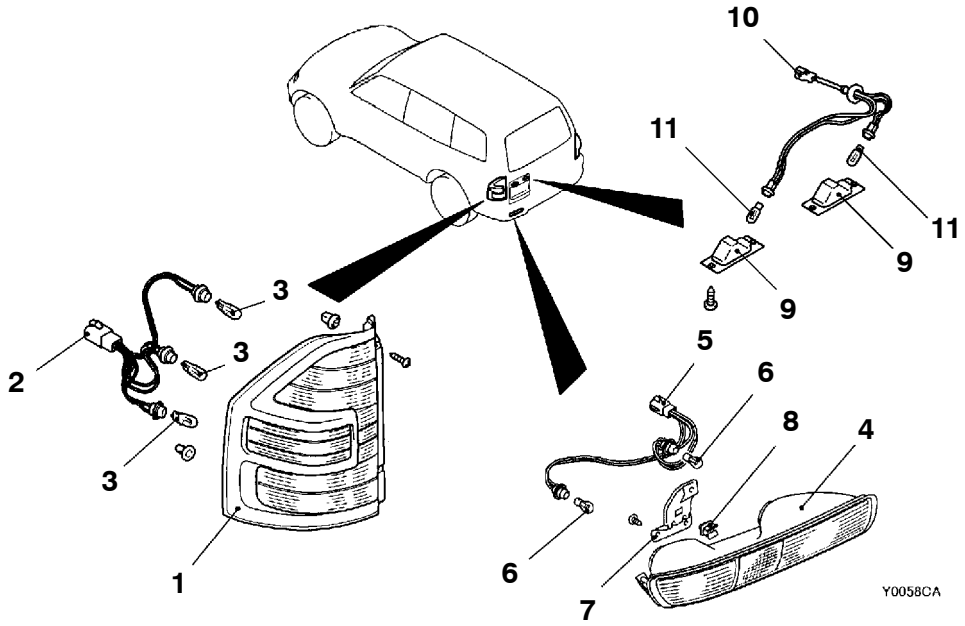


**Rear combination lamp removal steps**

1. Rear combination lamp
2. Socket assembly
3. Bulb

**Rear lamp removal steps**

4. Rear lamp
5. Socket assembly
6. Bulb
7. Rear lamp bracket
8. Clip

**Licence plate lamp removal steps**

9. Licence plate lamp
10. Socket assembly
11. Bulb

Purchased from www.WorkshopManuals.co.uk

www.WorkshopManuals.co.uk

# HIGH-MOUNTED STOP LAMP

## REMOVAL AND INSTALLATION

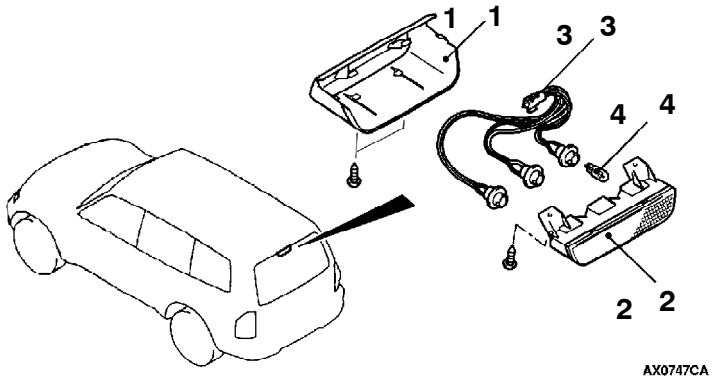


**Removal steps**

1. High-mounted stop lamp cover
2. High-mounted stop lamp body
3. Socket assembly
4. Bulb

# COLUMN SWITCH

## SPECIAL TOOL

| Tools | No. | Name | Application |
|---|---|---|---|
| 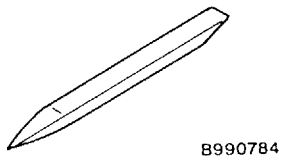  | MB990784 | Ornament remover | Column cover removal |

## REMOVAL AND INSTALLATION

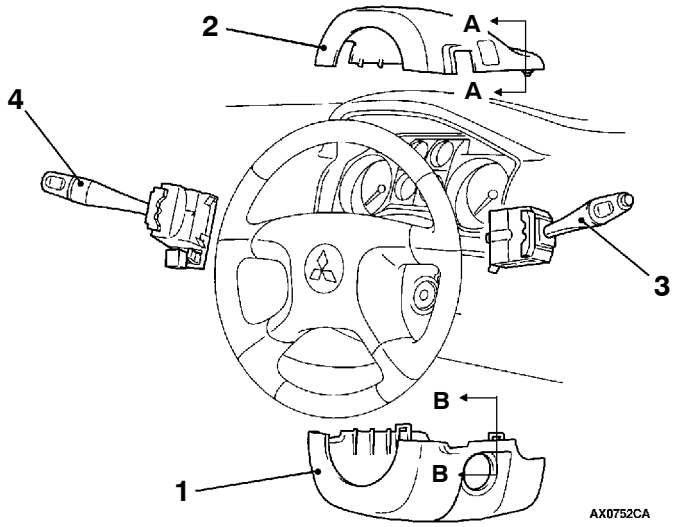


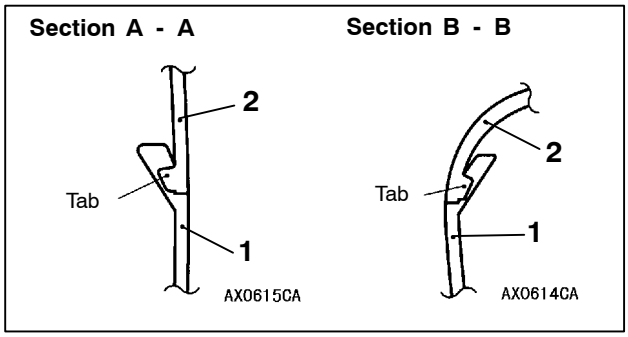


**Removal steps**

1. Lower column cover (Refer to GROUP 52A - Instrument Panel.)
2. Upper column cover (Refer to GROUP 52A - Instrument Panel.)
3. Wiper and washer switch
4. Lighting switch

Purchased from www.WorkshopManuals.co.uk

www.WorkshopManuals.co.uk

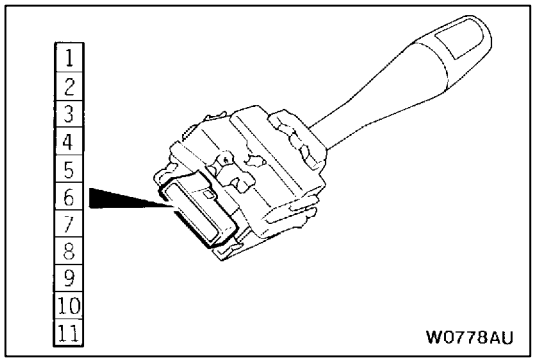


## INSPECTION

### LIGHTING SWITCH CONTINUITY CHECK <R.H. DRIVE VEHICLES>

| Switch position | Terminal No. | | | | | | |
|---|---|---|---|---|---|---|---|
| | 3 | 6 | 7 | 8 | 9 | 10 | 11 |
| OFF | | | | | | | |
| Tail gate lamps | ○ | | ○ | | | | |
| Headlamps | ○ | ○ | | | | | |
| Passing lamps | ○ | | | ○ | | | |
| Dimmer | ○ | | | | ○ | | |
| Turn-signal lamp R.H. | ○ | | | | | ○ | |
| Turn-signal lamp L.H. | ○ | | | | | | ○ |

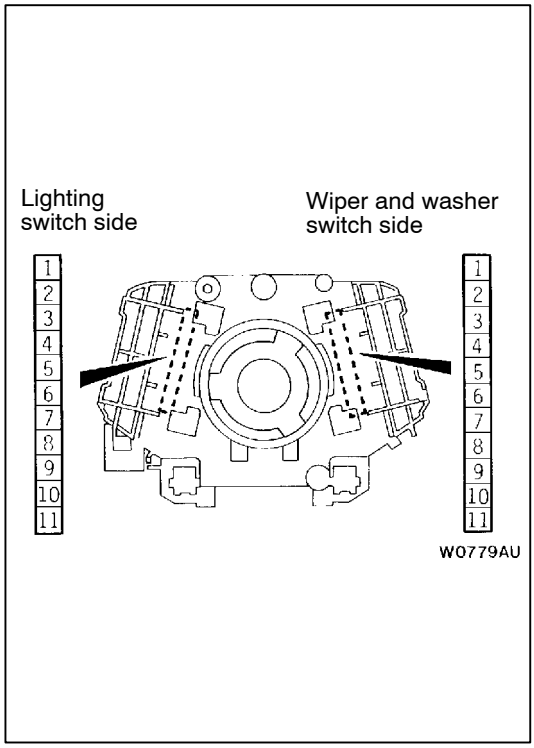


### COLUMN SWITCH (SWITCH BODY) CONTINUITY CHECK

(1) Remove the lighting switch and the wiper and washer switch.
(2) Check that there is continuity between the same terminals [terminals (3) and (11)] of each connector of the column switch body which is still on the steering column.

| Terminal No. | | Lighting switch-side connector | | | | | | | | |
|---|---|---|---|---|---|---|---|---|---|---|
| | | 3 | 4 | 5 | 6 | 7 | 8 | 9 | 10 | 11 |
| Wiper and washer switch-side connector | 3 | ○ | | | | | | | | |
| | 4 | | ○ | | | | | | | |
| | 5 | | | ○ | | | | | | |
| | 6 | | | | ○ | | | | | |
| | 7 | | | | | ○ | | | | |
| | 8 | | | | | | ○ | | | |
| | 9 | | | | | | | ○ | | |
| | 10 | | | | | | | | ○ | |
| | 11 | | | | | | | | | ○ |

Purchased from www.WorkshopManuals.co.uk

www.WorkshopManuals.co.uk

# HAZARD WARNING LAMP SWITCH

## SPECIAL TOOL

| Tools | No. | Name | Application |
|---|---|---|---|
| 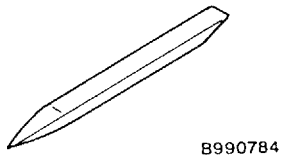 B990784 | MB990784 | Ornament remover | Center panel removal |

## HAZARD WARNING LAMP SWITCH

### REMOVAL AND INSTALLATION

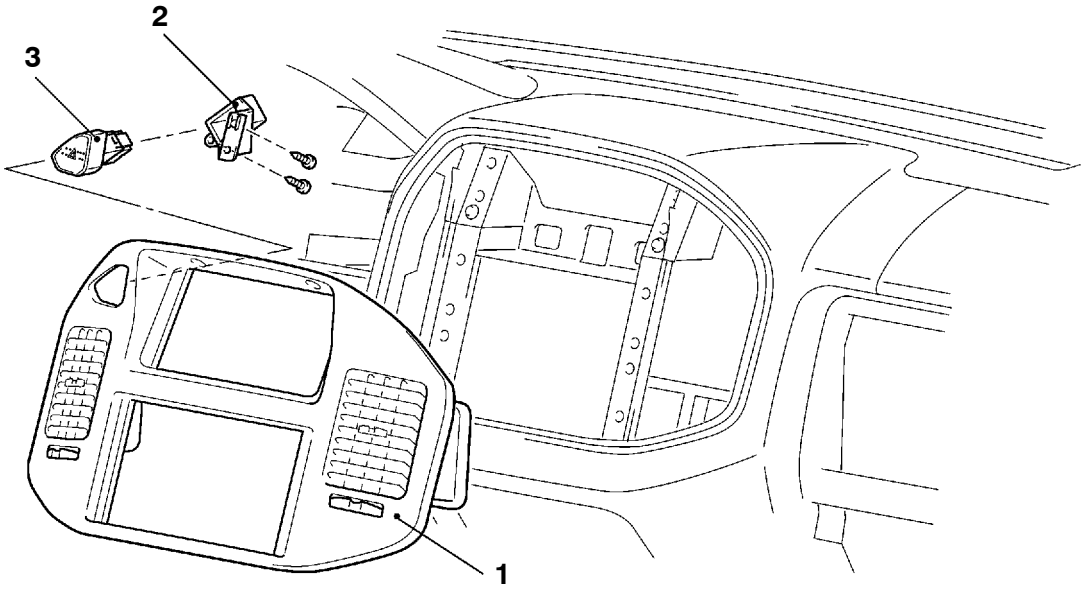


ACX01270

**Removal steps**

1. Center panel (Refer to GROUP 52A - Instrument Panel.)
2. Bracket
3. Hazard Warning Lamp Switch

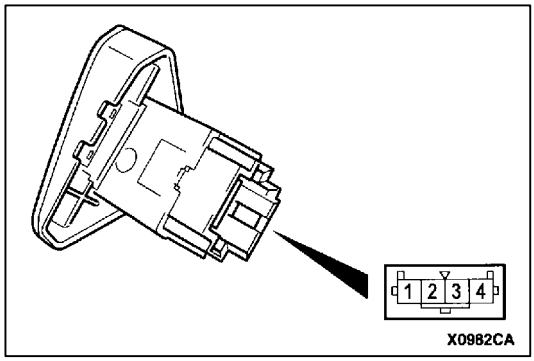


### HAZARD LAMP SWITCH CONTINUITY CHECK

| Switch position | Terminal No. | | | | |
|---|---|---|---|---|---|
| | 1 | 2 | 3 | ILL | 4 |
| OFF | | | ○ | ⊕ | ○ |
| ON | ○ | ○ | ○ | ⊕ | ○ |

Purchased from www.WorkshopManuals.co.uk

www.WorkshopManuals.co.uk

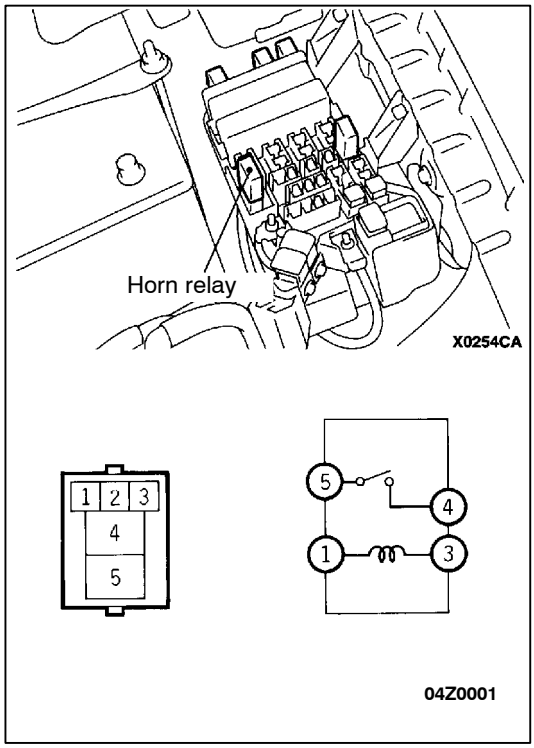


# HORN

## INSPECTION

### HORN RELAY CONTINUITY CHECK

| Switch position | Terminal No. | | | |
|---|---|---|---|---|
| | 1 | 3 | 4 | 5 |
| When current is not supplied | ○ | ○ | | |
| When current is supplied | ⊖ | ⊕ | ○ | ○ |

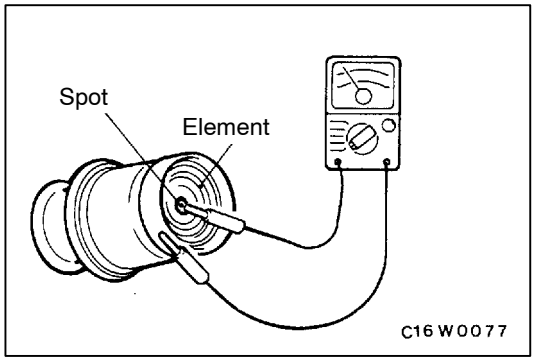


# CIGARETTE LIGHTER

## INSPECTION

- Remove the plug and check the spot for wear.
- Check that there are no tobacco stains or foreign particles on the element.
- Use a multimeter to check the continuity of the element.

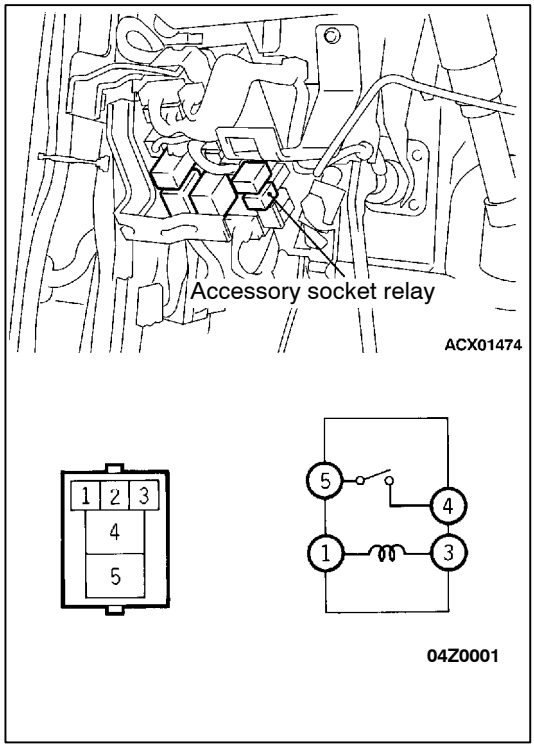


# ACCESSORY SOCKET

## INSPECTION

### ACCESSORY SOCKET RELAY CONTINUITY CHECK

| Switch position | Terminal No. | | | |
|---|---|---|---|---|
| | 1 | 3 | 4 | 5 |
| When current is not supplied | ○ | ○ | | |
| When current is supplied | ⊖ | ⊕ | ○ | ○ |

Purchased from www.WorkshopManuals.co.uk

www.WorkshopManuals.co.uk

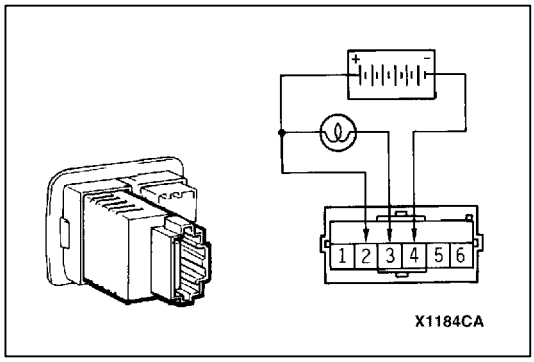


# RHEOSTAT

## INSPECTION

1. Connect a test lamp (40 W) to the battery as shown in the illustration.
2. Operate the rheostat. If the luminance of the lamp changes steadily with no flashing, the rheostat is functioning normally.

Purchased from www.WorkshopManuals.co.uk

www.WorkshopManuals.co.uk

# CLOCK OR CENTER DISPLAY

## PRECAUTIONS WITH REGARD TO CENTER DISPLAY SERVICE WORK

When the battery is disconnected, model selection screen is shown in center display. Select the model with “H” key or “M” key and enter the selection with “SET” key. If model selection needs to be corrected, press the key on the left end to display the setting screen.

## TROUBLESHOOTING

| Vehicle | Center display unit |
|---|---|
| Petrol-powered vehicles | MR532880 |
| | DU-435-1 |
| Diesel-powered vehicles | MR532881 |
| | DU-435-2 |

Petrol-powered vehicles

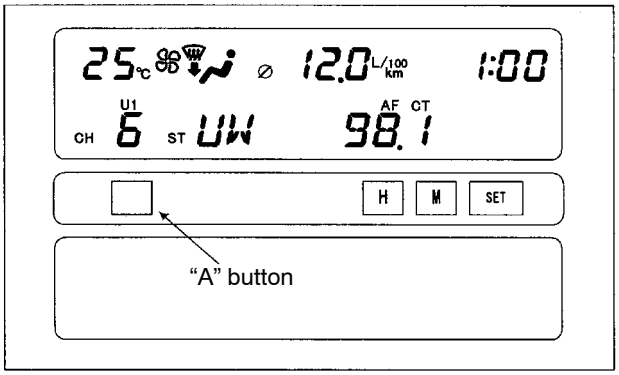


Diesel-powered vehicles

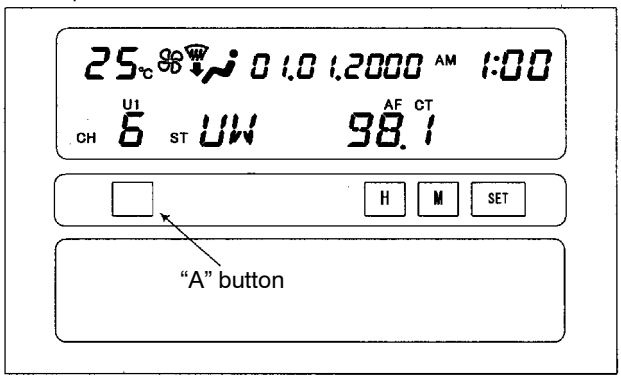


Purchased from www.WorkshopManuals.co.uk

www.WorkshopManuals.co.uk

## BEFORE REMOVING THE BATTERY

The Center display has a large amount of data unique to the vehicle in its memory. When the battery cable is disconnected, that memory is affected as shown in the table below. Accordingly, it is necessary to make sure that you take notes of important information before disconnecting the battery cable.

| Function | Input function/memory | When battery cable is disconnected |
|---|---|---|
| Clock set on display | Current time | Retains data for approx. 1 hour |
| Vehicle model set | Short (3-door models)/long (5-door models) | Retains data for approx. 1 hour |
| Brightness set for display | Position set on display | Retains data for approx. 1 hour |
| Unit set for trip computer | km or mile, L/100km or mpg or km/L<br>Average vehicle speed after reset | Retains data for approx. 1 hour |
| Average vehicle speed on display | Average vehicle speed after reset | Retains data for approx. 1 hour |
| Average fuel consumption on display | Average fuel consumption after reset | Retains data for approx. 1 hour |
| Cruising range on display | Cruising range, fuel economy | Retains data for approx. 1 hour |
| Outside temperature on display | Outside temperature after the ignition switch is turned to the OFF(LOCK) position. | Retains data for approx. 1 hour<br>* The outside temperature sensor is located near the engine. Therefore, incorrectly high temperature may be displayed when the battery cable is reconnected within one hour. |

## DIAGNOSIS FUNCTION FOR CENTER DISPLAY

Center display has the following diagnosis function:

| Function | Contents |
|---|---|
| Service function | There are the following 4 diagnosis modes available |
| 1. Check of vehicle information | The vehicle, short (3-door models)/long (5-door models) set |
| 2. Check of LCD segments | The LCD segments for display available to light on or not |
| 3. Check of sensors | Outside temperature, voltage of fuel gauge unit, system voltage, fuel amount remains, fuel economy calculated after supply of fuel |
| 4. Check of units connected into the center display | The units connected on display<br>Voltage (%) on terminal for MUT-II<br>Vehicle speed signal sent by engine-ECU<br>Oscillating signal |

Purchased from www.WorkshopManuals.co.uk

www.WorkshopManuals.co.uk

## SERVICE MODE FOR CENTER DISPLAY

### ENTERING AND TERMINATING THE SERVICE MODE

(1) To enter the service mode, turn the ignition switch to the LOCK (OFF) position.
(2) Turn the ignition switch to the ON position while pushing “A” button, and then push “H” button twice while pushing “A” button.
(3) Now the center display has entered the service mode. Each mode is displayed when the “SET” button is pushed.
(4) To terminate the service mode, press any button other than the “SET” button.

1. Check of vehicle information
   The following screen is displayed first when the unit enters the service mode.

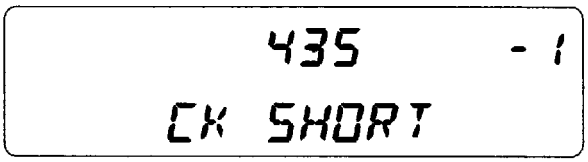


| Parts No. | MR532881 | MR532880 | |
|---|---|---|---|
| Vehicle type | Diesel-powered vehicles | Petrol-powered vehicles | |
| | | Short wheelbase | Long wheelbase |
| Display | 435 - 2<br>CK | 435 - 1<br>CK SHORT | 435 - 1<br>CK LONG |

When the “SET” button is pushed on this screen, the unit proceeds to the next service mode, Check of LCD segments.

2. Check of LCD segments
   This service mode consists of 6 display screens; the screen where all segments are illuminated, the screen where all segments are extinguished, and four kind of screens where 1/4 of segments are illuminated. Each screen can be changed sequentially when pushing on the “SET” button.

Purchased from www.WorkshopManuals.co.uk

www.WorkshopManuals.co.uk

All segments illuminated

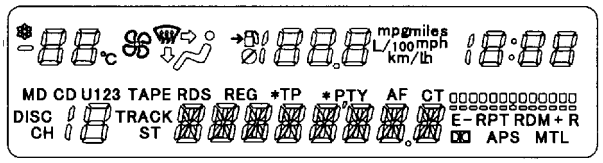


↓ SET

All segments extiguished

↓ SET

1/4 of segments illuminated

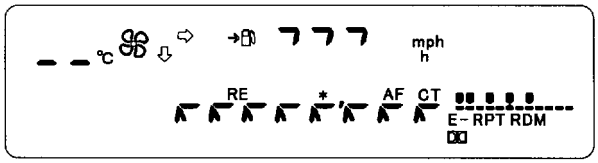


(4 displays)

When the “SET” button is pushed on this screen six times, the unit proceeds to the next service mode, Check of Sensors.

Purchased from www.WorkshopManuals.co.uk

www.WorkshopManuals.co.uk

3. Check of Sensors
   This service mode checks outside temperature, remained fuel amount, fuel consumption, system voltage, and fuel consumption after supply of fuel.

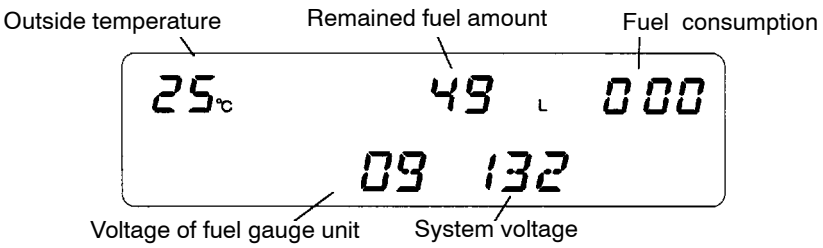


Fuel gauge unit characteristics (only petrol-powered vehicles)

| Remained fuel amount [L] | MR532880 | |
|---|---|---|
| | Petrol-powered vehicles | |
| | Short wheelbase | Long wheelbase |
| | Voltage of fuel gauge unit [V]<br>+0.2/-0.2V | |
| 80 | - | 0.3 |
| 70 | - | 0.7 |
| 60 | 0.4 | 0.9 |
| 50 | 0.8 | 1.2 |
| 40 | 1.2 | 1.5 |
| 30 | 1.6 | 1.9 |
| 20 | 2.0 | 2.3 |
| 10 | 2.5 | 2.7 |
| 5 | 2.8 | 2.9 |
| 0 | 3.0 | 3.1 |

The voltage of fuel gauge unit depends on the system voltage.

| | | | |
|---|---|---|---|
| Battery | 12.0 V | 13.2 V | 14.4 V |
| Fuel gauge unit | 1.8 V | 2.0 V | 2.2 V |

The remained fuel amount, which is displayed on the screen, is less than the actual amount. This will give the vehicle an extra amount of 5-Litre fuel in case of shortage of gasoline. Moreover, the fuel remaining under the fuel gauge unit (pump) cannot be sucked. Therefore, there is more than 5 Litre difference between the actual remaining fuel amount and the displayed amount of fuel.

When the “SET” button is pushed on this screen, the unit proceeds to the next service mode, Check of Unit connected Sensors.

Purchased from www.WorkshopManuals.co.uk

www.WorkshopManuals.co.uk

4. Check of units connected into the center display
   The lower column of this screen shows whether an audio unit, air-conditioner or the MUT-II is connected. The upper column shows voltage level (%) detected at the MUT-II terminal, the vehicle speed and clock.

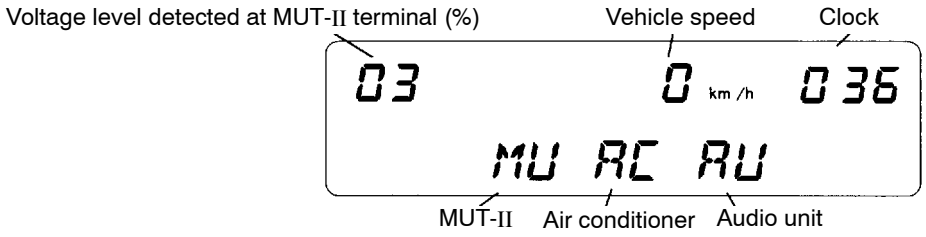


When the “SET” button is pushed on this screen, the unit returns to the first screen, Check of Vehicle Information.

Purchased from www.WorkshopManuals.co.uk

www.WorkshopManuals.co.uk

## VOLTAGE AT CENTER DISPLAY UNIT TERMINALS

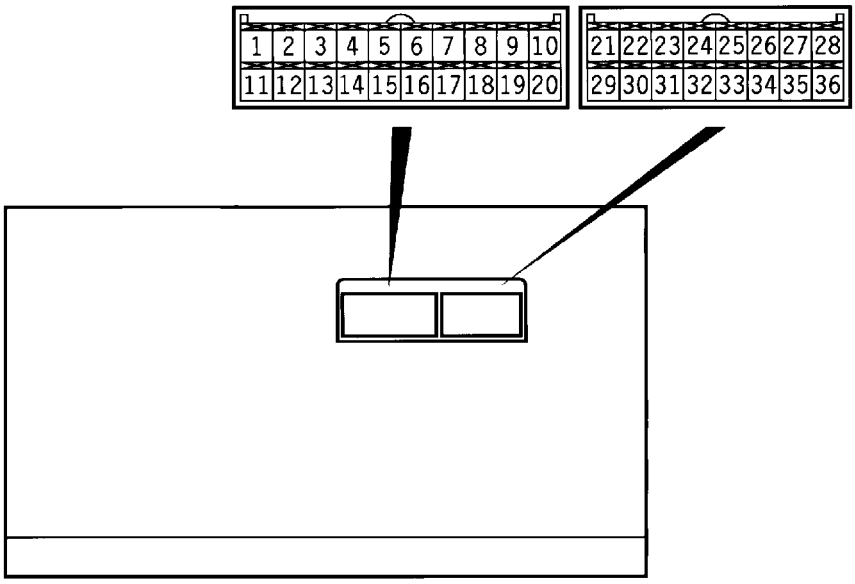


V0844AE

| Terminal No. | Input/ Output | Signal symbol | Terminal voltage (V) | Wiring harness problem | | Trouble symptom caused by wiring harness problem |
|---|---|---|---|---|---|---|
| | | | | Open circuit | Short circuit | |
| 1-4 | - | - | - | - | - | |
| 5 | Input | ISOK | Hi: System voltage<br>Lo: 0-1 | Exists | Exists | MUT-II cannot be used to check the engine-ECU. |
| 6 | - | - | - | - | - | |
| 7 | Input/ Output | M-DATA (AUDIO) | Hi: 4-5<br>Lo: 0-1 | Exists | Exists | Audio display does not appear. Panel switch cannot be operated for audio unit. Nighttime illumination does not appear for audio unit. |
| 8 | Input/ Output | M-CLOCK (AUDIO) | Hi: 4-5<br>Lo: 0-1 | Exists | Exists | Audio display does not appear. Panel switch cannot be operated for audio unit. Nighttime illumination does not appear for audio unit. |
| 9 | Input/ Output | M-DATA (A/C) | Hi: 4-5<br>Lo: 0-1 | Exists | Exists | A/C display does not appear.<br>Outside air temperature does not appear |
| 10 | Input/ Output | M-CLOCK (AUDIO) | Hi: 4-5<br>Lo: 0-1 | Exists | Exists | A/C display does not appear.<br>Outside air temperature does not appear |
| 11-14 | - | - | - | - | - | - |

Purchased from www.WorkshopManuals.co.uk

www.WorkshopManuals.co.uk

| Terminal No. | Input/ Output | Signal symbol | Terminal voltage (V) | Wiring harness problem | | Trouble symptom caused by wiring harness problem |
|---|---|---|---|---|---|---|
| | | | | Open circuit | Short circuit | |
| 15 | Input/ Output | K | Hi: System voltage<br>Lo: 0-1 | Exists | Exists | Values on trip information screen (average vehicle speed, fuel consumption and cruising distance) are abnormal. Communication is impossible between the engine-ECU and the MUT-II. |
| 16 | - | - | - | - | - | - |
| 17 | Input/ Output | M-BUSY (AUDIO) | Hi: 4-5<br>Lo: 0-1 | Exists | Exists | Audio display does not appear. Panel switch cannot be operated for audio unit. Nighttime illumination does not appear for audio unit. |
| 18 | - | SHIELD-GND | - | - | - | - |
| 19 | Input/ Output | M-BUSY (A/C) | Hi: 4-5<br>Lo: 0-1 | Exists | Exists | A/C display does not appear.<br>Outside air temperature does not appear |
| 20 | - | SHIELD-GND | - | - | - | - |
| 21, 22 | - | - | - | - | - | - |
| 23 | Input | EX-TEMP | | Exists | Exists | Outside air temperature does not appear. |
| 24 | Input | ILL+ | Hi: System voltage<br>Lo: 0-1 | Exists | - | Nighttime illumination does not appear for audio units. |
| | | | | - | Exists | Blown multipurpose fuse. |
| 25 | Input | ACC (ACC power supply) | System voltage | Exists | - | Screen display does not appear. |
| | | | | - | Exists | Blown multipurpose fuse. |
| 26 | Input | +B | System voltage | Exists | - | Screen display does not appear. |
| | | | | - | Exists | Blown multipurpose fuse. |
| 27 | Input | VSS | Hi: System voltage<br>Lo: 0-1 | Exists | Exists | Abnormal outside air temperature appears.<br>(only diesel-powered vehicles) |
| 28 | - | GND (earth) | - | Exists | - | Screen display does not appear. |
| 29, 30 | - | - | - | - | - | - |
| 31 | - | GND-TEMP | | Exists | Exists | Outside air temperature does not appear. |
| 32 | Input | ILL- | | Exists | Exists | The display screen can not be dimmed. |
| 33 | Input | FUEL GAUGE | - | | Exists | Abnormal cruising distance appears. |
| 34, 35 | - | - | - | - | - | - |
| 36 | Input | IG1 | Hi: System voltage | Exists | - | Communication with engine-ECU is impossible. Abnormal driving data values appear. |
| | | | | - | Exists | Communication with engine-ECU is impossible. Abnormal driving data values appear. Blown multipurpose fuse. |

Purchased from www.WorkshopManuals.co.uk

www.WorkshopManuals.co.uk

## INSPECTION CHART CLASSIFIED BY TROUBLE SYMPTOMS

| Related unit | Trouble Symptom | Inspection procedure No. | Reference page |
|---|---|---|---|
| Malfunction of center display, related sensors, and wiring harnesses | No display appears after the ignition key is turned to the ACC position. | 1 | 54A-62 |
| | Outside air temperature does not appear or abnormal outside air temperature appears. | 2 | 54A-62 |
| | Abnormal vehicle speed is displayed on the service mode. | 3 | 54A-63 |
| | Abnormal driving data are displayed:<br>● Abnormal average fuel consumption (momentary fuel consumption) and average vehicle speed<br>● Abnormal cruising distance | 4 | 54A-64 |
| | Clock runs fast or slow. | 5 | 54A-64 |
| | The display screen is dim. | 6 | 54A-65 |
| | Air conditioning display does not apper. | 7 | 54A-66 |

Purchased from www.WorkshopManuals.co.uk

www.WorkshopManuals.co.uk

## INSPECTION PROCEDURE 1

No display appears after the ignition key is turn to the ACC position.

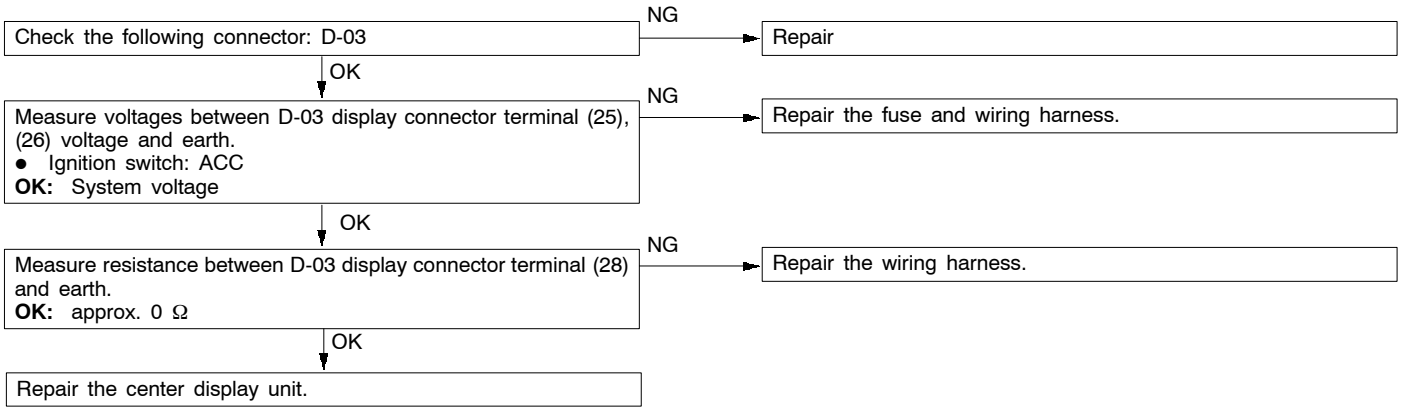


## INSPECTION PROCEDURE 2

Outside air temperature does not appear or abnormal outside air temperature appears.
<Vehicles without automatic air conditioner system>

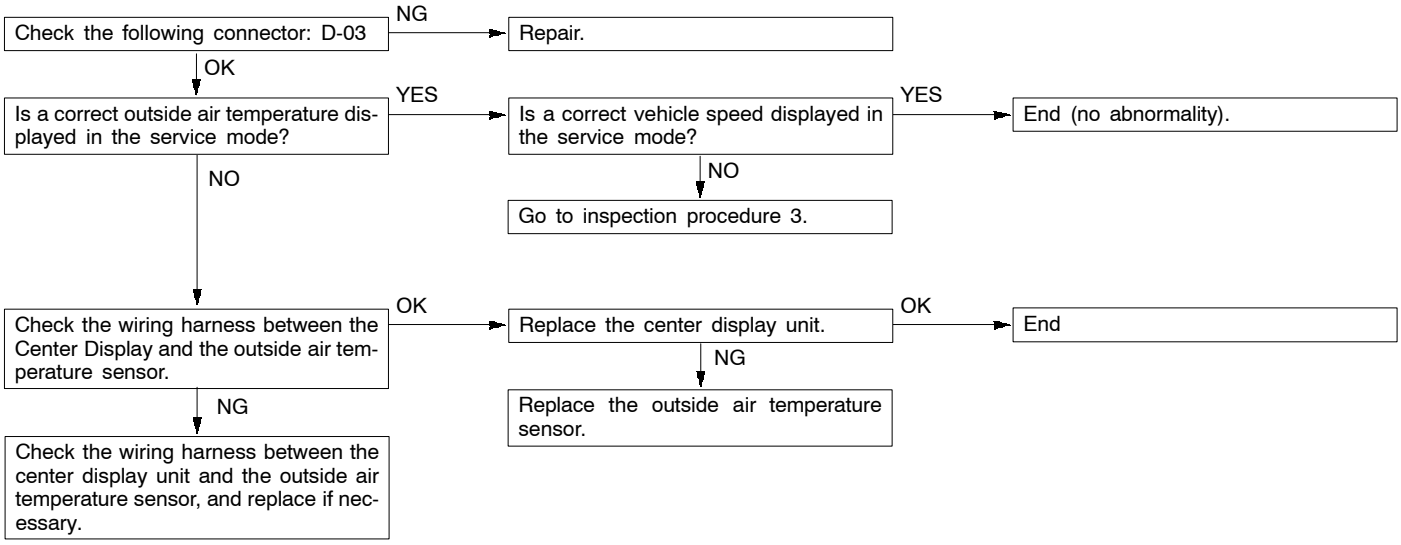


<Vehicles with automatic air conditioning system>

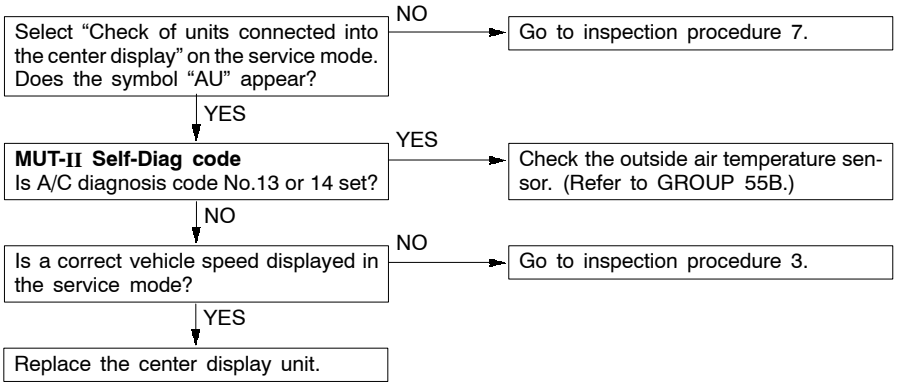


NOTE: It is necessary to drive for a while and get accurate temperature in display if you pass a area in which temperature is much different. It might show high temperature on display in case it is high around sensor due to high temperature of engine after battery is exchanged, or a display unit is reinstalled.

Purchased from www.WorkshopManuals.co.uk

www.WorkshopManuals.co.uk

## INSPECTION PROCEDURE 3

Abnormal vehicle speed is displayed on the service mode.

### <Petrol-powered vehicles>

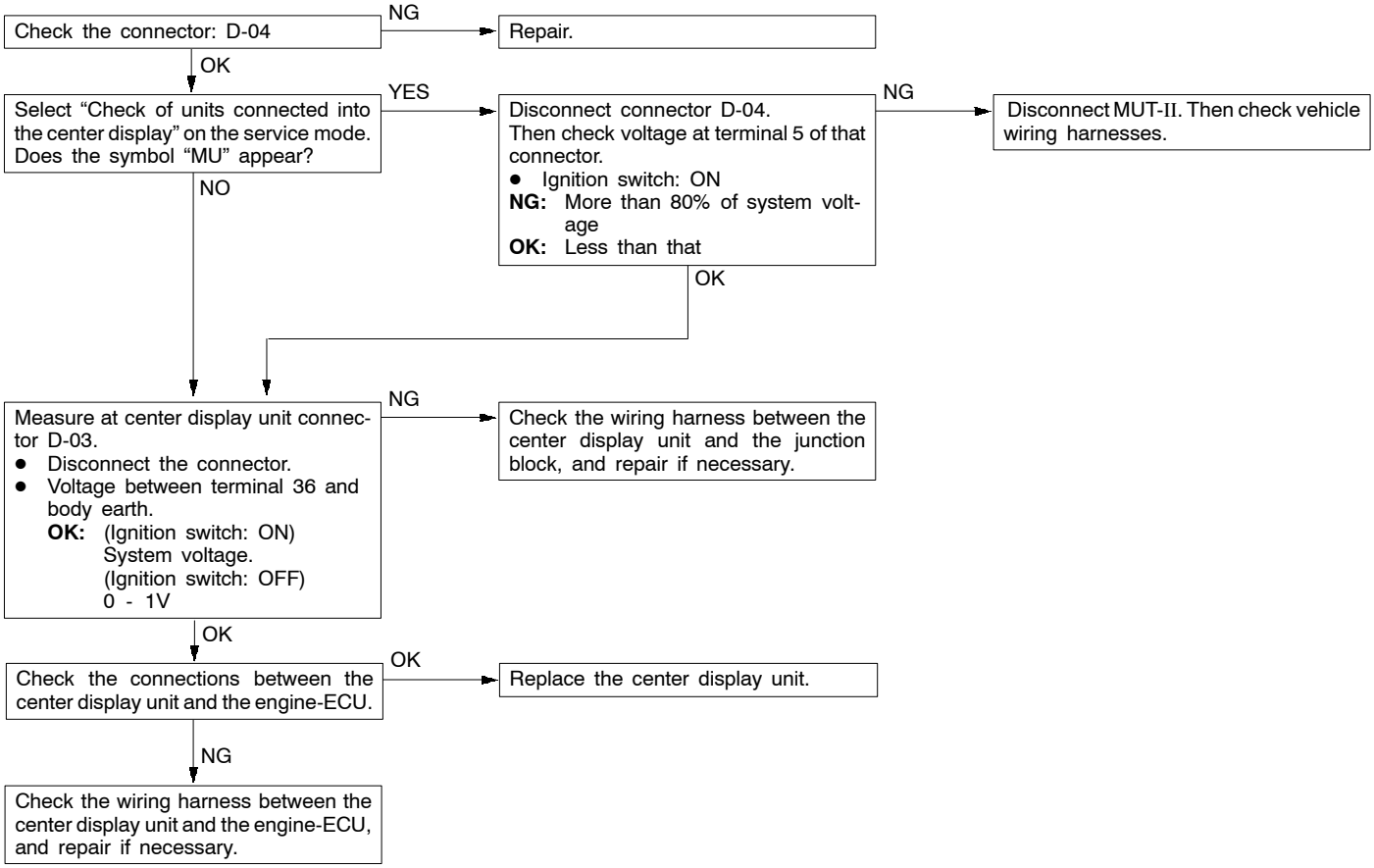


### <Diesel-powered vehicles>

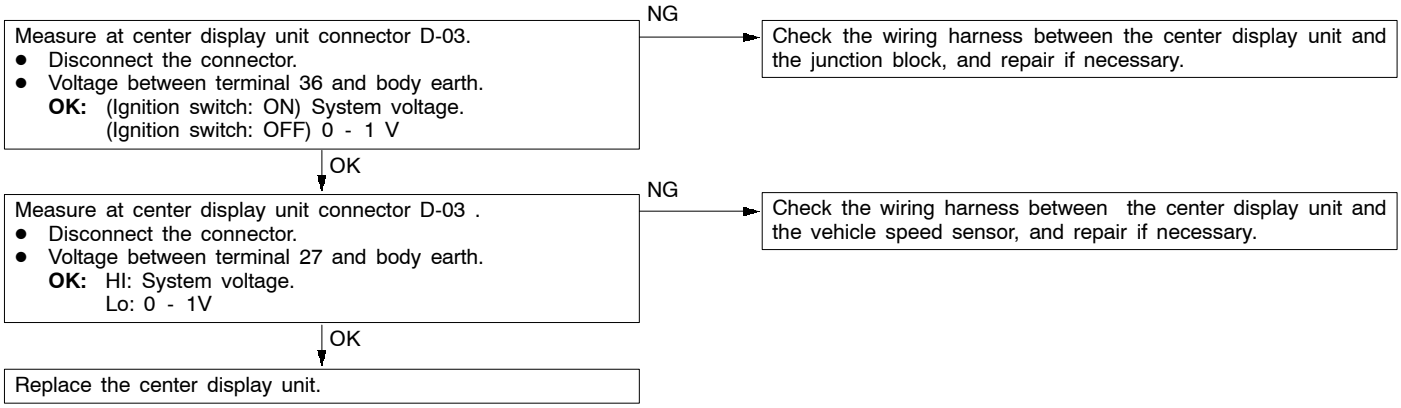


Purchased from www.WorkshopManuals.co.uk

www.WorkshopManuals.co.uk

## INSPECTION PROCEDURE 4

Abnormal driving data are displayed:

- Abnormal average fuel consumption (momentary fuel consumption) and average vehicle speed
- Abnormal cruising distance

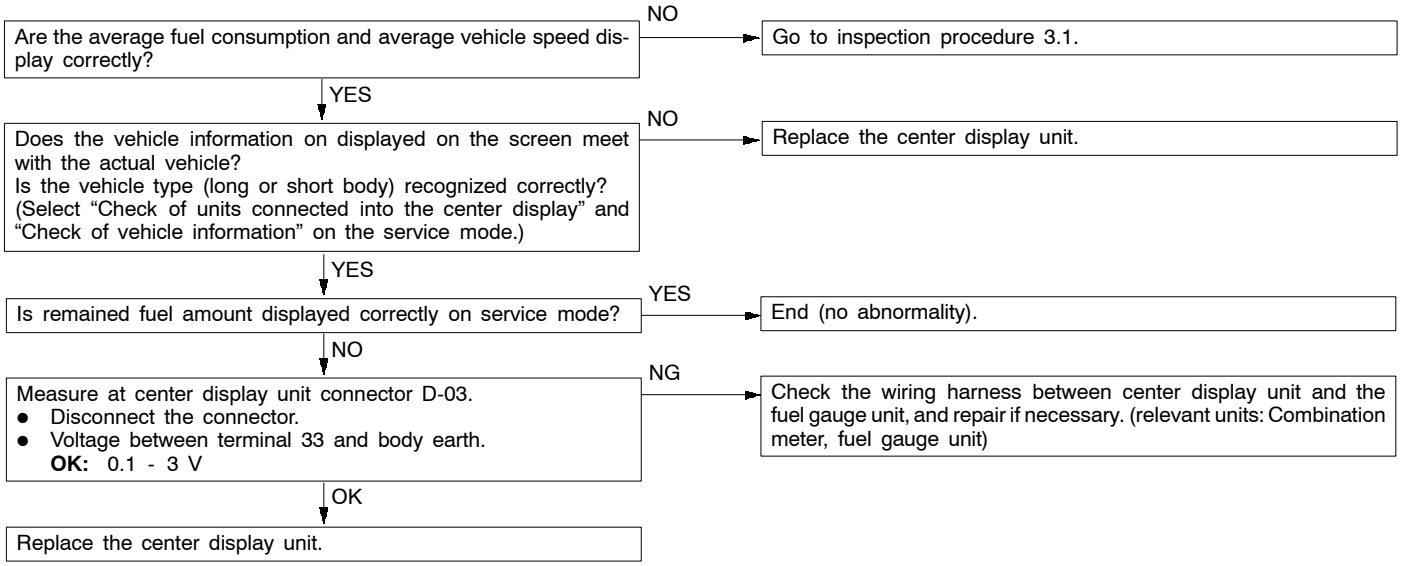


NOTE

(1) If the remained fuel amount is so small that the fuel gauge unit can not detect a correct amount, incorrect cruising range may be displayed.

(2) Fuel consumption is updated each time fuel is supplied. Furthermore, the cruising range depends on road and driving conditions.

## INSPECTION PROCEDURE 5

Clock runs fast or slow.

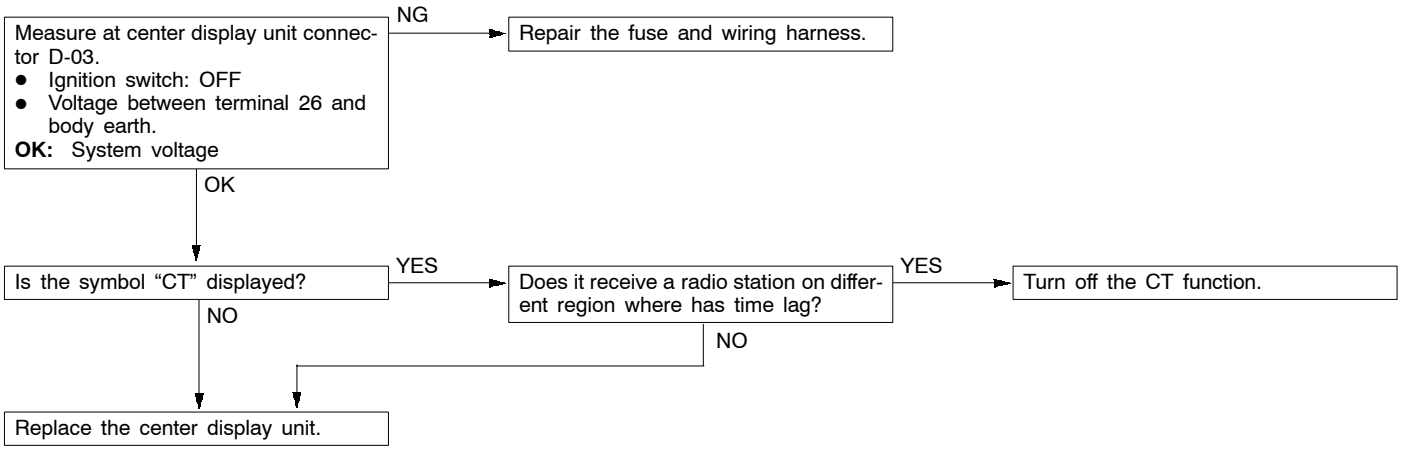


Purchased from www.WorkshopManuals.co.uk

www.WorkshopManuals.co.uk

## INSPECTION PROCEDURE 6

The display screen is dim.

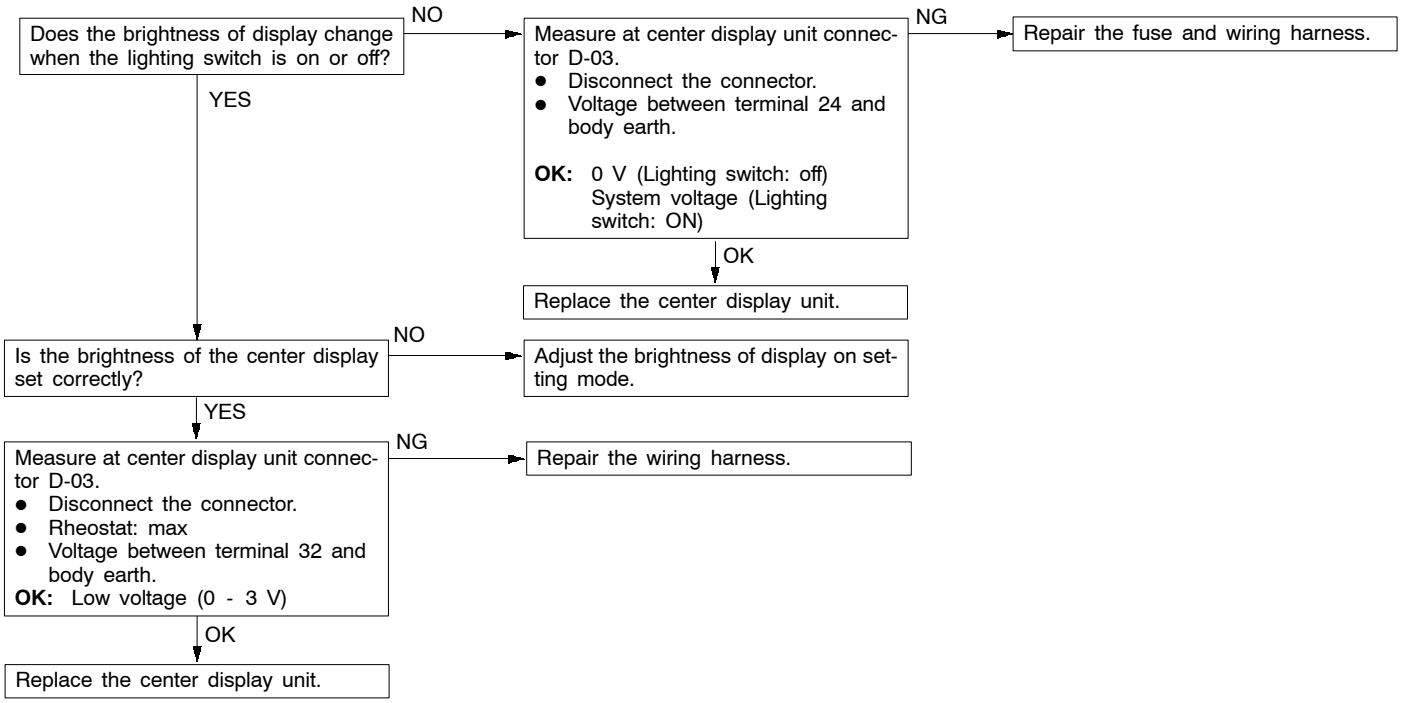


Purchased from www.WorkshopManuals.co.uk

www.WorkshopManuals.co.uk

## INSPECTION PROCEDURE 7

Air conditioning display is not available.

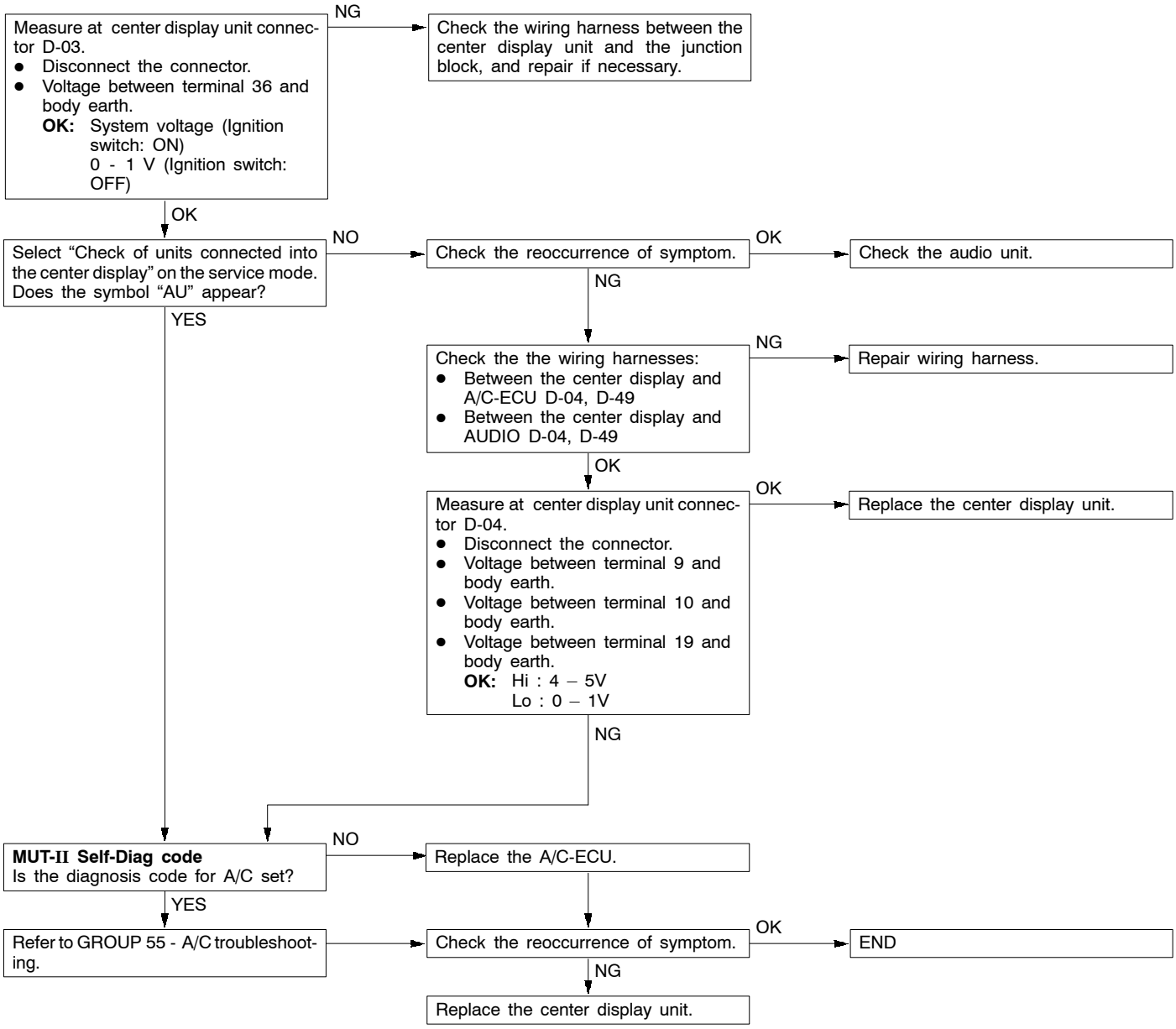


Purchased from www.WorkshopManuals.co.uk

www.WorkshopManuals.co.uk

# CLOCK OR CENTER DISPLAY

## REMOVAL AND INSTALLATION

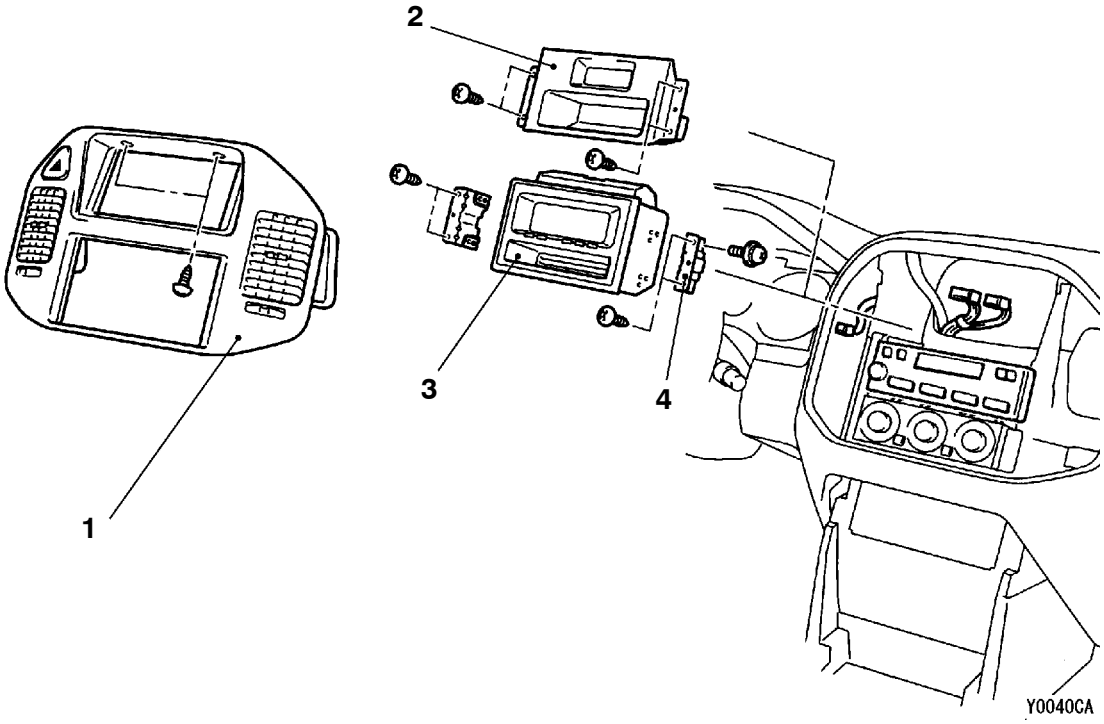


**Removal steps**

1. Center panel
   (Refer to GROUP 52A - Instrument Panel.)
2. Clock
3. Center display
4. Bracket

Purchased from www.WorkshopManuals.co.uk

www.WorkshopManuals.co.uk

# RADIO/TAPE PLAYER

## TROUBLESHOOTING

### QUICK-REFERENCE TROUBLESHOOTING CHART

| Items | Problem symptom | Relevant chart |
|---|---|---|
| Noise | Noise appears at certain places when travelling. | A-1 |
| | Mixed with noise, only at night. | A-2 |
| | Broadcasts can be heard but UKW/MW/LW has a lot of noise. | A-3 |
| | There is noise when starting the engine. | A-4 |
| | Some noise appears when there is vibration or shocks during travelling. | A-5 |
| | Ever-present noise. | A-6 |
| Radio | When switch is set to ON, no power is available. | B-1 |
| | No sound from one speaker. | B-2 |
| | There is noise but no reception for UKW/MW/LW or no sound from UKW/MW/LW. | B-3 |
| | Insufficient sensitivity. | B-4 |
| | Distortion on UKW/MW/LW. | B-5 |
| | Too few automatic select stations. | B-6 |
| | Insufficient memory (preset stations are erased). | B-7 |
| Tape player | Cassette tape will not be inserted. | C-1 |
| | No sound. | C-2 |
| | No sound from one speaker. | C-3 |
| | Sound quality is poor, or sound is weak. | C-4 |
| | Cassette tape will not be ejected. | C-5 |
| | Uneven revolution. Tape speed is fast or slow. | C-6 |
| | Faulty auto reverse. | C-7 |
| | Tape gets caught in mechanism. | C-8 |

Purchased from www.WorkshopManuals.co.uk

www.WorkshopManuals.co.uk

# CHART

## A. NOISE

### A-1 Noise appears at certain places when travelling.

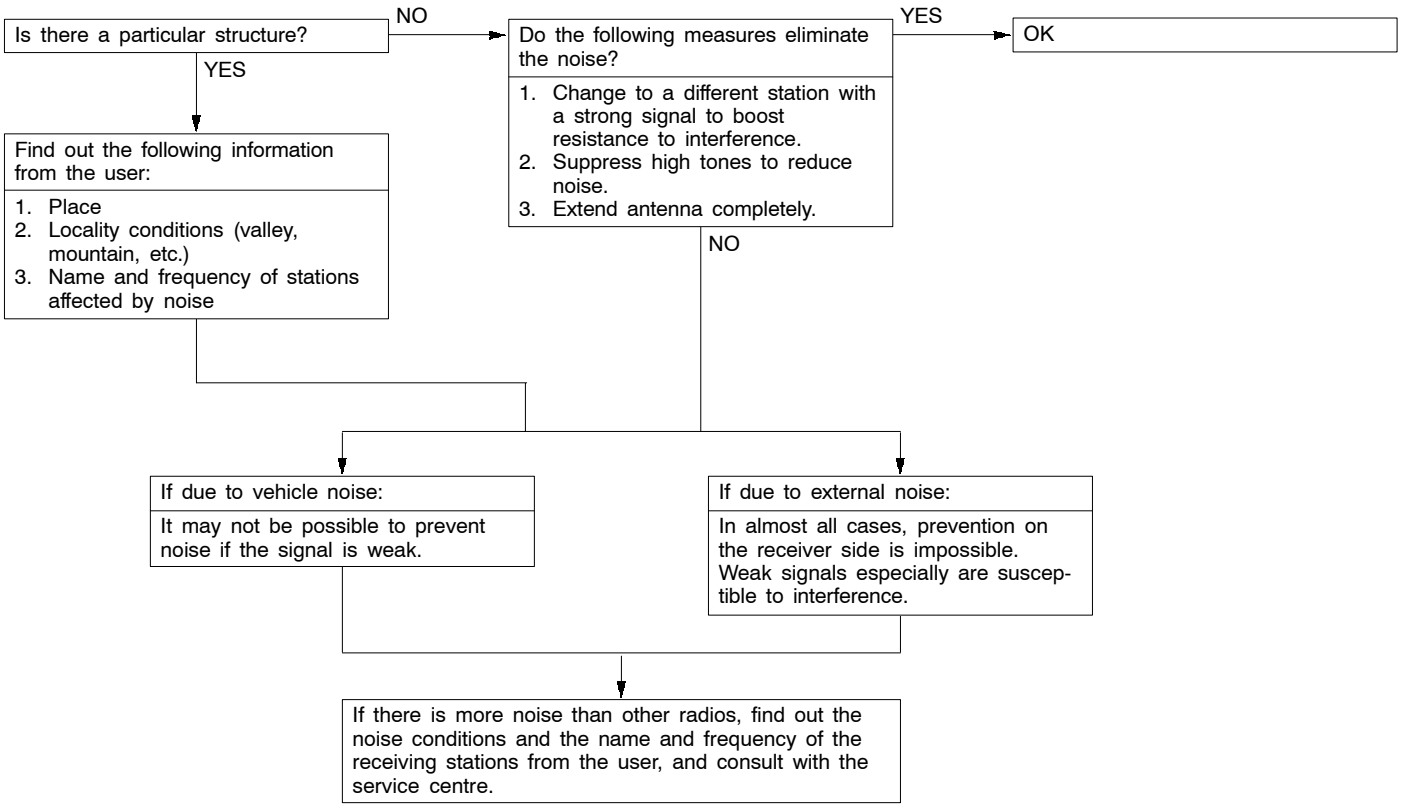


Purchased from www.WorkshopManuals.co.uk

www.WorkshopManuals.co.uk

## A-2 Mixed with noise, only at night.

The following factors can be considered as possible causes of noise appearing at night.

1. Factors due to signal conditions: Due to the fact that long-distance signals are more easily received at night, even stations that are received without problem during the day may experience interference in a general worsening of reception conditions. The weaker a station is the more susceptible it is to interference, and a change to a different station or the appearance of a beating sound* may occur. Beat sound*: Two signals close in frequency interfere with each other, creating a repetitious high-pitched sound. This sound is generated not only by sound signals but by electrical waves as well.
2. Factors due to vehicle noise: Alternator noise may be a cause.

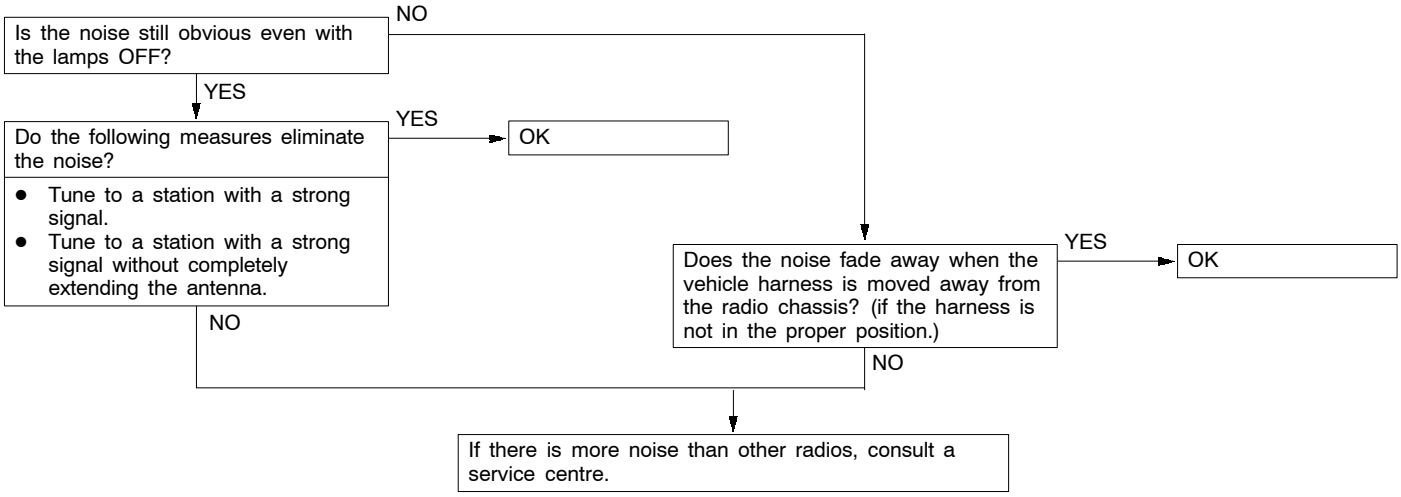


Purchased from www.WorkshopManuals.co.uk

www.WorkshopManuals.co.uk

## A-3 Broadcasts can be heard but UKW/MW/LW has a lot of noise.

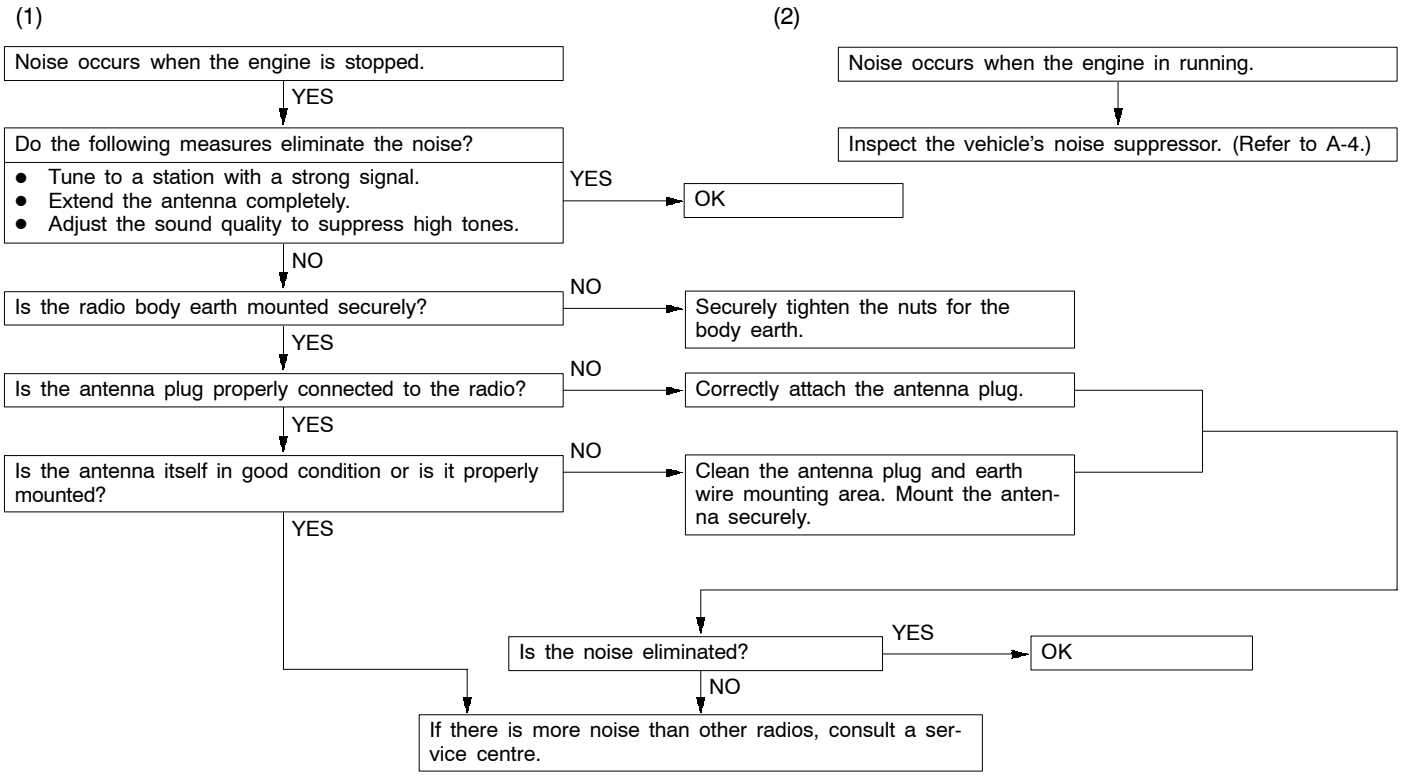


Purchased from www.WorkshopManuals.co.uk

www.WorkshopManuals.co.uk

**A-4 There is noise when starting the engine.**

| Noise type Sounds are in parentheses ( ). | Conditions | Cause | Remedy |
|---|---|---|---|
| UKW/MW/LW: Ignition noise (Popping, snapping, cracking, buzzing) | • Increasing the engine speed causing the popping sound to speed up, and volume decreases.<br>• Disappears when the ignition switch is turned to ACC. | • Mainly due to the spark plugs.<br>• Due to the engine noise. | • Check or replace the earth cable. (Refer to Fig. 1, 2, 3 and 4 on P.54-58 and 54-59.)<br>• Check or replace the noise capacitor. |
| Other electrical components | - | Noise may appear as electrical components become older. | Repair or replace electrical components. |
| Static electricity (Cracking, crinkling) | • Disappears when the vehicle is completely stopped.<br>• Severe when the clutch is engaged. | Occurs when parts or wiring move for some reason and contact metal parts of the body. | Return parts or wiring to their proper position. |
| | • Various noises are produced depending on the body part of the vehicle. | Due to detachment from the body of the front hood, bumpers, exhaust pipe and muffler, suspension, etc. | Tighten the mounting bolts securely. Cases where the problem is not eliminated by a single response to one area are common, due to several body parts being imperfectly earthed. |

**Caution**

1. **Connecting a high tension cable to the noise filter may destroy the noise filter and should never be done.**
2. **Check that there is no external noise. Since failure caused by this may result in misdiagnosis due to inability to identify the noise source, this operation must be performed.**
3. **Noise prevention should be performed by suppressing strong sources of noise step by step.**

NOTE

1. Capacitor
   The capacitor does not pass D.C. current, but as the number of waves increases when it passes A.C. current, impedance (resistance against A.C.) decreases, and current flow is facilitated. A noise suppressing condenser which takes advantage of this property is inserted between the power line for the noise source and the earth. This suppresses noise by earthing the noise component (A.C. or pulse signal) to the body of the vehicle.
2. Coil
   The coil passes D.C. current, but impedance rises as the number of waves increases relative to the A.C. current. A noise suppressing coil which takes advantage of this property is inserted into the power line for the noise source, and works by preventing the noise component from flowing or radiating out of the line.

**Fig. 1 <4D56>**

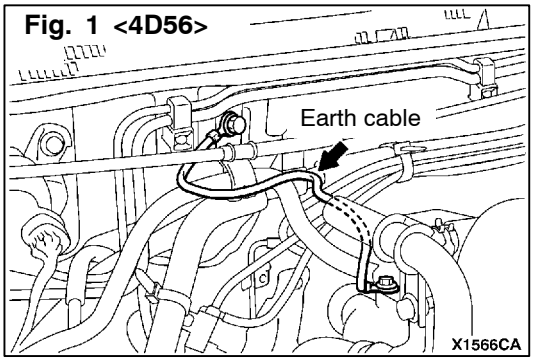


**Fig. 2 <4M41>**

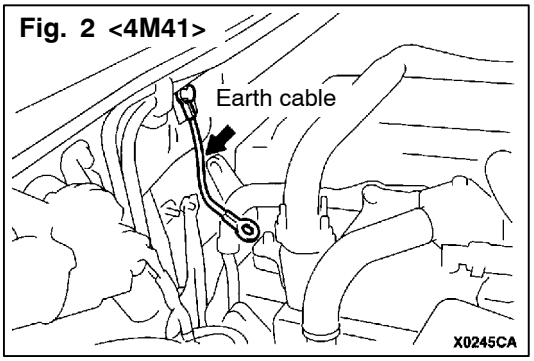


Purchased from www.WorkshopManuals.co.uk

www.WorkshopManuals.co.uk

Fig. 3 <6G74-GDI>

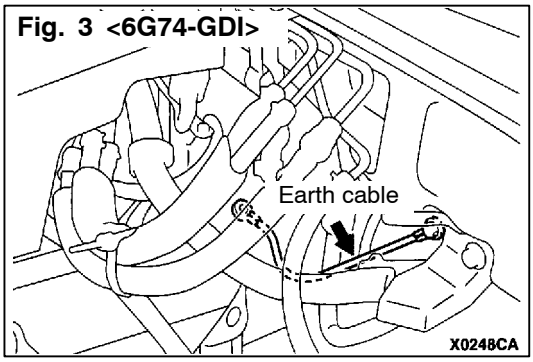


Fig. 4

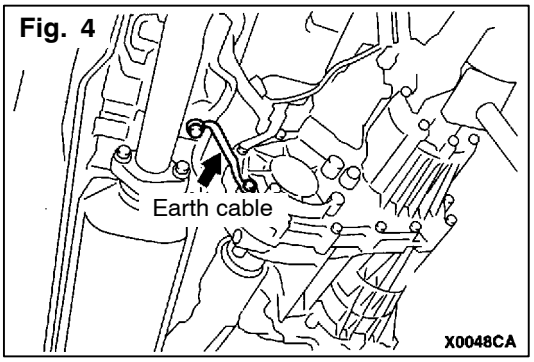


## A-5 Some noise appears when there is vibration or shocks during travelling.

- Are connectors properly connected?
  - NO → Ensure proper connection.
  - YES ↓
- Does noise appear when the radio switch is turned on while the vehicle is stopped and the radio is struck while tuned away from a station?
  - NO → Static electricity noise: Body static electric from the shock absorber rubber bushings used to prevent vibration, tyres, etc. occurs because of separation from the earth, causing a buzzing noise. Since no measures can be taken on the radio side, other steps should be taken to discharge the static electricity of the vehicle body.
  - YES ↓
- Is the radio correctly earthed? (Is the mounting screw tightened securely?)
  - NO → Tighten the screw securely.
  - YES ↓
- Is the antenna correctly earthed? (If noise appears when the antenna is moved, this means the earth is not securely connected.)
  - NO → If rust is present at the antenna earth screw, clean and tighten the earth securely.
  - YES ↓
- Repair or replace radio.

## A-6 Ever-present noise.

Noise is often created by the following factors, and often the radio is OK when it is checked individually.

- Travelling conditions of the vehicle
- Terrain of area travelled through
- Surrounding buildings
- Signal conditions
- Time period

For this reason, if there are still problems with noise even after the measures described in steps A-1 to A-8 have been taken, get information on the factors listed above as well as determining whether the problem occurs with UKW/MW/LW, the station names, frequencies, etc., and contact a service centre.

Purchased from www.WorkshopManuals.co.uk

www.WorkshopManuals.co.uk

## B. RADIO

### B-1 No power is supplied when the switch is set to ON.

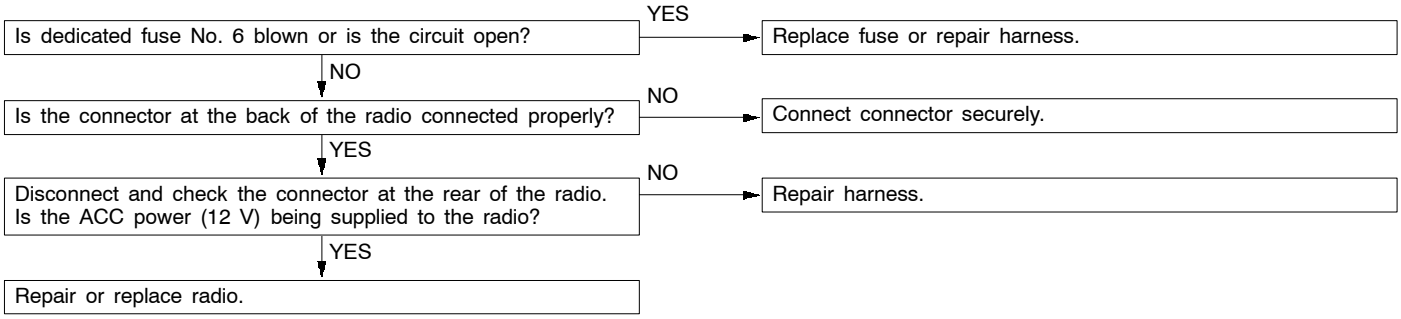


### B-2 No sound from one speaker.

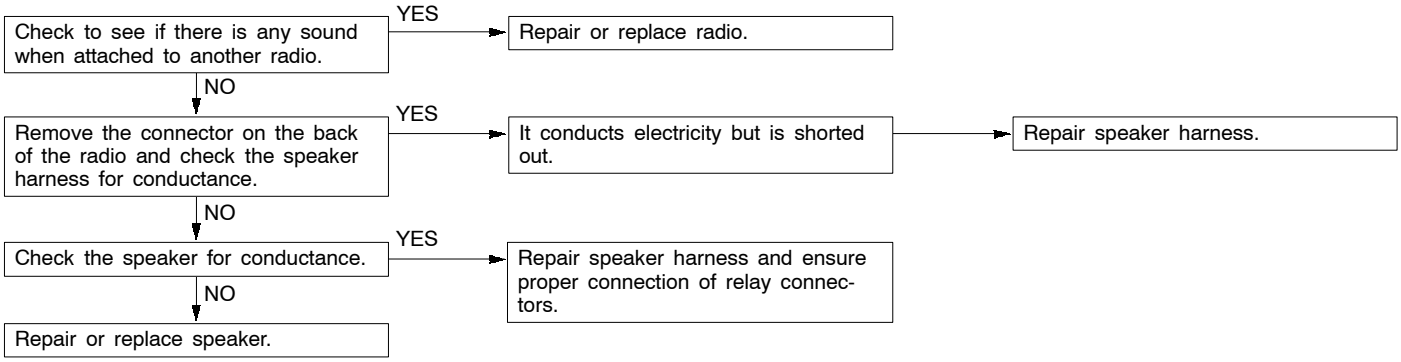


Purchased from www.WorkshopManuals.co.uk

www.WorkshopManuals.co.uk

## B-3 There is noise but no reception for UKW/MW/LW or no sound from UKW/MW/LW.

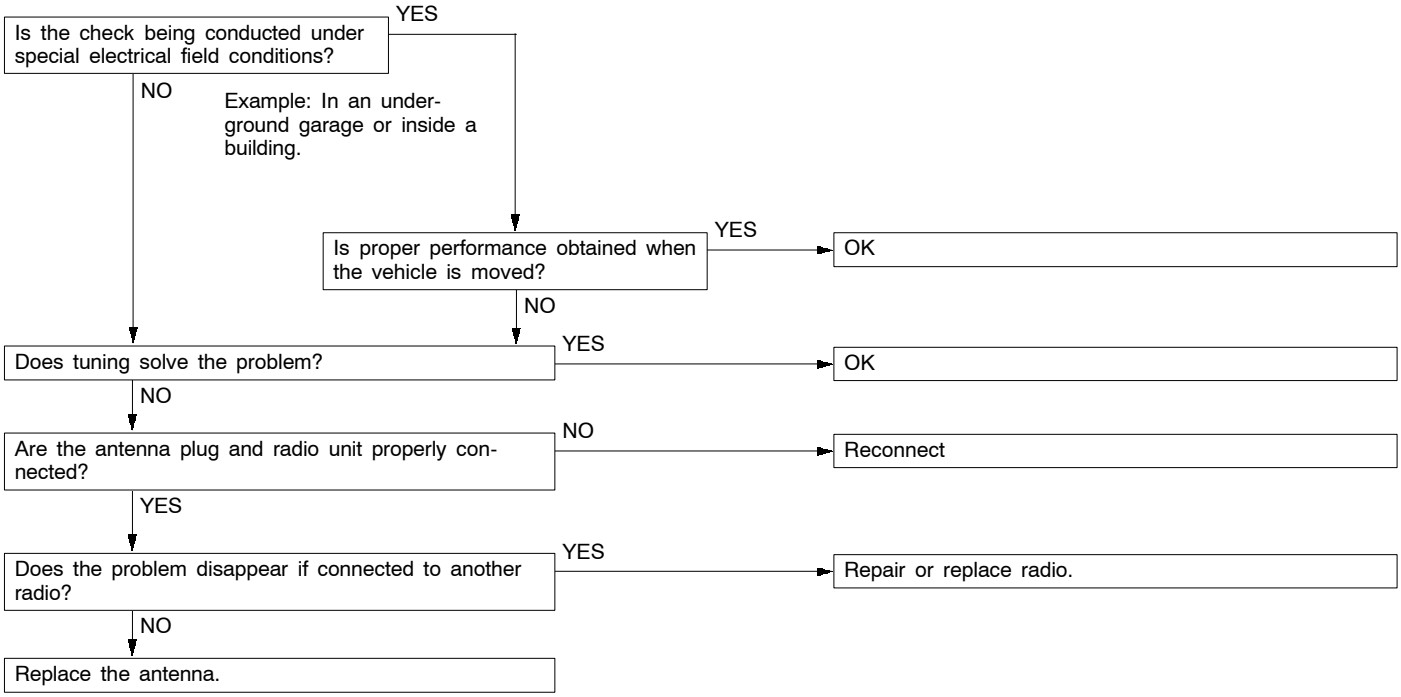


## B-4 Insufficient sensitivity.

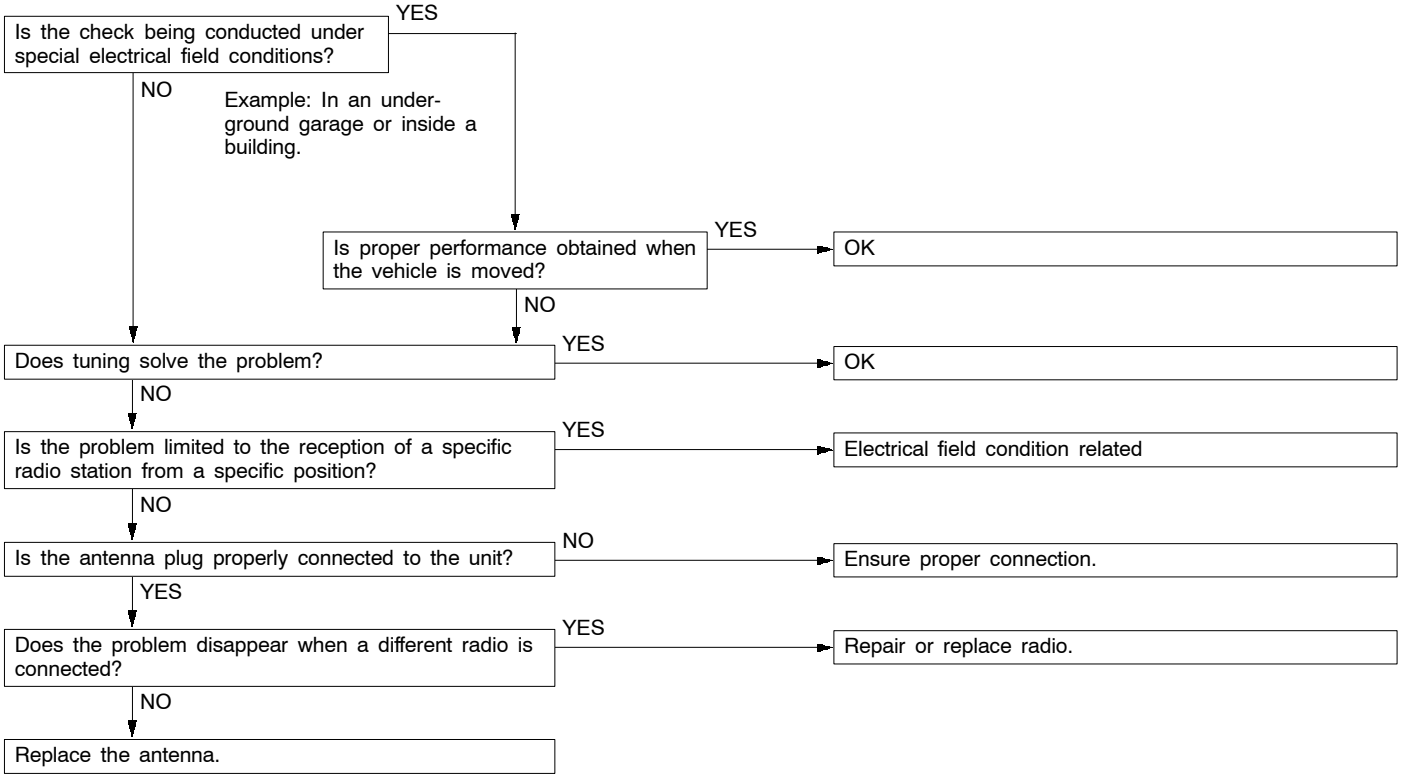


Purchased from www.WorkshopManuals.co.uk

www.WorkshopManuals.co.uk

## B-5 Distortion on UKW/MW/LW.

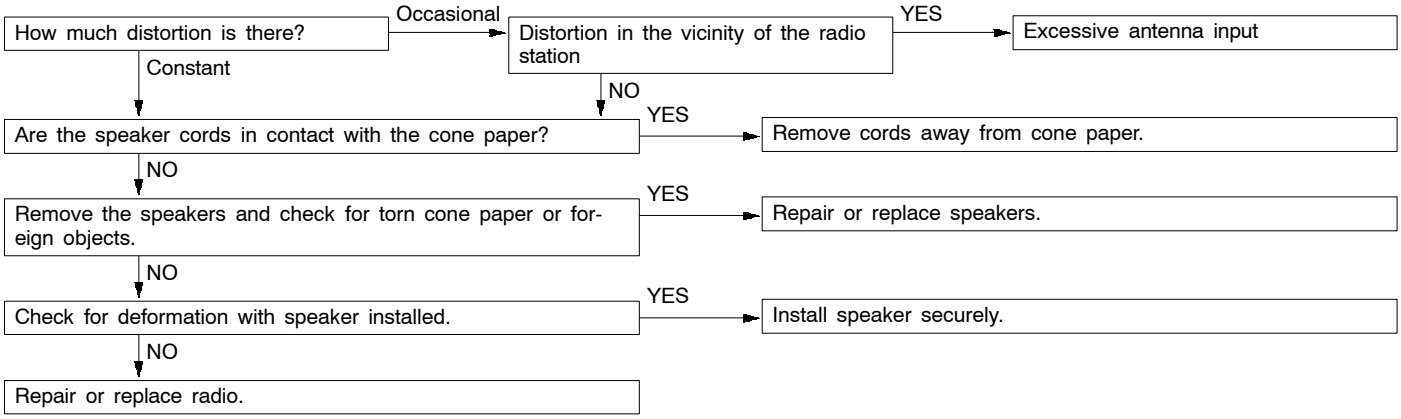


## B-6 Too few automatic select stations.

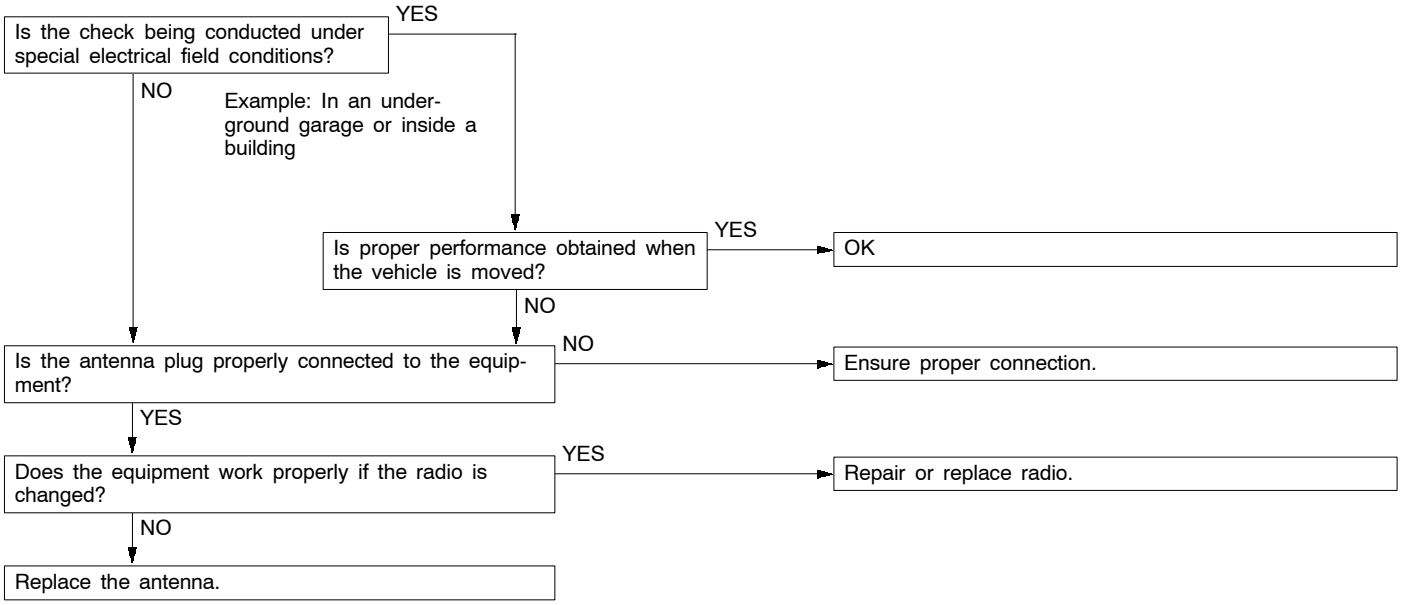


Purchased from www.WorkshopManuals.co.uk

www.WorkshopManuals.co.uk

## B-7 Insufficient memory (preset stations are erased).

- Is dedicated fuse No. 5 blown or is the circuit open?
  - YES → Replace fuse or repair harness.
  - NO ↓
- Disconnect and check the connector at the rear of the radio. Is the memory backup (battery) power being supplied?
  - NO → Repair harness.
  - YES ↓
- Repair or replace radio.

# C. TAPE PLAYER

## C-1 Cassette tape will not be inserted.

- Are there any foreign objects in the tape player?
  - YES → Remove the object(s)*1 .
  - NO ↓
- Does the tape player work if another tape is inserted?
  - YES → Replace tape*2 .
  - NO ↓
- Repair or replace tape player.

*1
Attempting to force a foreign object (e.g., a coin or clip, etc.) out of the tape player may damage the mechanism. The player should be taken to a service dealer for repair.

*2
Ensure that the tape label is not loose, that the tape itself is not deformed and that the tape is tightly wound. Also, tape of C-120 or greater length often get caught in the mechanism and should not be used.

## C-2 No sound (even after a tape has been inserted).

- Is dedicated fuse No. 6 blown or is the circuit open?
  - YES → Replace fuse or repair harness.
  - NO ↓
- Is connector at rear of radio connected tightly?
  - NO → Connect connector firmly.
  - YES ↓
- Disconnect connector at rear of radio. Is ACC power being supplied to the radio?
  - YES → Repair or replace tape player.
  - NO ↓
- Repair harness.

Purchased from www.WorkshopManuals.co.uk

www.WorkshopManuals.co.uk

## C-3 No sound from one speaker.

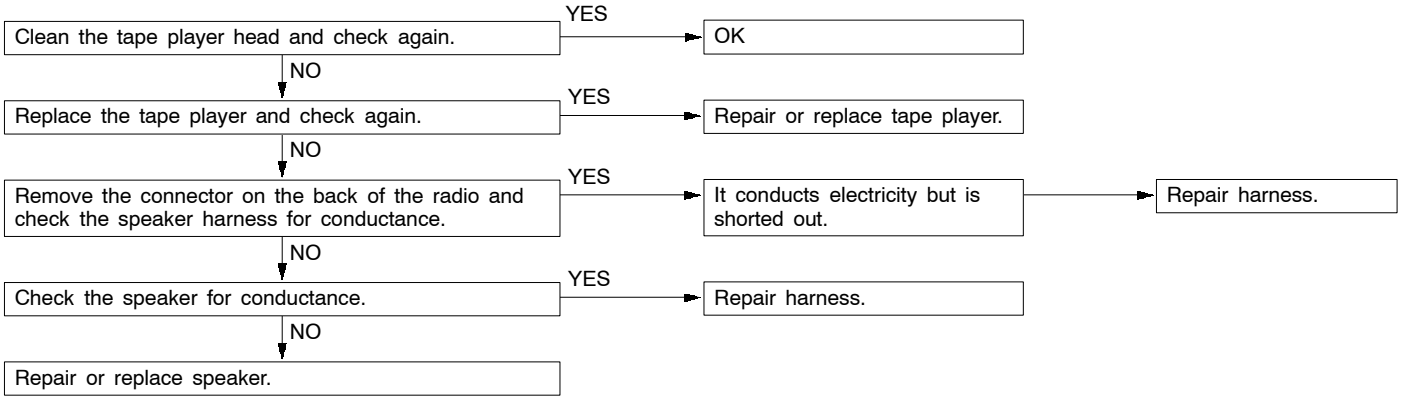


## C-4 Sound quality is poor, or sound is weak.

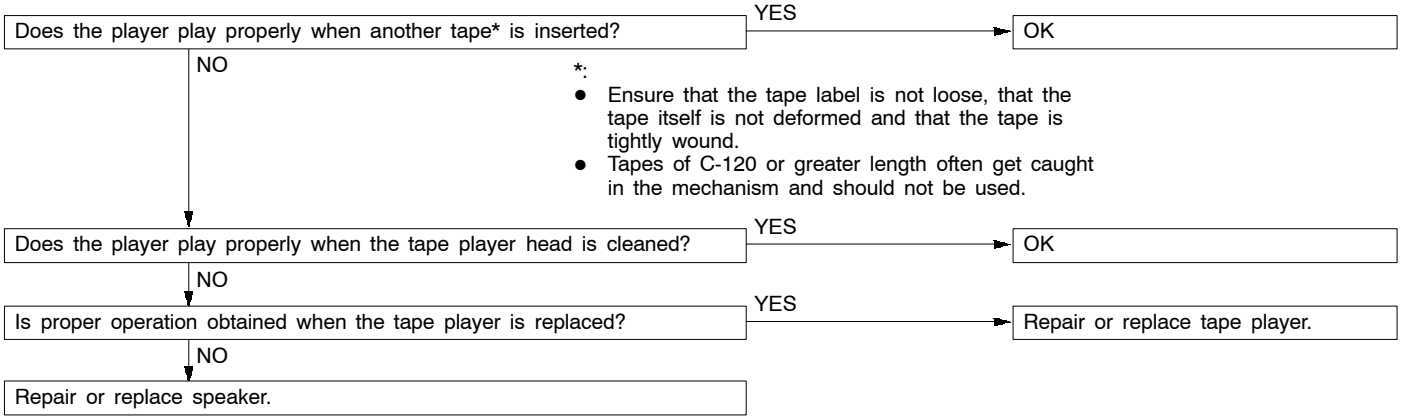


## C-5 Cassette tape will not be ejected.

The problems covered here are all the result of the use of a bad tape (deformed or not properly tightened) or of a malfunction of the tape player itself. Malfunctions involving the tape becoming caught in the mechanism and ruining the case are also possible, and attempting to force the tape out of the player can cause damage to the mechanism. The player should be taken to a service dealer for repair.

Purchased from www.WorkshopManuals.co.uk

www.WorkshopManuals.co.uk

## C-6 Uneven revolution. Tape speed is fast or slow.

Does the player play OK if the tape*1 is changed?
- YES → OK
- NO ↓

*1
Ensure that the tape label is not loose, that the tape itself is not deformed and that the tape is tightly wound. Also, tape of C-120 or greater length often get caught in the mechanism and should not be used.

Are there any foreign objects *2 inside the tape player?
- YES → Remove foreign object(s).
- NO ↓

*2
Attempting to force a foreign object (e.g., a coin or clip, etc.) out of the tape player may damage the mechanism. The player should be taken to a service dealer for repair.

Is the head or capstan roller dirty? (Refer to the illustration below.)
- YES → Clean.
- NO ↓

Repair or replace tape player.

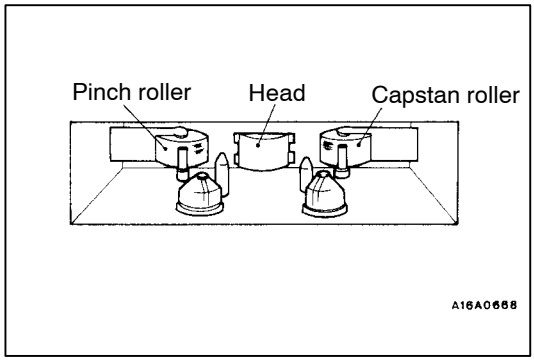


## C-7 Faulty auto reverse.

Does the player play OK if the tape* is changed?
- YES → OK
- NO ↓

*:
- Ensure that the tape label is not loose, that the tape itself is not deformed and that the tape is tightly wound.
- Tapes of C-120 or greater length often get caught in the mechanism and should not be used.

Does the problem only occur while the vehicle is being driven?
- NO → Repair or replace tape player.
- YES ↓

Is the tape player properly installed to the vehicle?
- NO → Ensure tape player installation.
- YES ↓

Repair or replace tape player.

Purchased from www.WorkshopManuals.co.uk

www.WorkshopManuals.co.uk

## C-8 Tape gets caught in mechanism*1.

*1
When the tape is caught in the mechanism, the case may not eject. When this occurs, do not try to force the tape out as this may damage the tape player mechanism. Take the cassette to a service dealer for repair.

Does the player play OK if the tape*2 is changed?

YES → Tape used is bad.

NO → Repair or replace tape player.

*2
Ensure that the tape label is not loose, that the tape itself is not deformed and that the tape is tightly wound. Also, tapes of C-120 or greater length often get caught in the mechanism and should not be used.

Purchased from www.WorkshopManuals.co.uk

www.WorkshopManuals.co.uk

# RADIO AND CD AUTO CHANGER

## REMOVAL AND INSTALLATION

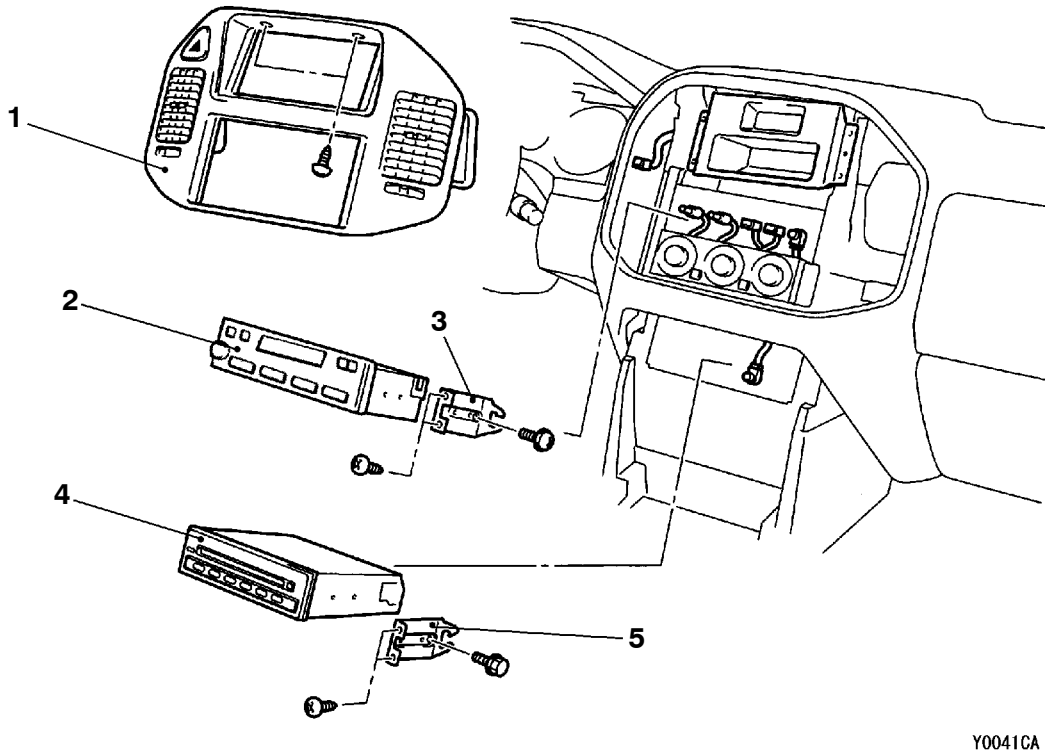


**Radio removal steps**

1. Center panel
   (Refer to GROUP 52A - Instrument Panel.)
2. Radio/tape player
3. Radio/tape player bracket

**CD auto changer removal steps**

- Lower center panel
  (Refer to GROUP 52A - Instrument Panel.)

4. CD auto changer
5. CD auto changer bracket

Purchased from www.WorkshopManuals.co.uk

www.WorkshopManuals.co.uk

# FRONT SPEAKERS

## REMOVAL AND INSTALLATION

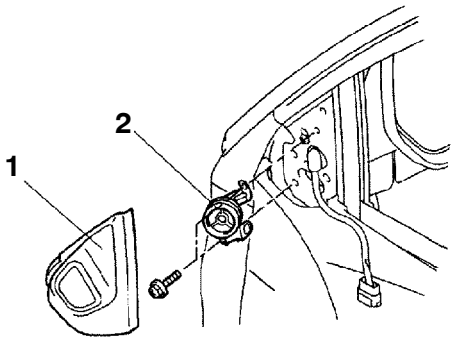


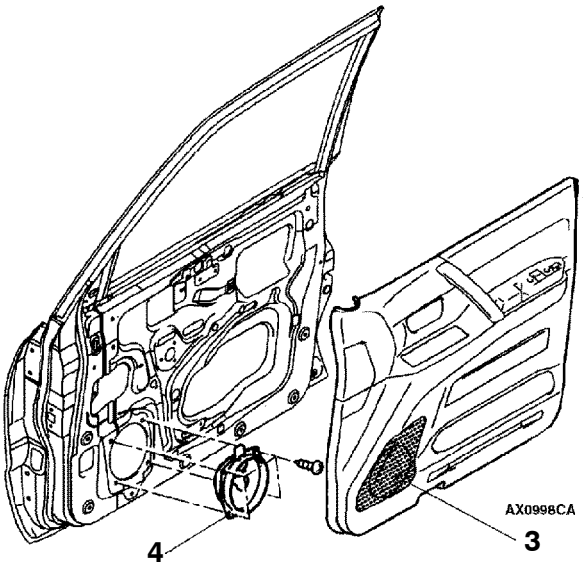


**Tweeter removal steps**

1. Delta inner cover
2. Tweeter

**Front door speaker removal steps**

3. Front door trim (Refer to GROUP 42.)
4. Front door speaker

# REAR SPEAKERS

## REMOVAL AND INSTALLATION

**<Short wheelbase>**

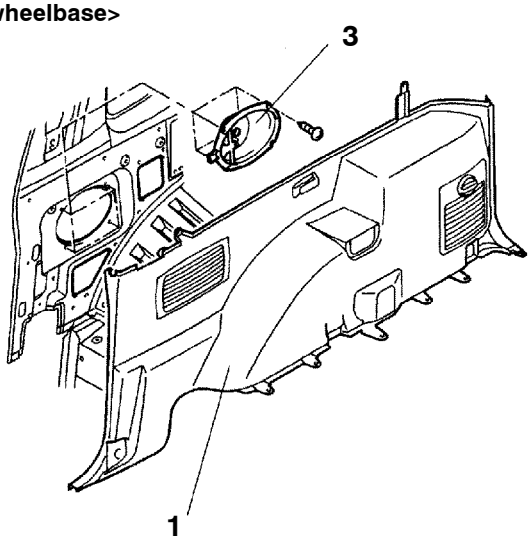


**<Long wheelbase>**

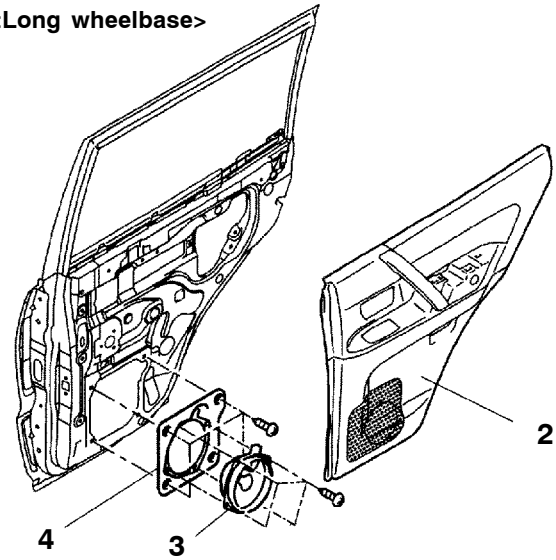


**Removal steps**

1. Lower quarter trim (Refer to GROUP 52A - Instrument Panel.)
2. Rear door trim (Refer to GROUP 52A - Instrument Panel.)
3. Rear speakers
4. Rear speaker bracket

Purchased from www.WorkshopManuals.co.uk

www.WorkshopManuals.co.uk

# ANTENNA

## REMOVAL AND INSTALLATION

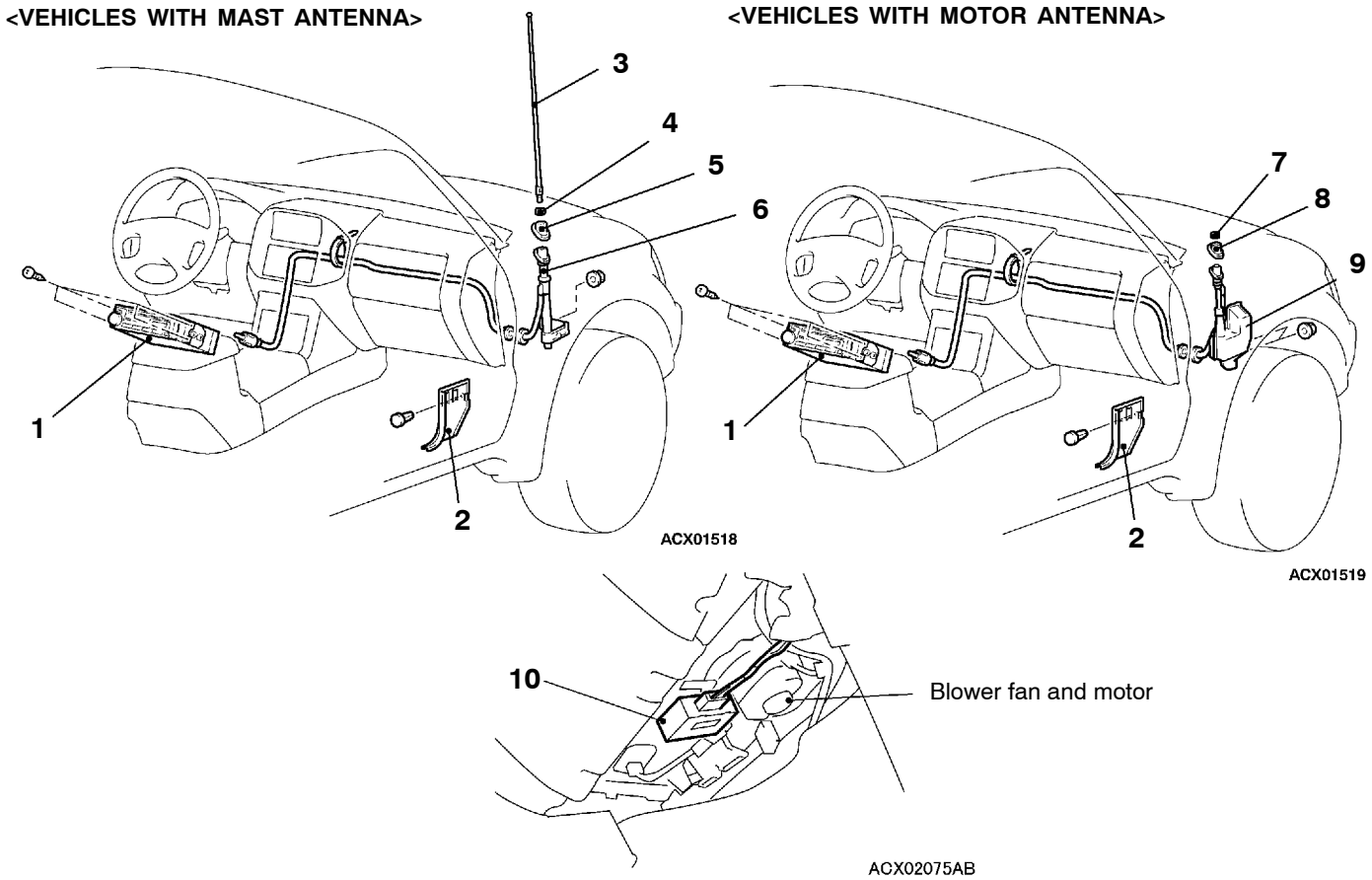


**Mast antenna removal steps**

- Center panel (Refer to GROUP 52A – Instrument Panel.)

1. Radio/tape player (Refer to P.54-81.)
2. Scuff plate, cowl side trim (Refer to GROUP 52A.)
3. Mast antenna
4. Mounting nut
5. Base
6. Mast antenna body

◀A▶

◀B▶

**Motor antenna removal steps**

- Center panel (Refer to GROUP 52A – Instrument Panel.)

1. Radio/tape player (Refer to P.54-81.)
2. Scuff plate, cowl side trim (Refer to GROUP 52A.)
7. Ring nut
8. Base
9. Motor antenna body
10. Motor antenna-ECU

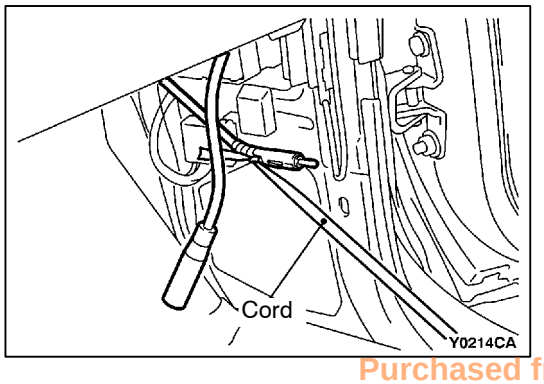


## REMOVAL SERVICE POINTS

### ◀A▶ MAST ANTENNA BADY REMOVAL

Carry out the following procedure to allow the feeder cable of the base antenna assembly for an easy installation.

1. Tie the cord with the end of the feeder cable.
2. Pull out the base antenna assembly slowly until the pipe end appears.
3. Insert the cord into the hole of the pipe end to wrap the cord around with a plastic tape.

Purchased from www.WorkshopManuals.co.uk

www.WorkshopManuals.co.uk

**Caution**
**Ensure that the cord is wrapped tightly to prevent it from coming off.**

4. Pull out the base antenna assembly slowly to remove.

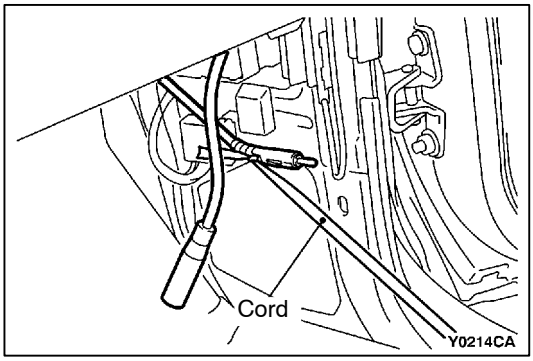


### ◀A▶ MOTOR ANTENNA BADY REMOVAL

Pull out the cord after tying it with the feeder cable of the base antenna ass'y for an easy installation.

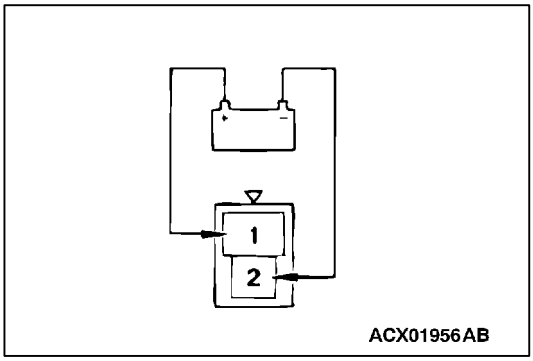


## INSPECTION

### MOTOR ANTENNA CHECK

Check the antenna for extension if the connector of the motor antenna-ECU is disconnected, the (+) terminal of the battery is connected to terminal No.1, and the (-) terminal of the battery is connected to terminal No. 2. Check the antenna for retraction if the connection is reversed.

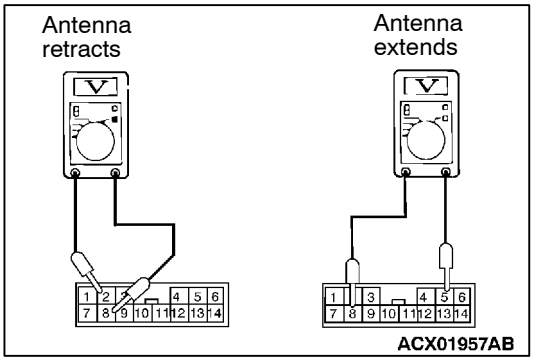


### MOTOR ANTENNA-ECU CHECK

1. Remove the motor antenna-ECU mounting bolt.
2. With the ignition switch at the ACC or the ON position, check the voltage between the terminals during extension or retraction of the antenna by operating the radio switch.

| Direction of antenna movement | Measurement terminal | Voltage (V) |
|---|---|---|
| Rectracting | 2 - 8 | 10 - 13 |
| Extending | 8 - 5 | 10 - 13 |

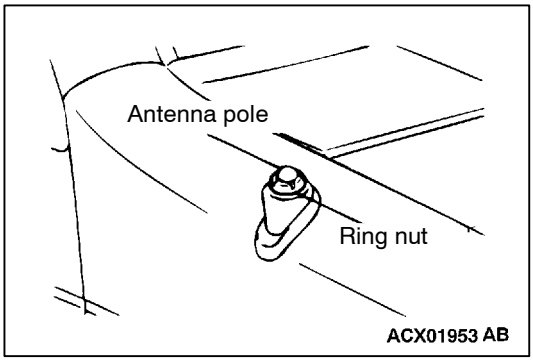


## ANTENNA POLE REPLACEMENT

1. Remove ring nut.

Purchased from www.WorkshopManuals.co.uk

www.WorkshopManuals.co.uk

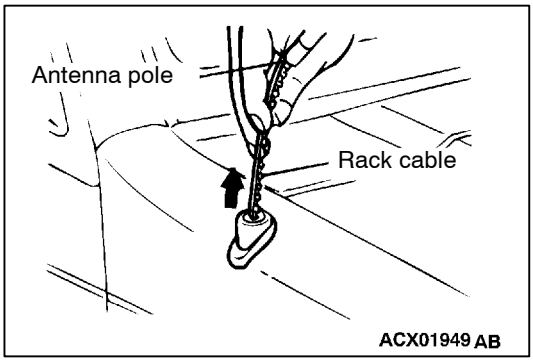


2. After the ignition switch is turned to the ACC or ON position, turn on the radio and extend the antenna pole to remove it with the rack cable.

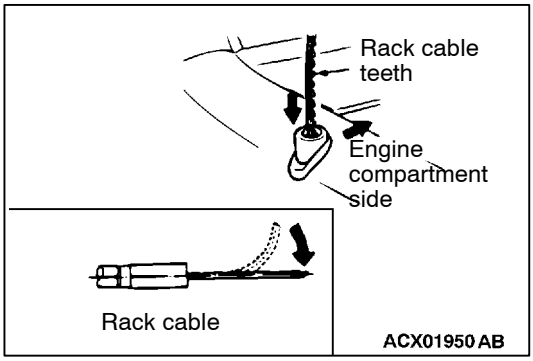


3. Extend the antenna pole completely.

   NOTE
   If there is any bend at the motor end of the rack cable, repair the bend.

4. Face the teeth of the rack cable to the engine room side to push the rack cable into the motor assembly.

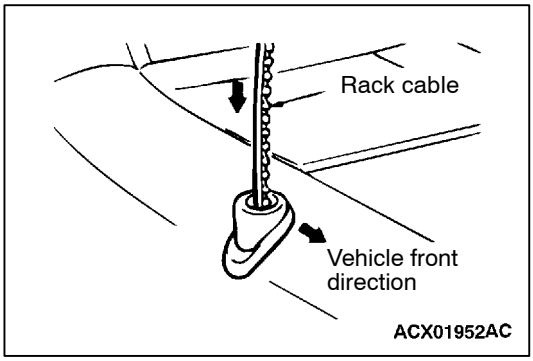


5. Rotate the teeth of the rack cable to the front of the vehicle (905 to the right) to engage the cable with the motor gears.
6. If the rack cable comes off easily by pulling it out slightly, it indicates that the rack cable does not engage with the motor gears. In that case, carry out the above-mentioned procedures in (3) and (4) after checking the end of the rack cable for bend again.
7. Set the antenna pole perpendicular and turn off the radio to wind the rack cable. Insert the antenna pole into the motor antenna side corresponding with winding the rack cable.

Purchased from www.WorkshopManuals.co.uk

www.WorkshopManuals.co.uk

# DEFOGGER

## TROUBLESHOOTING <VEHICLE WITH AUTOMATIC AIR CONDITIONER>

Refer to GROUP 55B.

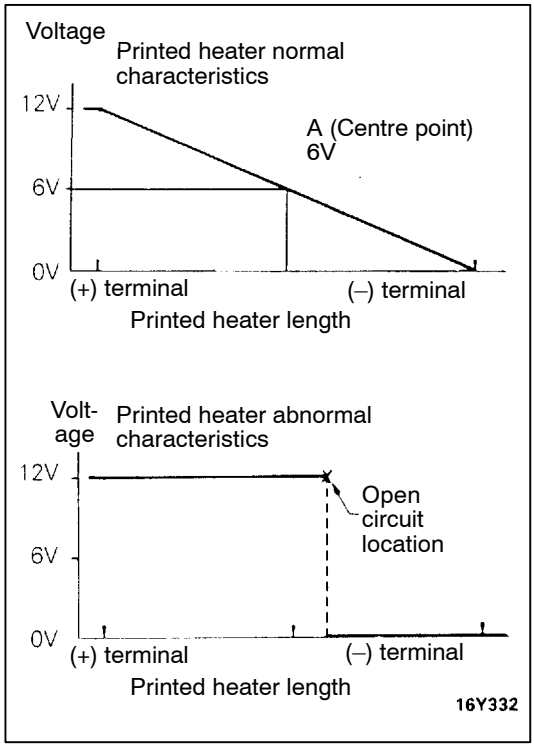


## ON-VEHICLE SERVICE

### PRINTED HEATER CHECK

1. Run the engine at a speed of 2000 r/min to fully charge the battery, and then check the printed heater.
2. With the defogger switch turned on, use a multimeter to measure the voltages of each printed heater at centre point A on the window glass. The printed heater is okay if 6 V is displayed.
3. If a voltage of 12 V is indicated at point A, the open circuit location is between point A and the (-) terminal. Move the test bar gradually towards the (-) terminal to find the point where the voltage suddenly changes (0 V). The point where the voltage changes is the location of the open circuit.
4. In addition, if a voltage of 0 V is indicated at point A, the open circuit location is between point A and the (+) terminal. Use the same procedure as described above to find the point where the voltage changed to 12 V.

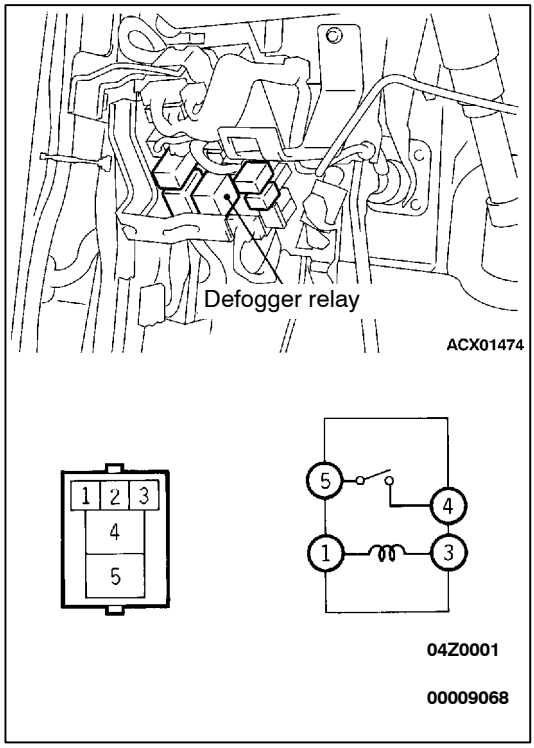


### DEFOGGER RELAY CONTINUITY CHECK

| Switch position | Terminal No. | | | |
|---|---|---|---|---|
| | 1 | 3 | 4 | 5 |
| When current is not supplied | ○ | ○ | | |
| When current is supplied | ⊕ | ⊖ | ○ | ○ |

Purchased from www.WorkshopManuals.co.uk

www.WorkshopManuals.co.uk

# DEFOGGER SWITCH <VEHICLE WITH MANUAL AIR CONDITIONER>

## REMOVAL AND INSTALLATION

Refer to GROUP 55A - Heater Control Assembly, A/C Switch, Ventilation Switch.

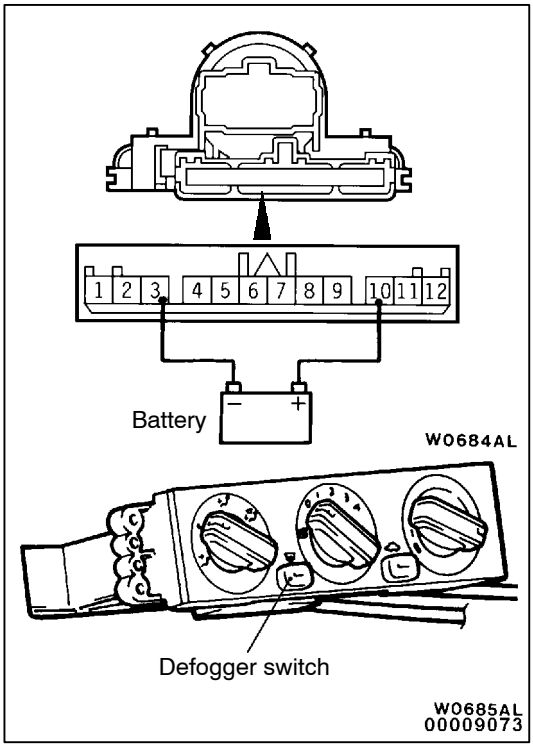


## INSPECTION

### DEFOGGER SWITCH CONTINUITY CHECK

Check the battery voltage between terminal 3 and 10 while being energized.

| Switch position | Terminal No. | | | | |
|---|---|---|---|---|---|
| | 3 | 10 | - | 11 | 12 |
| OFF | ○ | | IND | ○ | |
| | ⊖ | ⊕ | | | |
| ON | ○ | | IND | ○ | |
| | ⊖ | ⊕ | | | |
| | ○ | | | | ○ |

NOTE

After turning the defogger switch to the ON position, check the continuity between terminal 3 and 12 for 9 to 13 minutes. Afterwards, the switch is turned to the OFF position.

Purchased from www.WorkshopManuals.co.uk

www.WorkshopManuals.co.uk

**NOTES**

Purchased from www.WorkshopManuals.co.uk

www.WorkshopManuals.co.uk

# Service Bulletins

**Click on the applicable bookmark to select the Service Bulletin.**

Purchased from www.WorkshopManuals.co.uk

www.WorkshopManuals.co.uk

# SERVICE BULLETIN

MITSUBISHI MOTORS

QUALITY INFORMATION ANALYSIS
OVERSEAS SERVICE DEPT. MITSUBISHI MOTORS CORPORATION

| SERVICE BULLETIN | No.: MSB-00E54-506 | | |
|---|---|---|---|
| | Date: 2000-11-30 | <Model> | <M/Y> |
| Subject: CORRECTION OF ERRORS IN ILLUSTRATION FOR HEADLAMP AIMING ADJUSTMENT | | (EC)PADERO/ MONTERO(V60,70) | 01-10 |
| Group: CHASSIS ELECTRICAL | Draft No.: 00sy051817 | | |
| CORRECTION | INTERNATIONAL CAR ADMINISTRATION OFFICE | T.NITTA - PROJECT LEADER<br>AFTER SALES SERVICE & CS PROMOTION | |

**1. Description:**

This Service Bulletin informs you that correction has been made of errors in the illustration for headlamp aiming adjustment.

**2. Applicable Manuals:**

| Manual | Pub. No. | Language | Page(s) |
|---|---|---|---|
| 2001 PAJERO Workshop Manual VOL.2 | PWJE0001 (2/2) | (English) | 54A-38 |
| 2001 MONTERO Workshop Manual VOL.2 | PWJS0002 (2/2) | (Spanish) | |

Purchased from www.WorkshopManuals.co.uk

www.WorkshopManuals.co.uk

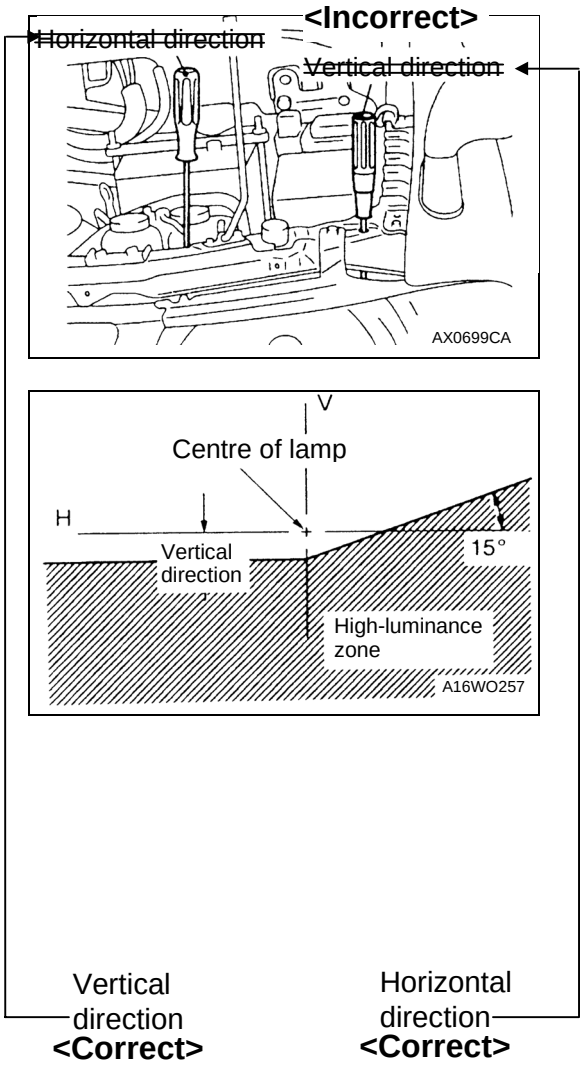


3. Turn the adjusting screws to adjust so that the deviation in the centre of the high-luminance zone (main optical axis) is at the standard value

**Standard value:**

| | |
|---|---|
| Vertical direction | 0.57° (10 mm) sown from horizontal line H |
| Horizontal direction | Position where 15° rising portion intersects vertical line V |

**Caution**

**(1) For the headlamp which is not being measured, disconnect that headlamp's connector if possible so that it does not illuminate while carrying out the adjustment. Furthermore, make sure that the light axis does not get shifted when re-connecting the connector.**

**(2) The headlamp have outer lenses which are made of plastic, so if covering the lens surface with the headlamp should not be turned on for any more than 3 minutes. In addition, do not mask the outer lens surface by attaching tape or similar.**

**(3) The adjustment should always be completed by turning the adjustment screws in the tightening direction.**

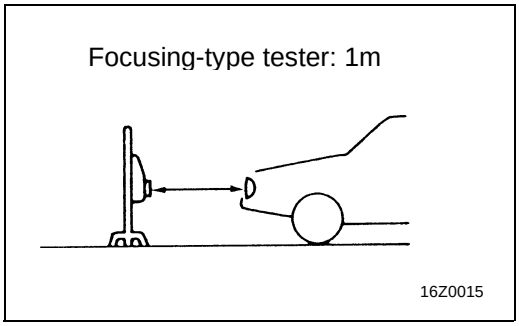


**LUMINANCE MEASUREMENT**

1. Place the tester receiver so that it is directly opposite the headlamp at the distance shown in the illustration.
2. Run the engine at a speed of 2000 r/min to fully charge the battery.
3. Align with the centre of the lamp.
   NOTE
   Check that the light/dark separation line on the adjustment screen and the low-beam cut-off line are aligned at this time
4. With the headlamps set to low beam, check that the luminance satisfies the limit value.

   **Limit: 6,400 cd or higher for each lamp**


Purchased from www.WorkshopManuals.co.uk

www.WorkshopManuals.co.uk


# CHASSIS ELECTRICAL

## CONTENTS

**GENERAL** . . . . . **2**
Outline of Changes . . . . . 2
General Information . . . . . 2
Construction Diagram . . . . . 3
**IMMOBILIZER SYSTEM** . . . . . **5**
**COMBINATION METER** . . . . . **5**
Troubleshooting . . . . . 5
**RV METER** . . . . . **6**
Troubleshooting . . . . . 6
RV meter . . . . . 23
**GLASS ANTENNA** . . . . . **24**
Antenna feeder cable . . . . . 24

Purchased from www.WorkshopManuals.co.uk

www.WorkshopManuals.co.uk

# GENERAL

## OUTLINE OF CHANGES

- Since the immobilizer-ECU location has been moved from the ignition key cylinder to near the diagnosis connector, the removal and installation procedure has been changed.
- The troubleshooting for speedometer has been changed to the method employing simulated vehicle speed signal input check with the MUT-II.
- Due to the adoption of an RV meter, the service adjustment procedure has been added.
- Due to the adoption of a glass antenna on the left of a quarter window glass, the removal and installation procedure of feeder cables has been added.

The service adjustment procedures which are not described here are the same as before.

## GENERAL INFORMATION

The RV meter, which displays various vehicle information has been used for some models.
By operating each function switch, including ”ADJ” and ”DISP” switches, driving information screen, A/C information screen, environment information screen, clock information screen, and audio screen can be called up.

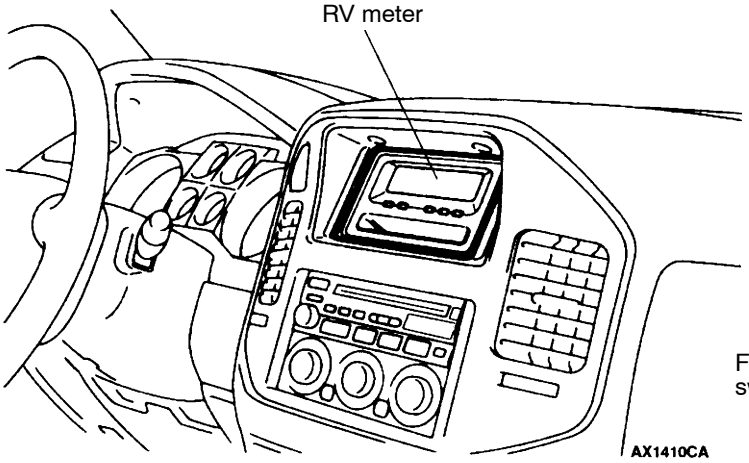


**RV meter**

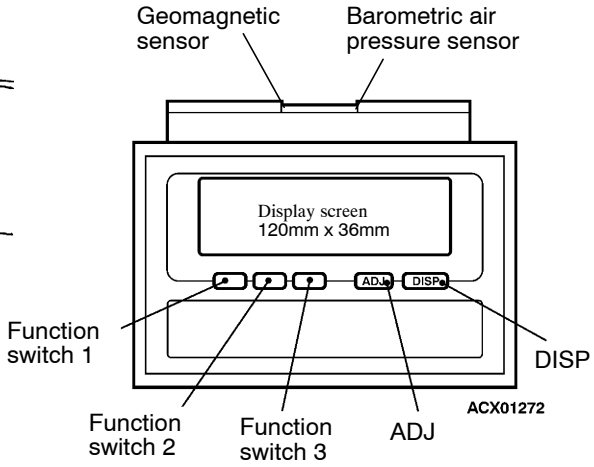


**DRIVING INFORMATION**

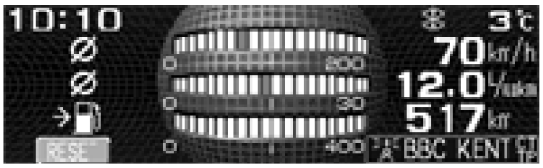


The driving information screen displays the average vehicle speed, average fuel efficiency, and possible travel distance based on the information derived from the engine-ECU and the fuel gauge unit.

**A/C INFORMATION**

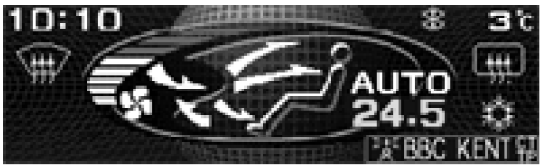


The screen displays set temperature, fan air mass, rear defogger operation, compressor operation, front defroster operation, and inside and outside air mode.

Purchased from www.WorkshopManuals.co.uk

www.WorkshopManuals.co.uk

**ENVIRONMENT INFORMATION**

100250A

The environment information screen displays ambient temperature, direction, altitude, and barometric air pressure. If the ambient temperature is 3°C or lower when starting the vehicle, a frozen marking blinks and an alarm sound warns a driver.

**CLOCK INFORMATION**

100260A

Digitally displayed clock and date are featured. When the function switch 3 on the clock display screen is pressed for 3 seconds or longer, the time adjustment screen can be called up.

**AUDIO INFORMATION**

100240A

The audio function and setting of radio, tape, and CD are displayed.

## CONSTRUCTION DIAGRAM

**This system:**

1. receives A/C information, such as ambient temperature sensor from the A/C-ECU and audio information from the audio system through M-BUS.
2. receives information regarding buzzer sound and ignition switch position recognition from the RV meter through SWS communication.
3. receives the vehicle speed data from the engine-ECU to calculate the average vehicle speed. Moreover, this system receives the fuel injection amount data to calculate the average fuel efficiency and possible travel distance.
4. calculates the direction of a vehicle by using the geomagnetic sensor.
5 calculates the outside air temperature by using the ambient temperature sensor.
6. measures the ambient pressure by using the barometric air pressure sensor to calculate the altitude based on the information.
7. obtains information on remaining fuel amount required for calculating the possible travel distance by using the fuel gauge unit.

Purchased from www.WorkshopManuals.co.uk

www.WorkshopManuals.co.uk

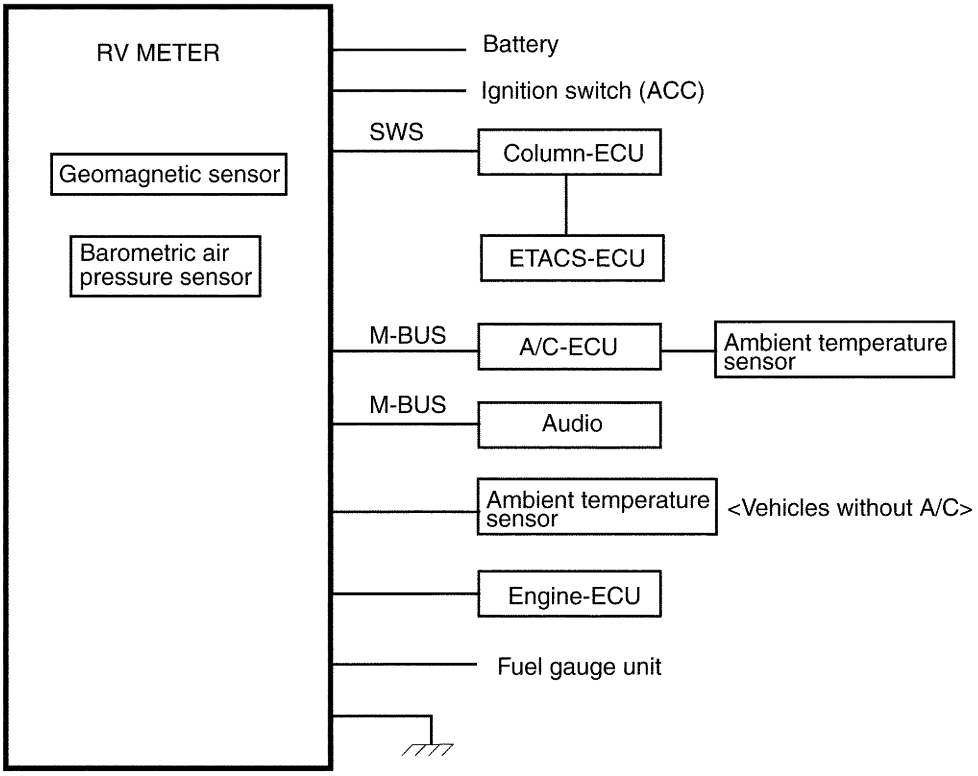


10014CA

Purchased from www.WorkshopManuals.co.uk

www.WorkshopManuals.co.uk

# IMMOBILIZER SYSTEM

## REMOVAL AND INSTALLATION

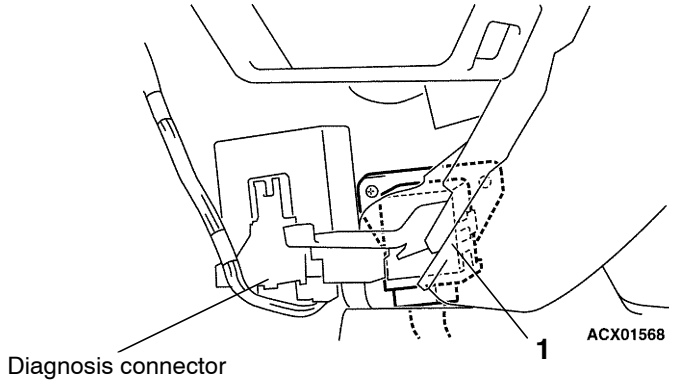


**Immobilizer-ECU removal steps**

- Lower center panel <LH> panel
  (Refer to GROUP 52A - Floor console assembly)

1. Immobilizer-ECU

NOTE
On vehicles with the 4D5 engine, the ignition key registration procedure is the same as for the 4M41 engine.

# COMBINATION METER

## TROUBLESHOOTING

### INSPECTION PROCEDURES FOR TROUBLE SYMPTOM

| Speedometer inoperative (other meters are operated) | Probable cause |
|---|---|
| Failure may occur on vehicle speed sensor, harnesses, connectors, meter assembly. | • Malfunction of vehicle speed sensor<br>• Malfunction of vehicle harness or connector<br>• Malfunction of combination meter |

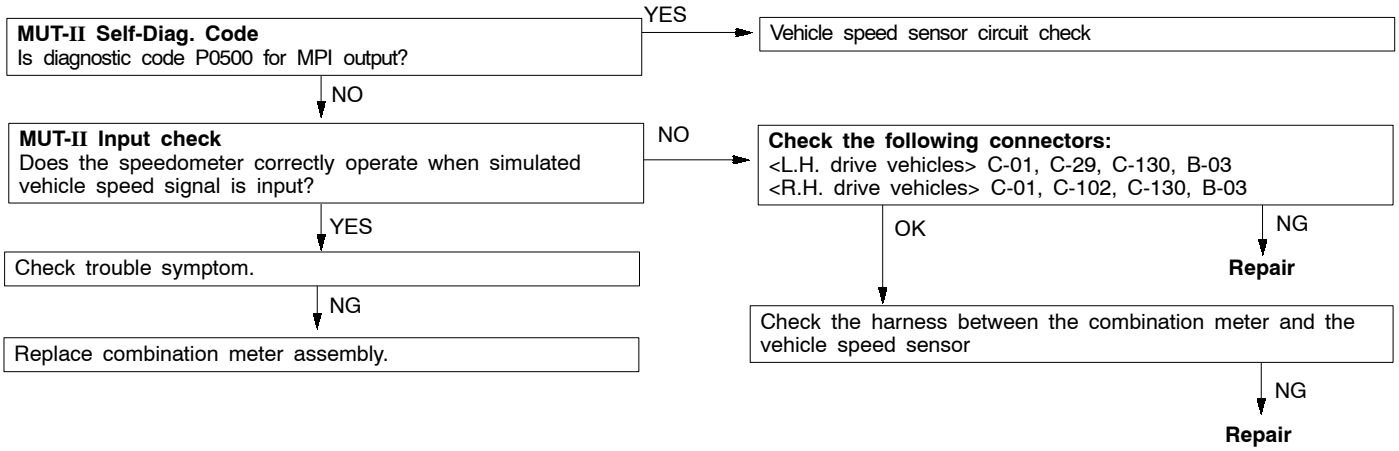


NOTE
When vehicle speed signal is checked with MUT-II in the ETACS-ECU input signal test, drive the vehicle with MUT-II connected to diagnostic connector. When the buzzer sounds, this test is evaluated OK.

Purchased from www.WorkshopManuals.co.uk

www.WorkshopManuals.co.uk

# RV METER

## TROUBLESHOOTING

### PRECAUTIONS WITH REGARD TO RV METER SERVICE WORK

#### PROBLEM DIAGNOSIS POINTS RELATING TO THE OVERALL SYSTEM

1. Check the connections of all related harness connectors. If any problems are found, repair the problem location and then re-check the trouble symptoms.
2. If there are no problems with the harness connections, check the harnesses. If there are no problems with the harnesses, replace the related unit. Make a note of the service function data at this time.

   NOTE
   If the cause of the problem is thought to be related to system communication, carry out troubleshooting.

#### PROBLEM DIAGNOSIS POINTS FOR TROUBLE WITH SPECIAL FUNCTIONS ONLY

1. Check the connections of the harnesses connectors which are related to the special function. If any problems are found, repair the problem location and then re-check the trouble symptoms.
2. If there are no problems with the connector connections, check the harnesses. If there are no problems with the harnesses, replace the unit which controls that function.

### RV METER UNIT OPERATING PANEL

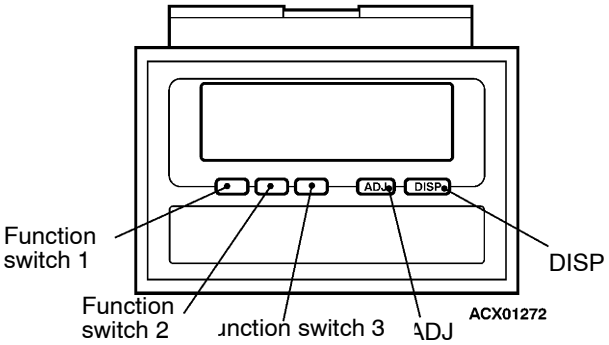


### TROUBLE DIAGNOSIS SERVICE FUNCTIONS

The RV meter is equipped with the following trouble diagnosis service functions.

| Service function | | Contents | Reference Page |
|---|---|---|---|
| Automatic mode diagnosis | | checks vehicle signal information communication, audio, A/C, fuel information, monitor automatically whenever function switch 1 (NEXT) is pressed. | 54A-7 |
| Diagnosis mode | | checks version, vehicle signal, communication information (audio, A/C, and fuel). | 54A-9 |
| History mode | | displays history of communication error. | 54A-11 |
| Monitor check mode | Display check mode | checks the display. | 54A-11 |
| | Geomagnetic check mode | checks the geomagnetic sensor. | 54A-12 |
| | Altimeter adjust mode | adjusts the altimeter. | 54A-13 |

Purchased from www.WorkshopManuals.co.uk

www.WorkshopManuals.co.uk

1st menu of the service mode

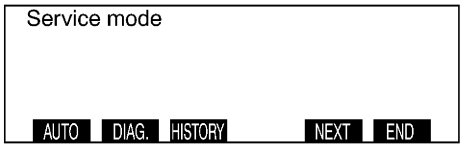


ACX01984

2nd menu of the service mode

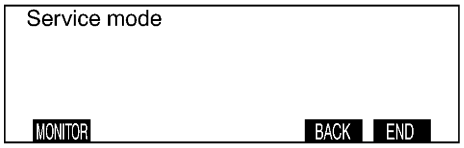


ACX01985

## SERVICE FUNCTION STARTING

1. Turn the ignition switch to the ”LOCK” (OFF) position, and then while pressing and holding the ”ADJ” switch, turn the ignition switch to the ”ACC” position.
   After the adjustment switch has been pressed continuously for 5 seconds or longer, the reception signal sound (beep) will sound, and at the same time the service function will start up and the first menu of the service mode screen will be displayed.

2. When ADJ switch (NEXT) is pressed at the 1st menu of the oservice mode screen, the mode is switched to the 2nd menuf the service mode screen.
   When function switch 1 (MONITOR) is pressed at the current screen, the screen mode is switched to monitor check mode.(Refer to P.54A-11.)

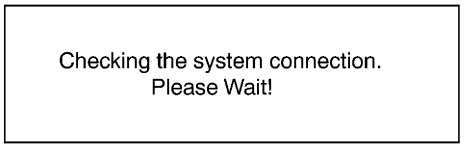


ACX01986

## AUTOMATIC MODE

1. When function switch 1 (AUTO) is pressed at the 1st menu of the service mode screen, the mode is switched to automatic checking mode.
   At this time, a display will appear to prompt you to turn the ignition switch to the ON position.
2. When the ignition switch is turned to the ON position, communication and wiring check is carried out.

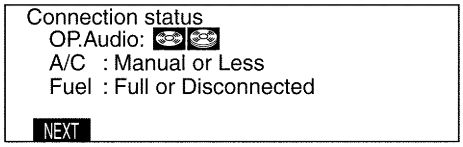


10004CA

3. When the communication check is completed, the communication and wiring check results are displayed on the screen.
   If the audio system is recognized, the applicable icon is displayed.
   Air conditioner input (Automatic, Manual or without air conditioning) is displayed.
   Fuel gauge input (OK, not connected or fuel tank full) is displayed.

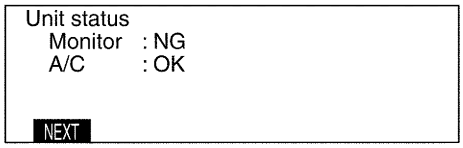


10018CA

4. When function switch 1 (NEXT) is pressed at the previous screen, the status of unit is displayed.

| Item | Display example |
|---|---|
| Monitor | NG |
| Air conditioner | OK |

Purchased from www.WorkshopManuals.co.uk

www.WorkshopManuals.co.uk

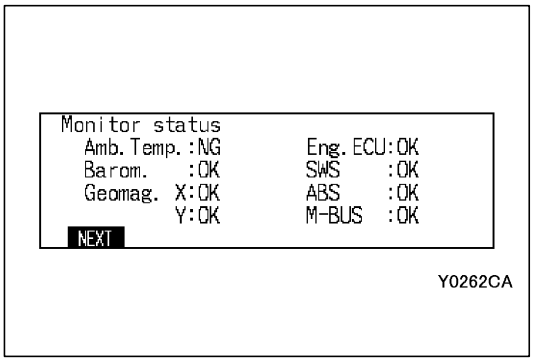


5. When function switch 1 (NEXT) is pressed at the previous screen, a list of monitor check items and results is displayed.

| Item | Display example | Contents or conditions |
|---|---|---|
| Ambient temperature | OK | – |
| Barometric pressure | OK | – |
| Geomagnetic sensor X direction, Y direction | OK | – |
| Engine-ECU, SWS, M-BUS | E1 | Communication error |
| | E2 | Open circuit or not connected |

NOTE

For diesel vehicles, E2 is normally displayed for Engine-ECU. (meaning that it is not connected)

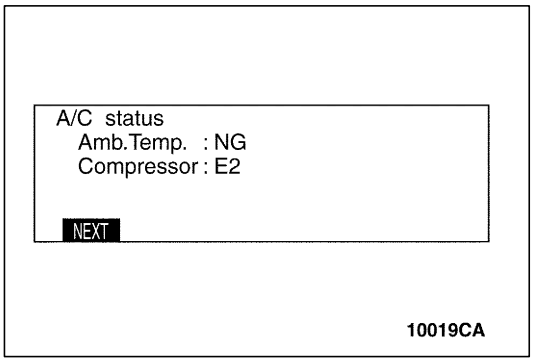


6 . When function switch 1 (NEXT) is pressed at the previous screen, A/C related item list is displayed.
For vehicles without air conditioner or with a manual air conditioner, the version is not displayed.

| Item | Display example |
|---|---|
| Ambient temperature sensor | NG |
| Compressor | OK |

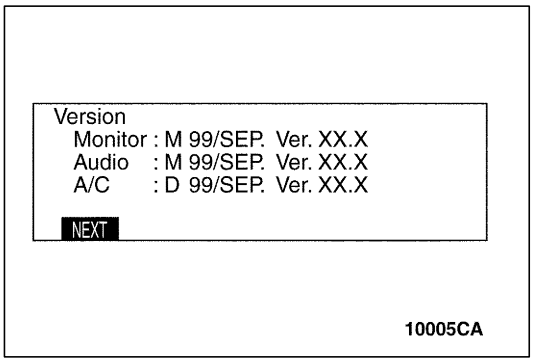


7. When function switch 1 (NEXT) is pressed at the previous screen, the version of monitor, audio and air conditioner is displayed.
For vehicles without air conditioner or with a manual air conditioner, the version is not displayed.

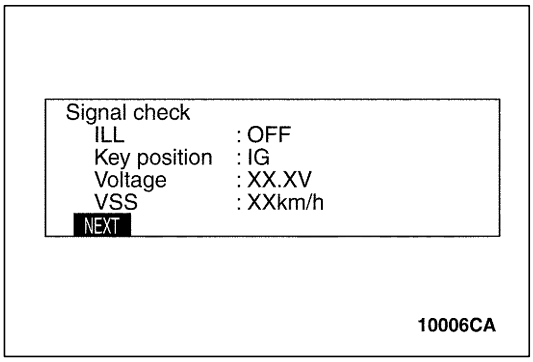


8. When function switch 1 (NEXT) is pressed at the previous screen, the status of vehicle signal is displayed.

| Item | Display example | Contents or conditions |
|---|---|---|
| Illumination | OFF | Conditions of illumination |
| Ignition key position | IG | Ignition switch position |
| Voltage | 12V | Power supply voltage |

Purchased from www.WorkshopManuals.co.uk

www.WorkshopManuals.co.uk

| Item | Display example | Contents or conditions |
|---|---|---|
| VSS | XX km/h | Speed on basis of vehicle speed pulse |

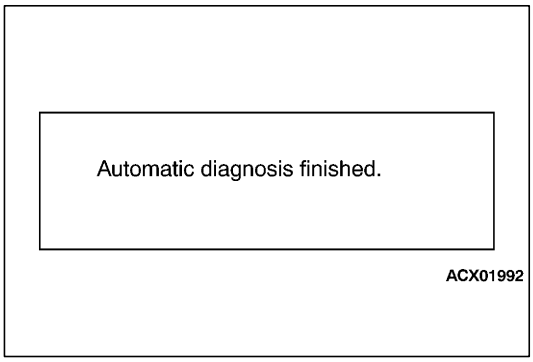


9. When function switch 1 (NEXT) is pressed at the previous screen, the displaying the message ”Automatic diagnosis finished.”

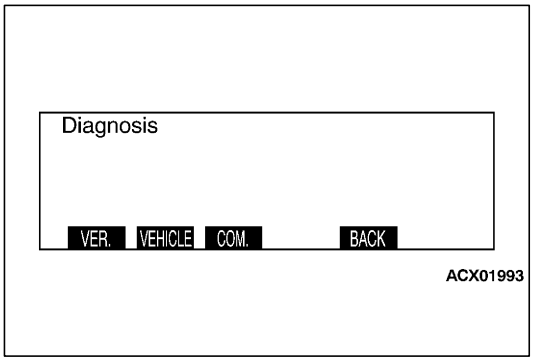


**DIAGNOSIS MODE**

1. From the 1st menu of the service mode screen, press function switch 2 (DIAG) to display diagnosis mode.
2. The following displays appear when the various function switches are pressed.

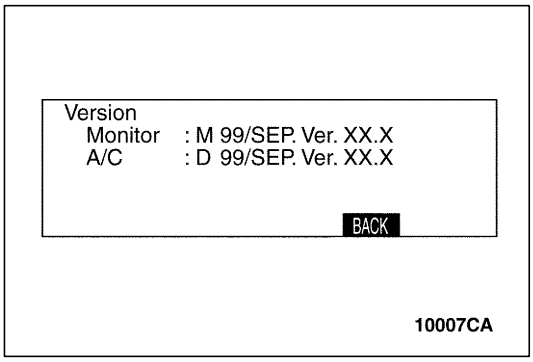


(1) When function switch 1 (VER) is pressed, the version of monitor and air conditioner is displayed.

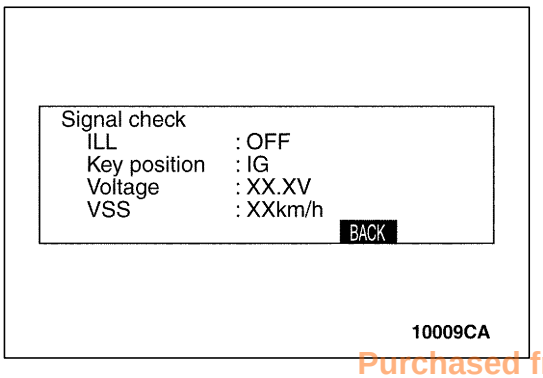


(2) When function switch 2 (VEHICLE) is pressed, the vehicle signal condition is displayed.

Purchased from www.WorkshopManuals.co.uk

www.WorkshopManuals.co.uk

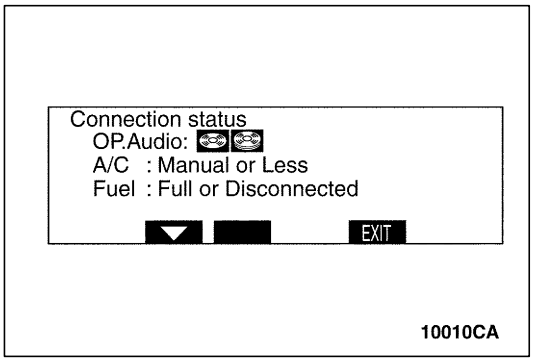


(3) When function switch 3 (COM) is pressed, the results are displayed after communication and wiring check is carried out.
If the audio system is recognized, the icon is displayed.
Air conditioner input (Automatic, Manual or without air conditioning) is displayed.
Fuel gauge input (OK, not connected or fuel tank full) is displayed.

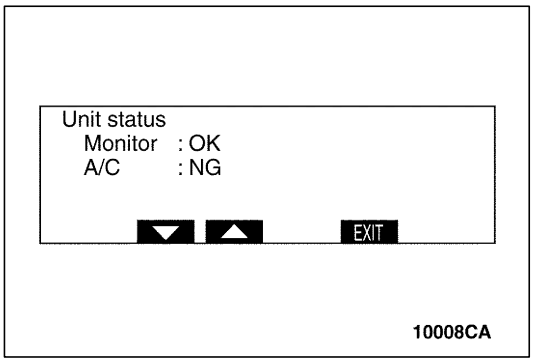


- When function switch 1 ( ▼ ) at the previous screen, the status of unit is displayed.

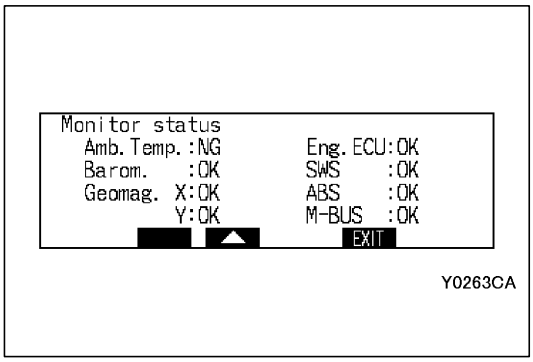


- When function switch 1 ( ▼ ) at the previous screen, the status of monitor is displayed.

| Item | Display example | Contents or conditions |
|---|---|---|
| Ambient temperature | OK | – |
| Barometric pressure | OK | – |
| Geomagnetic sensor X direction, Y direction | OK | – |
| Engine-ECU, SWS, M-BUS | E1 | Communication error |
| | E2 | Open circuit or not connected |

NOTE

For diesel vehicles, E2 is normally displayed for Engine-ECU. (meaning that it is not connected)

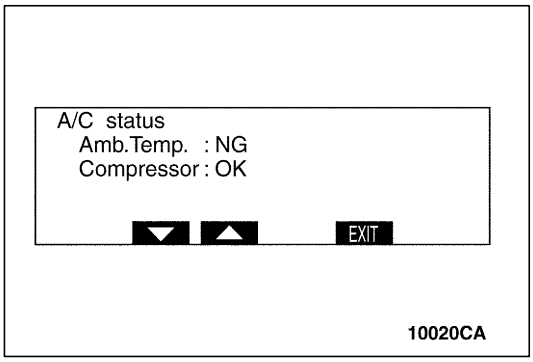


- When function switch 1 ( ▼) at the previous screen, the status of monitor is displayed. A/C related item list is displayed.
For vehicles without air conditioner or with a manual air conditioner, the version is not displayed.

| Item | Display example |
|---|---|
| Ambient temperature sensor | NG |
| Compressor | OK |

Purchased from www.WorkshopManuals.co.uk

www.WorkshopManuals.co.uk

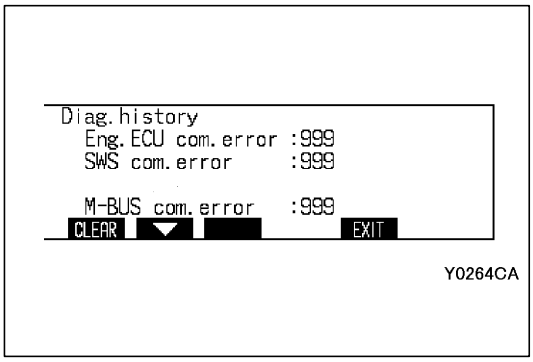


## HISTORY MODE

(1) When function switch 3 (HISTORY) is pressed at the 1st menu of the service mode screen, the mode is switched to history mode.

| Item | Display example | CONTENTS |
|---|---|---|
| Engine-ECU, SWS, M-BUS | 000 | No. of communication errors |

- When function switch 1 (CLEAR) is pressed, the number of errors is erased.

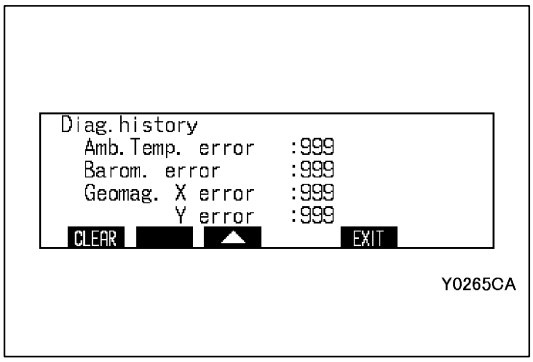


(2) When the function switch 2 ( ▼ ) is pressed, the mode is switched to the 2nd menu of history mode.

| Item | Display example | CONTENTS |
|---|---|---|
| Amb.Temp, Barom, Geomag X.Y | 000 | No. of communication errors |

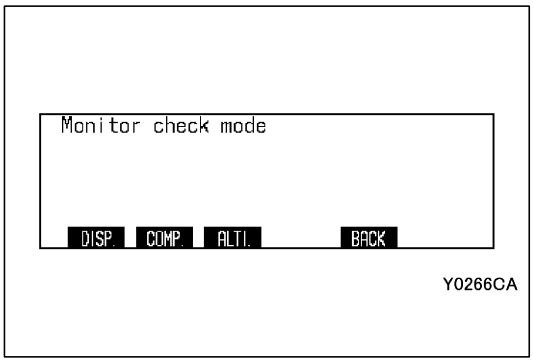


## MONITOR CHECK MODE

### Display check mode

1. When function switch 1 (MONITOR ) is pressed at the 2nd menu of the service mode screen, the mode is switched to monitor check mode.
   The following displays appear when the various function switches are pressed.

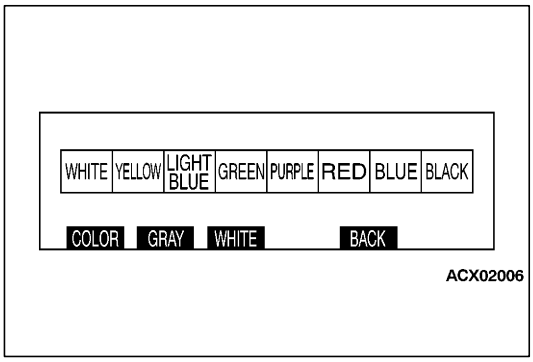


- When function switch 1 (DISP) is pressed, the color bar is displayed.

Purchased from www.WorkshopManuals.co.uk

www.WorkshopManuals.co.uk

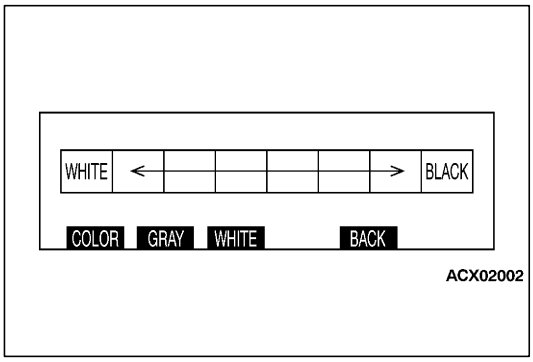


- When function switch 2 (GRAY) is pressed, the grey scale screen is displayed.

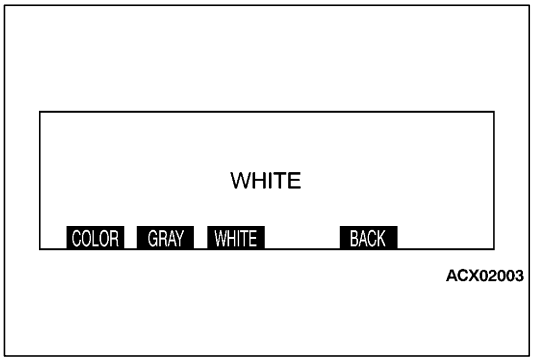


- When function switch 3 (WHITE) is pressed, the white screen is displayed.

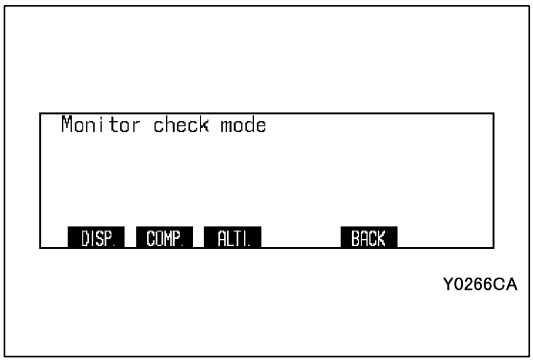


**Geomagnetic check mode**

1. When function switch 1 (MONITOR) is pressed at the 2nd menu of the service mode screen, the mode is switched to monitor check mode.
   The following displays appear when the various function switches are pressed.

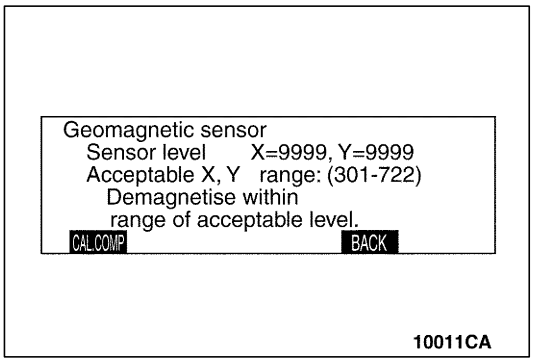


2. When function switch 2 (COMP) is pressed at the previous screen, the mode is switched to geomagnetic sensor mode.
   - At geomagnetic sensor mode, outputs in X- and Y-axes of the geomagnetic sensor, the circular bearing coordinate, and the radius are displayed.
     If both values of the sensor (X, Y) are outside the range between 450 and 580, there is a high possibility of geomagnetisation and the screen displays a message of degeomagnetisation request.
     For degeomagnetisation, refer to P.54A-15.

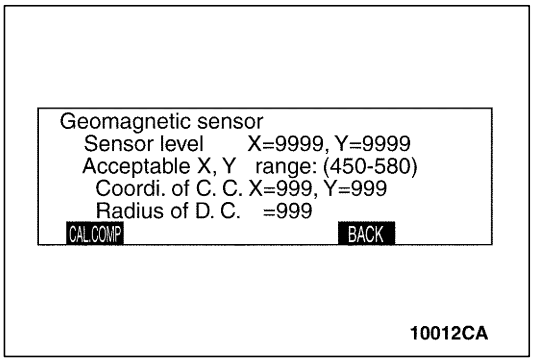


- If both values of the sensor (X, Y) are input within the range between 450 and 580 for one second or longer continuously, the axes are displayed.

Purchased from www.WorkshopManuals.co.uk

www.WorkshopManuals.co.uk

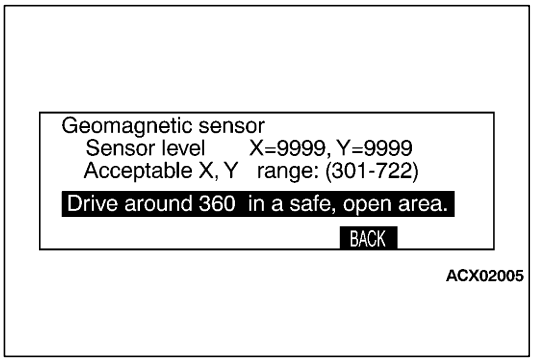


- When function switch 1 (CAL.COMP) is pressed at the previous screen, a message of rotation compensation is displayed.
  For the method of magnetization compensation by rotation, refer to P.54A-14.

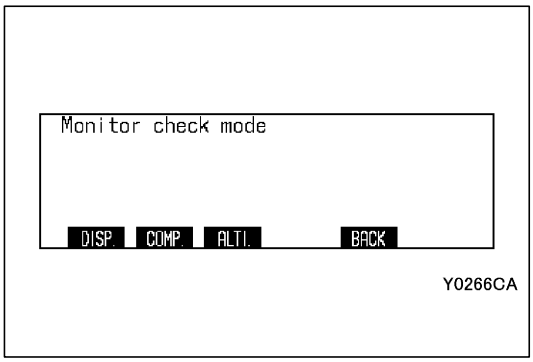


**Altimeter adjust mode**

When function switch 3 (ALTI) is pressed at the monitor check mode.
The following displays appear when the various function switches are pressed.

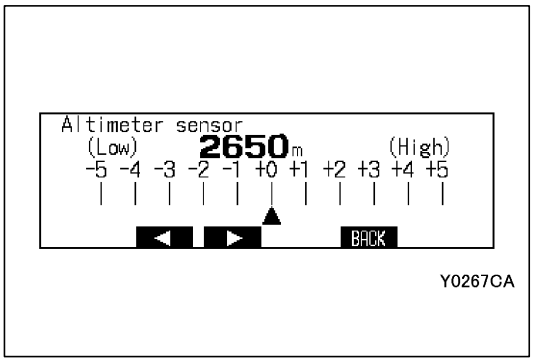


The altitude can be corrected as follows using the function keys.

- When function switch 2 ( ◀ ) is pressed, the altitude is corrected downwards, and after approximately 5 seconds, the calibration results are displayed in the altitude calibration column.
- When function switch 3 ( ▶ ) is pressed, the altitude is corrected upwards, and after approximately 5 seconds, the calibration results are displayed in the altitude calibration column.
- When ”ADJ” switch (BACK) is pressed, the mode is switched to monitor check mode screen.

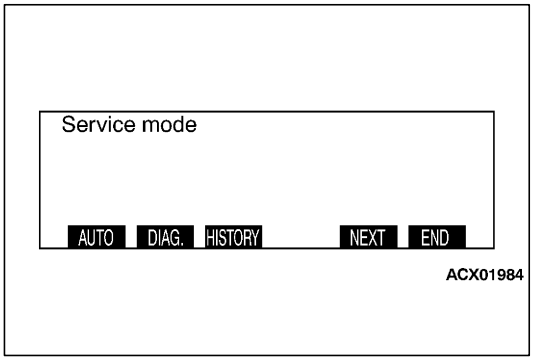


**CANCELLING SERVICE MODE**

At the 1st menu of the service mode screen, press ”DISP” switch (END) , or turn the ignition switch to the ”LOCK” (OFF) position to cancel service mode.

Purchased from www.WorkshopManuals.co.uk

www.workshopmanuals.co.uk

## MANUAL GEOMAGNETISATION CALIBRATION

The RV meter automatically conducts geomagnetisation calibration by sampling direction data while the vehicle is normally driving. The calibration can be done manually at any time.

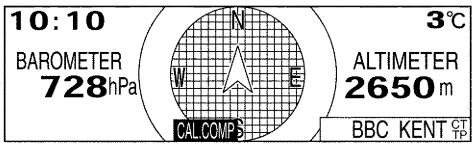

10015CA

1. Press function switch 3 for three seconds or more during the environment information screen to call up the screen as shown in the illustration .

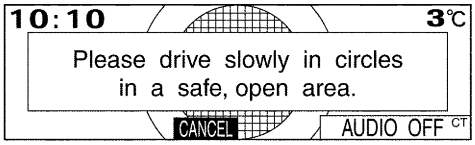

10016CA

2. When function switch 3 (CAL.COMP) is pressed, a message of urging geomagnetisation calibration is displayed.

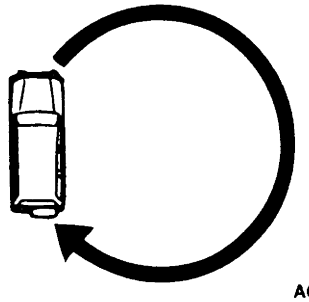
AC001243AB

3. Drive around the vehicle.

   NOTE
   When driving around the vehicle to correct the sensor, select a safe and open area where there are no structures exist such as the high-tension line and the iron bridge that affect the geomagnetic sensor in circumference.

Purchased from www.WorkshopManuals.co.uk

www.WorkshopManuals.co.uk

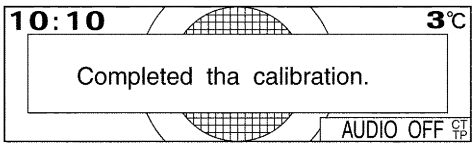

10017CA

4. A message of completing geomagnetisation calibration is displayed.

NOTE
If the following switches are pressed before completion of calibration, the system cancels calibration and use the previously corrected data.
- When pressing ”DISP” and ”ADJ” switches
- When pressing function switch 3 switch (CANCEL)
- When operating auto A/C and audio
- When turning the ignition switch to the “OFF” (LOCK)position

Example: Commercial demagnetiser

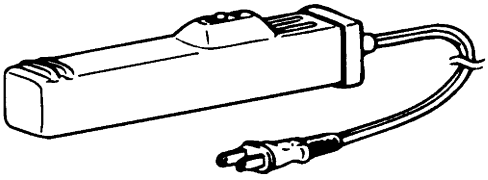
AC001246AB

**Degeomagnetisation and calibration method**

1. Demagnetise the body using a commercial demagnetiser.

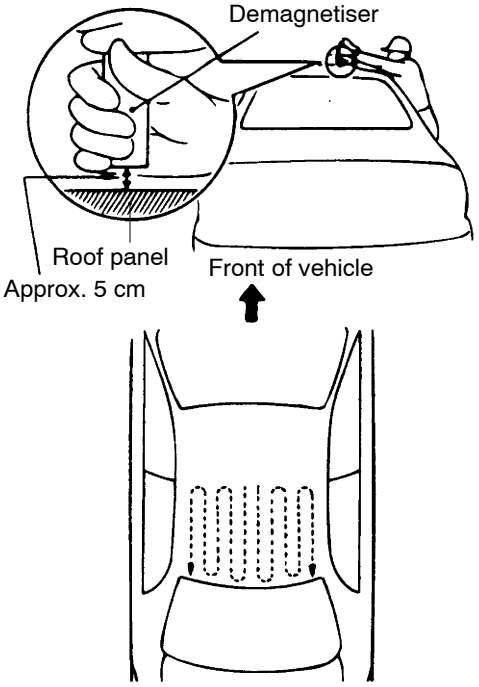

AC001247

2. While keeping the distance between the tip of demagnetiser and the roof panel to approx. 5 cm, move the demagnetiser slowly with a sweeping manner on the rear-half surface of roof panel.

   **Caution**
   **If the tip of demagnetiser touches the roof panel, the magnetising condition of body becomes worse to the contrary. Absolutely avoid this.**

3. Slowly draw the demagnetiser apart from the body. Turn OFF the switch of demagnetiser when it is apart from the body more than 50 cm.

   **Caution**
   **If the demagnetiser is turned OFF near the body or it is suddenly moved away from the body, the magnetising condition of body becomes worse to the contrary. Absolutely avoid these.**

4. After degeomagnetisation, geomagnetisation calibration is carried out (Refer to P.54A-14.)

Purchased from www.WorkshopManuals.co.uk

www.WorkshopManuals.co.uk

## RV METER TERMINAL VOLTAGES

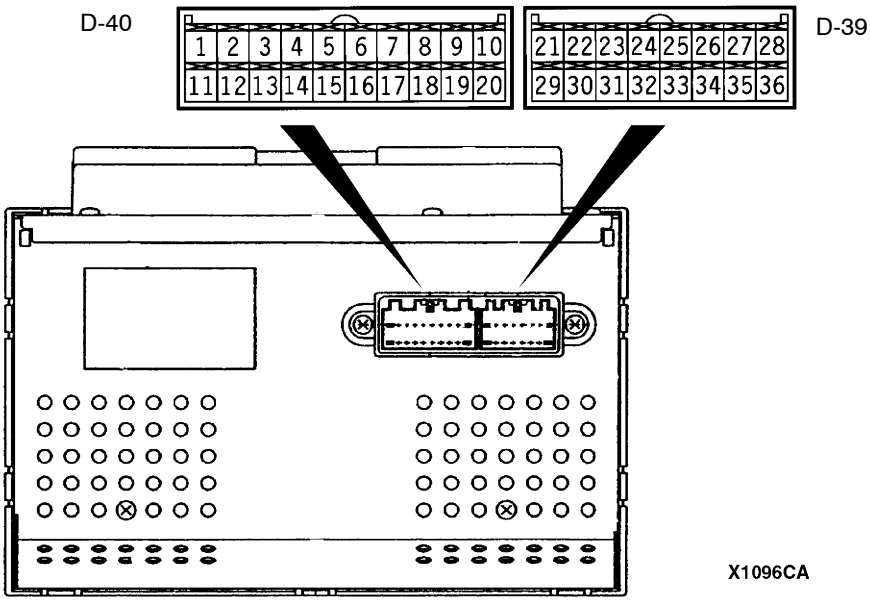


| Terminal No. | Input/output | Signal symbol | Terminal voltage (V) | Harness problem | | Trouble symptoms when there is a harness problem |
|---|---|---|---|---|---|---|
| | | | | Open circuit | short-circuit | |
| 4 - 1 | – | – | – | – | – | – |
| 5 | Input | ISOK (MUT-II data signal) | Hi:System voltage<br>Lo:0 - 1 | Exists | Exists | Communication between the MUT-II and the engine-ECU <Diesel vehicles> or engine-A/T-ECU <petrol vehicles> is not possible. |
| 6 | Input/output | DATA (ETACS SWS data signal) | Hi:System voltage<br>Lo:0 - 1 | Exists | Exists | ● Switch operating sound (buzzer) does not sound.<br>● Daytime/nighttime mode does not change in conjunction with the tail gate lamps.<br>● Indicators (buttons, illumination panel) do not illuminate. |
| 7 | Input/output | M-DATA(AUDIO) (M-BUS data signal) | Hi:4 - 5<br>Lo:0 - 1 | Exists | Exists | ● Audio information does not appear on the screen. |
| 8 | Input/output | M-CLOCK(AUDIO) M-BUS (C lock signal) | Hi:4 - 5<br>Lo:0 - 1 | Exists | Exists | ● Audio information does not appear on the screen. |
| 9 | Input/output | M-DATA(A/C) (M-BUS data signal) | Hi:4 - 5<br>Lo:0 - 1 | Exists | Exists | ● Air conditioner information does not appear on the screen.<br>● Ambient temperature is not displayed. |
| 10 | Input/output | M-CLOCK(A/C) M-BUS (C lock signal) | Hi:4 - 5<br>Lo:0 - 1 | Exists | Exists | ● Air conditioner information does not appear on the screen.<br>● Ambient temperature is not displayed. |

Purchased from www.WorkshopManuals.co.uk

www.WorkshopManuals.co.uk

| Terminal No. | Input/output | Signal symbol | Terminal voltage (V) | Harness problem | | Trouble symptoms when there is a harness problem |
|---|---|---|---|---|---|---|
| | | | | Open circuit | short-circuit | |
| 11 - 14 | – | – | – | – | – | – |
| 15 | Input/output | K (engine K-LINE signal) | Hi: System voltage<br>Lo:0 - 1 | Exists | Exists | ● Wiring communication error<br>● Communication between the engine-A/T-ECU <Petrol vehicles> is not possible.<br>● Abnormal driving information numerical display |
| 16 | – | – | – | – | – | – |
| 17 | Input/output | M-BUSY (AUDIO) | Hi:System voltage<br>Lo:0 - 1 | Exists | Exists | ● Audio information does not appear on the screen. |
| 18 | – | SHIELD-EARTH (AUDIO) | – | – | – | – |
| 19 | Input/output | M-BUSY (A/C) | Hi:System voltage<br>Lo:0 - 1 | Exists | Exists | ● Air conditioner information does not appear on the screen.<br>● Ambient temperature is not displayed. |
| 20 | – | SHIELD-EARTH | – | – | – | – |
| 22 - 21 | – | – | – | – | – | – |
| 23 | Input | Ambient temperature sensor | – | Exists | Exists | ●Ambient temperature is not displayed. |
| 24 | Input | ILL + (Lighting switch) | Hi:System voltage<br>Lo:0 - 1 | Exists | Exists | Does not illuminate. |
| 25 | Input | ACC (ACC power supply) | System voltage | Exists | – | Screen does not appear. No operations are possible. |
| | | | | – | Exists | Blown multi-purpose fuse |
| 26 | Input | +B | System voltage | Exists | – | Screen does not appear. No operations are possible. |
| | | | | – | Exists | Blown multi-purpose fuse |
| 27 | Input | VSS (Vehicle speed pulse signal) | Hi:System voltage<br>Lo:0 - 1 | Exists | Exists | ● Abnormal “Distance km after replacement” display in maintenance screen<br>● Switches which are not supposed to operate during driving do operate. (Example:clock adjustment screen, maintenance settings, etc.)<br>● Ambient temperature display is abnormally high. |
| 28 | – | Earth | – | Exists | – | Screen does not appear. |

Purchased from www.WorkshopManuals.co.uk

www.WorkshopManuals.co.uk

| Terminal No. | Input/output | Signal symbol | Terminal voltage (V) | Harness problem | | Trouble symptoms when there is a harness problem |
|---|---|---|---|---|---|---|
| | | | | Open circuit | short-circuit | |
| 29 - 30 | – | – | – | – | – | – |
| 31 | – | EARTH (TEMP) | – | – | – | – |
| 32 | – | ILL - (illumination lamp adjustment signal) | – | Exists | Exists | Unable to adjust illumination lamp |
| 33 | Input | FUEL GAUGE | 0 - 3 | Exists | Exists | – |
| 34 - 36 | – | – | – | – | – | – |

## CHART CLASSIFIED BY TROUBLE SYMPTOMS

| Related unit | Trouble Symptom | Inspection procedure No. | Reference page |
|---|---|---|---|
| Malfunction of RV meter | No system operations can be carried out. | 1 | 54A-18 |
| | System voltage drop warning screen appears. | 2 | 54A-18 |
| | Ambient temperature does not display normally. | 3 | 54A-19 |
| | Compass does not display normally. | 4 | 54A-20 |
| | Altimeter does not display normally. | 5 | 54A-21 |
| | Air conditioner information does not display normally. | 6 | 54A-21 |
| | Audio information does not display normally. | 7 | 54A-22 |

## INSPECTION PROCEDURES FOR EACH TROUBLE SYMPTOM

### Inspection procedure 1

**No system operations can be carried out.**

**Check the following connectors:**
<L.H.drive vehicles> D-27, D-223, D-31, D-39
<R.H.drive vehicles> D-27, D-33, D-39

NG → **Repair**

OK ↓

Check the trouble symptoms.

NG → Replace the RV meter.

### Inspection procedure 2

**System voltage abnormality screen appears.**

Does the voltage abnormality screen appear immediately after the ignition switch is turned to the ACC position?

NO → End

YES ↓

Measure at RV meter connector D-39.
- Connector disconnected
- Voltage between terminal (25) and body earth

**OK:** System voltage

OK → Malfunction of RV meter voltage judgment circuit → Replace the RV meter.

NG ↓

Replace the battery.

Purchased from www.WorkshopManuals.co.uk

www.WorkshopManuals.co.uk

## Inspection procedure 3

**Ambient temperature does not display normally.**

**<Vehicles with automatic A/C>**

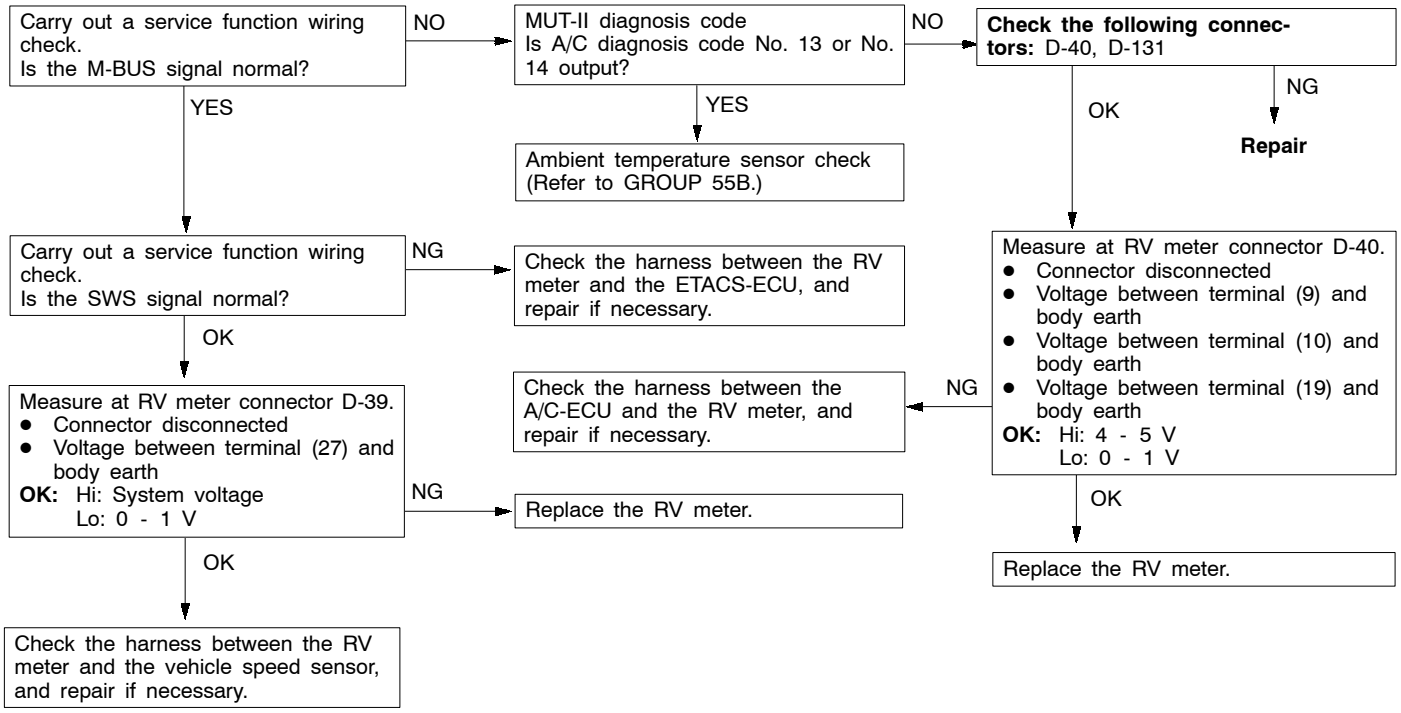


**<Vehicles without automatic A/C>**

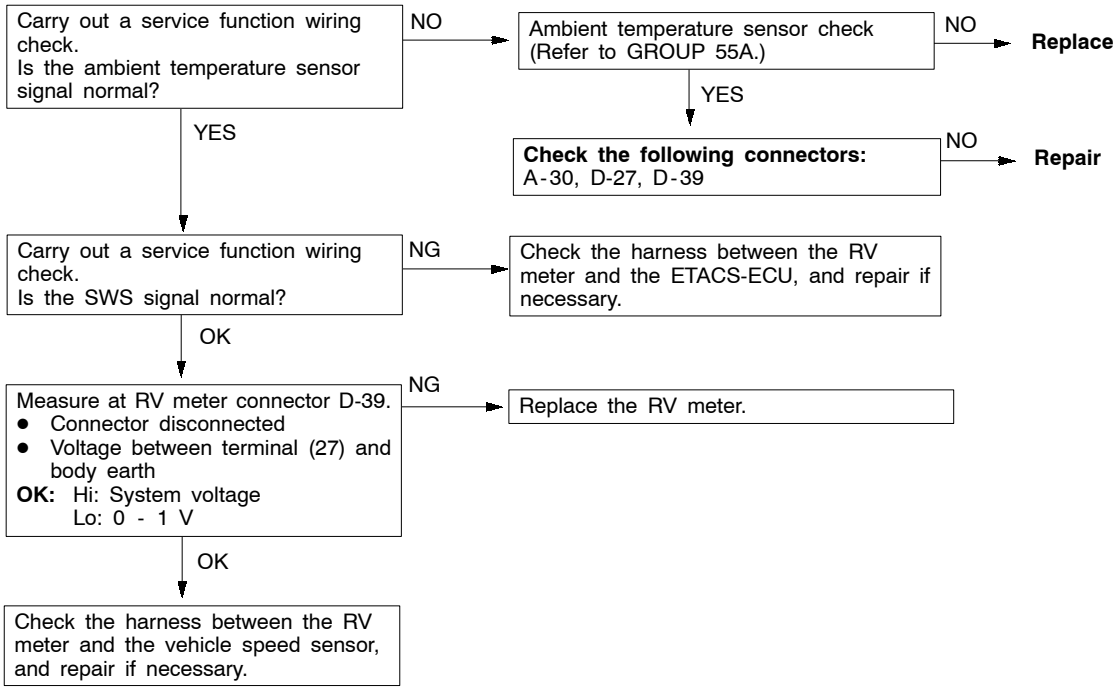


Purchased from www.WorkshopManuals.co.uk

www.WorkshopManuals.co.uk

## Inspection procedure 4

**Compass does not display normally.**

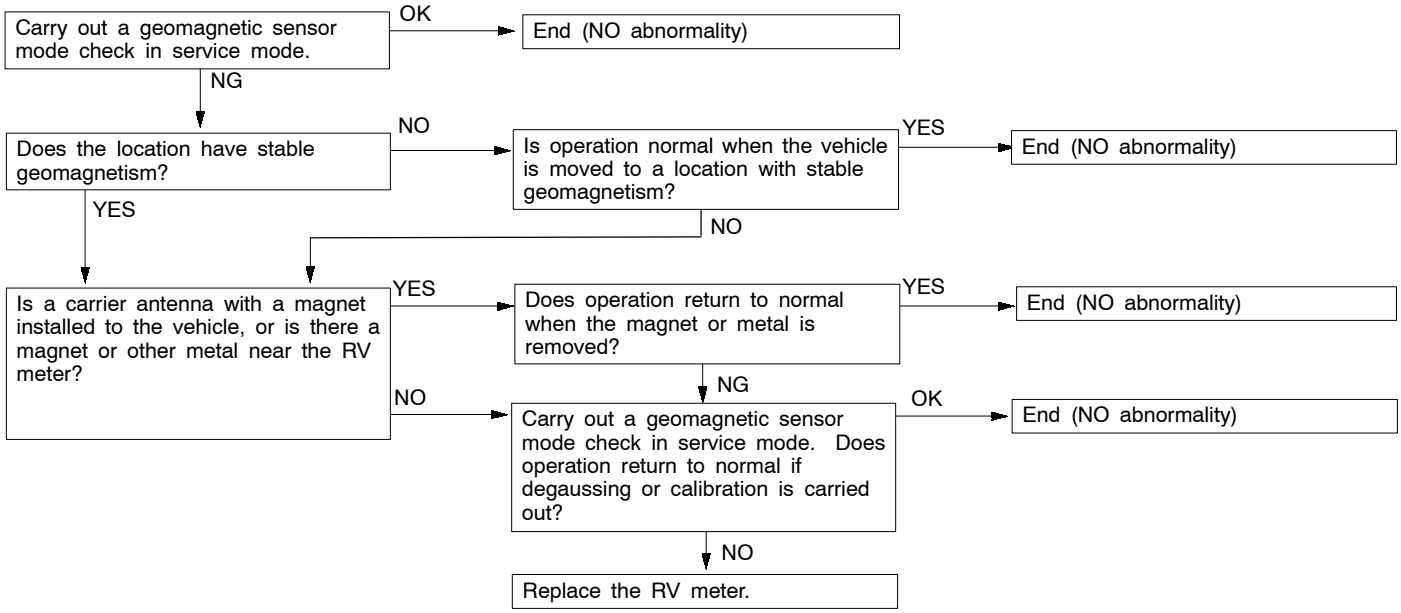


Purchased from www.WorkshopManuals.co.uk

www.WorkshopManuals.co.uk

## Inspection procedure 5

### Altimeter does not display normally.

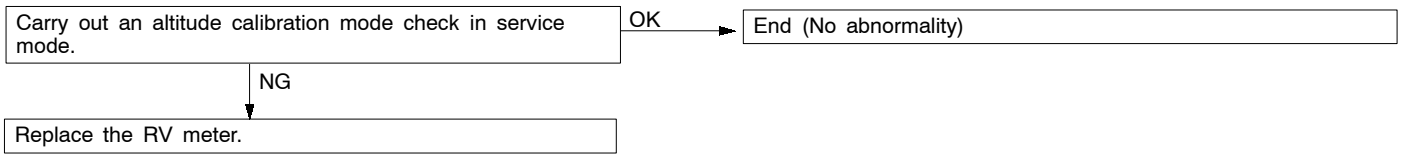


## Inspection procedure 6

### Air conditioner information does not display normally.

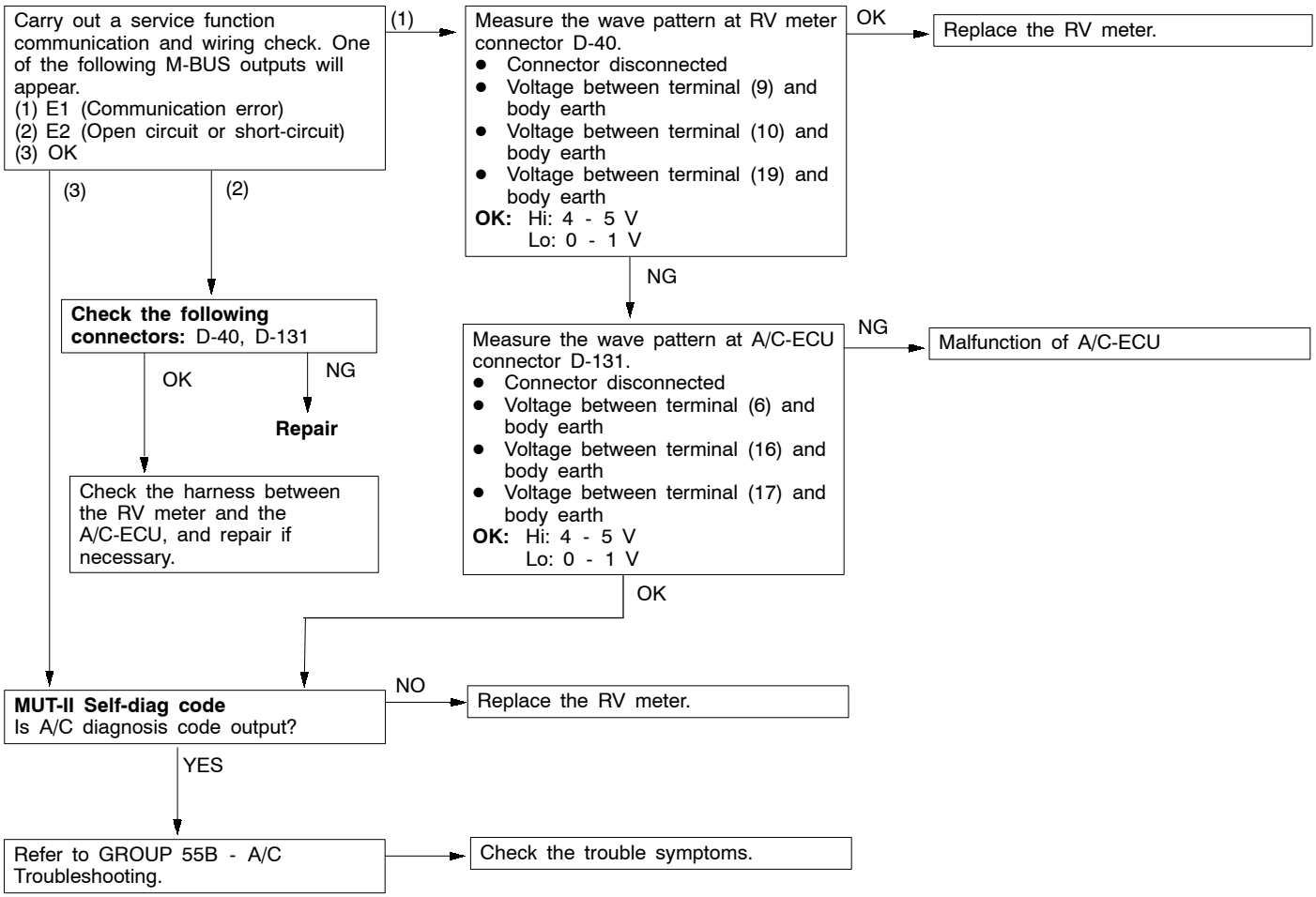


Purchased from www.WorkshopManuals.co.uk

www.WorkshopManuals.co.uk

## Inspection procedure 7

**Audio information does not display normally.**

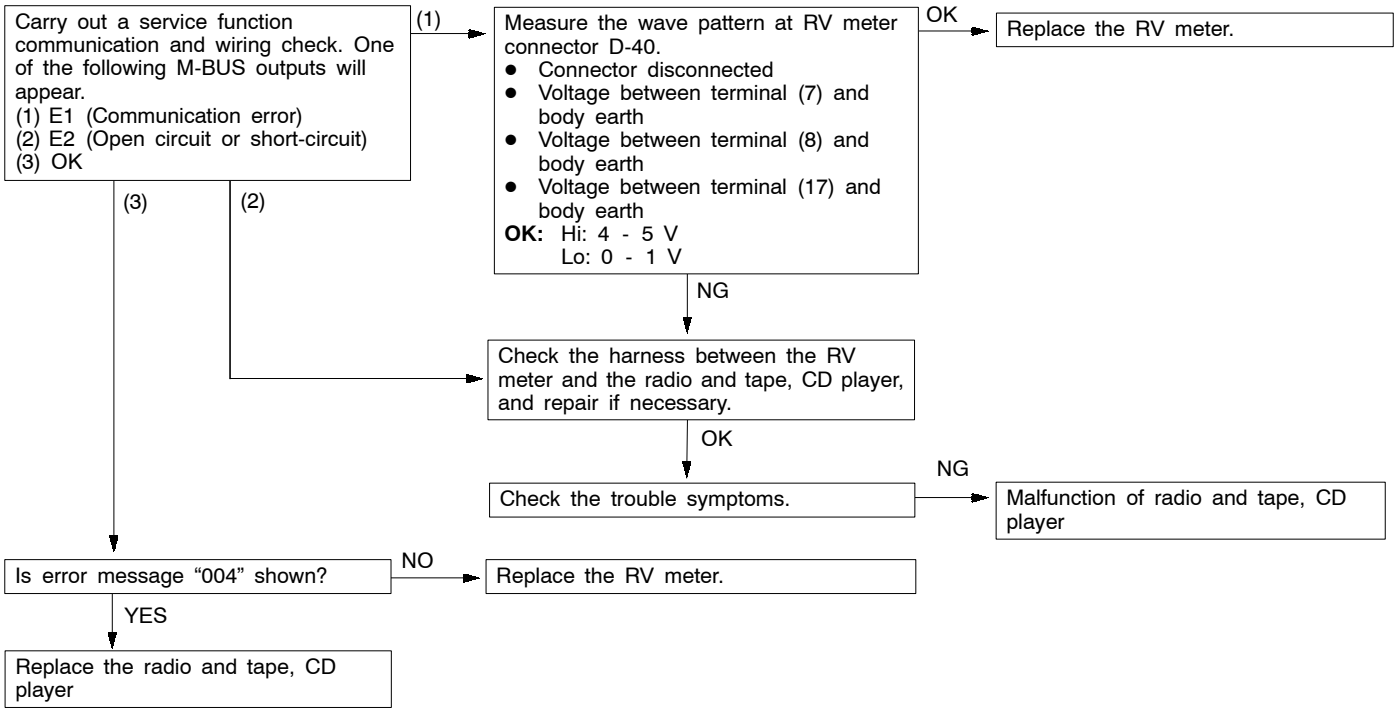


NOTE:

The contents of error messages shown in the audio display screen are as follows:

| Error message | Location and cause of malfunction |
|---|---|
| EJECT | A magazine for CD changer is not inserted. |
| NO DISC | CD is not inserted. |
| ERROR 001 | Program error in audio |
| ERROR 002 | Error in CD disk |
| ERROR 003 | Mechanical error in audio system |
| ERROR 004 | Communication error in audio system and RV meter, power supply error in audio system, and other errors |
| ERROR HOT | Heat protection for audio system |

Purchased from www.WorkshopManuals.co.uk

www.WorkshopManuals.co.uk

# RV METER

## REMOVAL AND INSTALLATION

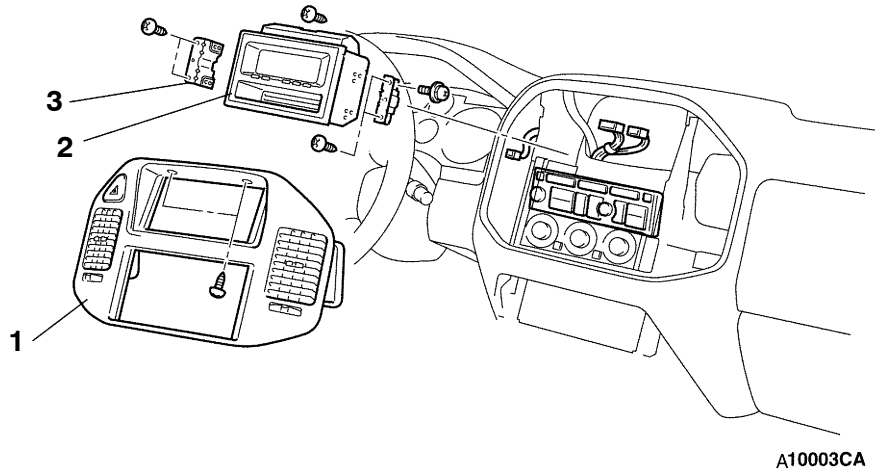


**Removal steps**

1. Center panel
   (Refer to GROUP 52A - Instrument Panel.)
2. RV meter
3. Bracket

Purchased from www.WorkshopManuals.co.uk

www.WorkshopManuals.co.uk

# GLASS ANTENNA

## ANTENNA FEEDER CABLE

### REMOVAL AND INSTALLATION

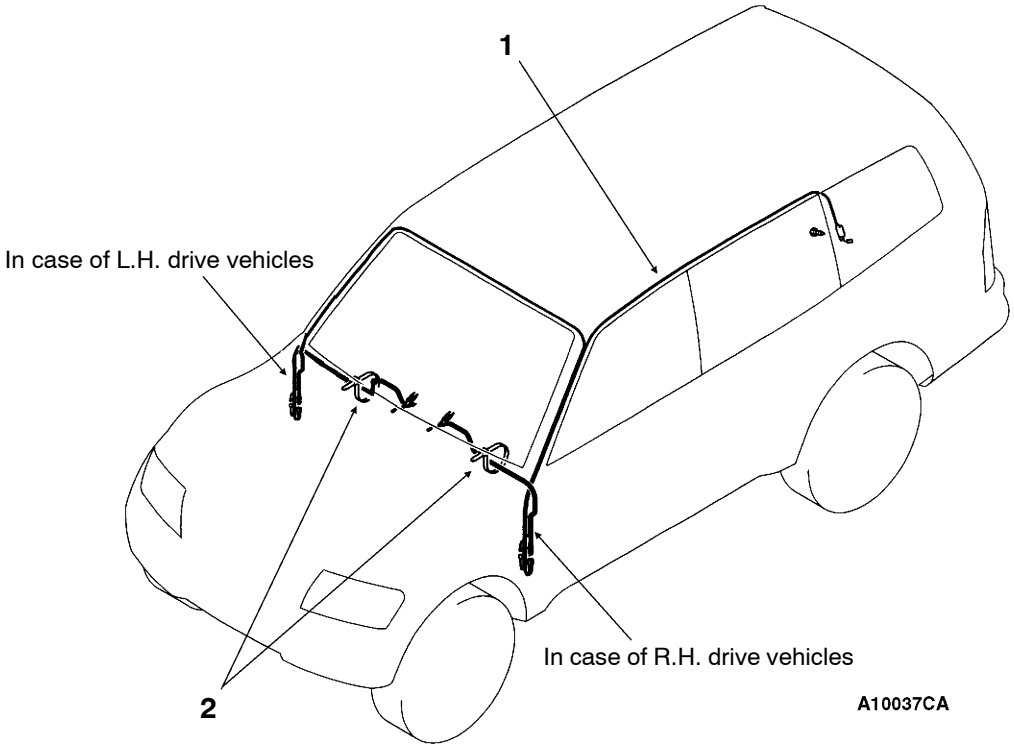


**Removal steps**

- Cowl side trim, front pillar, center pillar trim, quarter trim (Refer to GROUP 52A.)
- Head lining

1. Antenna feeder cable
- Instrument Panel (Refer to GROUP 52A)
2. Cable band

Purchased from www.WorkshopManuals.co.uk

www.WorkshopManuals.co.uk

# SMART WIRING SYSTEM (SWS)

**Click on the applicable bookmark to selected the required model year.**

Purchased from www.WorkshopManuals.co.uk

www.WorkshopManuals.co.uk


# SMART WIRING SYSTEM (SWS)

## CONTENTS

**GENERAL INFORMATION . . . . . 2**

**SPECIAL TOOLS . . . . . 7**

**TROUBLESHOOTING . . . . . 8**

Standard Flow of Diagnostic Troubleshooting . . . . . 8

Diagnostic Function . . . . . 8

Diagnosis Code Chart . . . . . 9

Diagnosis Code Inspection Procedures . . . . . 10

Trouble Symptom Chart . . . . . 13

Inspection Procedure for Trouble Symptoms . . . . . 17

Check at ECU Terminals . . . . . 54

**ON-VEHICLE SERVICE . . . . . 60**

Adjustment Procedures for SWS Function . . 60

Purchased from www.WorkshopManuals.co.uk

www.WorkshopManuals.co.uk

# GENERAL INFORMATION

## COMMUNICATION LINE

Data lines for multiplex communication are connected between the front-ECU, ETACS-ECU, column switch assembly, sunroof motor assembly, center display, power window main switch, and power window motors as illustrated below.

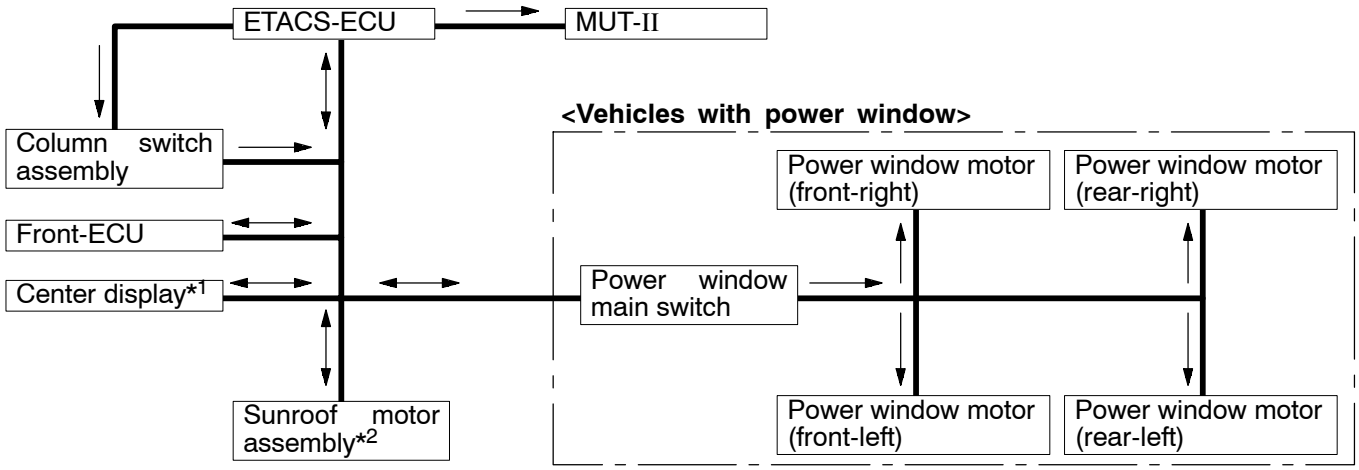


NOTE
→ : Uni-directional communication line
↔ : Bi-directional communication line
*1: Vehicles with center display
*2: Vehicles with sunroof

## OPERATION

### BUZZER

#### Light Reminder Warning Buzzer Function

When the driver's door is opened with lighting switch in the ON (tail lamp switch or headlamp switch) position and ignition switch in the LOCK (OFF) or ACC position, the buzzer will sound continuously to remind the driver that the lamps (tail lamps or headlamps) are ON.
This function does not work if the lighting switched off through the headlamp automatic shutdown function. In addition, the ignition key reminder warning buzzer function has a priority over this function.

#### Center Display Operation Annunciation Function <Vehicles with Center Display>

On vehicles with center display, the buzzer (peeps) sounds when the operation switch of the audio and navigation system is pressed.

### CENTRAL DOOR LOCKING SYSTEM <Vehicles with Central Door Locking System>

#### Central Door Locking System Operation

When the lock switch is turned ON after the unlock switch on the driver's door lock actuator switch is OFF, the ETACS-ECU gives a lock output for 0.5 second. When the unlock switch is turned ON after the lock switch on the driver's door lock actuator switch is OFF, the ETACS-ECU gives an unlock output for 0.5 second.
When the front passenger's door key or back door key is operated, the ETACS-ECU gives a lock or unlock output for 0.5 second.

#### Forgotten Key Prevention Function

If, with the key reminder switch OFF and the driver's door switch ON, the driver's door lock switch is turned ON after the door unlock switch in the front door lock actuator is turned OFF, the ETACS-ECU waits 0.3 second then give an unlock relay output for 0.5 second, there by preventing the doors from being locked. This operation prevents the ignition key from being locked inside the vehicle. This function takes precedence over the central door locking control function.

Purchased from www.WorkshopManuals.co.uk

www.WorkshopManuals.co.uk

## POWER WINDOWS

### Power Windows Operation

A signal line dedicated for transmission of multiplex communication data is connected between the power window main switches and the power window motor-ECU.
Communication is uni-directional. The power window main switches have a transmitting circuit only, whereas the power window sub switches have a receiving circuit only.

### Power Window Timer Function

With the ignition switch in the ON position, the power window relay and power window switch receipt permission signal (a SWS signal transmitted from the ETACS-ECU) are turned ON [the power window switch receipt permission signal remains ON for 30 seconds after the ignition switch is turned LOCK (OFF)], enabling opening and closing of the windows. The power window relay goes ON for additional 30 seconds. If the driver's door is subsequently closed during this period, the receipt permission signal goes OFF. The power window relay goes OFF 10 seconds after the receipt permission signal goes OFF.
If the driver's door is opened during timer operation, the receipt permission signal goes ON for additional 30 seconds. If the driver's door is subsequently closed during this period, the receipt permission signal goes OFF ten seconds after the receipt permission signal goes OFF.

## KEYLESS ENTRY SYSTEM <Vehicles with Keyless Entry System>

### Keyless Entry System Operation

If the transmitter LOCK or UNLOCK switch is pressed while the ignition key is removed and all of the doors are closed, the doors can be locked or unlocked.

### Keyless Entry Answerback Function

The keyless entry hazard answerable function facilitates confirmation of door locking and unlocking operations even in daylight. When a LOCK signal from the keyless entry transmitter is applied to the ETACS-ECU, all of the turn-signal lamps flash twice. When an UNLOCK signal from the keyless entry transmitter is applied to the ETACS-ECU, all of the turn-signal lamps flash four times. Note that an unlock switch has change from OFF to ON.

NOTE
The hazard answer back is enabled or disabled by the configuration function.

## SUNROOF <Vehicles with Sunroof>

### Sunroof Operation

All of the slide open/close, tilt up/down, and stop operations can be performed by a single switch. When the roof lid glass is tilted up, the sunshade opens approximately 98 mm in combined operation with the roof lid glass for better ventilation.
A jam preventing mechanism has been adopted. When a slide-close or tilt-down operation is blocked by an external force, the roof lid glass moves back and stops.

### Sunroof Timer Function

When the ignition switch is turned from ON position to LOCK (OFF) or ACC position, the sunroof will be ready to work for 30 seconds.
If the driver's door is opened during the timer operation, the timer operates for another 30 seconds starting from that point. However, the timer operation discontinues if the door is closed during that period.

Purchased from www.WorkshopManuals.co.uk

www.WorkshopManuals.co.uk

## WINDSHIELD WIPER AND WASHER

### Windshield Low-speed/High-speed Wiper Operation

- If the windshield low-speed wiper switch is turned to the ON position with the ignition switch at the ACC or ON position, the column switch sends a low-speed wiper ON and high-speed wiper OFF signals to the front-ECU.
  This turns the wiper signal on and the wiper speed switching relay off (low-speed), causing the wipers to operate at low-speed.
- If the windshield high-speed wiper switch is turned to the ON position, the column switch sends a low-speed wiper OFF and high-speed wiper ON signals to the front-ECU.
  This turns both the wiper signal and the wiper speed switching relay on (high-speed), causing the wipers to operate at high-speed.

### Windshield Intermittent Wiper Operation

The ETACS-ECU calculates the wiper operation interval according to the voltage signal sent from the column switch. Then the ETACS-ECU sends a signal to the front-ECU. The front-ECU determines the wiper operation interval and turns on the wiper signal relay. This causes the wiper auto stop relay to turn on. Then the wiper auto stop relay will turn off after the wipers reach the park position. This causes the wiper signal relay and then the wipers to turn off. If the wiper signal relay remains off for the wiper operation interval, the relay turns on again, causing the wipers to operate in intermittent mode.

### Windshield Mist Wiper Operation

- If the windshield mist wiper switch of the column switch is turned to the ON position with the ignition switch at ACC or ON position, the mist wiper high-speed operation signal is sent to the front-ECU. This signal turns on the wiper speed switching relay, causing the wipers to work at high-speed while the mist switch is on.
- While the windshield mist wiper switch remains turned on when the intermittent mode is still working, the wipers work as the mist wiper. However, the wipers return to the intermittent mode again when the wiper auto stop signal turns on after the mist wiper switch is turned off.

### Windshield Washer Operation

If the windshield washer switch of the column switch is turned to the ON position with the ignition switch at ACC or ON position, the windshield washer ON signal is sent to the front-ECU, causing the windshield wiper signal to turn on after 0.3 seconds. After the windshield washer switch signal turns off, the windshield wiper signal turns off in three seconds.
If the windshield wiper switch is turned to the ON position while the windshield wiper is at intermittent mode, the windshield washer works for that period when the windshield washer switch remains on. Then the wipers return to the intermittent mode.

## REAR WIPER AND WASHER <Vehicles with Rear Wiper and Washer>

### Rear Wiper Operation

If the rear wiper switch is turned to the ON position with the ignition switch at ACC or ON position, the ETACS-ECU turns ON the rear wiper drive signal for three seconds (approx. two operations). 7.4 seconds later, the wiper begins the intermittent operation with 8 seconds' cycle.
If the shift lever <M/T> or selector lever <A/T> is moved to the R position when the rear wiper switch is turned to the ON position and the ignition switch at ACC or ON position, back-up lamp switch <M/T> or inhibitor switch R <A/T> turns ON. One second later, the ETACS-ECU turns ON the rear wiper drive signal for three seconds (approx. two operations) to clear the rear field of view. 7.4 seconds later, the wiper returns to the intermittent operation with 8 seconds' cycle.

### Rear Washer Operation

If the rear washer switch is turned to the ON position with the ignition switch at ACC or ON position, the rear washer ON signal is sent to the ETACS-ECU, causing the rear wiper signal to turn on after 0.3 seconds. After the rear washer switch signal turns off, the rear wiper signal turns off in three seconds.
If the rear wiper is in intermittent operation when the rear washer switch is turned ON, the rear wiper again continues the intermittent operation with 8 seconds' cycle from 7.4 seconds later since the rear drive signal is turned OFF.

Purchased from www.WorkshopManuals.co.uk

www.WorkshopManuals.co.uk

## HEADLAMP WASHER <Vehicles with Headlamp Washer>

If the headlamp washer switch at the steering column is placed in the ON position when the ignition switch is in the ACC or ON position and the headlamp switch is in the ON position, the headlamp washer drive signal is turned ON for 0.5 second.

## IGNITION KEY HOLE ILLUMINATION LAMP

When the ignition switch is turned to LOCK (OFF) or ACC position with the driver's door opened, the ignition key hole illumination lamp is illuminated.
If the door is closed in that state, the lamp goes out after 30 seconds. Vehicles with keyless entry system, it illuminates for 30 seconds after the ignition key is removed. In either case the lamp goes out when the ignition switch is turned to ON position.

## HEADLAMP

### Headlamp Automatic Shutdown Function

If the ignition switch is turned to LOCK (OFF) or ACC position, when the headlamps are on, the headlamps will be switched off in three minutes. If the driver's door is opened within that three-minute period, the headlamps will be switched off automatically. This prevents the battery from discharged.
In addition, if the headlamps are turned on when the ignition switch is at LOCK (OFF) or ACC position, the headlamps will not be switched off.

### Headlamp Dimmer Switch Automatic Reset Function

This function allows the dimmer switch to be reset to the low-beam position whenever the headlamp switch is turned ON.

### Daytime Running Lamp (DRL) Function <Vehicles with DRL>

If the ignition switch is turned to ON when the headlamps and tail lamps are off, the headlamps (low-beam) and tail lamps turn on.

## FLASHER TIMER

### Turn-signal Lamp

When the ignition switch is turned to ON position and turn-signal lamp switch is placed in the ON position for right or left turn signaling, the system generates turn-signal lamp drive signals (flashing signals).
The system also notifies of a blown turn-signal lamp bulb by shortening the flashing intervals of the corresponding indicator lamp.

### Hazard Warning Lamp

The system detects a change from ON to OFF of the hazard lamp input signal and activates the hazard lamps if they are not in operation or deactivates the lamps if they are operating (reversal of state between activation and deactivation).

## FRONT FOG LAMP <Vehicles with Front Fog Lamp>

If the front fog lamp switch is turned ON at the condition that the headlamp or the tail lamp is turned ON (including the illumination by the automatic lighting function), the front fog lamp is turned ON.
Whenever the tail lamps are turned on at the next time, the front fog lamps will always be off regardless of the switch positions. In addition, if the tail lamp is switched off by the automatic lighting system, the front fog lamp will also be switched off. However, the front fog lamp will be illuminated when the tail lamp is switched on.

Purchased from www.WorkshopManuals.co.uk

www.WorkshopManuals.co.uk

## REAR FOG LAMP

If the fog lamp switch is turned ON when the headlamp or the front fog lamp is turned On, the rear fog lamp is switched ON and OFF alternatively.

If the headlamp and the front fog lamp are turned OFF during lighting of the rear fog lamp, the rear fog lamp is turned OFF at the same time.

## ROOM LAMP <Vehicles with Keyless Entry System>

With the room lamp switch in the DOOR position, the ETACS-ECU controls the room lamp operation as follows:

- When a door is opened from outside or inside [with the ignition switch turned to LOCK (OFF) position]:
  When a door is opened, the ETACS-ECU causes the room lamp to be illuminated at the 100% intensity. When the door is closed, it dims out the room lamp to 65% intensity and approx. 30 seconds later, turns out the lamp completely. During this period (timer controlled period), the room lamp goes out if the ignition switch is turned to ON position or the doors are locked.
- When a door is opened or closed with the ignition switch in the ON position:
  The room lamp illuminates at 100% intensity when a door is opened and turned out when it is closed.
- When no door is opened and the ignition key is removed:
  When the ignition key is removed with all the doors closed, the room lamp is illuminated at an intensity of 100% and turned out approx. 30 seconds later. During that time (timer-controlled period), the room lamp goes out if the ignition key is inserted and turned to ON position or the door locking system is activated.
- Room lamp's answerback operation in response to door lock control by keyless entry system:
  To allow the driver to ascertain the result of the door locking/unlocking control action by the use of the keyless entry system, the ETACS-ECU causes the room lamp to blink twice when the doors are locked through the system and to illuminate for approx. 15 seconds when the doors are locked.
  The room lamp's answerback operation in response to a keyless entry system control action is accompanied by operation of the hazard warning lamps.

Purchased from www.WorkshopManuals.co.uk

www.WorkshopManuals.co.uk

# SPECIAL TOOLS

| Tool | Number | Name | Use |
|---|---|---|---|
| 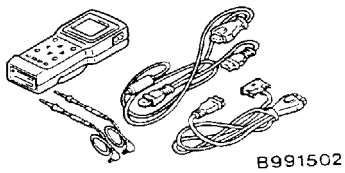 B991502 | MB991502 | MUT-II sub assembly | Checking of the SWS (Diagnosis code display and input check with the MUT-II) |
| 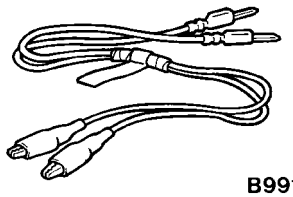 B991529 | MB991529 | Diagnosis code check harness | Simple diagnosis |
| A B 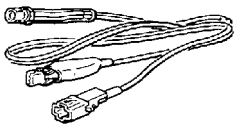 C 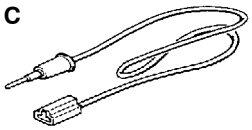 D C991223 | MB991223<br>A: MB991219<br>B: MB991220<br>C: MB991221<br>D: MB991222 | Harness set<br>A: Test harness<br>B: LED harness<br>C: LED harness adapter<br>D: Probe | Measurement of terminal voltage at ECUs<br>A: Connector pin contact pressure inspection<br>B: Power circuit inspection<br>C: Power circuit inspection<br>D: Commercial tester connection |

Purchased from www.WorkshopManuals.co.uk

www.WorkshopManuals.co.uk

# TROUBLESHOOTING

## STANDARD FLOW OF DIAGNOSTIC TROUBLESHOOTING

Refer to GROUP 00 – How to Use Troubleshooting/Inspection Service Points.

## DIAGNOSTIC FUNCTION

### DIAGNOSIS CODES CHECK

Use the MUT-II to check a diagnosis code.
(Refer to GROUP 00 – How to Use Troubleshooting/Inspection Service Points.)

NOTE
Connect the MUT-II to the 16-pin diagnosis connector (black).

### INPUT SIGNAL CHECK

1. Use the MUT-II to check a input signal.
   (Refer to GROUP 00 – How to Use Troubleshooting/Inspection Service Points.)
2. In this condition, the following input switches can be checked.
3. If an abnormality is found during the input signal check, carry out troubleshooting while referring to the Trouble Symptom Check page.

**Input Signal Check Function**

| Input signal | Buzzer operation condition |
|---|---|
| Ignition switch (ACC) | Turned from LOCK (OFF) to ACC |
| Ignition switch (IG1) | Turned from ACC to ON |
| Key reminder switch <Vehicles with keyless entry system> | Ignition key removed from ignition key cylinder (from inserted position) |
| Hazard warning lamp switch | Turned from OFF to ON |
| Front fog lamp switch <Vehicles with front fog lamp> | |
| Rear fog lamp switch | |
| Back-up lamp switch <M/T, vehicles with rear wiper and washer> | Shift lever moved to R position |
| Inhibitor switch (reverse) <A/T, vehicles with rear wiper and washer> | Selector lever moved to R position |
| Rear wiper motor auto-stop signal <Vehicles with rear wiper and washer> | Rear wiper begins to operate (The input signal is sent before the rear wiper begins to operate) |
| Driver's door switch | Driver's door opened from closed condition |
| Door switches | All doors closed to any door opened |
| Front passenger's or back door lock key cylinder switch <Vehicles with central door locking system> | Turn the key to the locked or unlock |
| Driver's door lock actuator switch <Vehicles with central door locking system> | Driver's door lock knob moved from lock position to unlock position or vice versa |

Purchased from www.WorkshopManuals.co.uk

www.WorkshopManuals.co.uk

| Input signal | | Buzzer operation condition |
|---|---|---|
| Column switch | Tail lamp switch | Turned the lighting switch from OFF to tail lamp position |
| | Headlamp switch | Turn the lighting switch from tail lamp position to headlamp position |
| | Dimmer switch | Turned from OFF to ON |
| | Passing switch | |
| | Turn-signal lamp switch | |
| | Windshield mist wiper switch | |
| | Windshield intermittent wiper switch | |
| | Windshield low-speed wiper switch | |
| | Windshield high-speed wiper switch | |
| | Windshield intermittent wiper interval adjusting knob | Rotate the windshield intermittent wiper interval adjusting knob from FAST to SLOW when the ignition switch is in ON position (The ETACS-ECU sends a signal around the medium knob position) |
| | Windshield washer switch | Turned from OFF to ON |
| | Rear wiper switch <Vehicles with rear wiper and washer> | |
| | Rear washer switch <Vehicles with rear wiper and washer> | |
| | Headlamp washer switch <Vehicles with headlamp washer> | |
| Power window main switch | Any switch <Vehicles with power window> | Turned from OFF to ON |
| Transmitter | Any switch <Vehicles with keyless entry system> | Turned from OFF to ON |
| Sunroof switch | Any switch <Vehicles with sunroof> | Turned from OFF to ON |
| Center display | Any switch <Vehicles with center display> | Turned from OFF to ON |

# DIAGNOSIS CODE CHART

| Code No. | Diagnosis item | Reference page |
|---|---|---|
| 11 | Failure concerning the ETACS-ECU | 54B-10 |
| 12 | Failure concerning the column switch or improper connecting with the ETACS-ECU | 54B-10 |
| 13 | Failure concerning the front-ECU | 54B-11 |
| 21 | Short circuit in communication line | 54B-12 |

Purchased from www.WorkshopManuals.co.uk

www.WorkshopManuals.co.uk

# DIAGNOSIS CODE INSPECTION PROCEDURES

| Code No.11 Failure concerning the ETACS-ECU | Probable cause |
|---|---|
| The ETACS-ECU monitors its own communication data, and sends a diagnosis code when an error takes place consecutive fifteen times in 0.6 second.<br>The diagnosis code will be erased when the ETACS-ECU determines that its own communication data is sent consecutive 15 times in 0.6 second. | • Malfunction of ETACS-ECU |

Replace the ETACS-ECU.

| Code No.12 Failure concerning the column switch or improper connection with the ETACS-ECU | Probable cause |
|---|---|
| This diagnosis code is displayed when the column switch sends a signal regardless of the transmission request signal from the ETACS-ECU (three times or more in one second).<br>The diagnosis code is erased when the column switch continues to send a signal according to the transmission request signal from the ETACS-ECU for one second. | • Malfunction of column switch<br>• Malfunction of ETACS-ECU<br>• Malfunction of wiring harness or connector |

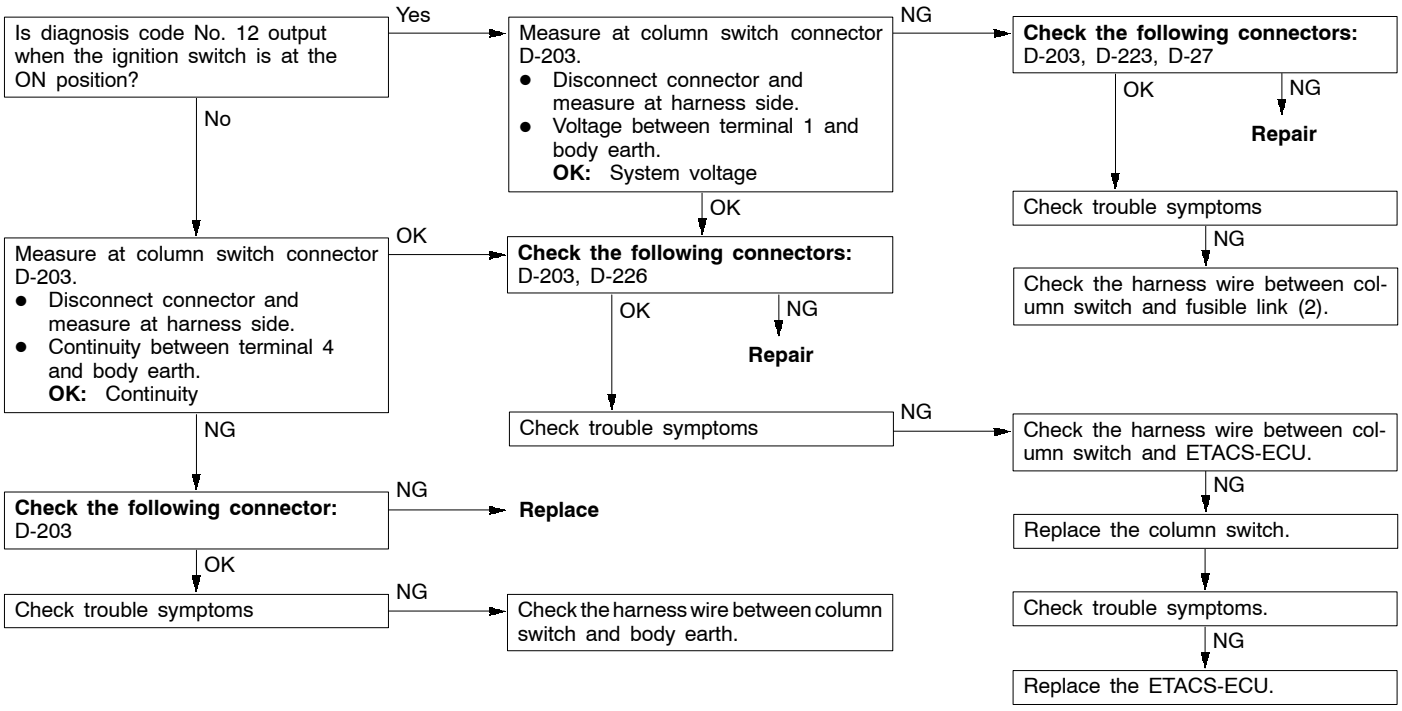


Purchased from www.WorkshopManuals.co.uk

www.WorkshopManuals.co.uk

| Code No.13 Failure concerning the front-ECU | Probable cause |
|---|---|
| This diagnosis code is displayed when the signals that the front-ECU sends to the ETACS-ECU are errors consecutive fifteen times in 0.6 second.<br>The diagnosis code will be erased when the front-ECU sends normal signals to the ETACS-ECU consecutive 15 times in 0.6 second. | • Malfunction of front-ECU<br>• Malfunction of ETACS-ECU<br>• Malfunction of wiring harness or connector |

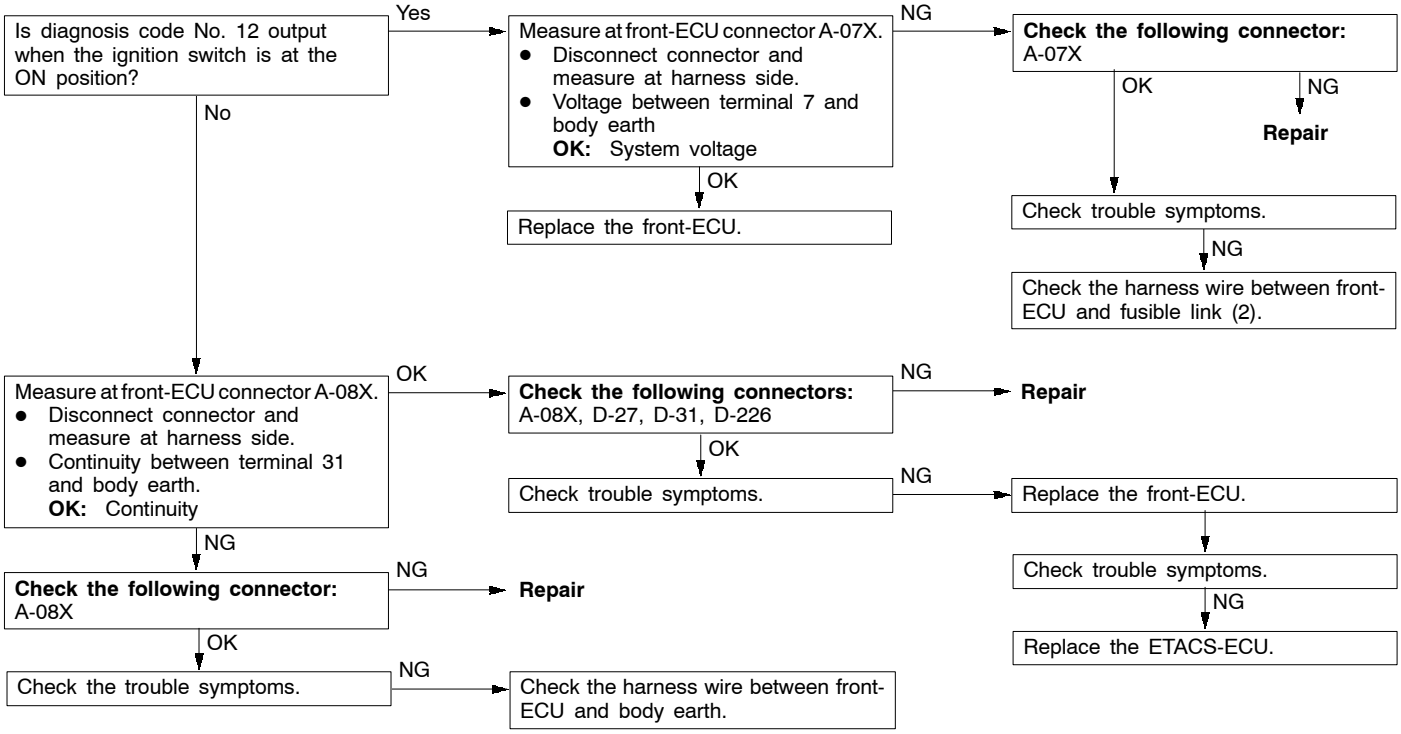


Purchased from www.WorkshopManuals.co.uk

www.WorkshopManuals.co.uk

| Code No.21 Short circuit in communication lines | Probable cause |
|---|---|
| This diagnosis code is displayed when the SWS communication line voltage reaches the LO level for 0.3 second. The diagnosis code is erased when voltage in the ETACS-ECU data line reaches the HI level for 0.3 second, or the ETACS-ECU receives a normal signal from other ECUs or switches. While this code is displayed, other codes are not displayed. | • Malfunction of column switch<br>• Malfunction of front-ECU<br>• Malfunction of power window main switch <vehicles with power window><br>• Malfunction of sunroof motor assembly <vehicles with sunroof><br>• Malfunction of center display <vehicles with center display><br>• Malfunction of ETACS-ECU<br>• Malfunction of wiring harness or connector |

**Check the following connectors:**
A-08X, D-06, D-25, D-27, D-29, D-31, D-203, D-226, F-02, F-06, H-05
- NG → **Repair**
- OK ↓

Check trouble symptoms.
- NG ↓

Check the harness wires between column switch and ETACS-ECU, front-ECU and ETACS-ECU, power window main switch and ETACS-ECU, sunroof motor assembly and ETACS-ECU, center display and ETACS-ECU.
- NG → **Repair**
- OK ↓

Is diagnosis code No. 21 no longer output when column switch connector D-203 is disconnected? (However, code No. 12 is still output.)
- Yes → Replace the column switch.
- No ↓

Is diagnosis code No. 21 no longer output when front-ECU connector A-08X is disconnected? (However, code No. 13 is still output.)
- Yes → Replace the front-ECU.
- No ↓

Is diagnosis code No. 21 no longer output when power window main switch connector H-05 is disconnected?
- Yes → Replace the power window main switch.
- No ↓

Is diagnosis code No. 21 no longer output when sunroof motor assembly connector F-06 is disconnected?
- Yes → Replace the sunroof motor assembly.
- No ↓

Is diagnosis code No. 21 no longer output when center display connector D-06 is disconnected?
- Yes → Replace the center display.
- No ↓

Replace the ETACS-ECU.

Purchased from www.WorkshopManuals.co.uk

www.WorkshopManuals.co.uk

# TROUBLE SYMPTOM CHART

| Trouble symptom | | Inspection procedure | Reference page |
|---|---|---|---|
| Communication with the MUT-II is impossible. | | A-1 | 54B-17 |
| Buzzer | Light reminder warning buzzer function does not work normally. | B-1 | 54B-17 |
| | Center display operation annunciation function does not work normally. | B-2 | 54B-18 |
| Central door locking system | Central door locking system does not work normally. | C-1 | 54B-18 |
| | Some doors does not lock or unlock. | C-2 | 54B-19 |
| | Some functions of central locking system do not work. | C-3 | 54B-19 |
| | Forgotten key prevention function does not work. | C-4 | 54B-20 |
| Power window | Power window does not work at all. | D-1 | 54B-20 |
| | Power window main switch can not operate driver's window. | D-2 | 54B-21 |
| | Power window sub switch can not operate front passenger's or rear window. | D-3 | 54B-22 |
| | Power window main switch can not operate front passenger's or rear window. | D-4 | 54B-23 |
| | Power window timer function does not work normally. | D-5 | 54B-23 |
| | When the glass is raised, it then lowers automatically. | D-6 | 54B-24 |
| | The glass is not lowered when something is jammed in the window. | D-7 | 54B-24 |
| | When the glass is fully raised, it then lowers automatically. | D-8 | 54B-24 |
| Keyless entry system | Keyless entry system does not operate. | E-1 | 54B-24 |
| | The room lamp and hazard warning lamps do not operate through the answerback function. | E-2 | 54B-25 |
| | The encrypted code cannot be registered. | E-3 | 54B-25 |
| Sunroof | Sunroof does not work at all. | F-1 | 54B-26 |
| | Sunroof timer function does not work normally. | F-2 | 54B-27 |
| | Safety mechanism does not function. | F-3 | 54B-27 |

Purchased from www.WorkshopManuals.co.uk

www.WorkshopManuals.co.uk

| Trouble symptom | | Inspection procedure | Reference page |
|---|---|---|---|
| Windshield wiper and washer | Windshield wiper does not operate. | G-1 | 54B-28 |
| | Windshield wiper does not stop at the predetermined park position. | G-2 | 54B-29 |
| | Any of the windshield wiper switch positions is defective. | G-3 | 54B-29 |
| | Windshield intermittent wiper interval cannot be adjusted. | G-4 | 54B-30 |
| | Windshield washer does not work. | G-5 | 54B-30 |
| Rear wiper and washer | Rear wiper does not work at all. | H-1 | 54B-31 |
| | Rear wiper does not stop at the predetermined park position. | H-2 | 54B-31 |
| | When the shift lever <M/T> or selector lever <A/T> is moved to R position during the rear wiper operation, the rear wiper does not operate at the continuous mode. | H-3 | 54B-32 |
| | Rear washer does not work. | H-4 | 54B-32 |
| Headlamp washer | Headlamp washer does not work. | I-1 | 54B-33 |
| Ignition key hole illumination lamp | Ignition key hole illumination lamp does not work normally. | J-1 | 54B-34 |
| Headlamp, tail lamp | Tail lamp do not illuminate. | K-1 | 54B-34 |
| | Headlamps (low-beam) do not illuminate. | K-2 | 54B-35 |
| | Headlamps (high-beam) do not illuminate. | K-3 | 54B-35 |
| | Headlamps do not illuminate when the passing switch is operated. | K-4 | 54B-36 |
| | The headlamp automatic shutdown function does not work normally. | K-5 | 54B-36 |
| | Headlamp dimmer switch automatic reset function does not work normally. | K-6 | 54B-37 |
| | Daytime running lamp (DRL) function does not work. | K-7 | 54B-37 |
| Flasher timer | Turn-signal lamp do not flash when the turn-signal lamp switch is turned on. | L-1 | 54B-37 |
| | Hazard warning lamps do not flash when the hazard warning lamp switch is turned on. | L-2 | 54B-38 |
| Front fog lamp | Front fog lamps do not illuminate when the front fog lamp switch is turned on. | M-1 | 54B-39 |
| | Front fog lamp do not go out when the tail lamps are turned off while the front fog lamps are on. | M-2 | 54B-39 |

Purchased from www.WorkshopManuals.co.uk

www.WorkshopManuals.co.uk

| Trouble symptom | | Inspection procedure | Reference page |
|---|---|---|---|
| Rear fog lamp | Rear fog lamp do not illuminate when the rear fog lamp switch is turned on. | N-1 | 54B-40 |
| | Rear fog lamp do not go out when the headlamps and front fog lamps are turned off while the rear fog lamp is on. | N-2 | 54B-40 |
| Room lamp | Room lamp does not illuminate. | O-1 | 54B-41 |
| | Room lamp dimming function does not work normally. | O-2 | 54B-41 |
| Center display | Center display does not work normally. | – | GROUP 54A – Center Display. |

## DEFECTS FOUND BY INPUT SIGNAL CHECK

If the input signal check finds a defect, follow the table below to check.

| Trouble symptom | Inspection procedure | Reference page |
|---|---|---|
| Ignition switch (ACC) signal is not sent to the ETACS-ECU. | P-1 | 54B-42 |
| Ignition switch (IG1) signal is not sent to the ETACS-ECU. | P-2 | 54B-42 |
| Key reminder switch signal is not sent to the ETACS-ECU. | P-3 | 54B-43 |
| Hazard warning lamp switch signal is not sent to the ETACS-ECU. | P-4 | 54B-43 |
| Front fog lamp switch signal is not sent to the ETACS-ECU. | P-5 | 54B-44 |
| Rear fog lamp switch signal is not sent to the ETACS-ECU. | P-6 | 54B-45 |
| Back-up lamp switch signal is not sent to the ETACS-ECU. <M/T> | P-7 | 54B-45 |
| Inhibitor switch (reverse) signal is not sent to the ETACS-ECU. <A/T> | P-8 | 54B-46 |
| Rear wiper motor auto-stop signal is not sent to the ETACS-ECU. | P-9 | 54B-46 |
| Driver's door switch signal is not sent to the ETACS-ECU. | P-10 | 54B-47 |
| Door switches signal is not sent to the ETACS-ECU. | | |
| Front passenger's or back door lock key cylinder switch signal is not sent to the ETACS-ECU. | P-11 | 54B-48 |
| Driver's door lock actuator switch signal is not sent to the ETACS-ECU. | P-12 | 54B-48 |

Purchased from www.WorkshopManuals.co.uk

www.WorkshopManuals.co.uk

| Trouble symptom | | Inspection procedure | Reference page |
|---|---|---|---|
| Column switch | Tail lamp switch signal is not sent to the ETACS-ECU. | P-13 | 54B-49 |
| | Headlamp switch signal is not sent to the ETACS-ECU. | | |
| | Dimmer switch signal is not sent to the ETACS-ECU. | | |
| | Passing switch signal is not sent to the ETACS-ECU. | | |
| | Turn-signal lamp switch signal is not sent to the ETACS-ECU. | | |
| | Windshield mist wiper switch signal is not sent to the ETACS-ECU. | P-14 | 54B-50 |
| | Windshield intermittent wiper switch signal is not sent to the ETACS-ECU. | | |
| | Windshield low-speed wiper switch signal is not sent to the ETACS-ECU. | | |
| | Windshield high-speed wiper switch signal is not sent to the ETACS-ECU. | | |
| | Windshield intermittent wiper interval adjusting knob signal is not sent to the ETACS-ECU. | P-15 | 54B-50 |
| | Windshield washer switch signal is not sent to the ETACS-ECU. | P-14 | 54B-50 |
| | Rear wiper switch signal is not sent to the ETACS-ECU. | | |
| | Rear washer switch signal is not sent to the ETACS-ECU. | | |
| | Headlamp washer switch signal is not sent to the ETACS-ECU. | P-13 | 54B-49 |
| Power window main switch | Any switch signal is not sent to the ETACS-ECU. | P-16 | 54B-51 |
| Transmitter | Any switch signal is not sent to the ETACS-ECU. | P-17 | 54B-52 |
| Sunroof switch | Any switch signal is not sent to the ETACS-ECU. | P-18 | 54B-52 |
| Center display | Any switch signal is not sent to the ETACS-ECU. | P-19 | 54B-53 |

Purchased from www.WorkshopManuals.co.uk

www.WorkshopManuals.co.uk

# INSPECTION PROCEDURE FOR TROUBLE SYMPTOMS

## Inspection Procedure A-1

| Communication with the MUT-II is impossible. | Probable cause |
|---|---|
| The harness wires between the ETACS-ECU power supply line or the ETACS-ECU and the diagnosis connector may be defective. | • Malfunction of ETACS-ECU<br>• Malfunction of harness wire or connector |

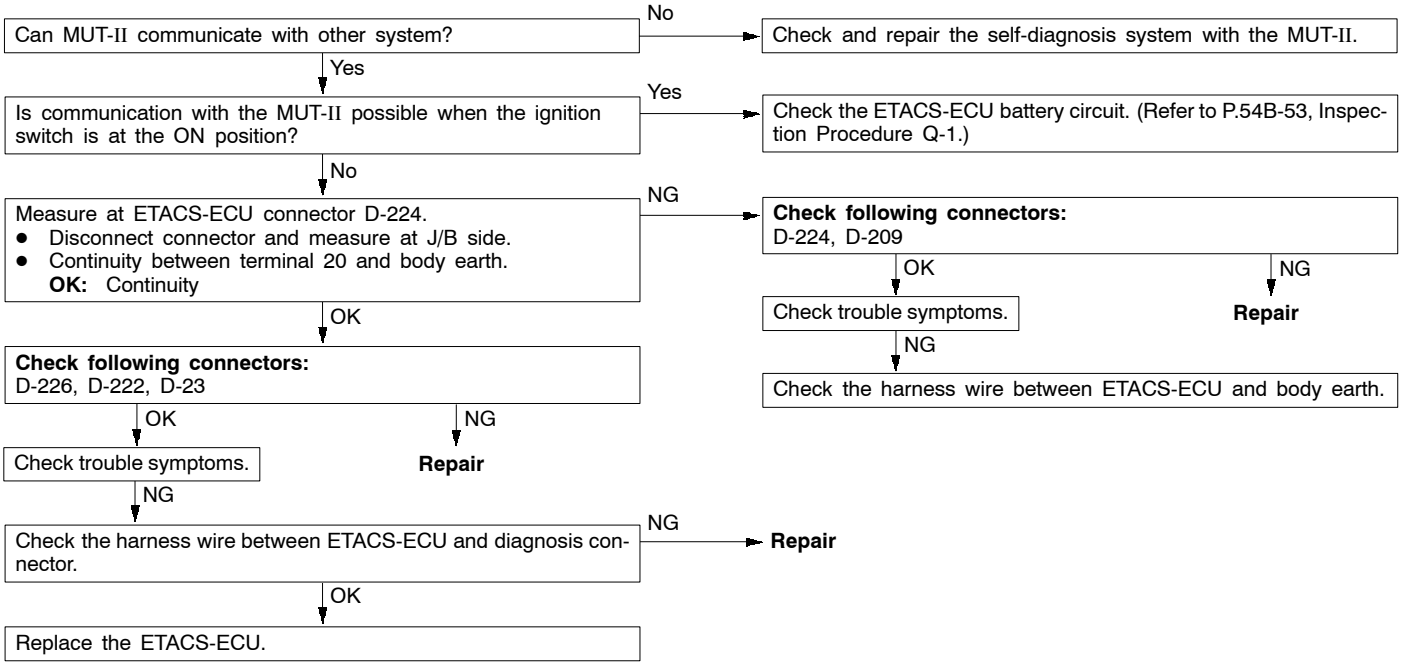


## Inspection Procedure B-1

| Buzzer: Light reminder warning buzzer function does not work normally. | Probable cause |
|---|---|
| The ETACS-ECU operates the light reminder warning buzzer function, based on input signals from the following switches:<br>• Ignition switch (IG1)<br>• Driver's door switch<br>• Tail lamp switch<br>• Headlamp switch<br>If the function does not work normally, a defect on the relevant circuit or the ETACS-ECU may be suspected. | • Malfunction of driver's door switch<br>• Malfunction of column switch<br>• Malfunction of ETACS-ECU<br>• Malfunction of harness wire or connector |

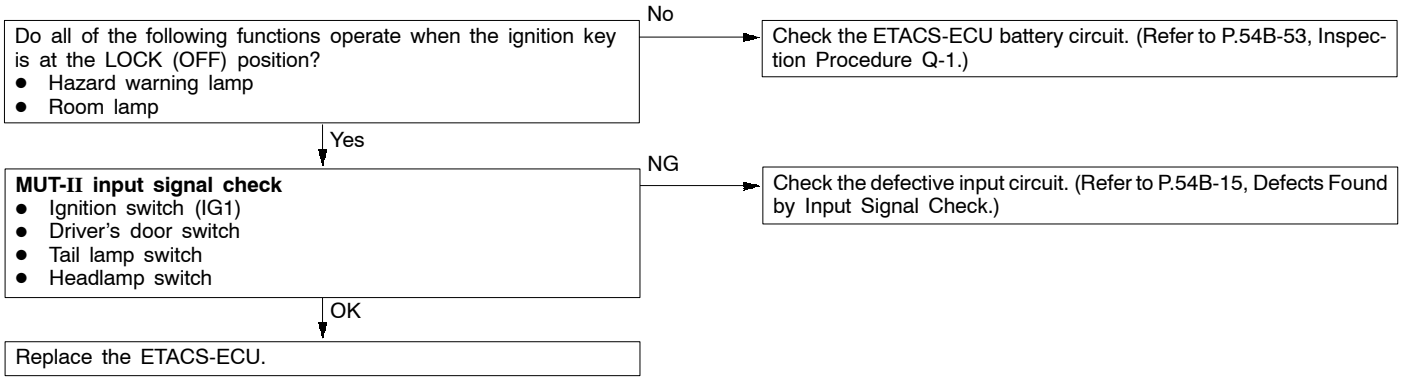


Purchased from www.WorkshopManuals.co.uk

www.WorkshopManuals.co.uk

## Inspection Procedure B-2

| Buzzer: Center display operation annunciation function does not work normally. | Probable cause |
|---|---|
| If the center display is operating normally, the cause is probably a malfunction in the harness between the center display and the ETACS-ECU or in the ETACS-ECU itself. | • Malfunction of center display<br>• Malfunction of ETACS-ECU<br>• Malfunction of harness wire or connector |

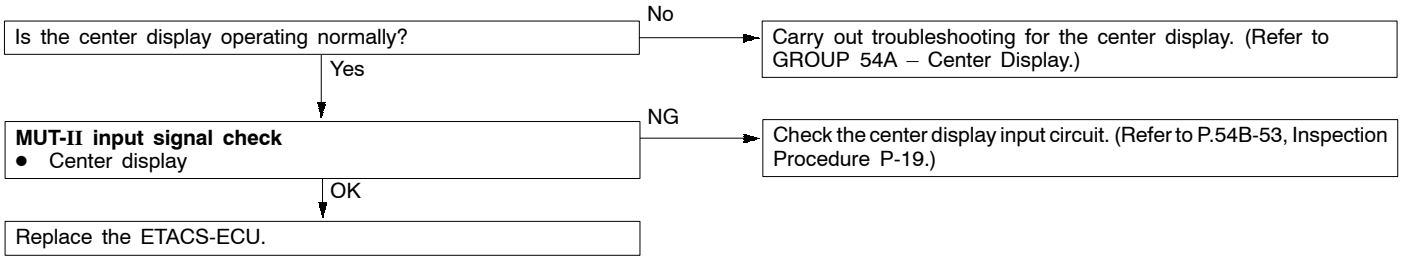


## Inspection Procedure C-1

| Central door locking system: Central door locking system does not work normally. | Probable cause |
|---|---|
| The power supply circuit, the circuit shared by door lock actuators, or the ETACS-ECU may be defective. | • Malfunction of ETACS-ECU<br>• Malfunction of harness wire or connector |

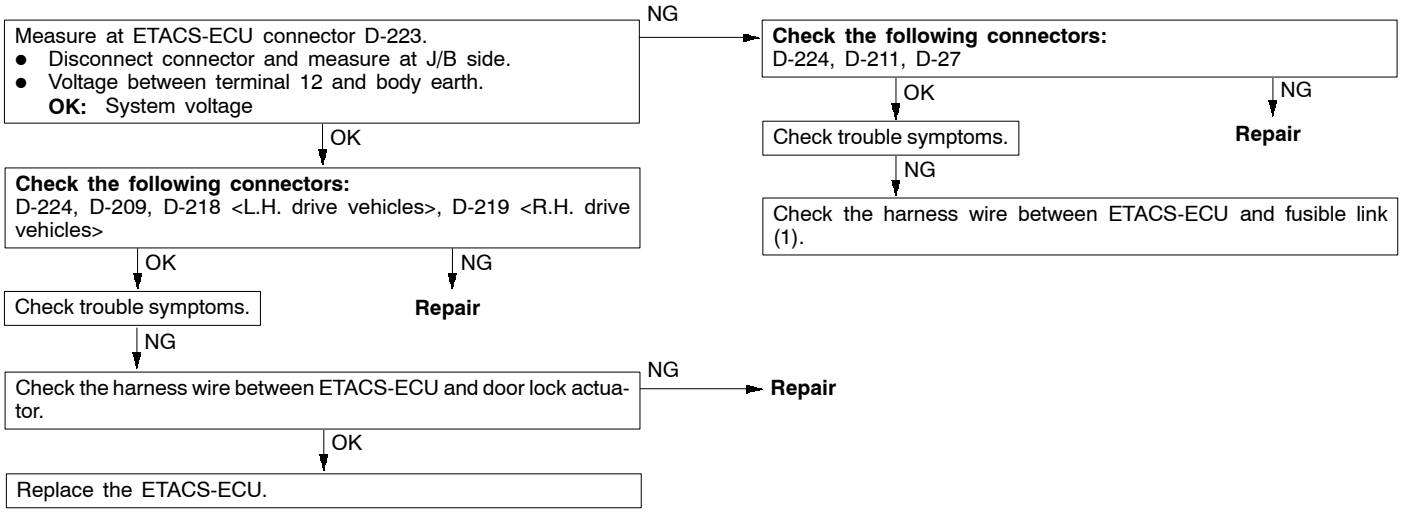


Purchased from www.WorkshopManuals.co.uk

www.WorkshopManuals.co.uk

## Inspection Procedure C-2

| Central door locking system: Some doors do not lock or unlock. | Probable cause |
|---|---|
| The door lock actuator, or the harness wire between ETACS-ECU and the door lock actuator may be defective. | • Malfunction of driver's, front passenger's, rear or back door lock actuator<br>• Malfunction of ETACS-ECU<br>• Malfunction of harness wire or connector |

Check the defective door lock actuator. (Refer to GROUP 42 – Door or GROUP 42 - Back Door.)
- NG → Replace the defective door lock actuator.
- OK ↓

**Check the following connectors <L.H. drive vehicles>:**
Front L.H. door: D-224, D-209, D-25, H-03
Front R.H. door: D-224, D-209, D-15, H-18
Rear L.H. door: D-224, D-218, D-26, F-18, H-12
Rear R.H. door:D-224, D-218, D-124, F-04, H-21
Back door: D-224, D-218, D-124, G-06, I-06

**Check the following connectors <R.H. drive vehicles>:**
Front L.H. door: D-224, D-209, D-31, D-15, H-03
Front R.H. door: D-224, D-209, D-31, D-25, H-18
Rear L.H. door: D-224, D-209, D-31, D-26, F-18, H-12
Rear R.H. door: D-223, D-219, F-04, H-21
Back door: D-224, D-219, G-06, I-06

- NG → **Repair**
- OK ↓

Check trouble symptoms.
- NG ↓

Check the harness wire between ETACS-ECU and defective door lock actuator.
- NG → **Repair**
- OK ↓

Replace the ETACS-ECU.

## Inspection Procedure C-3

| Central door locking system: Some functions of central locking system do not work. | Probable cause |
|---|---|
| The ETACS-ECU operates the central door locking system, based on input signals from the following switches:<br>• Front passenger's or back door lock key cylinder switch<br>• Driver's door lock actuator switch<br>If the system does not work normally, a defect on the relevant circuit or the ETACS-ECU may be suspected. | • Malfunction of front passenger's or back door lock key cylinder switch<br>• Malfunction of driver's door lock actuator switch<br>• Malfunction of ETACS-ECU<br>• Malfunction of harness wire or connector |

**MUT-II input signal check**
- Front passenger's or back door lock key cylinder switch
- Driver's door lock actuator switch

- NG → Check the defective input circuit. (Refer to P.54B-15, Defects Found by Input Signal Check.)
- OK ↓

Replace the ETACS-ECU.

Purchased from www.WorkshopManuals.co.uk

www.WorkshopManuals.co.uk

## Inspection Procedure C-4

| Central door locking system: Forgotten key prevention function does not work. | Probable cause |
|---|---|
| The ETACS-ECU operates the forgotten key prevention function, based on the input signals from the following switches:<br>● Key reminder switch<br>● Driver's door switch<br>● Driver's door lock actuator switch<br>If the function does not work normally, a defect on the relevant circuit or the ETACS-ECU may be suspected. | ● Malfunction of key reminder switch<br>● Malfunction of driver's door switch<br>● Malfunction of driver's door lock actuator<br>● Malfunction of ETACS-ECU<br>● Malfunction of harness wire or connector |

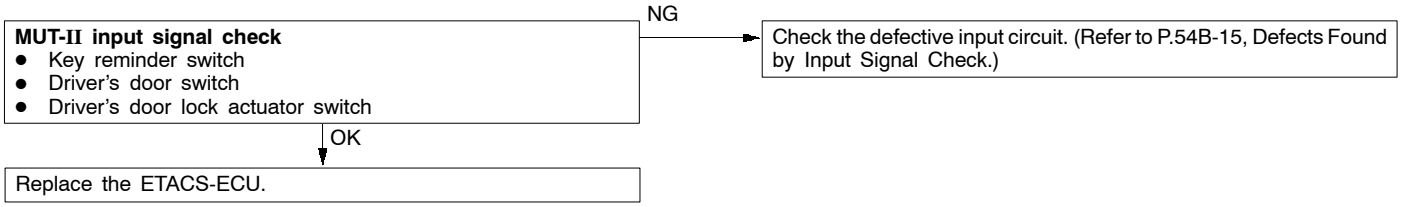


## Inspection Procedure D-1

| Power window: Power window do not work at all. | Probable cause |
|---|---|
| The power window relay or the ETACS-ECU may be defective. | ● Malfunction of power window relay<br>● Malfunction of ETACS-ECU<br>● Malfunction of harness wire or connector |

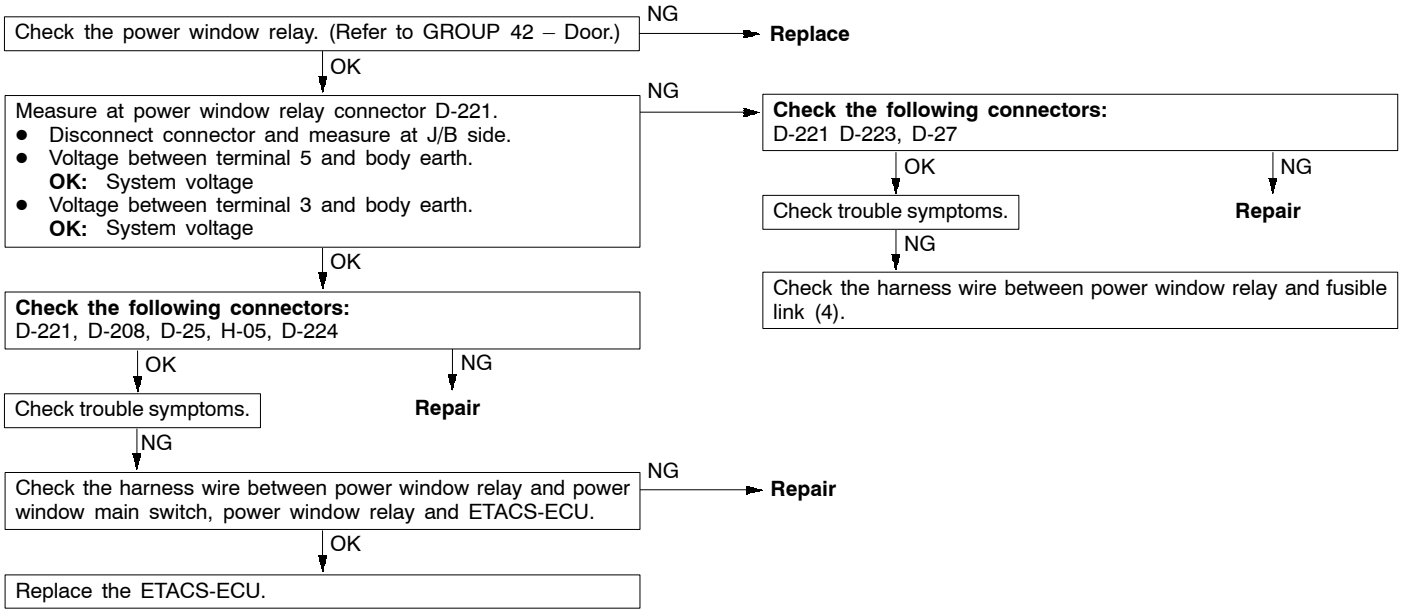


Purchased from www.WorkshopManuals.co.uk

www.WorkshopManuals.co.uk

## Inspection Procedure D-2

| Power window: Power window main switch can not operate driver's window. | Probable cause |
|---|---|
| The cause is probably a malfunction of the power window main switch or driver's side power window motor, or an abnormality in the power supply circuit. | • Malfunction of power window main switch<br>• Malfunction of driver's power window motor<br>• Malfunction of harness wire or connector |

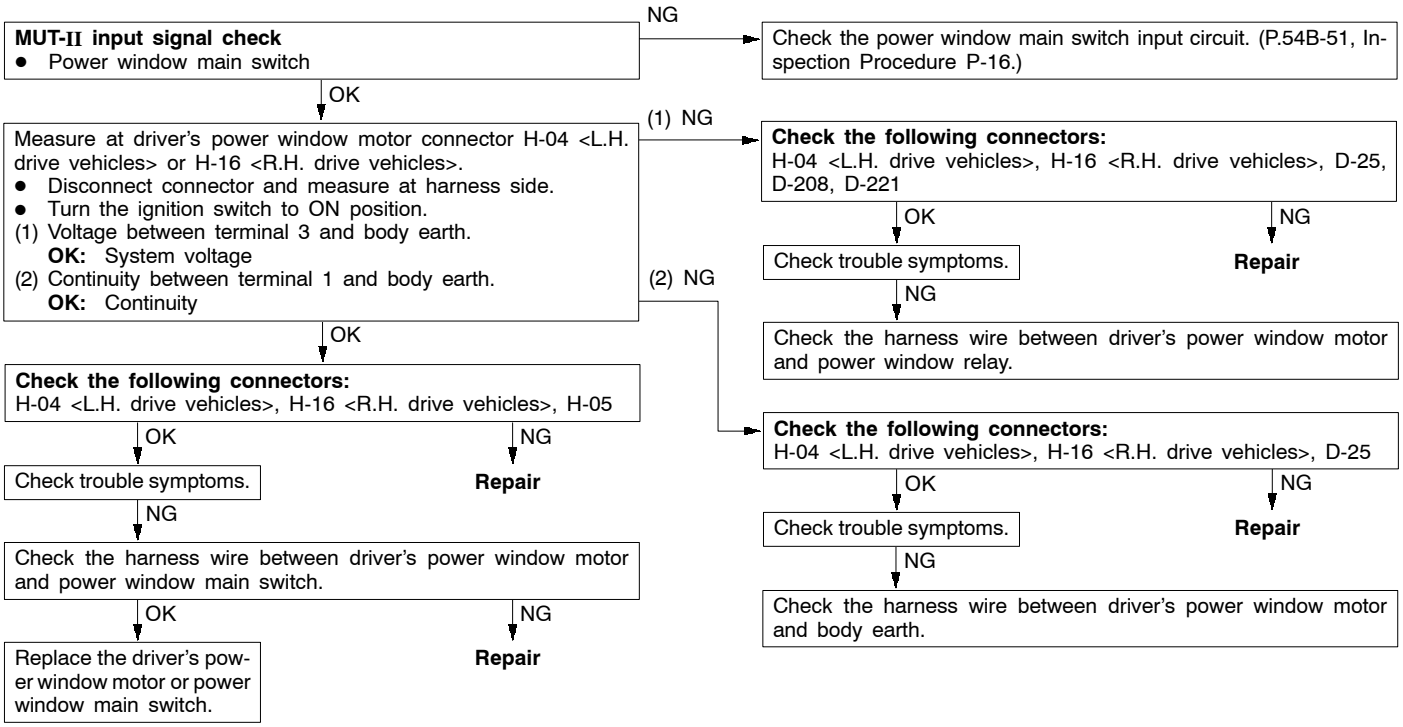


Purchased from www.WorkshopManuals.co.uk

www.WorkshopManuals.co.uk

## Inspection Procedure D-3

| Power window: Power window sub switch can not operate front passenger's or rear window. | Probable cause |
|---|---|
| The cause is probably a malfunction of the power window sub switch or front passenger's or rear power window motor, or an abnormality in the power supply circuit. | • Malfunction of power window sub switch<br>• Malfunction of front passenger's or rear power window motor<br>• Malfunction of harness wire or connector |

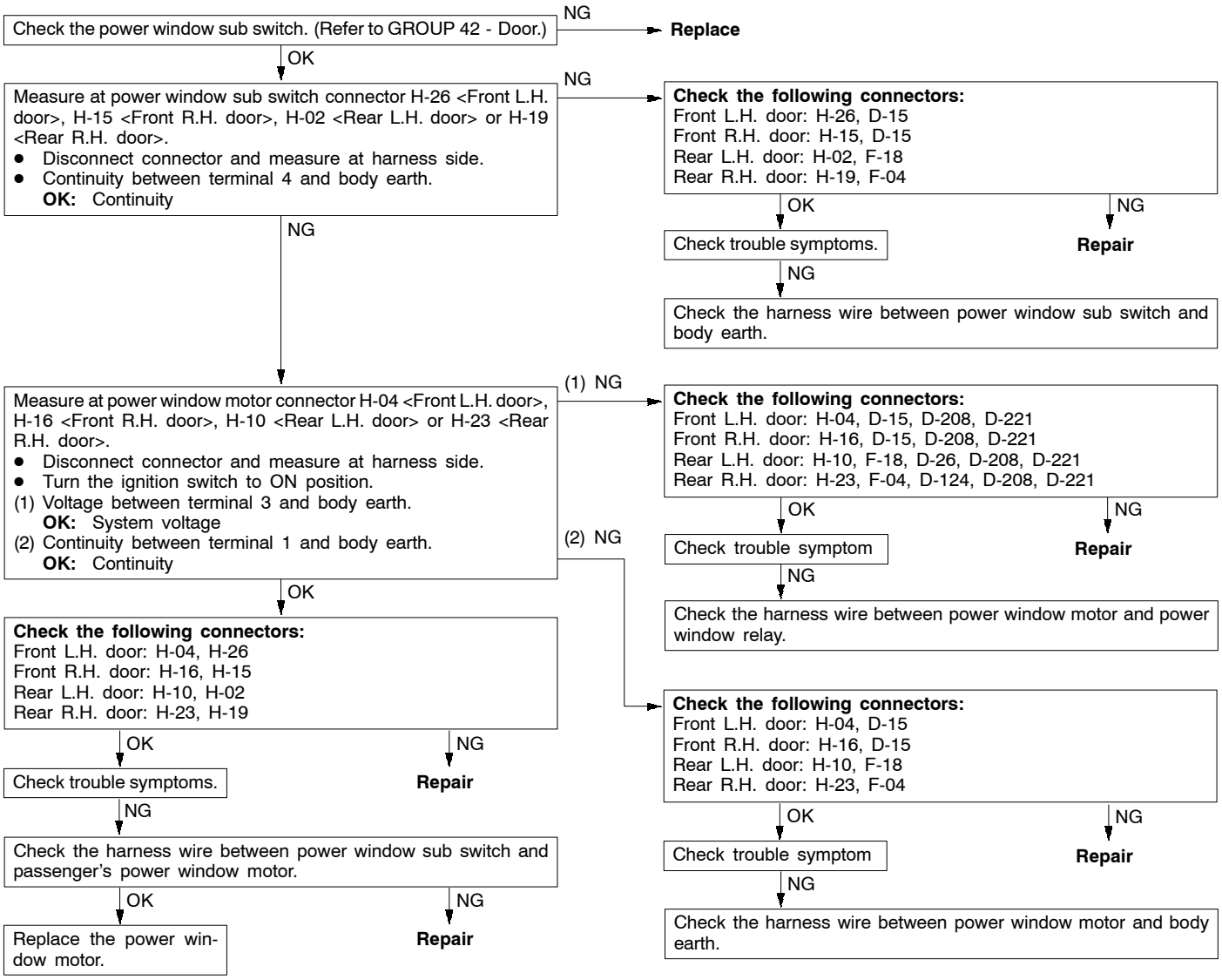


Purchased from www.WorkshopManuals.co.uk

www.WorkshopManuals.co.uk

## Inspection Procedure D-4

| Power window: Power window main switch can not operate front passenger's or rear window. | Probable cause |
|---|---|
| The cause is probably a malfunction of the power window main switch or front passenger's or rear power window motor, or an abnormality in the power supply circuit. | • Malfunction of power window main switch<br>• Malfunction of front passenger's or rear power window motor<br>• Malfunction of harness wire or connector |

Can the passenger's side power window be operated by the power window sub switch?
- No → Check the power window sub switch circuit. (Refer to P.54B-22, Inspection Procedure D-3.)
- Yes ↓

**MUT-II input signal check**
- Power window main switch

- NG → Check the power window main switch input circuit. (P.54B-51, Inspection Procedure P-16.)
- OK ↓

**Check the following connectors:**
Front L.H. door: H-05, D-25, D-31, D-15, H-04
Front R.H. door: H-05, D-25, D-31, D-15, H-16
Rear L.H. door: H-05, D-25, D-31, D-26, F-18, H-10
Rear R.H. door: H-05, D-25, D-31, D-124 F-04, H-23

- NG → **Repair**
- OK ↓

Check trouble symptoms.
- NG ↓

Check the harness wire between power window main switch and power window motor.
- NG → **Repair**
- OK ↓

Replace the power window motor. → Check trouble symptoms.
- NG ↓

Replace the power window main switch.

## Inspection Procedure D-5

| Power window: Power window timer function does not work normally. | Probable cause |
|---|---|
| The ETACS-ECU operates the power window timer function, based on the input signals from the following switches:<br>• Ignition switch (IG1)<br>• Driver's door switch<br>If the function does not work normally, a defect on the relevant circuit, power window main switch or the ETACS-ECU may be suspected. | • Malfunction of driver's door switch<br>• Malfunction of power window main switch<br>• Malfunction of ETACS-ECU<br>• Malfunction of harness wire or connector |

Is a diagnosis code output when the ignition switch is at the OFF (LOCK) position?
- Yes → Carry out troubleshooting while referring to the Diagnosis Code Chart on P.54B-9.
- No ↓

**MUT-II input signal check**
- Ignition switch (IG1)
- Driver's door switch
- Power window main switch

- NG → Check the defective input circuit. (Refer to P.54B-15, Defects Found by input Signal Check.)
- OK ↓

Replace the ETACS-ECU. → Check trouble symptoms.
- NG ↓

Replace the power window main switch.

Purchased from www.WorkshopManuals.co.uk

www.WorkshopManuals.co.uk

## Inspection Procedure D-6

| Power window: When the glass is raised, it then lowers automatically. | Probable cause |
|---|---|
| If the sliding resistance is too large when the glass is being raised, it is judged that something is jammed in the window, and the window is lowered by approximately 150 mm. | • Incorrect window glass adjustment<br>• Glass slider is incorrectly installed or warped<br>• Malfunction of power window motor |

Check the power window operating currant. (Refer to GROUP 42 – Door.)
- NG → Adjust the window glass. (Refer to GROUP 42 – Door.)
  - → Check trouble symptoms.
    - NG → Replace the window regulator assembly.
- OK → Replace the power window motor.

## Inspection Procedure D-7

| Power window: The glass is jammed in the window. | Probable cause |
|---|---|
| The cause may be a malfunction of the revolution detection sensor in the power window motor. | • Malfunction of power window motor |

Replace the power window motor.

## Inspection Procedure D-8

| Power window: When the glass is fully raised, it then lowers automatically. | Probable cause |
|---|---|
| The cause may be a malfunction of the revolution detection sensor in the power window motor. | • Malfunction of power window motor |

After disconnecting the battery terminals, set the limit switch. (Refer to GROUP 42 - Door.)
→ Check trouble symptoms.
- NG → Replace the power window motor.

## Inspection Procedure E-1

| Keyless entry system: Keyless entry system does not operate. | Probable cause |
|---|---|
| The ETACS-ECU operates the keyless entry system, based on the input signals from the following switches:<br>• Key reminder switch<br>• Door switches<br>• Driver's door lock actuator switch<br>• Transmitter<br>If the function does not work normally, a defect on the relevant circuit or the ETACS-ECU may be suspected. | • Malfunction of key reminder switch<br>• Malfunction of door switches<br>• Malfunction of driver's door lock actuator switch<br>• Malfunction of transmitter<br>• Malfunction of ETACS-ECU |

Purchased from www.WorkshopManuals.co.uk

www.WorkshopManuals.co.uk

Is the central door locking system operated normally?
- No → Check the central door locking system. (Refer to P54B-13, Trouble Symptom Chart.)
- Yes ↓

**MUT-II input signal check**
- Key reminder switch
- Door switches
- Driver's door lock actuator switch
- Transmitter

- NG → Check the defective input circuit. (Refer to P.54B-15, Defects Found by input Signal Check.)
- OK ↓

Replace the ETACS-ECU.

## Inspection Procedure E-2

| Keyless entry system: The room lamp and hazard warning lamps do not operate through the answerback function. | Probable cause |
|---|---|
| The hazard warning lamp answerback function can be selected by the driver's desire (can be deactivated). However, the room lamp answerback function can not be deactivated. if all of these device do not operate through the answerback function, the ETACS-ECU may be defective. | • Malfunction of turn-signal lamp<br>• Malfunction of room lamp<br>• Malfunction of ETACS-ECU<br>• Malfunction of harness wire or connector |

Activate the answerback functions. (Refer to GROUP 42 – Keyless Entry System or P.54B-60.) ↓

Check trouble symptoms. ↓

Are the room lamp and hazard warning lamps operated normally?
- No → Check the defective device. (Refer to P.54B-13, Trouble Symptom Chart.)
- Yes ↓

Replace the ETACS-ECU.

## Inspection Procedure E-3

| Keyless entry system: The encrypted code cannot be registered. | Probable cause |
|---|---|
| The ETACS-ECU actives the encrypted code register mode according to the following switch signals.<br>• Key reminder switch<br>• Hazard warning lamp switch<br>If the encrypted code register mode is not set, the relevant input signal circuit or the ETACS-ECU may be defective.<br>If a transmitter can not be registered although the encrypted code register mode is set, the transmitter or the ETACS-ECU may be defective. | • Malfunction of key reminder switch<br>• Malfunction of hazard warning lamp switch<br>• Malfunction of transmitter<br>• Malfunction of ETACS-ECU<br>• Malfunction of harness wire or connector |

Is encrypted code register mode set?
- Yes → Check the transmitter battery. (Refer to GROUP 42 - Keyless Entry System.)
  - OK → Replace the transmitter.
  - NG → **Repair**
- No ↓

**MUT-II input signal check**
- Key reminder switch
- Hazard warning lamp switch

- NG → Check the defective input circuit. (Refer to P.54B-15, Defects Found by input Signal Check.)
- OK ↓

Replace the ETACS-ECU.

Purchased from www.WorkshopManuals.co.uk

www.WorkshopManuals.co.uk

## Inspection Procedure F-1

| Sunroof: Sunroof does not work at all. | Probable cause |
|---|---|
| The power supply circuit of the sunroof motor assembly, the sunroof switch ground circuit, or the sunroof motor assembly may be defective. | • Malfunction of sunroof switch<br>• Malfunction of sunroof motor assembly<br>• Malfunction of harness wire or connector |

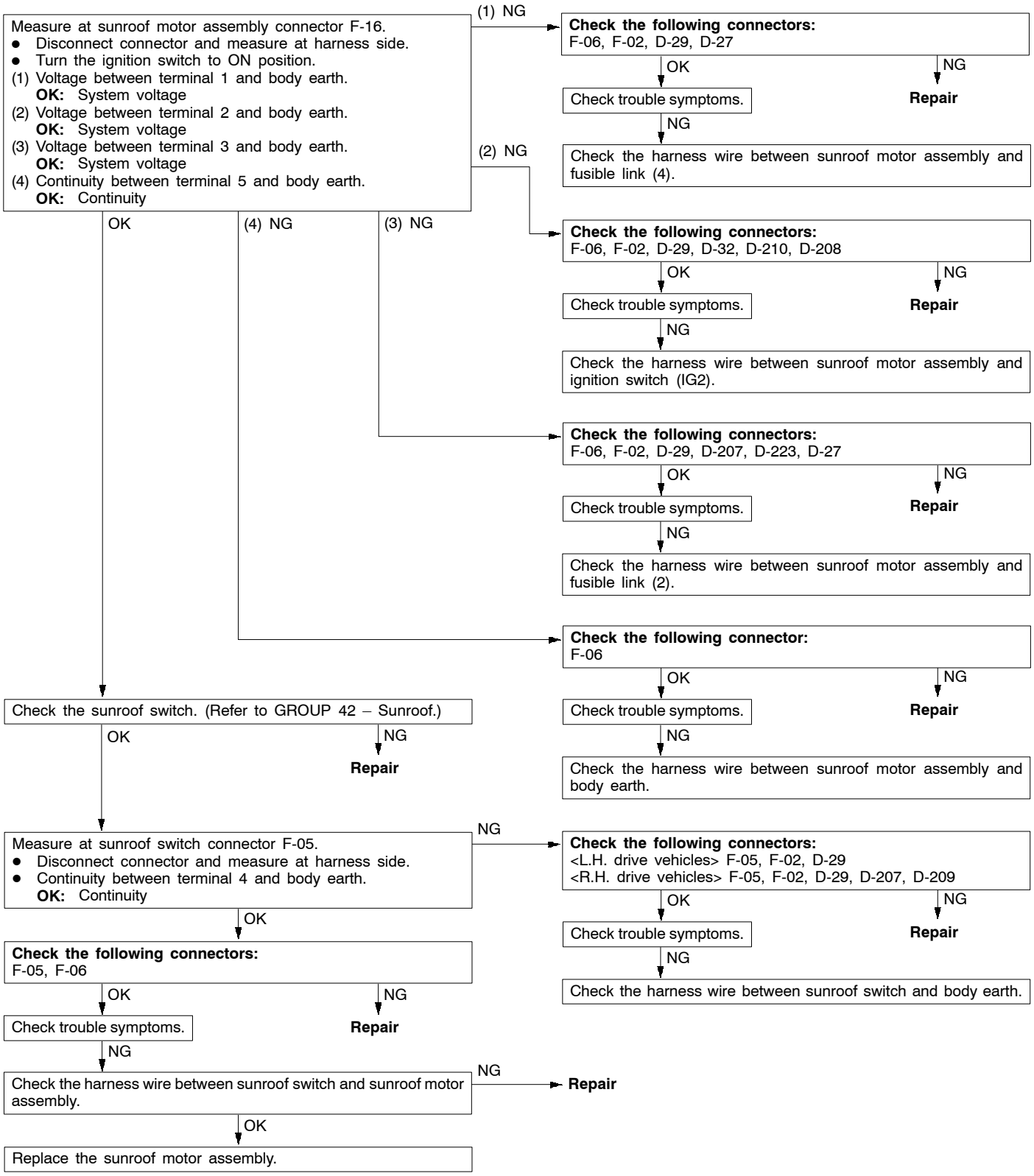


Purchased from www.WorkshopManuals.co.uk

www.WorkshopManuals.co.uk

## Inspection Procedure F-2

| Sunroof: Sunroof timer function does not work normally. | Probable cause |
|---|---|
| The sunroof motor assembly operates the sunroof timer function, based on the input signals from the following switches:<br>● Ignition switch (IG1)<br>● Driver's door switch<br>If the function does not work normally, a defect on the relevant circuit, sunroof motor assembly or the ETACS-ECU may be suspected. | ● Malfunction of driver's door switch<br>● Malfunction of sunroof motor assembly<br>● Malfunction of ETACS-ECU<br>● Malfunction of harness wire or connector |

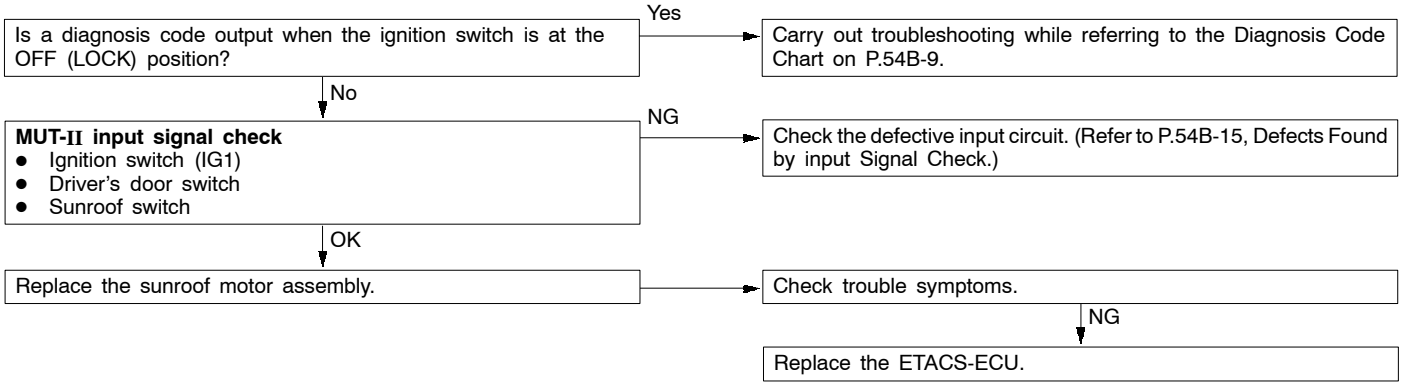


## Inspection Procedure F-3

| Sunroof: Safety mechanism does not work normally. | Probable cause |
|---|---|
| The sunroof motor assembly monitors load condition according to the current, which runs in the motor. If a predetermined current is exceeded, the sunroof motor reverses due to safety mechanism. If the sunroof motor does not reverse when an excessive load is applied, the sunroof motor assembly may be defective. | ● Malfunction of sunroof motor assembly |

Replace the sunroof motor assembly.

Purchased from www.WorkshopManuals.co.uk

www.WorkshopManuals.co.uk

## Inspection Procedure G-1

| Windshield wiper and washer: Windshield wiper does not operate. | Probable cause |
|---|---|
| If the windshield wiper does not work at all, the windshield wiper motor, column switch or the front-ECU may be defective. | • Malfunction of windshield wiper motor<br>• Malfunction of column switch<br>• Malfunction of front-ECU<br>• Malfunction of harness wire or connector |

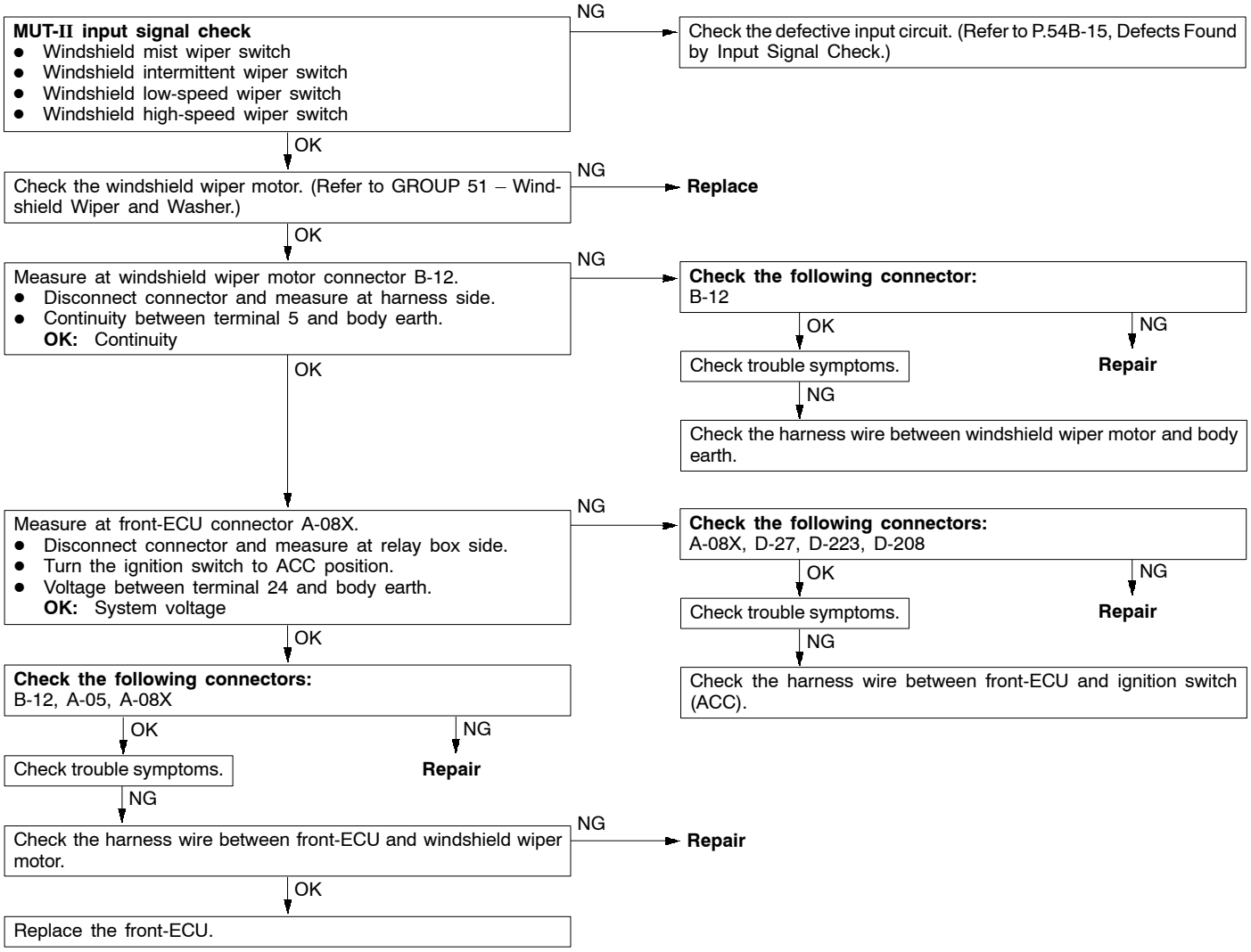


Purchased from www.WorkshopManuals.co.uk

www.WorkshopManuals.co.uk

## Inspection Procedure G-2

| Windshield wiper and washer: Any of the windshield wiper switch positions is defective. | Probable cause |
|---|---|
| The windshield wiper motor, column switch or the front-ECU may be defective. | • Malfunction of windshield wiper motor<br>• Malfunction of column switch<br>• Malfunction of front-ECU<br>• Malfunction of harness wire or connector |

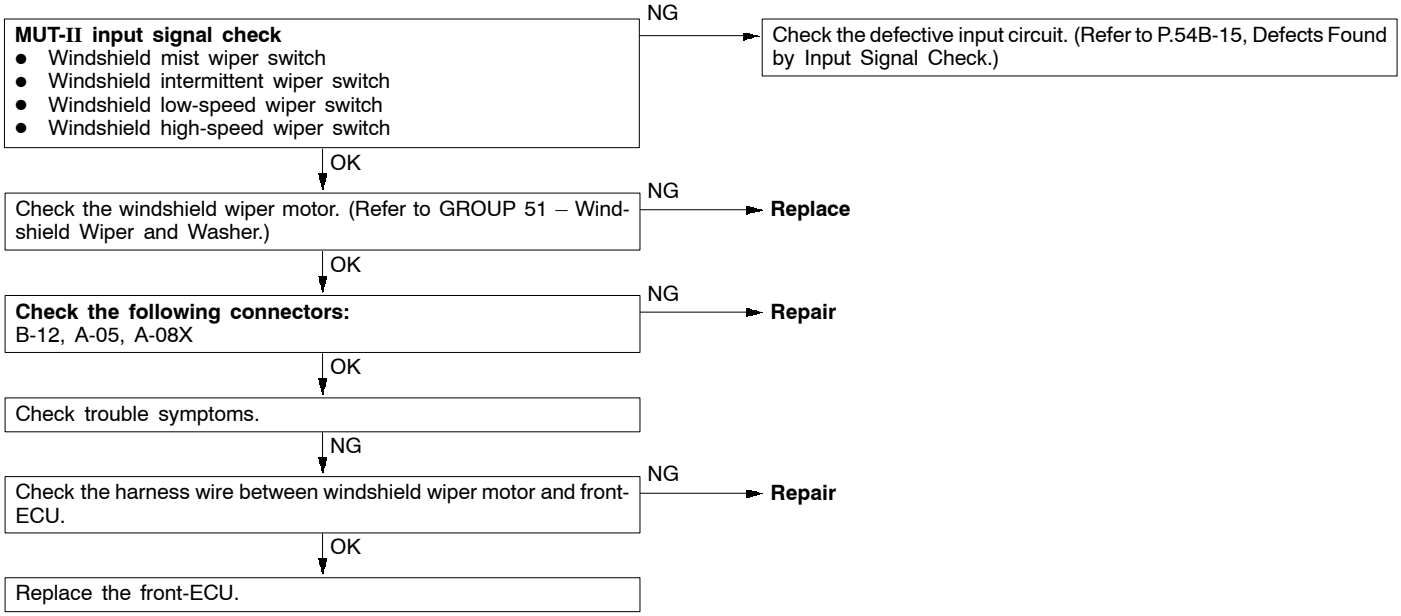


## Inspection Procedure G-3

| Windshield wiper and washer: Windshield wiper does not stop at the predetermined park position. | Probable cause |
|---|---|
| The windshield wiper motor or the front-ECU may be defective. | • Malfunction of windshield wiper motor<br>• Malfunction of front-ECU<br>• Malfunction of harness wire or connector |

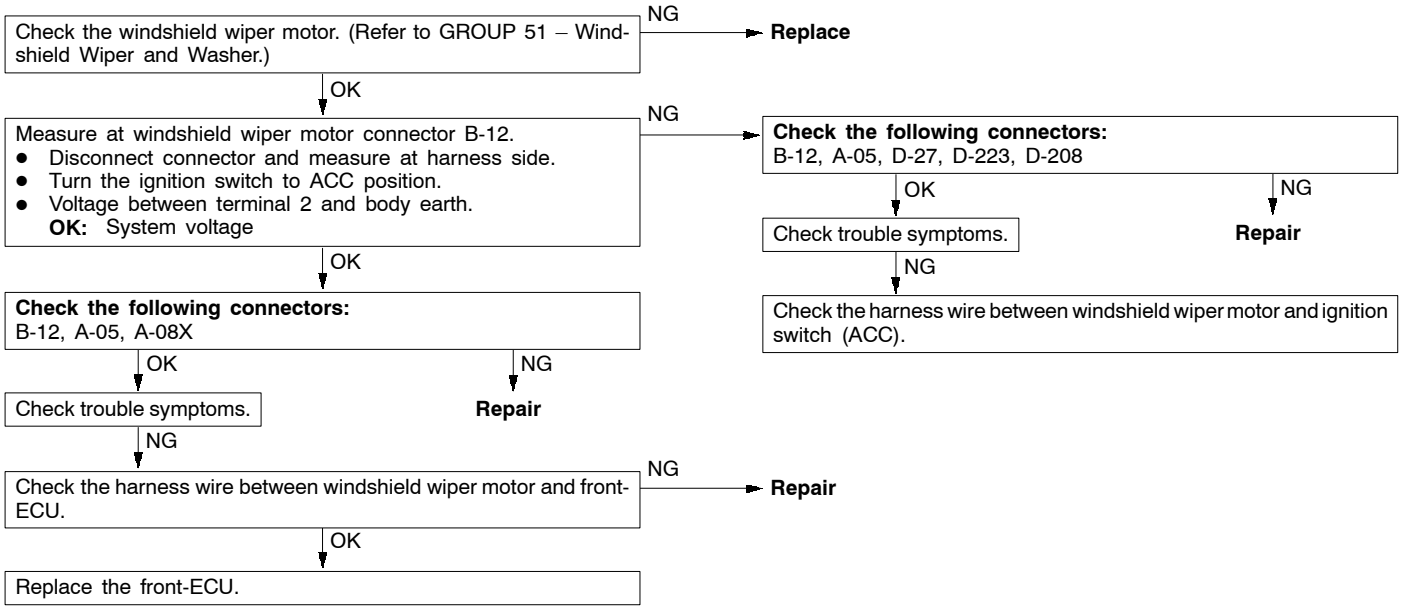


Purchased from www.WorkshopManuals.co.uk

www.WorkshopManuals.co.uk

## Inspection Procedure G-4

| Windshield wiper and washer: Windshield intermittent wiper interval cannot be adjusted. | Probable cause |
|---|---|
| The ETACS-ECU calculates the intermittent wiper interval, and sends a signal to the front-ECU through the SWS communication line. If the signal is defective, the front-ECU will ignore the signal and set the intermittent wiper interval to 4 seconds. | • Malfunction of column switch<br>• Malfunction of front-ECU<br>• Malfunction of ETACS-ECU<br>• Malfunction of harness wire or connector |

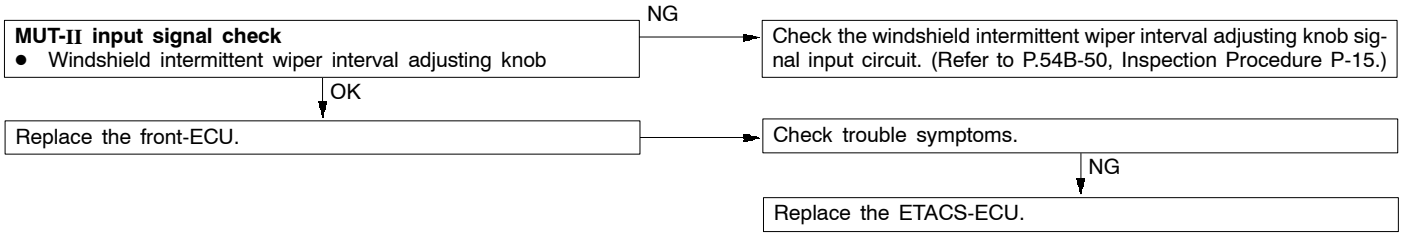


## Inspection Procedure G-5

| Windshield wiper and washer: Windshield washer does not work. | Probable cause |
|---|---|
| The windshield washer motor, the column switch or the front-ECU may be defective. | • Malfunction of windshield washer motor<br>• Malfunction of column switch<br>• Malfunction of front-ECU<br>• Malfunction of harness wire or connector |

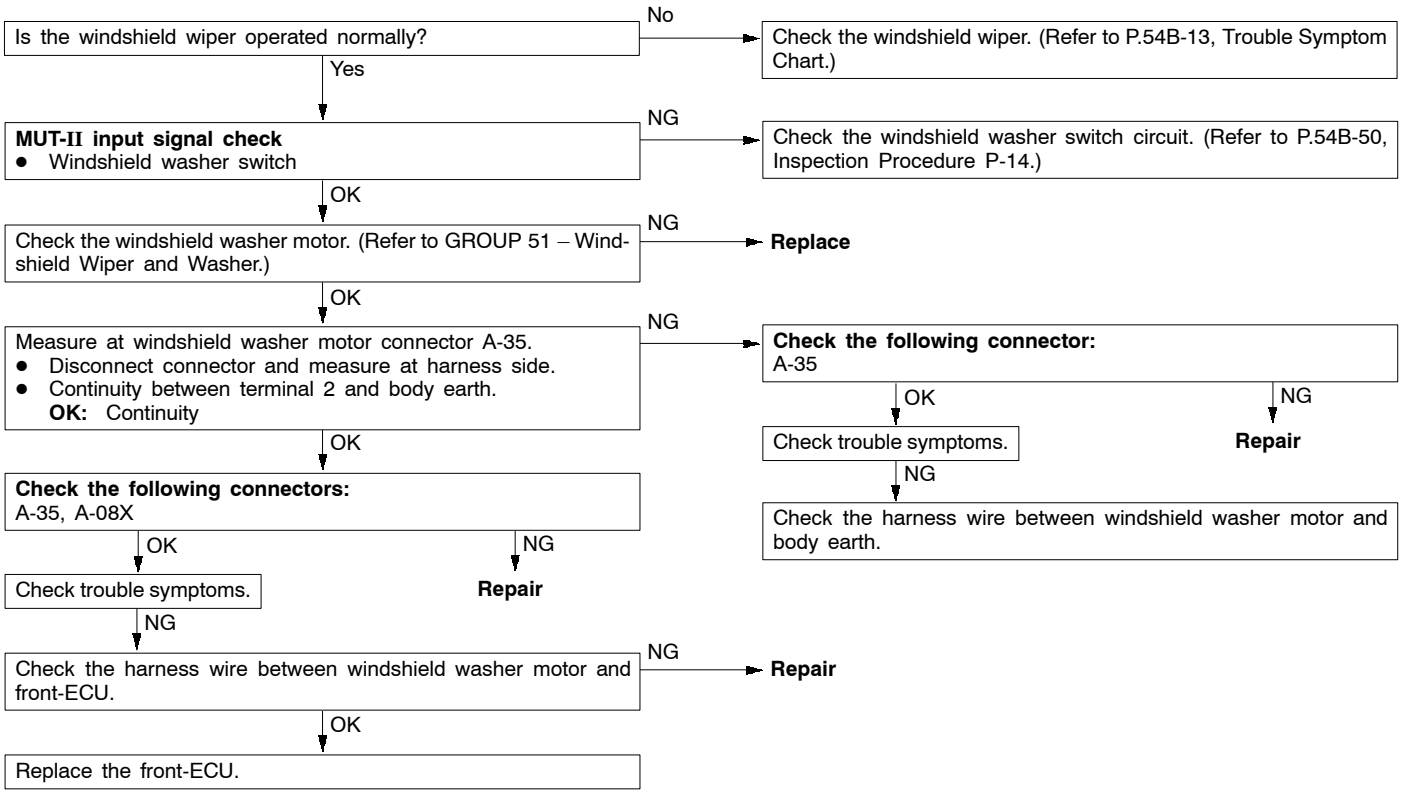


Purchased from www.WorkshopManuals.co.uk

www.WorkshopManuals.co.uk

## Inspection Procedure H-1

| Rear wiper and washer: Rear wiper does not work normally. | Probable cause |
|---|---|
| The ETACS-ECU operates the rear wiper according to the input signals from the following switches:<br>● Ignition switch (ACC)<br>● Rear wiper switch<br>If the rear wiper does not work normally, the relevant input signal circuit, the rear wiper motor, the column switch or the ETACS-ECU may be defective. | ● Malfunction of rear wiper motor<br>● Malfunction of column switch<br>● Malfunction of front-ECU<br>● Malfunction of harness wire or connector |

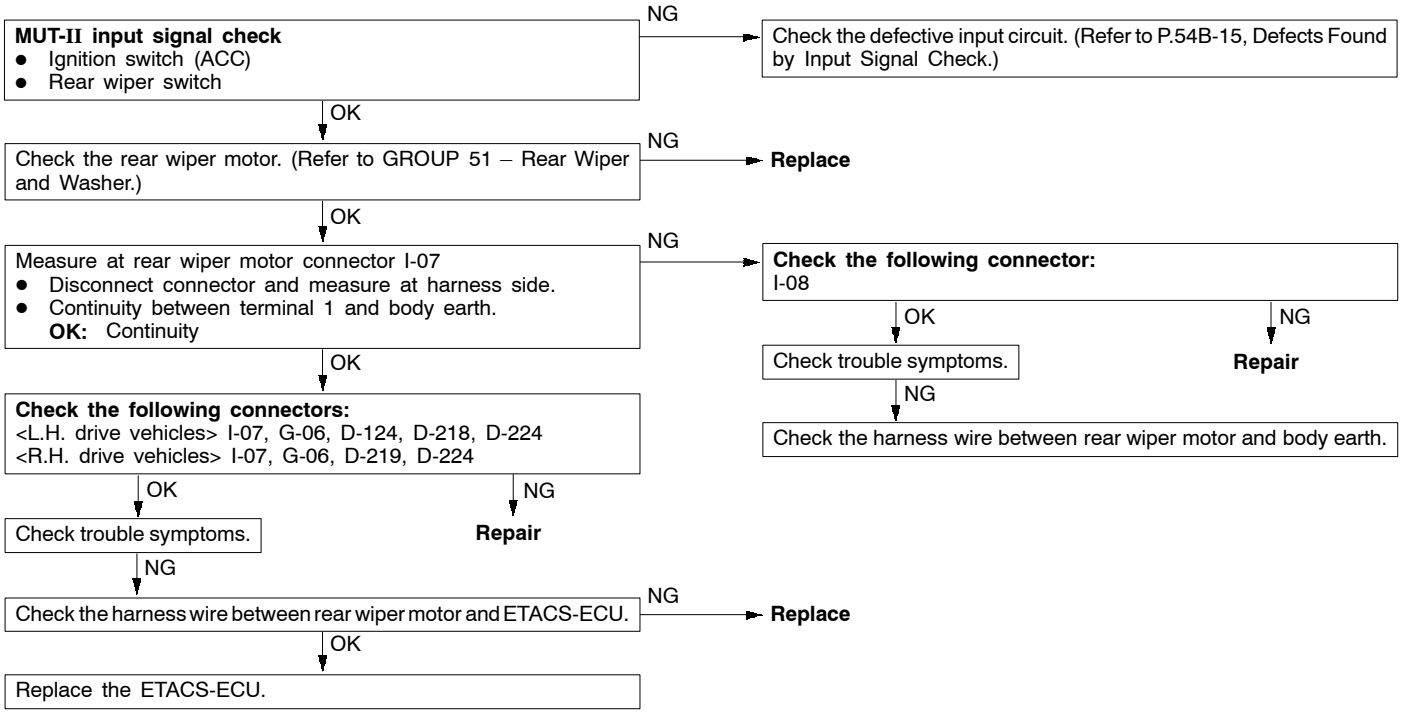


## Inspection Procedure H-2

| Rear wiper and washer: Rear wiper does not stop at the predetermined park position. | Probable cause |
|---|---|
| The rear wiper motor or the ETACS-ECU may be defective. | ● Malfunction of rear wiper motor<br>● Malfunction of front-ECU<br>● Malfunction of harness wire or connector |

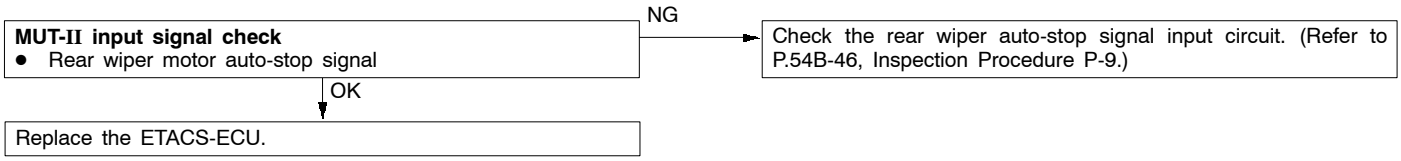


Purchased from www.WorkshopManuals.co.uk

www.WorkshopManuals.co.uk

## Inspection Procedure H-3

| Rear wiper and washer: When the shift lever <M/T> or selector lever <A/T> is moved to R position during the rear wiper operation, the rear wiper does not operate at the continuous mode. | Probable cause |
|---|---|
| The ETACS-ECU operates the rear wiper consecutively twice when the shift lever <M/T> or selector lever <A/T> is moved to R position while the rear wiper is turned on. If the rear wiper does not work consecutively twice, the back-up lamp switch <M/T> or the inhibitor switch (reverse) <A/T> may be defective. | • Malfunction of back-up lamp switch<br>• Malfunction of inhibitor switch<br>• Malfunction of ETACS-ECU<br>• Malfunction of harness wire or connector |

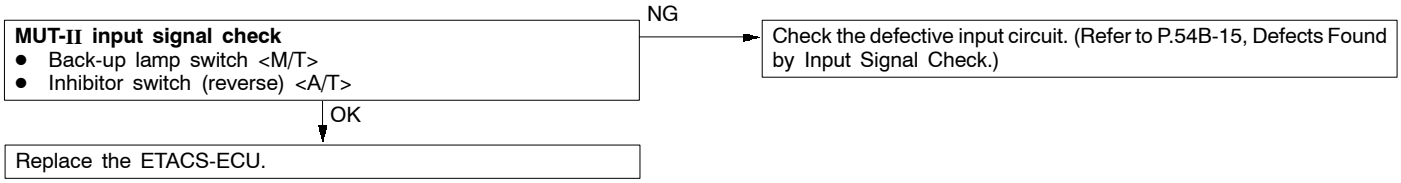


## Inspection Procedure H-4

| Rear wiper and washer: Rear washer does not work. | Probable cause |
|---|---|
| The rear washer motor, the column switch or the ETACS-ECU may be defective. | • Malfunction of rear washer motor<br>• Malfunction of column switch<br>• Malfunction of ETACS-ECU<br>• Malfunction of harness wire or connector |

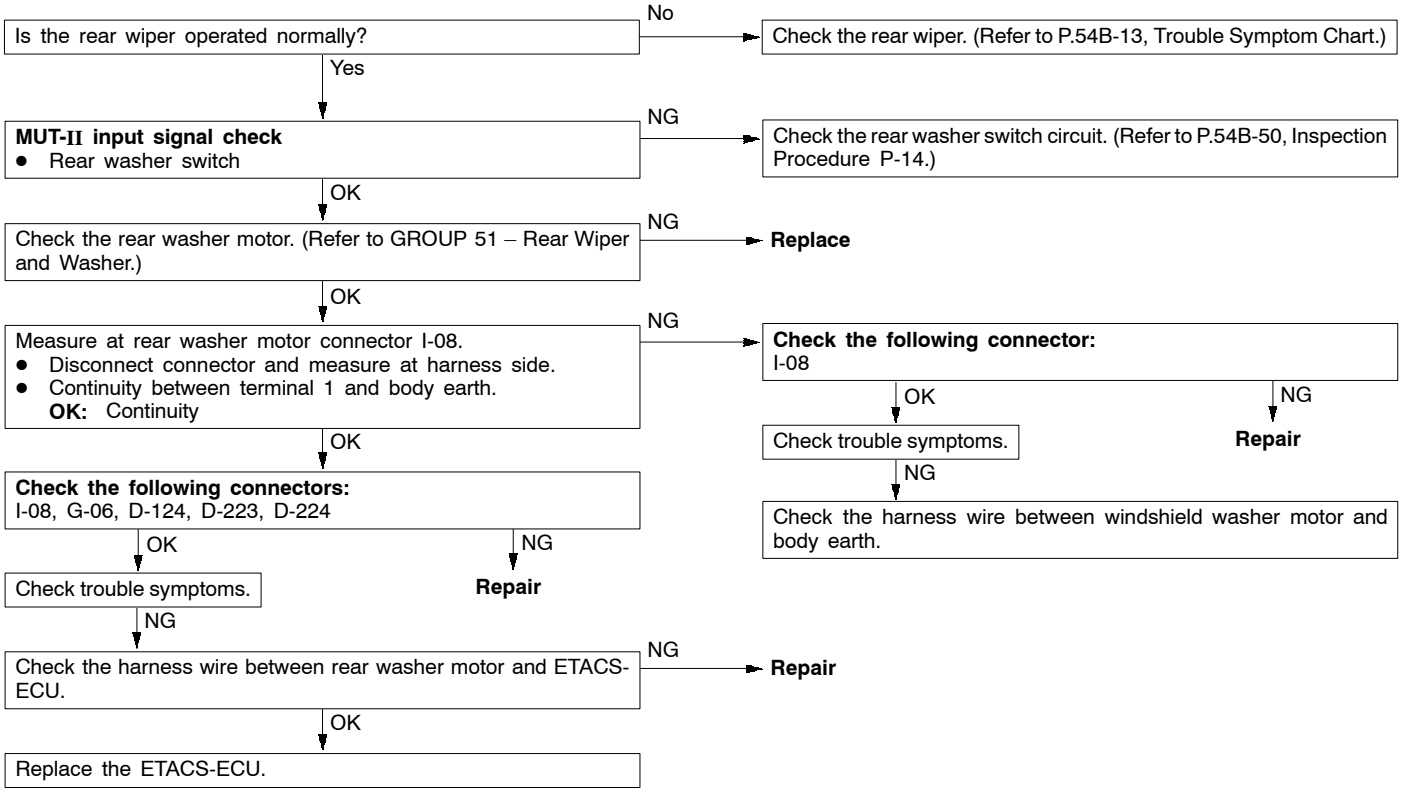


Purchased from www.WorkshopManuals.co.uk

www.WorkshopManuals.co.uk

## Inspection Procedure I-1

| Headlamp washer: Headlamp washer does not work. | Probable cause |
|---|---|
| The front-ECU operates the headlamp washers if the headlamp washer switch is turned to ON while the headlamp relays (low and high) are ON and the ignition switch is at the ACC or ON position.<br>If the headlamp washer does not work normally, the headlamp washer motor, the column switch or the front-ECU may be defective. | • Malfunction of headlamp washer motor<br>• Malfunction of column switch<br>• Malfunction of front-ECU<br>• Malfunction of harness wire or connector |

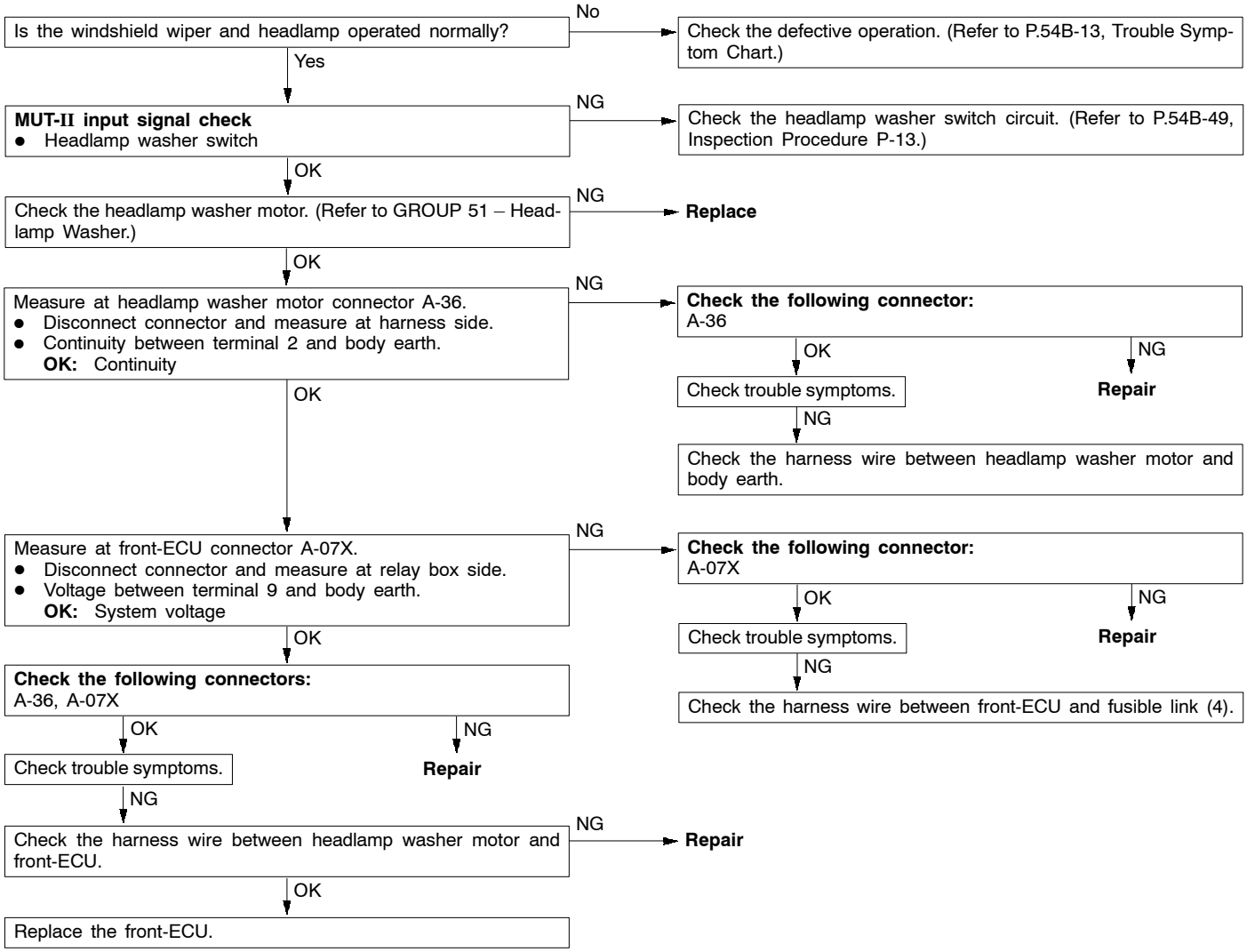


Purchased from www.WorkshopManuals.co.uk

www.WorkshopManuals.co.uk

## Inspection Procedure J-1

| Ignition key hole illumination lamp: Ignition key hole illumination lamp does not work normally. | Probable cause |
|---|---|
| The ETACS-ECU operates the ignition key hole illumination lamp operation, based on input signals from the following switches:<br>● Ignition switch (IG1)<br>● Key reminder switch <Vehicles with keyless entry system><br>● Driver's door switch<br>If the ignition key hole illumination lamp does not work normally, the relevant input signal circuit, the combination meter or the ETACS-ECU may be defective. | ● Malfunction of key reminder switch <Vehicles with keyless entry system><br>● Malfunction of driver's door switch<br>● Malfunction of combination meter<br>● Malfunction of ETACS-ECU<br>● Malfunction of harness wire or connector |

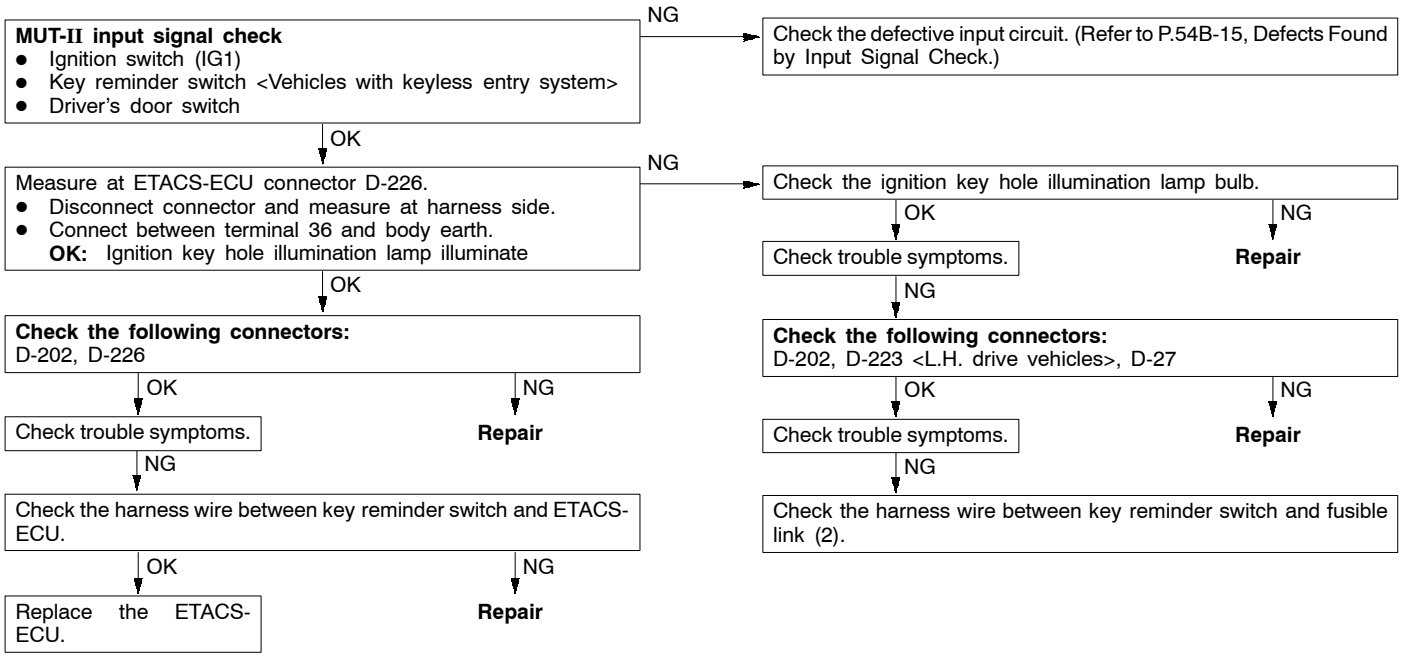


## Inspection Procedure K-1

| Headlamp, tail lamp: Tail lamp do not illuminate. | Probable cause |
|---|---|
| The column switch or the front-ECU may be defective. | ● Malfunction of column switch<br>● Malfunction of front-ECU<br>● Malfunction of harness wire or connector |

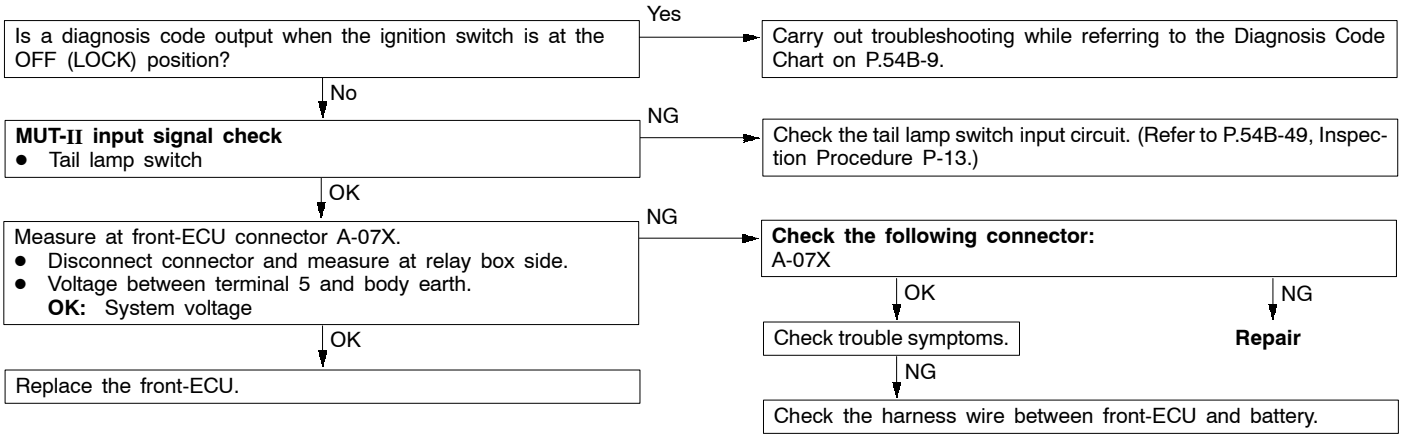


NOTE
If only one lamp does not illuminate, the harness wire between the lamp and front-ECU may be defective or the light bulb may be burned out. In this case, check the tail lamp circuit

Purchased from www.WorkshopManuals.co.uk

www.WorkshopManuals.co.uk

## Inspection Procedure K-2

| Headlamp, tail lamp: Headlamps (low-beam) do not illuminate. | Probable cause |
|---|---|
| The column switch or the front-ECU may be defective. | • Malfunction of column switch<br>• Malfunction of front-ECU<br>• Malfunction of harness wire or connector |

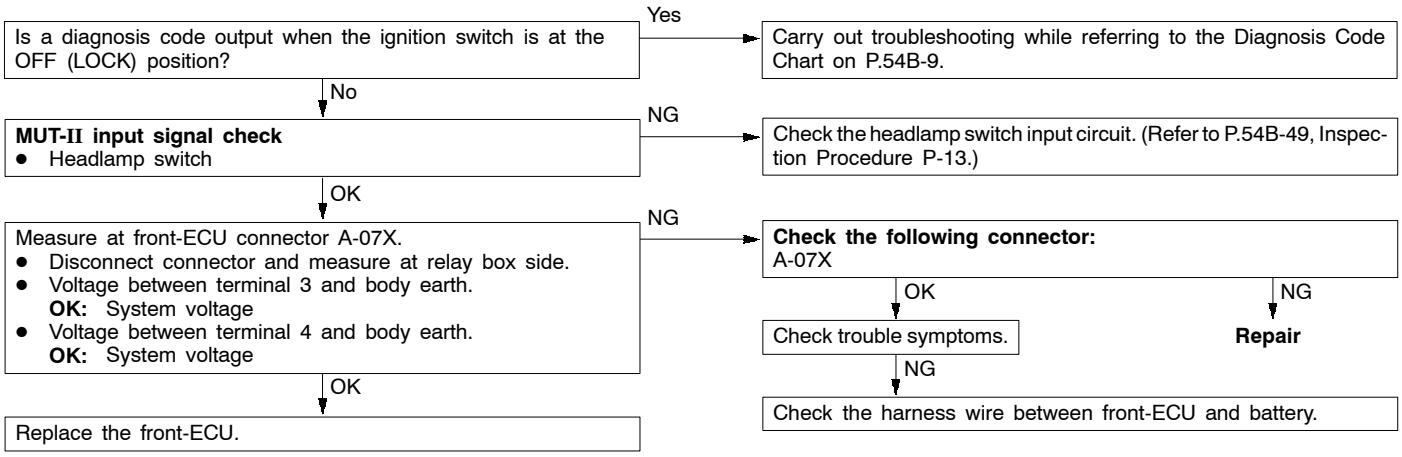


NOTE
If only one of the headlamps (low-beam) does not illuminate, the harness wire between the headlamp and front-ECU may be defective or the headlamp bulb may be burned out. In this case, check the headlamp circuit.

## Inspection Procedure K-3

| Headlamp, tail lamp: Headlamps (high-beam) do not illuminate. | Probable cause |
|---|---|
| The column switch or the front-ECU is suspected to be defective. | • Malfunction of column switch<br>• Malfunction of front-ECU<br>• Malfunction of harness wire or connector |

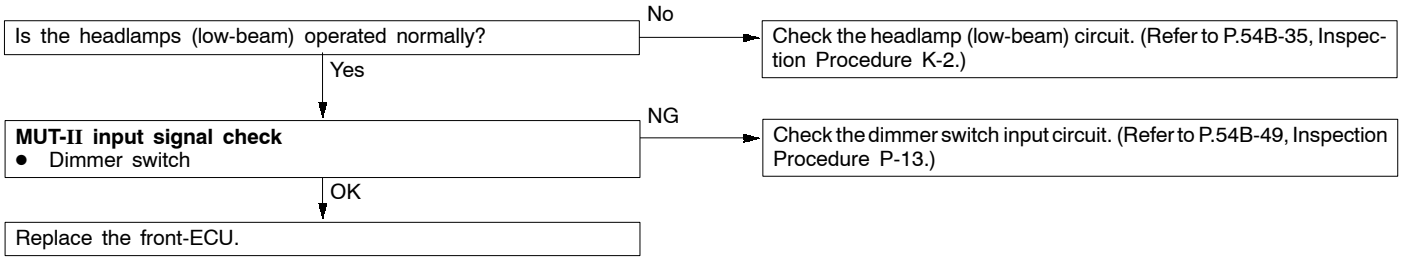


NOTE
If only one of the headlamps (high-beam) does not illuminate, the harness wire between the headlamp and front-ECU may be defective or the headlamp bulb may be burned out. In this case, check the headlamp circuit.

Purchased from www.WorkshopManuals.co.uk

www.WorkshopManuals.co.uk

## Inspection Procedure K-4

| Headlamp, tail lamp: Headlamps do not illuminate when the passing switch is operated. | Probable cause |
|---|---|
| If the headlamps (low-beam and high-beam) are defective, the column switch or the front-ECU is suspected to be defective. | • Malfunction of column switch<br>• Malfunction of front-ECU<br>• Malfunction of harness wire or connector |

Is the headlamps (low-beam and high-beam) operated normally?
- No → Check the defective circuit. (Refer to P.54B-13, Trouble Symptom Chart.)
- Yes ↓

**MUT-II input signal check**
- Passing switch

- NG → Check the passing switch input circuit. (Refer to P.54B-49, Inspection Procedure P-13.)
- OK ↓

Replace the front-ECU.

## Inspection Procedure K-5

| Headlamp, tail lamp: The headlamp automatic shutdown function does not work normally. | Probable cause |
|---|---|
| The ETACS-ECU operates the headlamp automatic shutdown function, based on the signals from the following switches<br>• Ignition switch (IG1)<br>• Driver's door switch<br>• Headlamp switch<br>If the head lamp automatic shutdown function does work normally, a defect on relevant input circuits, the ETACS-ECU or the front-ECU is suspected. | • Malfunction of driver's door switch<br>• Malfunction of column switch.<br>• Malfunction of front-ECU<br>• Malfunction of harness wire or connector |

Is a diagnosis code output when the ignition switch is at the OFF (LOCK) position?
- Yes → Carry out troubleshooting while referring to the Diagnosis Code Chart on P.54B-9.
- No ↓

**MUT-II input signal check**
- Ignition switch (IG1)
- Driver's door
- Headlamp switch

- NG → Check the defective input circuit. (Refer to P.54B-15, Defects Found by Input Signal Check.)
- OK ↓

Replace the ETACS-ECU. → Check trouble symptoms.
- NG ↓

Replace the front-ECU.

Purchased from www.WorkshopManuals.co.uk

www.WorkshopManuals.co.uk

## Inspection Procedure K-6

| Headlamp, tail lamp: Headlamps dimmer switch automatic reset function does not work normally. | Probable cause |
|---|---|
| The headlamp dimmer switch automatic reset function is controlled by the front-ECU. If a defect appears, the front-ECU may be defective. | • Malfunction of front-ECU |

Replace the front-ECU.

## Inspection Procedure K-7

| Headlamp, tail lamp: Daytime running lamp (DRL) function does not work. | Probable cause |
|---|---|
| The headlamp dimmer switch auto-reset function is controlled by the front-ECU. If a defect appears, the front-ECU may be defective. | • Malfunction of ETACS-ECU<br>• Malfunction of front-ECU<br>• Malfunction of harness wire or connector. |

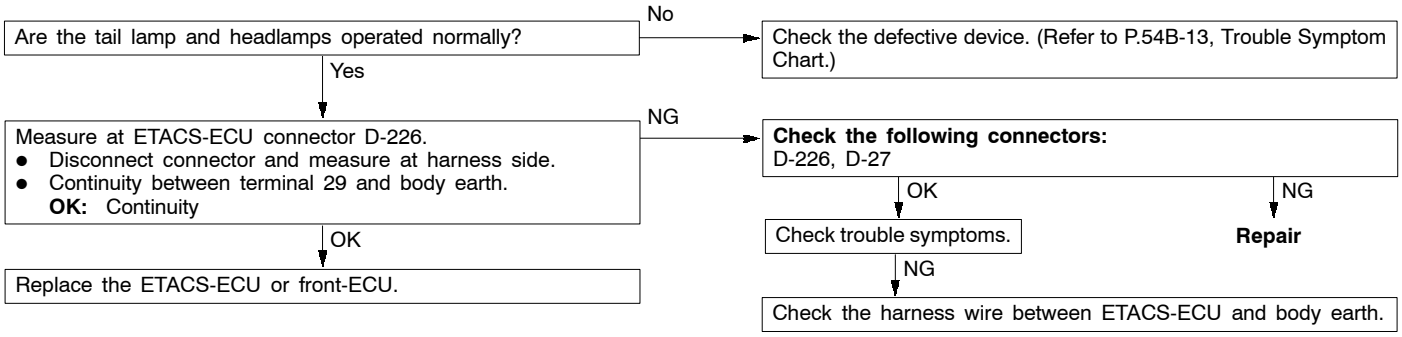


## Inspection Procedure L-1

| Flasher timer: Turn-signal lamp do not flash when the turn-signal lamp switch is turned on. | Probable cause |
|---|---|
| The ETACS-ECU makes the turn-signal lamps flash, based on the input signals from the following switches:<br>• Ignition switch (IG1)<br>• Turn-signal lamp switch<br>If the turn-signal lamps do not flash normally, a defect on the relevant circuits or the ETACS-ECU may be suspected.<br>If the hazard warning lamps also do not flash, a defect in the ETACS-ECU power supply line specific to the turn-signal lamps is suspected. | • Malfunction of column switch<br>• Malfunction of ETACS-ECU<br>• Malfunction of harness wire or connector. |

Purchased from www.WorkshopManuals.co.uk

www.WorkshopManuals.co.uk

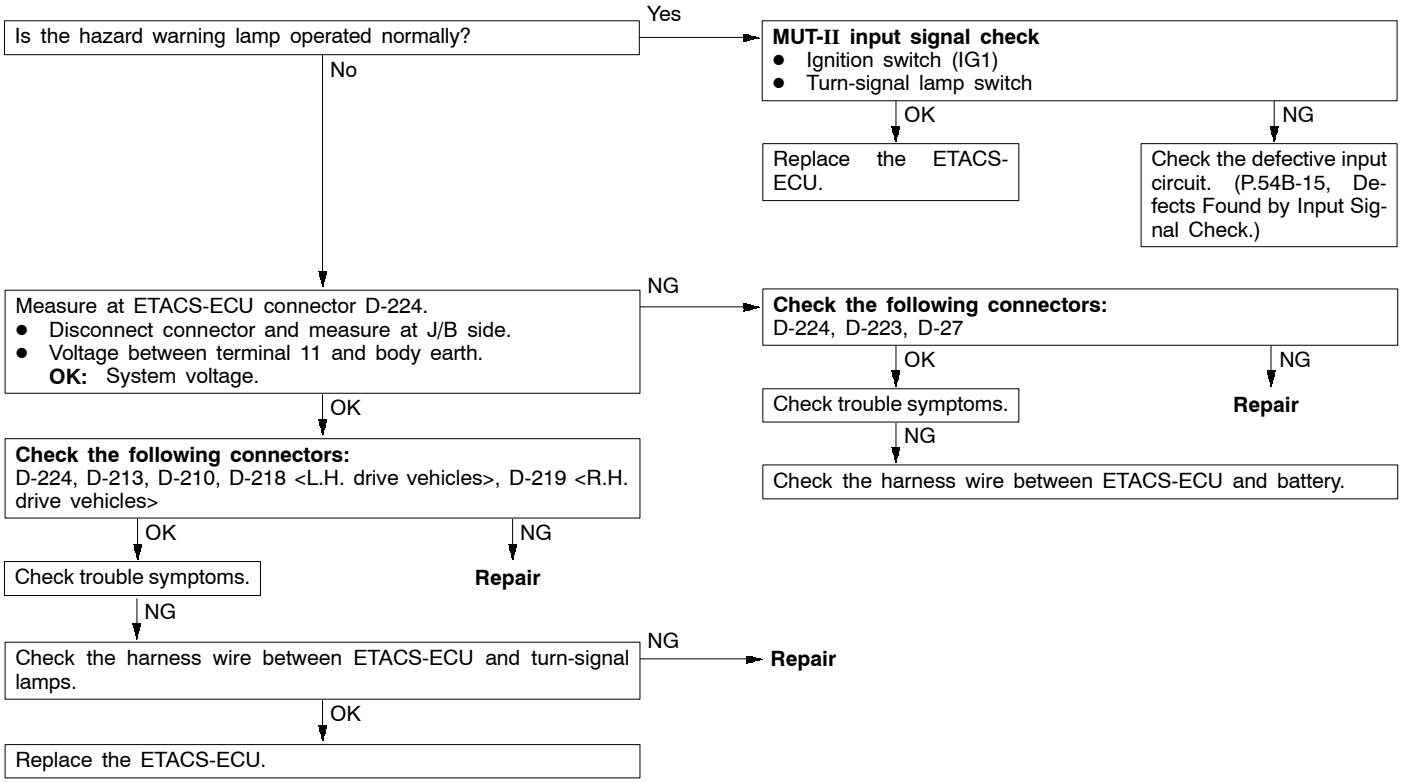


NOTE
If only one of the turn-signal lamp does not flash, the harness wire between the lamp and ETACS-ECU may be defective or the lamp bulb may be burned out. In this case, check the turn-signal lamp and hazard warning lamp circuit.

## Inspection Procedure L-2

| Flasher timer: Hazard warning lamp do not flash when the hazard warning lamp switch is turned on. | Probable cause |
|---|---|
| The ETACS-ECU makes the turn-signal lamps flash, base on the input signals from the hazard warning lamp switch.<br>If the turn-signal lamps do not flash normally, the hazard warning lamp switch input circuit or the ETACS-ECU may be defective. | ● Malfunction of hazard warning lamp switch<br>● Malfunction of ETACS-ECU<br>● Malfunction of harness wire or connector. |

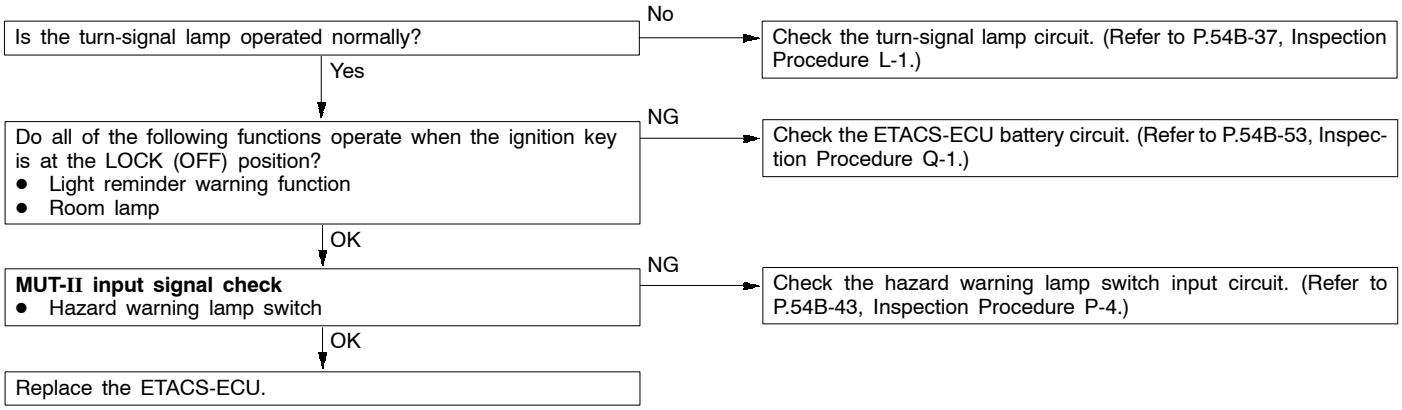


Purchased from www.WorkshopManuals.co.uk

www.WorkshopManuals.co.uk

## Inspection Procedure M-1

| Front fog lamp: Front fog lamps do not illuminate when the front fog lamp switch is turned on. | Probable cause |
|---|---|
| If the tail lamps and headlamps illuminate normally, the front fog lamp switch, the front fog lamp relay, the front-ECU or the ETACS-ECU may be defective. | • Malfunction of front fog lamp switch<br>• Malfunction of front fog lamp relay<br>• Malfunction of front-ECU<br>• Malfunction of ETACS-ECU<br>• Malfunction of harness wire or connector. |

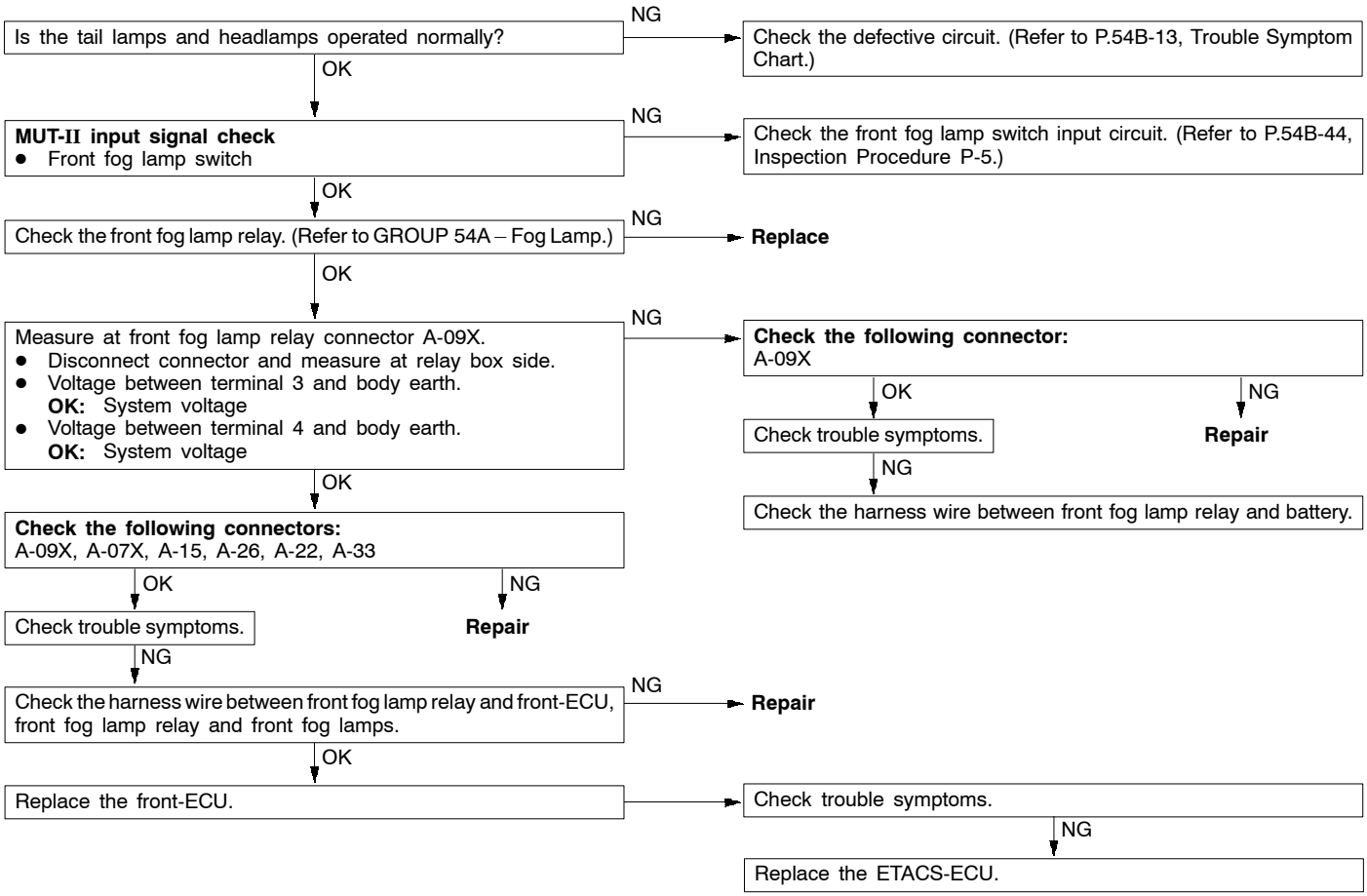


NOTE
If only one of the front fog lamp or front fog lamp indicator lamp does not illuminate, the harness wire between the lamp and front fog lamp relay may be defective or the lamp bulb may be burned out. In this case, check the front fog lamp circuit.

## Inspection Procedure M-2

| Front fog lamp: Front fog lamp do not go out when the tail lamps are turned off while the fog lamps are on. | Probable cause |
|---|---|
| If the malfunction above occurs, the ETACS-ECU may be defective. | • Malfunction of ETACS-ECU |

Replace the ETACS-ECU.

Purchased from www.WorkshopManuals.co.uk

www.WorkshopManuals.co.uk

## Inspection Procedure N-1

| Rear fog lamp: Rear fog lamps do not illuminate when the rear fog lamp switch is turned on. | Probable cause |
|---|---|
| If the headlamps and rear fog lamps illuminate normally, the rear fog lamp switch, the rear fog lamp relay or the ETACS-ECU may be defective. | • Malfunction of rear fog lamp switch<br>• Malfunction of rear fog lamp relay<br>• Malfunction of ETACS-ECU<br>• Malfunction of harness wire or connector. |

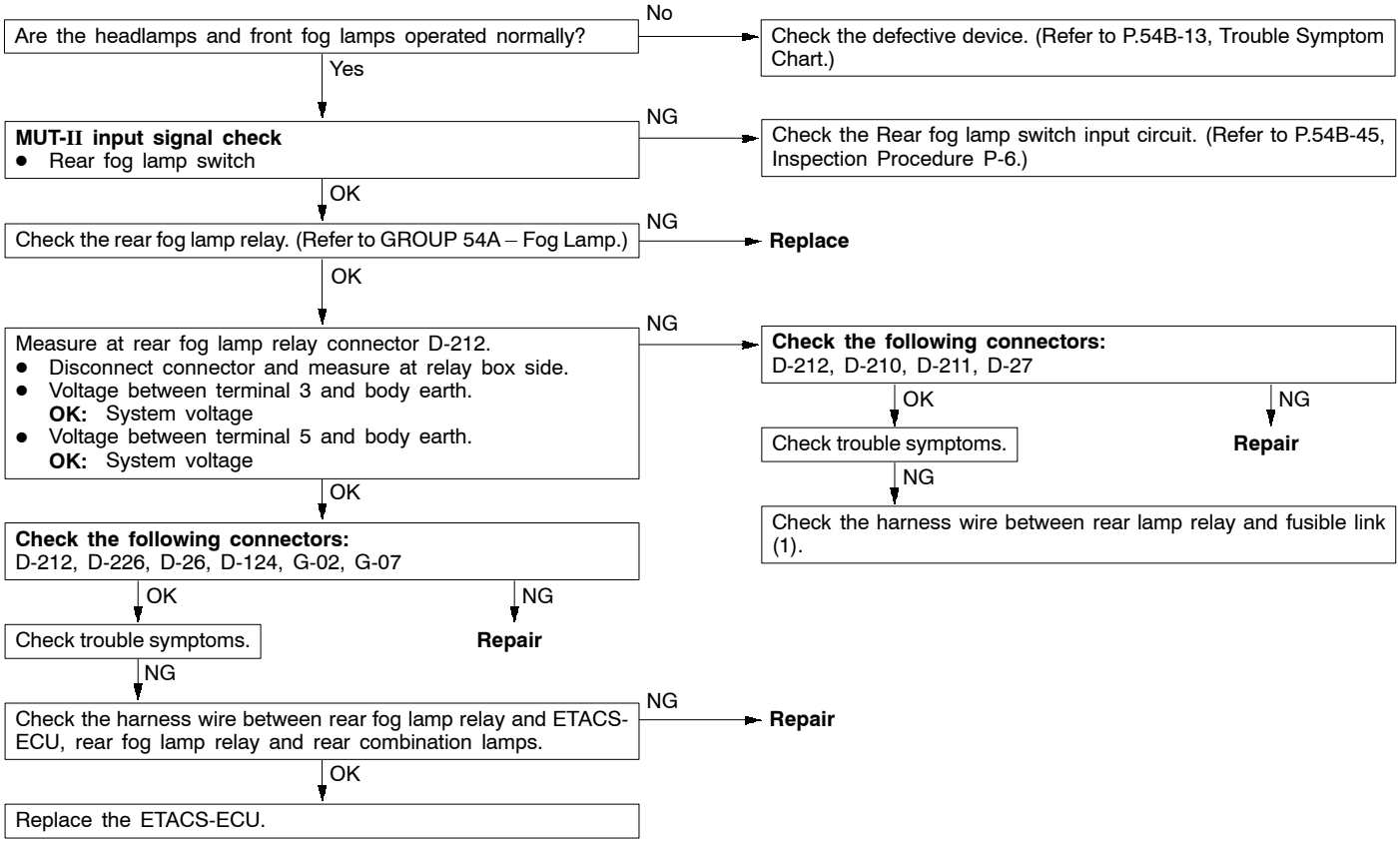


NOTE
If only one of the rear fog lamp or rear fog lamp indicator lamp does not illuminate, the harness wire between the lamp and rear fog lamp relay may be defective or the lamp bulb may be burned out. In this case, check the rear fog lamp circuit.

## Inspection Procedure N-2

| Rear fog lamp: Rear fog lamp do not go out when the headlamps and front fog lamps are turned off while the fog lamps are on. | Probable cause |
|---|---|
| If the malfunction above occurs, the ETACS-ECU may be defective. | • Malfunction of ETACS-ECU |

Replace the ETACS-ECU.

Purchased from www.WorkshopManuals.co.uk

www.WorkshopManuals.co.uk

## Inspection Procedure O-1

| Room lamp: Room lamp does not illuminate. | Probable cause |
|---|---|
| If the room lamp does not illuminate at all, the room lamp bulb may be burned out, or the power supply circuit or the ETACS-ECU may be defective. | • Malfunction of room lamp<br>• Malfunction of ETACS-ECU<br>• Malfunction of harness wire or connector |

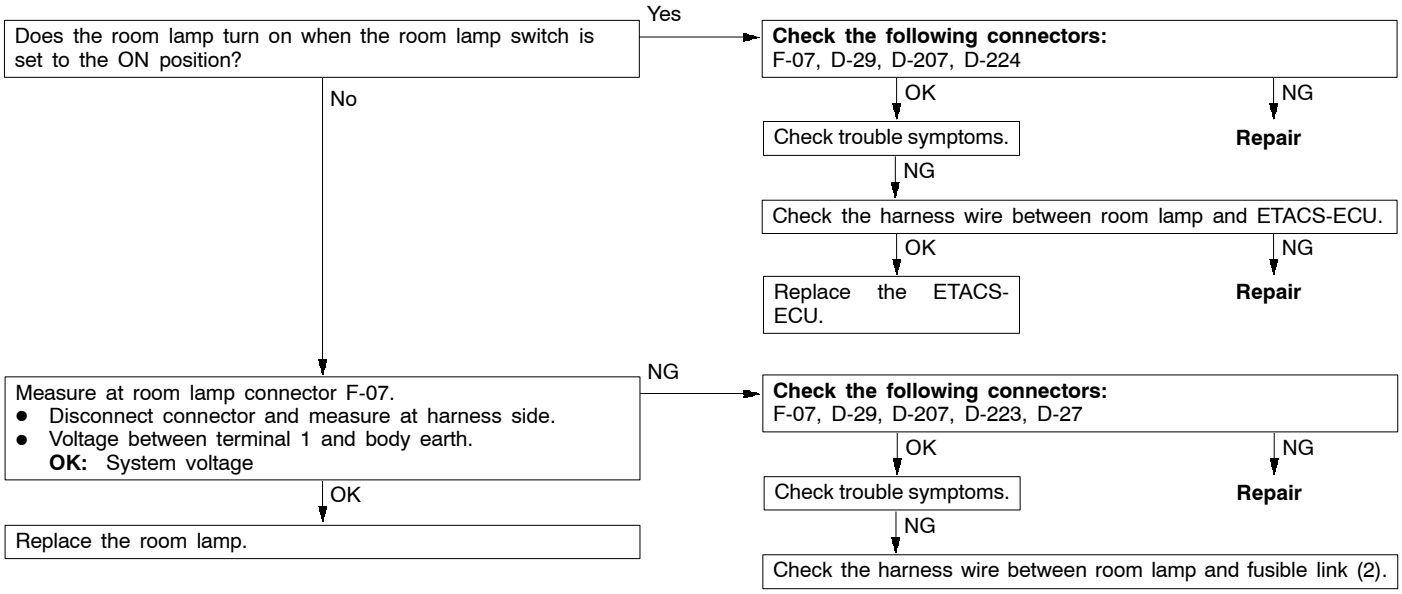


## Inspection Procedure O-2

| Room lamp: Room lamp dimming function does not work normally. | Probable cause |
|---|---|
| The ETACS-ECU dims the room lamp according to the input signals from the following switches:<br>• Ignition switch (IG1)<br>• Key reminder switch<br>• Door switches<br>• Driver's door lock actuator switch<br>If the room lamp does not be dimmed normally, the relevant input signal circuit or the ETACS-ECU may be defective. | • Malfunction of key reminder switch<br>• Malfunction of driver's door switch<br>• Malfunction of door switches<br>• Malfunction of driver's door lock actuator switch<br>• Malfunction of ETACS-ECU<br>• Malfunction of harness wire or connector |

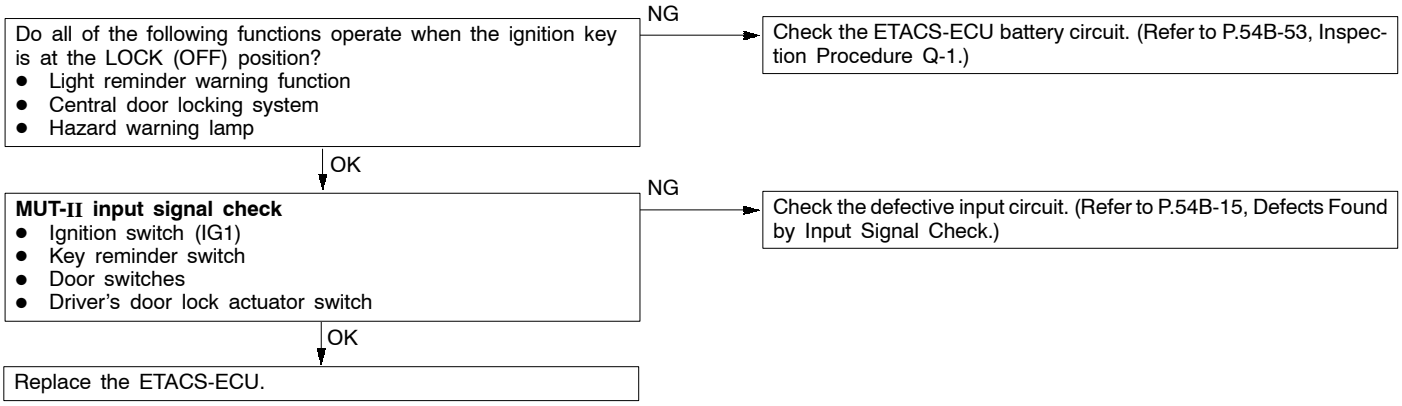


Purchased from www.WorkshopManuals.co.uk

www.WorkshopManuals.co.uk

## Inspection Procedure P-1

| Ignition switch (ACC) signal is not sent to the ETACS-ECU. | Probable cause |
|---|---|
| The ignition switch (ACC) input signal is used to operate the following devices. If the signal fails, these devices will not work normally.<br>● Windshield wiper and washer<br>● Rear wiper and washer<br>● Headlamp washer | ● Malfunction of ETACS-ECU<br>● Malfunction of harness wire or connector |

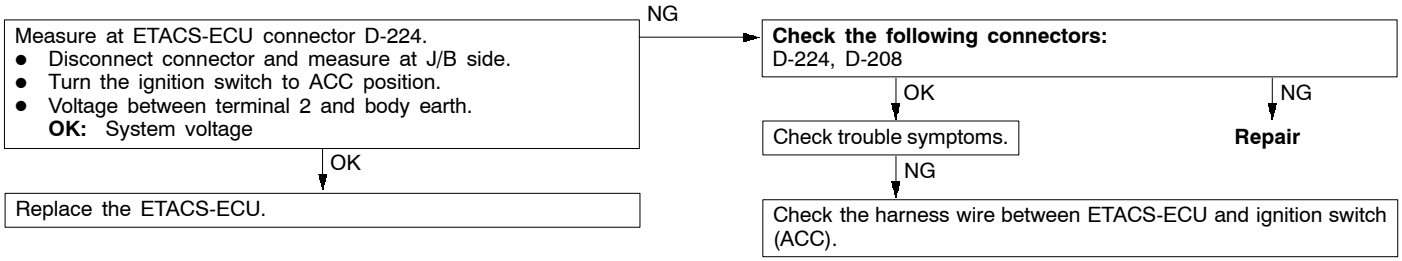


## Inspection Procedure P-2

| Ignition switch (IG1) signal is not sent to the ETACS-ECU. | Probable cause |
|---|---|
| The ignition switch (IG1) input signal is used to operate the following devices. If the signal fails, these devices will not work normally.<br>● Light reminder warning buzzer function<br>● Power window timer function<br>● Sunroof timer function<br>● Ignition key hole illumination lamp<br>● Headlamp automatic shutdown function<br>● Turn-signal lamp<br>● Room lamp dimming function | ● Malfunction of ETACS-ECU<br>● Malfunction of harness wire or connector |

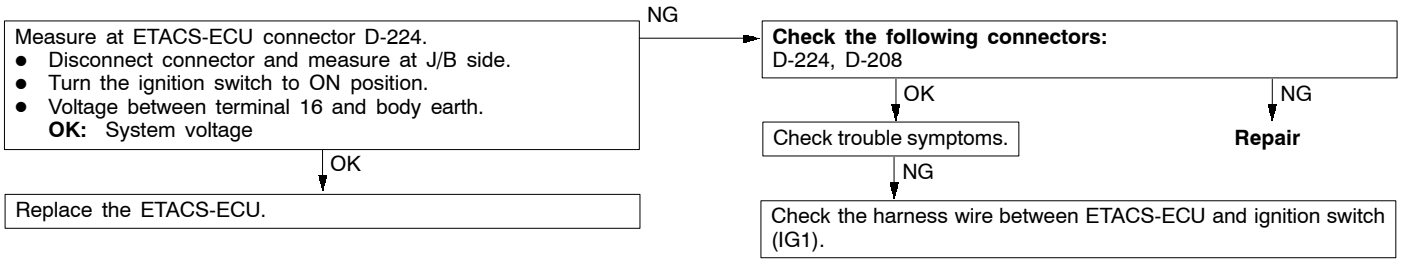


Purchased from www.WorkshopManuals.co.uk

www.WorkshopManuals.co.uk

## Inspection Procedure P-3

| Key reminder switch signal is not sent to the ETACS-ECU. | Probable cause |
|---|---|
| The key reminder switch input signal is used to operate the following devices. If the signal fails, these devices will not work normally.<br>● Forgotten key prevention function<br>● Keyless entry system<br>● Ignition key hole illuminaiton lamp<br>● Room lamp dimming function | ● Malfunction of key reminder switch<br>● Malfunction of ETACS-ECU<br>● Malfunction of harness wire or connector |

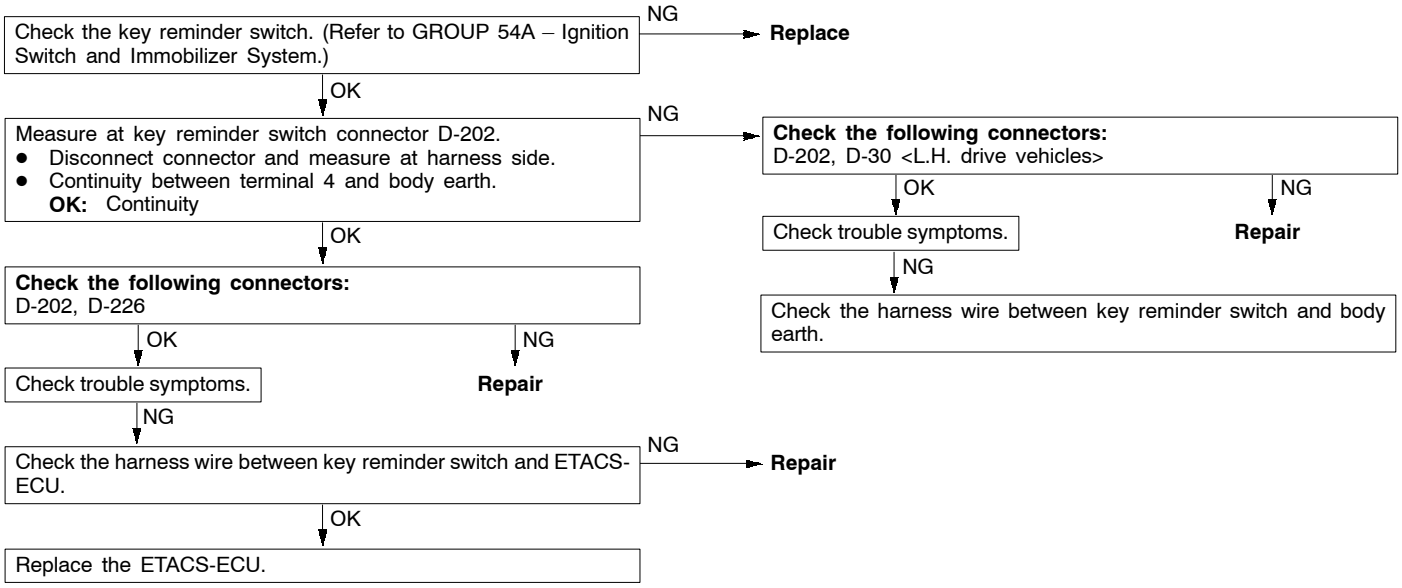


## Inspection Procedure P-4

| Hazard warning lamp switch signal is not sent to the ETACS-ECU. | Probable cause |
|---|---|
| The hazard warning lamp switch input signal is used to operate the following devices. If the signal fails, these devices will not work normally.<br>● Hazard warning lamp<br>● Keyless entry system (Registering the encrypted code) | ● Malfunction of hazard warning lamp switch<br>● Malfunction of ETACS-ECU<br>● Malfunction of harness wire or connector |

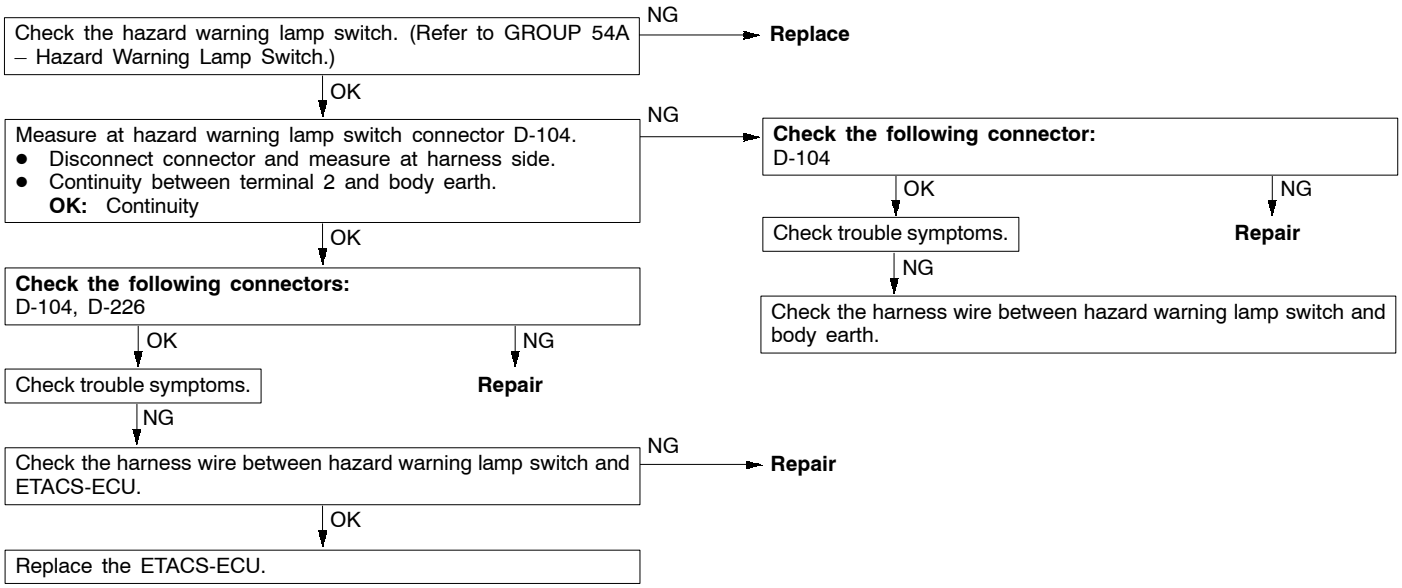


Purchased from www.WorkshopManuals.co.uk

www.WorkshopManuals.co.uk

## Inspection Procedure P-5

| Front fog lamp switch signal is not sent to the ETACS-ECU. | Probable cause |
|---|---|
| The front fog lamp switch input signal is used to operate the front fog lamp. If the signal fails, front fog lamp will not work normally. | • Malfunction of fog lamp switch<br>• Malfunction of ETACS-ECU<br>• Malfunction of harness wire or connector |

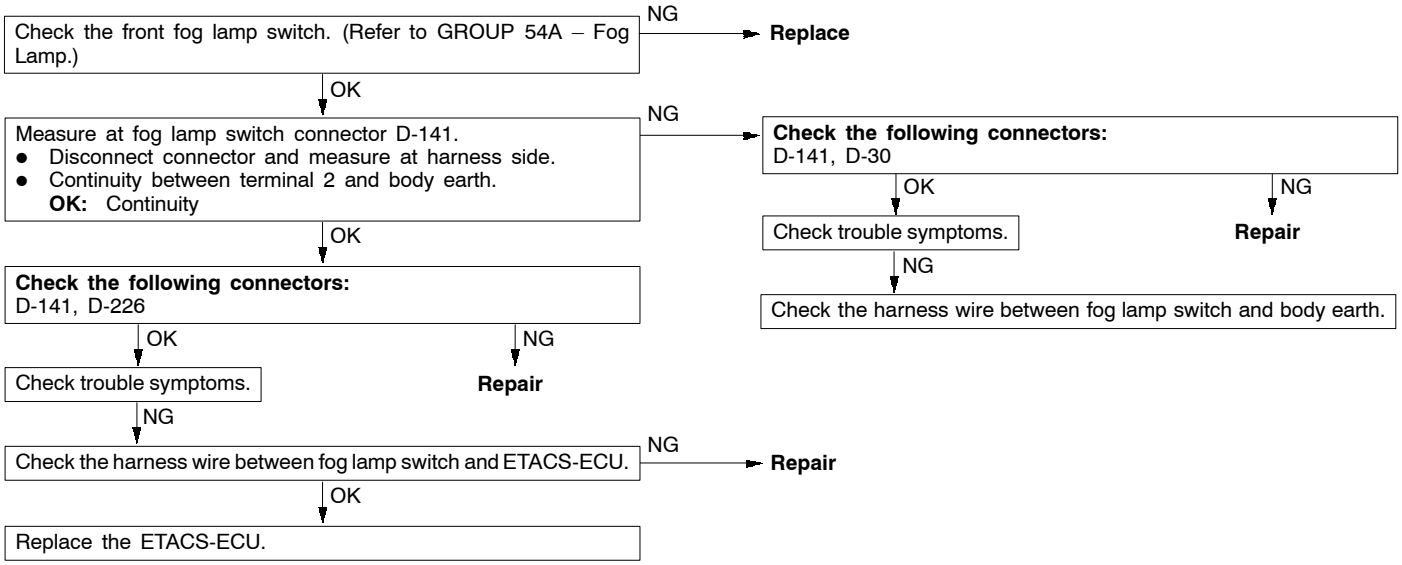


Purchased from www.WorkshopManuals.co.uk

www.WorkshopManuals.co.uk

## Inspection Procedure P-6

| Rear fog lamp switch signal is not sent to the ETACS-ECU. | Probable cause |
|---|---|
| The rear fog lamp switch input signal is used to operate the rear fog lamp. If the signal fails, rear fog lamp will not work normally. | • Malfunction of fog lamp switch<br>• Malfunction of ETACS-ECU<br>• Malfunction of harness wire or connector |

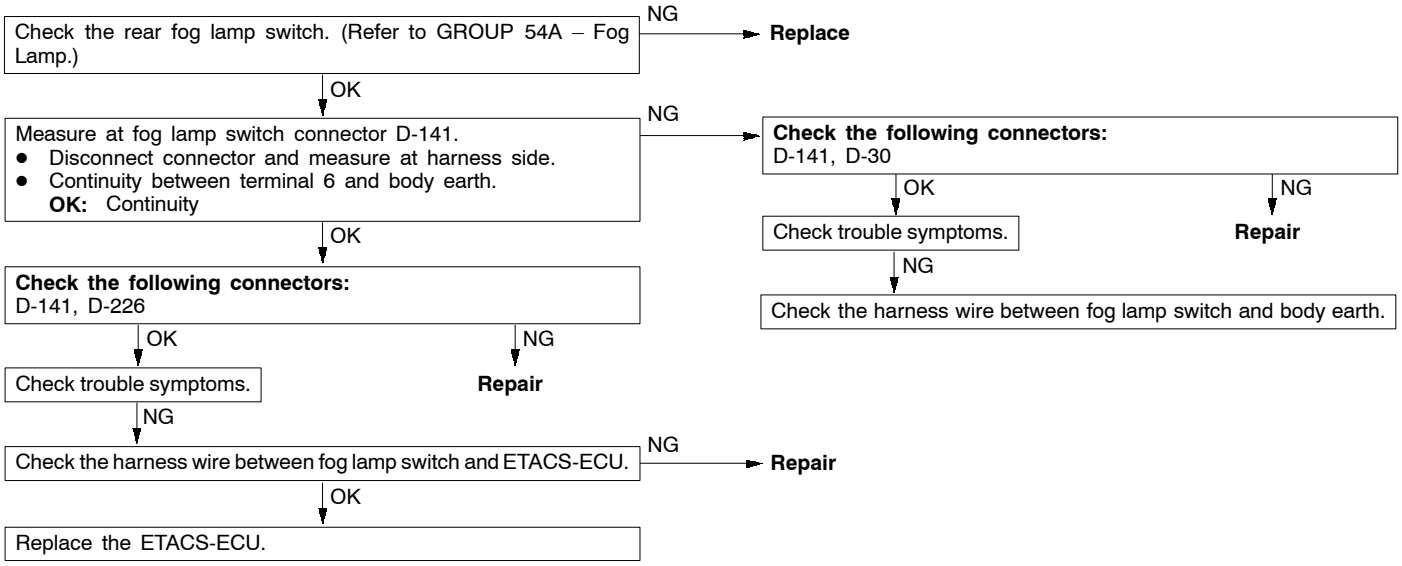


## Inspection Procedure P-7

| Back-up lamp switch signal is not sent to the ETACS-ECU. <M/T> | Probable cause |
|---|---|
| The back-up lamp switch input signal is used to operate the rear wiper. If the signal is an error, the rear wiper will not operate consecutively twice when the rear wiper is on and the shift lever is moved to R position. | • Malfunction of back-up lamp switch<br>• Malfunction of ETACS-ECU<br>• Malfunction of harness wire or connector |

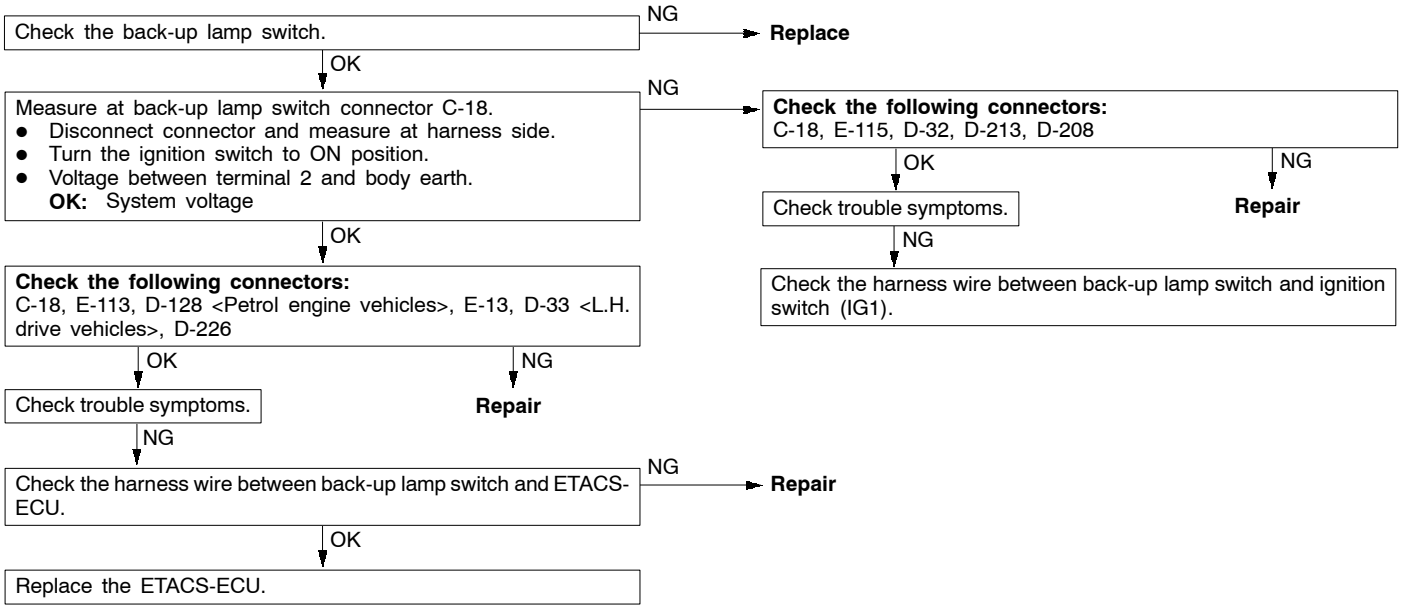


Purchased from www.WorkshopManuals.co.uk

www.WorkshopManuals.co.uk

## Inspection Procedure P-8

| Inhibitor switch (reverse) signal is not sent to the ETACS-ECU. <A/T> | Probable cause |
|---|---|
| The inhibitor switch (reverse) input signal is used to operate the rear wiper. If the signal is an error, the rear wiper will not operate consecutively twice when the rear wiper is on and the selector lever is moved to R position. | • Malfunction of inhibitor switch<br>• Malfunction of ETACS-ECU<br>• Malfunction of harness wire or connector |

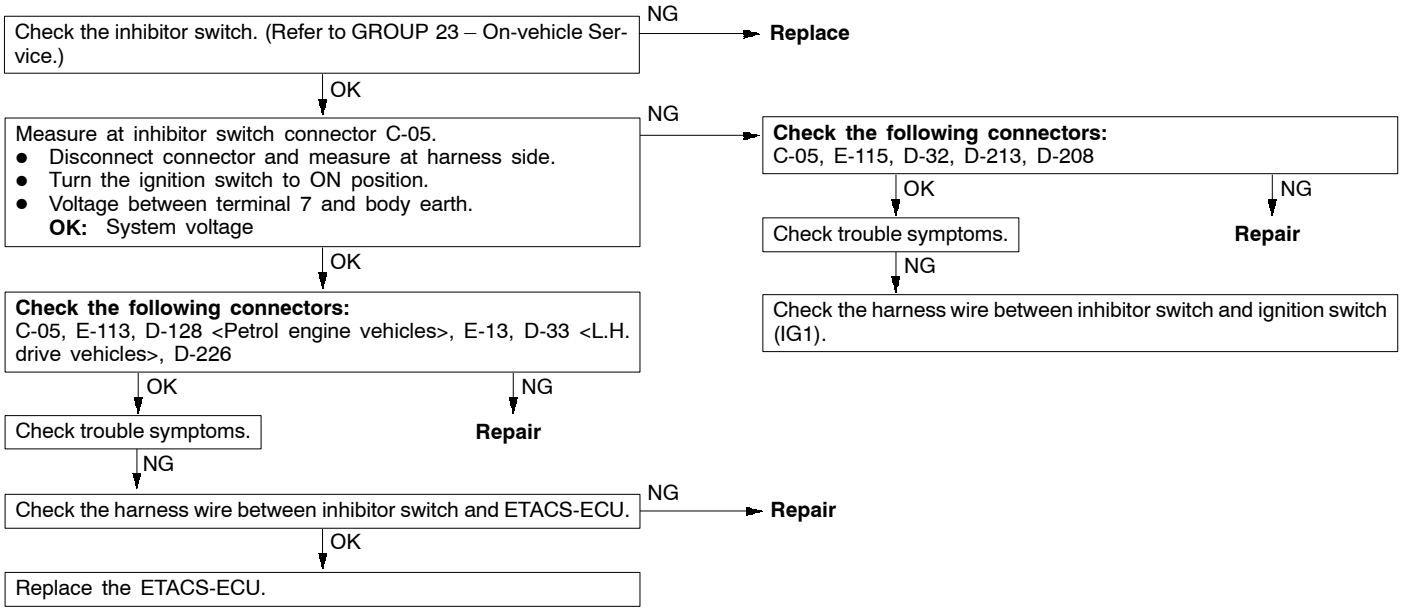


## Inspection Procedure P-9

| Rear wiper motor auto-stop signal is not sent to the ETACS-ECU. | Probable cause |
|---|---|
| Rear wiper motor auto-stop signal is used to operate the rear wiper. If the signal is an error, the rear wiper will not stop at the predetermined park position. | • Malfunction of rear wiper motor<br>• Malfunction of ETACS-ECU<br>• Malfunction of harness wire or connector |

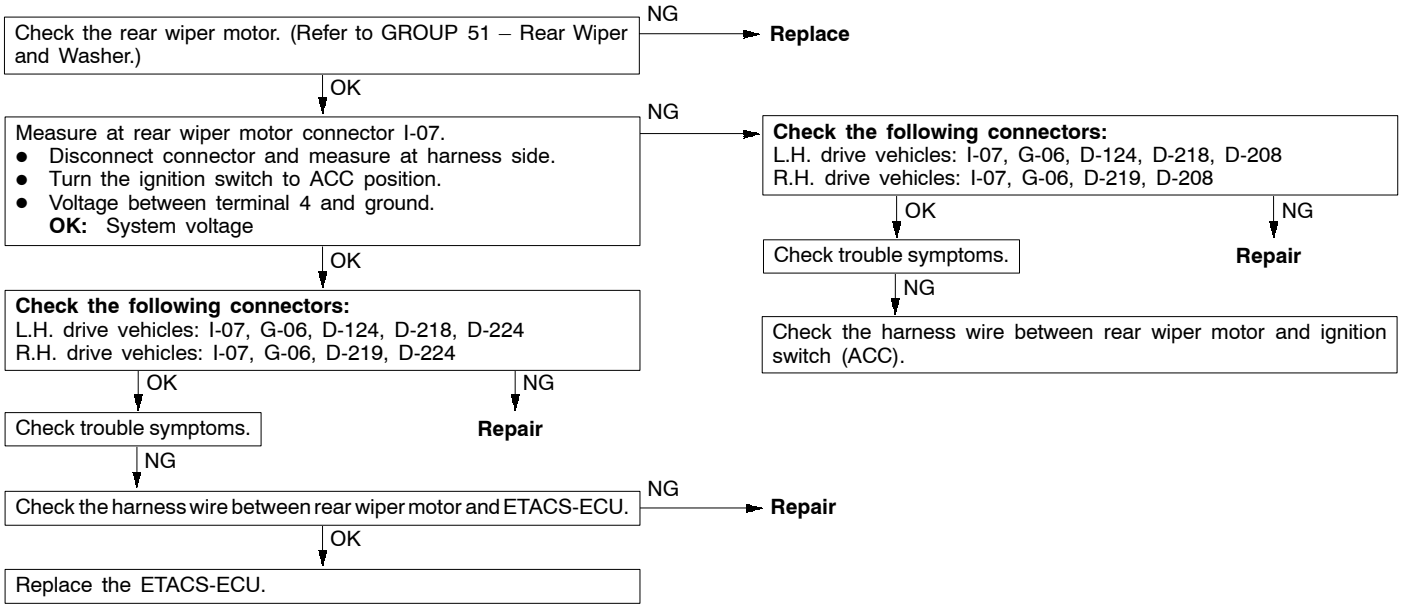


Purchased from www.WorkshopManuals.co.uk

www.WorkshopManuals.co.uk

## Inspection Procedure P-10

| Driver's door switch signal is not sent to the ETACS-ECU.<br>Door switches signal is not sent to the ETACS-ECU. | Probable cause |
|---|---|
| **<Driver's door switch>**<br>The driver's door switch is used to operate the following functions. If the signal fails, these devices will not work normally.<br>● Light reminder warning buzzer function<br>● Forgotten key prevention function<br>● Power window timer function<br>● Ignition key hole illumination lamp<br>● Headlamp automatic shutdown function<br>**<Door switches>**<br>The door switches is used to operate the following devices. If the signal fails, these devices will not work normally.<br>● Keyless entry system<br>● Room lamp dimming function | ● Malfunction of driver's, front passenger's, rear or back door switch<br>● Malfunction of ETACS-ECU<br>● Malfunction of harness wire or connector |

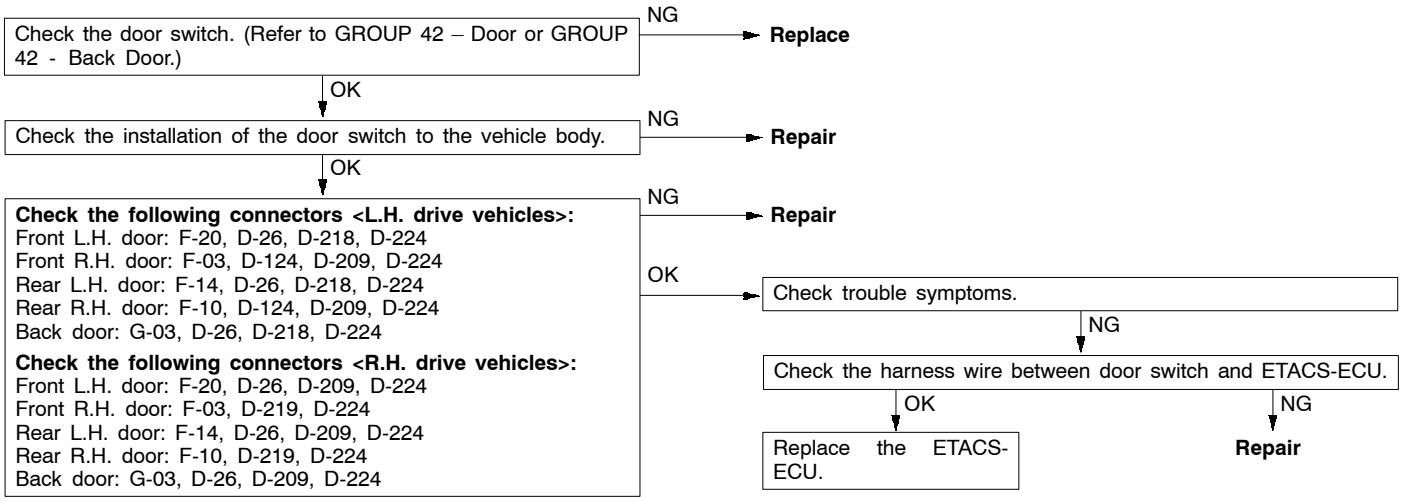


Purchased from www.WorkshopManuals.co.uk

www.WorkshopManuals.co.uk

## Inspection Procedure P-11

| Front passenger's or back door lock key cylinder switch signal is not sent to the ETACS-ECU. | Probable cause |
|---|---|
| The front passenger's and back door lock key cylinder switch input signal is used to operate the central door locking system. If the signal fails, central door locking system will not work normally. | • Malfunction of front passenger's or back door lock key cylinder switch<br>• Malfunction of ETACS-ECU<br>• Malfunction of harness wire or connector |

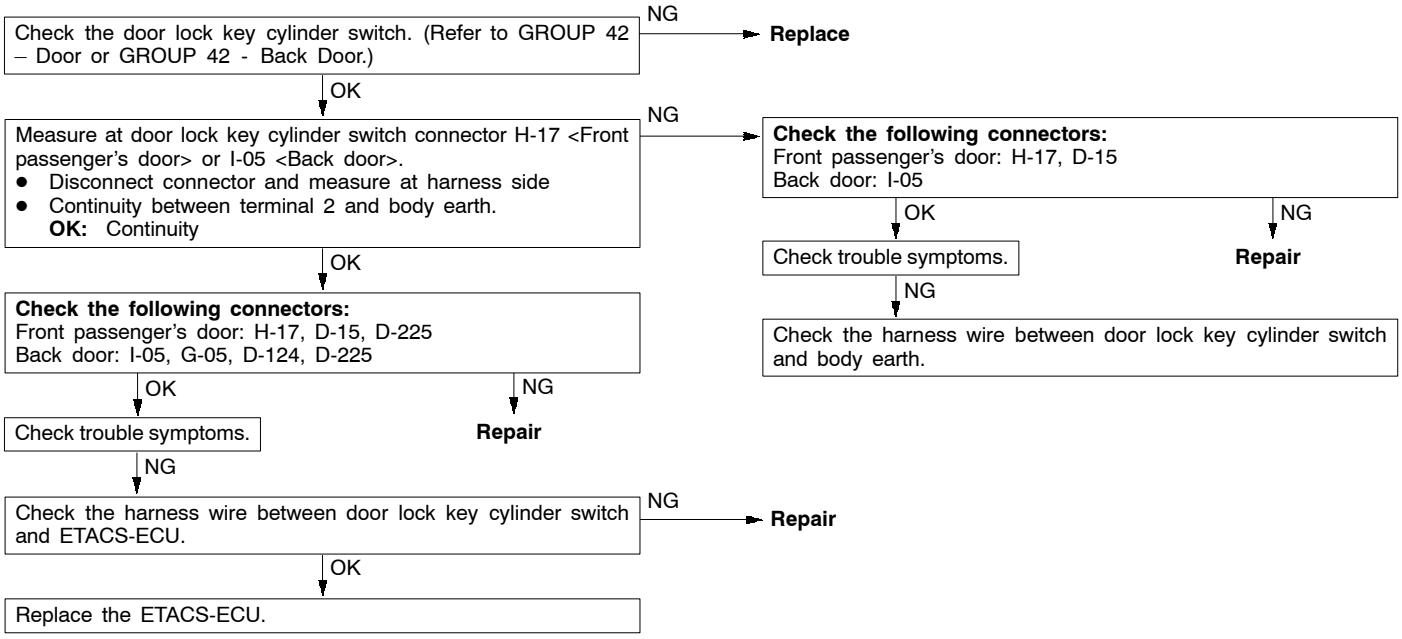


## Inspection Procedure P-12

| Driver's door lock actuator switch signal is not sent to the ETACS-ECU. | Probable cause |
|---|---|
| The driver's door lock actuator switch is used to operate the following systems or functions. If the signal fails, these systems or function will not work normally.<br>• Central door locking system<br>• Forgotten key prevention function<br>• Keyless entry system | • Malfunction of driver's door lock actuator<br>• Malfunction of ETACS-ECU<br>• Malfunction of harness wire or connector |

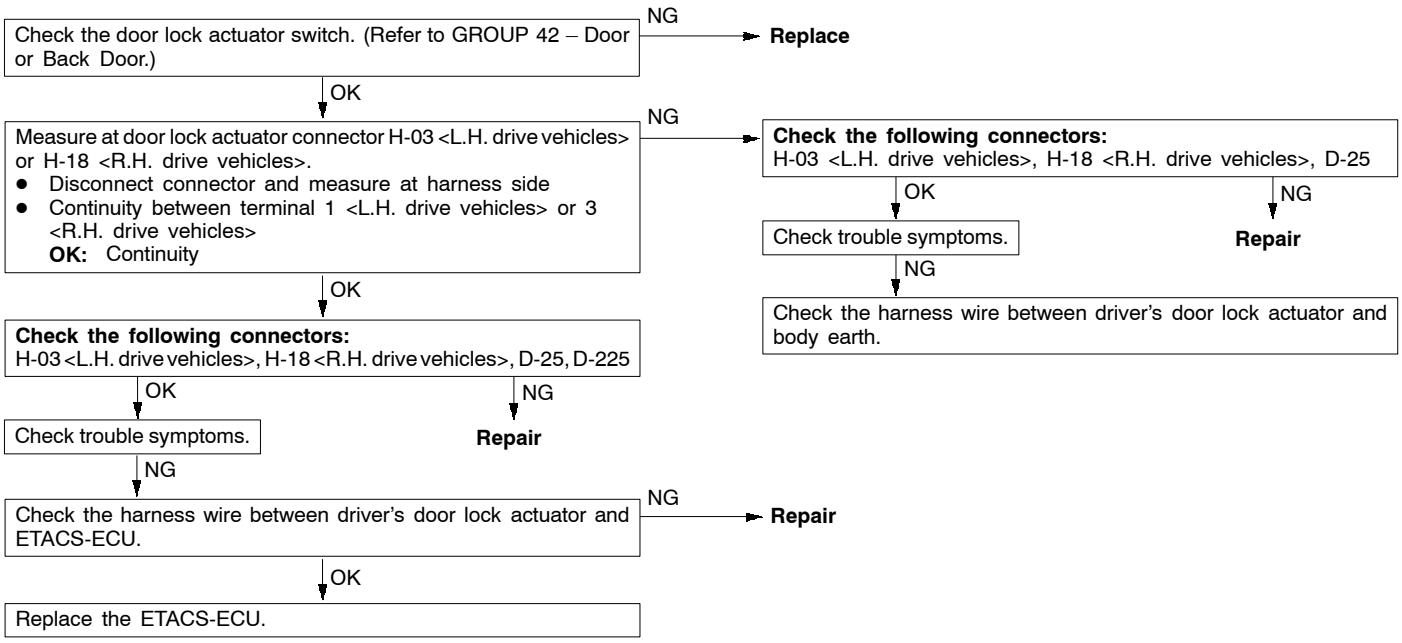


Purchased from www.WorkshopManuals.co.uk

www.WorkshopManuals.co.uk

## Inspection Procedure P-13

| **Column switch:** | **Probable cause** |
|---|---|
| ● **Tail lamp switch signal is not sent to the ETACS-ECU.**<br>● **Headlamp switch signal is not sent to the ETACS-ECU.**<br>● **Dimmer switch signal is not sent to the ETACS-ECU.**<br>● **Passing switch signal is not sent to the ETACS-ECU.**<br>● **Turn-signal lamp switch signal is not sent to the ETACS-ECU.**<br>● **Headlamp washer switch is not sent to the ETACS-ECU.** | |
| The column switch (lighting switch) is used to operate the following systems or functions. If the signal fails, these systems or function will not work normally.<br>● Headlamp washer<br>● Headlamp, tail lamp<br>● Turn-signal lamp<br>● Front fog lamp<br>● Rear fog lamp | ● Malfunction of column switch<br>● Malfunction of ETACS-ECU |

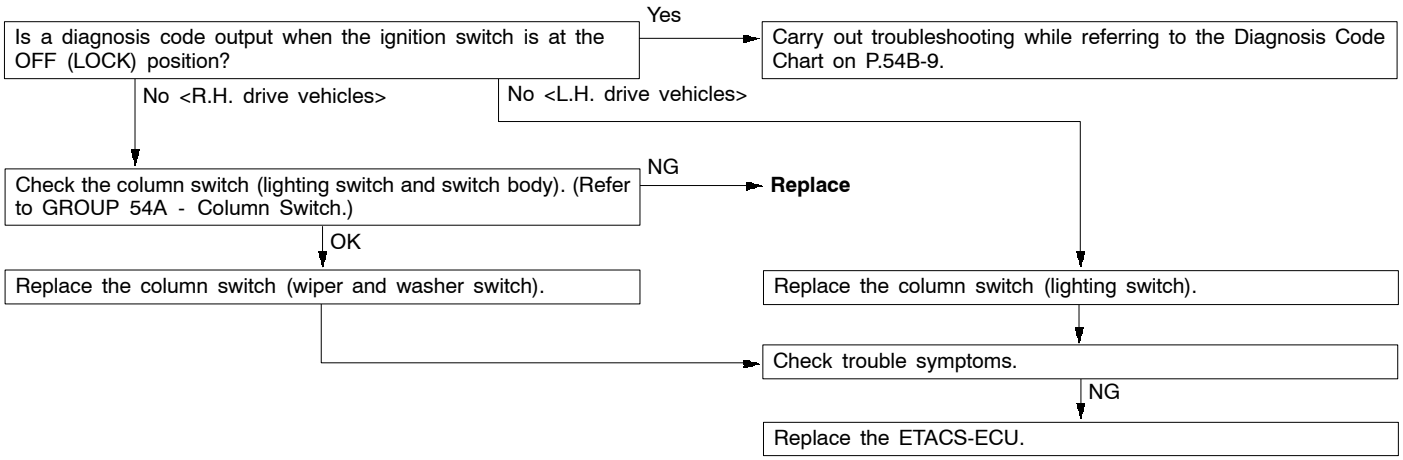


Purchased from www.WorkshopManuals.co.uk

www.WorkshopManuals.co.uk

## Inspection Procedure P-14

| **Column switch:**<br>• **Windshield mist wiper switch signal is not sent to the ETACS-ECU.**<br>• **Windshield intermittent wiper switch signal is not sent to the ETACS-ECU.**<br>• **Windshield low-speed wiper switch signal is not sent to the ETACS-ECU.**<br>• **Windshield high-speed wiper switch signal is not sent to the ETACS-ECU.**<br>• **Windshield washer switch is not sent to the ETACS-ECU.**<br>• **Rear wiper switch is not sent to the ETACS-ECU.**<br>• **Rear washer is not sent to the ETACS-ECU.** | **Probable cause** |
|---|---|
| The column switch (wiper and washer switch) is used to operate the following systems or functions. If the signal fails, these systems or function will not work normally.<br>• Windshield wiper and washer<br>• Rear wiper and washer | • Malfunction of column switch<br>• Malfunction of ETACS-ECU |

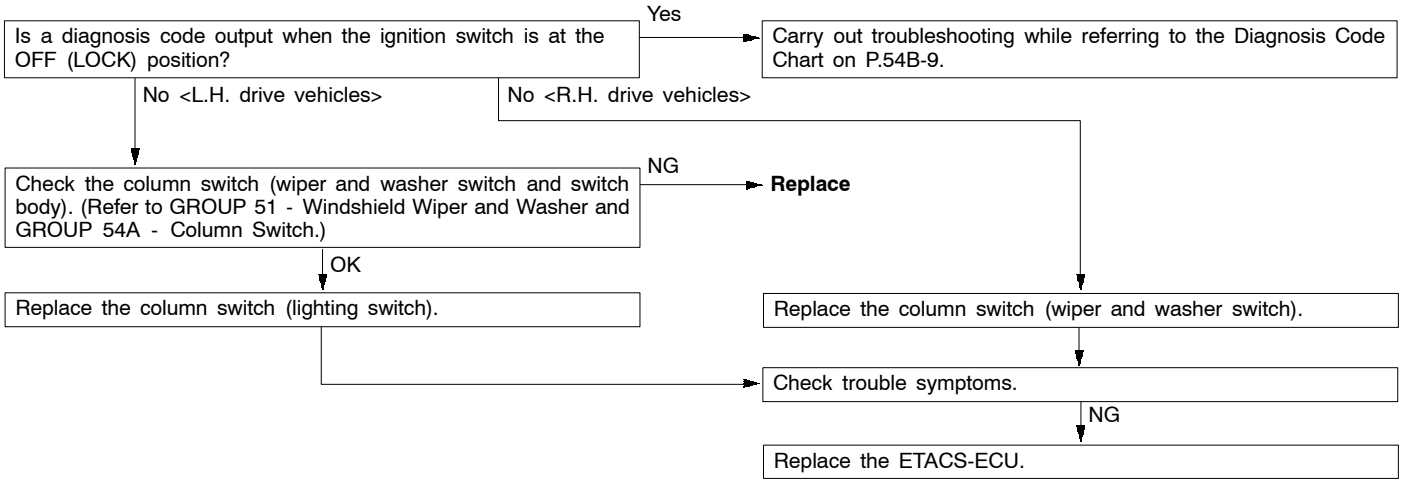


## Inspection Procedure P-15

| **Column switch: Windshield intermittent wiper interval adjusting knob signal is not sent to the ETACS-ECU.** | **Probable cause** |
|---|---|
| If the windshield intermittent wiper interval adjusting knob is defective the windshield intermittent wiper interval can not be adjusted. | • Malfunction of column switch<br>• Malfunction of ETACS-ECU<br>• Malfunction of harness wire or connector |

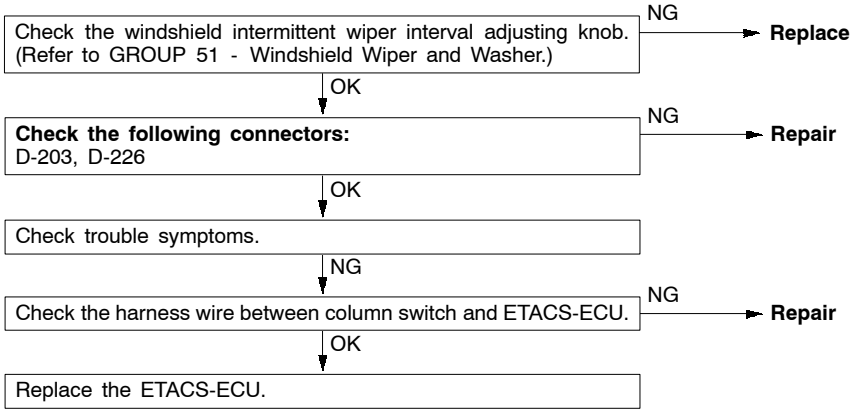


Purchased from www.WorkshopManuals.co.uk

www.WorkshopManuals.co.uk

## Inspection Procedure P-16

| Power window main switch: Any switch signal is not sent to the ETACS-ECU. | Probable cause |
|---|---|
| If there is a problem with communication between the power window main switch and the ETACS-ECU, the input signal check for the power window main switch can no longer be carried out. In addition, the power window timer function will also stop working. | • Malfunction of power window main switch<br>• Malfunction of ETACS-ECU<br>• Malfunction of harness wire or connector |

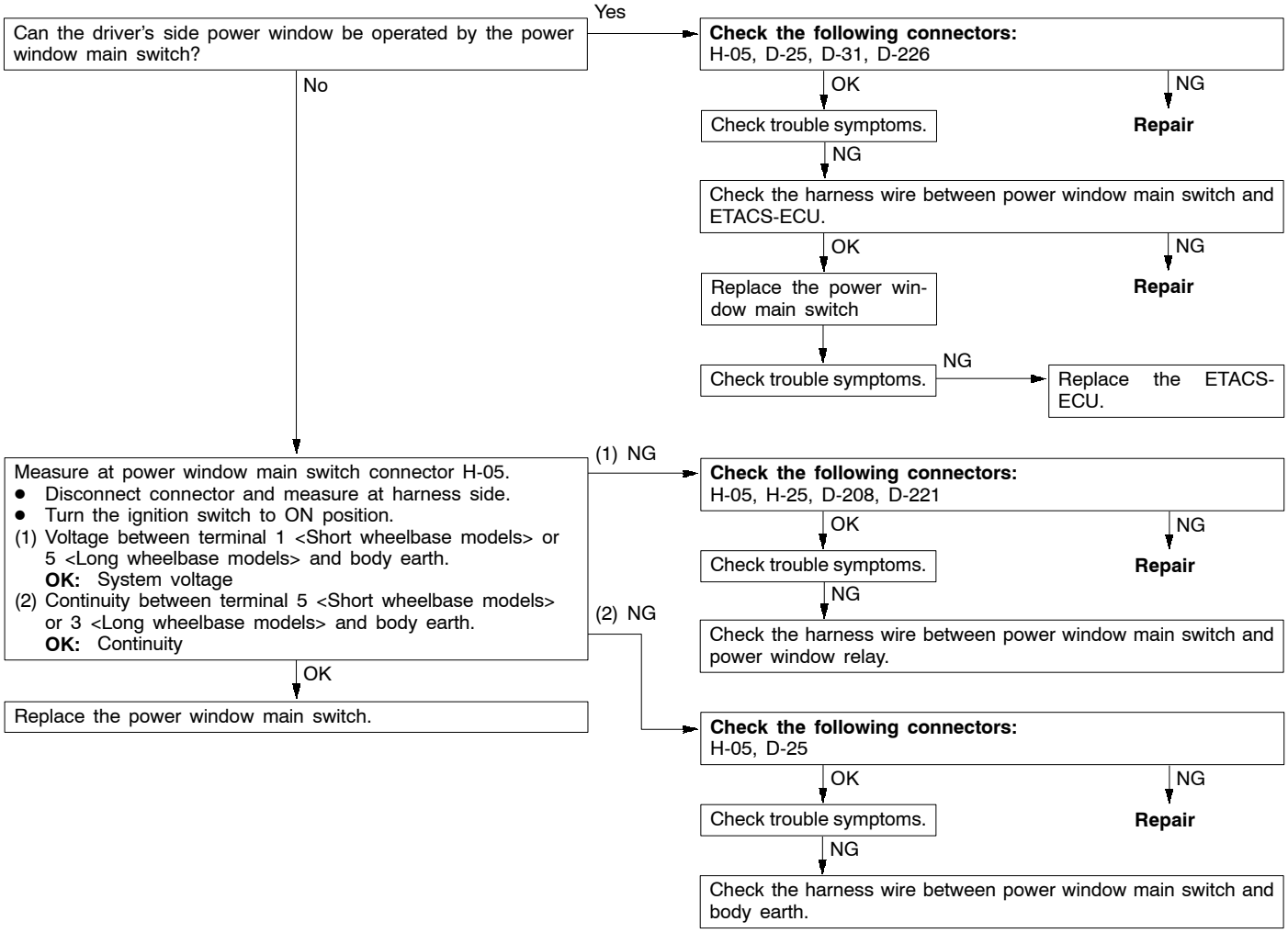


Purchased from www.WorkshopManuals.co.uk

www.WorkshopManuals.co.uk

## Inspection Procedure P-17

| Transmitter: Any switch signal is not sent to the ETACS-ECU. | Probable cause |
|---|---|
| The transmitter input signal is used to operate the keyless entry system. If the signal fails, keyless entry will not work normally. | • Malfunction of transmitter<br>• Malfunction of ETACS-ECU |

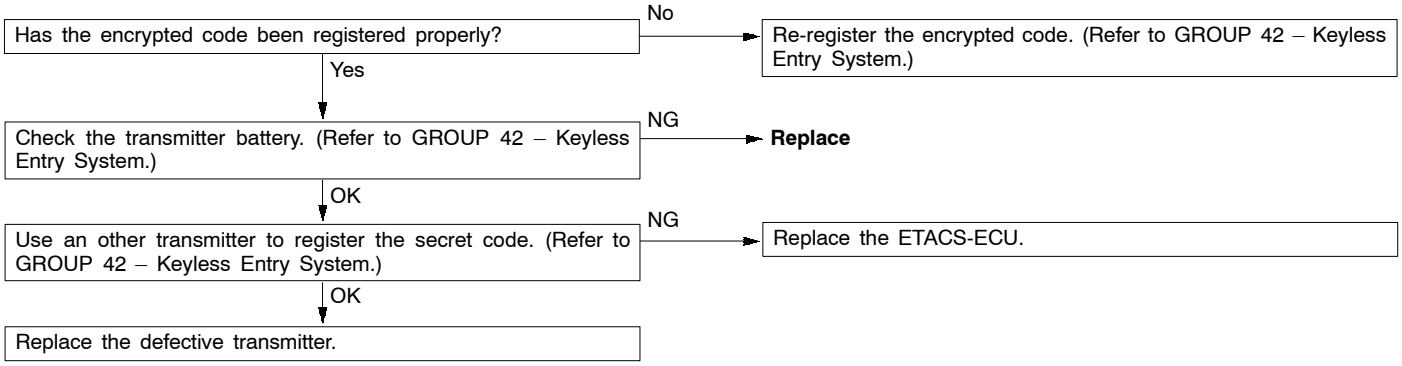


## Inspection Procedure P-18

| Sunroof switch: Any switch signal is not sent to the ETACS-ECU. | Probable cause |
|---|---|
| If there is a problem with communication between the sunroof motor assembly and the ETACS-ECU, the input signal check for the sunroof switch can no longer be carried out. In addition, the sunroof timer function will also stop working. | • Malfunction of sunroof switch<br>• Malfunction of sunroof motor assembly<br>• Malfunction of ETACS-ECU<br>• Malfunction of harness wire or connector. |

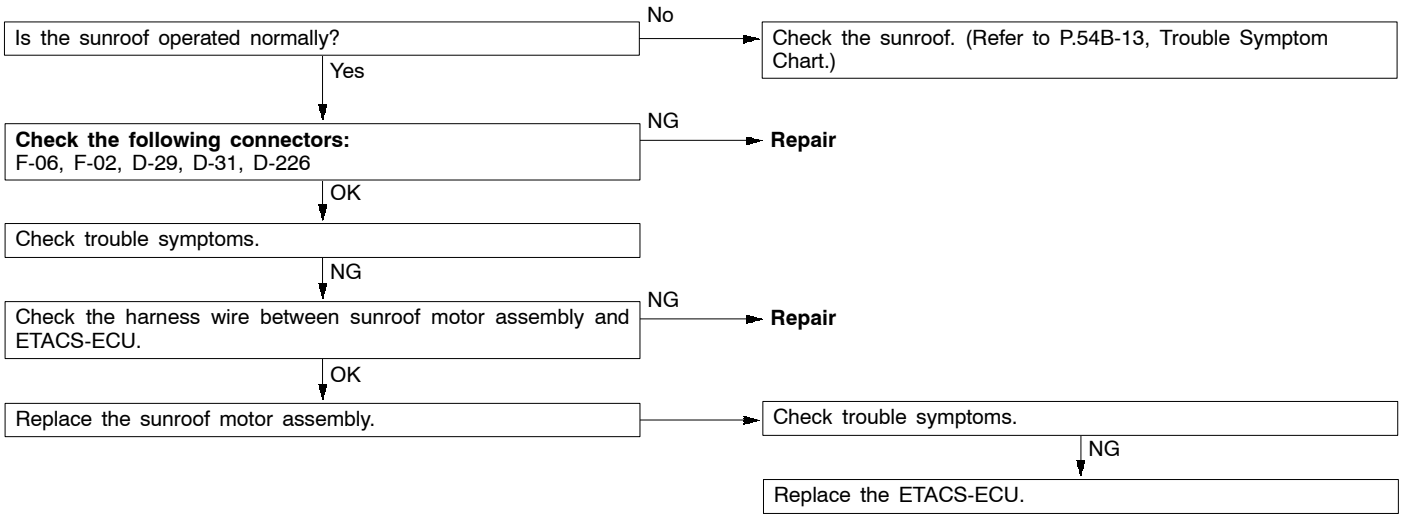


Purchased from www.WorkshopManuals.co.uk

www.WorkshopManuals.co.uk

## Inspection Procedure P-19

| Center display: Any switch signal is not sent to the ETACS-ECU. | Probable cause |
|---|---|
| The cause is probably a malfunction of the center display or the ETACS-ECU. | • Malfunction of center display<br>• Malfunction of ETACS-ECU<br>• Malfunction of harness wire or connector. |

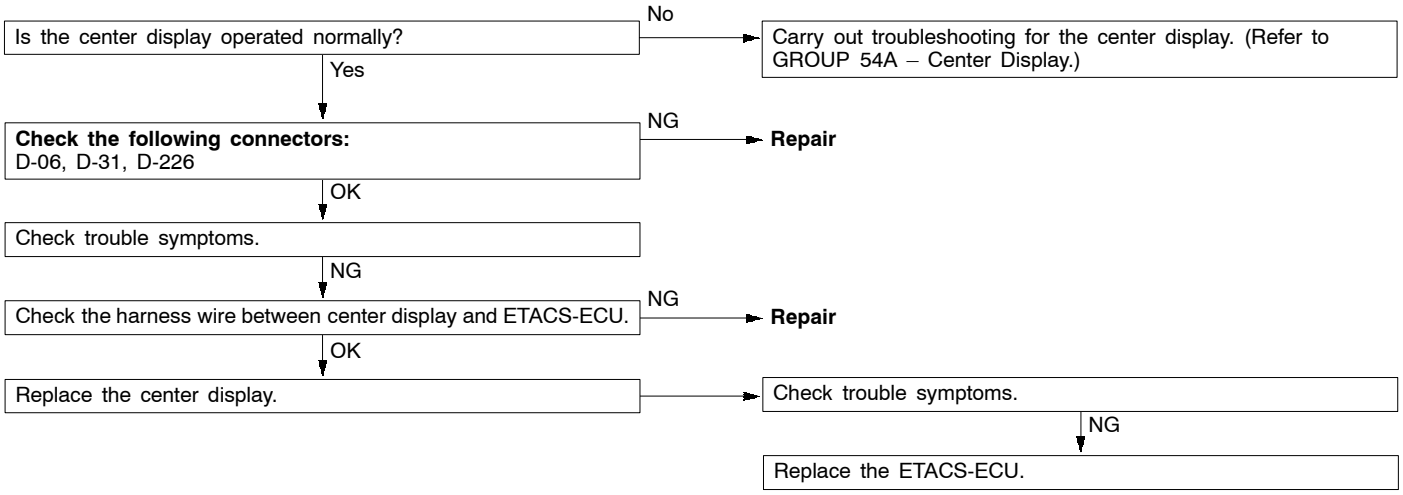


## Inspection Procedure Q-1

| Check the circuit (power supply line) from the battery to the ETACS-ECU. | Probable cause |
|---|---|
| If that power supply circuit is defective, the circuit flowing through the ignition switch (IG1) will function as a back-up circuit. In this case, the following functions will not work when the ignition switch is at LOCK (OFF) position.<br>• Ignition key reminder warning buzzer function<br>• Central door lock ing system<br>• Ignition key hole illumination lamp<br>• Hazard warning lamp<br>• Room lamp | • Malfunction of ETACS-ECU<br>• Malfunction of harness wire or connector. |

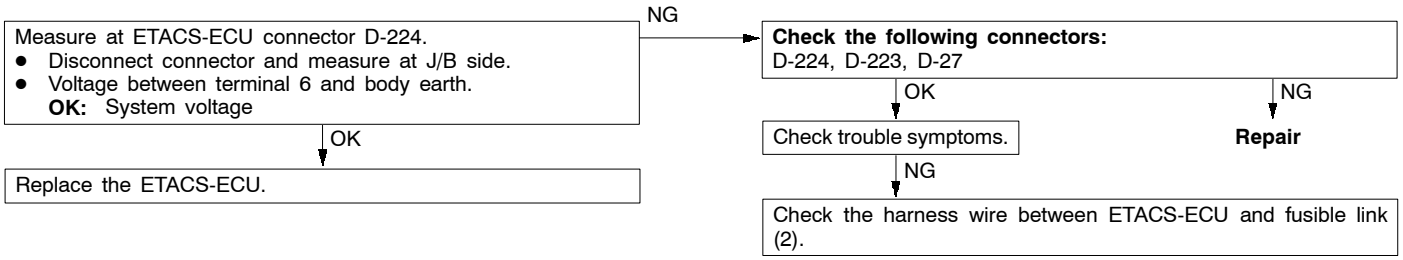


Purchased from www.WorkshopManuals.co.uk

www.WorkshopManuals.co.uk

# CHECK AT ECU TERMINALS

## 1. ETACS-ECU

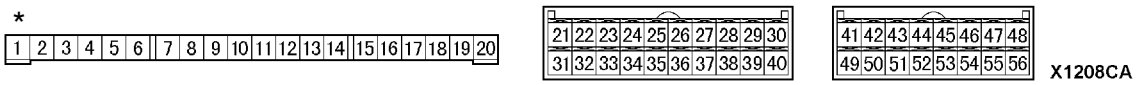


NOTE
*: Since the ETACS-ECU is directly mounted on the junction block and the measurement for connector of terminals No.1 to 20 is impossible, the values concerning these terminals are shown for reference only.

| Terminal No. | Check items | Checking requirements | Normal condition |
|---|---|---|---|
| 1 | Rear wiper output | When rear wiper is operated | System voltage |
| 2 | Ignition switch (ACC) power supply | Ignition switch: ACC | System voltage |
| 3 | Rear washer output | When rear washer is operated | System voltage |
| 4 | Door lock output | When the door lock actuators are working to lock | System voltage |
| 5 | Rear wiper auto-stop signal input | When rear wiper is operated | System voltage |
| 6 | Battery power supply (for ECU) | Always | System voltage |
| 7 | Door switches signal input | Either door switch: ON (Door open) | 0 V |
| 8 | Power window relay output | When power window can be operated | 2 V or less |
| 9 | Driver's door switch signal input | Driver's door switch: ON (Driver's door open) | 0 V |
| 11 | Battery power supply (for turn-signal lamp) | Always | System voltage |
| 12 | Battery power supply (for central door lock) | Always | System voltage |
| 14 | Turn-signal lamp (R.H.) output | When turn-signal lamp (L.H.) is lighted | System voltage |
| 15 | Turn-signal lamp (L.H.) output | When turn-signal lamp (R.H.) is lighted | System voltage |
| 16 | Ignition switch (IG1) power supply | Ignition switch: ON | System voltage |
| 17 | Door unlock output | When door lock actuators are working to unlock | System voltage |
| 18 | Room lamp output | When room lamp is lighted | 2 V or less |
| 20 | Ground (for ECU) | Always | 0 V |
| 21 | SWS communication line | Always | 0 - 12 V (pulse signal) |
| 22 | Diagnosis indication selection input | When MUT-II is connected | 0 V |
| 23 | Ground (for sensor) | Always | 0 V |
| 24 | Front fog lamp switch signal input | Front fog lamp switch: ON | 0 V |
| 25 | Rear fog lamp switch signal input | Rear fog lamp switch: ON | 0 V |

Purchased from www.WorkshopManuals.co.uk

www.WorkshopManuals.co.uk

| Terminal No. | Check items | Checking requirements | Normal condition |
|---|---|---|---|
| 26 | Key reminder switch signal input | Key reminder switch: ON (Ignition key removed) | 0 V |
| 27 | Hazard warning lamp switch signal input | Hazard warning lamp switch: ON | 0 V |
| 29 | Recognition line of daytime running lamp (DRL) <Vehicles with DRL> | Always | 0 V |
| 31 | Data request signal output | Always | 0 - 5 V (pulse signal) |
| 34 | Windshield intermittent wiper interval adjusting knob signal input | Ignition switch: ACC,<br>Windshield intermittent wiper interval adjusting knob: FAST → SLOW | 0 → 2.5 V |
| 35 | Back-up lamp switch signal input <M/T> | Ignition switch: ON,<br>Shift lever: R | System voltage |
| | Inhibitor switch (reverse) signal input <A/T> | Ignition switch: ON,<br>Selector lever: R | System voltage |
| 36 | Ignition key hole illumination lamp output | When ignition key hole illumination lamp is lighted | 2 V or less |
| 37 | Diagnosis code or input signal check output | When diagnosis code is output | 0 - 12 V (pulse signal) |
| | | When input signal check is output | 0, 12 V (When input pulse signal is changed) |
| 40 | Rear fog lamp relay output | When rear fog lamp is lighted | 2 V or less |
| 53 | Front passenger's and back door lock key cylinder switch (LOCK) signal input | Front passenger's or back door lock key cylinder switch: LOCK | 0 V |
| 54 | Front passenger's and back door lock key cylinder switch (UNLOCK) signal input | Front passenger's or back door lock switch: UNLOCK | 0 V |
| 55 | Driver's door lock actuator switch (LOCK) signal input | Driver's door lock actuator switch: LOCK | 0 V |
| 56 | Driver's door lock actuator switch (UNLOCK) signal input | Driver's door lock actuator switch: UNLCOK | 0 V |

Purchased from www.WorkshopManuals.co.uk

www.WorkshopManuals.co.uk

## 2. COLUMN SWITCH

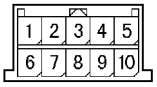

X1209CA

| Terminal No. | Check items | Checking requirements | Normal condition |
|---|---|---|---|
| 1 | Battery power supply | Always | System voltage |
| 2 | Data request signal input | Always | 0 - 12 V (pulse signal) |
| 3 | SWS communication line | Always | 0 - 5 V (pulse signal) |
| 4 | Ground | Always | 0 V |
| 6 | Windshield intermittent wiper interval adjusting knob signal output | Ignition switch: ACC,<br>Windshield intermittent wiper interval adjusting knob: FAST → SLOW | 0 → 2.5 V |
| 8 | Windshield wiper switch backup output | Windshield low-speed wiper switch or windshield high-seed wiper switch: ON | 0 V |
| 9 | Ignition switch (IG1) power supply | Ignition switch: ON | System voltage |
| 10 | Headlamp switch backup output | Headlamp switch: ON | 0 V |

## 3. FRONT-ECU

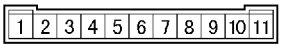

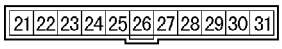

X1210CA

NOTE
Since the front-ECU is directly mounted on the relay box and measurement is impossible, these values are shown for reference.

| Terminal No. | Check items | Checking requirements | Normal condition |
|---|---|---|---|
| 1 | Front fog lamp relay output | When front fog lamp is lighted | 2 V or less |
| 2 | Headlamp (high-beam) output | When headlamp (high-beam) is lighted | System voltage |
| 3, 4 | Battery power supply (for headlamp) | Always | System voltage |
| 5 | Battery power supply (for tail lamp) | Always | System voltage |
| 6 | Headlamp (low-beam) output | When headlamp (low-beam) is lighted | System voltage |
| 7 | Battery power supply (for ECU) | Always | System voltage |
| 8 | Tail lamp output | When tail lamp is lighted | System voltage |
| 9 | Battery power supply (for headlamp washer) | Always | System voltage |
| 11 | Headlamp washer output | When headlamp washer is operated | System voltage |
| 21 | Windshield washer output | When windshield washer is operated | System voltage |

Purchased from www.WorkshopManuals.co.uk

www.WorkshopManuals.co.uk

| Terminal No. | Check items | Checking requirements | Normal condition |
|---|---|---|---|
| 22 | SWS communication line | Always | 0 - 12 V (pulse signal) |
| 23 | Windshield wiper auto-stop signal input | When windshield wiper is operated | System voltage |
| 24 | Ignition switch (ACC) power supply | Ignition switch: ACC | System voltage |
| 25 | Headlamp switch backup input | Headlamp switch: ON | 0 V |
| 26 | Windshield wiper backup input | Windshield low-speed wiper switch or windshield high-speed wiper switch: ON | 0 V |
| 27 | Windshield wiper (low-speed) output | When windshield wiper is operated (at low-speed) | System voltage |
| 28 | Windshield wiper (high-speed) output | When windshield wiper is operated (at high-speed) | System voltage |
| 30 | Ignition switch (IG2) power supply | Ignition switch: ON | System voltage |
| 31 | Ground | Always | 0 V |

## 4. POWER WINDOW MAIN SWITCH

**<Short wheelbase models>**

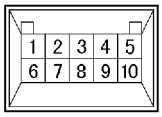

X1211CA

| Terminal No. | Check items | Checking requirements | Normal condition |
|---|---|---|---|
| 1 | Power supply | Power window relay: ON | System voltage |
| 3 | SWS communication line (between the main switch and the power window motor) | Power window relay: ON | 0 - 12 V (pulse signal) |
| 4 | SWS communication line (between the main switch and the ETACS-ECU) | Always | 0 - 12 V (pulse signal) |
| 5 | Ground | Always | 0 V |

Purchased from www.WorkshopManuals.co.uk

www.WorkshopManuals.co.uk

**<Long Wheelbase Models>**

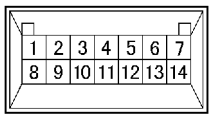

X1212CA

| Terminal No. | Check items | Checking requirements | Normal condition |
|---|---|---|---|
| 1 | SWS communication line (between the main switch and the power window motor) | Power window relay: ON | 0 - 12 V (pulse signal) |
| 3 | Ground | Always | 0 V |
| 5 | Power supply | Power window relay: ON | System voltage |
| 7 | SWS communication line (between the main switch and the ETACS-ECU) | Always | 0 V (pulse signal) |

## 5. POWER WINDOW MOTOR

X1213CA

| Terminal No. | Check items | Checking requirements | Normal condition |
|---|---|---|---|
| 1 | Ground | Always | 0 V |
| 2 | Power window sub switch (DOWN) signal input <Except driver's door> | Power window sub switch: DOWN | 0 V |
| 3 | Power supply | Power window relay: ON | System voltage |
| 4 | Power window sub switch (UP) signal input <Except driver's door> | Power window sub switch: UP | 0 V |
| 6 | SWS communication line (between the power main switch and the power window motor) | Power window relay: ON | 0 - 12 V (pulse signal) |

Purchased from www.WorkshopManuals.co.uk

www.WorkshopManuals.co.uk

## 6. SUNROOF MOTOR ASSEMBLY

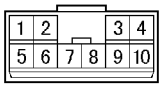

X1214CA

| Terminal No. | Check items | Checking requirements | Normal condition |
|---|---|---|---|
| 1 | Battery power supply (for motor) | Always | System voltage |
| 2 | Ignition switch (IG2) power supply | Ignition switch: ON | System voltage |
| 3 | Battery power supply (for ECU) | Always | System voltage |
| 5 | Ground | Always | 0 V |
| 6 | Sunroof switch (CLOSE/DOWN) signal input | Sunroof switch: CLOSE/DOWN | 0 V |
| 7 | Sunroof switch (UP) signal input | Sunroof switch: UP | 0 V |
| 8 | Sunroof switch (OPEN) signal input | Sunroof switch: OPEN | 0 V |
| 6 | SWS communication line | Always | 0 - 12 V (pulse signal) |

## 7. CENTER DISPLAY

Refer to GROUP 54A - Center Display.

Purchased from www.WorkshopManuals.co.uk

www.WorkshopManuals.co.uk

# ON-VEHICLE SERVICE

## ADJUSTMENT PROCEDURES OF SWS FUNCTION

Through special operation of input switches, it is possible to disable and enable the functions listed below. Settings are retained even if the battery is disconnected.

- Keyless entry hazard answerback function
- Initialization of above mentioned functions

### Configuration Mode Entry Conditions

1. Set each switch at the following condition.
   - Hazard warning lamp switch: OFF
   - Diagnosis control: ON (MUT-II connected or terminal 1 of diagnosis connector connected to earth)
   - Key reminder switch: OFF (ignition key inserted)
   - Ignition switch: LOCK (OFF)
   - Driver's door switch: OFF (driver's door closed)
2. When the windshield washer switch is continuously turned ON for more than 10 seconds, the buzzer integrated in the ETACS-ECU sounds once and the mode is switched to the configuration mode.

### Configuration Mode Cancellation Conditions

The ETACS-ECU cancels the configuration mode when any of the conditions listed below is satisfied.

- Diagnosis control: OFF (MUT-II disconnected or terminal 1 of diagnosis connector disconnected from earth)
- Key reminder switch: ON (ignition key removed)
- Ignition switch: any position other than LOCK (OFF)
- Driver's door switch: ON (driver's door open)
- No configuration performed within three minutes of entry to configuration mode (If configuration is performed within first three minutes, monitoring continues for three minutes from that point.)

### Configuration of Functions

| Function | Configuration procedure |
|---|---|
| Keyless entry hazard answerback | If the transmitter's LOCK switch is turned ON twice within two seconds, the lock answerback function's enabled/disabled status is inverted.<br>● When function is enabled, buzzer sounds once (initial status).<br>● When function is disabled, buzzer sounds twice.<br>If the transmitter's UNLOCK switch is turned ON twice within two seconds, the unlock answerback function's enabled/disabled status is inverted.<br>● When function is enabled, buzzer sounds once (initial status).<br>● When function is disabled, buzzer sounds twice. |
| Initialization of above mentioned functions | If the windshield washer switch is turned ON for more than 20 seconds, the buzzer sounds twice and all functions are initialized. (The configuration mode entry buzzer sounds after 10 seconds, but the switch must be kept ON for 20 seconds to achieve initialization.)<br>IF the windshield washer switch ins kept ON for more than 20 seconds without prior entry of the configuration mode, the configuration mode is entered after 10 seconds and initialization does not take place. |

Purchased from www.WorkshopManuals.co.uk

www.WorkshopManuals.co.uk

# HEATER, AIR CONDITIONER AND VENTILATION <MANUAL A/C>

**Click on the applicable bookmark to selected the required model year.**

Purchased from www.WorkshopManuals.co.uk

www.WorkshopManuals.co.uk

# HEATER, AIR CONDITIONER AND VENTILATION <MANUAL A/C>

## CONTENTS


**SERVICE SPECIFICATIONS . . . . . 3**

**LUBRICANTS . . . . . 3**

**TROUBLESHOOTING <FRONT HEATER, FRONT A/C> . . . . . 4**

**TROUBLESHOOTING <REAR HEATER, REAR COOLER> . . . . . 7**

**ON-VEHICLE SERVICE . . . . . 9**

- Refrigerant Level Test through Performance Test . 9
- Magnetic Clutch Test . . . . . 10
- Receiver Drier Test . . . . . 10
- Compressor Drive Belt Adjustment . . . . . 10
- Dual Pressure Switch Check . . . . . 10
- Charging . . . . . 11
- Performance Test . . . . . 15
- Front Blower Relay and Rear Blower Relay Continuity Check . . . . . 18
- Continuity Check of A/C Compressor Relay and Condernser Fan Relay . . . . . 18
- PTC Heater Relay Continuity Check . . . . . 19
- Idle-up Operation Check <Diesel> . . . . . 19
- Vacuum Actuator Check <Diesel-powered vehicles> . . . . . 20
- Idle-up Solenoid Valve Check . . . . . 21
- Clean Air Filter Replacement Procedure . . . . . 22

**FRONT A/C . . . . . 23**

- Air Conditioner Control Panel Assembly and A/C Switch . . . . . 23
- Heater Unit and Blower Assembly . . . . . 26
- Blower Motor and Resistor . . . . . 29
- Inside/Outside Air Changeover Damper Motor . . . 30
- Automatic Compressor-ECU and Air Thermo Sensor Assembly . . . . . 31

**REAR HEATER AND REAR COOLER . . . . . 32**

- Rear A/C Switch, Front Rear Fan Switch . . . . . 32
- Rear A/C Control Unit . . . . . 34
- Rear Heater Unit . . . . . 34
- Rear Heater Unit and Rear Blower Assembly . . . . 37

**HEAT SWITCH . . . . . 40**

**COMPRESSOR . . . . . 41**

**CONDENSER ASSEMBLY AND CONDENSER FAN . . . . . 45**

**REFRIGERANT LINE . . . . . 47**

**ENGINE COOLANT TEMPERATURE SWITCH . . . . . 51**

**IDLE-UP SYSTEM . . . . . 53**

**DUCTS . . . . . 54**

**VENTILATION . . . . . 56**


Purchased from www.WorkshopManuals.co.uk

www.WorkshopManuals.co.uk

# SERVICE SPECIFICATIONS

| Item | | | | Standard value |
|---|---|---|---|---|
| Idle speed r/min (N or P range) | Diesel | 4D56 | | 750 ± 100 |
| | | 4M41 | | 750 ± 50 |
| Idle-up speed r/min (N or P range) | 4D56 | | | 925 ± 25 |
| | 4M41 | A/C | When the A/C is under low or medium load | 800 ± 50 |
| | | | When the A/C is under high load | 1,000 ± 50 |
| Water temperature switch °C | A/C cut-off | | ON | 108 |
| | | | OFF | 115 |
| | Condenser fan | | OFF | 97 |
| | | | ON | 102 |
| Resistor resistance (Front A/C) Ω | Between terminals 2 and 4 | | | 0.39 ± 7 % |
| | Between terminals 1 and 2 | | | 1.49 ± 7 % |
| | Between terminals 2 and 3 | | | 2.79 ± 7 % |
| Resistance of the rear air conditioner switch (temperature control switch) kΩ <except rear heater (floor console)> | | | | 0 - 3 |
| Potentiometer for air mix damper kΩ <Rear heater> | | | | 1.2 - 4.8 |
| Resistor resistance [Rear heater (front console)] Ω | Between terminals 1 and 6 | | | 4.9 ± 7 % |
| | Between terminals 1 and 3 | | | 1.25 ± 7 % |
| Resistor resistance [Rear heater (quarter trim), rear heater] Ω | Between terminals 1 and 6 | | | 4.9 ± 7 % |
| | Between terminals 1 and 3 | | | 1.25 ± 7 % |
| Idle-up solenoid valve resistance Ω | | | | 40 |
| Air compressor air gap mm | | | | 0.35-0.65 |

# LUBRICANTS

| Item | | Specified lubricants | Quantity |
|---|---|---|---|
| Compressor oil mL | Except for vehicles with rear cooler | DENSO OIL 8 | 120 ± 20 |
| | Vehicles with rear cooler | DENSO OIL 8 | 140 ± 20 |
| Pipe connections | | DENSO OIL 8 | As required |
| Refrigerant g | Except for vehicles with rear cooler | R134a (HFC-134a) | 500 ± 20 |
| | Vehicles with rear cooler | R134a (HFC-134a) | 780 ± 20 |

Purchased from www.WorkshopManuals.co.uk

www.WorkshopManuals.co.uk

# TROUBLESHOOTING <Front heater, Front A/C>

| Trouble symptom | Probable cause | Remedy | Reference page |
|---|---|---|---|
| The air conditioner does not work. | Malfunction of fuse | Replace the fuse. | – |
| | Malfunction of harness or connector | Repair the harness or connector. | – |
| | Refrigerant leak or overfilling of refrigerant | Replenish the refrigerant, repair the leak or take out some of the refrigerant. | – |
| | A/C compressor relay is defective. | Replace the A/C compressor relay. | 55A-18 |
| | The A/C compressor magnetic clutch is defective. | Replace the A/C compressor. | 55A-10 |
| | The dual pressure switch is defective. | Replace the dual-pressure switch. | 55A-10 |
| | The A/C switch is defective. | Replace the heater control assembly. | 55A-24 |
| | The blower switch is defective. | Replace the heater control assembly. | 55A-24 |
| | The air thermo sensor is defective. | Replace the automatic compressor-ECU and the air thermo sensor assembly. | 55A-31 |
| | The automatic compressor-ECU is defective. | Replace the automatic compressor-ECU and the air thermo sensor assembly. | 55A-6 |
| | The engine-ECU is defective. | Replace the engine-ECU. | – |
| When the A/C is operating, temperature inside the passenger compartment doesn't decrease (cool air is not emitted). | Refrigerant leak | Replenish the refrigerant and repair the leak. | – |
| | The dual pressure switch is defective. | Replace the dual-pressure switch. | 55A-10 |
| | The condenser fan relay is defective. | Replace the condenser fan relay. | 55A-18 |
| | A/C compressor relay is defective. | Replace the A/C compressor relay. | 55A-18 |
| | The A/C compressor magnetic clutch is defective. | Replace the A/C compressor. | 55A-10 |
| When the A/C is operating, temperature inside the passenger compartment doesn't increase (warm air is not emitted). | Malfunction of the air thermo sensor | Replace the automatic compressor-ECU and the air thermo sensor assembly. | 55A-31 |
| The blower motor does not run. | Malfunction of fuse | Replace the fuse. | – |
| | Malfunction of harness or connector | Repair the harness or connector. | – |
| | The blower relay is defective. | Replace the blower relay. | 55A-18 |
| | The blower motor is defective. | Replace the blower motor. | 55A-29 |
| | The blower switch is defective. | Replace the heater control assembly. | 55A-24 |
| | Malfunction of the resistor | Replace the resistor. | 55A-29 |
| | The automatic compressor-ECU is defective. | Replace the automatic compressor-ECU and the air thermo sensor assembly. | 55A-6 |

Purchased from www.WorkshopManuals.co.uk

www.WorkshopManuals.co.uk

| Trouble symptom | Probable cause | Remedy | Reference page |
|---|---|---|---|
| The blower motor does not stop running. | Malfunction of fuse | Replace the fuse. | – |
| | Malfunction of harness or connector | Repair the harness or connector. | – |
| | The blower switch is defective. | Replace the blower switch assembly. | 55A-24 |
| | Malfunction of the resistor | Replace the resistor. | 55A-29 |
| | The automatic compressor-ECU is defective. | Replace the automatic compressor-ECU and the air thermo sensor assembly. | 55A-6 |
| The inside/outside air changeover is impossible. | Malfunction of fuse | Replace the fuse. | – |
| | Malfunction of harness or connector | Repair the harness or connector. | – |
| | Malfunction of the inside/outside air changeover damper motor | Check the inside/outside air changeover damper motor. | 55A-30 |
| | The automatic compressor-ECU is defective. | Replace the automatic compressor-ECU and the air thermo sensor assembly. | 55A-6 |

## CHECK AT ENGINE-ECU TERMINALS <4M41>

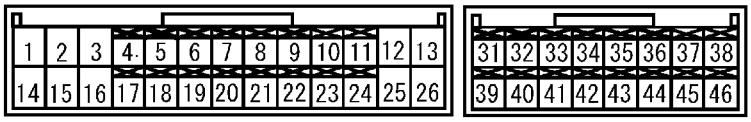


| Terminal No. | Check item | Check conditions | Normal condition |
|---|---|---|---|
| 7 | Input from the condenser fan relay (HI) | When the condenser fan stopped | 0 V |
| | | When the condenser fan is operating | System voltage |
| 21 | Input from the A/C compressor relay | When the A/C is off. | 0 V |
| | | When the A/C is in operation (When the compressor is operating) | System voltage |
| 32 | Input from dual pressure switch | Dual-pressure switch: OFF | 0 V |
| | | Dual-pressure switch: ON | System voltage |
| 33 | Automatic compressor-ECU | – | – |

Purchased from www.WorkshopManuals.co.uk

www.WorkshopManuals.co.uk

## CHECK AT THE AUTOMATIC COMPRESSOR-ECU TERMINALS AND THE AIR THERMO SENSOR ASSEMBLY TERMINALS

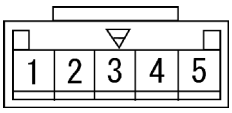


| Terminal No. | Check item | Check conditions | | Normal condition |
|---|---|---|---|---|
| 2 | Automatic compressor-ECU <4M41> | – | | – |
| 3 | Earth | At all times | | Continuity |
| 4 | Output to the dual-pressure switch | Dual-pressure switch: OFF | | 0 V |
| | | Dual-pressure switch: ON | | System voltage |
| 5 | Input from the A/C switch | Blower switch: LO | A/C switch: OFF | 0 V |
| | | | A/C switch: ON | System voltage |

Purchased from www.WorkshopManuals.co.uk

www.WorkshopManuals.co.uk

# TROUBLESHOOTING <Rear Heater, Rear Cooler>

| Trouble symptom | Probable causes | Remedy | Reference page |
|---|---|---|---|
| The rear cooler does not operate. | Malfunction of fuse | Replace the fuse. | – |
| | Malfunction of harness or connector | Repair the harness or connector. | – |
| | Refrigerant leak or overfilling of refrigerant | Replenish the refrigerant, repair the leak or take out some of the refrigerant. | – |
| | Malfunction of the rear A/C switch | Replace the rear A/C switch. | 55A-32 |
| | Malfunction of the front rear fan switch | Replace the front rear fan switch. | 55A-33 |
| | Malfunction of the air thermo sensor | Replace the air thermo sensor. | 55A-39 |
| | Malfunction of the rear blower relay | Replace the rear blower relay. | 55A-18 |
| | The rear blower motor is defective. | Replace the rear blower motor. | 55A-40 |
| | The rear cooler control unit is defective. | Replace the rear cooler control unit. | 55A-34 |
| When the rear cooler is operating, temperature inside the passenger compartment does not decrease(cool air is not emitted). | Refrigerant leak | Replenish the refrigerant and repair the leak. | – |
| When the rear heater is operating, temperature inside the passenger compartment does not increase(warm air is not emitted). | Malfunction of the air thermo sensor | Replace the air thermo sensor. | 55A-39 |
| The blower motor does not run. | Malfunction of fuse | Replace the fuse. | – |
| | Malfunction of harness or connector | Repair the harness or connector. | – |
| | Malfunction of the rear blower relay | Replace the blower relay. | 55A-18 |
| | The rear blower motor is defective. | Replace the blower motor. | 55A-40 |
| | Malfunction of the rear A/C switch | Replace the rear A/C switch. | 55A-32 |
| | Malfunction of the front rear fan switch | Replace the front rear fan switch. | 55A-33 |
| | Malfunction of the resistor | Replace the resistor. | 55A-35 |
| | The rear cooler control unit is defective. | Replace the rear cooler control unit. | 55A-34 |
| The blower motor does not stop running. | Malfunction of fuse | Replace the fuse. | – |
| | Malfunction of harness or connector | Repair the harness or connector. | – |
| | Malfunction of the rear A/C switch | Replace the rear A/C switch. | 55A-32 |
| | Malfunction of the front rear fan switch | Replace the front rear fan switch. | 55A-33 |
| | Malfunction of the resistor | Replace the resistor. | 55A-35 |
| | The rear cooler control unit is defective. | Replace the rear cooler control unit. | 55A-34 |

Purchased from www.WorkshopManuals.co.uk

www.WorkshopManuals.co.uk

## CHECK AT THE REAR A/C CONTROL UNIT TERMINALS

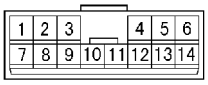

X1136CA

| Terminal No. | Check item | Check conditions | Normal condition |
|---|---|---|---|
| 1 | Magnet valve | Magnet valve: OFF | System voltage |
| | | Magnet valve: ON | Faint voltage (0.5 V) |
| 2 | Earth | At all times | Continuity |
| 3 | Input from temperature adjusting switch | Temperature adjusting switch: MAX. HOT | 1 V |
| | | Temperature adjusting switch: MAX. COOL | 4 V |
| 4 | Power supply to potentiometer | At all times | 5 V |
| 5 | Power supply to ignition switch (IG2) | Ignition switch: ON | System voltage |
| 6 | Electric motor for the air mix damper (MAX. COOL) | When the damper flap is moving to the MAX. COOL position. | 10 V |
| | | When the damper flap is moving to the MAX. HOT position. | Faint voltage (0.5 V) |
| 7 | Input from potentiometer for air mix damper | Air mix damper: MAX. HOT | 1 V |
| | | Air mix damper: MAX. COOL | 4 V |
| 8 | Earth to sensor and potentiometer | At all times | 0 V |
| 9 | Signal from air outlet changeover damper motor | Ignition switch: ON | 0 – 12 V |
| 10 | Signal from air outlet changeover damper motor | Ignition switch: ON | 0 – 12 V |
| 11 | Signal from air outlet changeover damper motor | Ignition switch: ON | 0 – 12 V |
| 12 | Input from air thermo sensor | Sensor temperature: 25°C (1.5 k Ω) | 2.2 V |
| 13 | Input from rear fan switch and front rear fan switch | Rear fan switch or front rear fan switch: ON | 0 V |
| 14 | Electric motor for the air mix damper (MAX. HOT) | When the damper flap is moving to the MAX. COOL position. | Faint voltage (0.5 V) |
| | | When the damper flap is moving to the MAX. HOT position. | 10 V |

Purchased from www.WorkshopManuals.co.uk

www.WorkshopManuals.co.uk

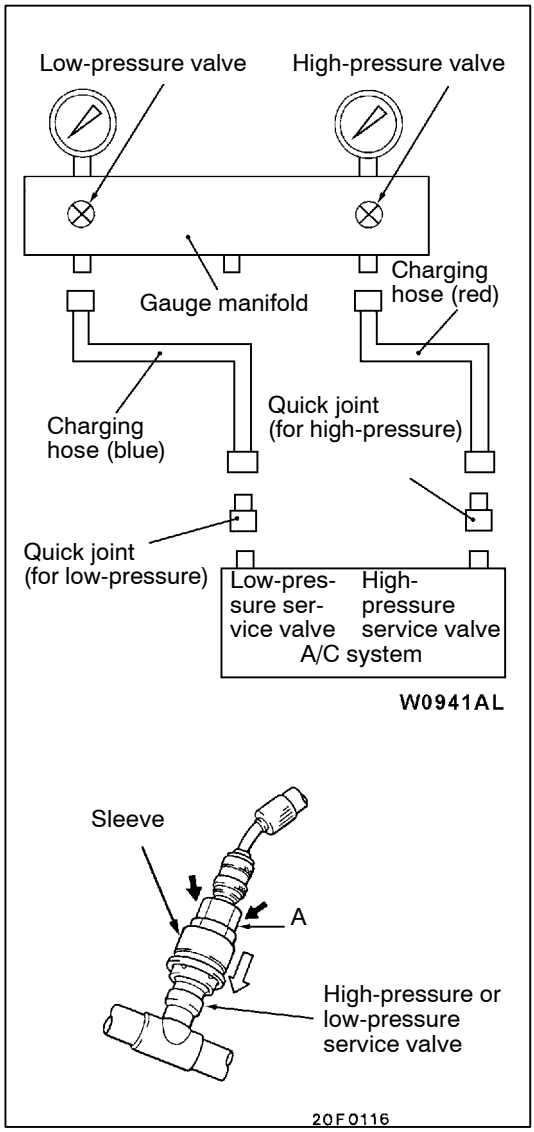


# ON-VEHICLE SERVICE

## REFRIGERANT LEVEL TEST THROUGH PERFORMANCE TEST

1. Park the vehicle to be tested in a place that is not in direct sunlight.
2. Set conditions for outside air temperature as follows:
   Dry-bulb temperature: 22°C or more
   Relative humidity: 60 to 100%
3. Close all of the doors with the windows fully closed.
4. Close the valves of the gauge manifold.
5. Connect the charging hose (red) to the gauge manifold (high-pressure side) and the quick joint (for high-pressure) to the end of the hose.
6. Connect the charging hose (blue) to the gauge manifold (low-pressure side) and the quick joint (for low-pressure) to the end of the hose.
7. Connect the quick joints to the appropriate service valves of the vehicle.
   **Caution**
   **To connect the quick joint, press section "A" firmly against the service valve until a click is heard.**
   **When connecting, run your hand along the hose while pressing the section "A" to ensure that there are no bends in the hose.**
8. Start the engine.
9. Turn the blower switch to HI position.
10. Turn on the A/C switch, and set the A/C control to MAX. COOL.
11. Set the air outlet changeover to FACE mode and the inside air/outside air changeover to the inside air recirculation mode.
12. Adjust the engine speed to 1,500 r/min.

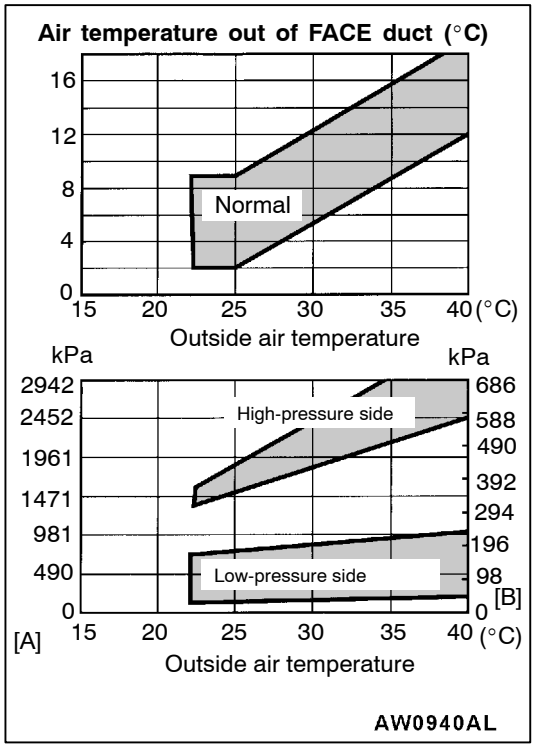


13. Check if the outside air temperature and air temperature blown out of FACE duct, and the outside air temperature and refrigerant pressure (high-pressure and low-pressure sides) are within the normal value range shown in the graphs.
14. If the temperature and pressure are below the given range, replenish the refrigerant. If above, drain the refrigerant. (For charging, refer to P.55A-11.)

    NOTE
    In the graph below, see the following:
    [A]: Refrigerant pressure (high-pressure side)
    [B]: Refrigerant pressure (low-pressure side)

Purchased from www.WorkshopManuals.co.uk

www.WorkshopManuals.co.uk

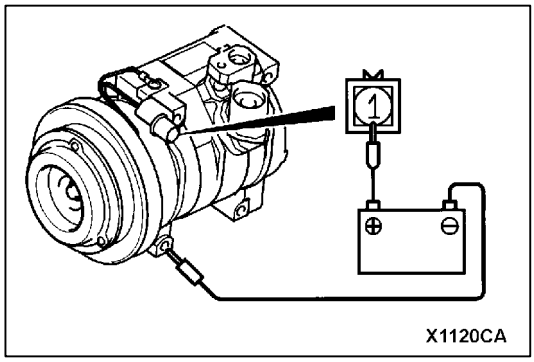


## MAGNETIC CLUTCH TEST

1. Disconnect the connector (1-pin) to the magnetic clutch.
2. Connect battery (+) voltage directly to the connector for the magnetic clutch.
3. If the magnetic clutch is normal, there will be “click”. If the pulley and armature do not make contact (‘click’), there is a malfunction.

## RECEIVER DRIER TEST

Operate the unit and check the piping temperature by touching the receiver drier outlet and inlet.
If there is a difference in the temperatures, the receiver drier is restricted.
Replace the receiver drier.

## COMPRESSOR DRIVE BELT ADJUSTMENT

Refer to GROUP 11 - On-vehicle Service.

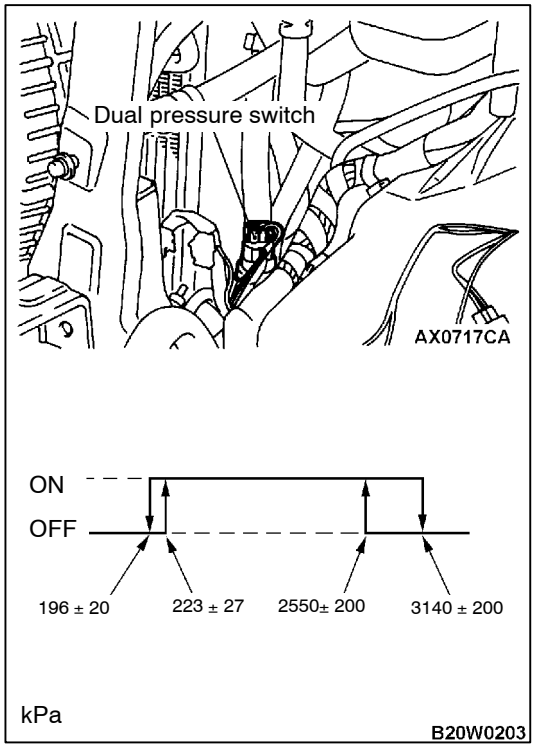


## DUAL PRESSURE SWITCH CHECK

1. Remove the dual pressure switch connector and connect the high/low pressure side terminals located on the harness side as shown in the illustration.
2. Install a gauge manifold to the high-pressure side service valve of the refrigerant line. (Refer to Performance Test.)
3. When the high/low pressure sides of the dual pressure switch are at operation pressure (ON) and there is continuity between the respective terminals, then the condition is normal. If there is no continuity, replace the switch.

Purchased from www.WorkshopManuals.co.uk

www.WorkshopManuals.co.uk

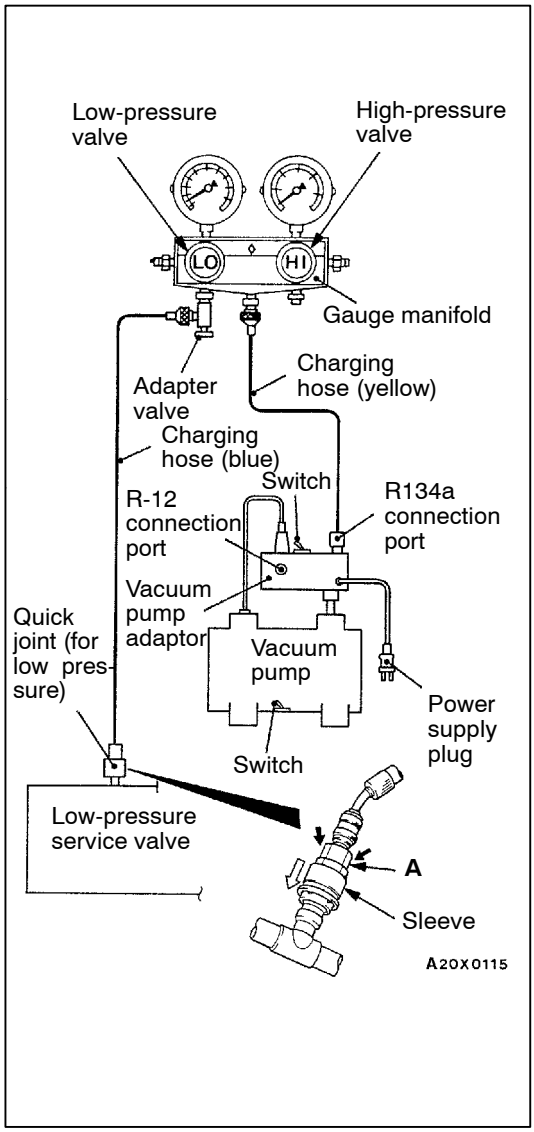


## CHARGING

1. With the handles turned back all the way (valve closed), install the adaptor valve to the low-pressure side of the gauge manifold.
2. Connect the charging hose (blue) to the adaptor valve.
3. Connect the quick joint (for low-pressure) to the charging hose (blue).
4. Connect the quick joint (for low-pressure) to the low-pressure service valve.

   NOTE
   The low-pressure service valve should be connected to the suction hose.

   **Caution**
   **(1) Use tools that are suited to R134a.**
   **(2) To install the quick joint, press section "A" firmly against the service valve until a click is heard. When connecting, run your hand along the hose while pressing to ensure that there are no bends in the hose.**

5. Close the high and low-pressure valves of the gauge manifold.
6. Install the vacuum pump adaptor to the vacuum pump.
7. Connect the vacuum pump plug to the vacuum pump adaptor.
8. Connect the charging hose (yellow) to the R134a connection port of the vacuum pump adaptor.
9. Tighten the adaptor valve handle (valve open).
10. Open the low-pressure valve of the gauge manifold.
11. Turn the power switch of the vacuum pump to the ON position.

    NOTE
    Even if the vacuum pump power switch is turned ON, the vacuum pump will not operate because of the power supply connection in step (7).

Purchased from www.WorkshopManuals.co.uk

www.WorkshopManuals.co.uk

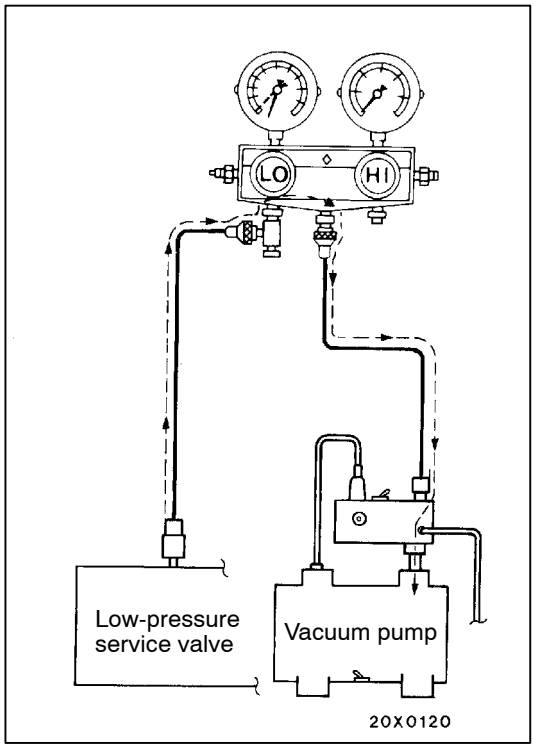


12. Turn the vacuum pump adaptor switch to the R134a side to start the vacuum pump.

    **Caution**
    **Do not operate the compressor for evacuation.**

13. Evacuate to a vacuum reading of 100 kPa or higher (takes approx. 10 minutes).
14. Turn the vacuum pump adaptor switch OFF and allow to stand it for 5 minutes.

    **Caution**
    **Do not operate the compressor in the vacuum condition; damage may occur.**

15. Carry out a leak test. (Good if the negative pressure does not drop.)

    **Caution**
    **If the negative pressure drops, increase the tightness of the connections, and then repeat the evacuation procedure from step (12).**

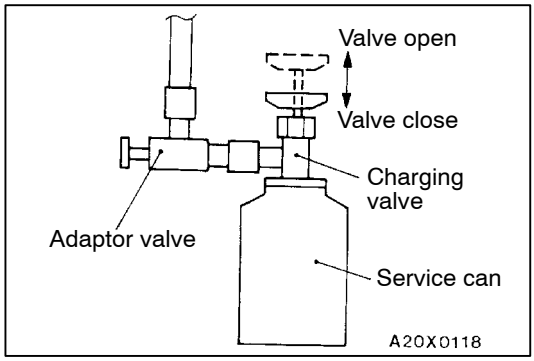


16. With the handle turned back all the way (valve open), install the charging valve to the service can.
17. Turn the handle of the adaptor valve back all the way (valve closed), remove it from the gauge manifold and install the service can.
18. Tighten the handle of the charging valve (valve closed) to puncture the service can.

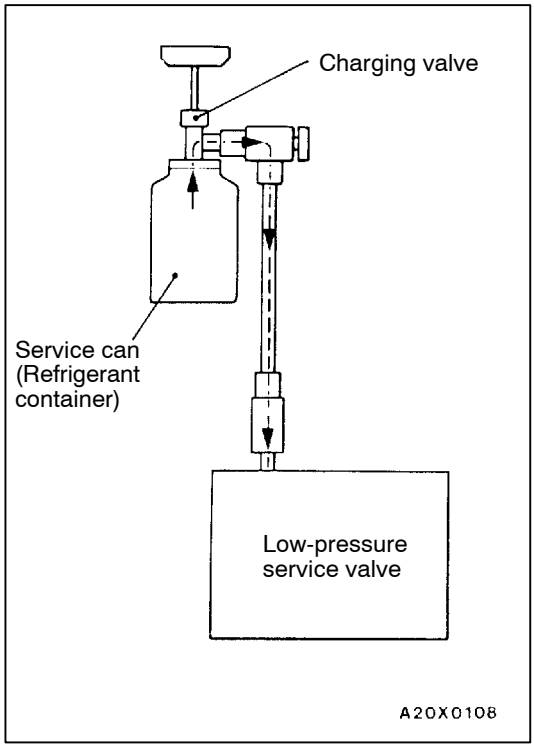


19. Turn the handle of the charging valve back (valve open) and tighten the handle of the adaptor valve (valve open) to charge the system with refrigerant.

    **Caution**
    **If the service can is inverted, liquid refrigerant may be drawn into the compressor damaging it by liquid compression. Keep the service can upright to ensure that refrigerant is charged in gas state.**

20. If the refrigerant is not drawn in, turn the handle of the adaptor valve back all the way (valve closed).
21. Check for gas leaks using a leak detector.
    If a gas leak is detected, re-tighten the connections, and then repeat the charging procedure from evacuation in step (12).

    **Caution**
    **The leak detector for R134a should be used.**

22. Start the engine.
23. Operate the A/C and set to the lowest temperature (MAX. COOL).

Purchased from www.WorkshopManuals.co.uk

www.WorkshopManuals.co.uk

24. Fix the engine speed at 1,500 r/min.
25. Tighten the handle of the adaptor valve (valve open) to charge the required volume of refrigerant.

    **Caution**
    **If the service can is inverted, liquid refrigerant may be drawn into the compressor damaging it by liquid compression. Keep the service can upright to ensure that refrigerant is charged in gas state.**

26. After charging with refrigerant, turn the handle of the adaptor valve back all the way (valve closed).
27. Tighten the charging valve handle (valve closed). Remove the quick joint (for low-pressure) from the low-pressure service valve.

    NOTE
    If the service can is not emptied completely, keep the handles of the charging valve and adaptor valve closed for the next charging.

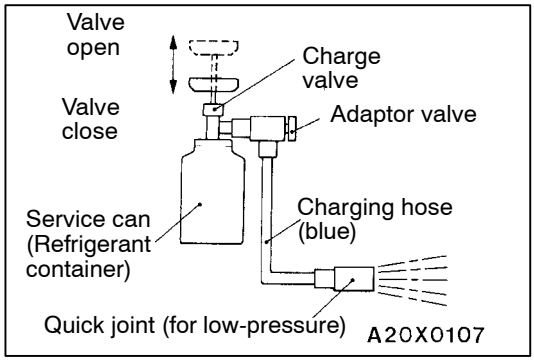


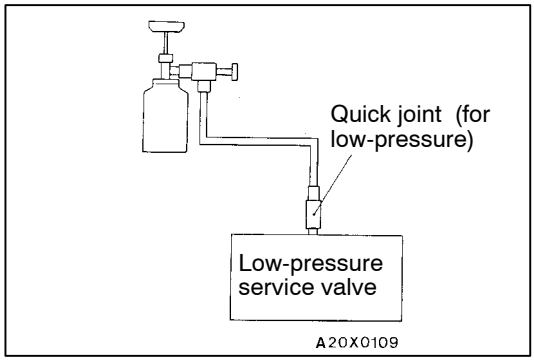


**CORRECTING LOW REFRIGERANT LEVEL IN CASE THE SERVICE CAN IS USED.**

1. Install the charge valve with the handle turned all the way back (valve open) to the service can.
2. Install the adaptor valve with the handle turned all the way back (valve close) to the charging valve.
3. Connect the charging hose (blue) to the adaptor valve.
4. Connect the charging hose (blue) to the quick joint (for low-pressure).
5. Tighten the handle of the charge valve (valve close), and pierce the service can.
6. Turn the handle of the adaptor valve to bleed the air.
7. Install the quick joint (for low-pressure) to the low-pressure service valve.

   NOTE
   The low-pressure service valve should be connected to the suction hose.

Purchased from www.WorkshopManuals.co.uk

www.WorkshopManuals.co.uk

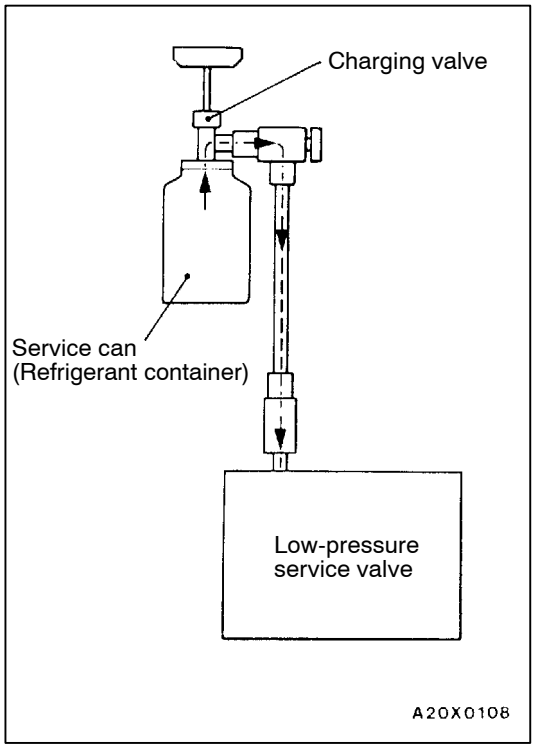


8. Start the engine.
9. Operate the air conditioner and set at the lowest temperature (MAX. COOL).
10. Fix the engine speed at 1,500 r/min.
11. Tighten the handle of the adaptor valve (valve open), and replenish refrigerant while checking the quantity through the sight glass.

    **Caution**
    **If the service can is inverted, liquid refrigerant may be draw into the compressor damaging it by liquid compression. Keep the service can upright to ensure that refrigerant is changed in gas state.**

12. After replenishing is completed, turn the handle of the adaptor valve all the way back (valve close), and remove the quick joint.

    NOTE
    When there is remainder of refrigerant in the service can, keep it for next use with the charge value and the valve of the adaptor valve being closed.

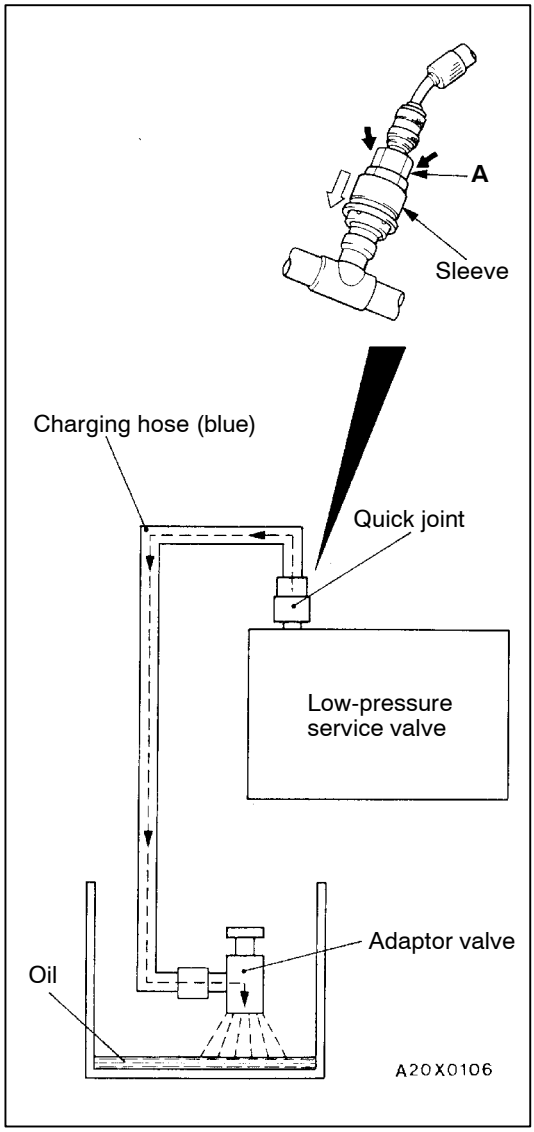


**DISCHARGING SYSTEM**

1. Run the engine at an engine speed of 1,200 - 1,500 r/min for approximately 5 minutes with the A/C operating to return to the oil.

   NOTE
   Returning the oil will be more effective if it is done while driving.

2. Stop the engine.
3. Connect the charging hose (blue) to the adaptor valve with its handle turned back all the way (valve closed).
4. Connect the quick joint to the charging hose (blue).
5. Install the quick joint to the low-pressure service valve.

   NOTE
   The low-pressure service valve should be connected to the suction hose.

   **Caution**
   **To connect the quick joint, press section "A" firmly against the service valve until a click is heard. When connecting, run your hand along the hose while pressing to ensure that there are no bends in the hose.**

6. Place the adaptor valve inside the container and discharge the refrigerant by opening the handle gradually so that oil does not gush out.

   NOTE
   Any oil remaining in the container should be returned to the A/C system.

Purchased from www.WorkshopManuals.co.uk

www.WorkshopManuals.co.uk

### REFILLING OF OIL IN THE A/C SYSTEM

Too little oil will provide inadequate compressor lubrication and cause a compressor failure. Too much oil will increase discharge air temperature.
When a compressor is installed at the factory, it contains 120 mL of refrigerant oil. While the A/C system is in operation, the oil is carried through the entire system by the refrigerant. Some of this oil will be trapped and retained in various parts of the system.
When the following system components are changed, it is necessary to add oil to the system to replace the oil being removed with the component.

**Compressor oil: DENSO OIL 8**

**Quantity**
- **Condenser: 10 mL**
- **Evaporator: 40 mL**
- **Suction hose: 6.5 mL**

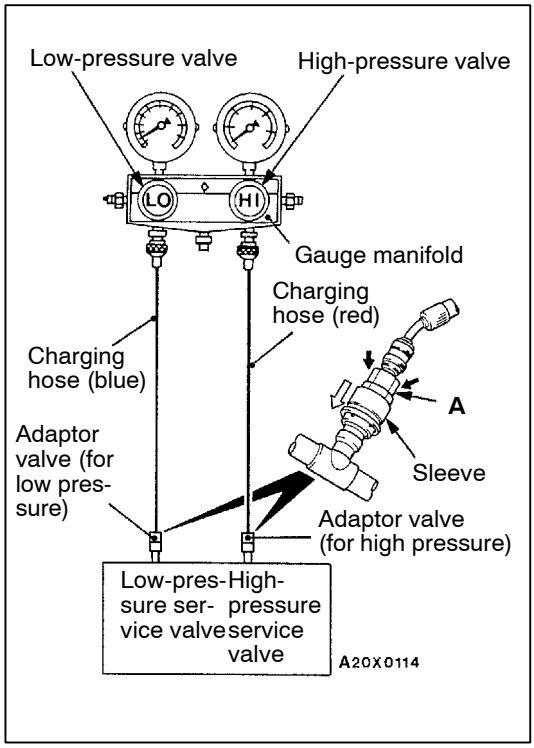


## PERFORMANCE TEST

1. The vehicles to be tested should be in a place that is not in direct sunlight.
2. Close the high and low-pressure valve of the gauge manifold.
3. Connect the charging hose (blue) to the low-pressure valve and connect the charging hose (red) to the high-pressure valve of the gauge manifold.
4. Install the quick joint (for low-pressure) to the charging hose (blue), and connect the quick joint (for high-pressure) to the charging hose (red).
5. Connect the quick joint (for low-pressure) to the low-pressure service valve and connect the quick joint (for high-pressure) to the high-pressure service valve.

   NOTE
   The high-pressure service valve is on liquid pipe A and the low-pressure service valve is on the suction hose.

   **Caution**
   **To connect the quick joint, press section "A" firmly against the service valve until a click is heard.**
   **When connecting, run your hand along the hose while pressing to ensure that there are no bends in the hose.**
6. Start the engine.

Purchased from www.WorkshopManuals.co.uk

www.WorkshopManuals.co.uk

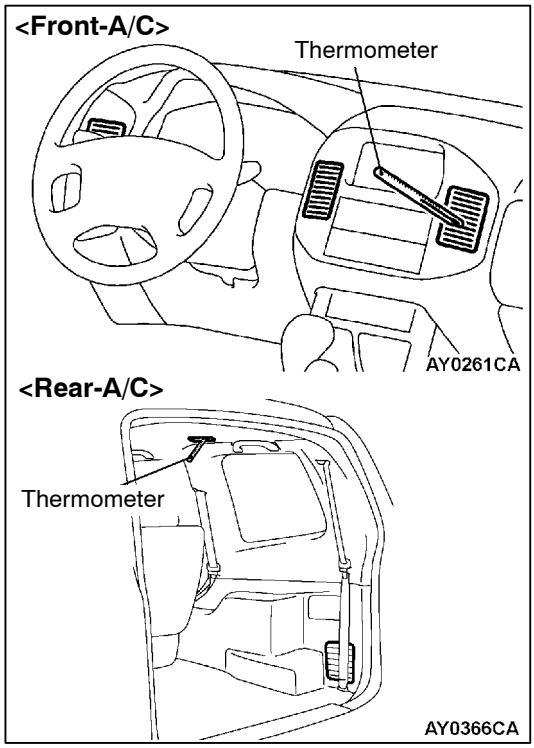


7. Set the controls to the A/C as follows:
   <Testing the front-A/C>
   - A/C switch: A/C - ON position
   - Mode selection: Face position
   - Temperature control: Max. cooling position
   - Air selection: Recirculation position
   - Blower switch: HI (Fast) position

   <Testing the rear-A/C>
   - The front A/C should be set as above.
   - A/C switch: A/C - ON position
   - Temperature control: Max. cooling position
   - Blower switch: HI (Fast) position
8. Adjust engine speed to 1,000 r/min with A/C clutch engaged.
9. Engine should be warmed up with doors and windows closed.
10. Insert a thermometer in the center A/C outlet and operate the engine for 20 minutes.
11. Note the discharge air temperature.

    NOTE
    If the clutch cycles, take the reading before the clutch disengages.

**Performance Temperature Chart**
**<Front-A/C test>**

| | | | | |
|---|---|---|---|---|
| Garage ambient temperature °C | 20 | 25 | 35 | 40 |
| Discharge air temperature °C | 3.5 - 5.5 | 3.5 - 5.5 | 4.5 - 6.5 | 5.5 - 7.5 |
| Compressor high-pressure kPa | 1,050 - 1,250 | 1,050 - 1,250 | 1,400 - 1,600 | 1,650 - 1,850 |
| Compressor low-pressure kPa | 120 - 140 | 120 - 140 | 130 - 150 | 160 - 180 |

**Performance Temperature Chart**
**<Rear-A/C test>**

| | | | | |
|---|---|---|---|---|
| Garage ambient temperature °C | 20 | 25 | 35 | 40 |
| Discharge air temperature °C | 5.5 - 7.5 | 5.5 - 7.5 | 6.5 - 8.5 | 7.5 - 9.5 |
| Compressor high-pressure kPa | 1,150 - 1,350 | 1,150 - 1,350 | 1,500 - 1,700 | 1,750 - 1,950 |
| Compressor low-pressure kPa | 130 - 150 | 130 - 150 | 140 - 160 | 180 - 200 |

Purchased from www.WorkshopManuals.co.uk

www.WorkshopManuals.co.uk

## REFRIGERANT LEAK REPAIR

### LOST CHARGE

If the system has lost all charge due to a leak:
1. Evacuate the system. (See procedure.)
2. Charge the system with approximately one pound of refrigerant.
3. Check for leaks.
4. Discharge the system.
5. Repair leaks.
6. Replace receiver drier.

   **Caution**
   **Replacement filter-drier units must be sealed while in storage. The drier used in these units will saturate water quickly upon exposure to the atmosphere. When installing a drier, have all tools and supplies ready for quick reassembly to avoid keeping the system open any longer than necessary.**

7. Evacuate and charge system.

### LOW CHARGE

If the system has not lost all of its refrigerant charge; locate and repair all leaks. If it is necessary to increase the system pressure to find the leak (because of an especially low charge) add refrigerant. If it is possible to repair the leak without discharging the refrigerant system, use the procedure for correcting low refrigerant level.

### HANDLING TUBING AND FITTINGS

Kinks in the refrigerant tubing or sharp bends in the refrigerant hose lines will greatly reduce the capacity of the entire system. High pressures are produced in the system when it is operating. Extreme care must be exercised to make sure that all connections are pressure tight. Dirt and moisture can enter the system when it is opened for repair or replacement of lines or components. The following precautions must be observed. The system must be completely discharged before opening any fitting of connection in the refrigeration system. Open fittings with caution even after the system has been discharged. If any pressure is noticed as a fitting is loosened, allow trapped pressure to bleed off very slowly.
Never attempt to rebend formed lines to fit. Use the correct line for the installation you are servicing. A good rule for the flexible hose lines is keep the radius of all bends at least 10 times the diameter of the hose.
Sharper bends will reduce the flow of refrigerant. The flexible hose lines should be routed so that they are at least 80 mm from the exhaust manifold. It is good practice to inspect all flexible hose lines at least once a year to make sure they are in good condition and properly routed.
Unified plumbing connections with O-rings, these O-rings are not reusable.

## COMPRESSOR NOISE

You must first know the conditions when the noise occurs. These conditions are: weather, vehicle speed, in gear or neutral, engine temperature or any other special conditions.
Noises that develop during A/C operation can often be misleading. For example: what sounds like a failed front bearing or connecting rod, may be caused by loose bolts, nuts, mounting brackets, or a loose clutch assembly. Verify accessory drive belt tension (power steering or alternator).
Improper accessory drive belt tension can cause a misleading noise when the compressor is engaged and little or no noise when the compressor is disengaged.
Drive belts are speed-sensitive. That is, at different engine speeds, and depending upon belt tension, belts can develop unusual noises that are often mistaken for mechanical problems within the compressor.

### ADJUSTMENT

1. Select a quiet area for testing. Duplicate conditions as much as possible. Switch compressor on and off several times to clearly identify compressor noise. To duplicate high ambient conditions (high head pressure), restrict air flow through condenser. Install manifold gauge set to make sure discharge pressure doesn't exceed 2,070 kPa.
2. Tighten all compressor mounting bolts, clutch mounting bolt, and compressor drive belt. Check to assure clutch coil is tight (no rotation or wobble).
3. Check refrigerant hoses for rubbing or interference that can cause unusual noises.
4. Check refrigerant charge. (See "Charging System".)
5. Recheck compressor noise as in Step 1.
6. If noise still exists, loosen compressor mounting bolts and retorque. Repeat Step 1.
7. If noise continues, replace compressor and repeat Step 1.

Purchased from www.WorkshopManuals.co.uk

www.WorkshopManuals.co.uk

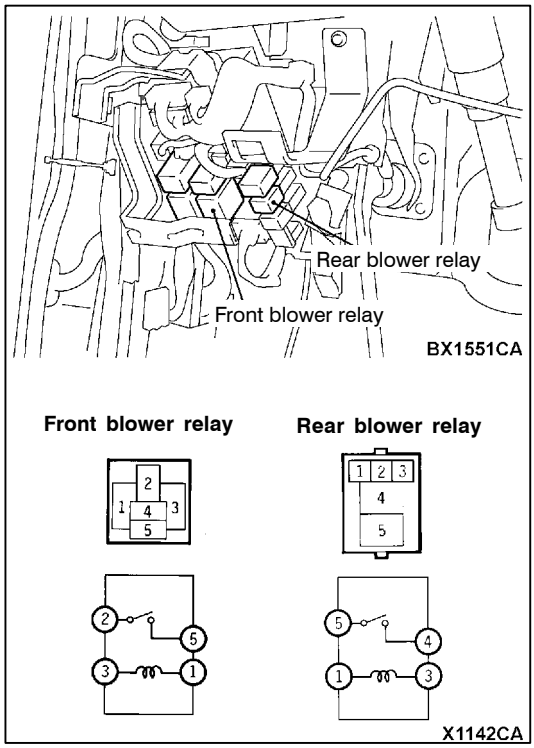


## FRONT BLOWER RELAY AND REAR BLOWER RELAY CONTINUITY CHECK <Vehicles with rear cooler>

### FRONT BLOWER RELAY

| System voltage | Terminal No. | | | |
|---|---|---|---|---|
| | 1 | 3 | 2 | 5 |
| When current is not supplied | ○ | ○ | | |
| When current is supplied | ⊕ | ⊖ | ○ | ○ |

### REAR BLOWER RELAY

| System voltage | Terminal No. | | | |
|---|---|---|---|---|
| | 1 | 3 | 4 | 5 |
| When current is not supplied | ○ | ○ | | |
| When current is supplied | ⊕ | ⊖ | ○ | ○ |

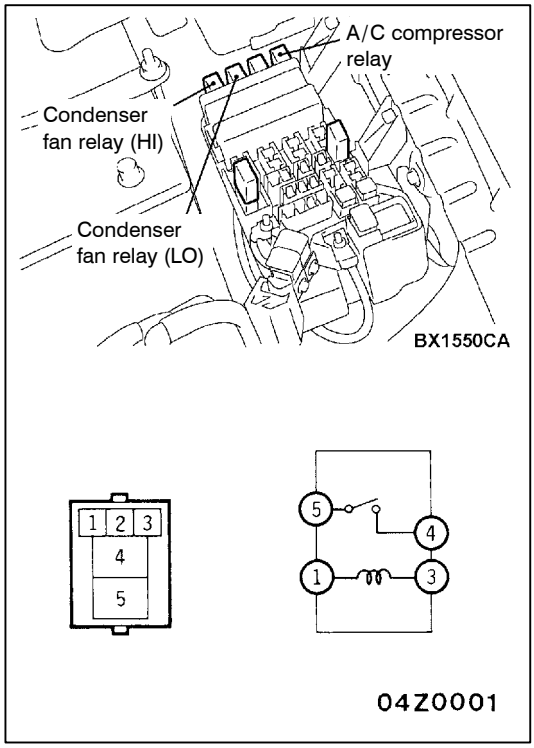


## CONTINUITY CHECK OF A/C COMPRESSOR RELAY AND CONDENSER FAN RELAY

| System voltage | Terminal No. | | | |
|---|---|---|---|---|
| | 1 | 3 | 4 | 5 |
| When current is not supplied | ○ | ○ | | |
| When current is supplied | ⊕ | ⊖ | ○ | ○ |

Purchased from www.WorkshopManuals.co.uk

www.WorkshopManuals.co.uk

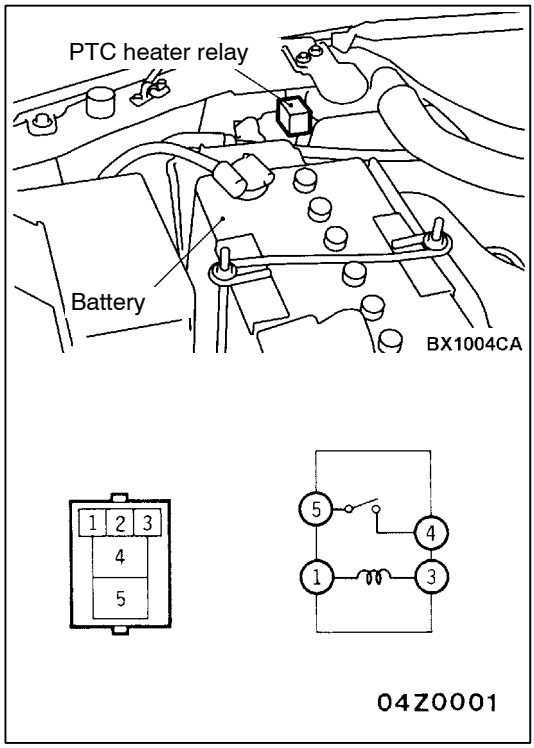


## PTC HEATER RELAY CONTINUITY CHECK <4M41>

| System voltage | Terminal No. | | | |
|---|---|---|---|---|
| | 1 | 3 | 2 | 5 |
| When current is not supplied | ○ | ○ | | |
| When current is supplied | ⊕ | ⊖ | ○ | ○ |

NOTE
The PTC heater is located at the heater core.

## IDLE-UP OPERATION CHECK <Diesel>

1. Set the vehicle in the pre-inspection condition:
2. Check that the idle speed is within the standard value.

   **Standard value:**
   **<4D56>750 ± 100 r/min**
   **<4M41>750 ± 50 r/min**

   NOTE
   The idle speed is controlled by the engine-ECU and should not be adjusted.

3. The idle speed should be within the standard value when the A/C switch is turned on and the A/C is operating.

   **Standard value:**
   **<4D56> 925 ± 25 r/min**
   **<4M41: When the A/C is under low medium load>**
   **800 ± 50 r/min**
   **<4M41: When the A/C is under high load>**
   **1,000 ± 50 r/min**

4. When the front A/C is set as follows, the idle speed should be within the standard value.
   Blower switch: ON
   Air outlet temperature: FOOT, FOOT/DEF, DEF
   Set temperature: MAX. HOT (32°C)
   Heat switch: ON

Purchased from www.WorkshopManuals.co.uk

www.WorkshopManuals.co.uk

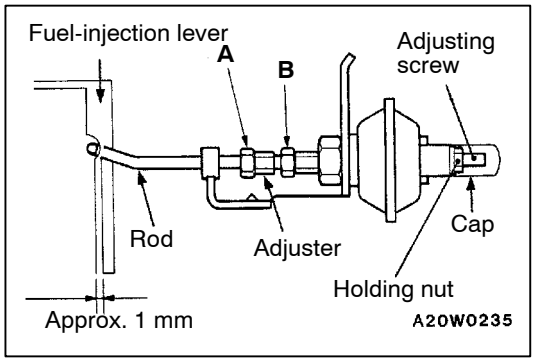


5. If there is a deviation of the idling speed from the standard value, adjust the idling speed by the following the procedures.<4D56>
   (1) Loosen nuts (A) and (B).
   (2) Adjust, by using the adjuster, so that the end of the vacuum actuator's rod is at the position indicated in the illustration.
   (3) Securely tighten nuts (A) and (B).
   (4) After activating the vacuum actuator, check to be sure that the rod and the lever do not contact when the activation is cancelled.
   (5) Remove the cap and loosen the nut for holding.
   (6) Adjust to the specified r/min by turning the adjusting screw.
   (7) Securely tighten the holding nut, and then attach the cap.

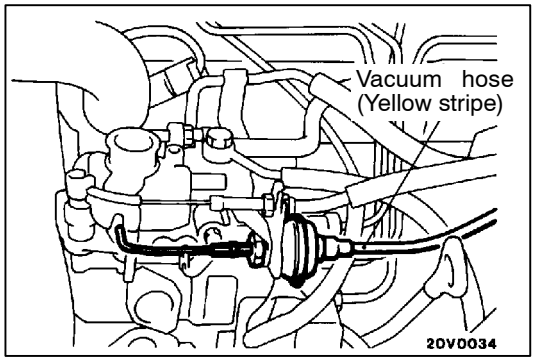


## VACUUM ACTUATOR CHECK <Diesel-powered Vehicles>

1. Pull off the vacuum hose (yellow stripe) connected to the vacuum actuator.

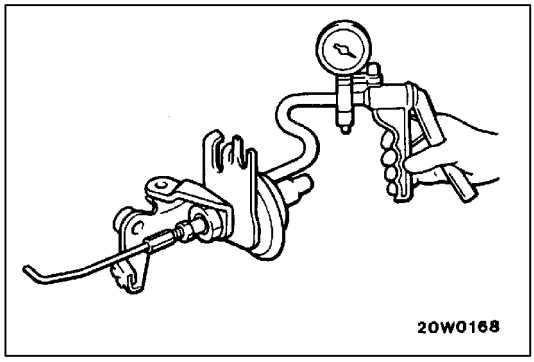


2. Connect a manual vacuum pump to the nipple of the vacuum actuator.
3. Check to be sure that the vacuum actuator rod starts to contact when 8 kPa of negative pressure is applied, and that the rod contracts to its full stroke when 12 kPa of negative pressure is applied.
4. Disconnect the manual vacuum pump from the vacuum actuator, and connect the vacuum hose (yellow stripe) to the vacuum actuator.

Purchased from www.WorkshopManuals.co.uk

www.WorkshopManuals.co.uk

5. Start the engine and let it run at idle. Then cover the end of the vacuum hose (yellow stripe) with a finger and check the negative pressure when the A/C switch is turned on and off.

| A/C switch | Negative pressure at hose end |
|---|---|
| OFF | NO |
| ON | YES |

**Caution**
**Be careful, when connecting the vacuum hose not to damage it.**

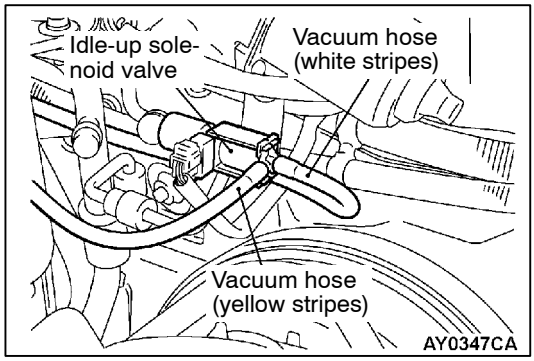


## IDLE-UP SOLENOID VALVE CHECK <Diesel-powered vehicles>

1. Disconnect the vacuum hoses (white stripes, yellow stripes) from the solenoid valve.
2. Disconnect the harness connector.

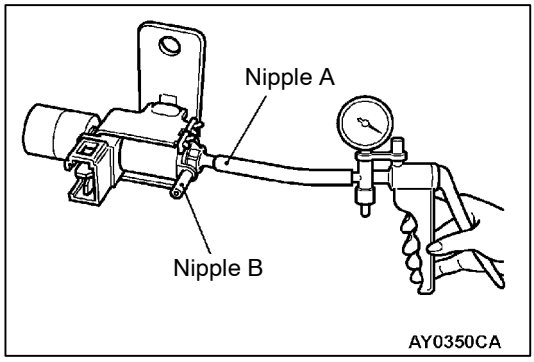


3. Connect a manual vacuum pump to the nipple A.

Purchased from www.WorkshopManuals.co.uk

www.WorkshopManuals.co.uk

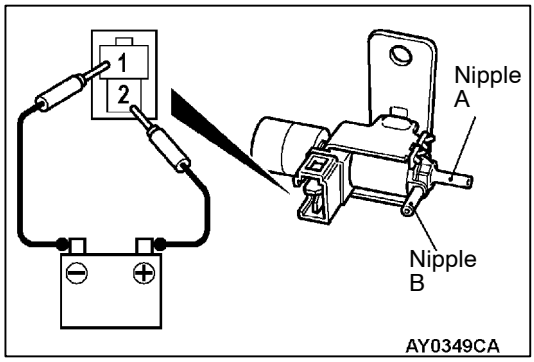


4. Check air-tightness by applying a vacuum with voltage applied directly from the battery to the solenoid valve terminal and without applying voltage.

| Battery voltage | Nipple B | Vacuum condition |
|---|---|---|
| Applied | Open | Vacuum leaks from nipple B |
| | Blocked with finger *1 | Vacuum is maintained |
| Not applied | Open | Vacuum is maintained |
| | Blocked with finger *2 | |

NOTE
In case of mark *1, a vacuum can be felt but in case of mark *2, a vacuum can not be felt.

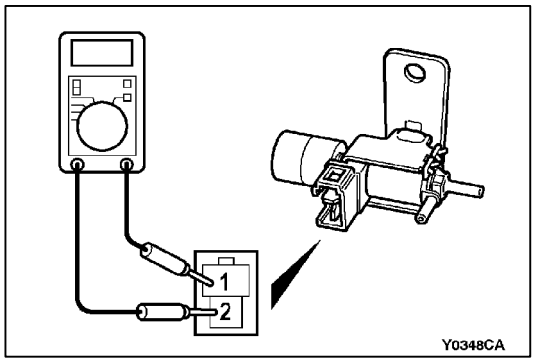


5. Measure the resistance of the solenoid valve.

   **Standard value: Approx. 40 Ω**

6. When disconnecting the vacuum hose, always make a mark so that the hose can be reconnected at original position.

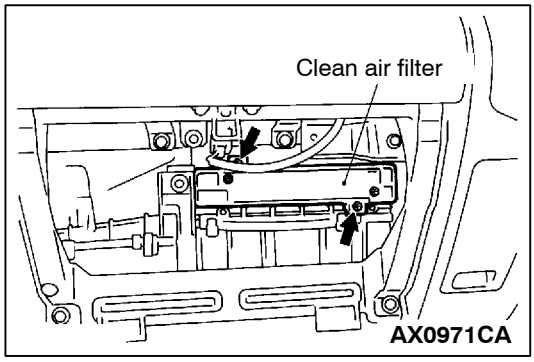


## CLEAN AIR FILTER REPLACEMENT PROCEDURE

1. Remove the glove box. (Refer to GROUP 52A - Instrument Panel.)
2. Remove the two screws as shown, and replace the clean air filter.
3. Remove the clean air filter.
4. Install the glove box.

Purchased from www.WorkshopManuals.co.uk

www.WorkshopManuals.co.uk

# FRONT A/C

## AIR CONDITIONER CONTROL PANEL ASSEMBLY AND A/C SWITCH REMOVAL AND INSTALLATION

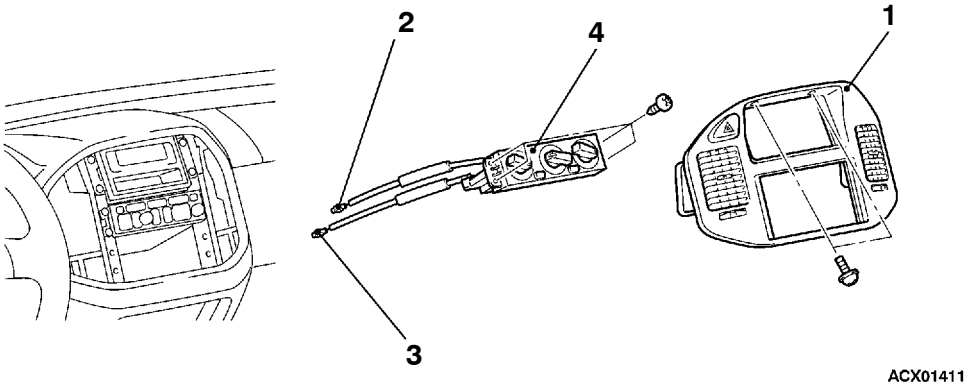


**Removal steps**

- Front floor console (Refer to GROUP 52A.)
- Lower panel (Refer to GROUP 52A - Instrument Panel.)
- Foot duct C
- Foot duct D

▶B◀
▶A◀

1. Center panel (Refer to GROUP 52A - Instrument Panel.)
2. Air mix damper cable connection
3. Air outlet changeover damper cable connection
4. Heater control assembly

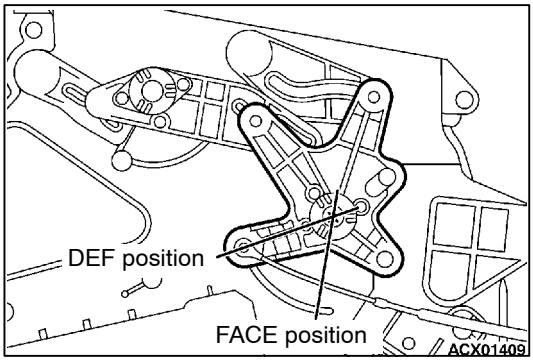


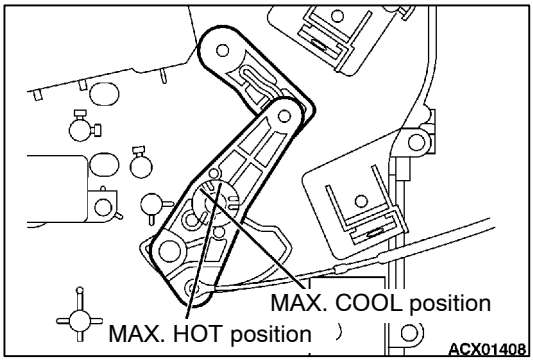


## INSTALLATION SERVICE POINTS

### ▶A◀ AIR OUTLET CHANGEOVER DAMPER CABLE CONNECTION

1. Set the air outlet changeover knob of the heater control assembly to the DEF position.
2. Move the air outlet changeover damper lever to the DEF position (rotate the damper lever counterclockwise fully), and then connect the cable.

### ▶B◀ AIR MIX DAMPER DOOR CABLE CONNECTION

1. Turn the temperature adjusting knob of the heater control assembly to the HOT side fully.
2. Move the air mix door lever of the heater unit to the MAX. HOT position (rotate the damper lever clockwise fully), and then install the cable.

Purchased from www.WorkshopManuals.co.uk

www.WorkshopManuals.co.uk

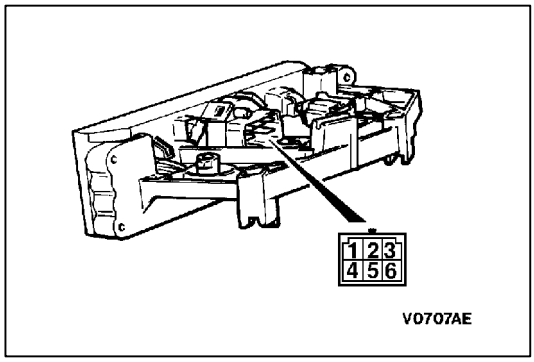


## INSPECTION

### BLOWER SWITCH CONTINUITY CHECK

| Switch position | Terminal No. | | | | |
|---|---|---|---|---|---|
| | 1 | 3 | 4 | 5 | 6 |
| 0 (OFF) | | | | | |
| 1 (LO) | | ○ | —— | ○ | |
| 2 (ML) | ○ | —— ○ | | | |
| 3 (MH) | | ○ | —— | —— | ○ |
| 4 (HI) | | ○ | —— ○ | | |

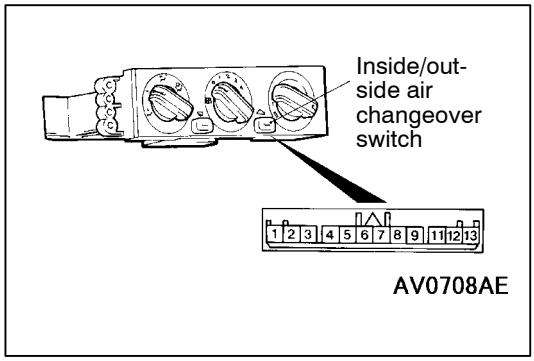


### INSIDE/OUTSIDE AIR CHANGEOVER SWITCH CONTINUITY CHECK

| Switch position | Terminal No. | | | | | | |
|---|---|---|---|---|---|---|---|
| | 1 | IND | 3 | 4 | 5 | 8 | 9 |
| When the switch is not pressed | ○ | —— ⊖ | —— ○ | | | ⊖ ILL | |
| When the switch is pressed | | | | ○ | —— ○ | | |

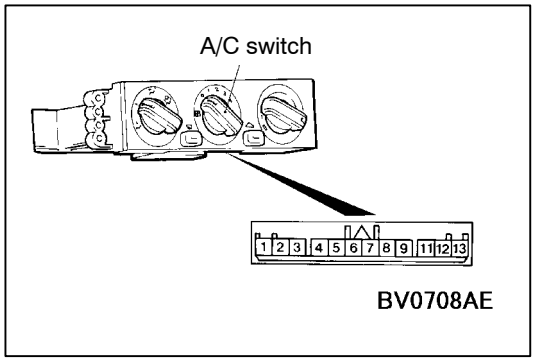


### A/C SWITCH CONTINUITY CHECK

| Switch position | Terminal No. | | | | | | |
|---|---|---|---|---|---|---|---|
| | 1 | IND | 7 | 5 | 6 | 8 | 9 |
| OFF position | ○ | —— ⊖ | —— ○ | | | ⊖ ILL | |
| ON position | | | | ○ | —— ○ | | |

Purchased from www.WorkshopManuals.co.uk

www.WorkshopManuals.co.uk

## DISASSEMBLY AND REASSEMBLY

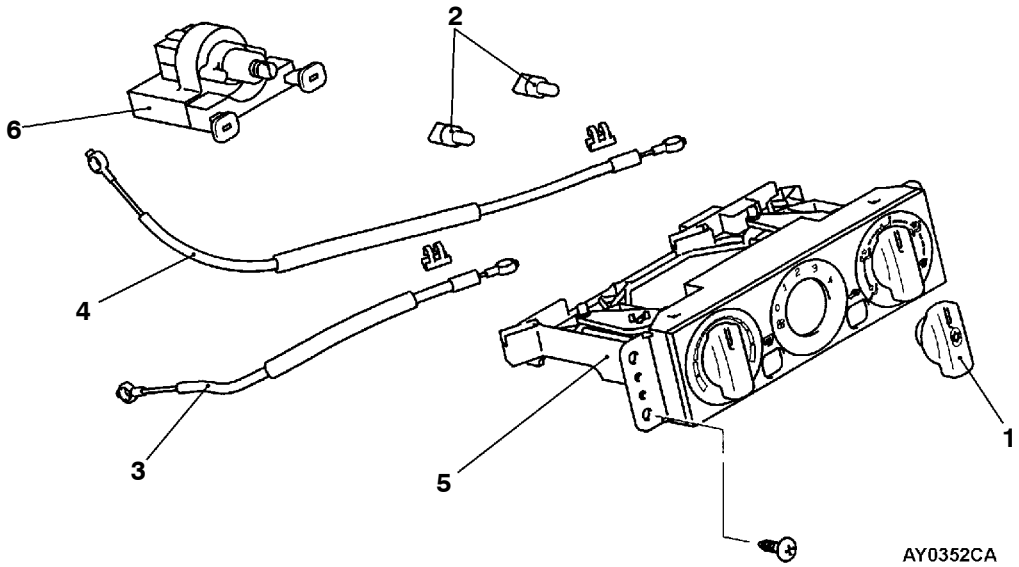


**Disassembly steps**

1. Knob assembly
2. Bulb
◀A▶ 3. Air outlet changeover damper cable
◀A▶ 4. Air mix damper cable
5. Heater control panel
6. Blower switch assembly

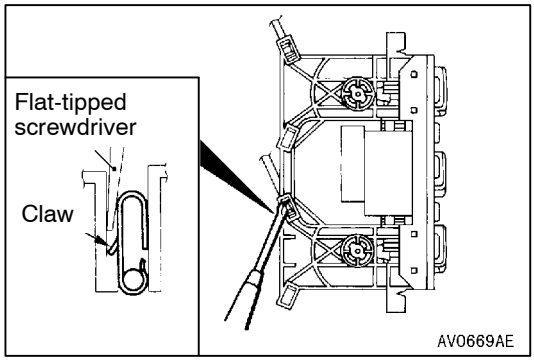


## DISASSEMBLY SERVICE POINT

### ◀A▶ AIR OUTLET CHANGEOVER DAMPER CABLE /AIR MIX DAMPER CABLE DISCONNECTION

Insert a flat-tipped screwdriver into the clip through the inside of the control base, and then prise out the clip claw to disconnect the cables.

Purchased from www.WorkshopManuals.co.uk

www.WorkshopManuals.co.uk

# HEATER UNIT AND BLOWER ASSEMBLY REMOVAL AND INSTALLATION

**Pre-removal and Post-installation Operations**
- Refrigerant Discharge and Refilling (Refer to P.55A-9.)
- Engine Coolant Draining and Refilling (Refer to GROUP 14 - On-vehicle Service.)
- Instrument Panel Removal and Installation (Refer to GROUP 52A.)
- Bolt Securing Steering Column Shaft to Front Deck Crossmember (Refer to GROUP 37A – Steering Wheel and Shaft.)

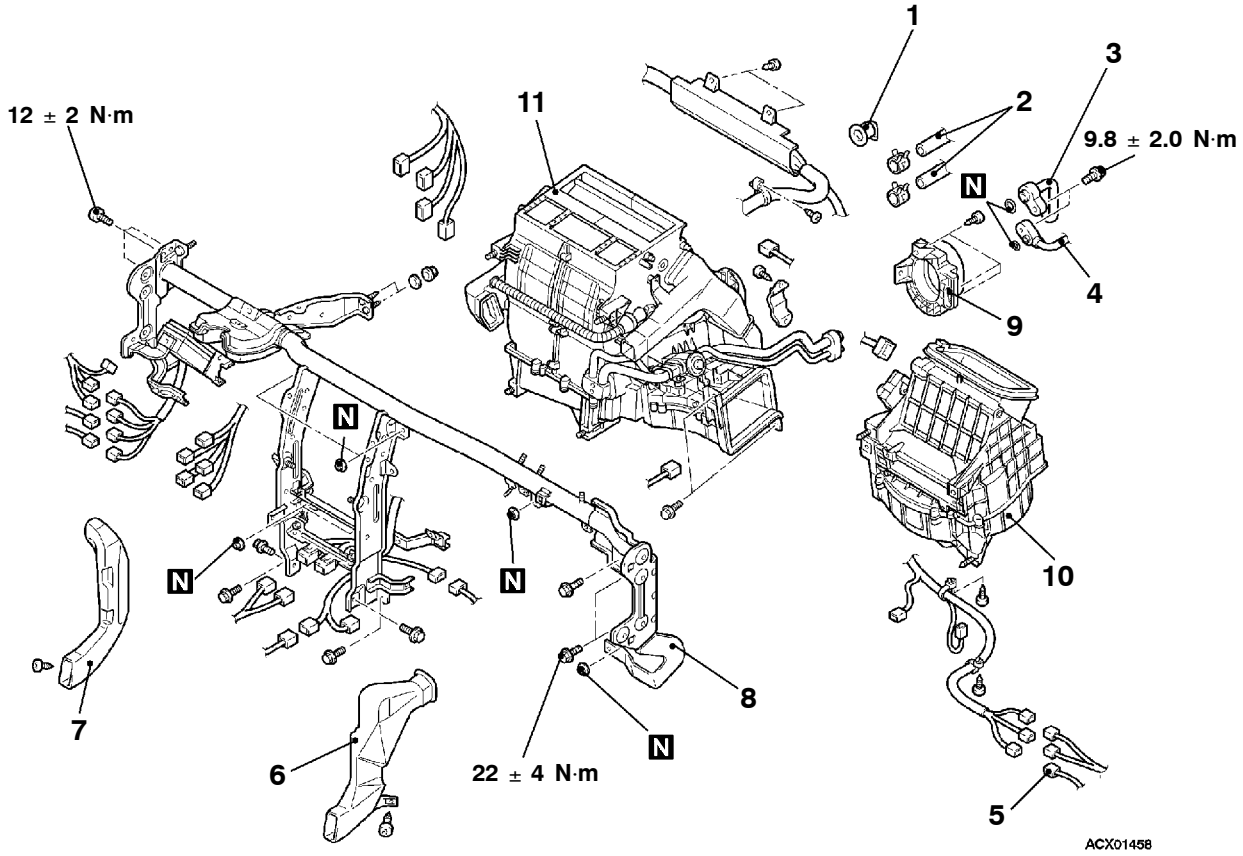


**Removal steps**

1. Drain hose
2. Heater hose connection
3. ◀A▶ Suction flexible hose connection
4. ◀A▶ Liquid pipe A connection
5. Connectors
6. Foot duct B
7. Foot duct
8. Front crossmember assembly
9. Flange bracket
10. Blower assembly
11. Heater unit

## REMOVAL SERVICE POINT

### ◀A▶ SUCTION FLEXIBLE HOSE/LIQUID PIPE A DISCONNECTION

Plug the disconnected hose nipple to prevent dust or foreign material from entering them.

**Caution**

**Use a plug, which air does not penetrate through. Compressor oil and receiver absorb moisture easily.**

Purchased from www.WorkshopManuals.co.uk

www.WorkshopManuals.co.uk

## HEATER UNIT DISASSEMBLY AND REASSEMBLY

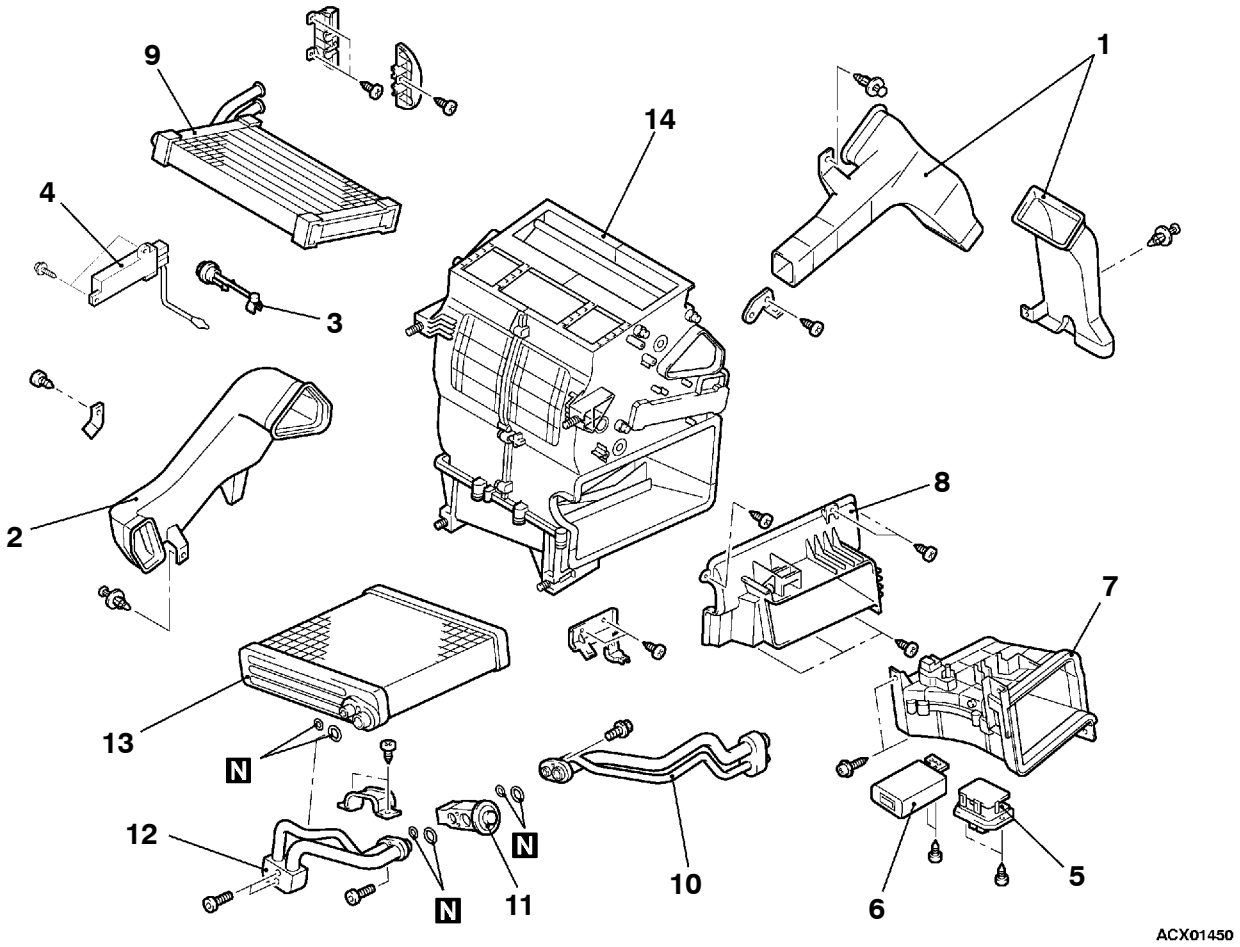


**Disassembly steps**

1. Foot duct A
2. Foot duct C
3. Air thermo sensor clip
4. Automatic compressor-ECU and air thermo sensor assembly
5. Aspirator hose
6. Blower linear controller
7. Rear A/C control unit <Vehicles with dual A/C>
8. Joint duct
9. Air duct sub-assembly
10. Heater core
11. Front pipe assembly
12. Expansion valve
13. Pipe
14. Evaporator
15. Case

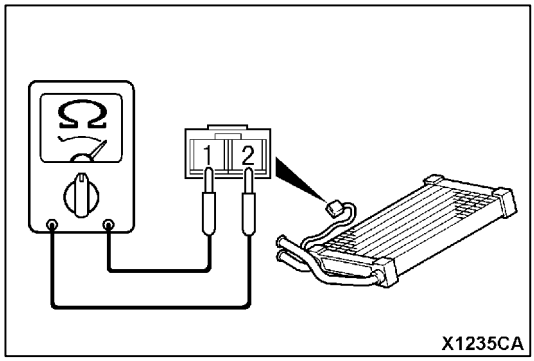


## INSPECTION

### PTC HEATER CHECK <4M41>

Continuity should be present between the terminals.

Purchased from www.WorkshopManuals.co.uk

www.WorkshopManuals.co.uk

## BLOWER ASSEMBLY DISASSEMBLY AND REASSEMBLY

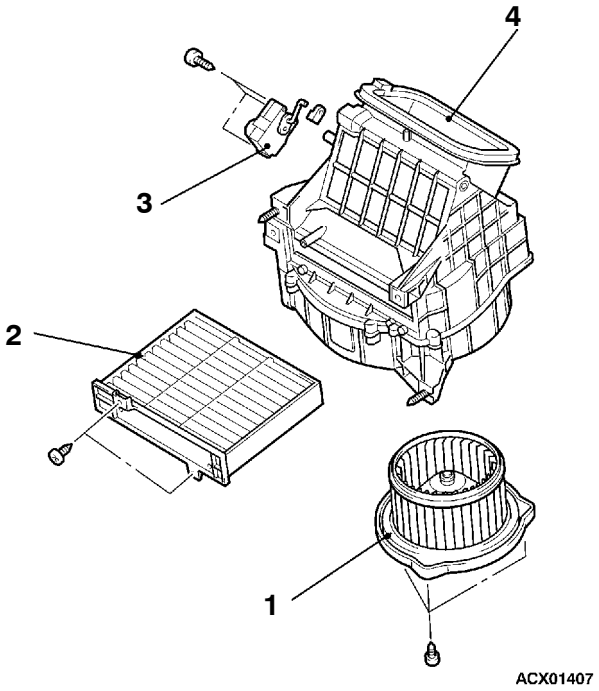


**Disassembly steps**

1. Blower motor
2. Clean air filter <Vehicles with clean air filter>
3. Inside/outside air changeover damper motor
4. Case

Purchased from www.WorkshopManuals.co.uk

www.WorkshopManuals.co.uk

## BLOWER MOTOR AND RESISTOR REMOVAL AND INSTALLATION

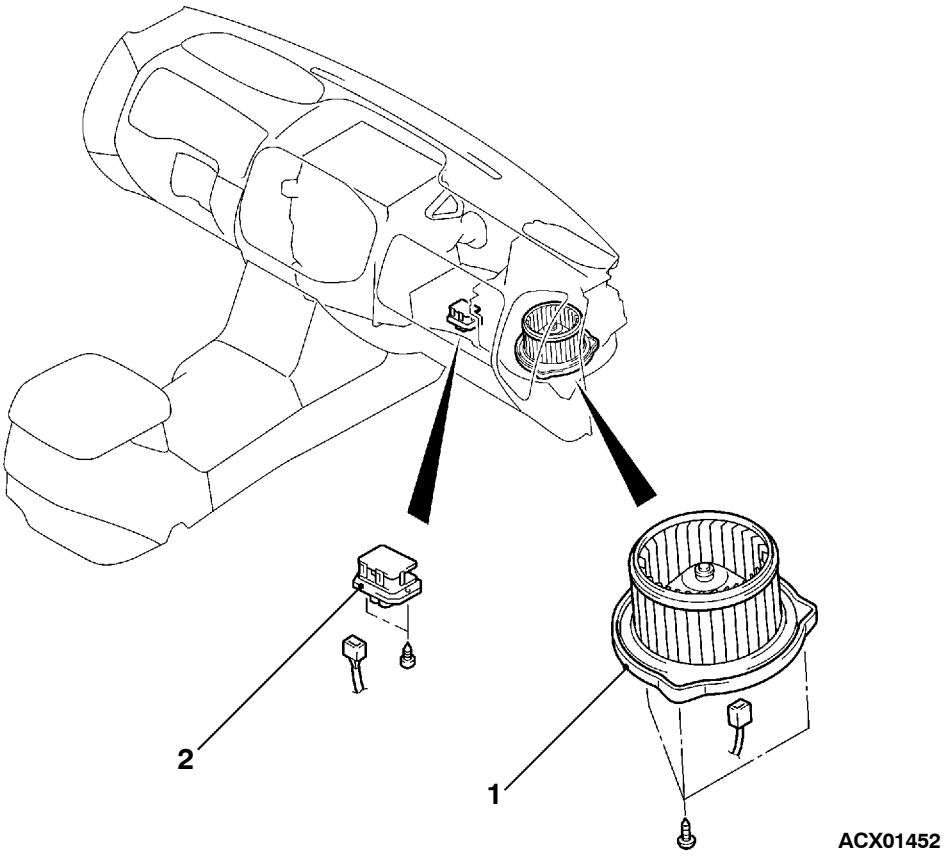


1. Blower motor
2. Resistor

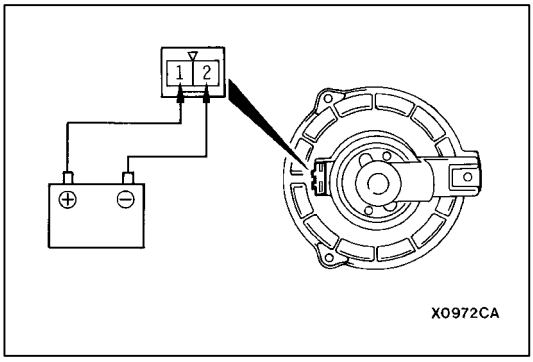


## INSPECTION

### BLOWER MOTOR INSPECTION

The motor should run when battery voltage is applied between the terminals. In addition, any abnormal sound should not be heard from the motor.

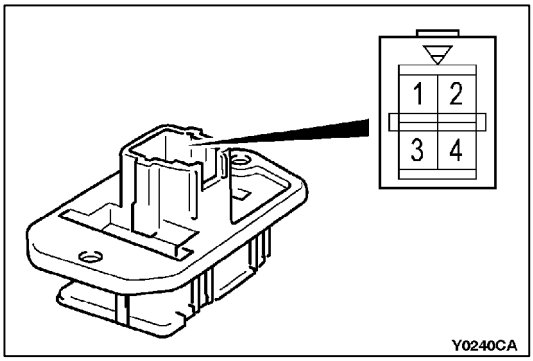


### RESISTOR CHECK

**Standard value:**

| Terminal to be measured | Standard value Ω |
|---|---|
| Between terminals No.3 and 2 | 2.79 ± 7 % |
| Between terminals No.1 and 2 | 1.49 ± 7 % |
| Between terminals No.2 and 4 | 0.39 ± 7 % |

Purchased from www.WorkshopManuals.co.uk

www.WorkshopManuals.co.uk

## INSIDE/OUTSIDE AIR CHANGEOVER DAMPER MOTOR REMOVAL AND INSTALLATION

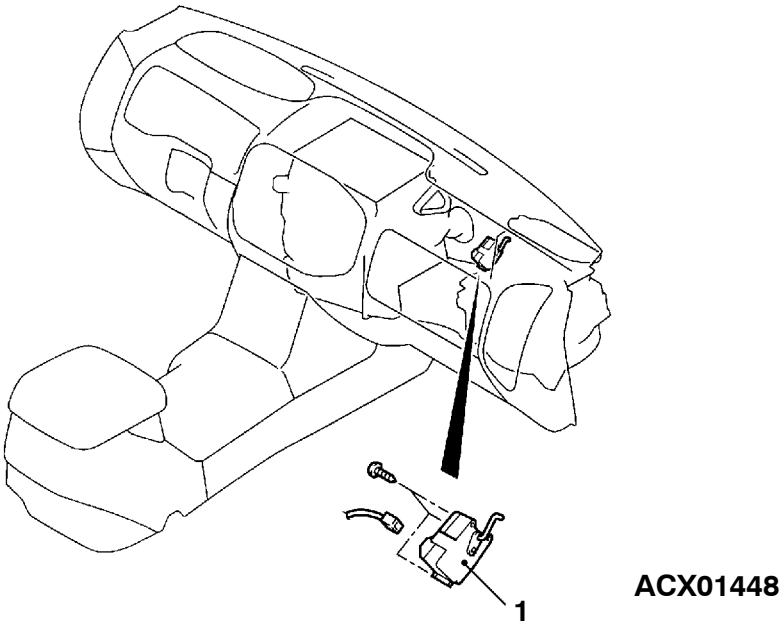


**Removal steps**

- Glove box (Refer to GROUP 52A – Instrument Panel.)

1. Inside/outside air changeover damper motor

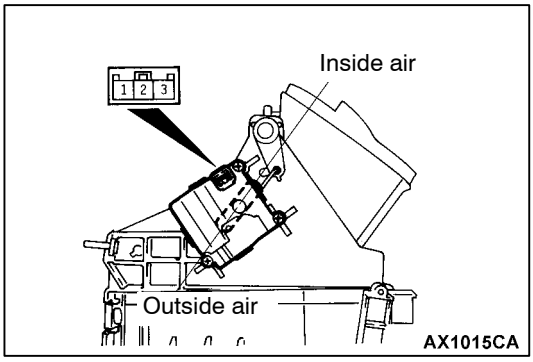


## INSPECTION

### INSIDE/OUTSIDE AIR CHANGEOVER DAMPER MOTOR CHECK

| Battery terminal voltage | | | Lever operation |
|---|---|---|---|
| 1 | 2 | 3 | |
| ⊕ | | ⊖ | Rotate to the inside air recirculation position. |
| ⊕ | ⊖ | | Rotate to the outside air induction position. |

**Caution**

**If the lever reaches the stop position, disconnect the battery voltage.**

Purchased from www.WorkshopManuals.co.uk

www.WorkshopManuals.co.uk

## AUTOMATIC COMPRESSOR-ECU AND AIR THERMO SENSOR ASSEMBLY REMOVAL AND INSTALLATION

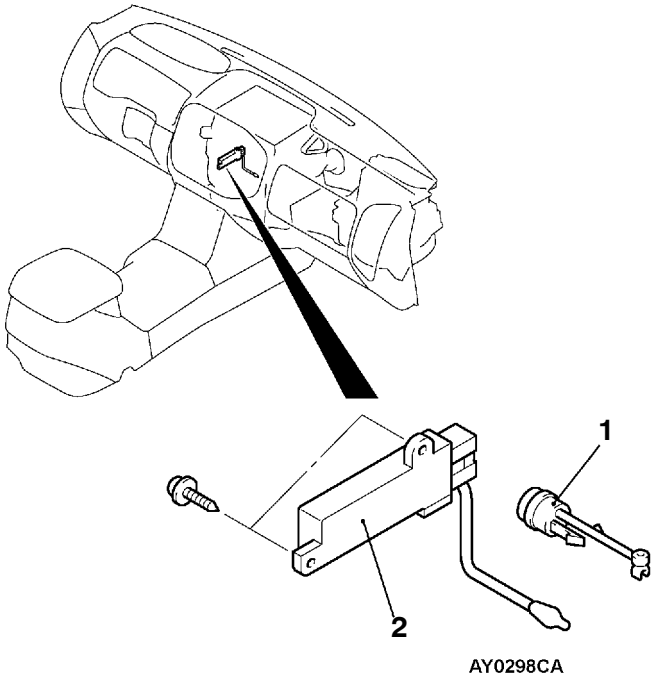


**Removal steps**

- Under cover (Refer to GROUP 52A – Instrument Panel.)

1. Air thermo sensor clip
2. Automatic compressor-ECU and air thermo sensor assembly

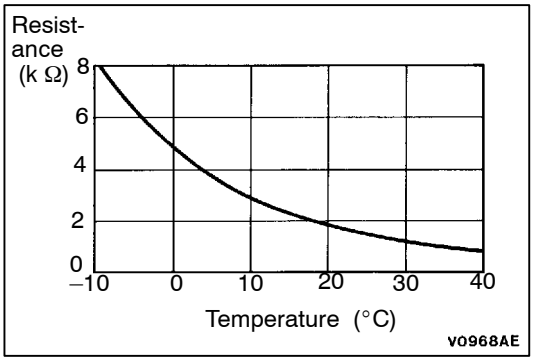


## INSPECTION

### AIR THERMO SENSOR CHECK

Measure the resistance between the sensor terminals under at least two temperatures. The resistance values should meet the left graph.

NOTE
The temperature should be within the shown range.

Purchased from www.WorkshopManuals.co.uk

www.WorkshopManuals.co.uk

# REAR HEATER AND REAR COOLER

## REAR A/C SWITCH, FRONT REAR FAN SWITCH

## REMOVAL AND INSTALLATION

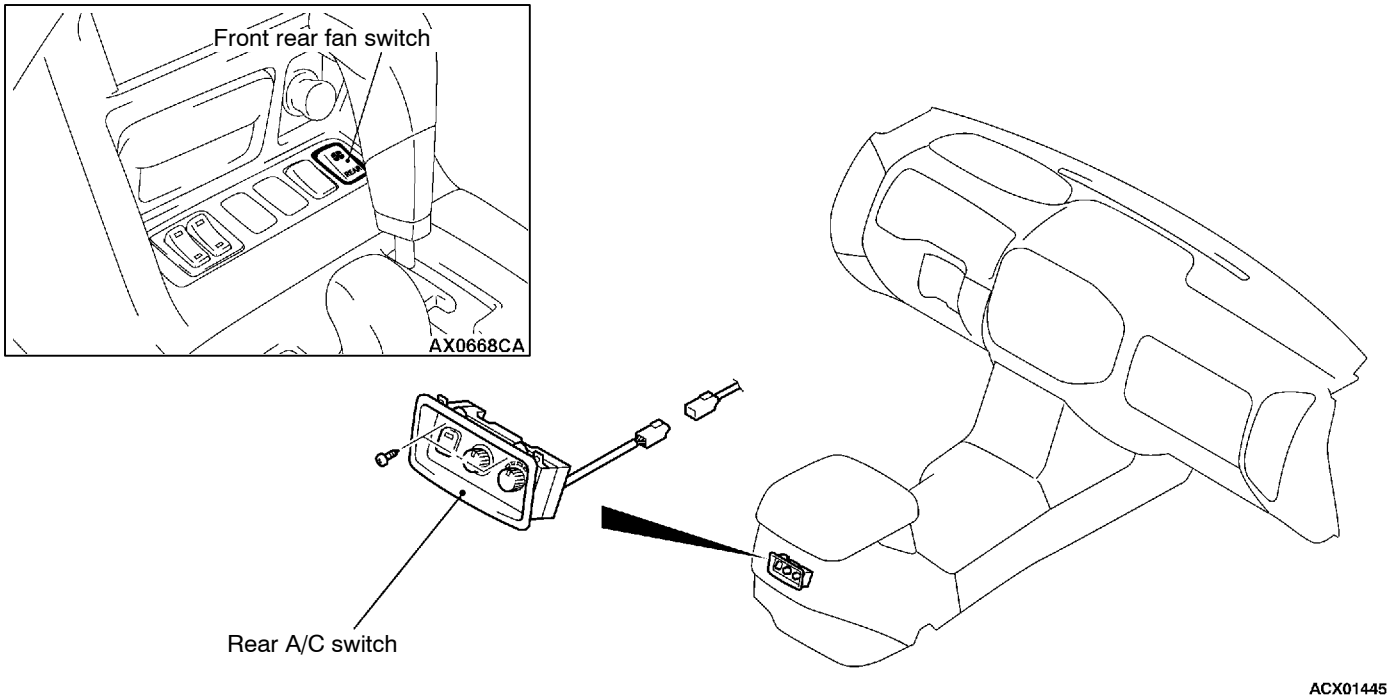


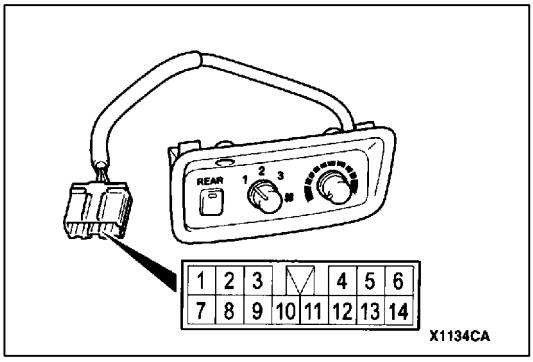


## INSPECTION

### CONTINUITY CHECK OF THE REAR A/C SWITCH

**Air Volume Adjusting Switch Check**

| Switch position | Terminal No. | | | |
|---|---|---|---|---|
| | 1 | 4 | 6 | 7 |
| 1 | ○ | ○ | | |
| 2 | ○ | | ○ | |
| 3 | ○ | | | ○ |

Purchased from www.WorkshopManuals.co.uk

www.WorkshopManuals.co.uk

### Rear Fan Switch Check

The rear fan switch toggles on and off.

| Switch position | Terminal No. | | | | | | | |
|---|---|---|---|---|---|---|---|---|
| | 2 | 8 | 9 | IND | 12 | 10 | ILL | 11 |
| OFF position | | | | | | | | |
| ON position | | | | | | | | |

### Temperature Adjusting Switch Check

Connect an ohmmeter between connector terminals No.3 and 5 as well as 5 and 13. The resistance values should change within the standard value range gradually when the temperature adjusting switch is operated.

**Standard value: 0 - 3 kΩ**

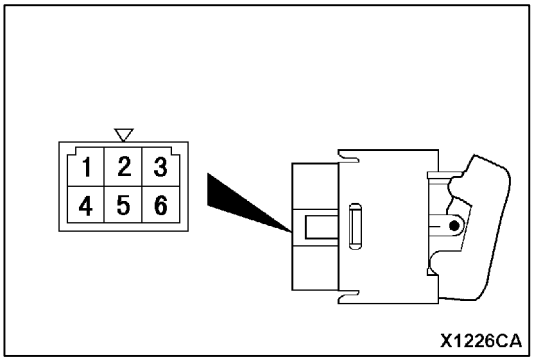


### Front Rear Fan Switch Continuity Check

| Switch position | Terminal No. | | | | | | | |
|---|---|---|---|---|---|---|---|---|
| | 1 | 2 | IND | 5 | 6 | 3 | ILL | 4 |
| OFF position | | | | | | | | |
| ON position | | | | | | | | |

Purchased from www.WorkshopManuals.co.uk

www.WorkshopManuals.co.uk

## REAR A/C CONTROL UNIT
## REMOVAL AND INSTALLATION

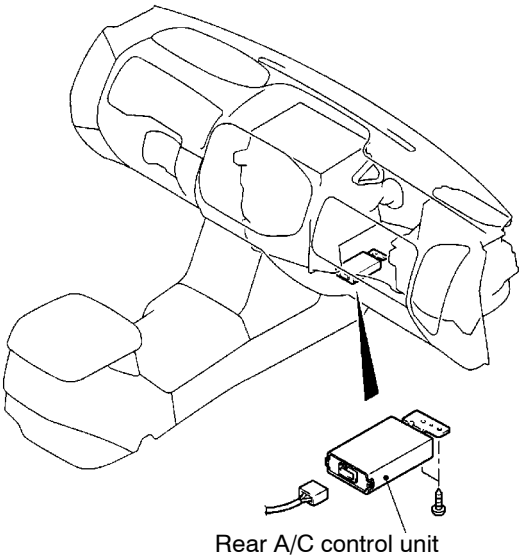


BX0970CA

## REAR HEATER UNIT <Floor console>
## REMOVAL AND INSTALLATION

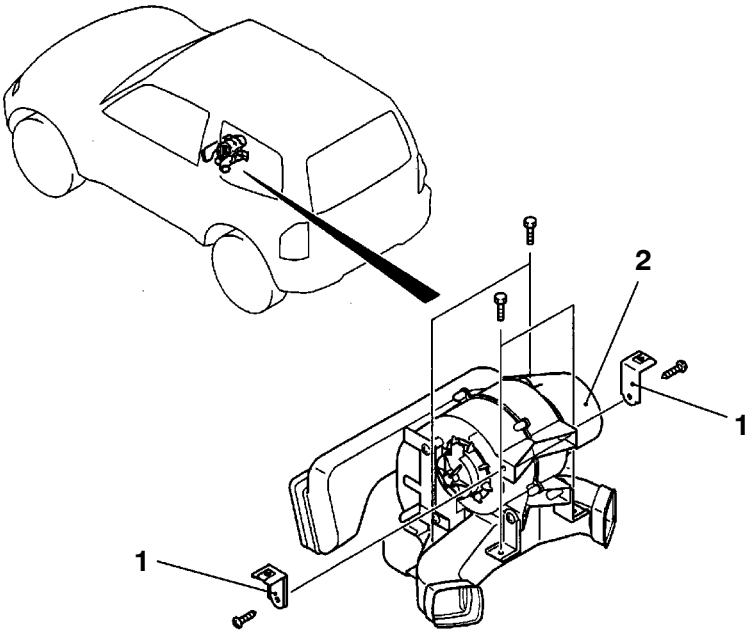


AY0259CA

**Removal steps**

- Front floor console
  (Refer to GROUP 52A.)

1. Upper bracket
2. Rear heater unit

Purchased from www.WorkshopManuals.co.uk

www.WorkshopManuals.co.uk

## REAR HEATER UNIT <FLOOR CONSOLE> DISASSEMBLY AND REASSEMBLY

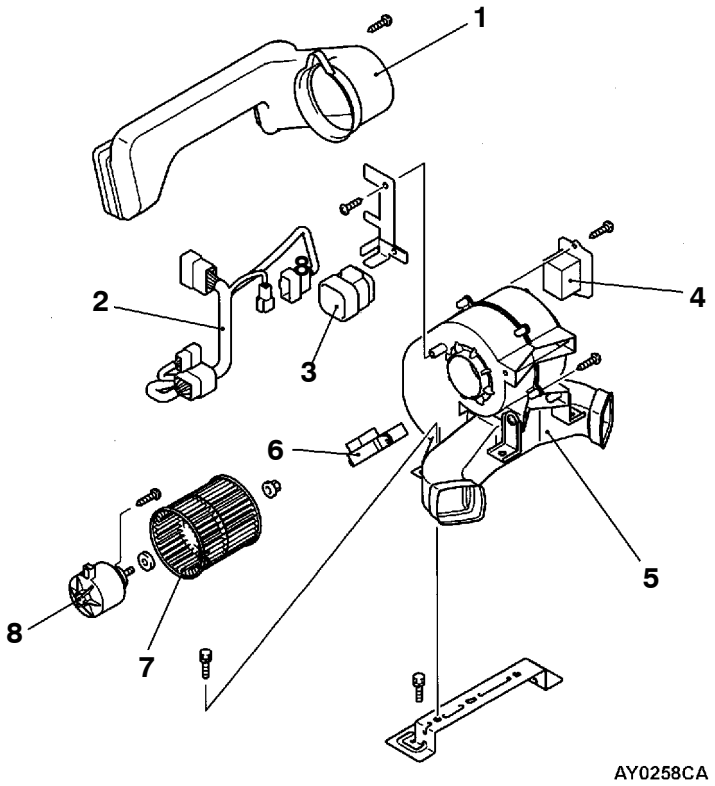


**Disassembly steps**

1. Rear inlet duct
2. Harness assembly
3. Relay
4. Resistor
5. Heater case
6. Heater core
7. Blower fan
8. Blower motor

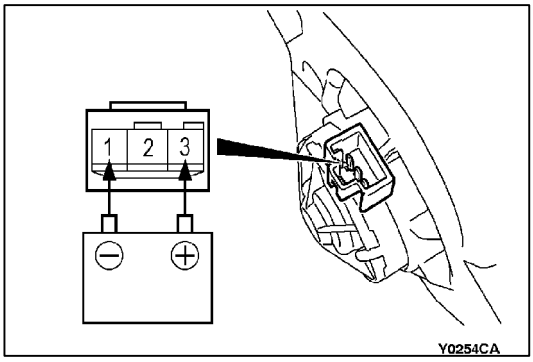


## INSPECTION

### BLOWER MOTOR INSPECTION

The motor should run when battery voltage is applied between the terminals. In addition, any abnormal sound should not be heard from the motor.

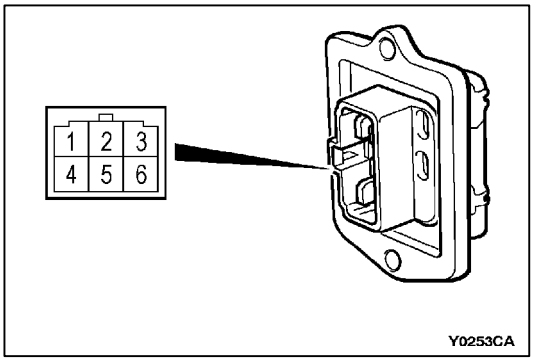


### RESISTOR CHECK

**Standard value:**

| Terminal to be measured | Standard value Ω |
|---|---|
| Between terminals No.1 and 6 | 4.9 ± 7 % |
| Between terminals No.1 and 3 | 1.25 ± 7 % |

Purchased from www.WorkshopManuals.co.uk

www.WorkshopManuals.co.uk

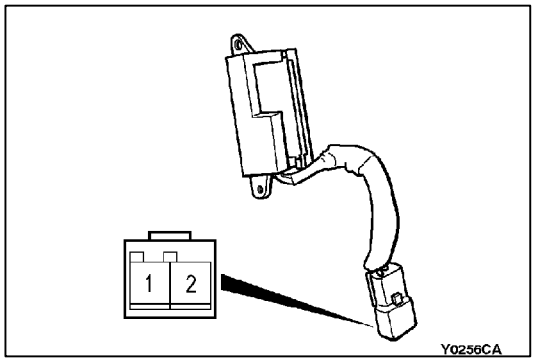


## PTC HEATER CHECK

Continuity should be present between the terminals.

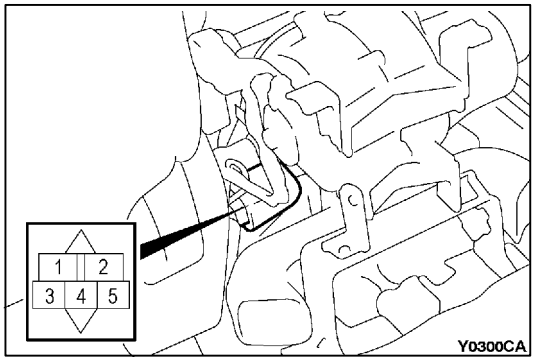


## RELAY CONTINUITY CHECK

| System voltage | Terminal No. | | | |
|---|---|---|---|---|
| | 1 | 3 | 2 | 5 |
| When current is not supplied | ○ | ○ | | |
| When current is supplied | ⊕ | ⊖ | ○ | ○ |

Purchased from www.WorkshopManuals.co.uk

www.WorkshopManuals.co.uk

## REAR HEATER UNIT AND REAR BLOWER ASSEMBLY <QUARTER TRIM> REMOVAL AND INSTALLATION

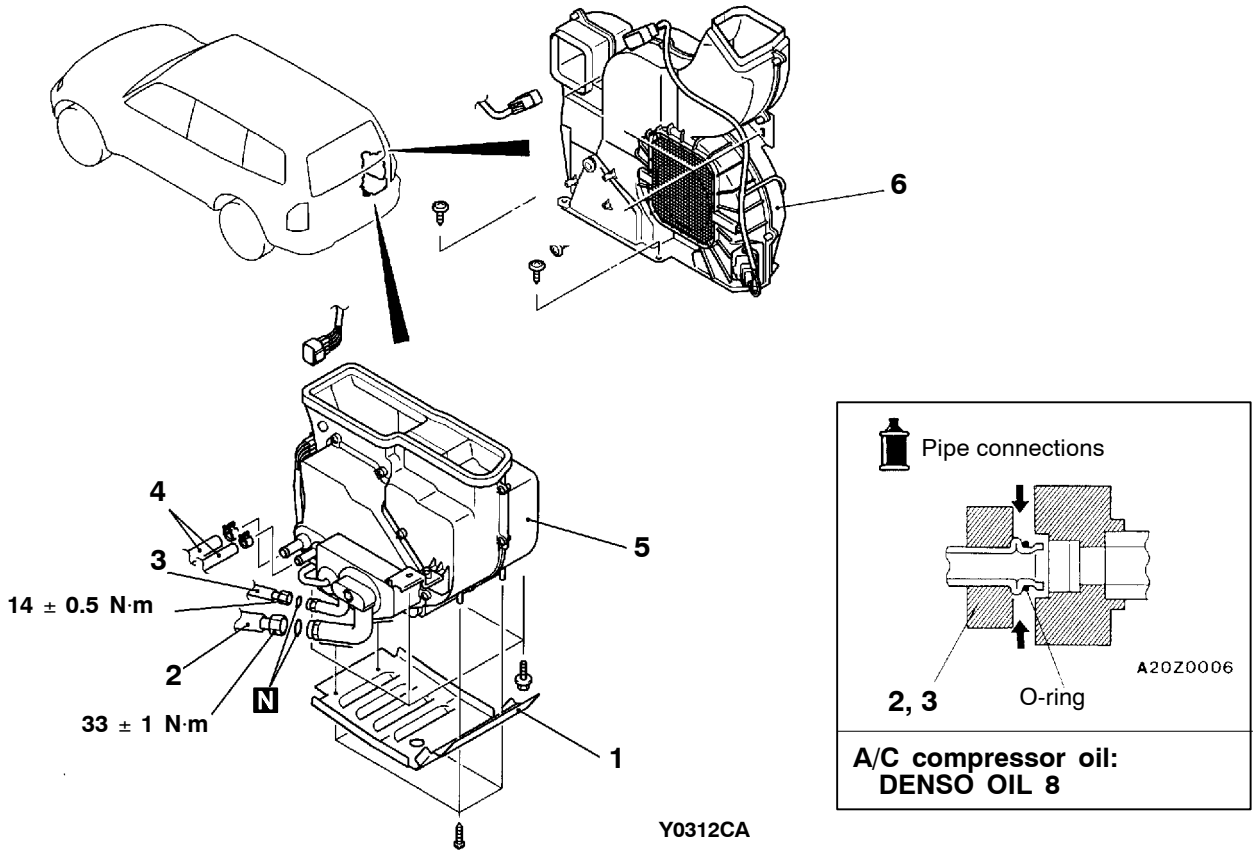


**Rear heater unit removal steps**

- Refrigerant discharge and refilling (Refer to P.55A-9.)
- Engine coolant draining and refilling (Refer to GROUP 14 - On-vehicle Service.)
- Rear mud guard (Refer to GROUP 51.)

1. Heater cover
2. Suction pipe C connection
3. Liquid pipe D connection
4. Heater hose connection
5. Rear heater unit

◀A▶
◀A▶

**Rear blower assembly removal steps**

- Upper quarter trim (RH), lower quarter trim (RH)
  (Refer to GROUP 52A – Trim.)
- Rear quarter duct, rear floor duct A mounting bolt, pillar duct mounting bolt (Refer to P.55A-55.)

6. Rear blower assembly

## REMOVAL SERVICE POINTS

### ◀A▶ SUCTION PIPE C/LIQUID PIPE D DISCONNECTION

Plug the disconnected pipe and the rear heater unit nipples to prevent dust or foreign material from entering them.

**Caution**
**Use a plug, which air does not penetrate through. Compressor oil and receiver absorb moisture easily.**

Purchased from www.WorkshopManuals.co.uk

www.WorkshopManuals.co.uk

## REAR HEATER UNIT DISASSEMBLY AND REASSEMBLY

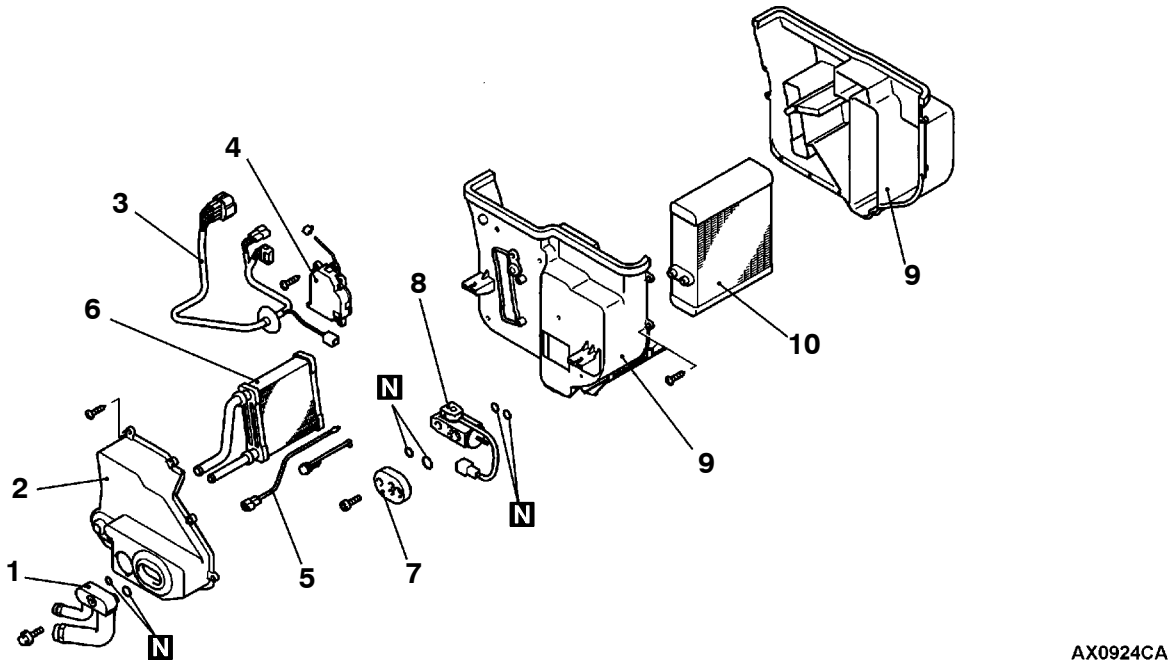


**Disassembly steps**

1. Tube accessory assembly
2. Heater cover
3. Harness assembly
4. Electric motor for the air mix damper <Vehicles with rear heater>
5. Air thermo sensor <Vehicles with rear cooler>
6. Heater core <Vehicles with rear heater>
7. Connector tube <Vehicles with rear cooler>
8. Expansion valve <Vehicles with rear cooler>
9. Heater case
10. Evaporator <Vehicles with rear cooler>

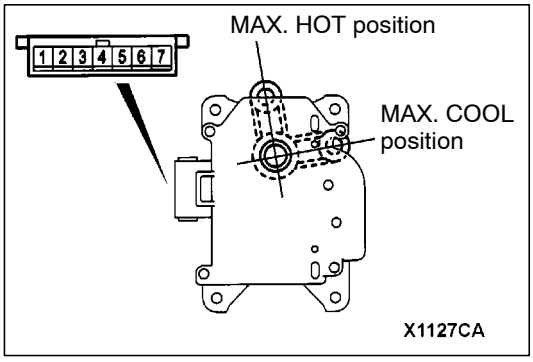


## INSPECTION

### AIR MIX DAMPER MOTOR CHECK

**Motor Check**

| Battery connection terminal | | Lever operation |
|---|---|---|
| 1 | 2 | |
| ⊕ | ⊖ | Rotate to the COOL position. |
| ⊖ | ⊕ | Rotate to the HOT position. |

**Caution**
**If the lever reaches the stop position, disconnect the battery voltage.**

**Potentiometer Check**

When the resistances between terminals 3 and 5 as well as terminals 3 and 7 are measured at the previous check, the resistance value should change gradually within the standard value.

**Standard value: 1.2 - 4.8 kΩ**

Purchased from www.WorkshopManuals.co.uk

www.WorkshopManuals.co.uk

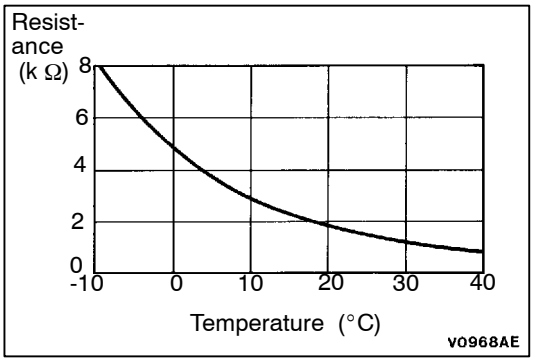


### Air Thermo Sensor Check

Measure the resistance between the sensor terminals under at least two temperatures. The resistance values should meet the left graph.

NOTE
The temperature should be within the shown range.

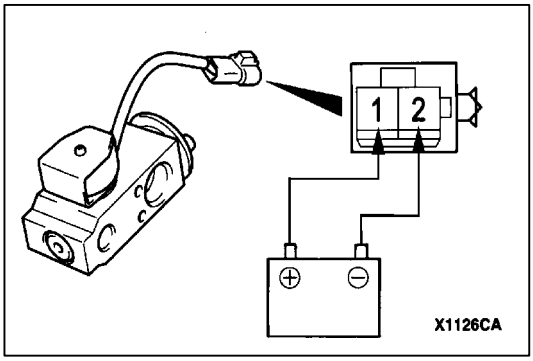


### Expansion Valve (Magnet Valve) Check

When battery voltage is applied to the magnetic valve terminal No.1 and No.2 terminal is earthed, operating sound should be heard from the magnetic valve.

## REAR BLOWER ASSEMBLY DISASSEMBLY AND REASSEMBLY

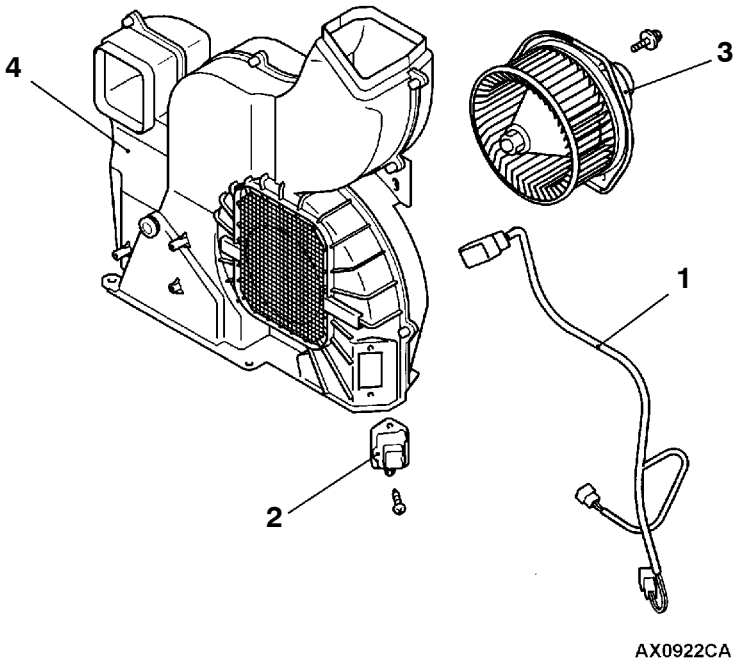


**Disassembly steps**

1. Harness assembly
2. Resistor
3. Blower motor assembly
4. Case

Purchased from www.WorkshopManuals.co.uk

www.WorkshopManuals.co.uk

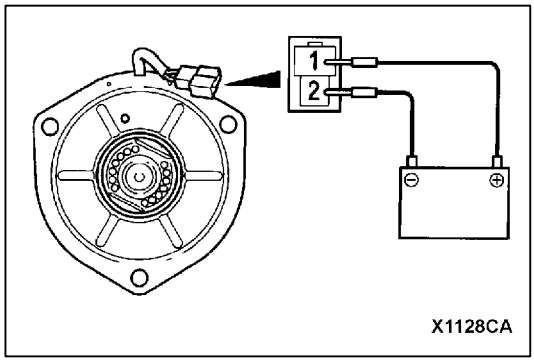


## INSPECTION

### BLOWER MOTOR CHECK

The motor should run when battery voltage is applied between the terminals. In addition, any abnormal sound should not be heard from the motor.

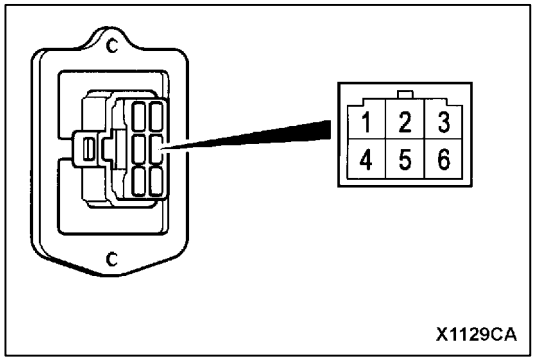


### RESISTOR CHECK

**Standard value:**

| Terminal to be measured | Standard value Ω |
|---|---|
| Between terminals No.1 and 6 | 4.9 ± 7% |
| Between terminals No.1 and 3 | 1.25 ± 7% |

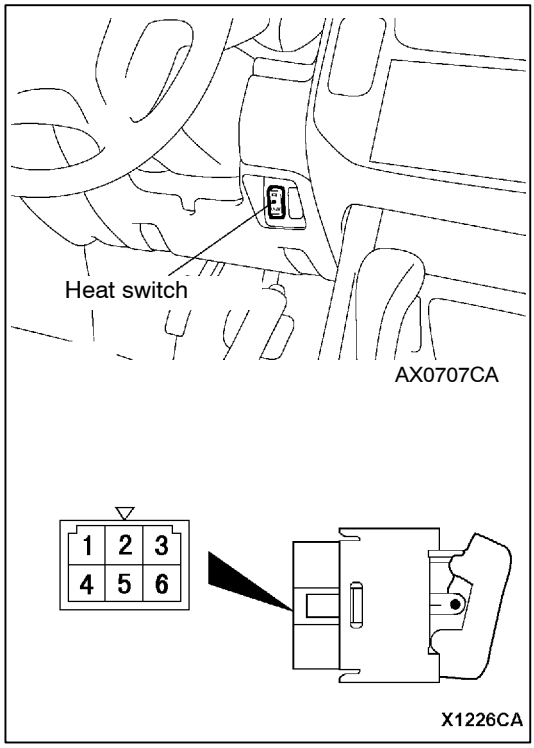


# HEAT SWITCH <4M41>

## INSPECTION

### HEAT SWITCH CHECK

| Switch position | Terminal No. | | | | | | |
|---|---|---|---|---|---|---|---|
| | 1 | 2 | IND | 6 | 3 | ILL | 4 |
| OFF position | ○ | | ⊕ | ○ | ○ | ⊕ | ○ |
| ON position | ○ | ○ | ⊕ | ○ | ○ | ⊕ | ○ |

Purchased from www.WorkshopManuals.co.uk

www.WorkshopManuals.co.uk

# COMPRESSOR

## REMOVAL AND INSTALLATION

**Pre-removal Operations**
- Refrigerant Discharge (Refer to P.55A-9.)
- Air Duct A Removal (Refer to GROUP 15 – Air Cleaner.)
- Condense Tank Removal (Refer to GROUP 14 – Radiator.)

**Post-installation Operations**
- Refrigerant Charge (Refer to P.55A-9.)
- Condense Tank Installation (Refer to GROUP 14 – Radiator.)
- Air Duct A Installation (Refer to GROUP 15 – Air Cleaner.)
- Drive Belt Tension Check (Refer to GROUP 11A, B - On-vehicle Service.)

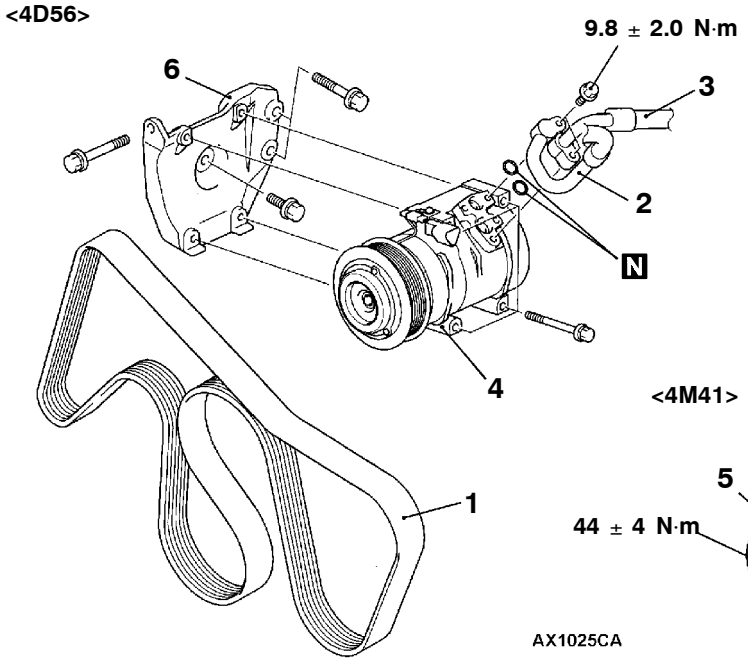


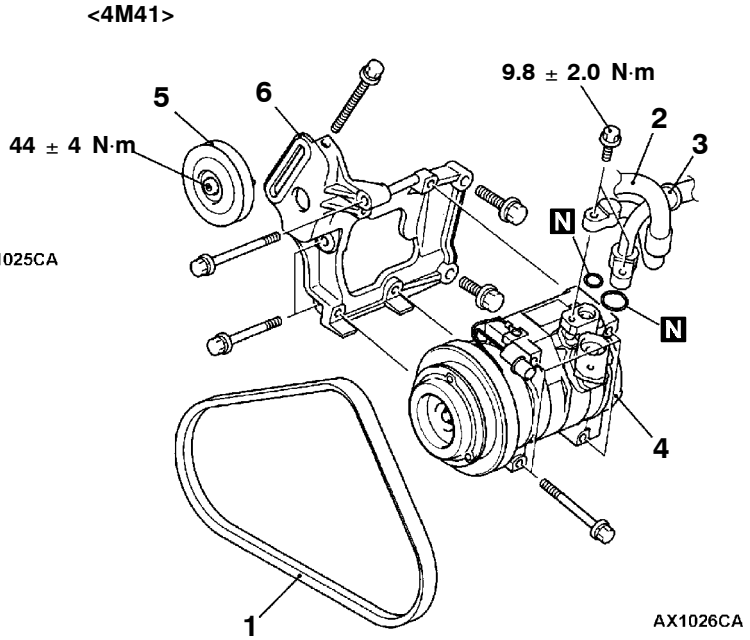


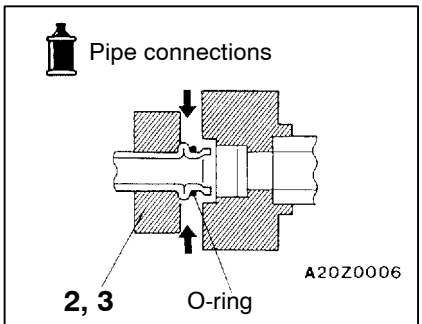


**A/C compressor oil:**
**DENSO OIL 8**

**Removal steps**

◀A▶ 1. Drive belt
◀B▶ 2. Discharge flexible hose connection
◀B▶ 3. Suction flexible hose connection
◀C▶ ▶A◀ 4. Compressor
5. Tension pulley assembly
6. Compressor bracket

Purchased from www.WorkshopManuals.co.uk

www.WorkshopManuals.co.uk

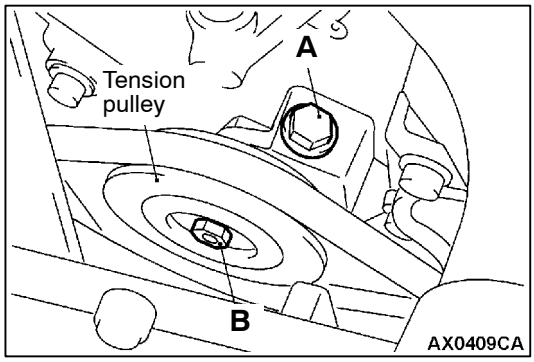


## REMOVAL SERVICE POINTS

### ◀A▶ DRIVE BELT REMOVAL

Loosen tension pulley mounting bolt A and adjusting bolt B in that order, and then remove the drive belt.

**Caution**
**If the drive belt is reused, mark an arrow indicating rotation direction (clockwise direction) on the belt surface with a chalk.**

### ◀B▶ DISCHARGE FLEXIBLE HOSE/SUCTION FLEXIBLE HOSE DISCONNECTION

Plug the disconnect hoses and the compressor nipples to prevent dust or foreign material from entering them.

**Caution**
**Use a plug, which air does not penetrate through. Compressor oil and receiver absorb moisture easily.**

### ◀C▶ COMPRESSOR REMOVAL

Be careful not to spill the compressor oil.

## INSTALLATION SERVICE POINT

### ▶A◀ COMPRESSOR INSTALLATION

If a new compressor is installed, first adjust the amount of oil according to the procedures described below, and then install the compressor.

1. Measure the amount of oil within the removed compressor. (X mL)
2. Drain (from the new compressor) the amount of oil calculated according to the following formula, and then install the new compressor.

   **Except vehicles with rear cooler:**
   **120 mL – X mL = Y mL**

   **Vehicles with rear cooler, dual A/C:**
   **140 mL – X mL = Y mL**

   NOTE
   (1) The above amounts (120 mL and 140 mL) indicate the factory-charged amount inside a new compressor.
   (2) Y mL indicates the amount of oil in the refrigerant line, the condenser, the evaporator, etc.

Purchased from www.WorkshopManuals.co.uk

www.WorkshopManuals.co.uk

## DISASSEMBLY AND REASSEMBLY

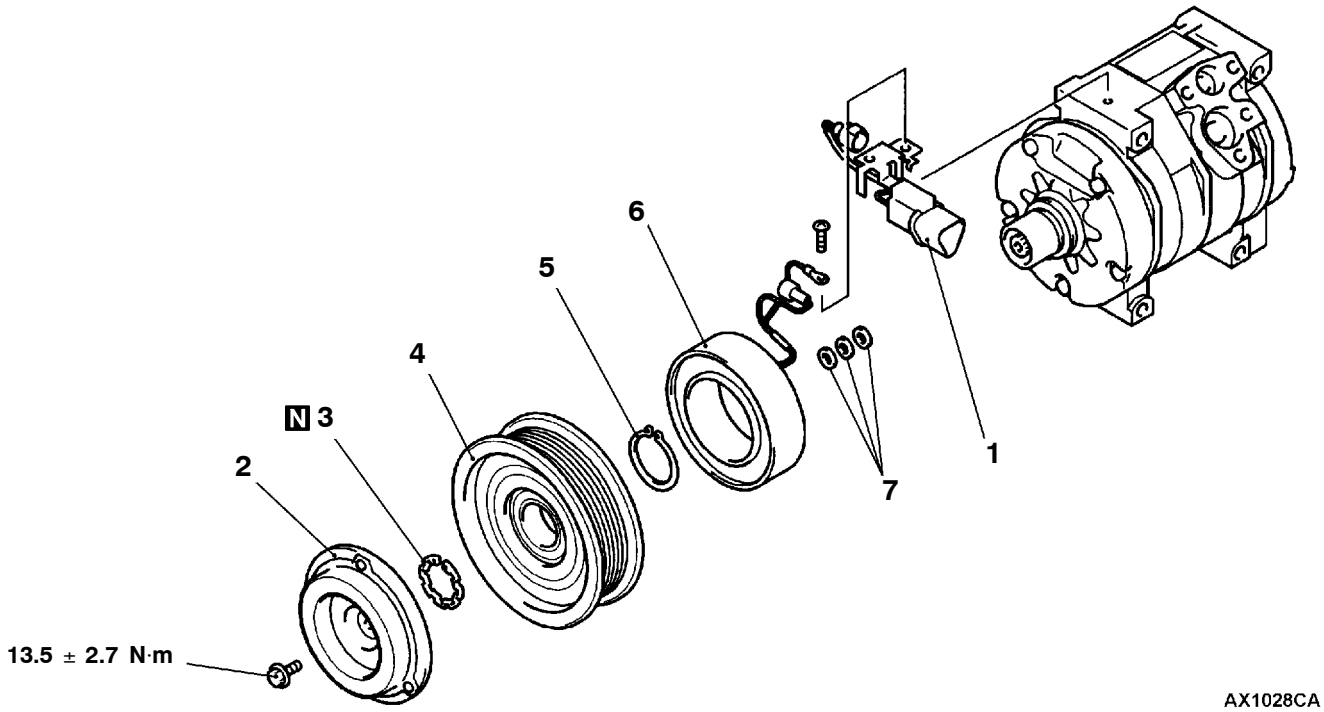


**Disassembly steps**

▶C◀ ● Air gap adjustment
1. Connector
◀A▶ 2. Armature
▶B◀ 3. Snap ring
4. Rotor
5. Snap ring
▶A◀ 6. Field core
7. Washer

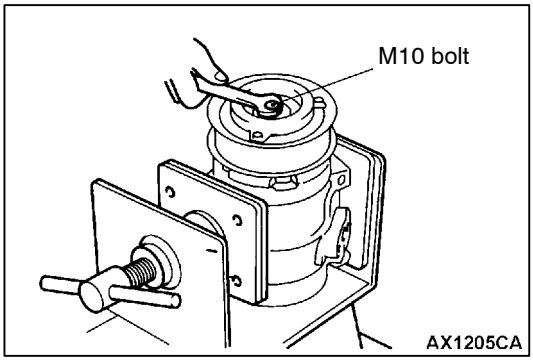


## DISASSEMBLY SERVICE POINT

### ◀A▶ ARMATURE REMOVAL

1. Remove the armature mounting bolt.
2. Tighten the M10 bolt in the armature bolt hole to disengage the shaft from the armature serration.

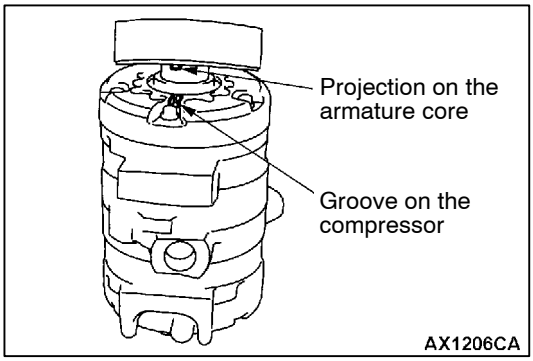


## ASSEMBLY SERVICE POINT

### ▶A◀ FIELD CORE INSTALLATION

Align the compressor groove with the field core projection to install the field core.

Purchased from www.WorkshopManuals.co.uk

www.WorkshopManuals.co.uk

### ▶B◀ SNAP RING INSTALLATION

Be careful not to expand the snap ring excessively. If the inside diameter of the snap ring exceeds 30.5 mm due to excessive expansion, replace it.

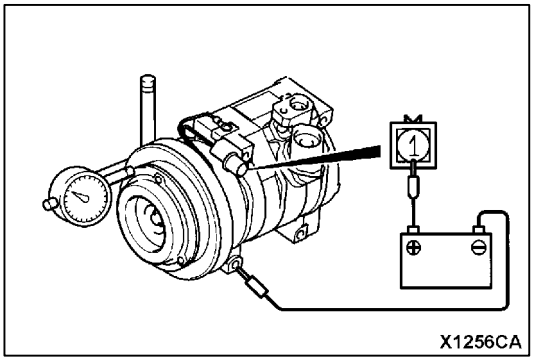


### ▶C◀ AIR GAP ADJUSTMENT

Apply battery voltage to the magnetic clutch, and check that the clutch air gap is within the standard value.
If not within the standard value, use a washer to adjust the air gap.

**Standard value: 0.35 - 0.65 mm**

NOTE
The washers are available in three thicknesses (0.1 mm, 0.3 mm, 0.5 mm).

Purchased from www.WorkshopManuals.co.uk

www.WorkshopManuals.co.uk

# CONDENSER ASSEMBLY AND CONDENSER FAN

## REMOVAL AND INSTALLATION

**Pre-removal and Post-installation Operations**
- Refrigerant Discharge and Refilling (Refer to P.55-9.)
- Radiator Grille and Skid Plate Removal and Installation (Refer to GROUP 51 – Front Bumper.)
- Air Duct A Removal and Installation (Refer to GROUP 15 – Air Cleaner.)
- Condenser Tank Removal and Installation (Refer to GROUP 14 - Radiator.)
- Oil Reservoir Mounting Bolt Removal and Installation (Refer to GROUP 37 – Oil Line.)

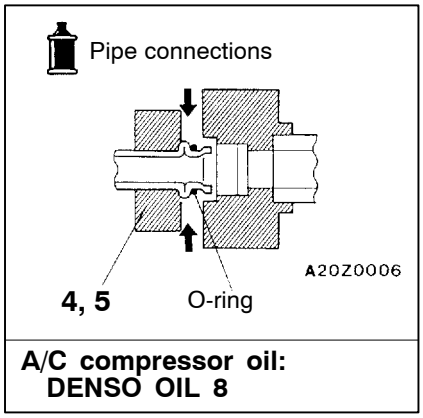


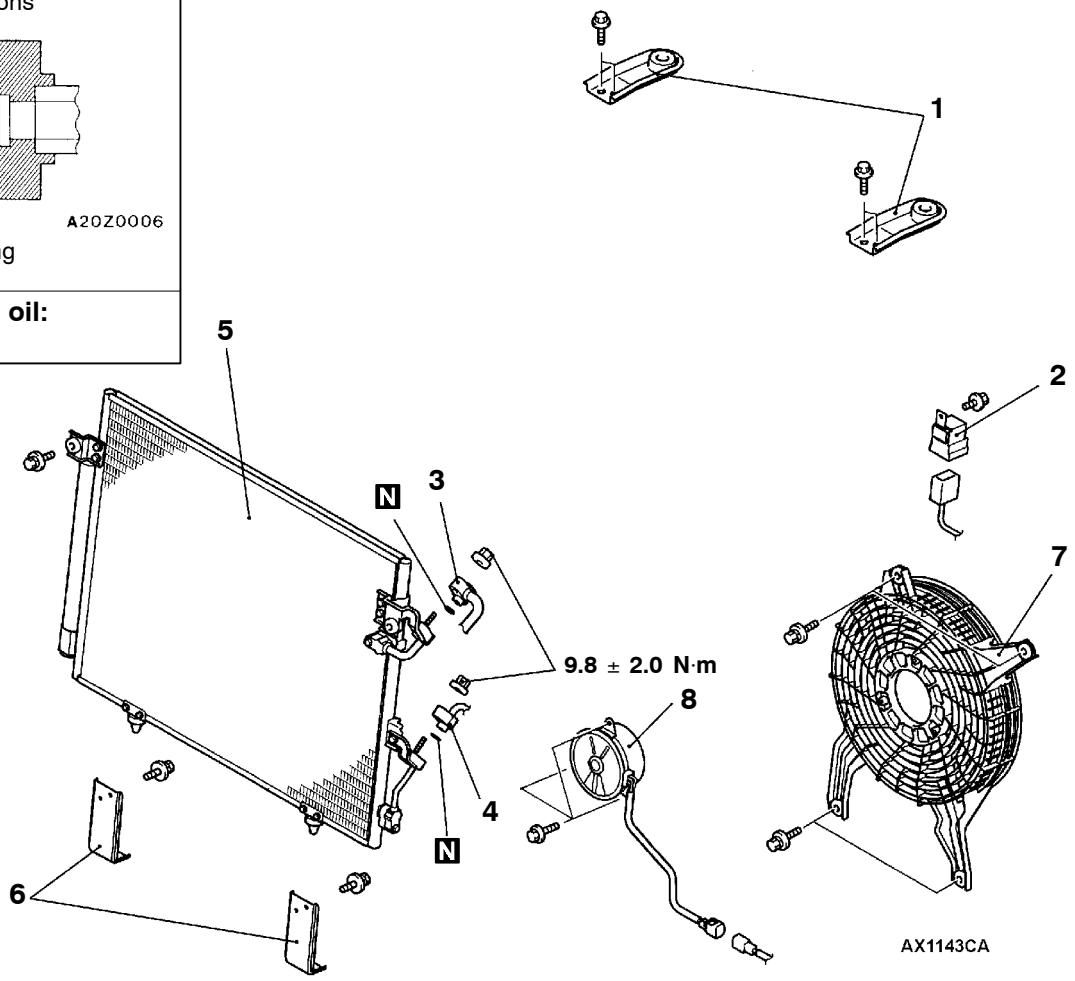


**Condenser assembly removal steps**

1. Radiator bracket
2. PTC heater relay <4M41>
3. Discharge flexible hose connection
4. Liquid pipe A connection
5. Condenser
6. Condenser bracket

**Condenser fan removal steps**

7. Condenser fan assembly
8. Motor assembly

Purchased from www.WorkshopManuals.co.uk

www.WorkshopManuals.co.uk

## REMOVAL SERVICE POINT

### ◀A▶ DISCHARGE FLEXIBLE HOSE/LIQUID PIPE A DISCONNECTION

Plug the disconnected hoses, pipes and the condenser nipples to prevent system contamination.

**Caution**
**Use a plug, which air does not penetrate through. Compressor oil and receiver absorb moisture easily.**

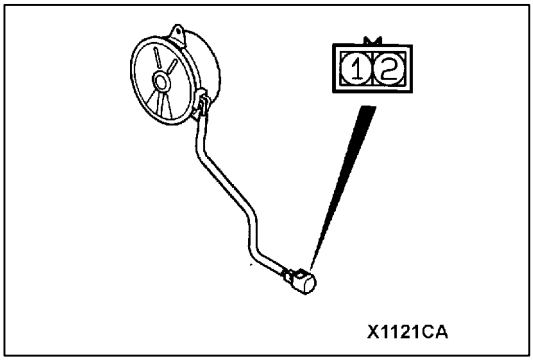


## INSPECTION

### MOTOR ASSEMBLY CHECK

| Battery connection terminal | | Motor operation |
|---|---|---|
| 1 | 2 | |
| ⊕ | ⊖ | Turns |

Purchased from www.WorkshopManuals.co.uk

www.WorkshopManuals.co.uk

# REFRIGERANT LINE

## REMOVAL AND INSTALLATION
## <L.H. drive vehicles>

**Pre-removal and Post-installation Operations**
- Refrigerant Discharge and Refilling (Refer to P.55-9.)
- Condense Tank Removal and Installation (Refer to GROUP 14 – Radiator.)
- Engine Cover Removal
- Battery, Battery Tray Removal and Installation

### <Single A/C>

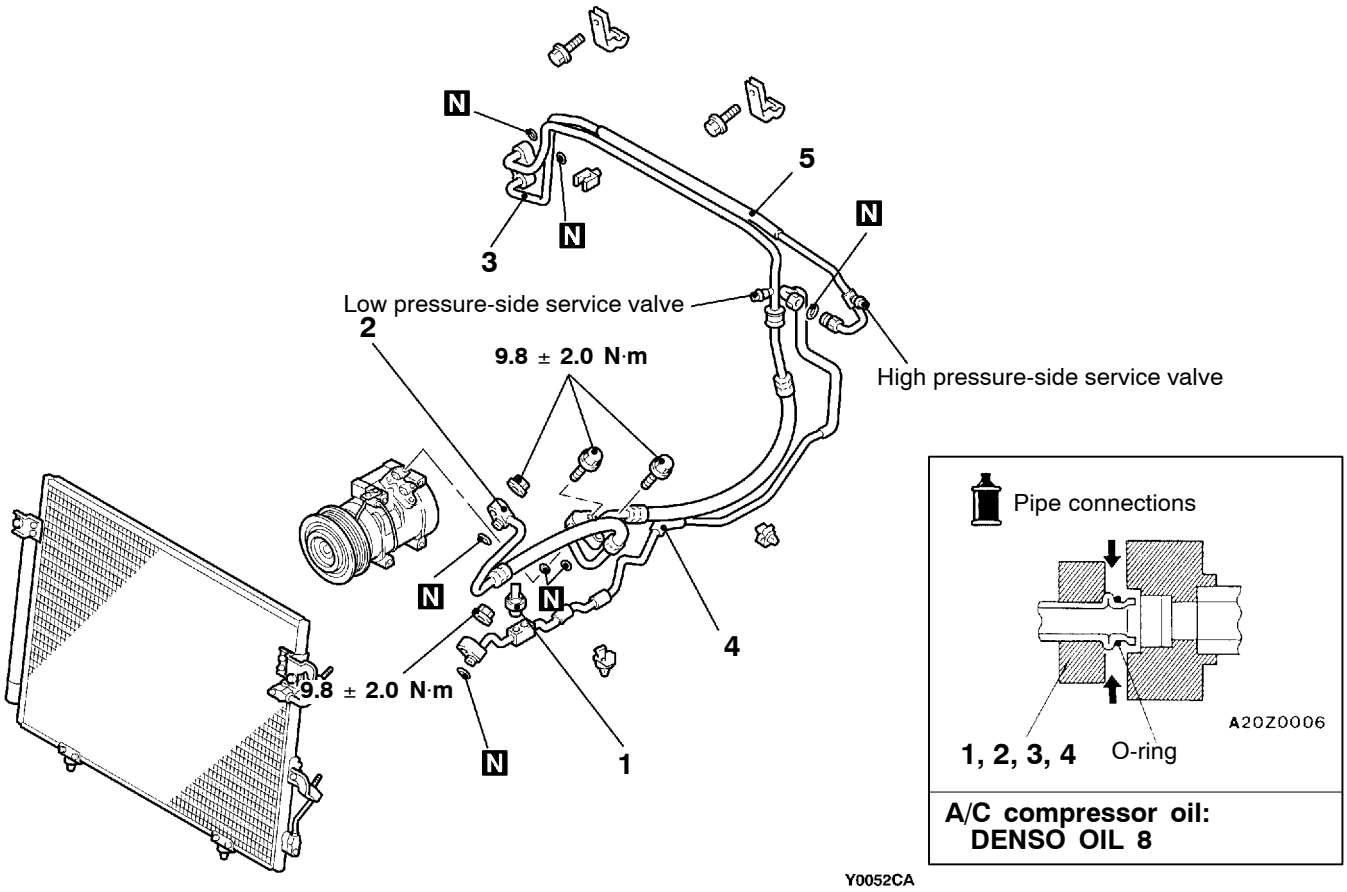


**Removal steps**

1. Dual pressure switch
◀A▶ 2. Discharge flexible hose
◀A▶ 3. Suction flexible hose
◀A▶ 4. Liquid pipe A
5. Liquid pipe B

Purchased from www.WorkshopManuals.co.uk

www.WorkshopManuals.co.uk

<Dual A/C>

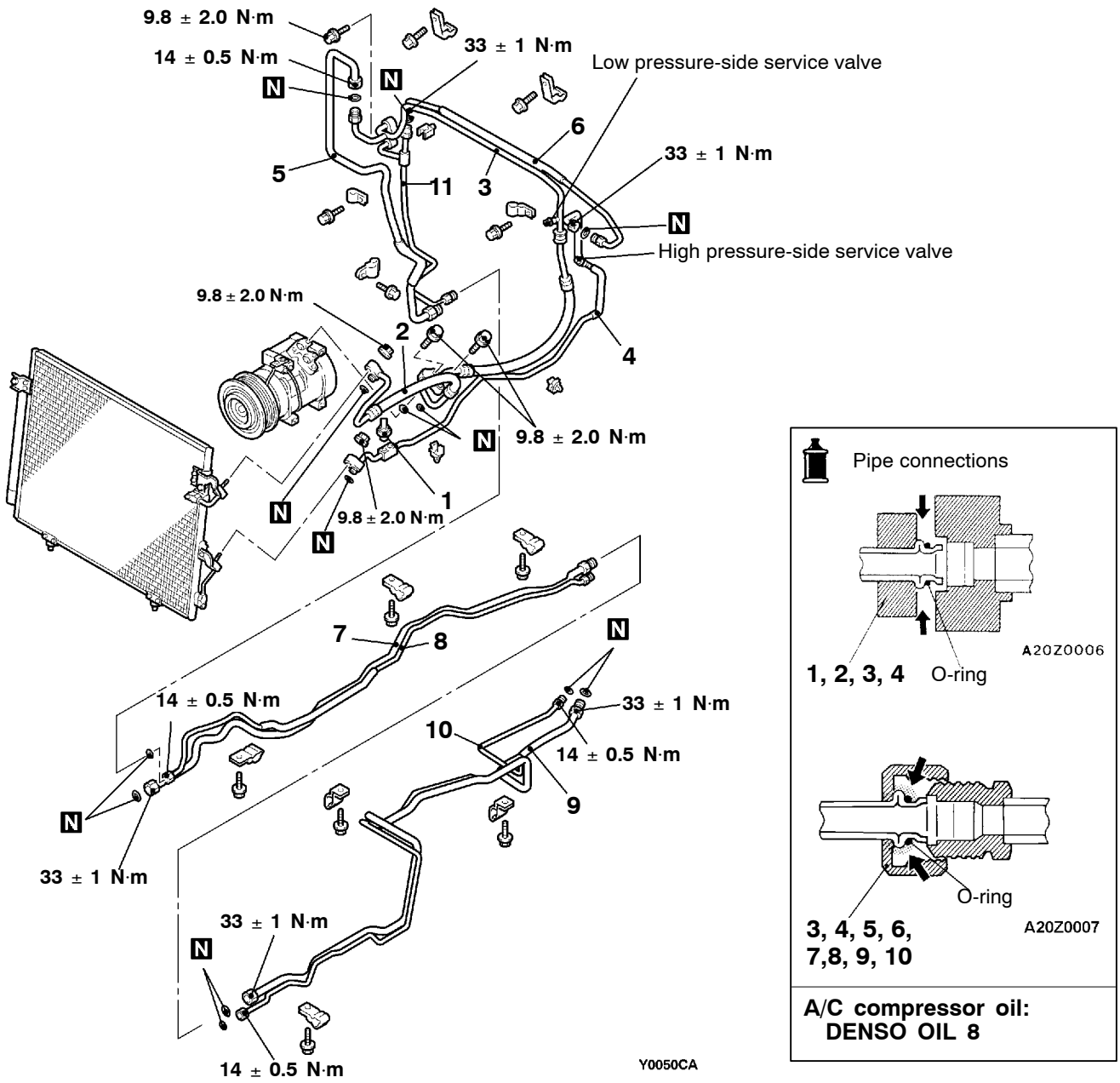


**Removal steps**

1. Dual pressure switch
◀A▶ 2. Discharge flexible hose
◀A▶ 3. Suction flexible hose
◀A▶ 4. Liquid pie A
◀A▶ 5. Suction pipe A
◀A▶ 6. Liquid pipe B
◀A▶ 7. Suction pipe B
◀A▶ 8. Liquid pipe C
◀A▶ 9. Suction pipe C
◀A▶ 10. Liquid pipe D
◀A▶ 11. Liquid pipe E

Purchased from www.WorkshopManuals.co.uk

www.WorkshopManuals.co.uk

## <R.H. drive vehicles>

**Pre-removal and Post-installation Operations**
- Refrigerant Discharge and Refilling (Refer to P.55-9.)
- Condense Tank Removal and Installation (Refer to GROUP 14 – Radiator.)
- Engine Cover Removal
- Battery, Battery Tray Removal and Installation

### <Single A/C>

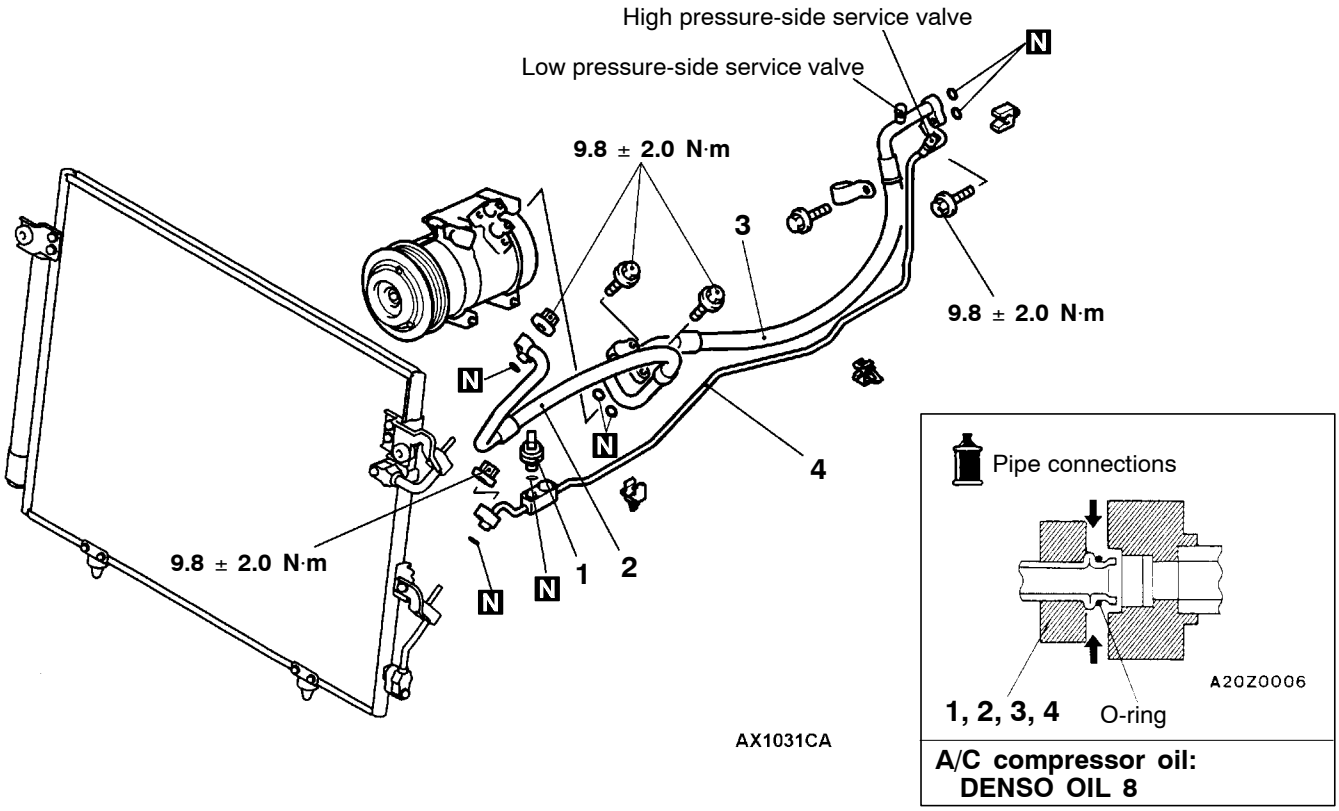


**Removal steps**

1. Dual pressure switch
◀A▶ 2. Discharge flexible hose
◀A▶ 3. Suction flexible hose
◀A▶ 4. Liquid pipe A

Purchased from www.WorkshopManuals.co.uk

www.WorkshopManuals.co.uk

<Dual A/C>

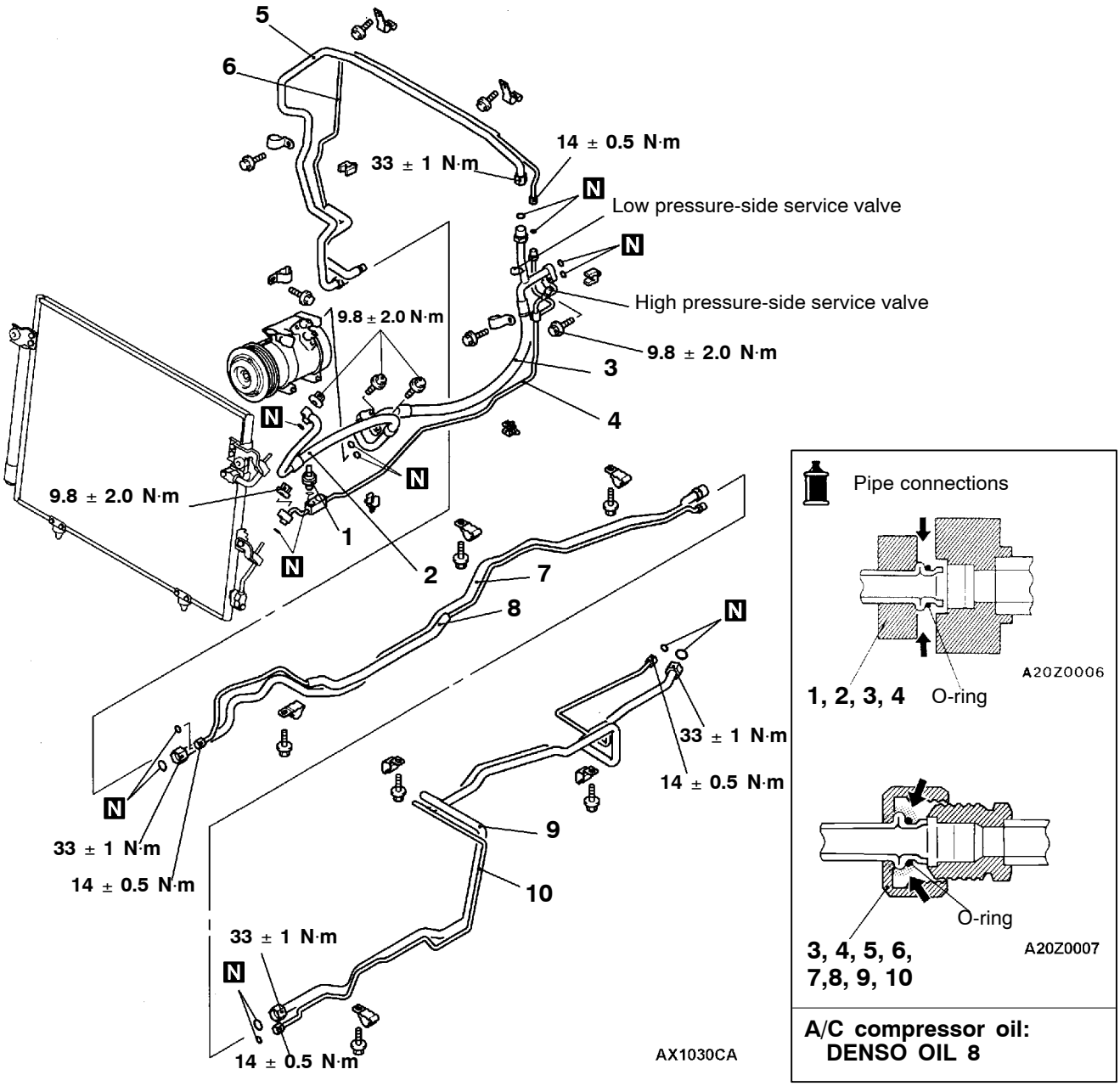


**Removal steps**

1. Dual pressure switch
2. ◀A▶ Discharge flexible hose
3. ◀A▶ Suction flexible hose
4. ◀A▶ Liquid pie A
5. ◀A▶ Suction pipe A
6. ◀A▶ Liquid pipe B
7. ◀A▶ Suction pipe B
8. ◀A▶ Liquid pipe C
9. ◀A▶ Suction pipe C
10. ◀A▶ Liquid pipe D

## REMOVAL SERVICE POINT

### ◀A▶ HOSE/PIPE DISCONNECTION

Plug the condenser, the compressor and the heater unit nipples to prevent system contamination.

**Caution**

**Use a plug, which air does not penetrate through. Compressor oil and receiver absorb moisture easily.**

Purchased from www.WorkshopManuals.co.uk

www.WorkshopManuals.co.uk

# ENGINE COOLANT TEMPERATURE SWITCH<4D56>

## REMOVAL AND INSTALLATION

**Pre-removal and Post-installation Operation**
- Coolant Refilling (Refer to GROUP 14 - On-vehicle Service.)
- Intercooler Removal and Installation <Vehicles with intercooler> (Refer to GROUP 15.)

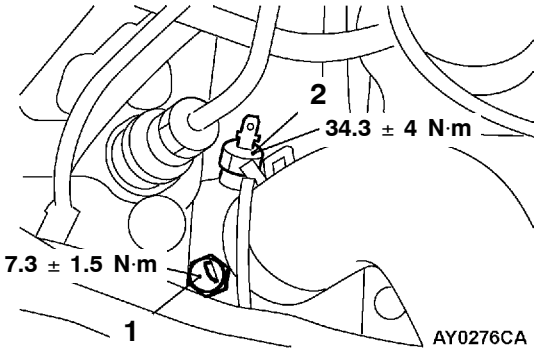


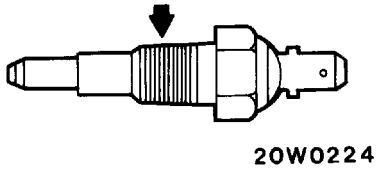


**Sealant:**
**3M Nut Locking Part No. 4171 or equivalent**

1. Engine coolant temperature switch (for A/C cut-off)
2. Engine coolant temperature switch (for condenser fan)

Purchased from www.WorkshopManuals.co.uk

www.WorkshopManuals.co.uk

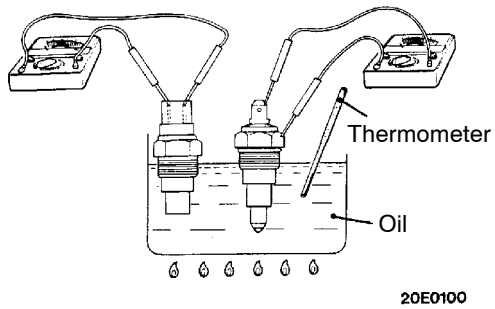


<For A/C cut-off>

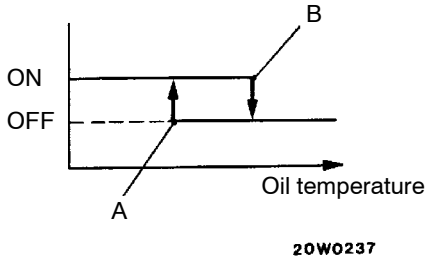


<For condenser fan>

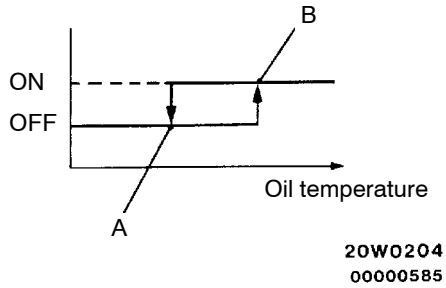


## INSPECTION

### ENGINE COOLANT TEMPERATURE SWITCH CONTINUITY CHECK

1. Dip the engine coolant temperature switch in oil and heat the oil with a gas burner or similar item.

   **Caution**
   **Do not heat any more than is necessary.**

2. Check the continuity with a circuit tester as the temperature of the oil changes, and the condition is normal if the continuity is within the following ranges.

   **Standard value:**

| Engine coolant temperature switch | Temperature | Continuity |
|---|---|---|
| For A/C cut-off | Less than 108 °C (Temperature at point A) | ON (Continuity) |
| | More than 115 °C (Temperature at point B) | OFF (No continuity) |
| For condenser fan | Less than 97 °C (Temperature at point A) | OFF (No continuity) |
| | More than 102 °C (Temperature at point B) | ON (Continuity) |

Purchased from www.WorkshopManuals.co.uk

www.WorkshopManuals.co.uk

# IDLE-UP SYSTEM <Diesel-powered Vehicles>

## REMOVAL AND INSTALLATION

**Pre-removal Operation**
Intercooler Removal <Vehicle with intercooler> (Refer to GROUP 15.)

**Post-installation Operation**
- Accelerator Cable Adjustment (Refer to GROUP 17 - On-vehicle Service.)
- Throttle Cable Adjustment <A/T> (Refer to GROUP 23 - On-vehicle Service.)
- Intercooler Installation <Vehicles with intercooler> (Refer to GROUP 15.)
- Idle-up Operation Check (Refer to P. 55-16.)

**<R.H. drive vehicles>**

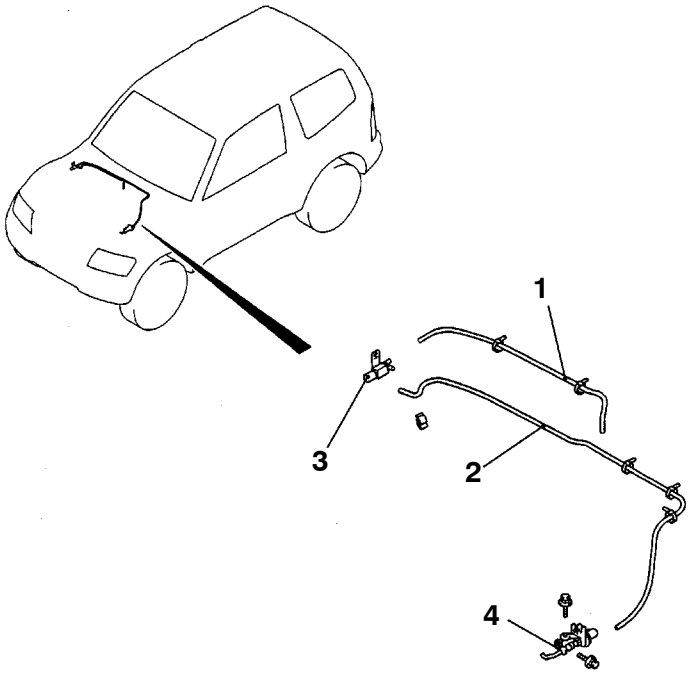


AY0277CA

**<L.H. drive vehicles>**

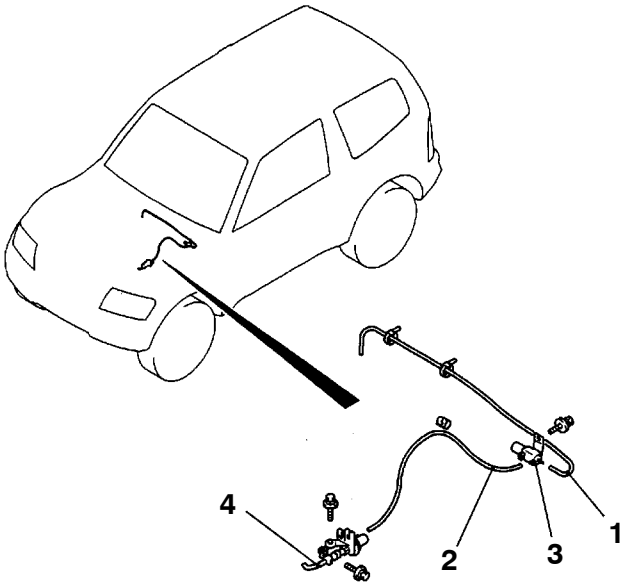


AY0275CA

**Idle-up solenoid valve removal steps**

1. Vacuum hose (white stripe) connection
2. Vacuum hose (yellow stripe) connection
3. Idle-up solenoid valve
4. Solenoid valve bracket B
5. Solenoid valve bracket A

**Vacuum actuator assembly removal steps**

2. Vacuum hose (yellow stripe) connection
6. Accelerator cable connection
7. Split pin <A/T>
8. Throttle cable connection <A/T>
9. Vacuum hose (blue stripe) <Vehicles with ABS>
10. Vacuum actuator assembly

Purchased from www.WorkshopManuals.co.uk

www.WorkshopManuals.co.uk

# DUCTS

## FRONT A/C DUCT
## REMOVAL AND INSTALLATION

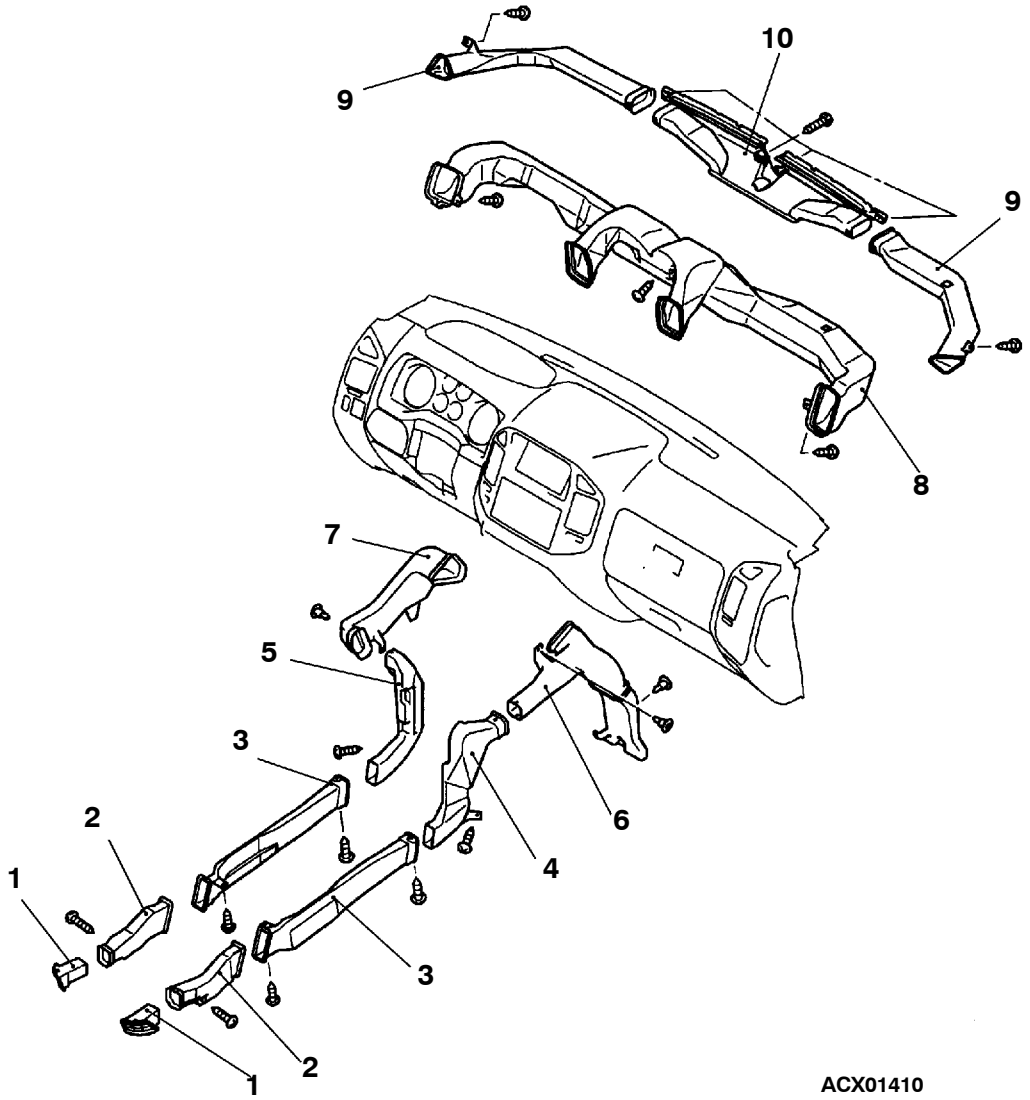


ACX01410

**Rear heater duct removal steps**

- Front floor console and rear floor console (Refer to GROUP 52A.)

1. Foot grille
2. Rear heater duct B
3. Rear heater duct A

**Defroster nozzle, distribution duct and foot duct removal steps**

- Instrument panel (Refer to GROUP 52A.)

4. Foot duct B
5. Foot duct D
6. Foot duct A
7. Foot duct C
8. Distribution duct
9. Side defroster duct
10. Defroster nozzle assembly

Purchased from www.WorkshopManuals.co.uk

www.WorkshopManuals.co.uk

## REAR A/C DUCT
## REMOVAL AND INSTALLATION

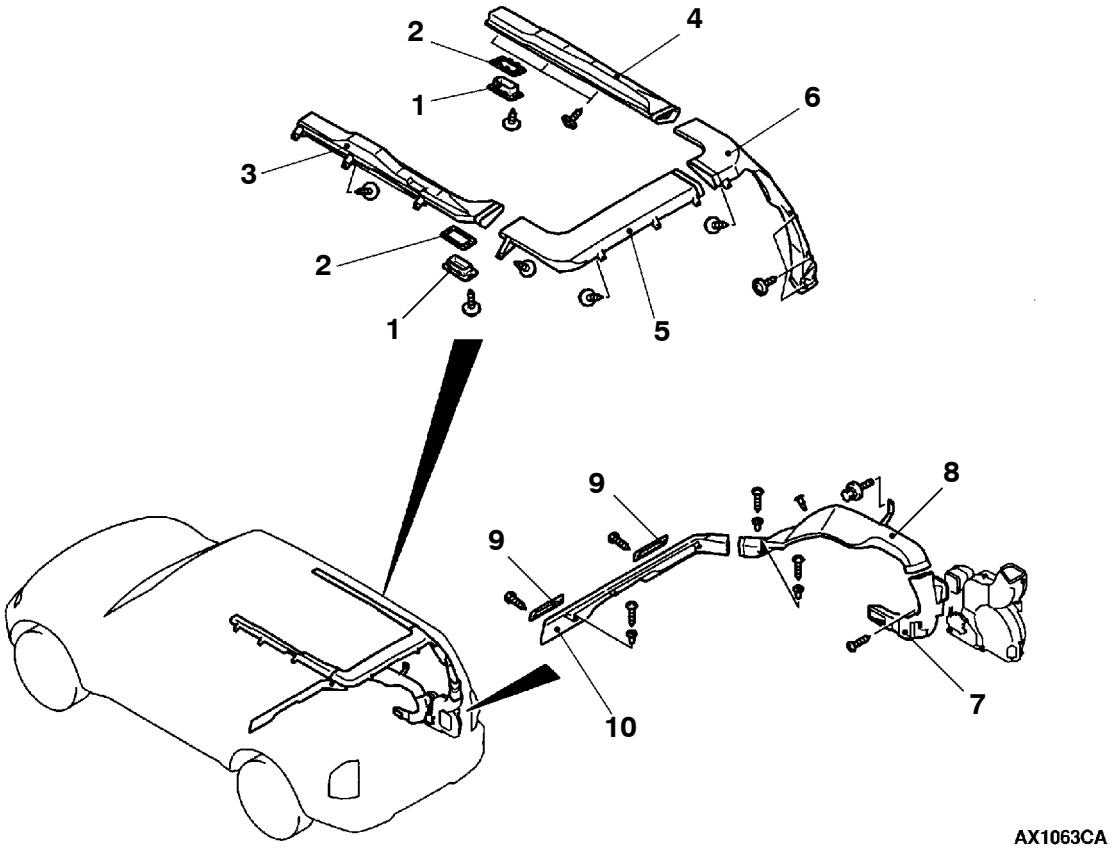


**Rear roof duct removal steps**

- Upper quarter trim (R.H.)
  (Refer to GROUP 52–Trims.)

1. Air outlet assembly
2. Retainer

- Head lining

3. Roof duct (L.H.)
4. Roof duct (R.H.)
5. Rear roof duct
6. Pillar duct

**Rear floor duct removal steps**

- Upper quarter trim (R.H.), lower quarter trim (R.H.)
  (Refer to GROUP 52 – Trims.)

7. Rear quarter duct
8. Rear floor duct A
9. Rear heater grille

- Floor carpet

10. Rear floor duct B

Purchased from www.WorkshopManuals.co.uk

www.WorkshopManuals.co.uk

# VENTILATION

## REMOVAL AND INSTALLATION

**Pre-removal and Post-installation Operations**
Rear Bumper Removal and Installation (Refer to GROUP 51.)

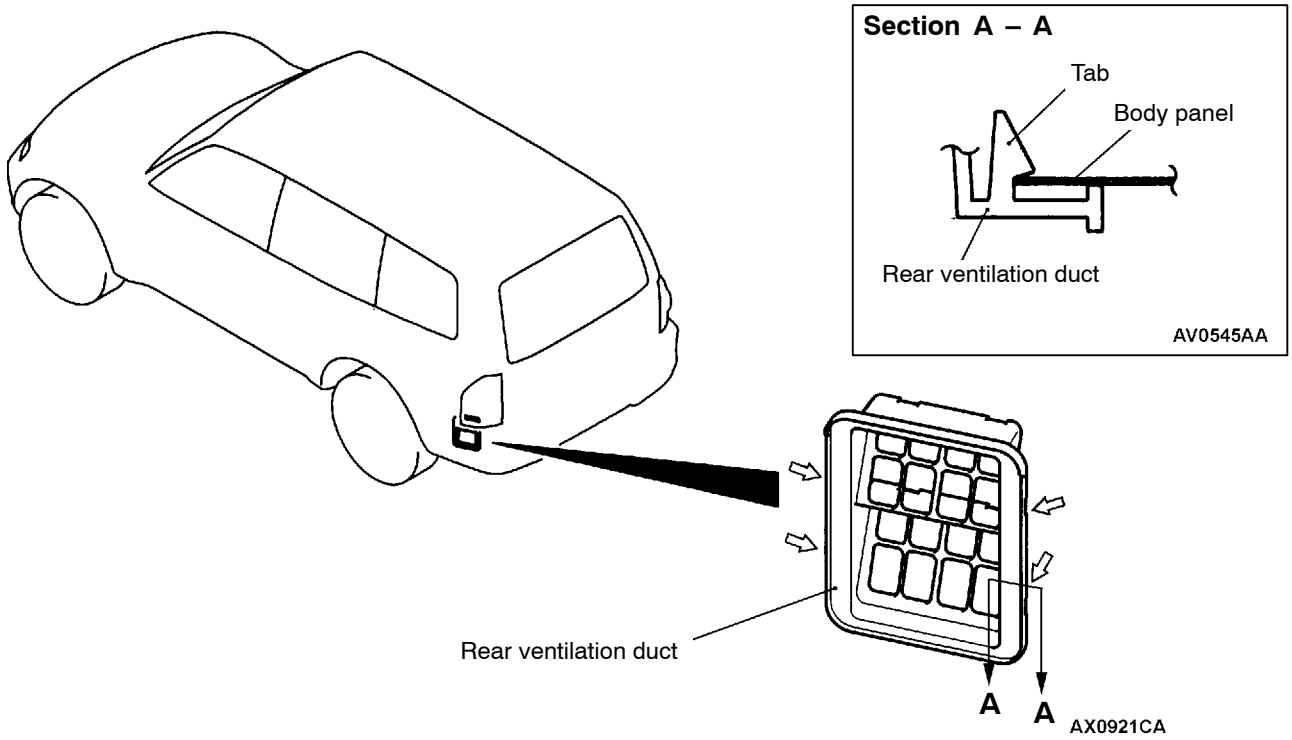


NOTE
⇦ : indicates the tab positions.

Purchased from www.WorkshopManuals.co.uk

www.WorkshopManuals.co.uk

# HEATER, AIR CONDITIONER AND VENTILATION <AUTOMATIC A/C>

**Click on the applicable bookmark to selected the required model year.**

Purchased from www.WorkshopManuals.co.uk

www.WorkshopManuals.co.uk


# HEATER, AIR CONDITIONER AND VENTILATION <AUTOMATIC A/C>

## CONTENTS


**SERVICE SPECIFICATIONS** . . . . . 2

**LUBRICANTS** . . . . . 2

**SPECIAL TOOLS** . . . . . 3

**TROUBLESHOOTING <FRONT A/C>** . . . . . 3

**TROUBLESHOOTING <REAR A/C>** . . . . . 3

**ON-VEHICLE SERVICE** . . . . . 24

Magnetic Clutch Test . . . . . 24

Idle Up Operation Check <Petrol> . . . . . 25

**FRONT A/C** . . . . . 25

Automatic A/C Control Panel Assembly (A/C-ECU) . . . . . 25

Blower Linear Controller . . . . . 26

Air Mix Damper Motor and Air Outlet Changeover Damper Motor . . . . . 27

Heater Water Temperature Sensor . . . . . 29

**PHOTO SENSOR** . . . . . 30

**OUTSIDE AIR TEMPERATURE SENSOR** . . 30

**REAR A/C** . . . . . 30

Electric Motor for Air Outlet Changeover Damper . . . . . 30

**REFRIGERANT LINE** . . . . . 31

**COMPRESSOR** . . . . . 33


Purchased from www.WorkshopManuals.co.uk

www.WorkshopManuals.co.uk

# SERVICE SPECIFICATIONS

| Item | | | Standard value |
|---|---|---|---|
| Resistance value of the potentiometer for the air mix damper (front A/C) kΩ | | | Approx. 0.96 - 5.76 |
| Resistance value of the potentiometer for the air outlet changeover damper (front A/C) kΩ | | | Approx. 0.96 - 5.76 |
| Resistance of the rear air conditioner switch (temperature control switch) <except rear heater (floor console)> kΩ | | | 0 - 3 |
| Resistance of the potentiometer for the air mix damper <Rear heater, dual A/C> kΩ | | | 1.2 - 4.8 |
| Resistance value of the resistor (rear A/C) Ω | Between terminals 1 and 6 | | 4.9 ± 7 % |
| | Between terminals 1 and 3 | | 1.25 ± 7% |
| Air compressor air gap mm | | | 0.35 - 0.65 |
| Idle speed r/min (N or P range) | Petrol | | 600 ± 50 |
| Idle-up speed r/min (N or P range) | Petrol | When the A/C is under low load | 700 ± 50 |
| | | When the A/C is under medium load | 800 ± 50 |
| | | When the A/C is under high load | 1,000 ± 50 |

# LUBRICANTS

| Item | | Brand | Quantity |
|---|---|---|---|
| Compressor oil ml | Single A/C <except vehicles with rear cooler> | DENSO OIL 8 | 120 ± 20 |
| | Single air conditioner <vehicles with rear cooler>, dual air conditioner | DENSO OIL 8 | 140 ± 20 |
| Pipe connections | | DENSO OIL 8 | As required |
| Refrigerant g | Single A/C <except vehicles with rear cooler> | R134a (HFC-134a) | 500 ± 20 |
| | Single air conditioner <vehicles with rear cooler>, dual air conditioner | R134a (HFC-134a) | 780 ± 20 |

Purchased from www.WorkshopManuals.co.uk

www.WorkshopManuals.co.uk

# SPECIAL TOOLS

| Tools | No. | Name | Application |
|---|---|---|---|
| 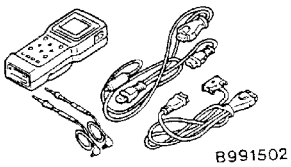 B991502 | MB991502 | MUT-II sub assembly | Front A/C check |
| 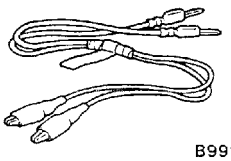 B991529 | MB991529 | Diagnosis code checking harness | Check of the full-automatic air conditioner by using a voltmeter |
| A 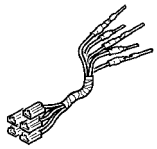 B 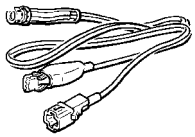 C 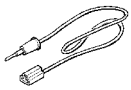 D C991223 | MB991223<br>A: MB991219<br>B: MB991220<br>C: MB991221<br>D: MB991222 | Harness set<br>A: Check harness<br>B: LED harness<br>C: LED harness adapter<br>D: Probe | Continuity check and voltage measurement at harnesses or connector<br>A: For checking connector pin contact pressure<br>B: For checking the power supply circuit<br>C: For checking the power supply circuit<br>D: For connecting commercial tester |

# TROUBLESHOOTING <FRONT A/C>

## DIAGNOSIS TROUBLESHOOTING FLOW

Refer to GROUP 00 - How to Use Troubleshooting/Inspection Service Points.

## DIAGNOSIS FUNCTION

### METHOD OF READING DIAGNOSIS CODES

Connect the MUT-II to the 16-pin diagnosis connector.
(Refer to GROUP 00 - How to Use Troubleshooting/Inspection Service Points.)

### METHOD OF ERASING DIAGNOSIS CODES

Refer to GROUP 00 - How to Use Troubleshooting/Inspection Service Points.

Purchased from www.WorkshopManuals.co.uk

www.WorkshopManuals.co.uk

## INSPECTION CHART FOR DIAGNOSIS CODES

| Code No. | Diagnosis item | Reference page |
|---|---|---|
| 11 | Inside air temperature sensor system (open circuit) | 55B-4 |
| 12 | Inside air temperature sensor system (short circuit) | 55B-4 |
| 13 | Outside air temperature sensor system (open circuit) | 55B-4 |
| 14 | Outside air temperature sensor system (short circuit) | 55B-4 |
| 15 | Heater water temperature sensor system (open circuit) | 55B-5 |
| 16 | Heater water temperature sensor system (short circuit) | 55B-5 |
| 21 | Air thermo sensor system (open circuit) | 55B-5 |
| 22 | Air thermo sensor system (short circuit) | 55B-5 |
| 31 | Potentiometer system for the air mix damper | 55B-6 |
| 32 | Potentiometer system for the air outlet changeover damper | 55B-7 |

## INSPECTION PROCEDURE FOR DIAGNOSIS CODES

| Code No.11, 12 Inside air temperature sensor system | Probable cause |
|---|---|
| Code No.11 is set when the inside air temperature circuit inside the A/C-ECU is open. Meanwhile, code No.12 is set when it is short. | Malfunction of the A/C-ECU |

Replace the automatic A/C control panel assembly (A/C-ECU).

| Code No.13, 14 Outside air temperature sensor system | Probable cause |
|---|---|
| Code No.13 is set when the outside air temperature sensor circuit is open. Meanwhile, code No.14 is set when it is short. | • Malfunction of the outside air temperature sensor<br>• Malfunction of connector or harness<br>• Malfunction of the A/C-ECU |

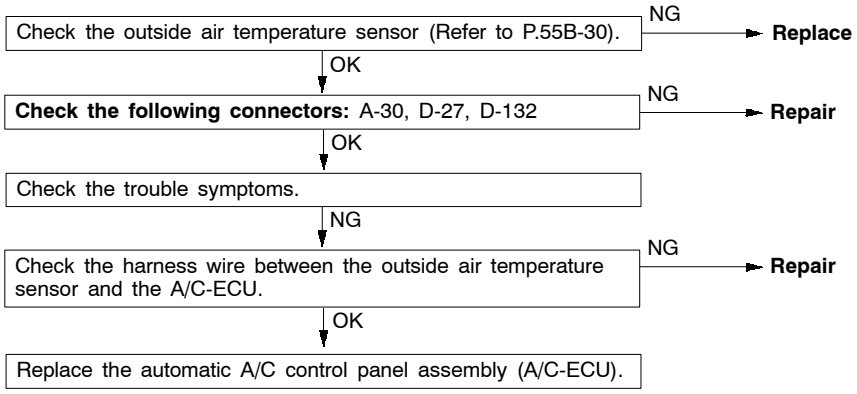


Purchased from www.WorkshopManuals.co.uk

www.WorkshopManuals.co.uk

| Code No.15, 16 Heater water temperature sensor system | Probable cause |
|---|---|
| Code No.15 is output when the heater water temperature sensor circuit is open. Code No.16 is output when that circuit is short. | • Malfunction of the heater water temperature sensor<br>• Malfunction of connector or harness<br>• Malfunction of the A/C-ECU |

Check the heater water temperature sensor (Refer to P.55B-29).
- NG → **Replace**
- OK ↓

**Check the following connectors:** D-19, D-132
- NG → **Repair**
- OK ↓

Check the trouble symptoms.
- NG ↓

Check the harness wire between the heater water temperature sensor and the A/C-ECU.
- NG → **Repair**
- OK ↓

Replace the automatic A/C control panel assembly (A/C-ECU).

| Code No.21, 22 Air thermo sensor system | Probable cause |
|---|---|
| Code No.21 is set when the air thermo sensor circuit is open. Meanwhile, code No.22 is set when it is short. | • Malfunction of the air thermo sensor<br>• Malfunction of connector or harness<br>• Malfunction of the A/C-ECU |

Check the air thermo sensor (Refer to GROUP 55A - Front A/C).
- NG → **Replace**
- OK ↓

**Check the following connectors:** D-129, D-132
- NG → **Repair**
- OK ↓

Check the trouble symptoms.
- NG ↓

Check the harness wire between the air thermo sensor and the A/C-ECU.
- NG → **Repair**
- OK ↓

Replace the automatic A/C control panel assembly (A/C-ECU).

Purchased from www.WorkshopManuals.co.uk

www.WorkshopManuals.co.uk

| Code No.31 Potentiometer system for the air mix damper | Probable cause |
|---|---|
| This diagnosis code is set when the potentiometer for the air mix damper does not send any signal to the A/C-ECU due to short or open circuit. | • Malfunction of the potentiometer system for the air mix damper<br>• Malfunction of connector or harness<br>• Malfunction of the A/C-ECU |

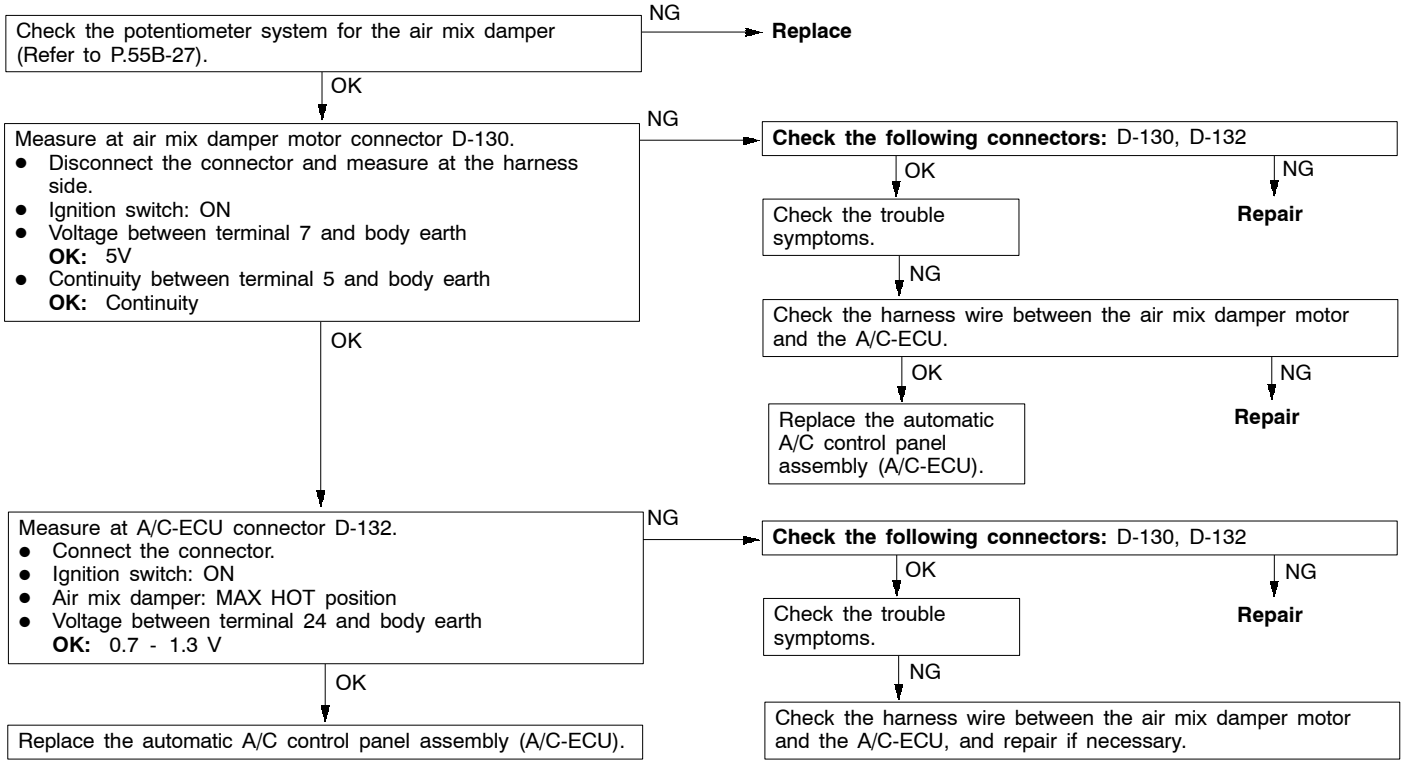


Purchased from www.WorkshopManuals.co.uk

www.WorkshopManuals.co.uk

| Code No.32 Potentiometer system for the air outlet changeover damper | Probable cause |
|---|---|
| This diagnosis code is set when the potentiometer for the air outlet changeover damper does not send any signal to the A/C-ECU due to open or short circuit. | • Malfunction of the potentiometer for the air outlet changeover damper<br>• Malfunction of connector or harness<br>• Malfunction of the A/C-ECU |

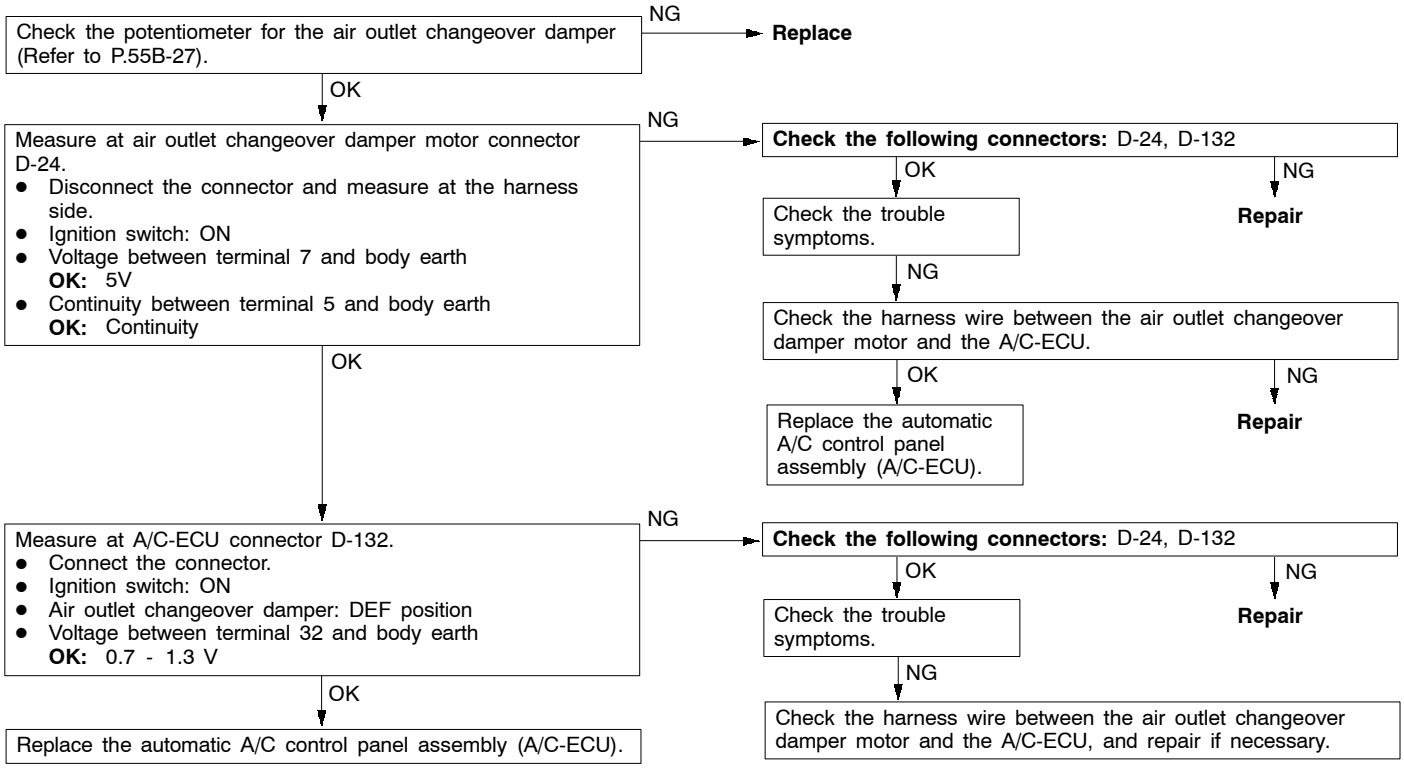


## INSPECTION CHART FOR TROUBLE SYMPTOMS

| Trouble symptom | Inspection procedure No. | Reference page |
|---|---|---|
| Communication with MUT-II is impossible. | 1 | 55B-8 |
| The air conditioner does not operate at all. | 2 | 55B-9 |
| The air conditioner display does not appear on the center display screen. | 3 | 55B-9 |
| A/C outlet air temperature can not be set. | 4 | 55B-10 |
| The blower does not operate. | 5 | 55B-11 |
| The blower air volume can not be changed. | 6 | 55B-12 |
| Air outlet vent cannot be changed. | 7 | 55B-12 |
| Inside/outside air changeover is not possible. | 8 | 55B-13 |
| The rear defogger does not operate. | 9 | 55B-14 |
| The condenser fan does not operate <except 4D56>. | 10 | 55B-15 |
| The condenser fan does not operate <4D56>. | 11 | 55B-16 |

Purchased from www.WorkshopManuals.co.uk

www.WorkshopManuals.co.uk

# INSPECTION PROCEDURES FOR TROUBLE SYMPTOMS

## Inspection procedure 1

| Communication with the MUT-II is not possible. | Probable cause |
|---|---|
| If communication with all other systems is not possible, there is a high possibility that there is a malfunction of the diagnosis line. If only the A/C system can not communicate with the MUT-II, the diagnosis line between the diagnosis connector and the A/C-ECU may be defective. | • Malfunction of harness or connector<br>• Malfunction of the A/C-ECU |

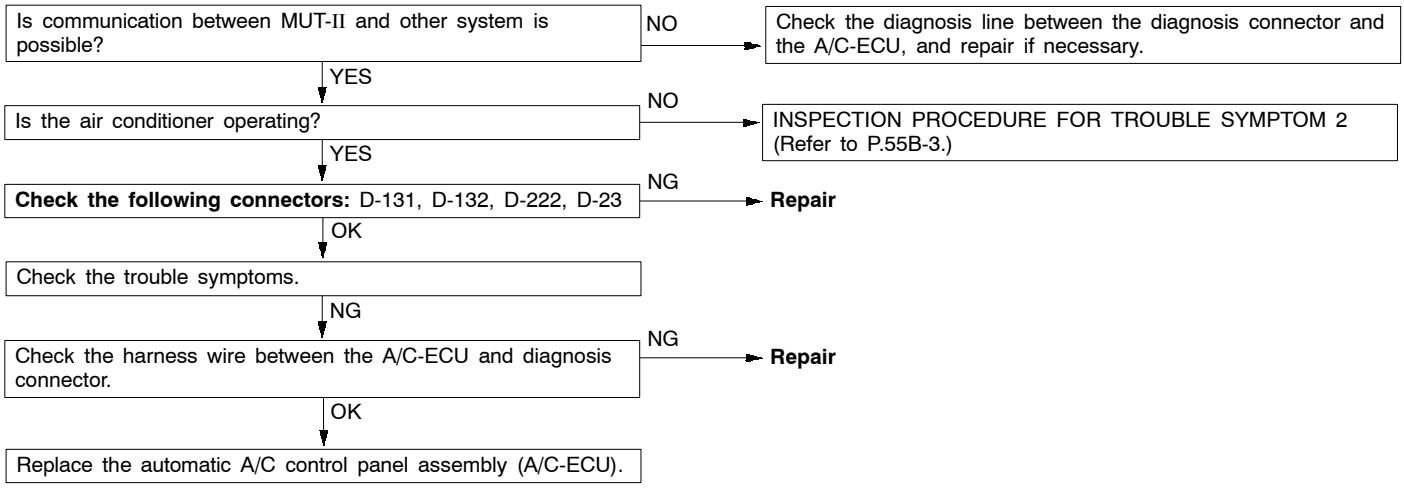


Purchased from www.WorkshopManuals.co.uk

www.WorkshopManuals.co.uk

## Inspection procedure 2

| The air conditioner does not operate at all. | Probable cause |
|---|---|
| The power supply system (including earth) for the A/C-ECU may be defective. In addition, the A/C-ECU may be inoperative due to a defective harness (such as short). | • Malfunction of harness or connector<br>• Malfunction of the A/C-ECU |

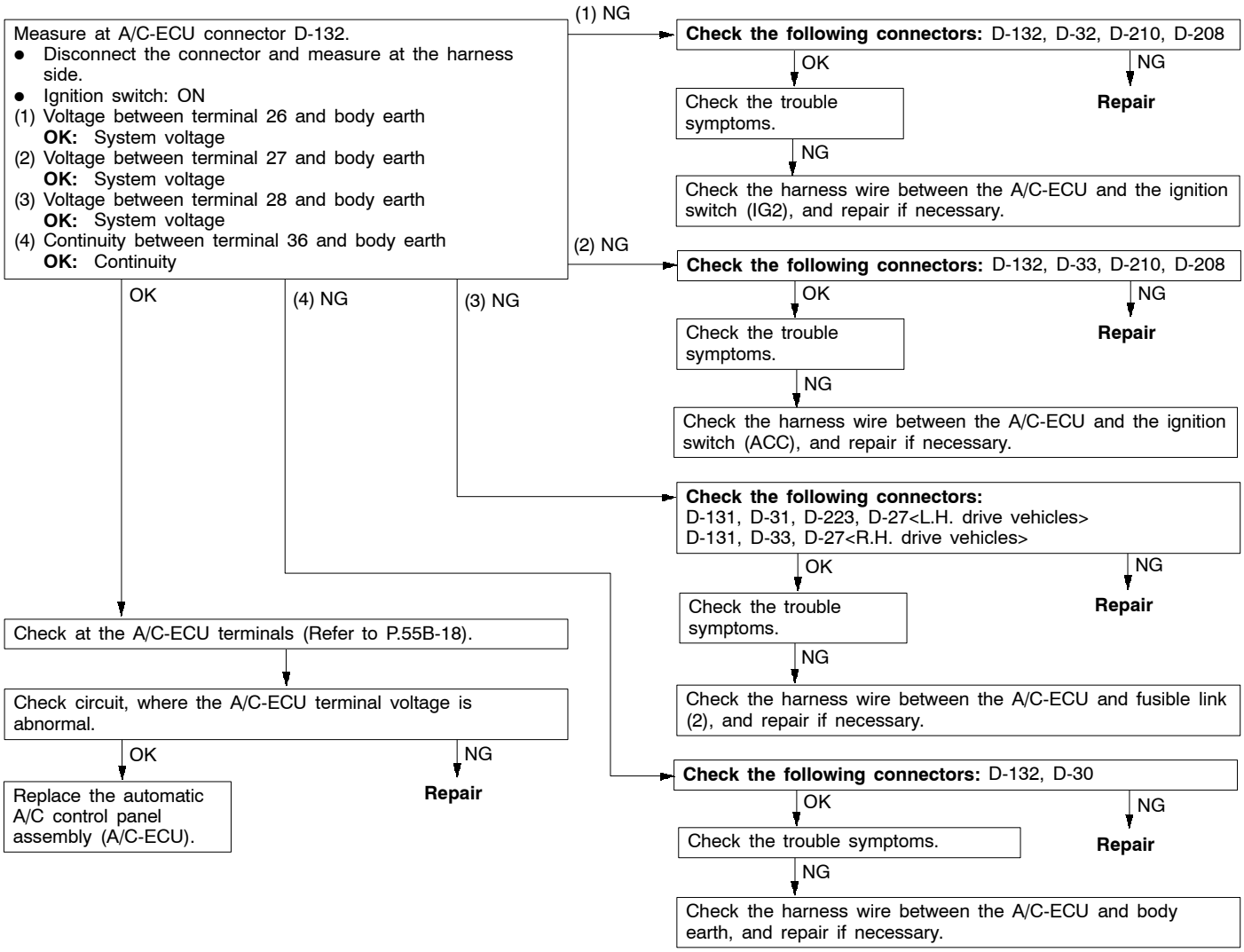


## Inspection procedure 3

| The air conditioner display does not appear on the center display screen. | Probable cause |
|---|---|
| Check the harness wires between the A/C-ECU and the center display, and repair if necessary. | • Malfunction of harness or connector<br>• Malfunction of the A/C-ECU |

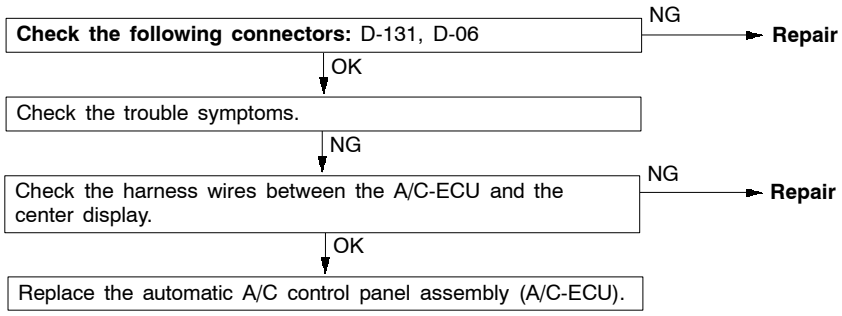


Purchased from www.WorkshopManuals.co.uk

www.WorkshopManuals.co.uk

## Inspection procedure 4

| A/C outlet air temperature can not be set. | Probable cause |
|---|---|
| If the air outlet temperature can not be changed after a A/C temperature is set, sensor(s) or the air mix damper may be defective. | • Malfunction of the inside air temperature sensor<br>• Malfunction of the outside air temperature sensor<br>• Malfunction of the heater water temperature sensor<br>• Malfunction of the photo sensor<br>• Malfunction of the electric motor for the air mix damper<br>• Malfunction of harness or connector<br>• Malfunction of the A/C-ECU |

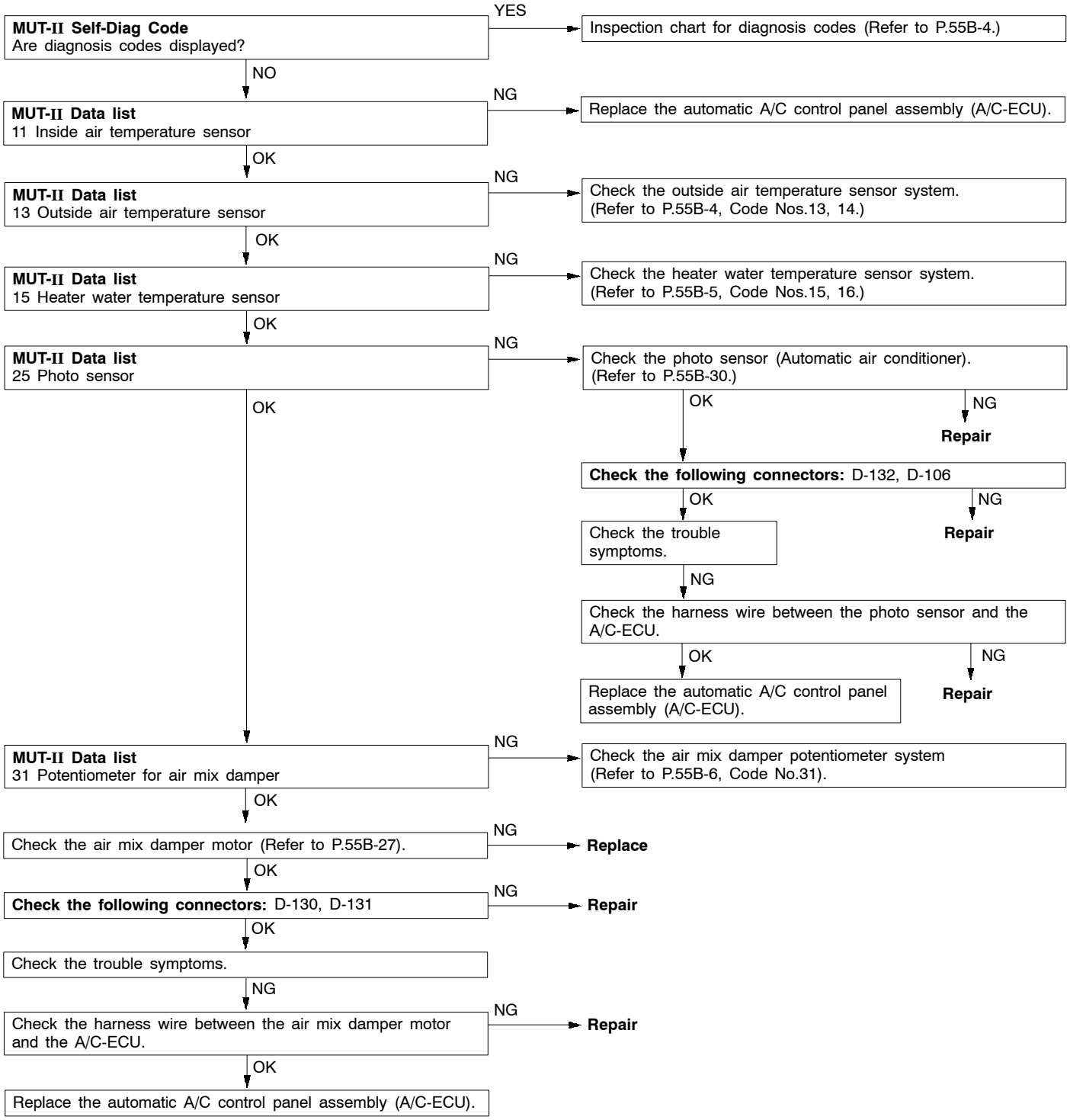


Purchased from www.WorkshopManuals.co.uk

www.WorkshopManuals.co.uk

## Inspection procedure 5

| The blower does not operate. | Probable cause |
|---|---|
| If no air comes out of the blower even though the blower switch is on, the cause is probably a malfunction of the front blower relay circuit. | • Malfunction of the front blower relay<br>• Malfunction of the blower linear controller<br>• Malfunction of the blower motor<br>• Malfunction of harness or connector<br>• Malfunction of the A/C-ECU |

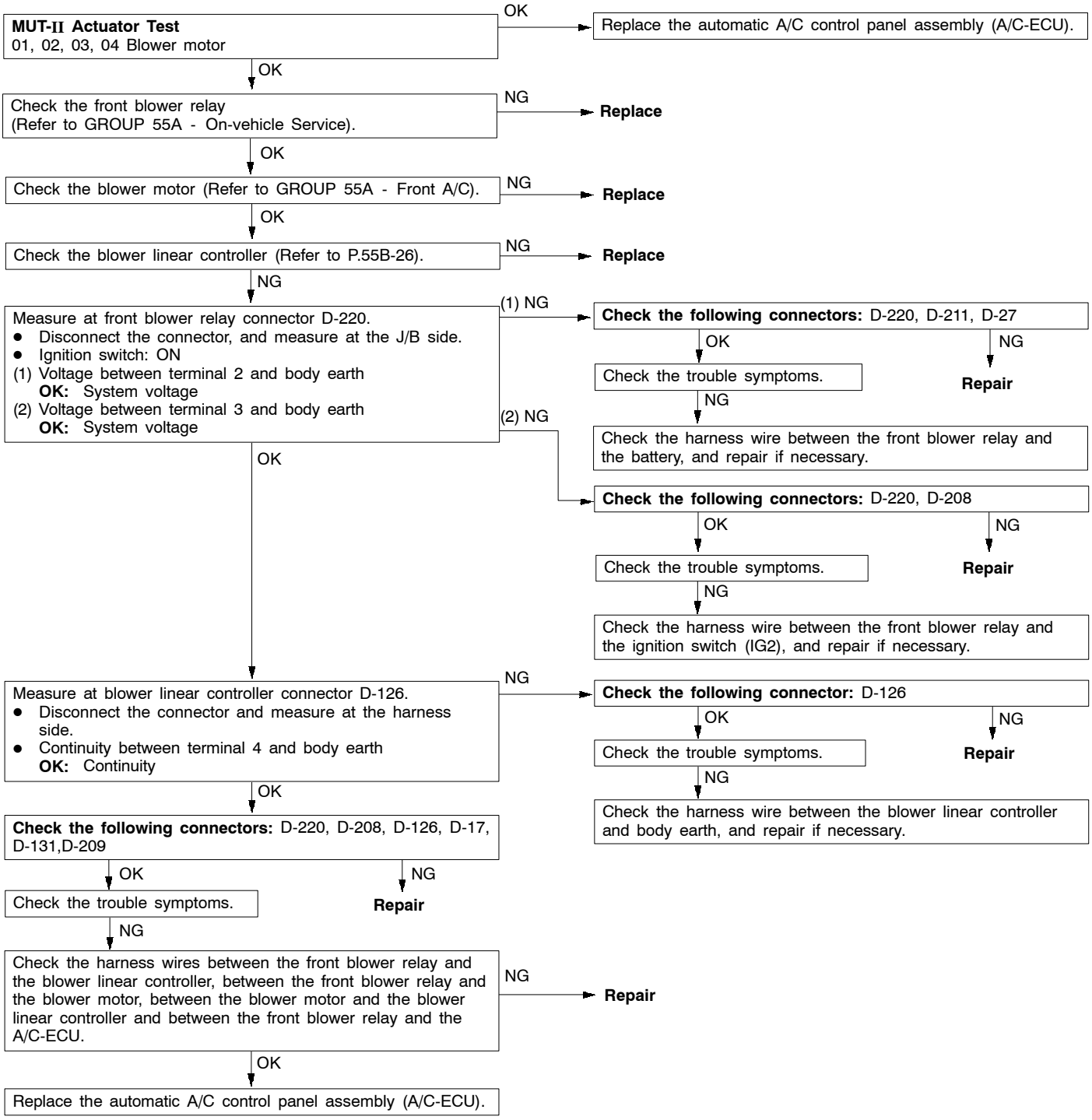


Purchased from www.WorkshopManuals.co.uk

www.WorkshopManuals.co.uk

## Inspection procedure 6

| The blower air volume can not be changed. | Probable cause |
|---|---|
| If the air volume can not be controlled, the blower linear controller circuit may be defective. | • Malfunction of the blower linear controller<br>• Malfunction of harness or connector<br>• Malfunction of the A/C-ECU |

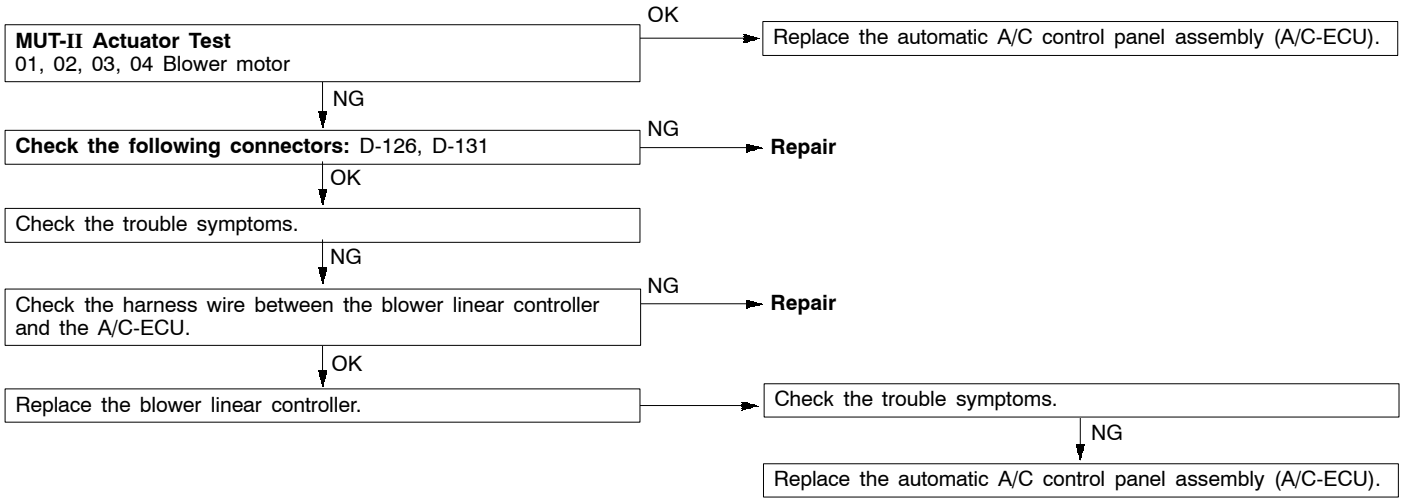


## Inspection procedure 7

| Air outlet vent cannot be changed. | Probable cause |
|---|---|
| When the air outlet vents cannot be changed even if the changeover switch is operated, the air outlet changeover damper motor circuit may be defective. | • Malfunction of the electric motor for the air outlet changeover damper<br>• Malfunction of harness or connector<br>• Malfunction of the A/C-ECU |

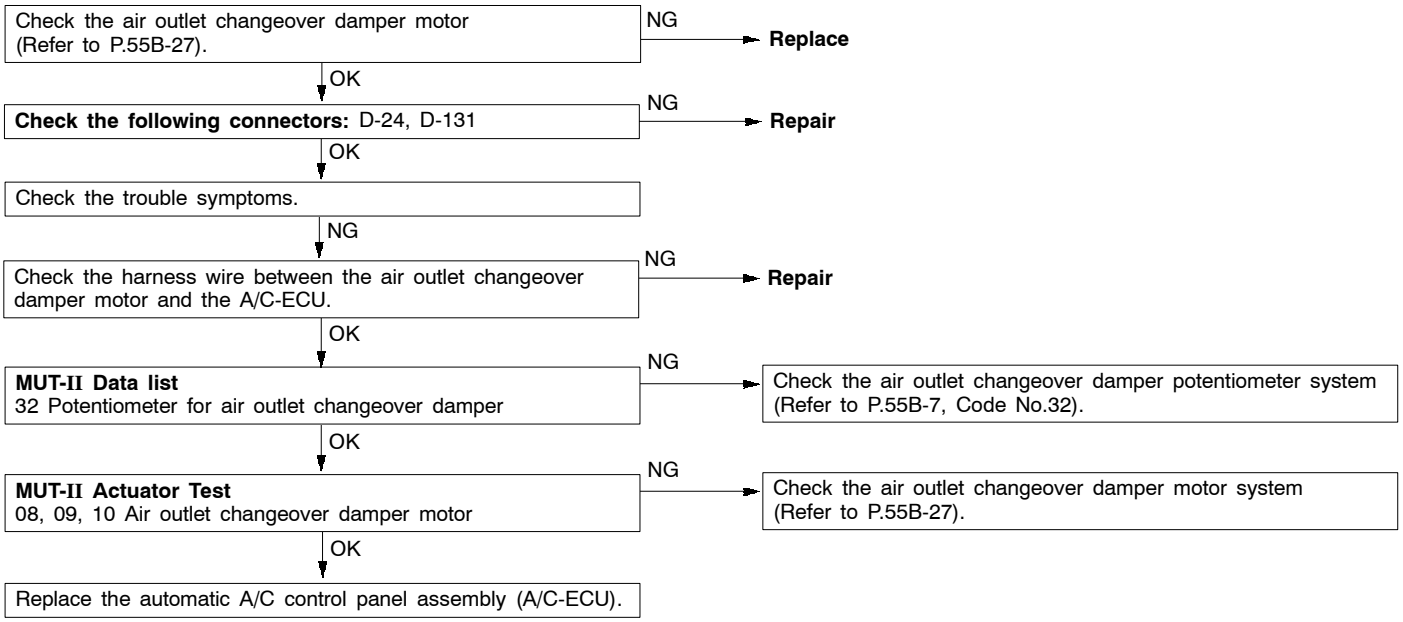


Purchased from www.WorkshopManuals.co.uk

www.WorkshopManuals.co.uk

## Inspection procedure 8

| Inside/outside air changeover is not possible. | Probable cause |
|---|---|
| When inside air cannot be changed to outside air or vice versa even if its changeover switch is on, the inside/outside air changeover damper motor system may be defective. | • Malfunction of the inside/outside air changeover damper motor<br>• Malfunction of harness or connector<br>• Malfunction of the A/C-ECU |

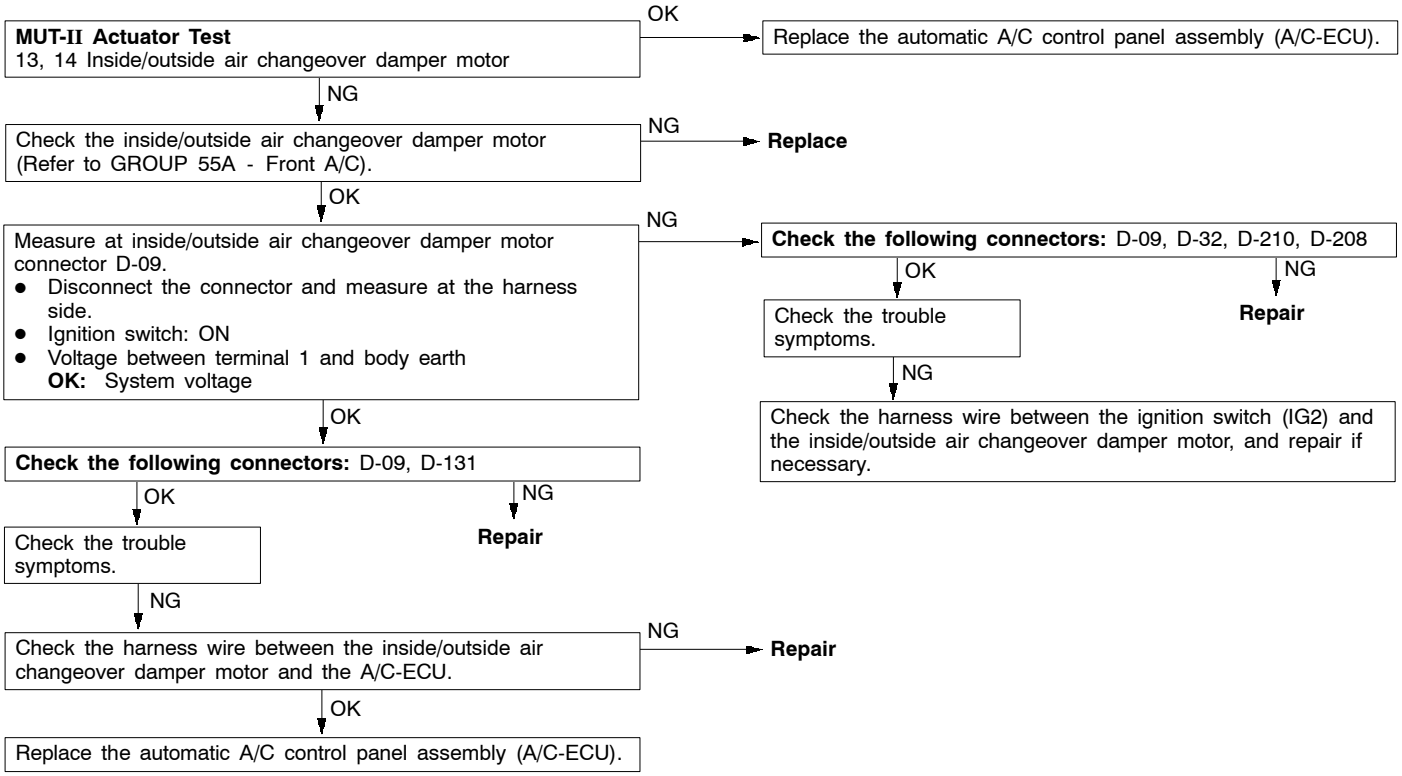


Purchased from www.WorkshopManuals.co.uk

www.WorkshopManuals.co.uk

## Inspection procedure 9

| The rear defogger does not operate. | Probable cause |
|---|---|
| When the rear defogger does not operate even if the rear defogger switch is on (the defogger remains on for twenty minutes due to a timer function), the rear defogger relay system may be defective. | • Malfunction of the defogger relay<br>• Malfunction of harness or connector<br>• Malfunction of the A/C-ECU |

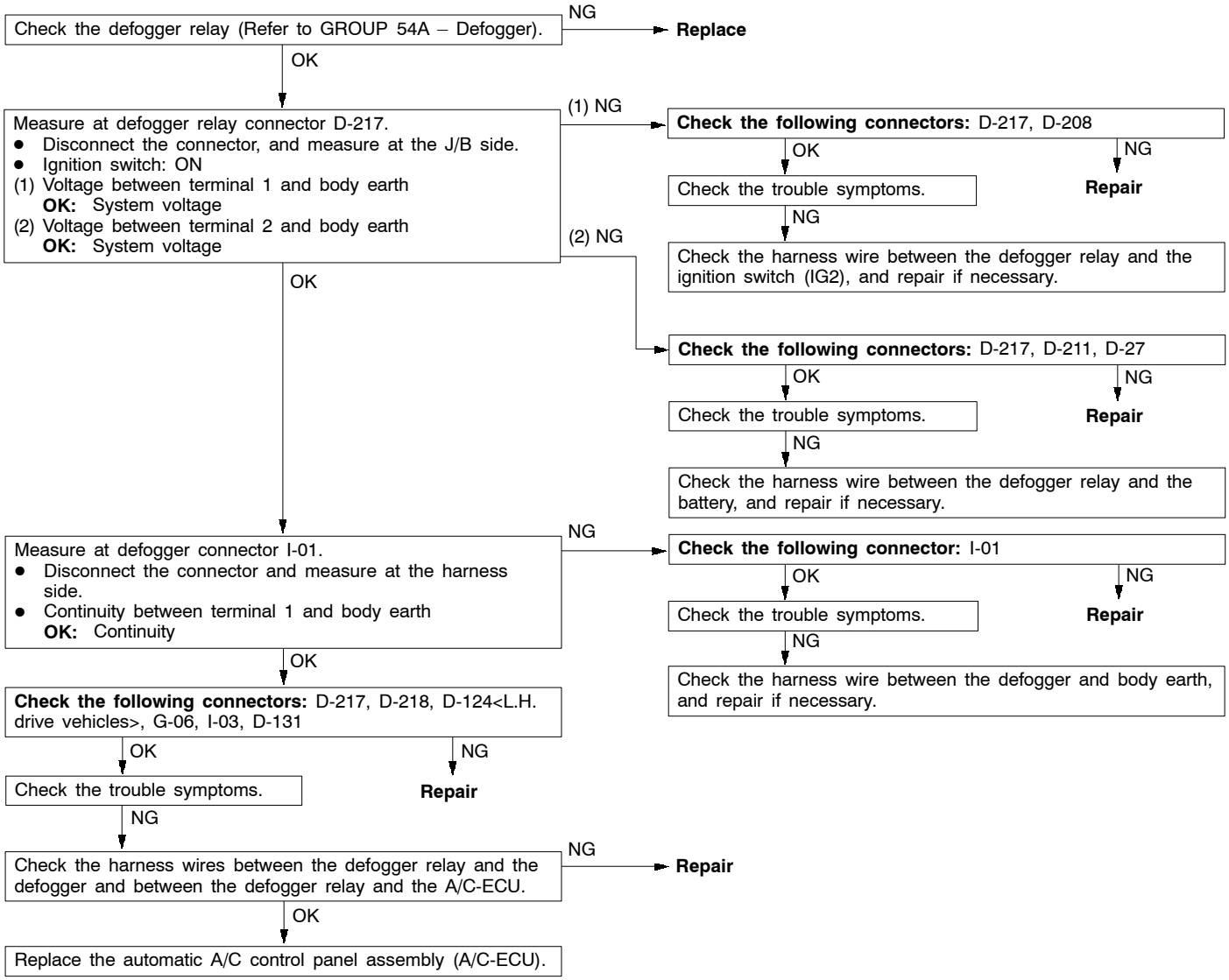


Purchased from www.WorkshopManuals.co.uk

www.WorkshopManuals.co.uk

## Inspection procedure 10

| The condenser fan does not operate <except 4D56>. | Probable cause |
|---|---|
| If the condenser fan does not operate, the condenser fan relay or motor may be defective. | • Malfunction of the condenser fan relay<br>• Malfunction of harness or connector<br>• Malfunction of the engine-A/T-ECU <petrol> or engine-ECU <diesel> |

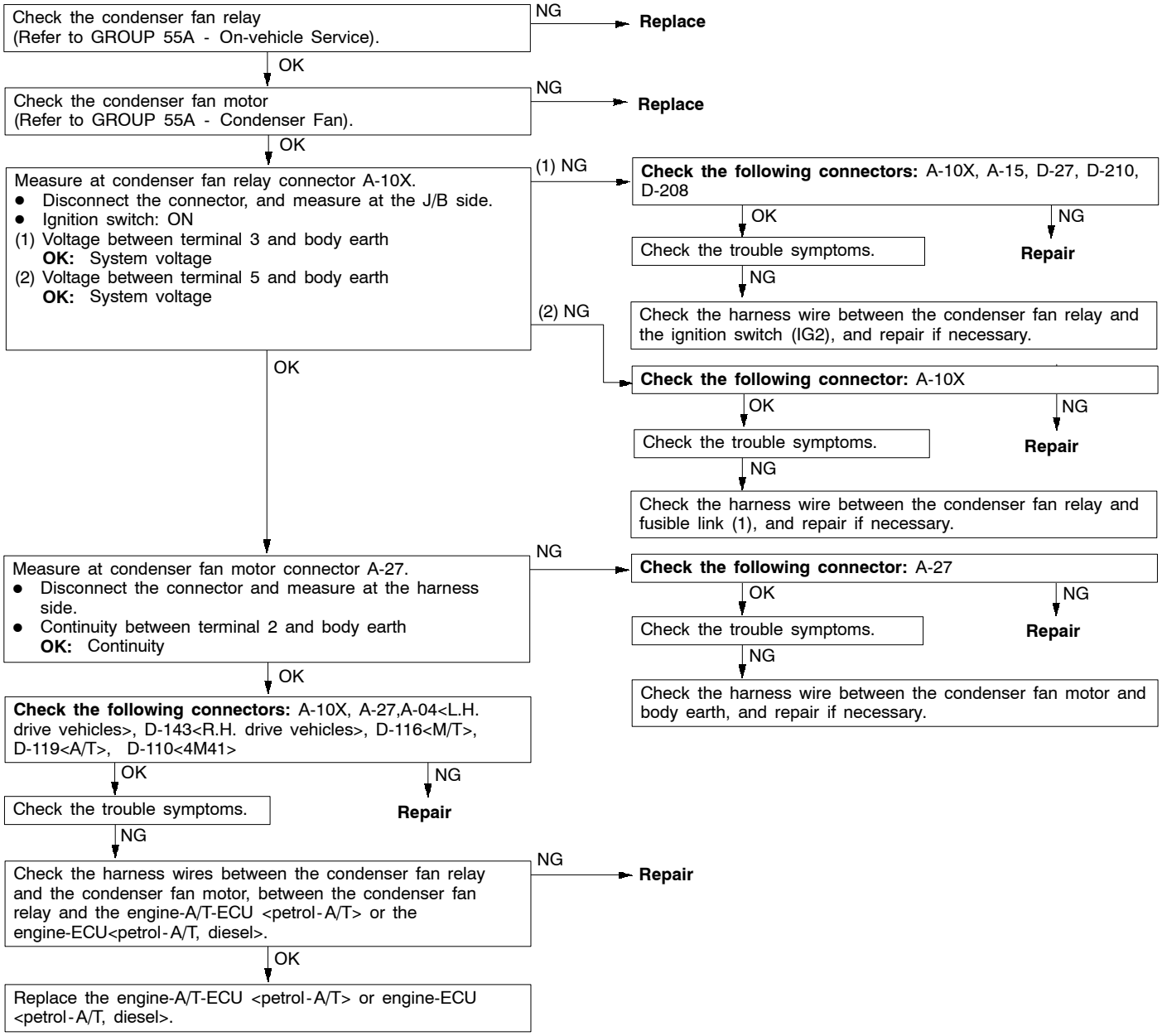


Purchased from www.WorkshopManuals.co.uk

www.WorkshopManuals.co.uk

## Inspection procedure 11

| The condenser fan does not operate <4D56>. | Probable cause |
|---|---|
| If the condenser fan does not operate, the condenser fan relay or motor may be defective. | • Malfunction of the condenser fan relay<br>• Malfunction of harness or connector<br>• Malfunction of the engine-A/T-ECU <petrol> or engine-ECU <diesel> |

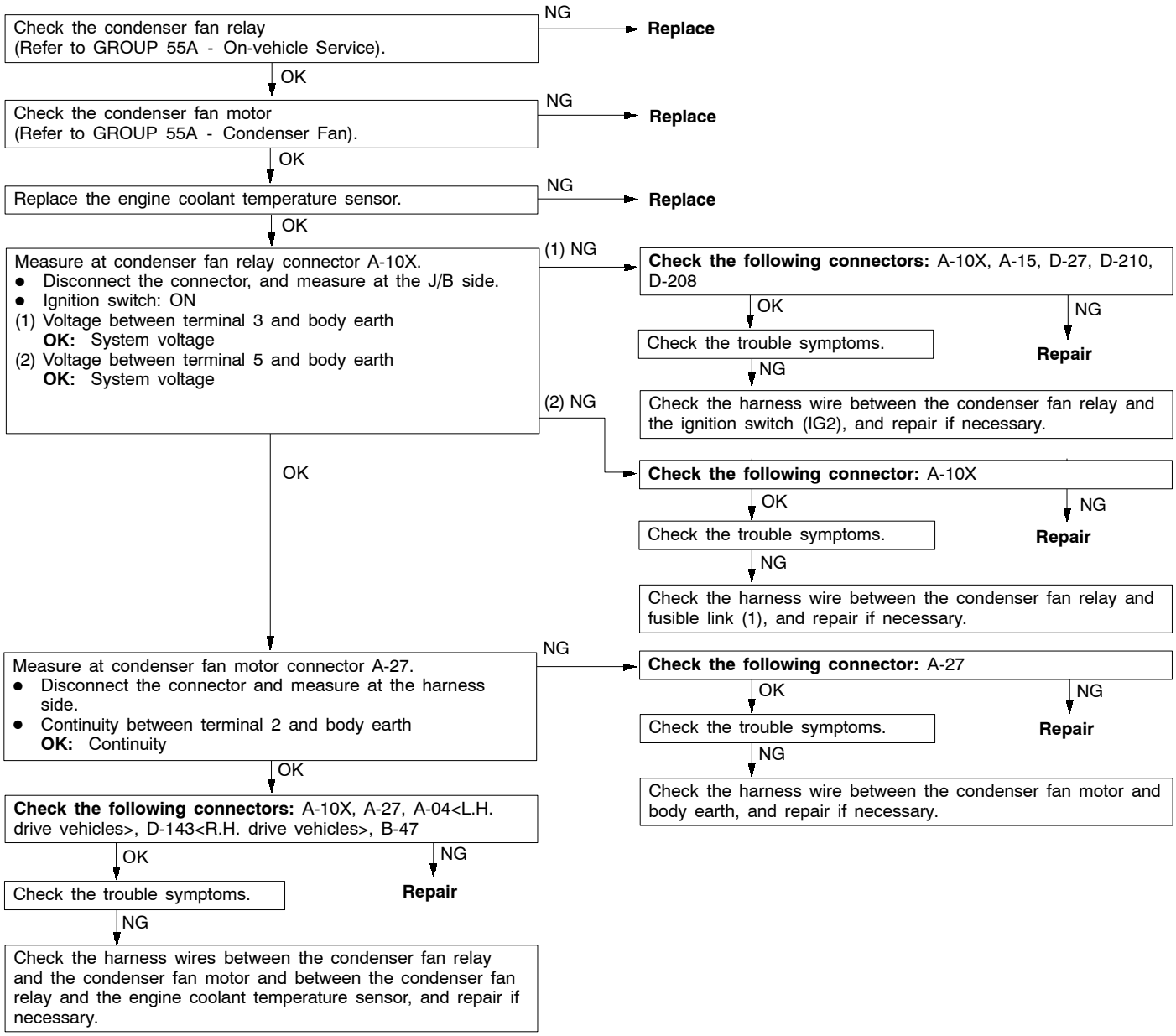


Purchased from www.WorkshopManuals.co.uk

www.WorkshopManuals.co.uk

## DATA LIST REFERENCE TABLE

| Item No. | Check item | Inspection contents | |
|---|---|---|---|
| 11 | Inside air temperature sensor | Ignition switch: ON | Inside air temperature and temperature displayed on the MUT-II are identical. |
| 13 | Outside air temperature sensor | Ignition switch: ON | Outside air temperature and temperature displayed on the MUT-II are identical. |
| 15 | Heater water temperature sensor | Ignition switch: ON | Heater core surface temperature and temperature displayed on the MUT-II are identical. |
| 21 | Air thermo sensor | Ignition switch: ON | Evaporator outlet temperature and temperature displayed on the MUT-II are identical. |
| 25 | Photo sensor | Ignition switch: ON | Amount of incident light is proportional to voltage displayed on the MUT-II. |
| 31 | Potentiometer for the air mix damper | Ignition switch: ON<br>Damper position: MAX HOT | Opening angle: Approximately 100% |
| | | Ignition switch: ON<br>Damper position: MAX COOL | Opening angle: Approximately 0% |
| 32 | Potentiometer for the air outlet changeover damper | Ignition switch: ON<br>Damper position: FACE | Opening angle: Approximately 0% |
| | | Ignition switch: ON<br>Damper position: FOOT | Opening angle: Approximately 60% |
| | | Ignition switch: ON<br>Damper position: FOOT/DEF | Opening angle: Approximately 80% |
| | | Ignition switch: ON<br>Damper position: DEF | Opening angle: Approximately 100% |

## ACTUATOR TEST TABLE

| Item No. | Check item | Drive Contents |
|---|---|---|
| 01 | Blower motor | Stopped |
| 02 | | Low speed |
| 03 | | Medium speed |
| 04 | | High speed |
| 05 | Electric motor for the air mix damper | Opening angle: Approximately 0% |
| 06 | | Opening angle: Approximately 50% |
| 07 | | Opening angle: Approximately 100% |
| 08 | Electric motor for the air outlet changeover damper | FACE |
| 09 | | FOOT |
| 10 | | DEF |
| 11 | Compressor ON/OFF | OFF |
| 12 | | ON |
| 13 | Inside/outside air changeover damper motor | Outside air |
| 14 | | Inside air |

Purchased from www.WorkshopManuals.co.uk

www.WorkshopManuals.co.uk

## CHECK AT A/C-ECU TERMINALS

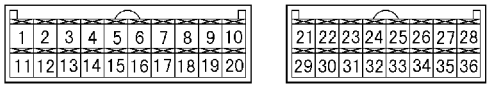


W0763AU

| Terminal No. | Check item | Check conditions | Normal condition |
|---|---|---|---|
| 1 | Electric motor for the air mix damper (MAX COOL) | When the damper flap is moving to the MAX COOL position. | 10 V |
| | | When the damper flap is moving to the MAX HOT position. | Faint voltage (0.5 V) |
| 2 | Electric motor for the air outlet changeover damper (FACE) | When the damper flap is moving to the FACE position. | 10 V |
| | | When the damper flap is moving to the DEF position. | Faint voltage (0.5 V) |
| 3 | Inside/outside air changeover damper motor (Inside air) | When the damper flap is moving to the inside air recirculation position. | Faint voltage (0.5 V) |
| | | When the damper flap is moving to the the outside air induction position. | 10 V (when the motor is stopped) |
| 4 | Inside/outside air changeover damper motor (Outside air) | When the damper flap is moving to the inside air recirculation position. | 10 V (when the motor is stopped) |
| | | When the damper flap is moving to the the outside air induction position. | Faint voltage (0.5 V) |
| 5 | Input signal from dual pressure switch | Dual pressure switch: OFF | 0 V |
| | | Dual pressure switch: ON | System voltage |
| 6 | Multi center display unit communication line | Ignition switch: ON | Hi: 4 - 5 V<br>Lo: 0 - 1 V |
| 7 | Output to the engine-A/T-ECU <petrol> or engine-ECU <diesel>. | When the A/C is off. | 0 V |
| | | When the A/C is in operation (When compressor is operating) | System voltage |
| 9 | Input from lock sensor <petrol> | When the compressor is operating | 0 - 0.75 V (pulse signal) |
| 10 | Output to blower linear controller | When the blower is operating | 0 - 3.5 V (Effective alternating voltage) |
| 11 | Electric motor for the air mix damper (MAX HOT) | When the damper flap is moving to the MAX COOL position. | Faint voltage (0.5 V) |
| | | When the damper flap is moving to the MAX HOT position. | 10 V |
| 12 | Electric motor for the air outlet changeover damper (DEF) | When the damper flap is moving to the FACE position. | Faint voltage (0.5 V) |
| | | When the damper flap is moving to the DEF position. | 10 V |
| 13 | Engine-ECU <Diesel for cold zone> | Blower switch: ON<br>Air outlet temperature: FOOT, FOOT/DEF, DEF<br>Set temperature: MAX HOT (32°C) | System voltage |
| 14 | Blower relay | When the blower is stopped | System voltage |
| | | When the blower is operating | 0 V |

Purchased from www.WorkshopManuals.co.uk

www.WorkshopManuals.co.uk

| Terminal No. | Check item | Check conditions | Normal condition |
|---|---|---|---|
| 15 | Rear defogger | Rear defogger: OFF | System voltage |
| | | Rear defogger: ON | 1.5 V or less |
| 16 | Multi center display unit communication line | Ignition switch: ON | Hi: 4 - 5 V<br>Lo: 0 - 1 V |
| 17 | Multi center display unit communication line | Ignition switch: ON | Hi: 4 - 5 V<br>Lo: 0 - 1 V |
| 18 | Multi center display unit communication line shield | At all times | 0 V |
| 19 | Diagnosis output | Ignition switch: ON | A voltmeter needle fluctuates between 0 and 12 V. |
| 20 | Input from A/C compressor relay | When the A/C is off. | 0 V |
| | | When the A/C is in operation (When compressor is operating) | System voltage |
| 21 | Power supply to potentiometer | At all times | 5 V |
| 22 | Input from outside air temperature sensor | Sensor temperature: 25°C (1.7 kΩ) | 1.9 V |
| 23 | Input from heater water temperature sensor | Sensor temperature: 25°C (5 kΩ) | 2.8 V |
| 24 | Input from potentiometer for air mix damper | When the damper flap is moving to the MAX HOT position. | 0.7 - 1.3 V |
| 25 | Power supply to illumination | Lighting switch: ON | System voltage |
| 26 | Power supply to ignition switch (IG2) | Ignition switch: ON | System voltage |
| 27 | Power supply to ignition switch (ACC) | Ignition switch: ACC | System voltage |
| 28 | Backup power supply | At all times | System voltage |
| 29 | Earth to sensor and potentiometer | At all times | 0 V |
| 30 | Input from air thermo sensor | Sensor temperature: 25°C (1.5 kΩ) | 2.2 V |
| 31 | Photo sensor (+) | During 800 kcal/m$^2$ - h | 1 V |
| 32 | Input from potentiometer for the air outlet changeover damper | When the damper flap is moving to the DEF position. | 0.7 - 1.3 V |
| 33 | Diagnosis input | Ignition switch: ON | 0 V |
| 34 | Compressor lock signal (ignition signal) | Engine speed: 3 000 r/min | 0.3 - 3.0 |
| 35 | Illumination earth | At all times | Continuity |
| 36 | Earth | At all times | Continuity |

## CHECK AT ENGINE-A/T-ECU OR ENGINE-ECU TERMINALS

Refer to GROUP 13A – Troubleshooting <petrol> or GROUP 13B – Troubleshooting <diesel>.

Purchased from www.WorkshopManuals.co.uk

www.WorkshopManuals.co.uk

# TROUBLESHOOTING <REAR A/C>

## INSPECTION CHART FOR TROUBLE SYMPTOMS

| Trouble symptom | Inspection procedure No. | Reference page |
|---|---|---|
| The rear A/C does not operate at all. | 1 | 55B-20 |
| The rear A/C outlet air temperature can not be set. | 2 | 55B-21 |
| The rear blower does not operate. | 3 | 55B-22 |
| Rear blower air volume can not be changed. | 4 | 55B-23 |
| Air outlet vents can not be changed in proportion to the temperature adjusting switch. | 5 | 55B-23 |

## INSPECTION PROCEDURES FOR TROUBLE SYMPTOMS

### Inspection procedure 1

| The rear A/C does not operate at all. | Probable cause |
|---|---|
| The rear fan switch or front rear fan switch circuit, or the power supply system (including earth) for the rear A/C control unit may be defective. Besides that, the rear A/C control unit may not be operating correctly due to a defective harness (such as short circuit). | • Malfunction of the rear fan switch<br>• Malfunction of the front rear fan switch<br>• Malfunction of harness or connector<br>• Malfunction of the rear A/C control unit |

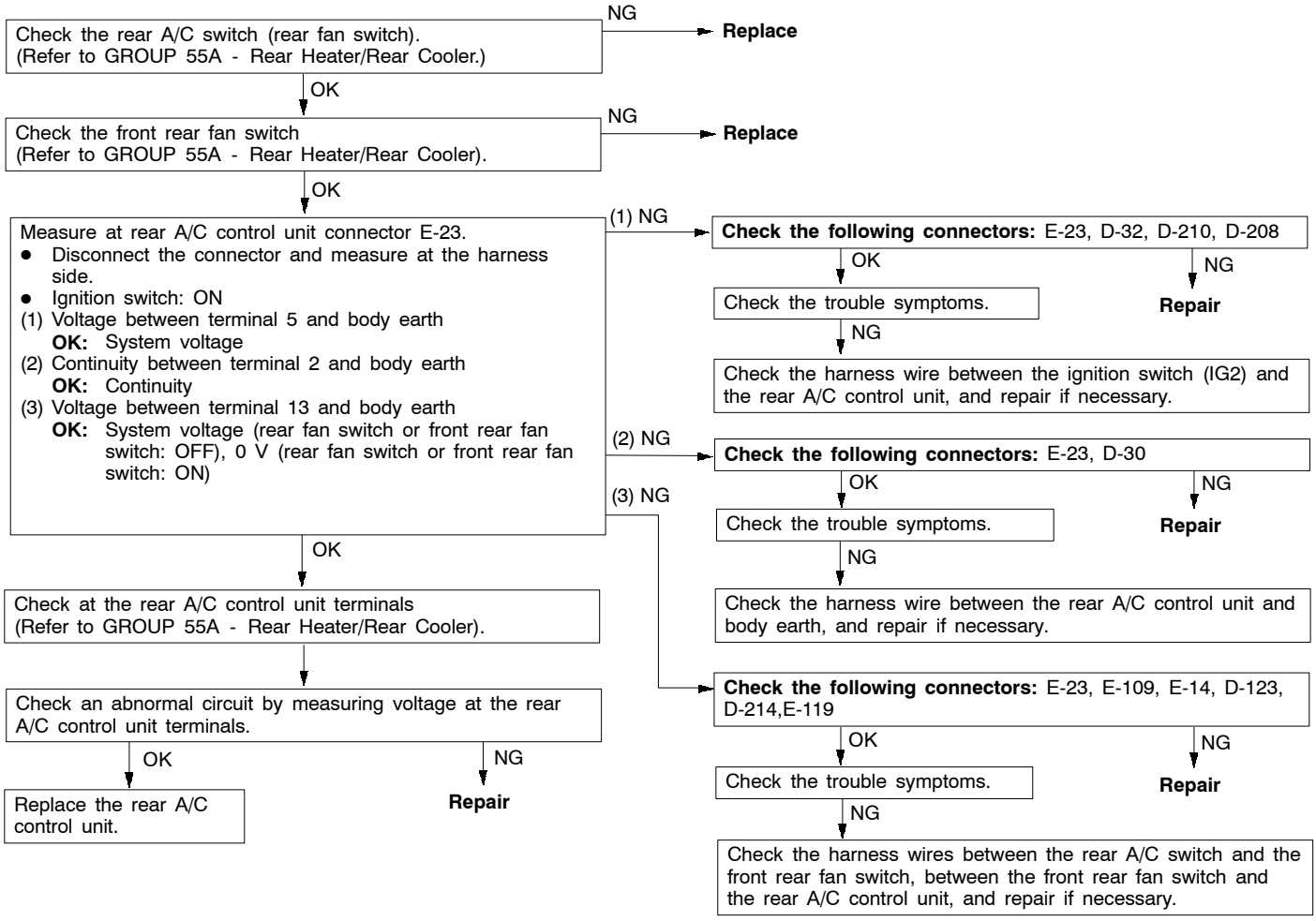


Purchased from www.WorkshopManuals.co.uk

www.WorkshopManuals.co.uk

## Inspection procedure 2

| The rear A/C outlet air temperature can not be set. | Probable cause |
|---|---|
| If the air outlet temperature can not be changed after a temperature control switch is operated,the temperature control switch, the air thermo sensor, the magnet valve or the air mix damper maybe defective. | • Malfunction of the rear A/C switch<br>• Malfunction of the air thermo sensor<br>• Magnet valve<br>• Malfunction of the electric motor for the air mix damper<br>• Malfunction of harness or connector<br>• Malfunction of the rear A/C control unit |

Check the rear A/C switch (temperature control switch).
(Refer to GROUP 55A - Rear Heater/Rear Cooler.)
- NG → **Replace**
- OK ↓

Check the air thermo sensor.
(Refer to GROUP 55A - Rear Heater/Rear Cooler.)
- NG → **Replace**
- OK ↓

Check the air mix damper motor.
(Refer to GROUP 55A - Rear Heater/Rear Cooler.)
- NG → **Replace**
- OK ↓

Check the magnetic valve.
(Refer to GROUP 55A - Rear Heater/Rear Cooler.)
- NG → **Replace**
- OK ↓

Measure at rear A/C control unit connector E-23.
- Connect the connector.
- Ignition switch: ON

(1) Voltage between terminal 3 and body earth
**OK:** 1 V (Temperature control switch: MAX HOT),
4 V (Temperature control switch: MAX COOL)

(2) Voltage between terminal 12 and body earth
**OK:** 2.2 V [Air thermo sensor temperature: 25°C (1.5 k Ω)]

(3) Voltage between terminal 7 and body earth
**OK:** 1 V (Air mix damper: MAX HOT),
4 V (Air mix damper: MAX COOL)

(4) Voltage between terminal 6 and body earth
**OK:** 10 V (When the air mix damper flap is moving to the MAX COOL position), 0.5 V (When the air mix damper flap is moving to the MAX HOT position)

(5) Voltage between terminal 14 and body earth
**OK:** 0.5 V (When the air mix damper flap is moving to the MAX COOL position), 10 V (When the air mix damper flap is moving to the MAX HOT position)

(6) Voltage between terminal 1 and body earth
**OK:** System voltage (magnetic valve: OFF), 0.5 V (magnetic valve: ON)

- (1) NG →
  - **Check the following connectors:** E-23, D-123, E-119
    - OK ↓ Check the trouble symptoms.
      - NG ↓ Check the harness wire between the rear A/C control unit and the rear A/C switch, and repair if necessary.
    - NG → **Repair**
- (2) NG →
  - **Check the following connectors:** E-23, D-123, G-26, G-24-1, G-24-3
    - OK ↓ Check the trouble symptoms.
      - NG ↓ Check the harness wire between the rear A/C control unit and the air thermo sensor, and repair if necessary.
    - NG → **Repair**
- (3 - 5) NG →
  - **Check the following connectors:** E-23, D-123, G-24, G-24-1, G-24-2
    - OK ↓ Check the trouble symptoms.
      - NG ↓ Check the harness wire between the rear A/C control unit and the air mix damper motor, and repair if necessary.
    - NG → **Repair**
- (6) NG →
  - **Check the following connectors:** E-23, D-123, G-26, G-24-1, G-24-4
    - OK ↓ Check the trouble symptoms.
      - NG ↓ Check the harness wire between the rear A/C control unit and the magnet valve, and repair if necessary.
    - NG → **Repair**

- OK ↓

Replace the rear A/C control unit.

Purchased from www.WorkshopManuals.co.uk

www.WorkshopManuals.co.uk

## Inspection procedure 3

| The rear blower does not operate. | Probable cause |
|---|---|
| If no air comes out of the air vents even if the rear fan switch or the front rear fan switch is turned on, the rear blower relay circuit may be defective. | • Malfunction of the rear blower relay<br>• Malfunction of the blower motor<br>• Malfunction of the rear A/C switch<br>• Malfunction of harness or connector |

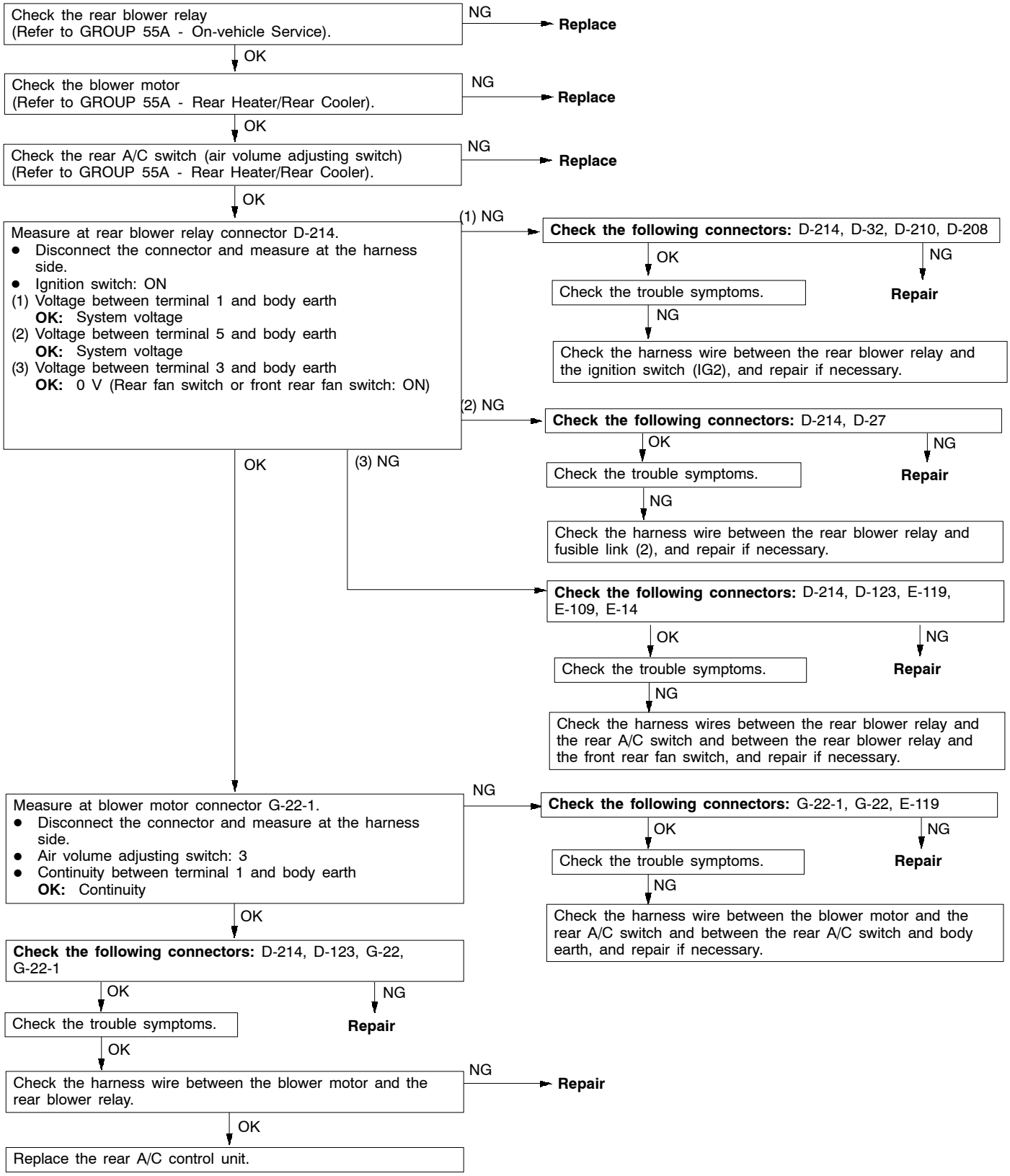


Purchased from www.WorkshopManuals.co.uk

www.WorkshopManuals.co.uk

## Inspection procedure 4

| The rear blower air volume can not be changed. | Probable cause |
|---|---|
| If the air volume can not be controlled, the air volume adjusting switch or the resistor may be defective. | • Malfunction of the rear A/C switch<br>• Malfunction of the resistor<br>• Malfunction of harness or connector |

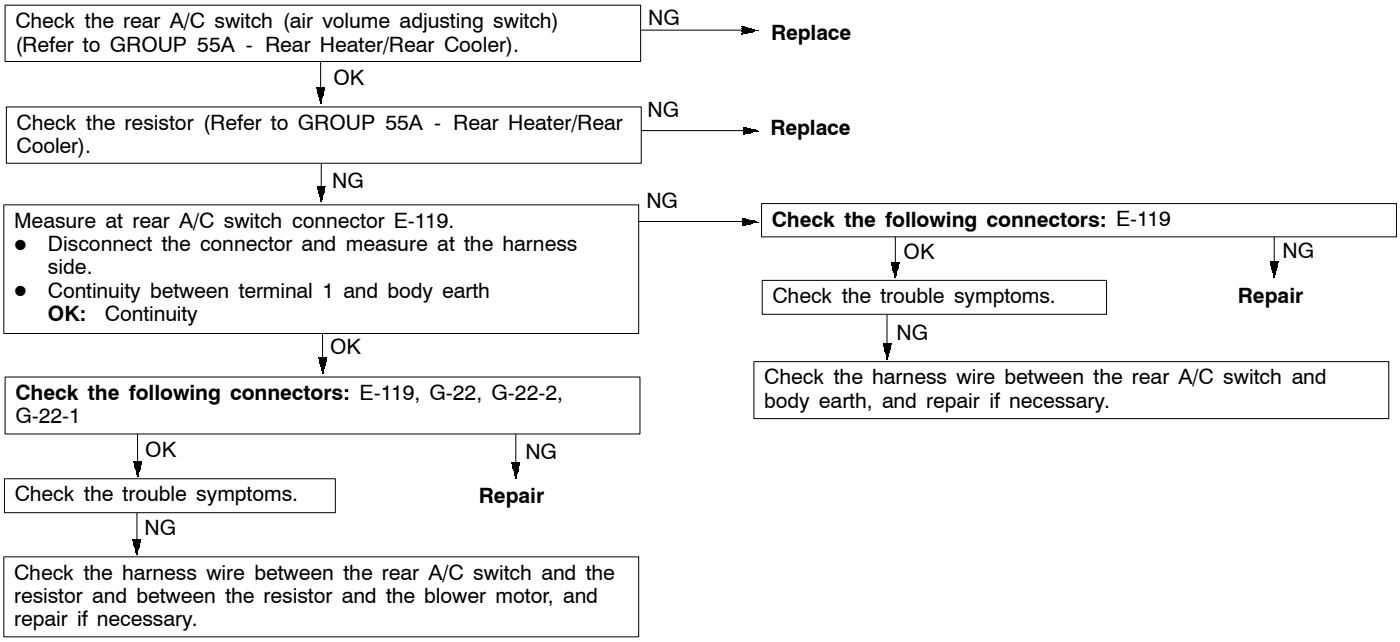


## Inspection procedure 5

| Air outlet vents can not be changed in proportion to the temperature adjusting switch. | Probable cause |
|---|---|
| If the air outlet temperature can not be changed after a temperature control switch is operated, the air outlet changeover damper may be defective. | • Malfunction of the electric motor for the air outlet changeover damper<br>• Malfunction of harness or connector<br>• Malfunction of the rear A/C control unit |

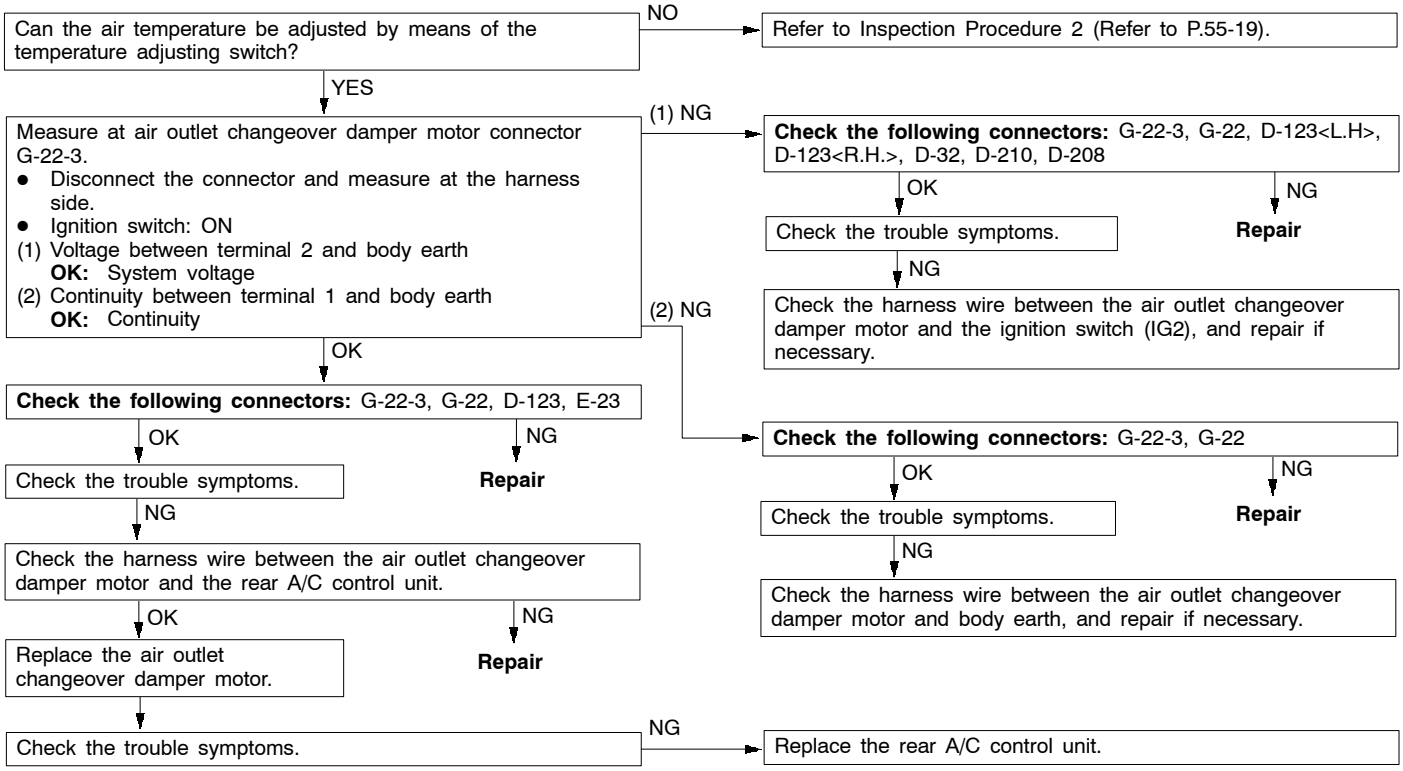


Purchased from www.WorkshopManuals.co.uk

www.WorkshopManuals.co.uk

## CHECK AT REAR A/C CONTROL UNIT TERMINALS

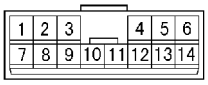

X1136CA

| Terminal No. | Check item | Check conditions | Normal condition |
|---|---|---|---|
| 1 | Magnet valve | Magnet valve: OFF | System voltage |
| | | Magnet valve: ON | Faint voltage (0.5 V) |
| 2 | Earth | At all times | Continuity |
| 3 | Input from temperature adjusting switch | Temperature adjusting switch: MAX HOT | 1 V |
| | | Temperature adjusting switch: MAX COOL | 4 V |
| 4 | Power supply to potentiometer | At all times | 5 V |
| 5 | Power supply to ignition switch (IG2) | Ignition switch: ON | System voltage |
| 6 | Electric motor for the air mix damper (MAX COOL) | When the damper flap is moving to the MAX COOL position. | 10 V |
| | | When the damper flap is moving to the MAX HOT position. | Faint voltage (0.5 V) |
| 7 | Input from potentiometer for air mix damper | Air mix damper: MAX HOT | 1 V |
| | | Air mix damper: MAX COOL | 4 V |
| 8 | Earth to sensor and potentiometer | At all times | 0 V |
| 9 | Signal from air outlet changeover damper motor | Ignition switch: ON | 0 - 12 V |
| 10 | Signal from air outlet changeover damper motor | Ignition switch: ON | 0 - 12 V |
| 11 | Signal from air outlet changeover damper motor | Ignition switch: ON | 0 - 12 V |
| 12 | Input from air thermo sensor | Sensor temperature: 25°C (1.5 kΩ) | 2.2 V |
| 13 | Input from rear fan switch and front rear fan switch | Rear fan switch or front rear fan switch: ON | 0 V |
| 14 | Electric motor for the air mix damper (MAX HOT) | When the damper flap is moving to the MAX COOL position. | Faint voltage (0.5 V) |
| | | When the damper flap is moving to the MAX HOT position. | 10 V |

# ON-VEHICLE SERVICE

## MAGNETIC CLUTCH TEST

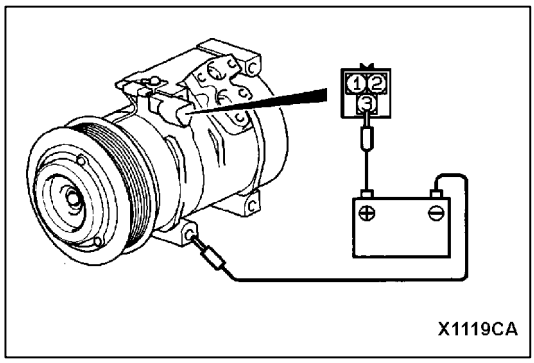

X1119CA

1. Disconnect the connector (3-pin) to the magnetic clutch.
2. Connect battery (+) voltage directly to the connector for the magnetic clutch.
3. If the magnetic clutch is normal, there will be “click”. If the pulley and armature do not make contact (‘click’), there is a malfunction.

Purchased from www.WorkshopManuals.co.uk

www.WorkshopManuals.co.uk

### IDLE UP OPERATION CHECK <Petrol>

1. Set the vehicle in the following condition:
2. Check that the idle speed is within the standard value.

   **Standard value: 700 ± 50 r/min**

   NOTE
   (1) The idle speed is controlled by the ISC system and should not be adjusted.
   (2) Run the engine at idle, and wait for at least two minutes before the check.

3. The idle speed should be within the standard value when the A/C switch is turned on and the A/C is operating.

   **Standard value:**
   **<While the A/C is under low load>**
   **700 ± 50 r/min**
   **<While the A/C is under medium load>**
   **800 ± 50 r/min**
   **<While the A/C is under high load>**
   **1,000 ± 50 r/min**

# FRONT A/C

## AUTOMATIC A/C CONTROL PANEL ASSEMBLY (A/C-ECU) REMOVAL AND INSTALLATION

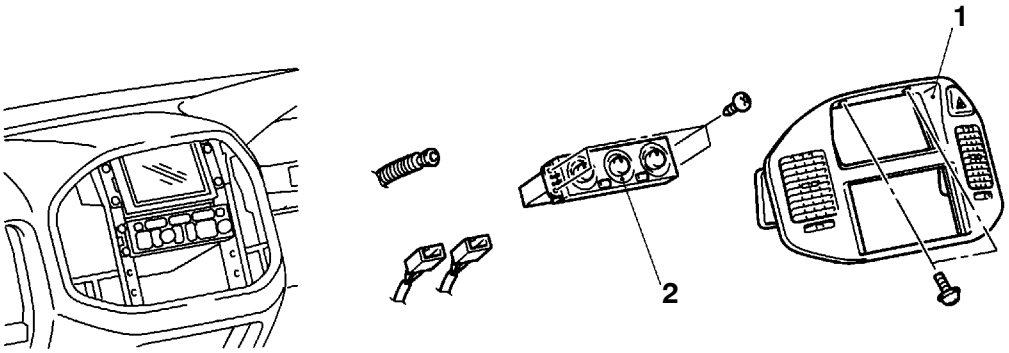


AX1027CA

**Removal steps**

1. Center panel (Refer to GROUP 52A - Instrument Panel.)
2. Automatic A/C control panel assembly (A/C-ECU)

Purchased from www.WorkshopManuals.co.uk

www.WorkshopManuals.co.uk

## BLOWER LINEAR CONTROLLER
## REMOVAL AND INSTALLATION

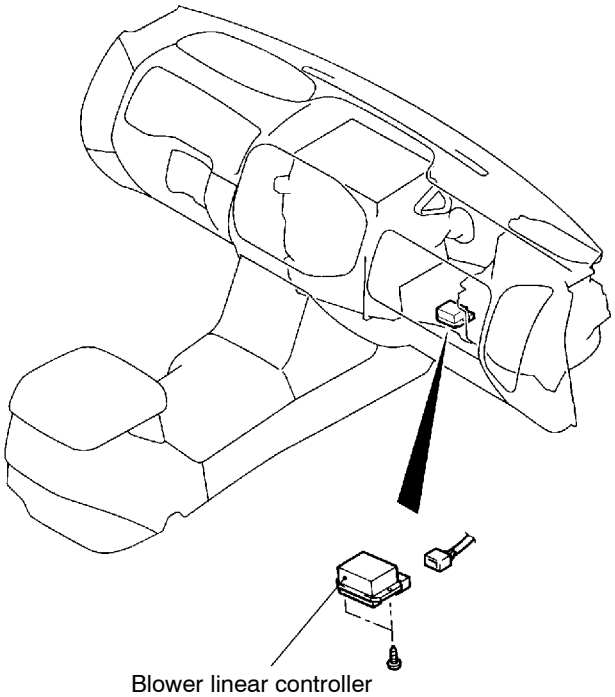


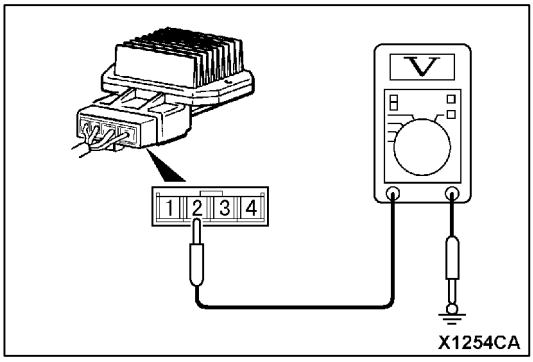


## INSPECTION

### BLOWER LINEAR CONTROLLER INSPECTION

When the connector is connected and the ignition switch is turned ON, the voltage at terminal 2 should meet the following table.

| Blower switch position | Voltage at terminal No.2 V |
|---|---|
| Low speed | 4.0 |
| Medium speed | 7.9 |
| High speed | 13.7 |

Purchased from www.WorkshopManuals.co.uk

www.WorkshopManuals.co.uk

## AIR MIX DAMPER MOTOR AND AIR OUTLET CHANGEOVER DAMPER MOTOR REMOVAL AND INSTALLATION

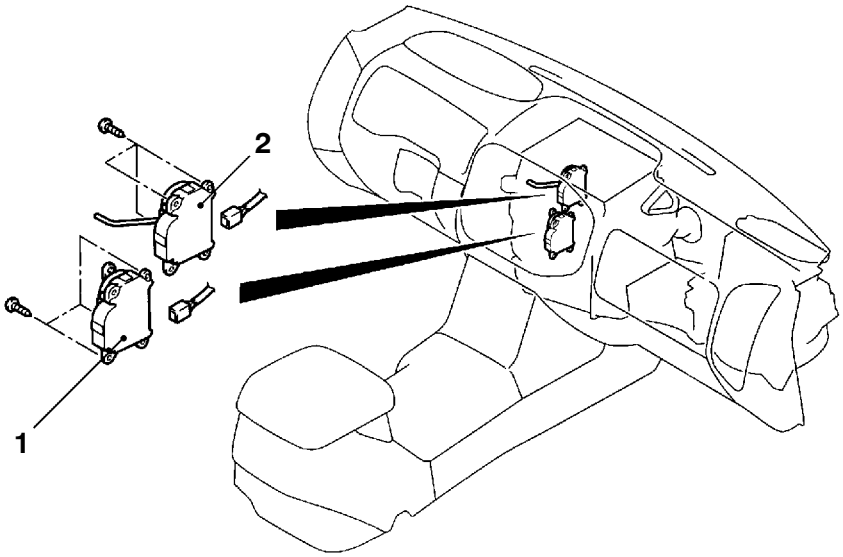


**Removal steps**
- Under cover (Refer to GROUP 52A – Instrument Panel.)

1. Electric motor for the air mix damper
2. Electric motor for the air outlet changeover damper

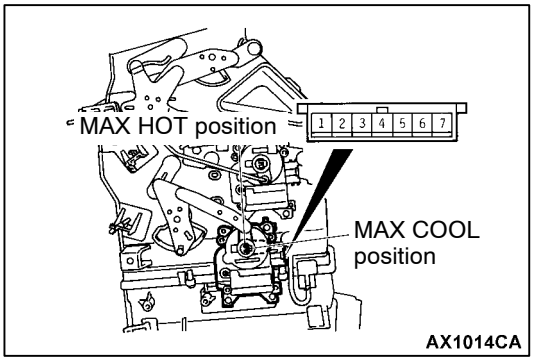


## INSPECTION

### AIR MIX DAMPER MOTOR INSPECTION

**Motor check**

| Battery connection terminal | | Lever operation |
|---|---|---|
| 1 | 2 | |
| ⊕ | ⊖ | Rotate to the HOT position. |
| ⊖ | ⊕ | Rotate to the COOL position. |

**Caution**
**If the lever reaches the stop position, disconnect the battery voltage.**

Purchased from www.WorkshopManuals.co.uk

www.WorkshopManuals.co.uk

**Potentiometer check**

When the resistances between terminals 3 and 5 as well as terminals 3 and 7 are measured at the previous check, the resistance value should change gradually within the standard value.

**Standard value: Approximately 0.96 - 5.76 kΩ**

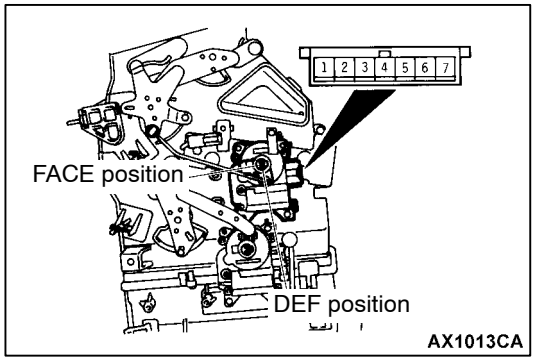


## AIR OUTLET CHANGEOVER DAMPER MOTOR CHECK

**Motor check**

| Battery connection terminal | | Lever operation |
|---|---|---|
| 1 | 2 | |
| ⊕ | ⊖ | Rotate to the DEF position. |
| ⊖ | ⊕ | Rotate to the FACE position. |

**Caution**
**If the lever reaches the stop position, disconnect the battery voltage.**

**Potentiometer check**

When the resistances between terminals 3 and 5 as well as terminals 3 and 7 are measured at the previous check, the resistance value should change gradually within the standard value.

**Standard value: Approximately 0.96 - 5.76 kΩ**

Purchased from www.WorkshopManuals.co.uk

www.WorkshopManuals.co.uk

## HEATER WATER TEMPERATURE SENSOR REMOVAL AND INSTALLATION

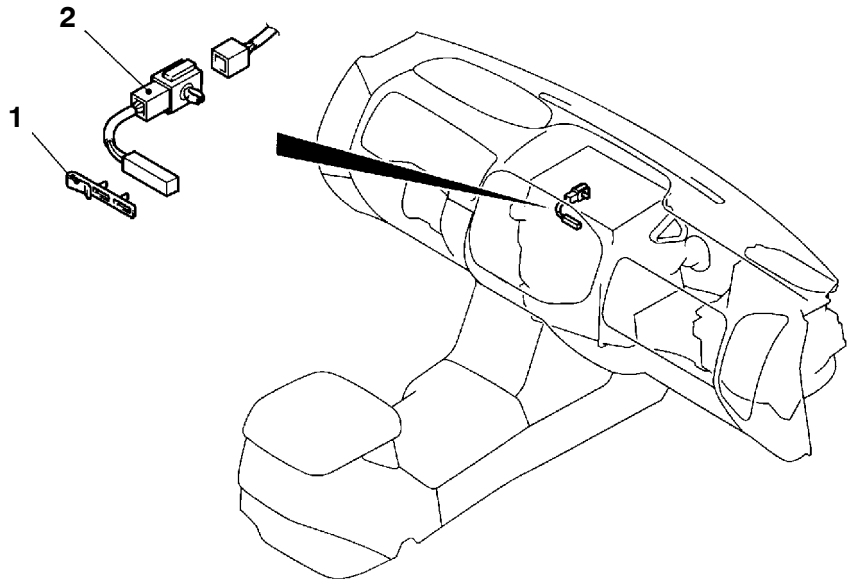


**Removal steps**

- Under cover (Refer to GROUP 52A – Instrument Panel.)

▶A◀ 1. Heater water temperature sensor clip
▶A◀ 2. Heater water temperature sensor

## INSTALLATION SERVICE POINTS

### ▶A◀ HEATER WATER TEMPERATURE SENSOR CLIP INSTALLATION

Insert the heater water temperature sensor into the mounting hole on the heater unit, and secure the sensor with the clip.

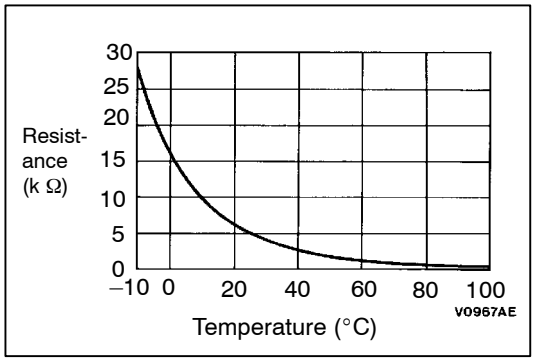


## INSPECTION

### HEATER WATER TEMPERATURE SENSOR CHECK

Measure the resistance between the sensor terminals under at least two temperatures. The resistance values should meet the left graph.

NOTE
The temperature should be within the shown range.

Purchased from www.WorkshopManuals.co.uk

www.WorkshopManuals.co.uk

# PHOTO SENSOR

## REMOVAL AND INSTALLATION

(Refer to GROUP 54A – Headlamp.)

## INSPECTION

### PHOTO SENSOR CHECK

The blower speed should drop when the light-receiving section of the photo sensor is covered with your hand. If not, replace the photo sensor.

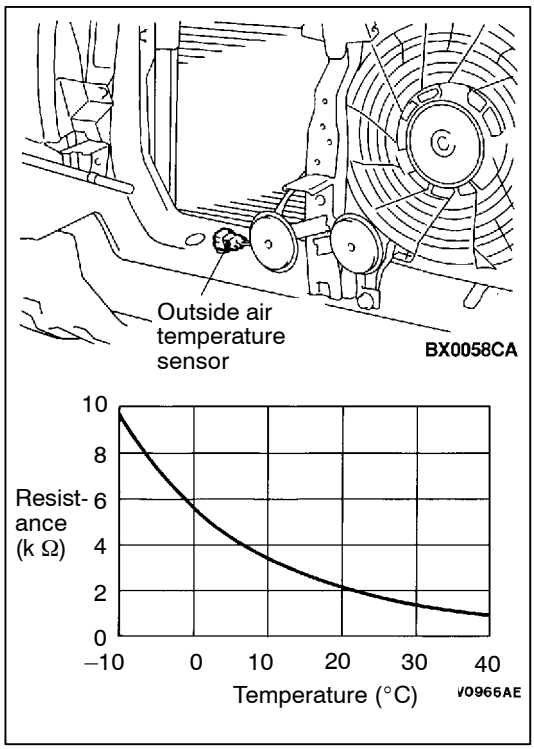


# OUTSIDE AIR TEMPERATURE SENSOR

## INSPECTION

### OUTSIDE AIR TEMPERATURE SENSOR CHECK

Measure the resistance between the sensor terminals under at least two temperatures. The resistance values should meet the left graph.

NOTE
The temperature should be within the shown range.

# REAR A/C

## ELECTRIC MOTOR FOR THE AIR OUTLET CHANGEOVER DAMPER

## REMOVAL AND INSTALLATION

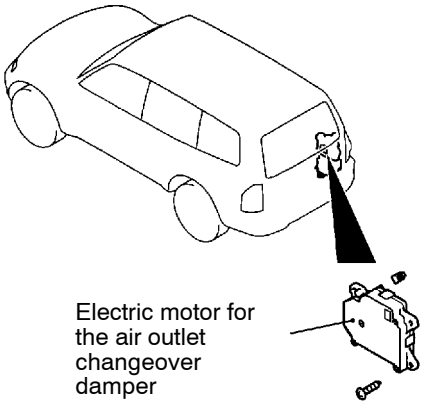


Purchased from www.WorkshopManuals.co.uk

www.WorkshopManuals.co.uk

# REFRIGERANT LINE <PETROL>

## REMOVAL AND INSTALLATION <L.H. drive vehicles>

### Dual A/C

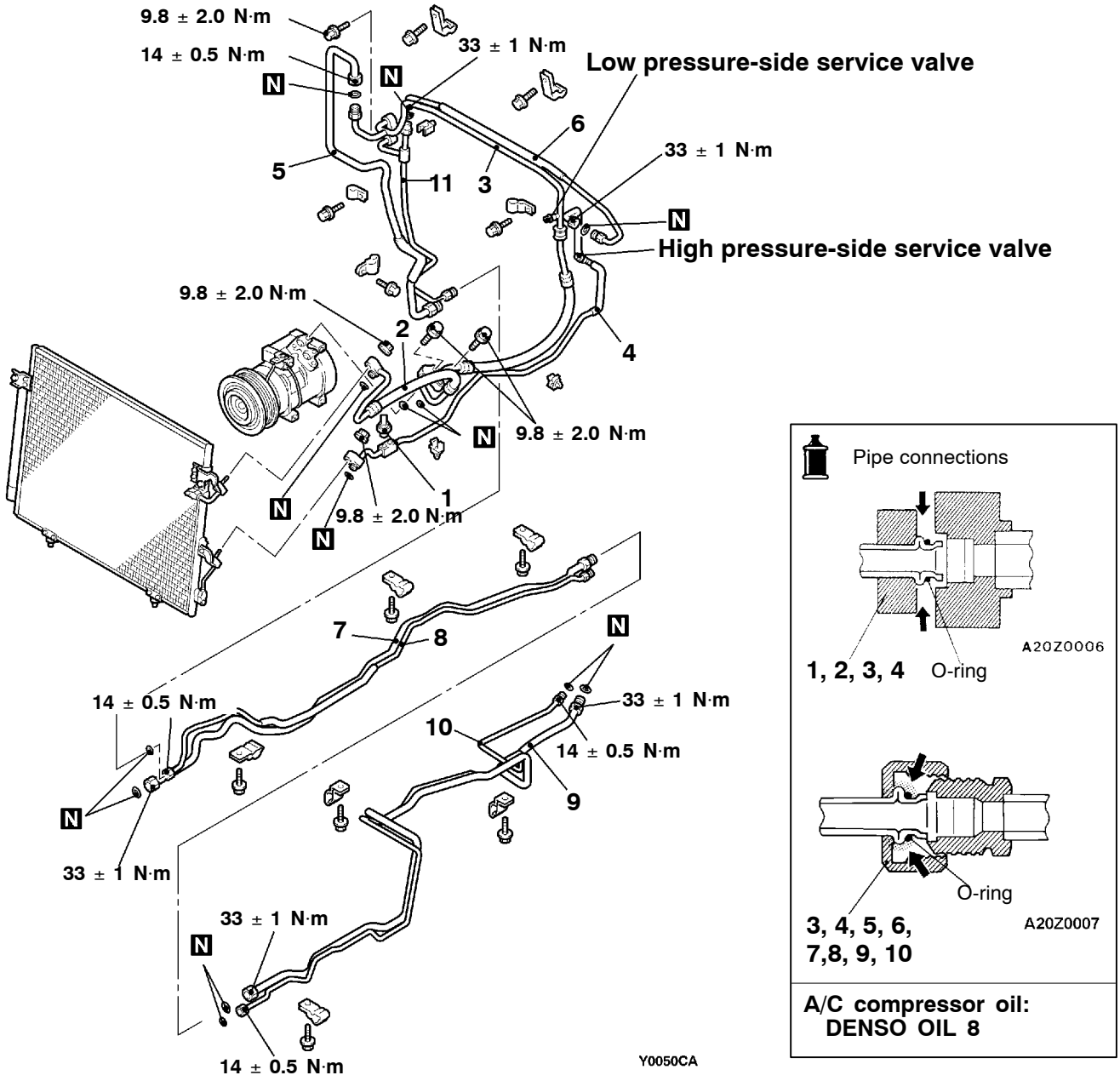


**Removal steps**

1. Dual pressure switch
◀A▶ 2. Discharge flexible hose
◀A▶ 3. Suction flexible hose
◀A▶ 4. Liquid pipe A
◀A▶ 5. Suction pipe A
◀A▶ 6. Liquid pipe B
◀A▶ 7. Suction pipe B
◀A▶ 8. Liquid pipe C
◀A▶ 9. Suction pipe C
◀A▶ 10. Liquid pipe D
◀A▶ 11. Liquid pipe E

Purchased from www.WorkshopManuals.co.uk

www.WorkshopManuals.co.uk

## <R.H. drive vehicles>

### Dual A/C

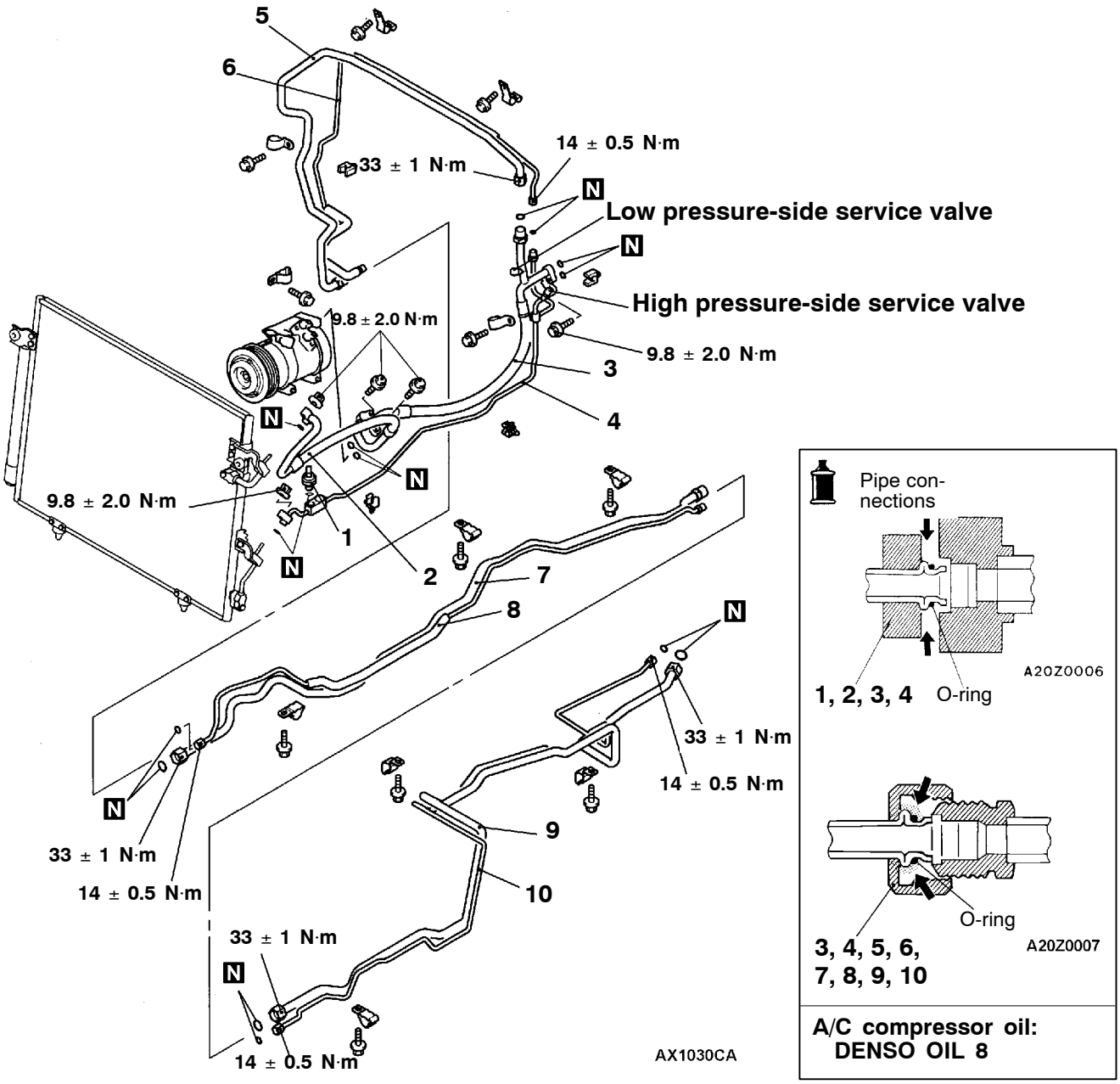


**Removal steps**

1. Dual pressure switch
◀A▶ 2. Discharge flexible hose
◀A▶ 3. Suction flexible hose
◀A▶ 4. Liquid pipe A
◀A▶ 5. Suction pipe A
◀A▶ 6. Liquid pipe B
◀A▶ 7. Suction pipe B
◀A▶ 8. Liquid pipe C
◀A▶ 9. Suction pipe C
◀A▶ 10. Liquid pipe D

Purchased from www.WorkshopManuals.co.uk

www.WorkshopManuals.co.uk

## REMOVAL SERVICE POINT

### ◀A▶ HOSE/PIPE DISCONNECTION

Plug the condenser, the compressor and the heater unit nipples to prevent system contamination.

**Caution**
**Use a plug, which air does not penetrate through. Compressor oil and receiver absorb moisture easily.**

# COMPRESSOR <petrol>

## REMOVAL AND INSTALLATION

**Pre-removal Operations**
Refrigerant discharge
(Refer to GROUP-55A - On-vehicle Service.)

**Post-installation Operations**
- Refrigerant charge
  (Refer to GROUP-55A - On-vehicle Service.)
- Drive belt tension check
  (Refer to GROUP 11A, B - On-vehicle Service.)

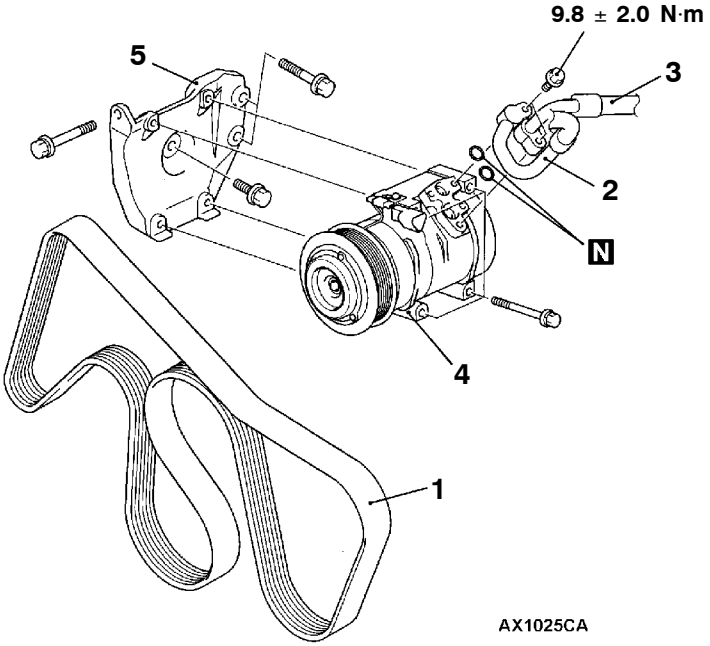


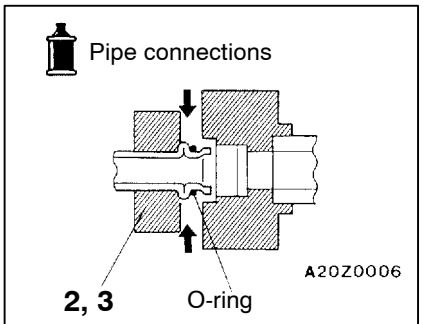


**A/C compressor oil:**
**DENSO OIL 8**

**Removal steps**

◀A▶ 1. Drive belt
◀B▶ 2. Discharge flexible hose connection
◀B▶ 3. Suction flexible hose connection
◀C▶ ▶A◀ 4. Compressor
5. Compressor bracket

Purchased from www.WorkshopManuals.co.uk

www.WorkshopManuals.co.uk

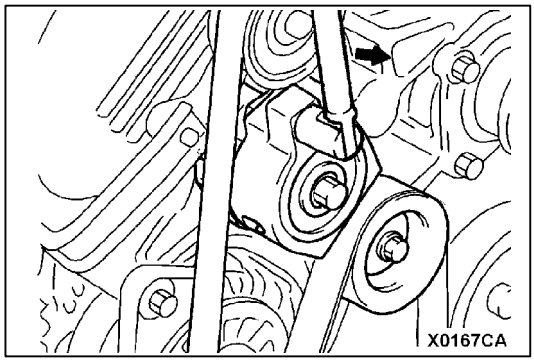


## REMOVAL SERVICE POINTS

### ◀A▶ DRIVE BELT REMOVAL

Engage a socket wrench with the service square hole on the automatic tensioner, move the wrench to the shown direction to loosen the drive belt.

**Caution**
**If the drive belt is reused, mark an arrow indicating rotation direction (clockwise direction) on the belt surface with a chalk.**

### ◀B▶ DISCHARGE FLEXIBLE HOSE/SUCTION FLEXIBLE HOSE DISCONNECTION

Plug the disconnect hoses and the compressor nipples to prevent dust or foreign material from entering them.

**Caution**
**Use a plug, which air does not penetrate through. Compressor oil and receiver absorb moisture easily.**

### ◀C▶ COMPRESSOR REMOVAL

Be careful not to spill the compressor oil.

## INSTALLATION SERVICE POINT

### ▶A◀ COMPRESSOR INSTALLATION

If a new compressor is installed, first adjust the amount of oil according to the procedures described below, and then install the compressor.

1. Measure the amount of oil within the removed compressor. (X ml)
2. Drain (from the new compressor) the amount of oil calculated according to the following formula, and then install the new compressor.

   **Single A/C <except vehicles with rear cooler>:**
   **120 ml − X ml = Y ml**

   **Single A/C <Vehicles with rear cooler>, dual A/C:**
   **140 ml – X ml = Y ml**

   NOTE
   (1) The above amounts (120 ml and 140 ml) indicate the factory-charged amount inside a new compressor.
   (2) Y ml indicates the amount of oil in the refrigerant line, the condenser, the evaporator, etc.

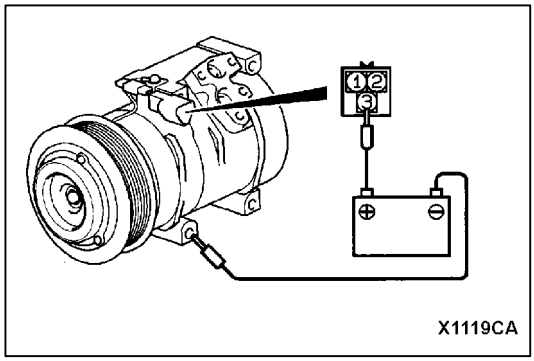


## INSPECTION

### COMPRESSOR MAGNETIC CLUTCH OPERATION INSPECTION

Connect the positive battery cable to compressor connector terminal No.3 or No.1 and negative battery cable to the compressor housing (earth).The magnetic clutch should click.

Purchased from www.WorkshopManuals.co.uk

www.WorkshopManuals.co.uk

## DISASSEMBLY AND REASSEMBLY

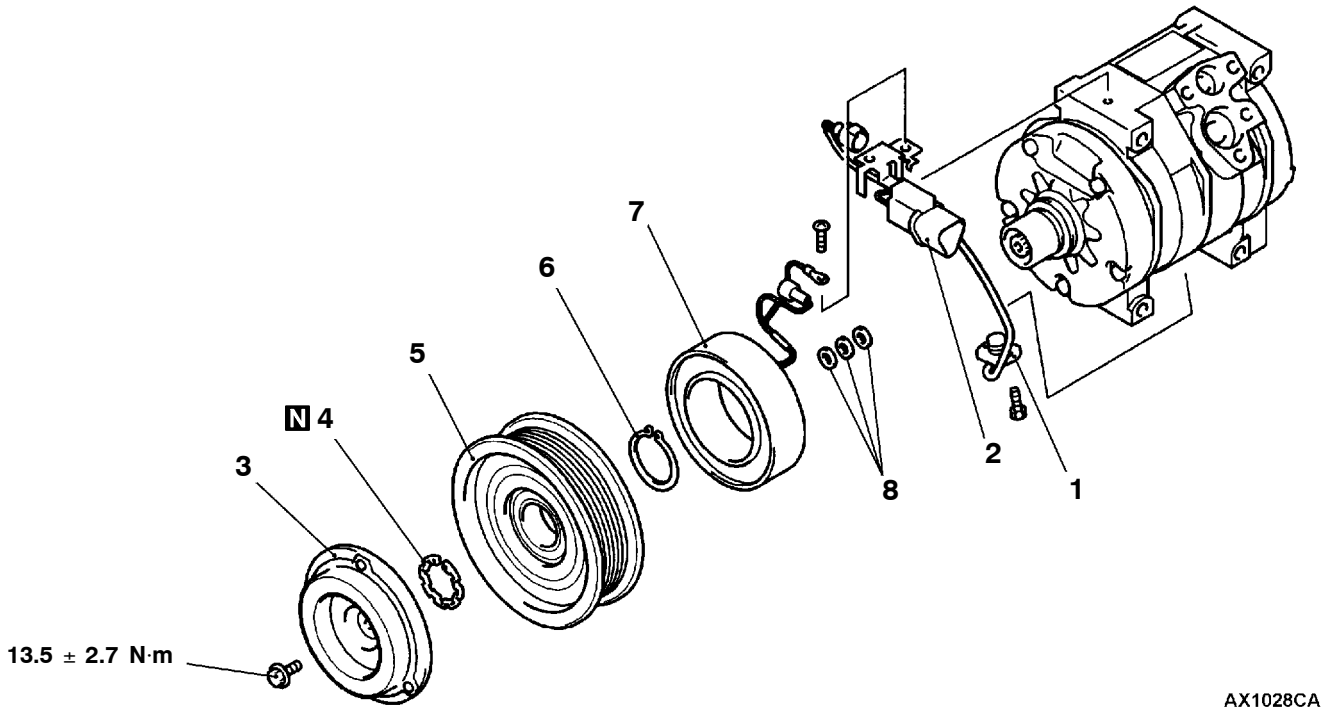


**Disassembly steps**

▶C◀ ● Air gap adjustment
1. Lock sensor
2. Connector
◀A▶ 3. Armature
▶B◀ 4. Snap ring
5. Rotor
6. Snap ring
▶A◀ 7. Field core
8. Washer

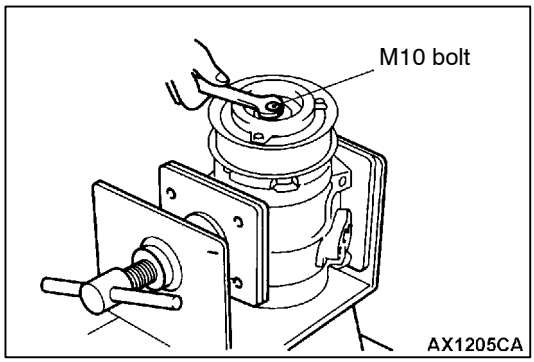


## DISASSEMBLY SERVICE POINT

### ◀A▶ ARMATURE REMOVAL

1. Remove the armature mounting bolt.
2. Tighten the M10 bolt in the armature bolt hole to disengage the shaft from the armature serration.

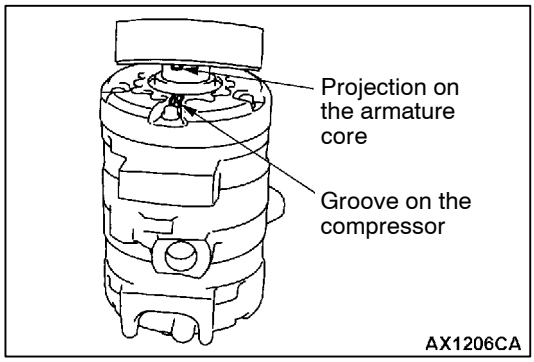


## REASSEMBLY SERVICE POINTS

### ▶A◀ FIELD CORE INSTALLATION

Align the compressor groove with the field core projection to install the field core.

Purchased from www.WorkshopManuals.co.uk

www.WorkshopManuals.co.uk

### ▶B◀ SNAP RING INSTALLATION

Be careful not to expand the snap ring excessively. If the inside diameter of the snap ring exceeds 30.5 mm due to excessive expansion, replace it.

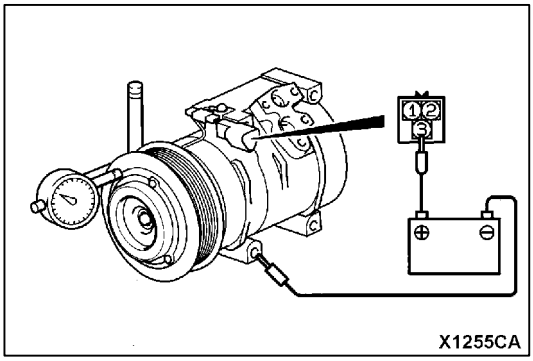


### ▶C◀ AIR GAP ADJUSTMENT

Apply battery voltage to the magnetic clutch, and check that the clutch air gap is within the standard value. If not within the standard value, adjust it by using washers.

**Standard value: 0.35 - 0.65 mm**

NOTE
The washers are available in three thicknesses (0.1 mm, 0.3 mm, 0.5 mm).

Purchased from www.WorkshopManuals.co.uk