2013 Engine

Engine Mechanical - 3.6L (LFX) - Repair Instructions - On Vehicle - Camaro

REPAIR INSTRUCTIONS - ON VEHICLE

DRIVE BELT REPLACEMENT

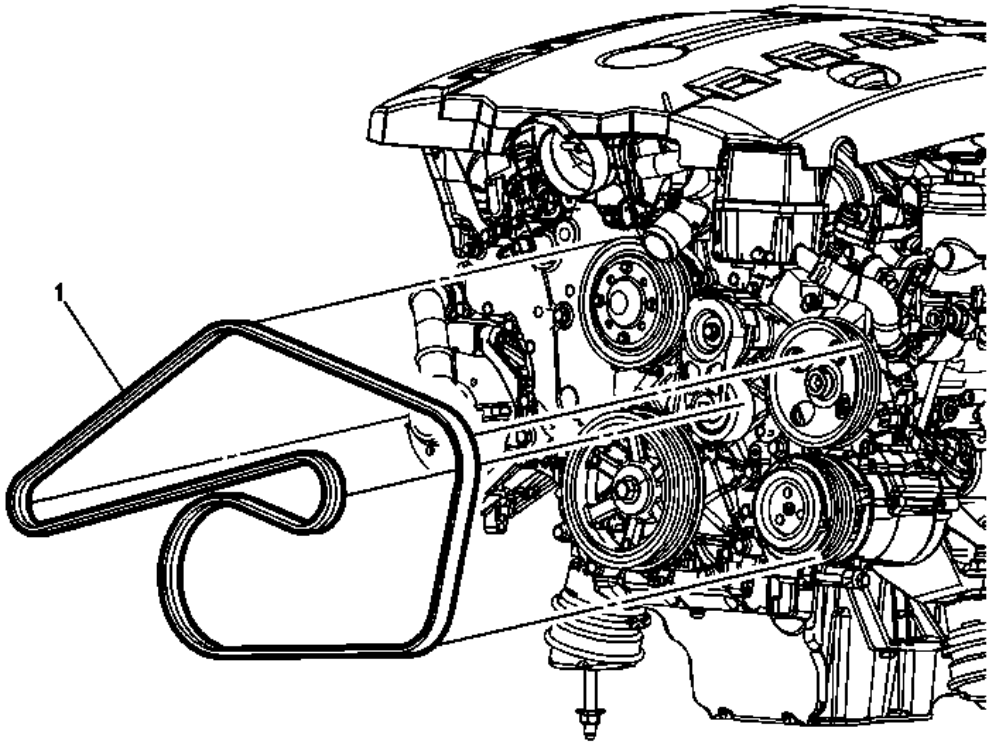

Fig. 1: Drive Belt Routing
Courtesy of GENERAL MOTORS COMPANY

Drive Belt Replacement

Callout	Component Name
Preliminary Procedure Remove the air cleaner outlet duct , if necessary. Refer to **Air Cleaner Outlet Duct Replacement** .	
1	Drive Belt **Procedure** 1. Use a breaker bar to rotate the drive belt tensioner. 2. Remove the drive belt from the pulleys and tensioner 3. Clean and inspect the drive belt surfaces of all the pulleys. 4. Inspect the drive belt for correct alignment.

DRIVE BELT TENSIONER REPLACEMENT

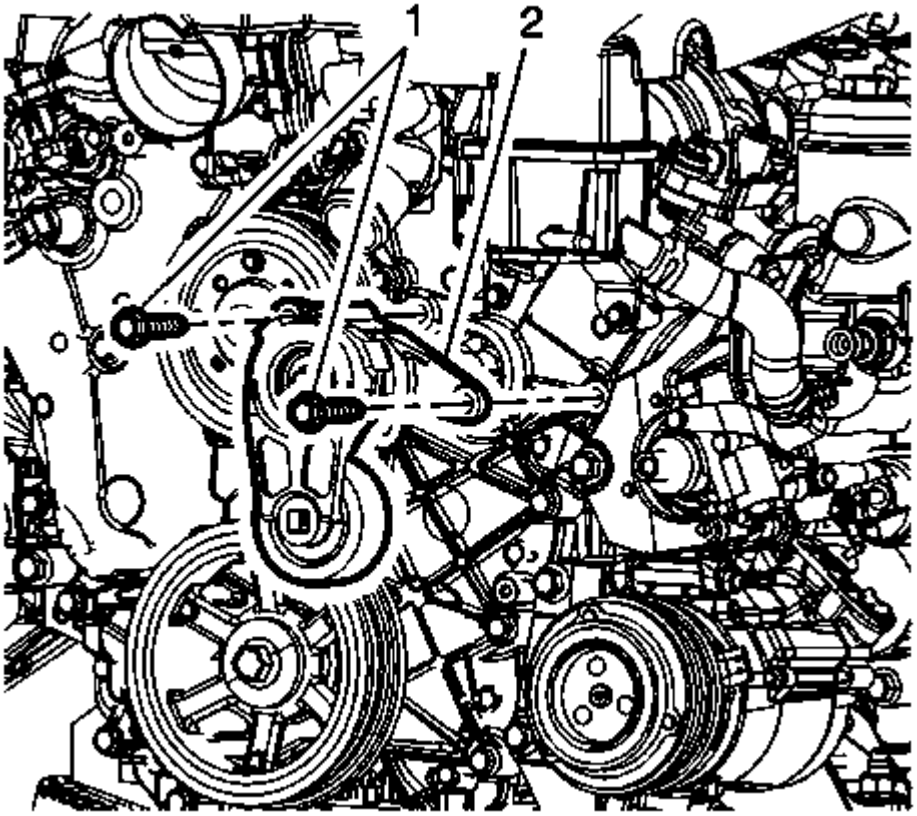

Fig. 2: Drive Belt Tensioner & Fastener
Courtesy of GENERAL MOTORS COMPANY

Drive Belt Tensioner Replacement

Callout	Component Name
Preliminary Procedure 1. Remove the drive belt. Refer to **Drive Belt Replacement**. 2. Remove the power steering pump pulley. Refer to **Power Steering Pump Pulley Replacement** ..	
1	Drive Belt Tensioner Fasteners **CAUTION:** **Refer to Fastener Caution .** **Tighten** 25 N.m (18 lb ft)
2	Drive Belt Tensioner

ENGINE SUPPORT FIXTURE (V6)

Special Tools

J 28467-81 Engine Support Fixture Kit

Installation Procedure

1. Remove the engine cover. Refer to **Intake Manifold Cover Replacement - Rear**.

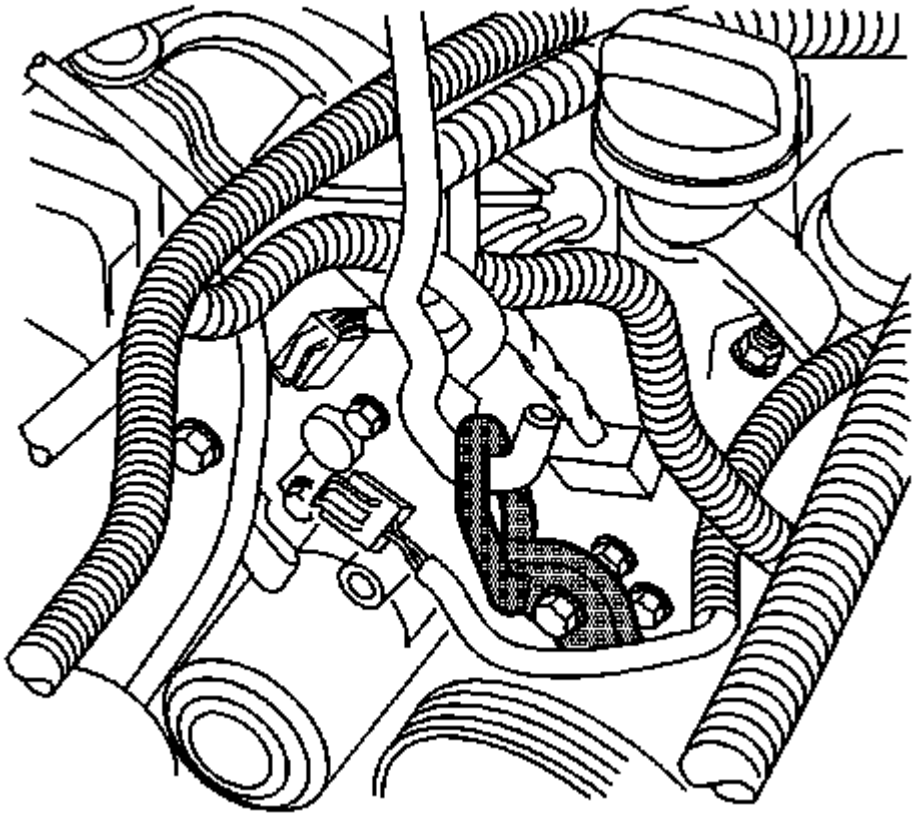

Fig. 3: Identifying Lift Hook Assembly To Left Side Engine Lift Hook Bracket
Courtesy of GENERAL MOTORS COMPANY

2. Use a grade 10.9, M10 X 1.5 X 35 bolt, GM P/N 11519182 or equivalent, in order to install an engine lift bracket (OTC #7100, J 36857 or equivalent) to the front of the left cylinder head in the location shown.
3. Support the hood and remove the hood support strut.

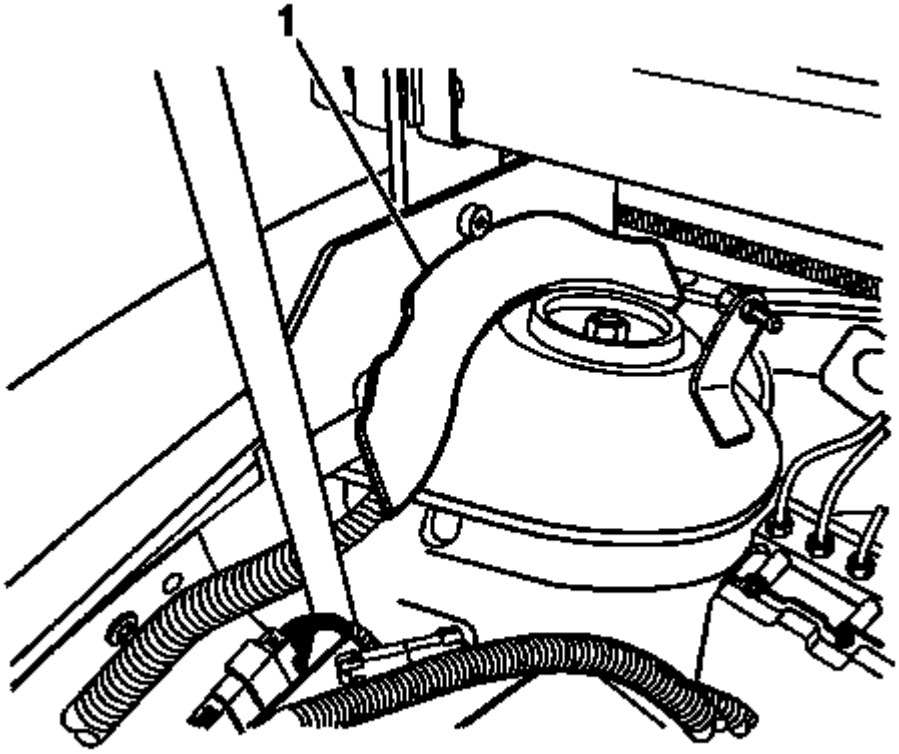

Fig. 4: Passenger Side Wire Harness
Courtesy of GENERAL MOTORS COMPANY

4. Reposition the passenger side wire harness (1) to provide clearance for support fixture leg.

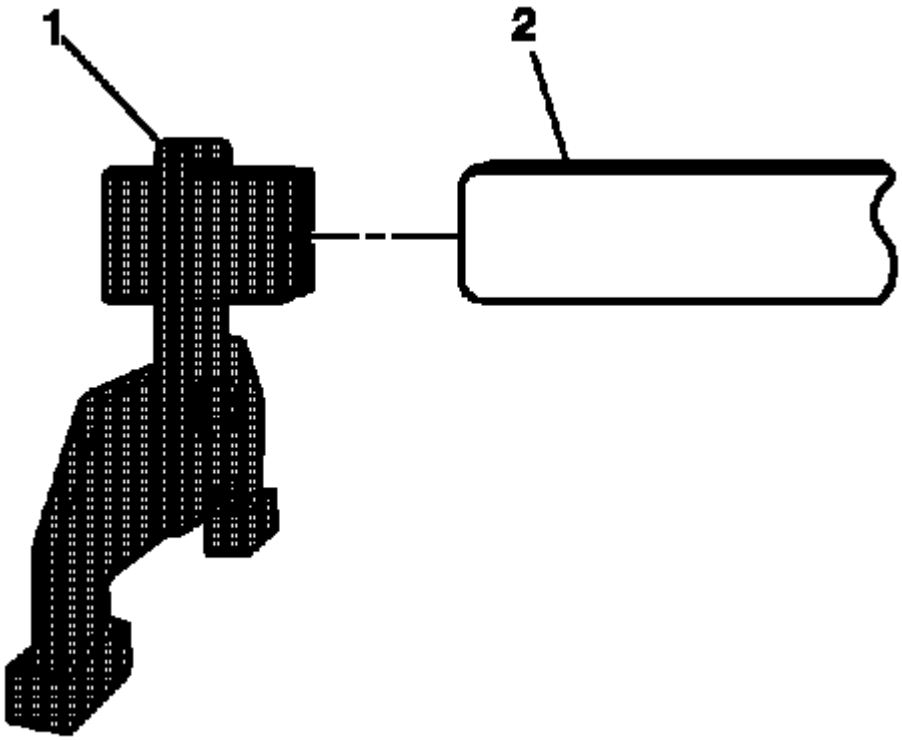

Fig. 5: Identifying Support Leg & Main Bar
Courtesy of GENERAL MOTORS COMPANY

5. Assemble a **J 28467-501** support leg (1) to each end of the **J 28467-518** main bar (2).

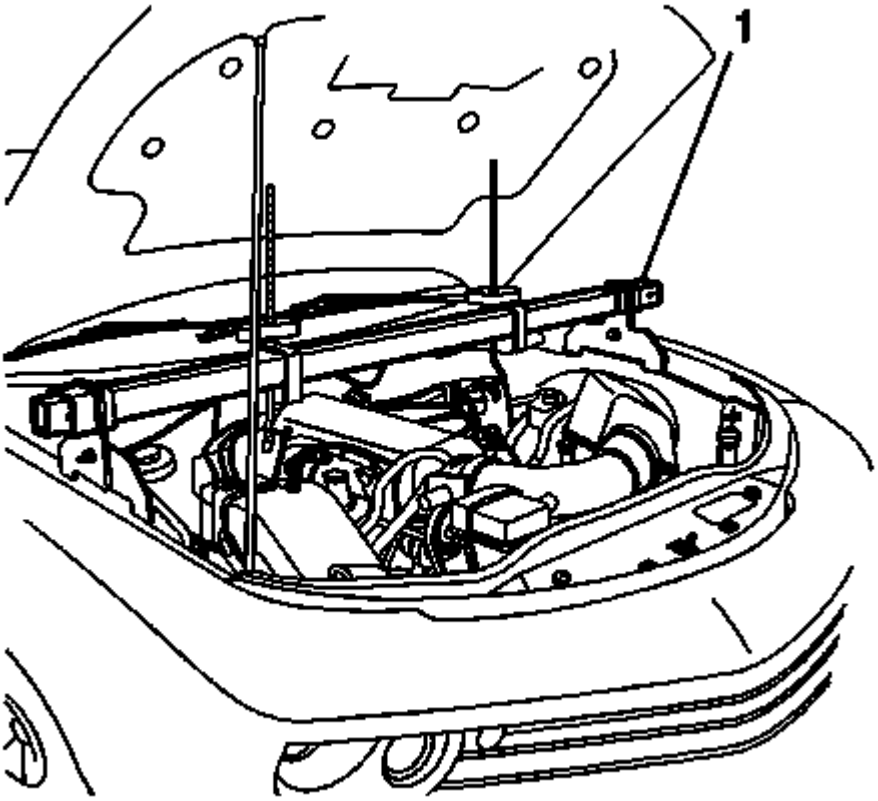

Fig. 6: Main Bar
Courtesy of GENERAL MOTORS COMPANY

6. Position the main bar (1) with the support legs over each shock tower. Ensure the rear support legs are located over the reinforced section of the shock tower.

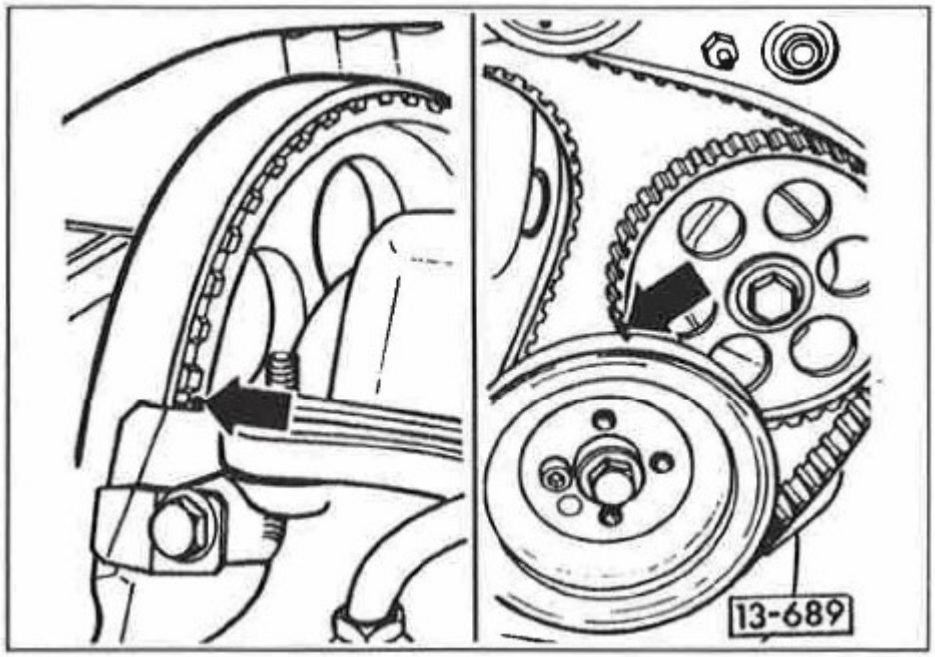

Fig. 7: View Of Lift Hook Assembly
Courtesy of GENERAL MOTORS COMPANY

7. Install the **J 28467-7A** lift hook through the **J 28467-6A** lift hook bracket.
8. Install the 1/2 inch lift hook washer and the **J 28467-34** handle onto the **J 28467-7A** lift hook.

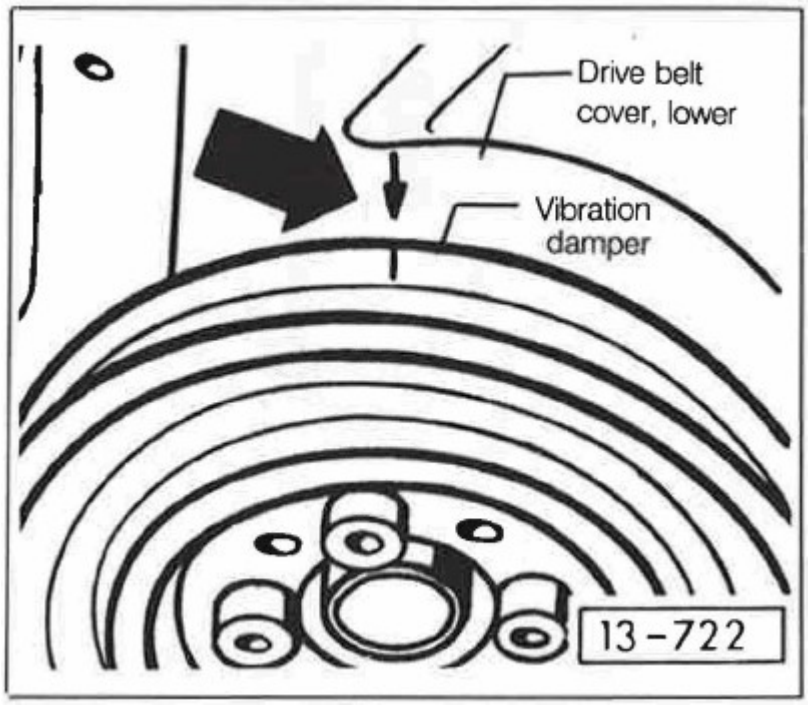

Fig. 8: View Of Lift Hook & radiator shelf tube Assembly
Courtesy of GENERAL MOTORS COMPANY

9. Install the **J 28467-6A** assembled lift hook bracket (1) over the **J 28467-16** main bar (2).
10. Adjust the **J 28467-6A** assembled lift hook bracket (1) in order to align the hook with the **J 41798** engine bracket.
11. Repeat steps 8-11 for the right lift hook.
12. Hand-tighten the lift hook wing nuts securely to remove all slack from the engine support fixture assembly.
13. The engine is now supported in the vehicle to perform repairs that require front frame removal.

Removal Procedure

1. Loosen and remove the **J 28467-81** kit.

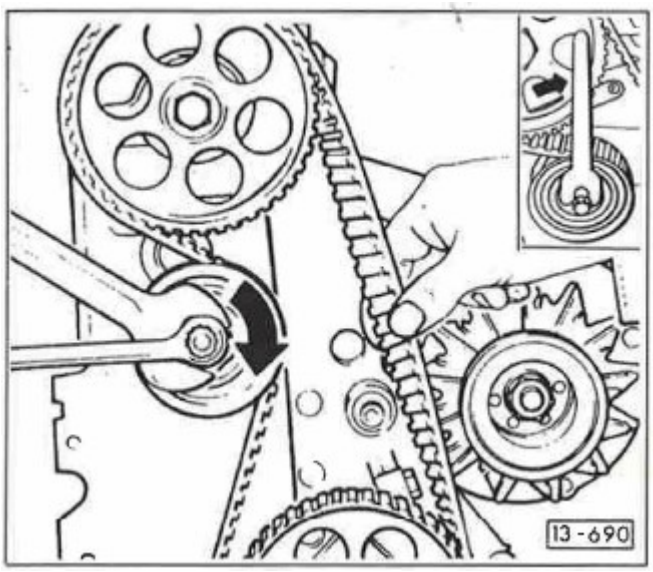

Fig. 9: Main Bar
Courtesy of GENERAL MOTORS COMPANY

2. Remove the **J 28467-81** kit (1).

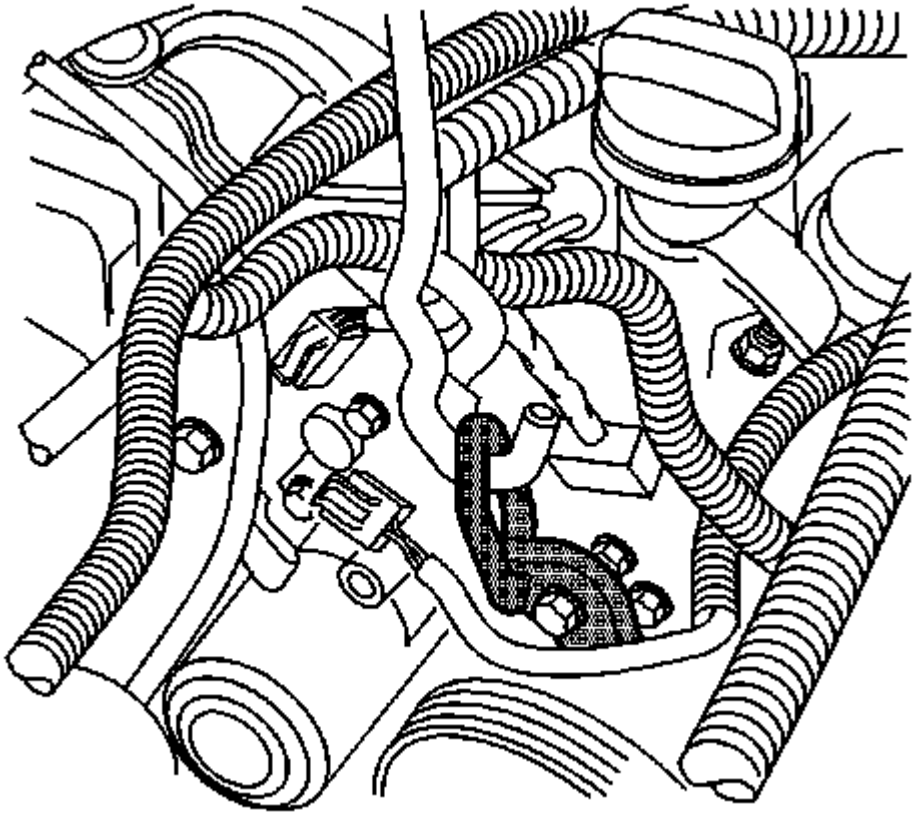

Fig. 10: Identifying Lift Hook Assembly To Left Side Engine Lift Hook Bracket
Courtesy of GENERAL MOTORS COMPANY

3. Remove the engine brackets from the cylinder heads.
4. Install the hood support strut.
5. Install the engine cover. Refer to **Intake Manifold Cover Replacement - Rear**.

ENGINE MOUNT INSPECTION

NOTE: Before replacing any engine mount due to suspected fluid loss, verify that the source of the fluid is the engine mount, not the engine or accessories.

1. Install the engine support fixture. Raising the engine removes the weight from the engine mount and creates slight tension in the rubber.
2. Observe the engine mount while raising the engine. Replace the engine mount if the engine mount exhibits any of the following conditions:
   - The hard rubber surface is covered with heat check cracks.
   - The rubber is separated from the metal plate of the engine mount.
   - The rubber is split through the center of the engine mount.
   - The GLYCOL™ fluid is leaking from the engine mount.

3. If there is movement between the metal plate of the engine mount and its attaching points, lower the engine on the engine mount. Tighten the bolts or nuts attaching the engine mount to the frame or engine mount bracket. Refer to **Engine Mount Replacement - Left Side**, or **Engine Mount Replacement - Right Side**.

ENGINE MOUNT REPLACEMENT - LEFT SIDE

Removal Procedure

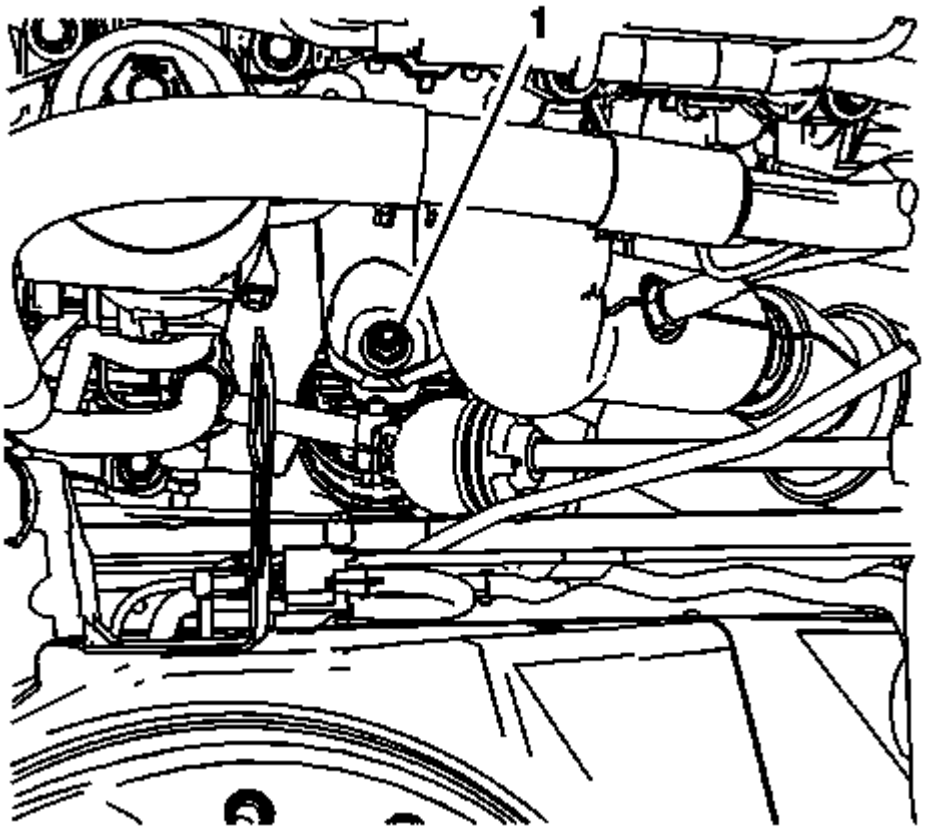

Fig. 11: Engine Mounting Bracket Retaining Nut
Courtesy of GENERAL MOTORS COMPANY

1. Remove the left hand engine mount to engine mounting bracket retaining nut (1).
2. Raise and support the vehicle. Refer to **Lifting and Jacking the Vehicle** .

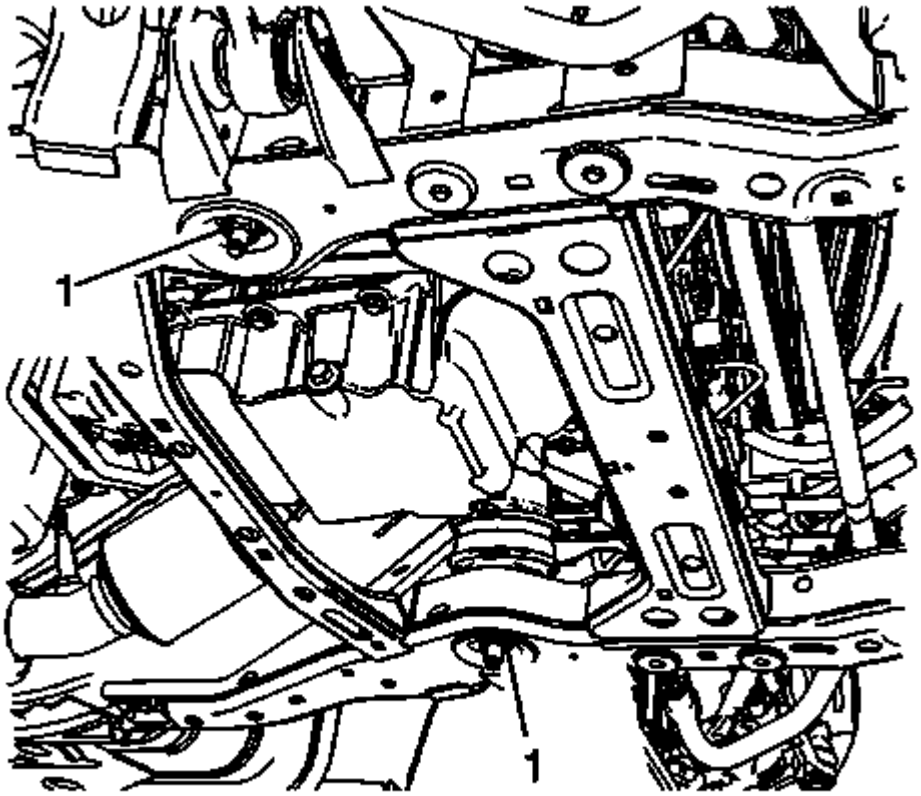

Fig. 12: Lower Engine Mount Nuts
Courtesy of GENERAL MOTORS COMPANY

NOTE: Removal of both lower engine mount nuts (1) will prevent stretching of the mount that isn't being replaced when the engine is lifted

3. Remove and discard the engine mount to front frame retaining nuts (1).
4. Position a screw jack and a block of wood under the engine oil pan.
5. Using the screw jack, carefully raise the engine until the engine is lifted high enough to remove the left hand engine mount.

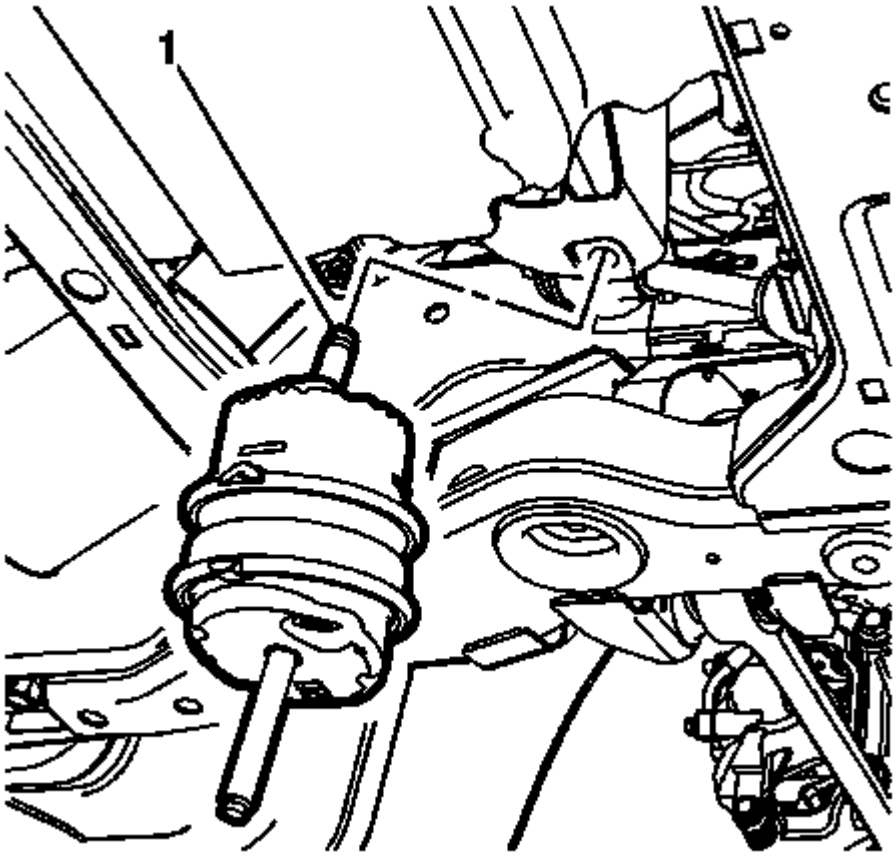

Fig. 13: Left Hand Engine Mount
Courtesy of GENERAL MOTORS COMPANY

6. Remove the left hand engine mount (1) from the vehicle.

Installation Procedure

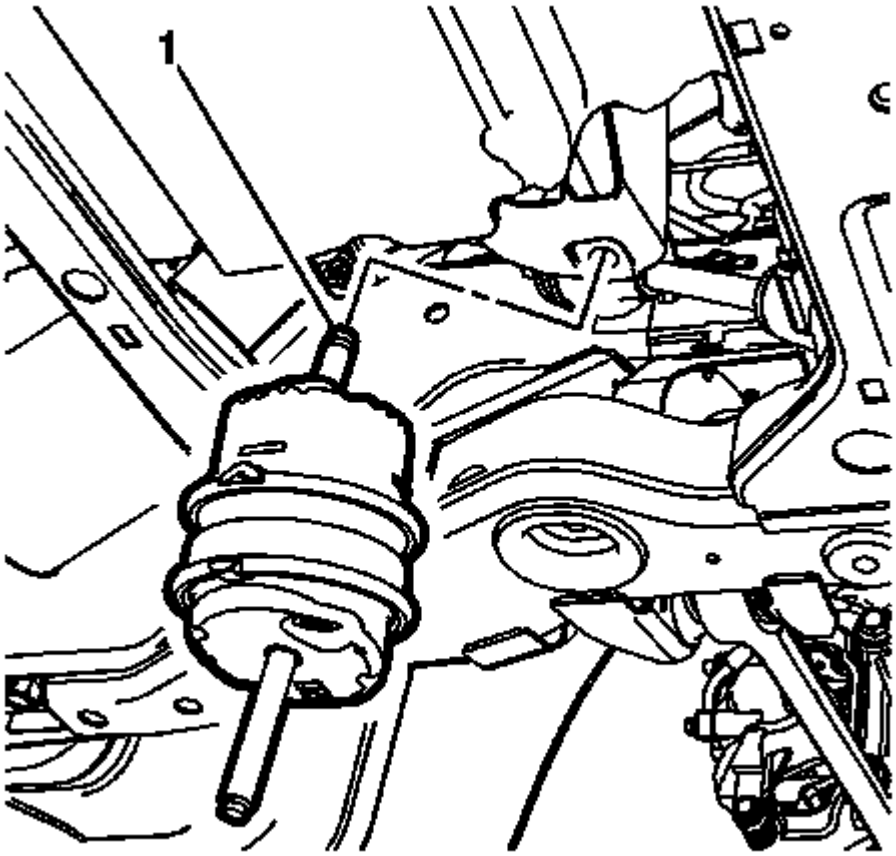

Fig. 14: Left Hand Engine Mount
Courtesy of GENERAL MOTORS COMPANY

1. Install the left hand engine mount (1) to the frame rail.

NOTE: **When lowering the engine, ensure the right engine mount lower stud is aligned with the hole in the right frame rail.**

2. Carefully lower the engine with the screw jack until the upper engine mount stud enters the left hand engine mount bracket hole.
3. Remove the screw jack and block of wood.

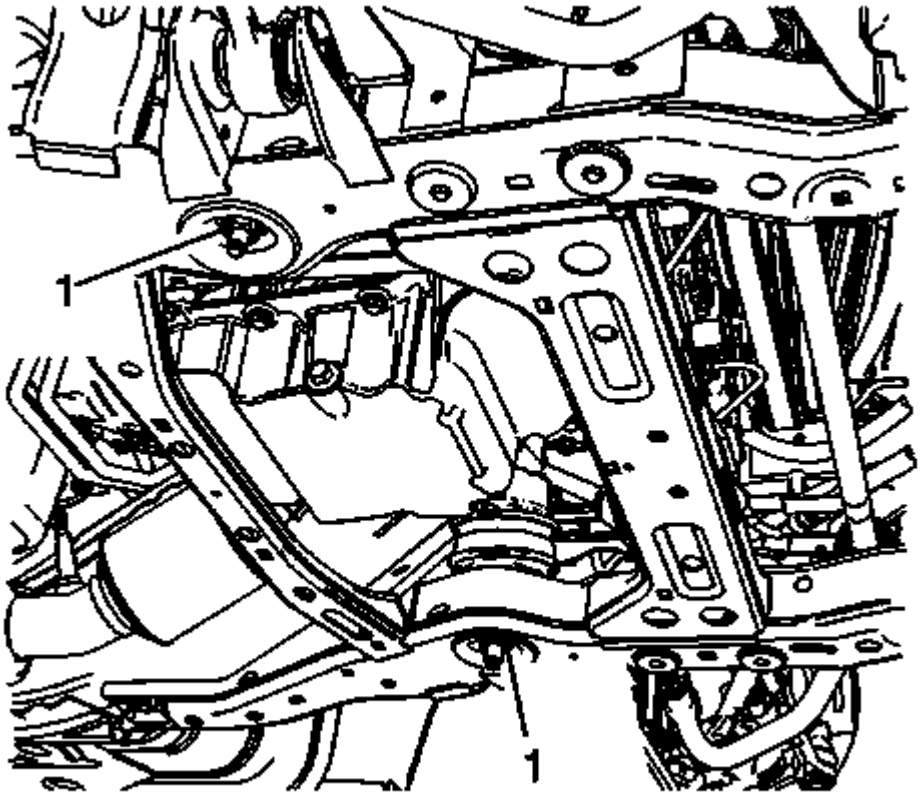

Fig. 15: Lower Engine Mount Nuts
Courtesy of GENERAL MOTORS COMPANY

CAUTION: Refer to Fastener Caution .

4. Install NEW engine mount to frame retaining nuts (1).

   Tighten

   Tighten the nuts to 80 N.m (59 lb ft).

5. Lower the vehicle.

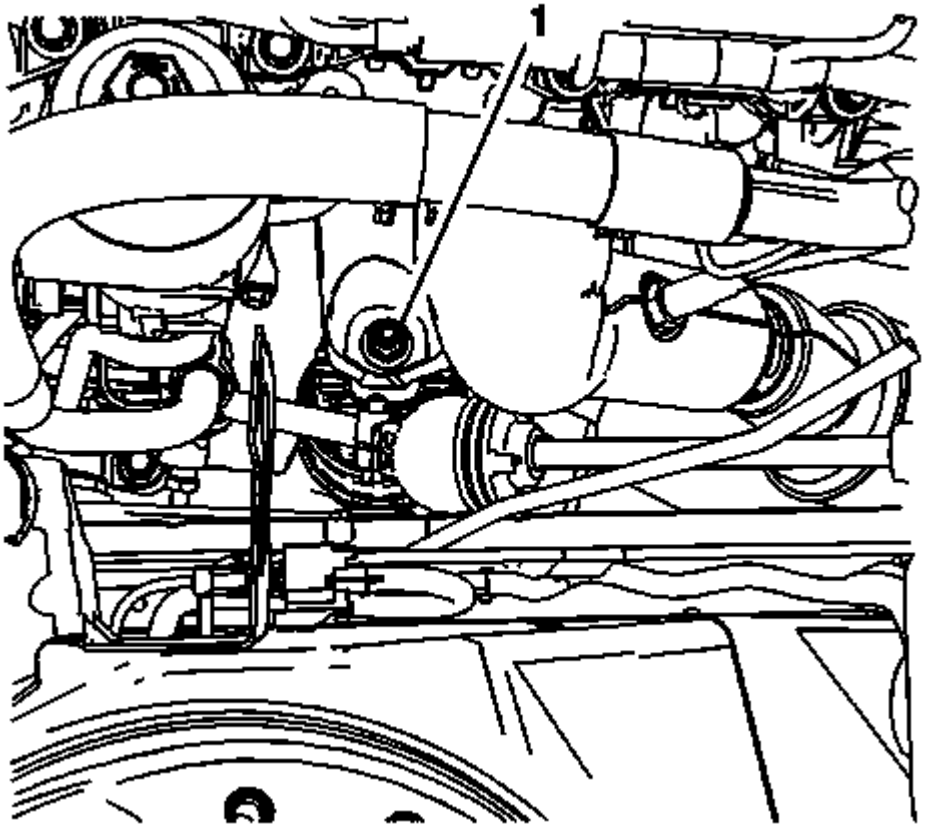

Fig. 16: Engine Mounting Bracket Retaining Nut
Courtesy of GENERAL MOTORS COMPANY

6. Install the left hand engine mount to engine mounting bracket retaining nut (1).

   Tighten

   Tighten the nut to 80 N.m (59 lb ft).

ENGINE MOUNT REPLACEMENT - RIGHT SIDE

Removal Procedure

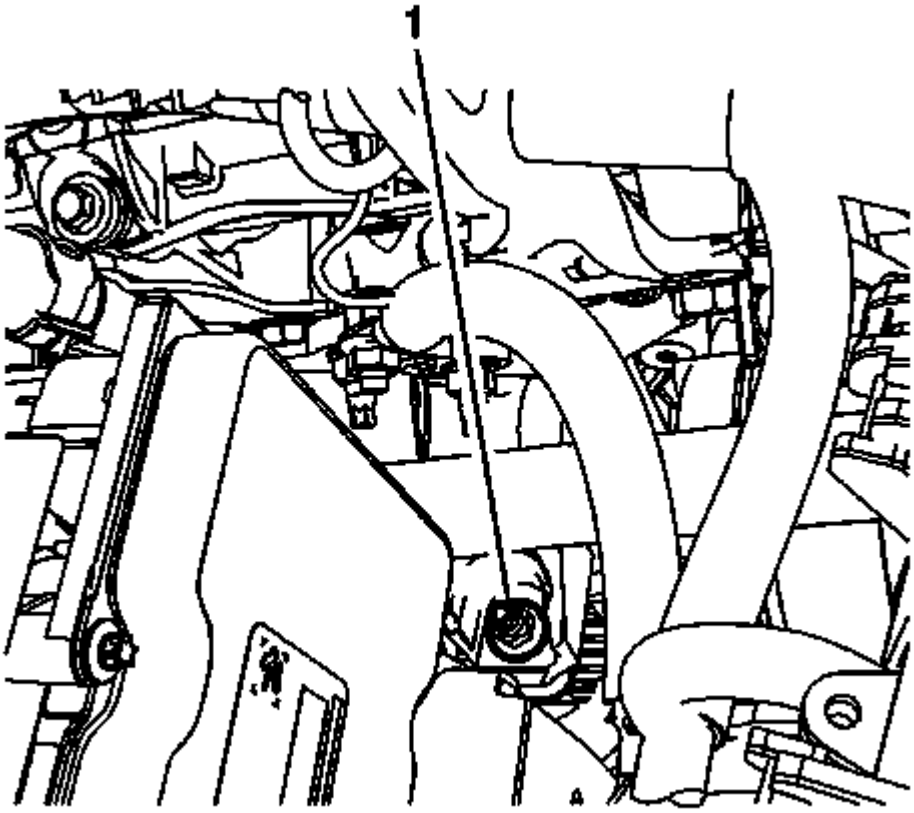

Fig. 17: Engine Mounting Bracket Retaining Nut
Courtesy of GENERAL MOTORS COMPANY

1. Remove the right hand engine mount to engine mounting bracket retaining nut (1).
2. Raise and support the vehicle. Refer to **Lifting and Jacking the Vehicle** .

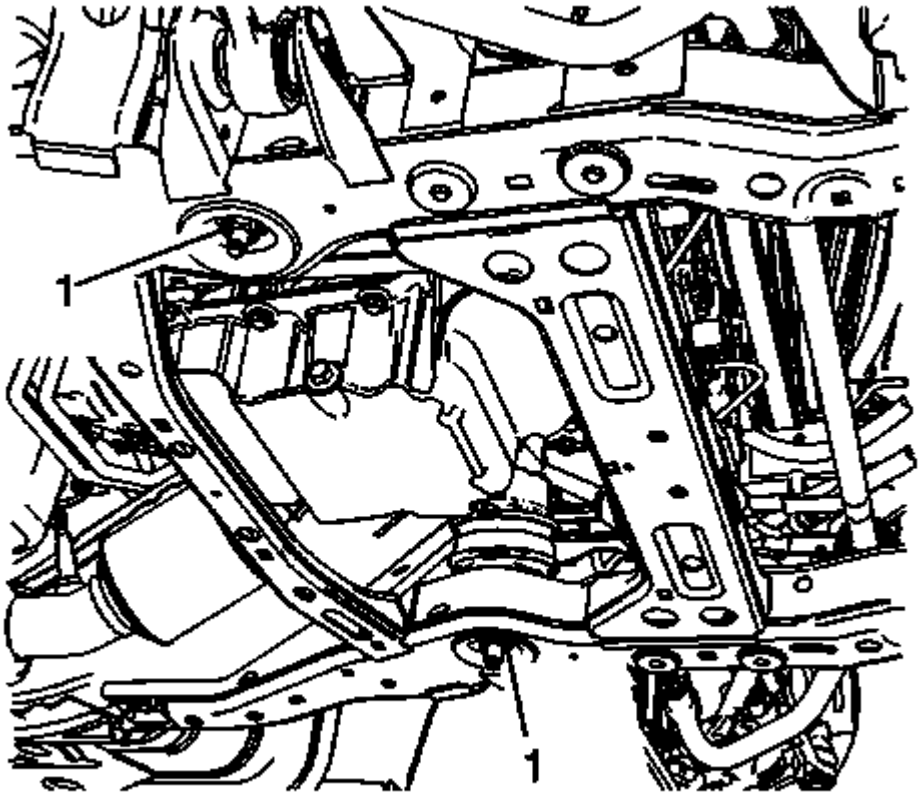

Fig. 18: Lower Engine Mount Nuts
Courtesy of GENERAL MOTORS COMPANY

NOTE: Removal of both lower engine mount nuts (1) will prevent stretching of the mount that isn't being replaced when the engine is lifted

3. Remove and discard the engine mount to front frame retaining nuts (1).
4. Position a screw jack and a block of wood under the engine oil pan.
5. Using the screw jack, carefully raise the engine until the engine is lifted high enough to remove the right hand engine mount.

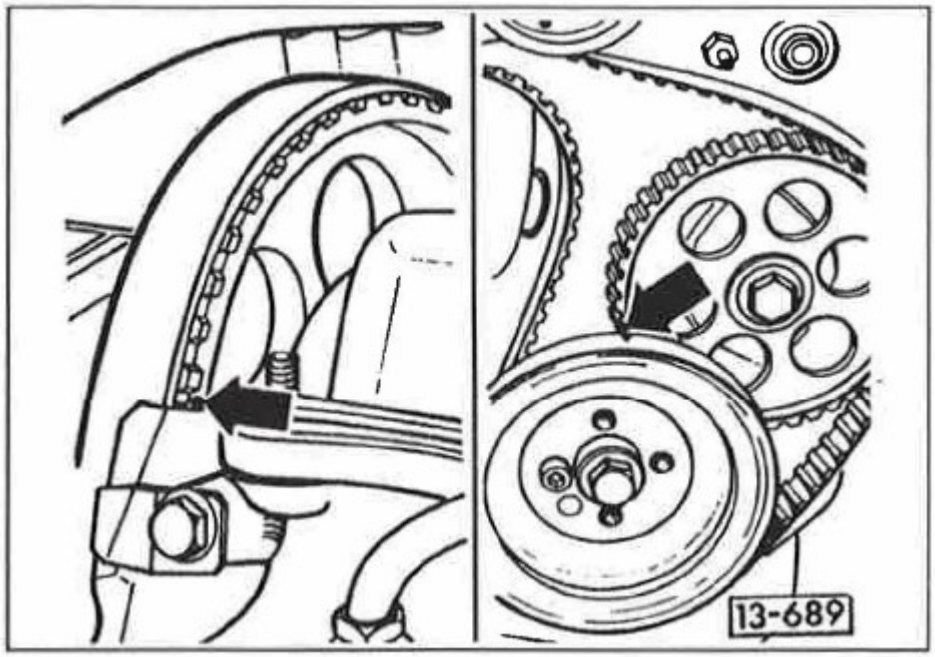

Fig. 19: Right Hand Engine Mount
Courtesy of GENERAL MOTORS COMPANY

6. Remove the right hand engine mount (1) from the vehicle.

Installation Procedure

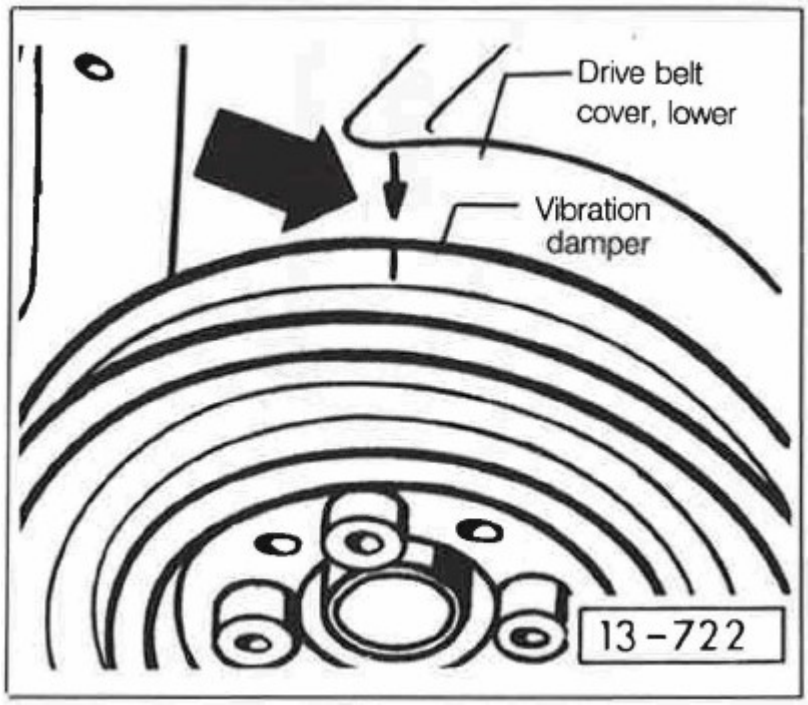

Fig. 20: Right Hand Engine Mount
Courtesy of GENERAL MOTORS COMPANY

1. Install the right hand engine mount (1) to the frame rail.

NOTE: When lowering the engine, ensure the left engine mount lower stud is aligned with the hole in the left frame rail.

2. Carefully lower the engine with the screw jack until the upper engine mount stud enters the right hand engine mount bracket hole.
3. Remove the screw jack and block of wood.

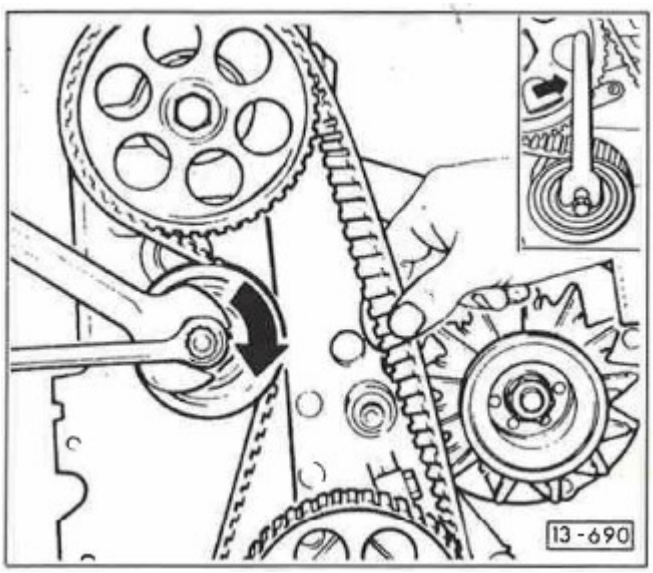

Fig. 21: Lower Engine Mount Nuts
Courtesy of GENERAL MOTORS COMPANY

CAUTION: Refer to Fastener Caution .

4. Install NEW engine mount to frame retaining nuts (1).

Tighten

Tighten the nuts to 80 N.m (59 lb ft).

5. Lower the vehicle.

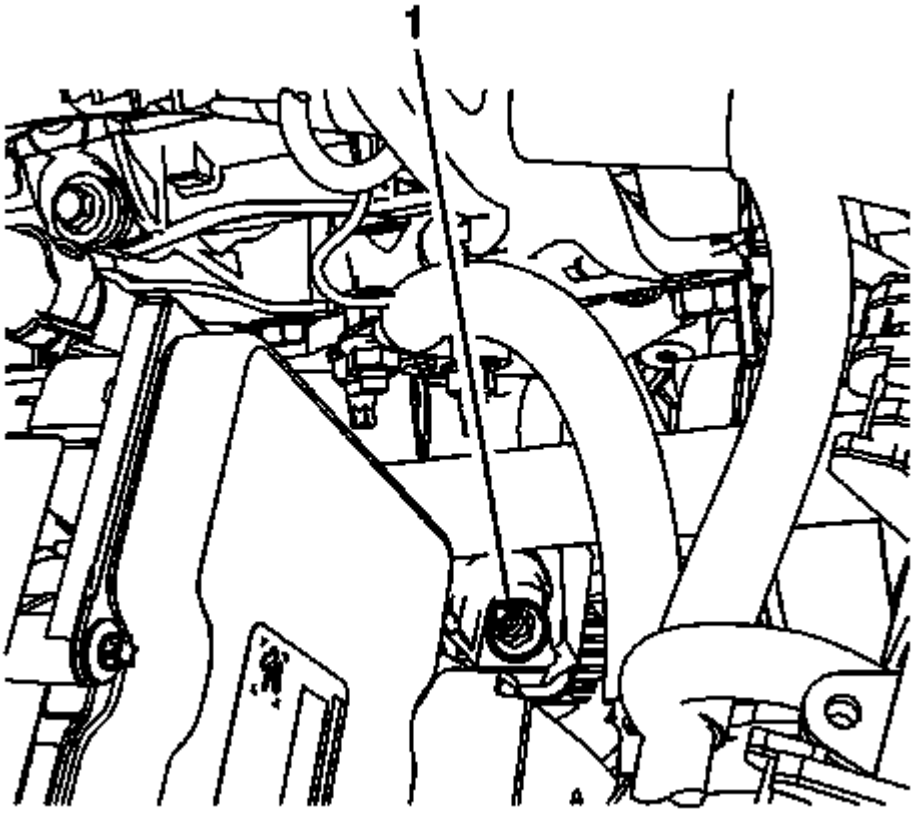

Fig. 22: Engine Mounting Bracket Retaining Nut
Courtesy of GENERAL MOTORS COMPANY

6. Install the right hand engine mount to engine mounting bracket retaining nut (1).

   Tighten

   Tighten the nut to 80 N.m (59 lb ft).

ENGINE MOUNT BRACKET REPLACEMENT - LEFT SIDE

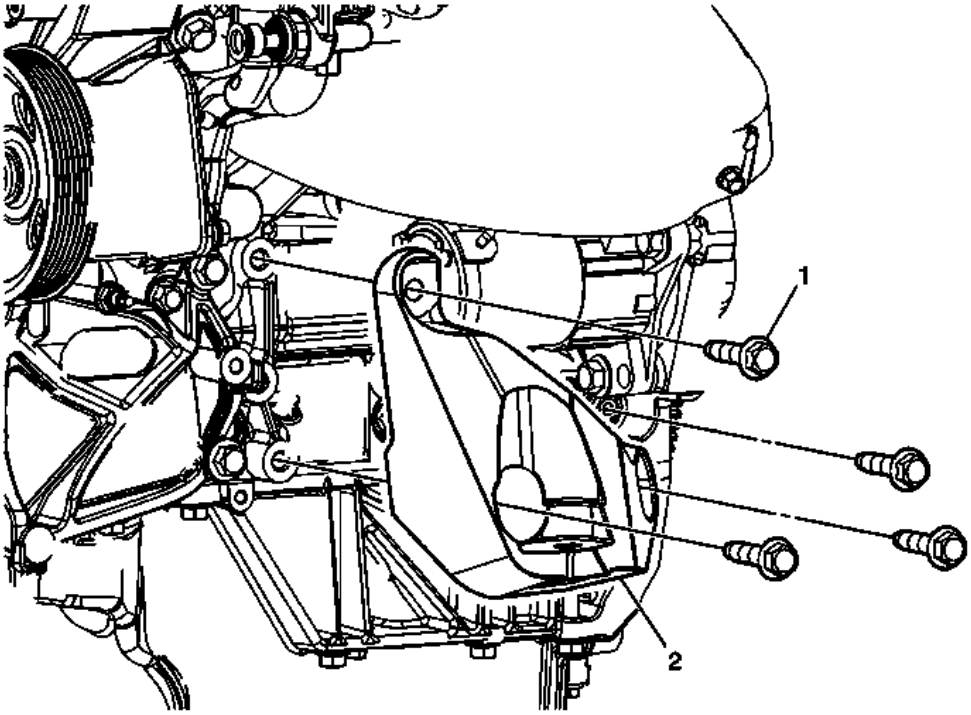

Fig. 23: Engine Mount Bracket And Fasteners - Left Side
Courtesy of GENERAL MOTORS COMPANY

Engine Mount Bracket Replacement - Left Side

Callout	Component Name
Preliminary Procedure Remove the engine mount. Refer to **Engine Mount Replacement - Left Side**.	
1	Engine Mount Bracket Fastener (Qty: 4) **CAUTION:** **Refer to Fastener Caution .** **Tighten** 60 N.m (44 lb ft)
2	Engine Mount Bracket **Procedure** Transfer components as necessary.

ENGINE MOUNT BRACKET REPLACEMENT - RIGHT SIDE

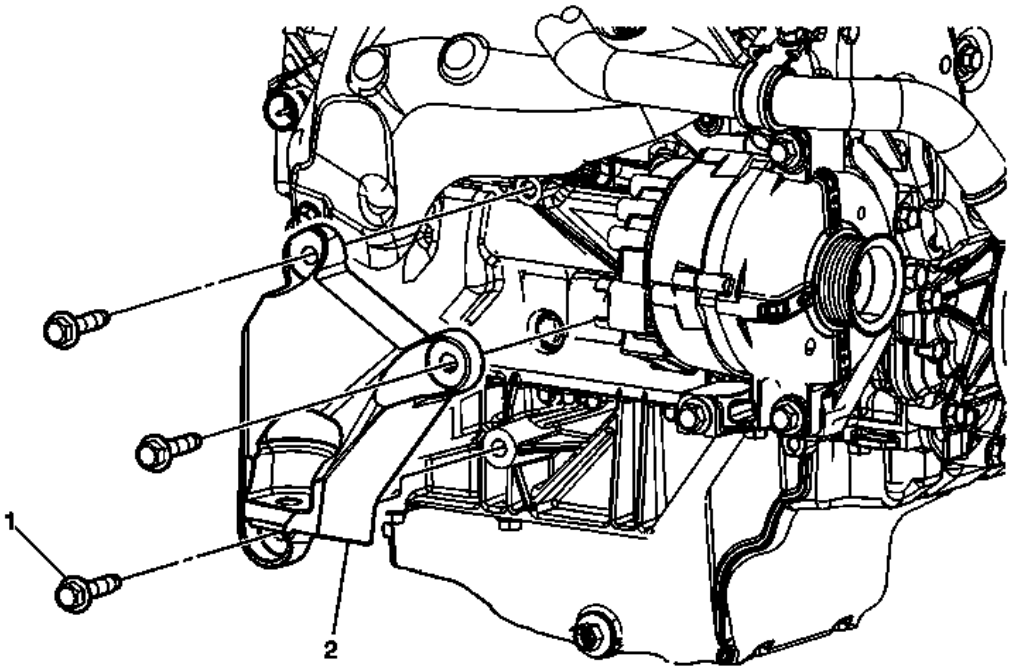

Fig. 24: Engine Mount Bracket And Fasteners - Right Side
Courtesy of GENERAL MOTORS COMPANY

Engine Mount Bracket Replacement - Right Side

Callout	Component Name
Preliminary Procedure Remove the engine mount. Refer to **Engine Mount Replacement - Right Side**.	
1	Engine Mount Bracket Fastener (Qty: 4) **CAUTION:** **Refer to Fastener Caution .** **Tighten** 60 N.m (44 lb ft)
2	Engine Mount Bracket **Procedure** Transfer components as necessary.

INTAKE MANIFOLD COVER REPLACEMENT - FRONT

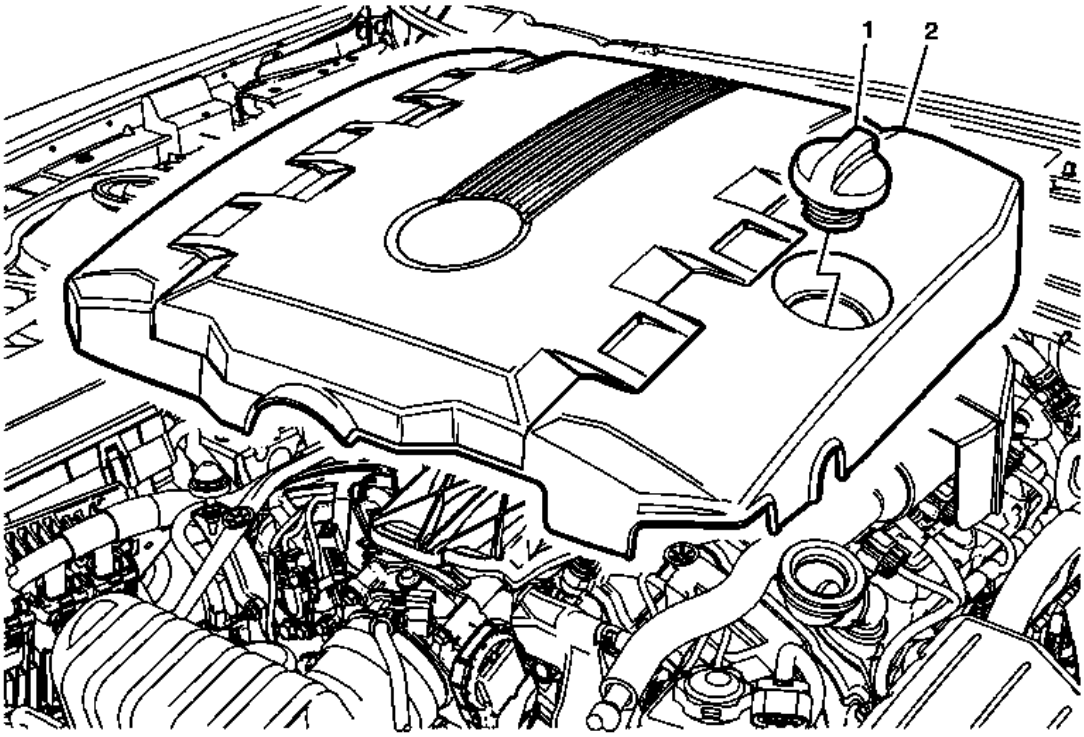

Fig. 25: Intake Manifold Cover
Courtesy of GENERAL MOTORS COMPANY

Intake Manifold Cover Replacement - Front

Callout	Component Name
1	Oil Filler Cap
2	Intake Manifold Cover **Procedure** 1. Grasp cover on outside edges and lift up to release from retainers. 2. Pull the cover forward to remove from the rear tabs.

INTAKE MANIFOLD COVER REPLACEMENT - REAR

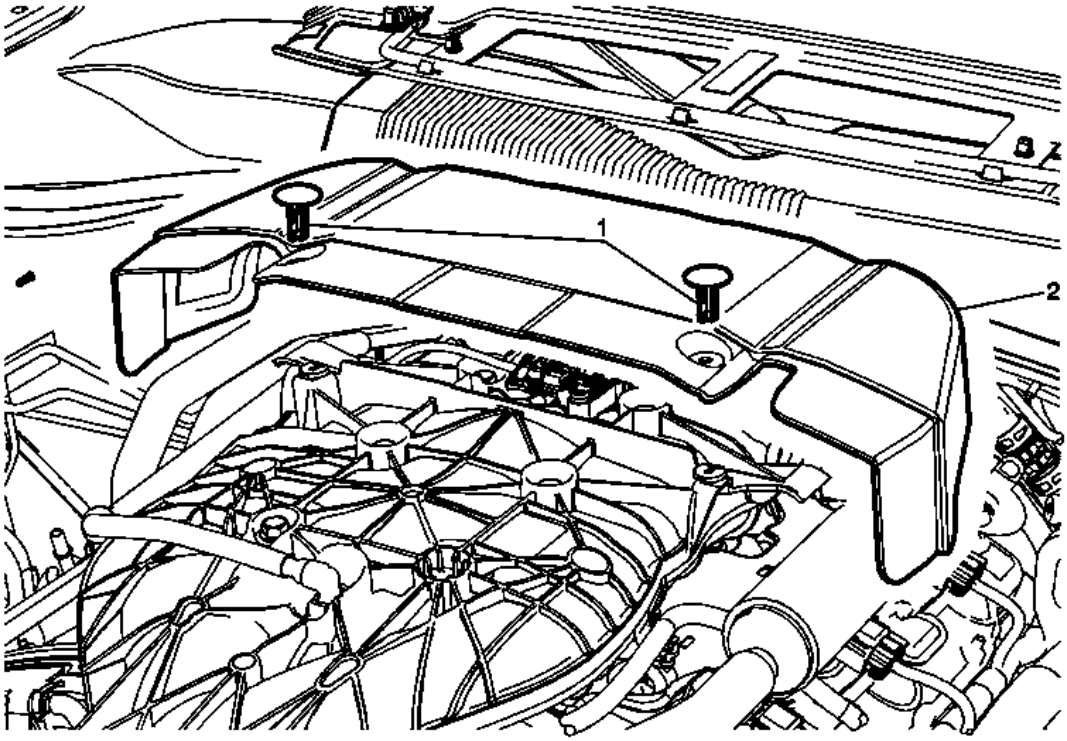

Fig. 26: Intake Manifold Cover & Retainers
Courtesy of GENERAL MOTORS COMPANY

Intake Manifold Cover Replacement - Rear

Callout	Component Name
Preliminary Procedure Remove the front intake manifold cover. Refer to **Intake Manifold Cover Replacement - Front**.	
1	Rear Intake manifold Cover Retainer (QTY:2)
2	Rear Intake Manifold Cover

POSITIVE CRANKCASE VENTILATION HOSE/PIPE/TUBE REPLACEMENT

Removal Procedure

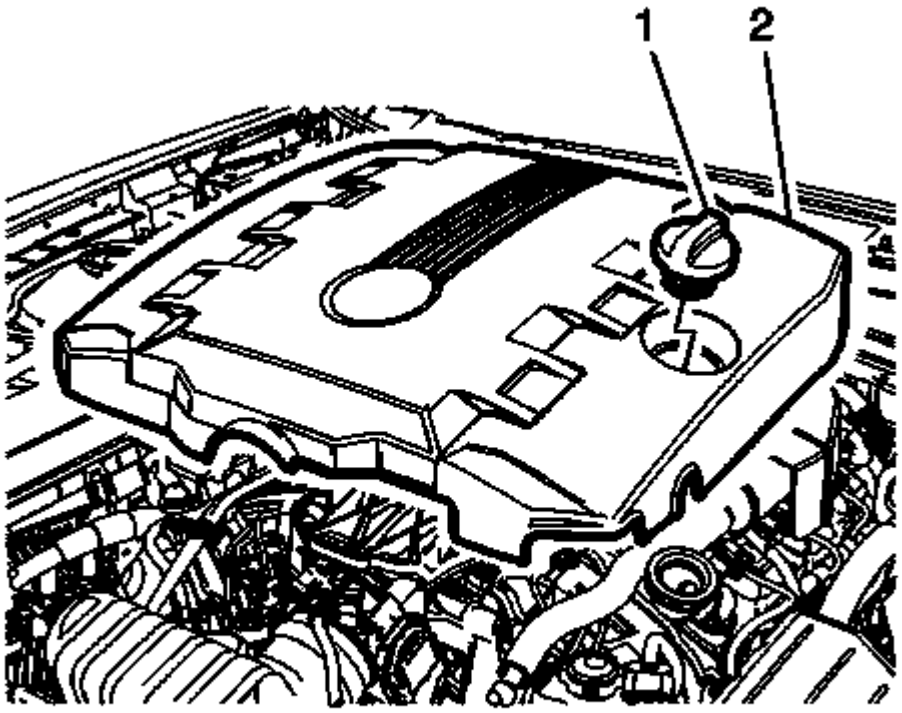

Fig. 27: Intake Manifold Cover & Cap
Courtesy of GENERAL MOTORS COMPANY

1. Remove the intake manifold cover (2). Refer to **Intake Manifold Cover Replacement - Front**.

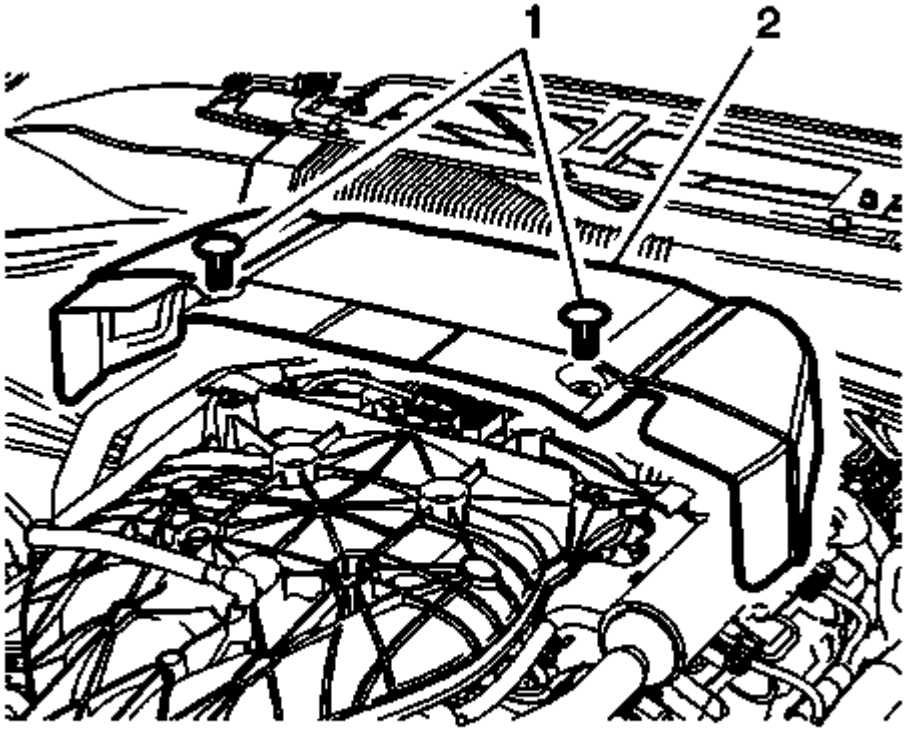

Fig. 28: Rear Intake Manifold Cover & Retainers
Courtesy of GENERAL MOTORS COMPANY

2. Remove the rear intake manifold cover retainers (1).
3. Remove the rear intake manifold cover (2).

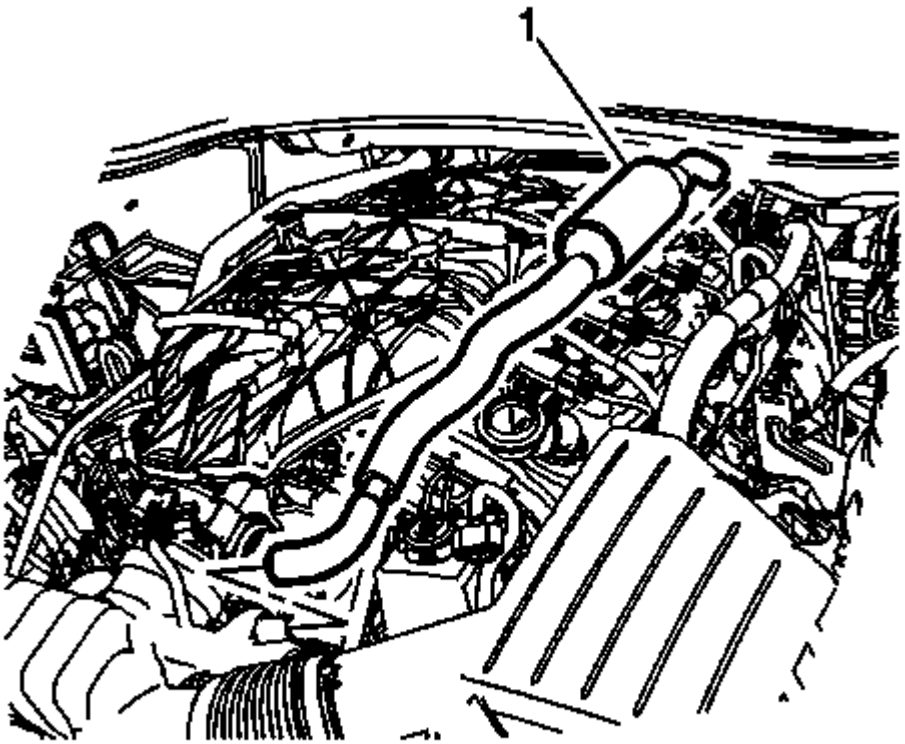

Fig. 29: PCV Fresh Air Tube
Courtesy of GENERAL MOTORS COMPANY

4. Remove the positive crankcase ventilation (PCV) fresh air tube (1) from the left camshaft cover.
5. Remove the PCV fresh air tube (1) from the air inlet.

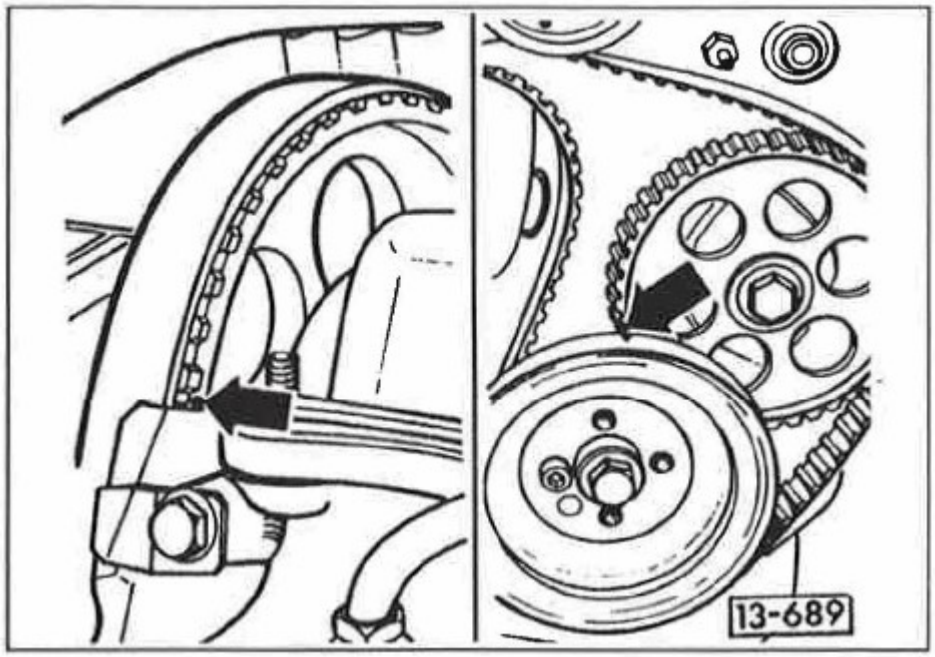

Fig. 30: PCV Dirty Air Tube
Courtesy of GENERAL MOTORS COMPANY

6. Remove the PCV dirty air tube (1) from the right camshaft cover.
7. Remove the PCV dirty air tube (1) from the intake manifold.

Installation Procedure

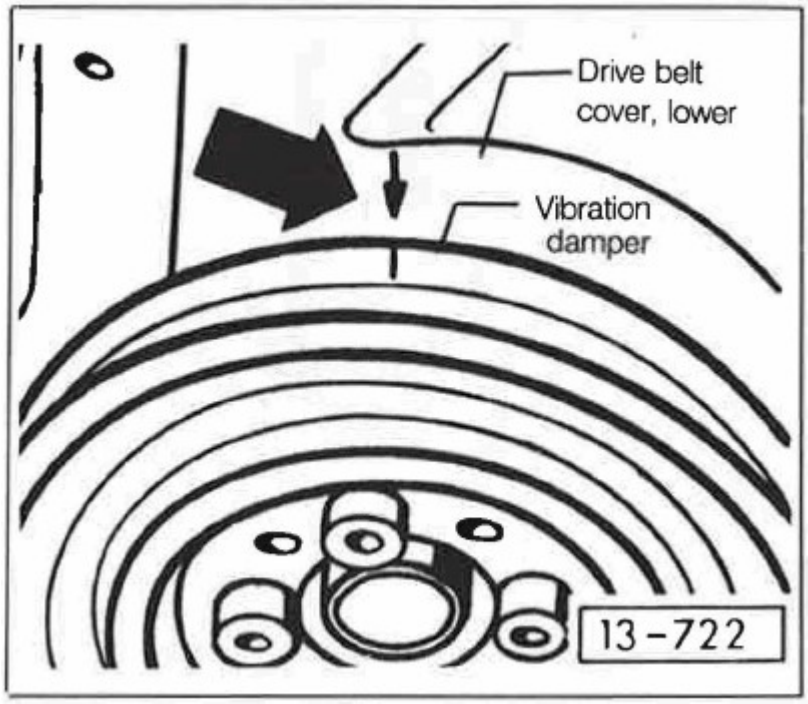

Fig. 31: PCV Dirty Air Tube

Courtesy of GENERAL MOTORS COMPANY

1. Install the PCV dirty air tube (1) to the intake manifold.
2. Install the PCV dirty air tube (1) to the right camshaft cover.

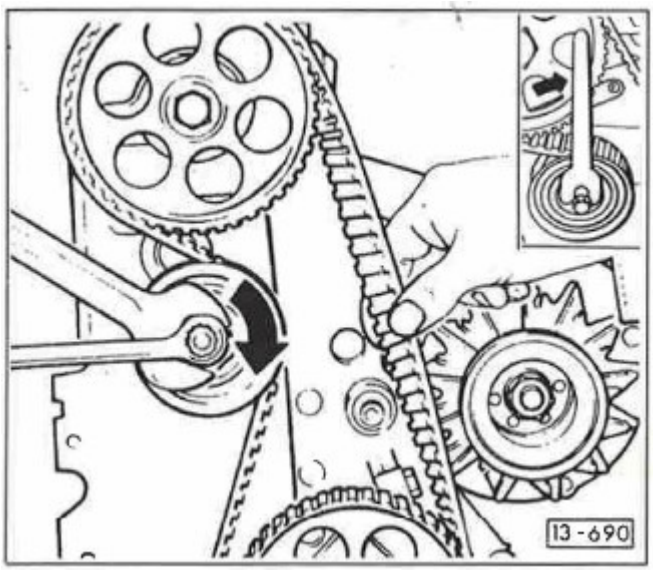

Fig. 32: PCV Fresh Air Tube
Courtesy of GENERAL MOTORS COMPANY

3. Install the PCV fresh air tube (1) to the air inlet.
4. Install the PCV fresh air tube (1) to the left camshaft cover.

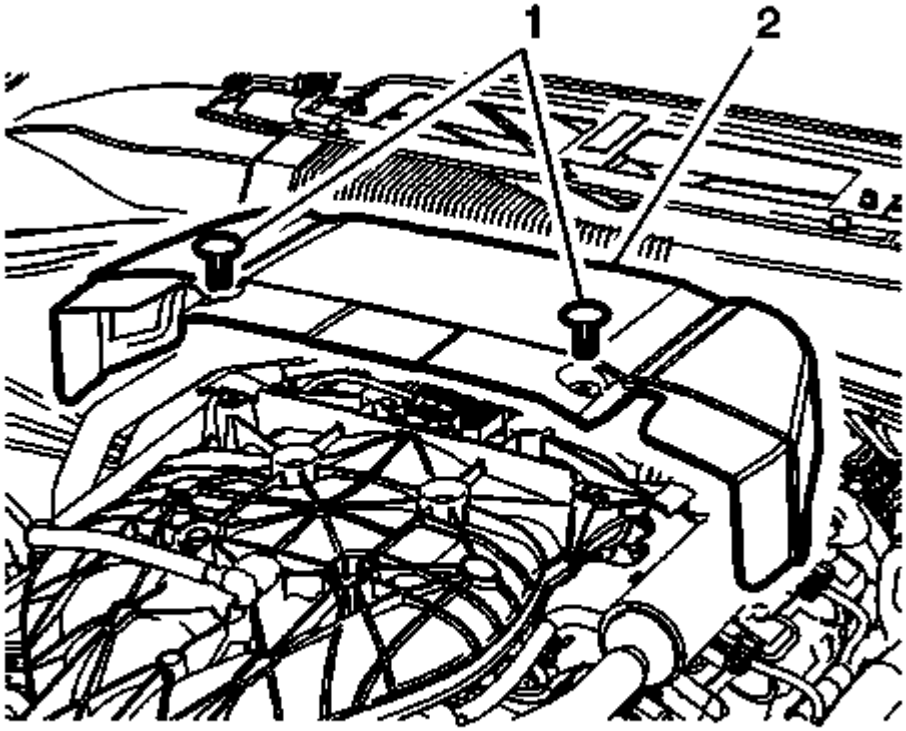

Fig. 33: Rear Intake Manifold Cover & Retainers
Courtesy of GENERAL MOTORS COMPANY

5. Install the rear intake manifold cover (2).
6. Install the two rear intake manifold cover retainers (1).

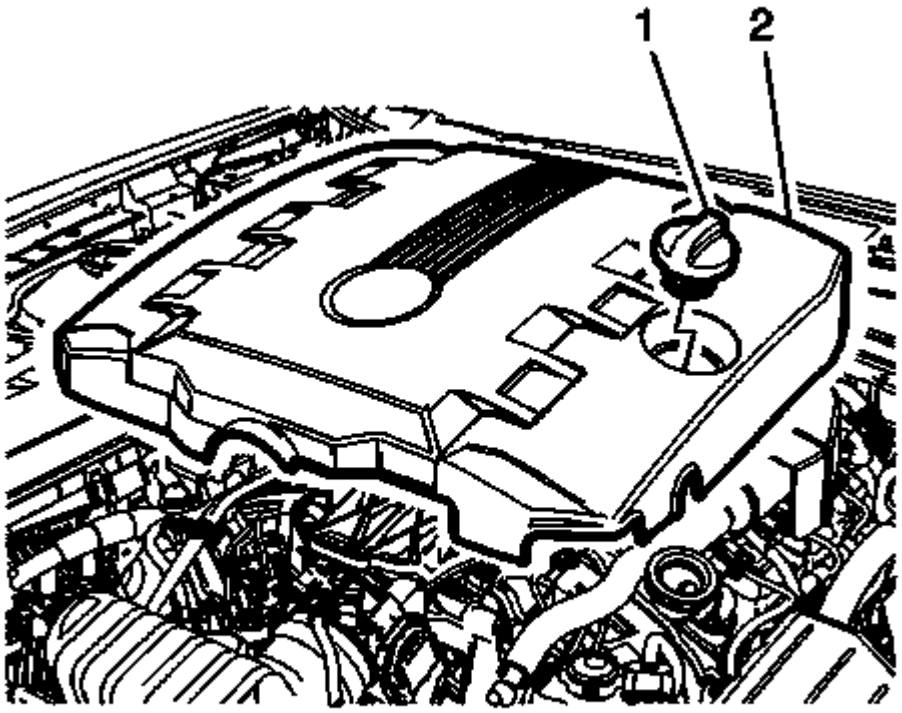

Fig. 34: Intake Manifold Cover & Cap
Courtesy of GENERAL MOTORS COMPANY

7. Install the intake manifold cover (2). Refer to **Intake Manifold Cover Replacement - Front**.

INTAKE MANIFOLD REPLACEMENT

Removal Procedure

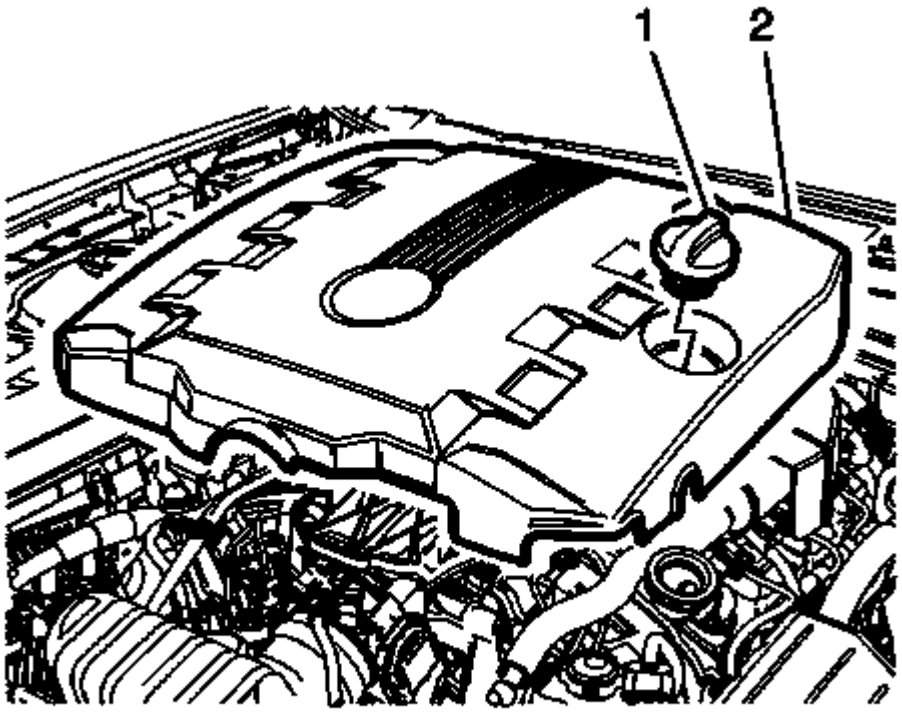

Fig. 35: Intake Manifold Cover & Cap
Courtesy of GENERAL MOTORS COMPANY

1. Remove the intake manifold cover (2). Refer to **Intake Manifold Cover Replacement - Front**.

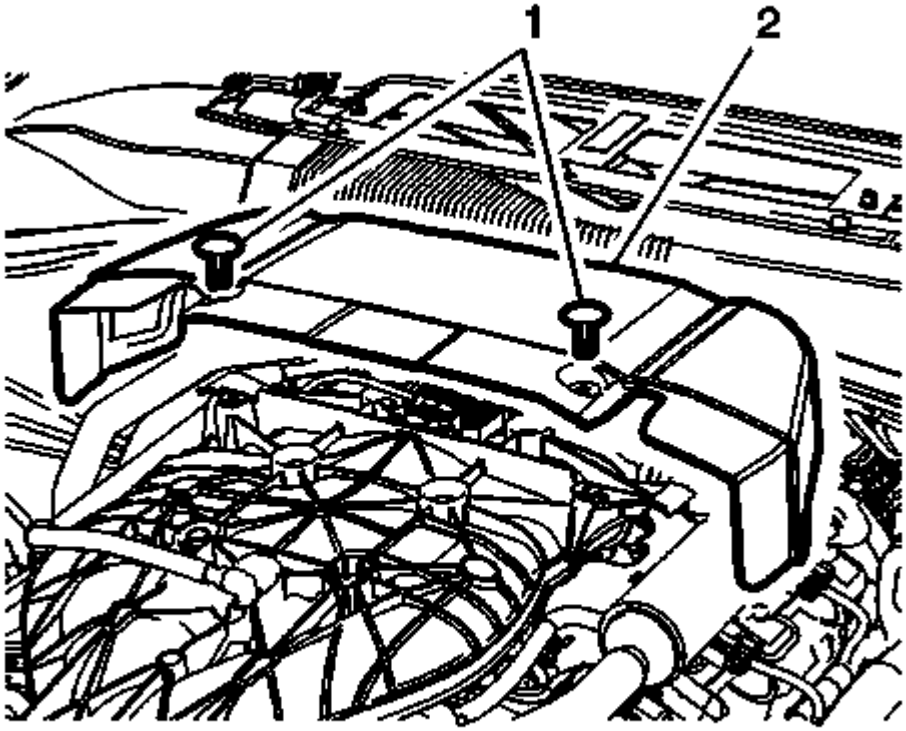

Fig. 36: Rear Intake Manifold Cover & Retainers
Courtesy of GENERAL MOTORS COMPANY

2. Remove the rear intake manifold cover retainers (1).
3. Remove the rear intake manifold cover (2).

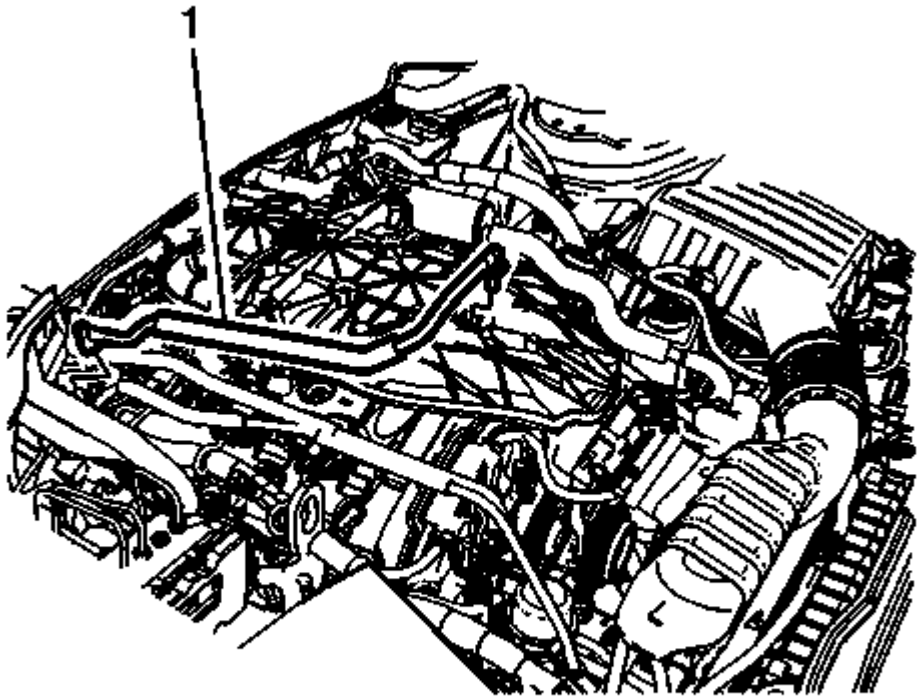

Fig. 37: PCV Dirty Air Tube
Courtesy of GENERAL MOTORS COMPANY

4. Remove the PCV dirty air tube (1) from the right camshaft cover.
5. Remove the PCV dirty air tube (1) from the intake manifold.
6. Remove the fuel pipe shield. Refer to **Fuel Pipe Shield Replacement** .
7. Remove the air outlet duct. Refer to **Air Cleaner Outlet Duct Replacement** .

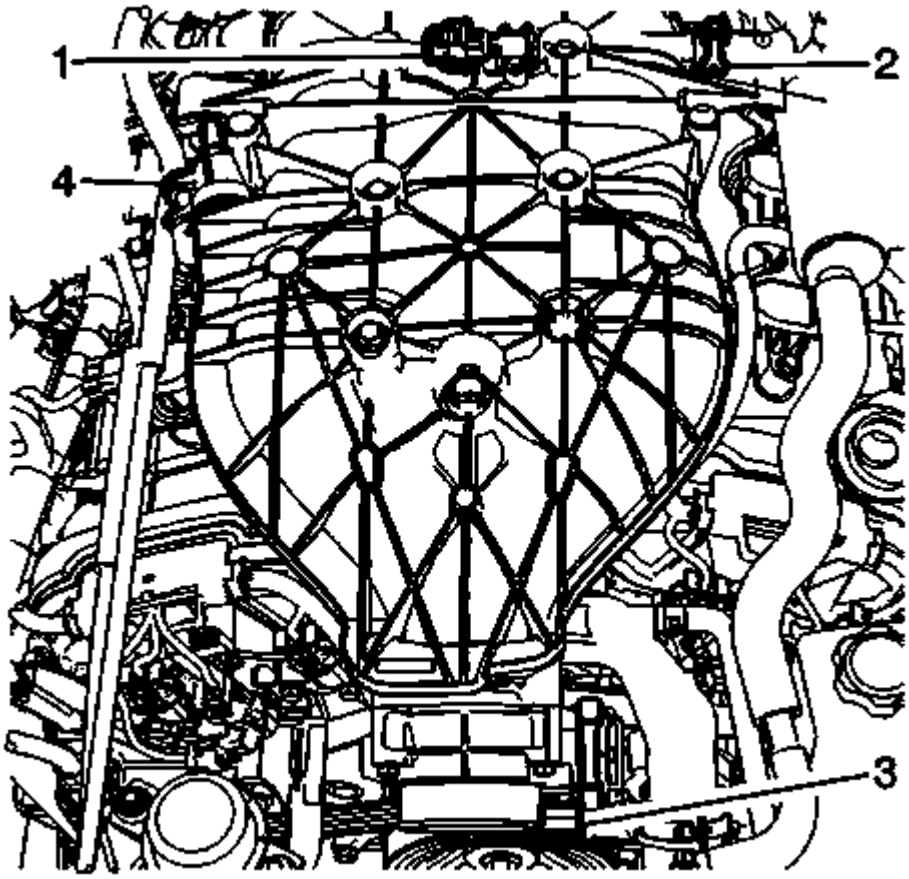

Fig. 38: Map Sensor Connector, Brake Booster Vacuum Hose, Throttle Body Electrical Connector & Purge Solenoid
Courtesy of GENERAL MOTORS COMPANY

8. Disconnect the brake booster vacuum hose (2) from the intake manifold.
9. Remove electrical connector and hose from the purge solenoid (4)
10. Disconnect the throttle body electrical connector (3).
11. Disconnect the map sensor connector (1).

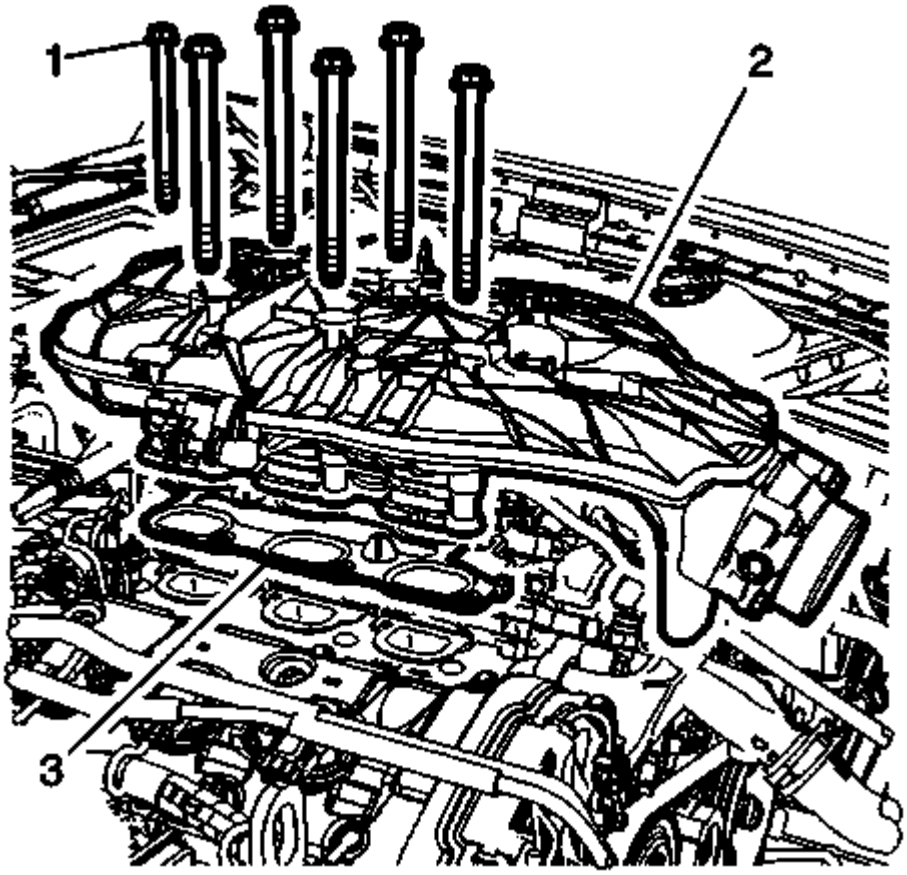

Fig. 39: Intake Manifold, Bolts & Gasket
Courtesy of GENERAL MOTORS COMPANY

12. Remove the intake manifold bolts (1).
13. Remove the intake manifold (2) and gasket (3).
14. If replacing the intake manifold, disassemble the intake manifold. Refer to **Intake Manifold Disassemble (LFX)** .

Installation Procedure

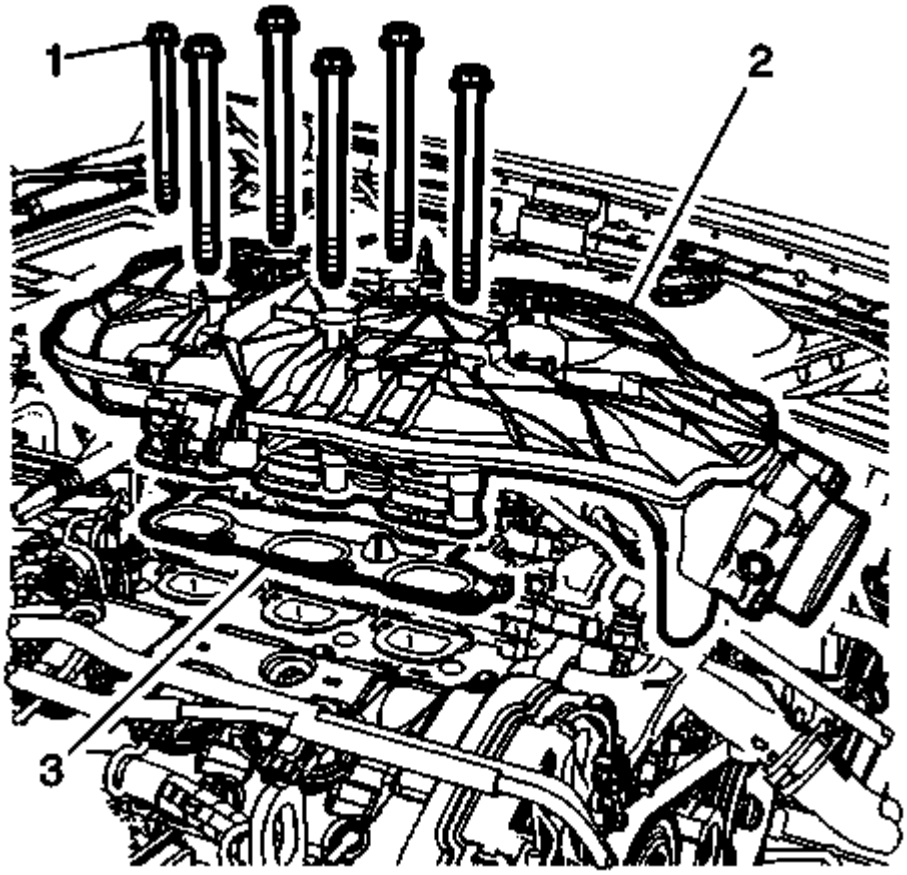

Fig. 40: Intake Manifold, Bolts & Gasket
Courtesy of GENERAL MOTORS COMPANY

1. If installing a new intake manifold, assemble the intake manifold. Refer to **Intake Manifold Assemble (LFX)** .
2. Install the NEW intake manifold gasket (3).
3. Position the intake manifold (2) and hand start the manifold bolts (1).

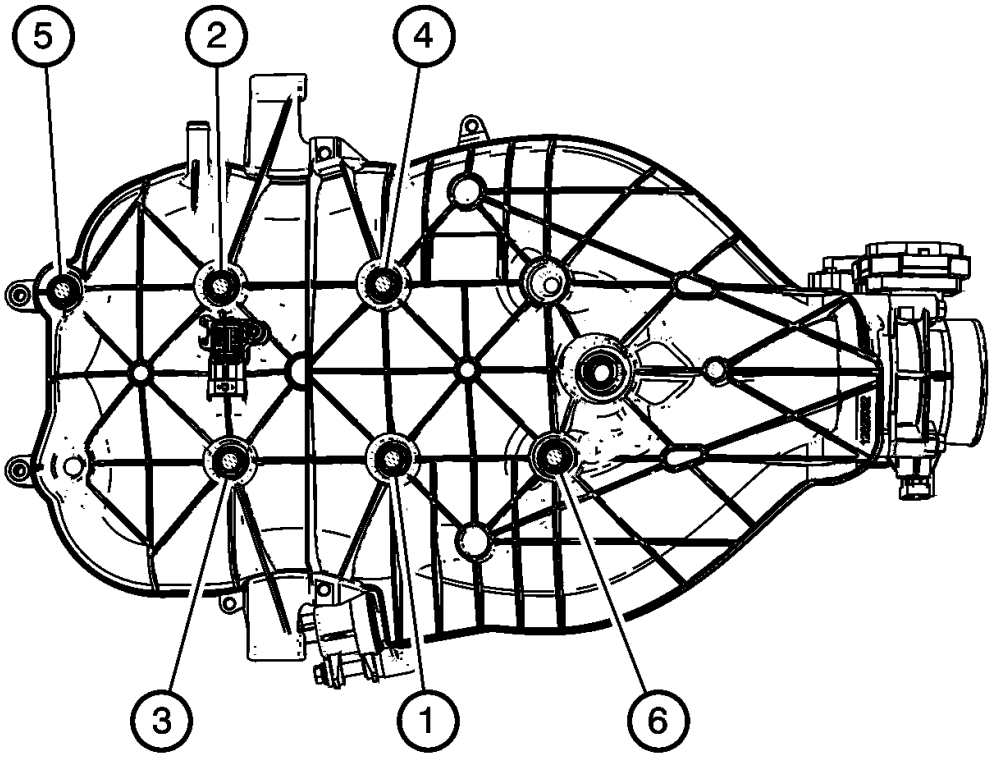

Fig. 41: Identifying Intake Manifold Bolts Tighten Sequence
Courtesy of GENERAL MOTORS COMPANY

CAUTION: Refer to Fastener Caution .

4. Tighten the intake manifold bolts in the sequence shown to 25 N.m (18 lb ft).
5. Tighten the intake manifold bolts a second pass in sequence to 25 N.m (18 lb ft).

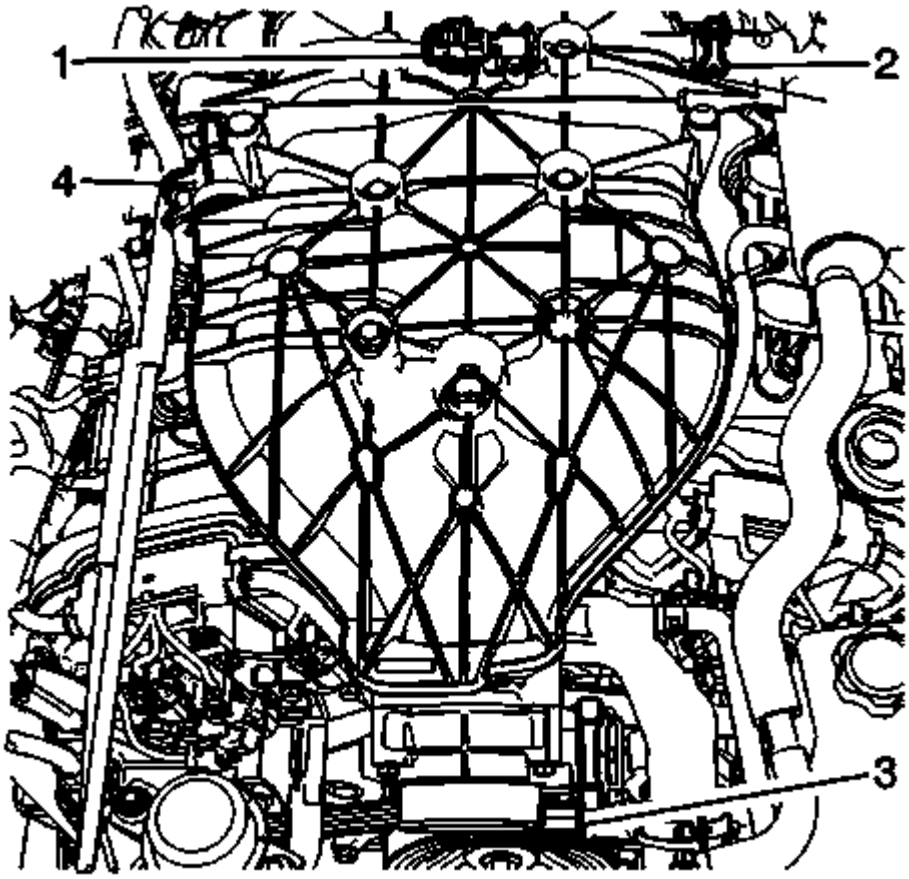

Fig. 42: Map Sensor Connector, Brake Booster Vacuum Hose, Throttle Body Electrical Connector & Purge Solenoid
Courtesy of GENERAL MOTORS COMPANY

6. Connect the brake booster vacuum hose (2) to the intake manifold.
7. Connect electrical connector and hose from the purge solenoid (4)
8. Connect the throttle body electrical connector (3).
9. Connect the map sensor connector (1).

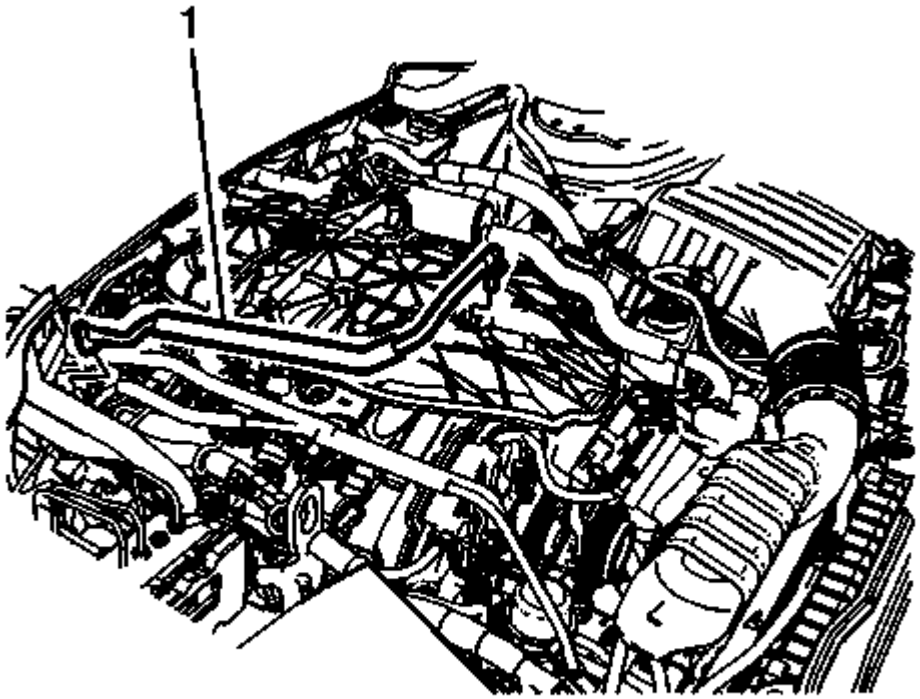

Fig. 43: PCV Dirty Air Tube
Courtesy of GENERAL MOTORS COMPANY

10. Install the PCV dirty air tube (1) to the right camshaft cover.
11. Install the PCV dirty air tube (1) to the intake manifold.
12. Install the air outlet duct. Refer to **Air Cleaner Outlet Duct Replacement** .
13. Install the fuel pipe shield. Refer to **Fuel Pipe Shield Replacement** .

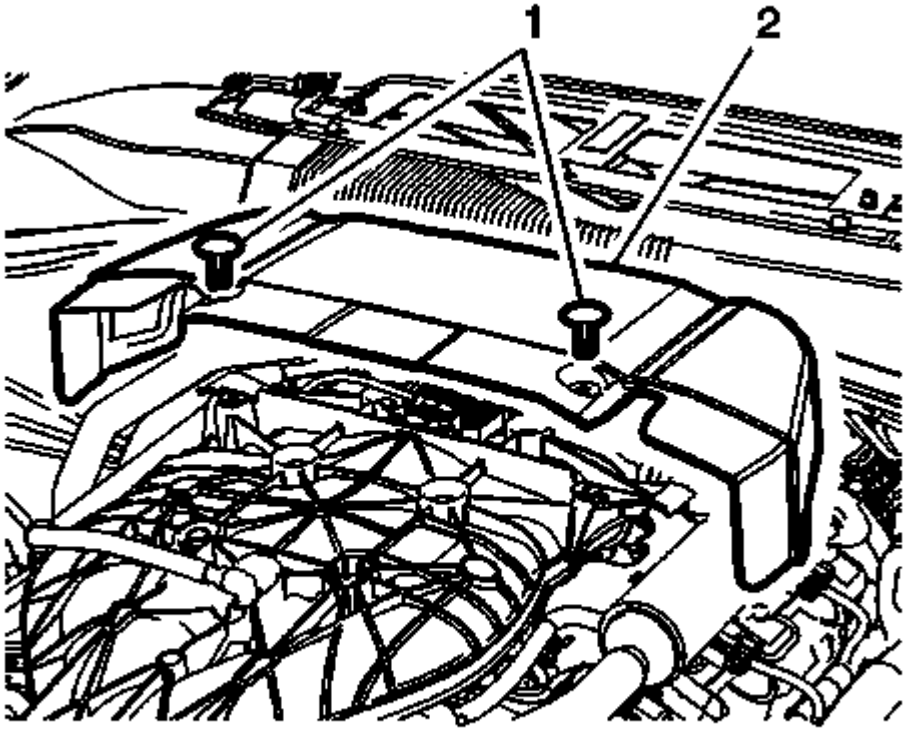

Fig. 44: Rear Intake Manifold Cover & Retainers
Courtesy of GENERAL MOTORS COMPANY

14. Install the rear intake manifold cover (2).
15. Install the rear intake manifold cover retainers (1).

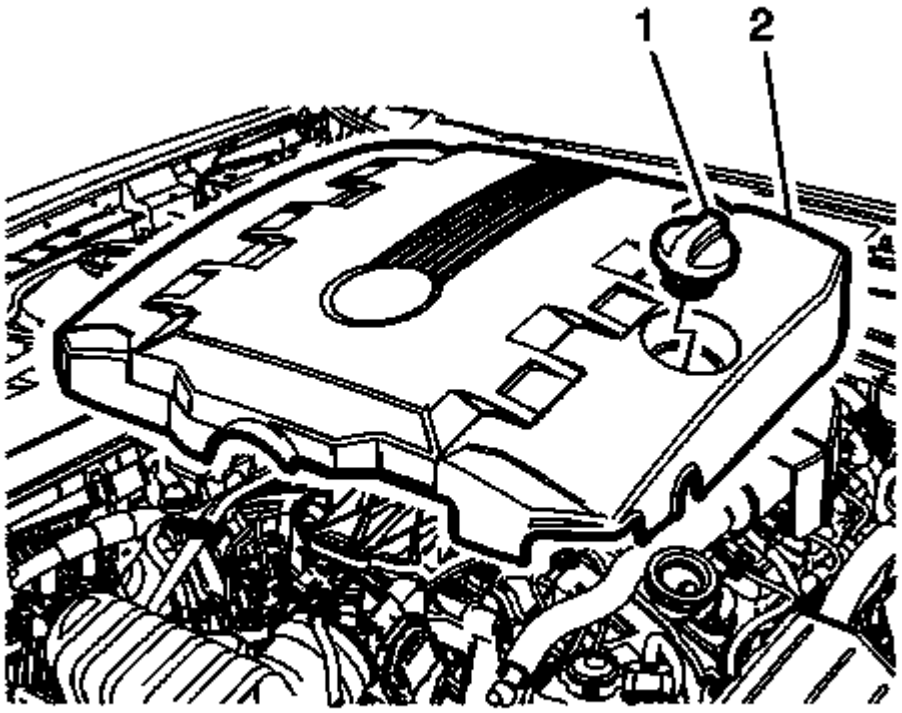

Fig. 45: Intake Manifold Cover & Cap
Courtesy of GENERAL MOTORS COMPANY

16. Install the intake manifold cover (2). Refer to **Intake Manifold Cover Replacement - Front**.

OIL LEVEL INDICATOR TUBE REPLACEMENT

Removal Procedure

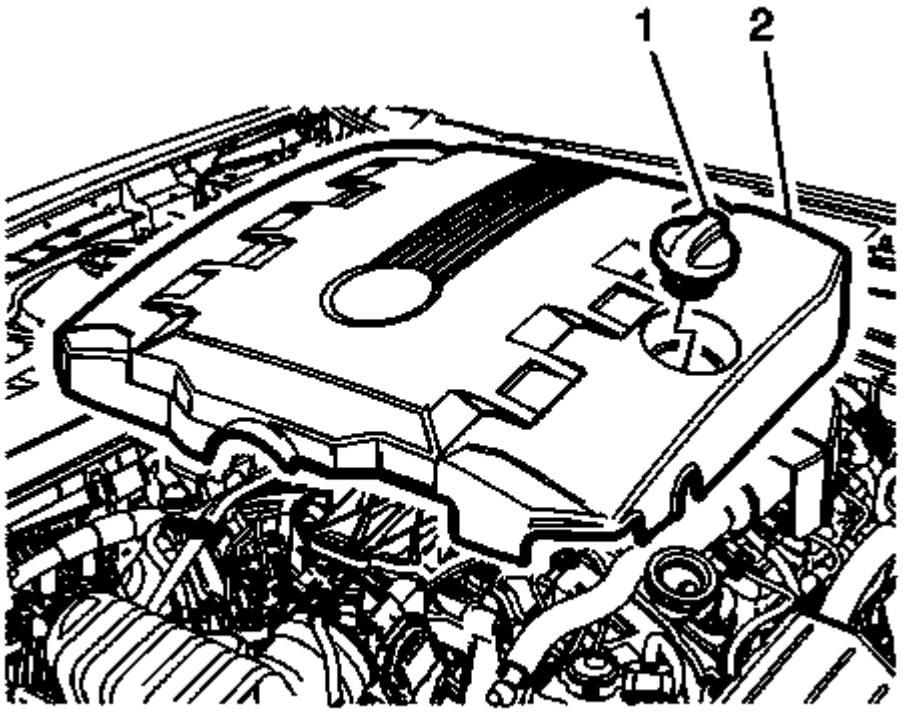

Fig. 46: Intake Manifold Cover & Cap
Courtesy of GENERAL MOTORS COMPANY

1. Remove the intake manifold cover (2). Refer to **Intake Manifold Cover Replacement - Front**.

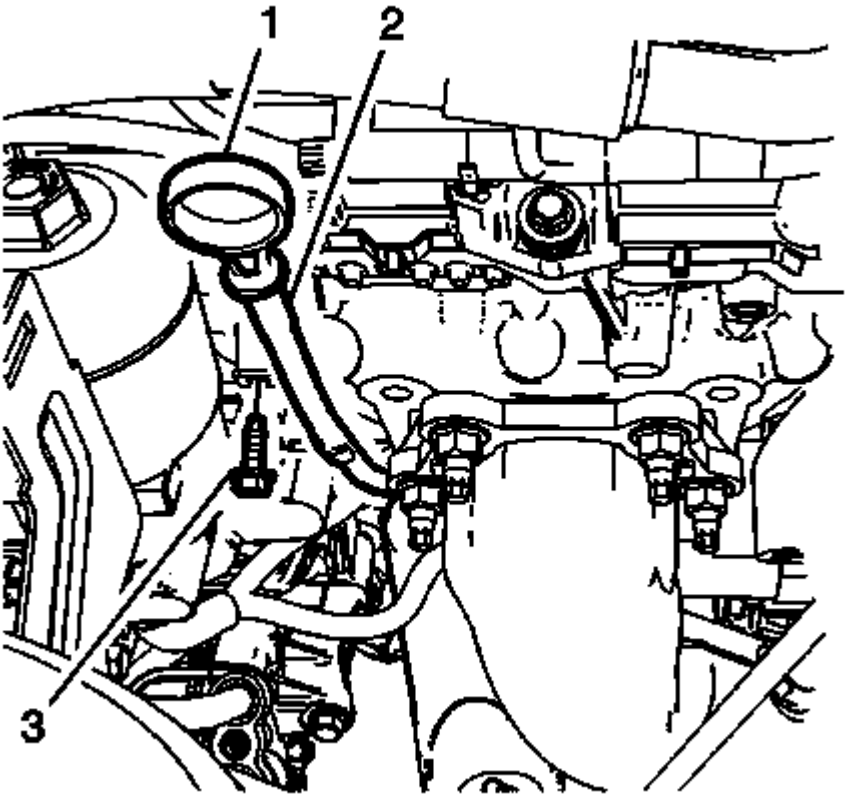

Fig. 47: Oil Level Indicator, Tube & Cylinder Head Retaining Bolt
Courtesy of GENERAL MOTORS COMPANY

2. Remove the oil level indicator (1) from the oil level indicator tube (3).
3. Remove the oil level indicator tube to cylinder head retaining bolt (3).

NOTE: **Apply suitable upward pressure to remove the oil level indicator tube from the engine.**

4. Remove the oil level indicator tube (2) from the engine.

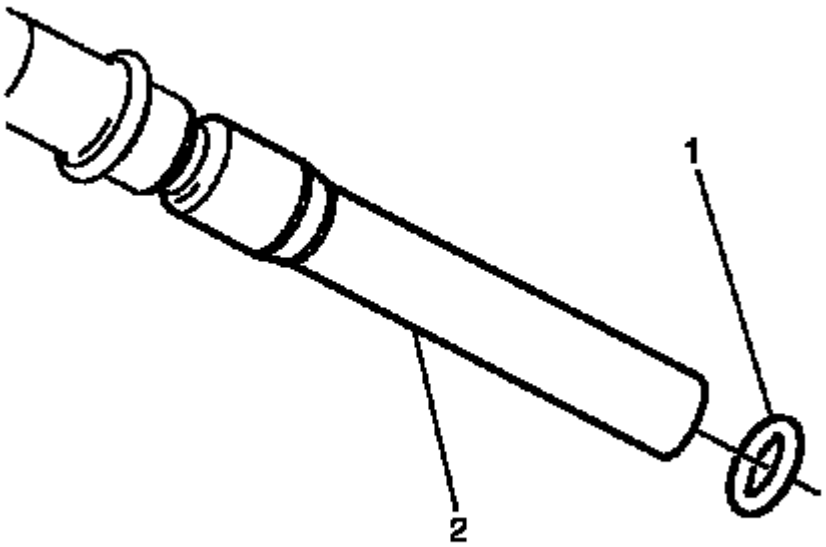

Fig. 48: Identifying Oil Level Indicator Tube & O-Ring
Courtesy of GENERAL MOTORS COMPANY

NOTE: The oil level indicator tube seal is a single use item.

5. Remove the O-ring (1) from the oil level indicator tube (2) and discard.

Installation Procedure

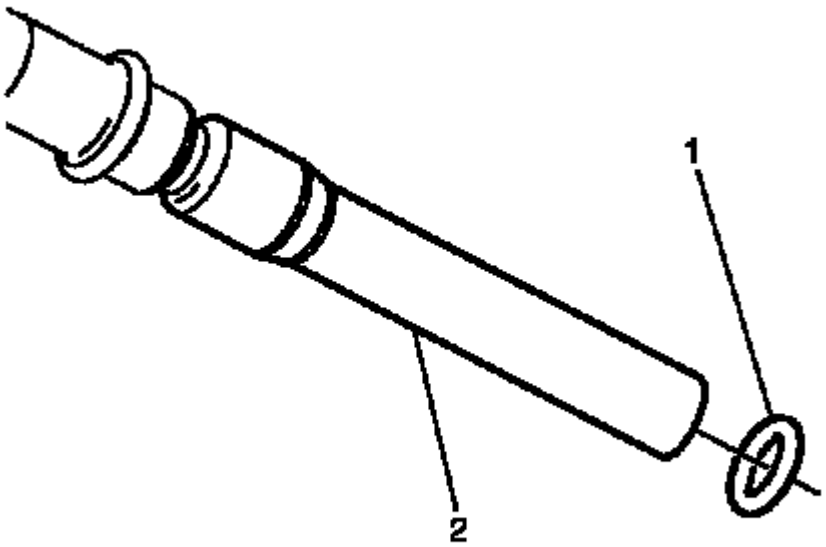

Fig. 49: Identifying Oil Level Indicator Tube & O-Ring
Courtesy of GENERAL MOTORS COMPANY

1. Install the O-ring (1) on the oil level indicator tube (2).

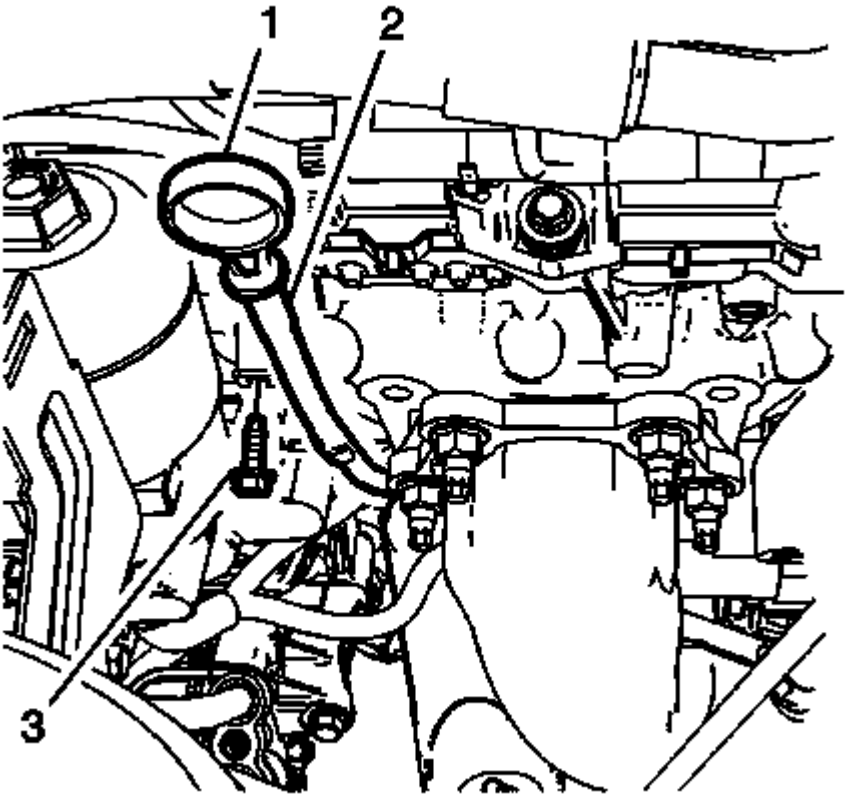

Fig. 50: Oil Level Indicator, Tube & Cylinder Head Retaining Bolt
Courtesy of GENERAL MOTORS COMPANY

NOTE: Apply suitable downward pressure to install the oil level indicator tube to the engine.

2. Install the oil level indicator tube (2) to the engine.

CAUTION: Refer to Fastener Caution .

3. Install the oil level indicator tube to cylinder head retaining bolt (3) and tighten to 9 N.m (80 lb in).
4. Install the oil level indicator (1) to the oil level indicator tube (2).

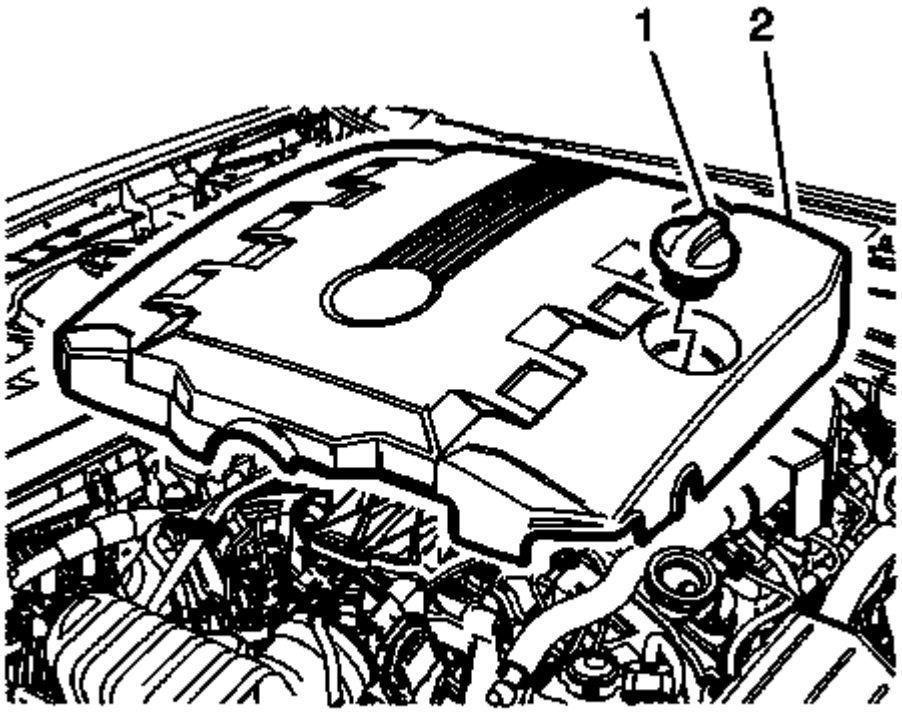

Fig. 51: Intake Manifold Cover & Cap
Courtesy of GENERAL MOTORS COMPANY

5. Install the intake manifold cover (2). Refer to **Intake Manifold Cover Replacement - Front**.

OIL FILTER ADAPTER REPLACEMENT

Removal Procedure

1. Disconnect the battery. Refer to **Battery Negative Cable Disconnection and Connection** .

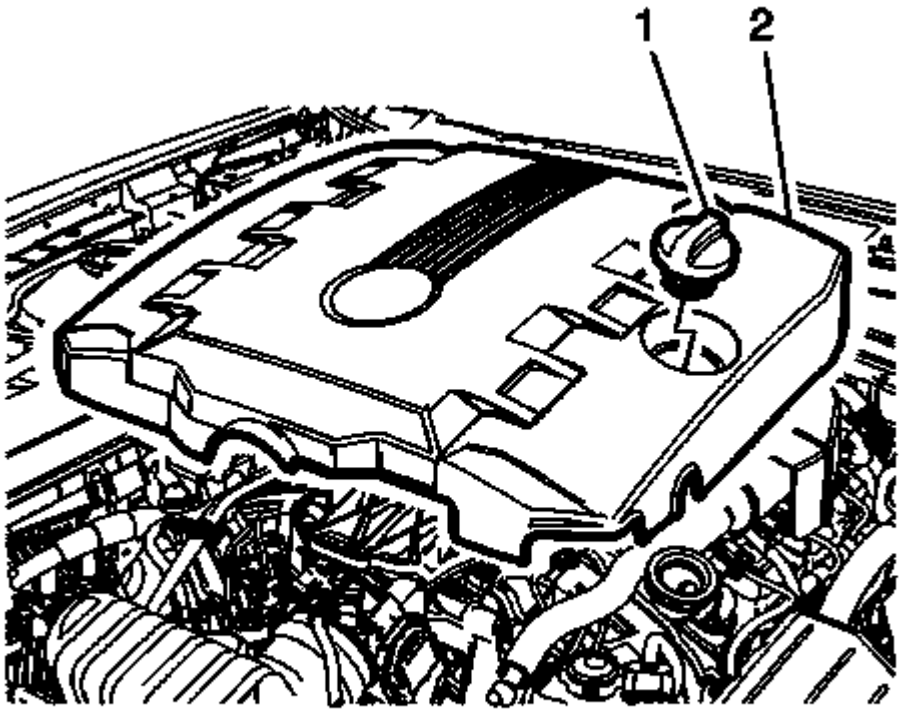

Fig. 52: Intake Manifold Cover & Cap
Courtesy of GENERAL MOTORS COMPANY

2. Remove the intake manifold cover (2). Refer to **Intake Manifold Cover Replacement - Front**.
3. Remove the oil filter and allow to drain. Refer to **Engine Oil and Oil Filter Replacement**.
4. Install the oil filter.

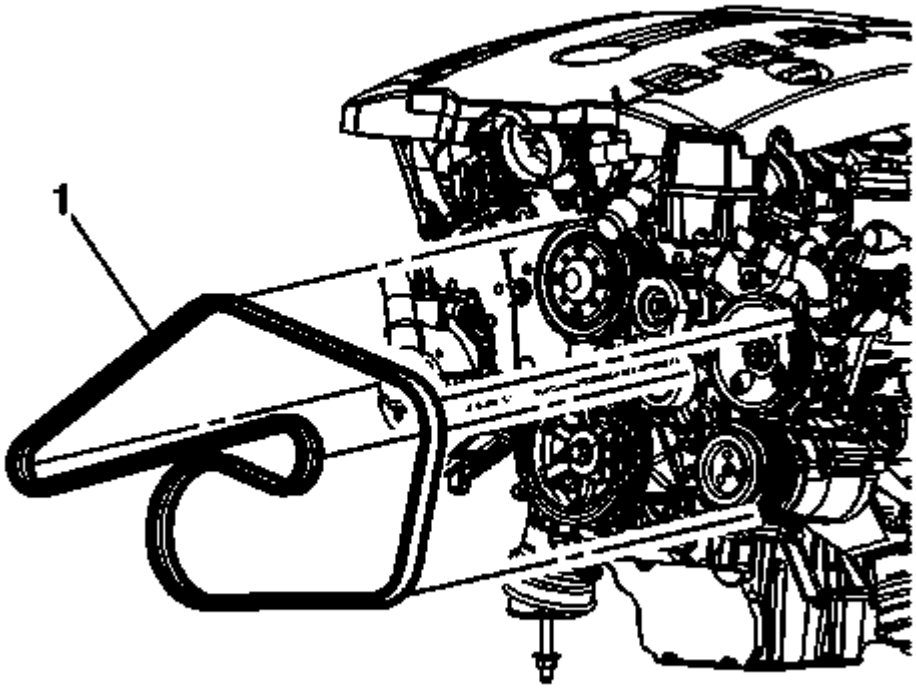

Fig. 53: Drive Belt
Courtesy of GENERAL MOTORS COMPANY

5. Remove the drive belt. Refer to **Drive Belt Replacement**.

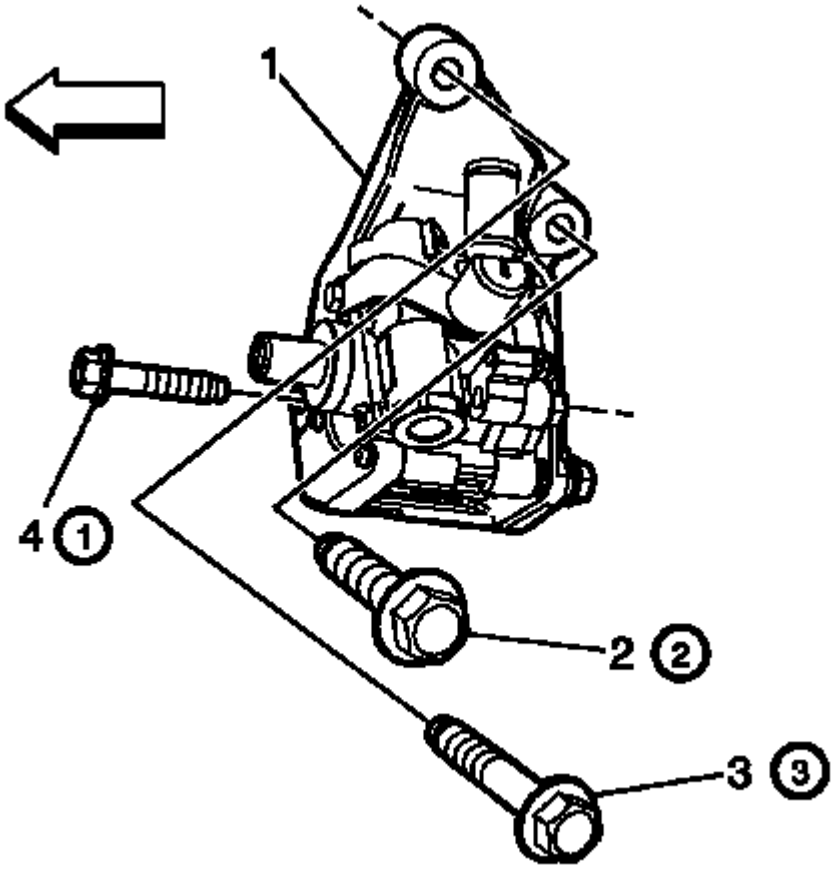

Fig. 54: Power Steering Pump Bracket & Bolt Tightening Sequence
Courtesy of GENERAL MOTORS COMPANY

NOTE: Do not disconnect the power steering lines from the power steering pump.

6. Remove the power steering pump and bracket (1). Refer to **Power Steering Pump Replacement** .

NOTE: Do not disconnect the A/C pipes from the A/C compressor.

7. Remove the A/C compressor bolts and reposition the A/C compressor in order to gain access to the oil filter adapter fasteners. Refer to **Air Conditioning Compressor Replacement (LFX)** .
8. Disconnect the oil pressure sensor electrical connector.

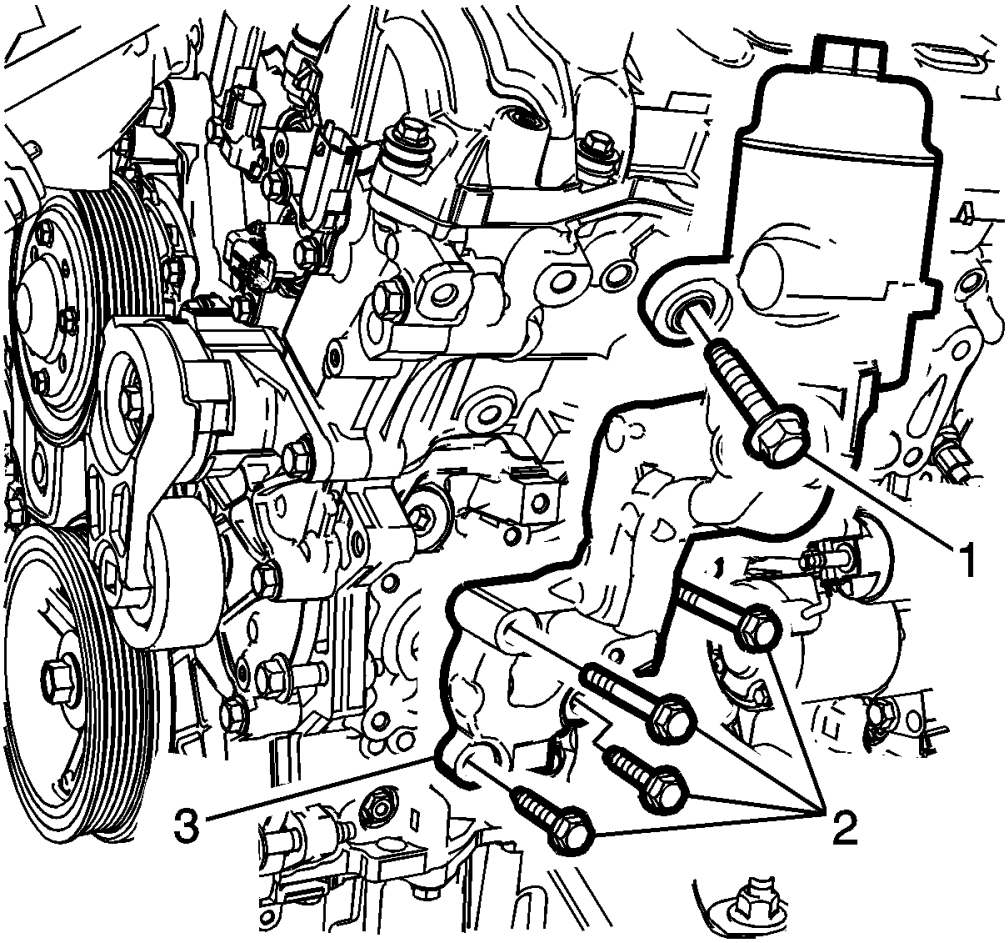

Fig. 55: Oil Filter Adapter & Bolts
Courtesy of GENERAL MOTORS COMPANY

9. Place a drain pan under the vehicle.
10. Remove the oil filter adapter bolts (1 and 2).
11. Remove the oil filter adapter (3).
12. Remove and discard the oil filter adapter gasket.

Installation Procedure

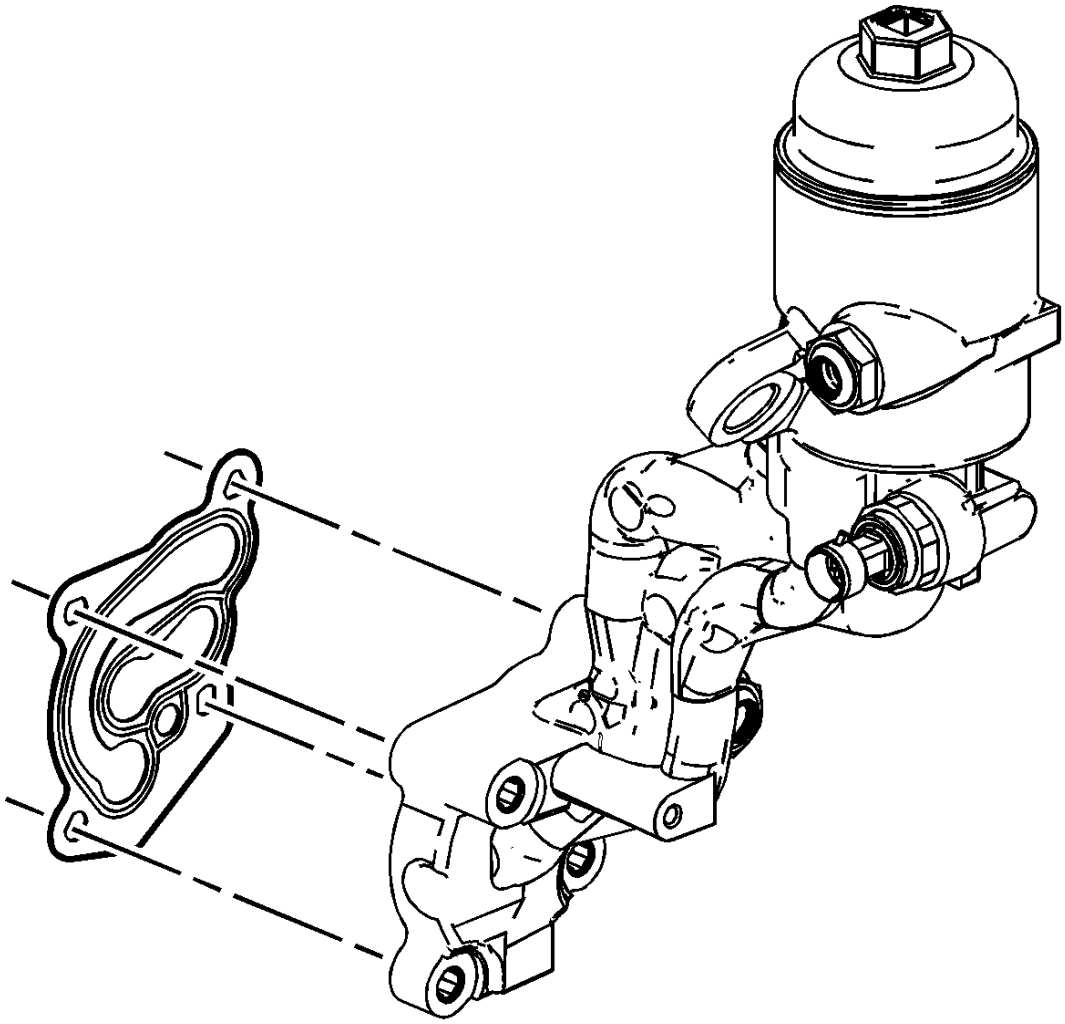

Fig. 56: View Of Oil Filter Adapter & Gasket
Courtesy of GENERAL MOTORS COMPANY

1. Position a NEW oil filter adapter gasket onto the oil filter adapter.

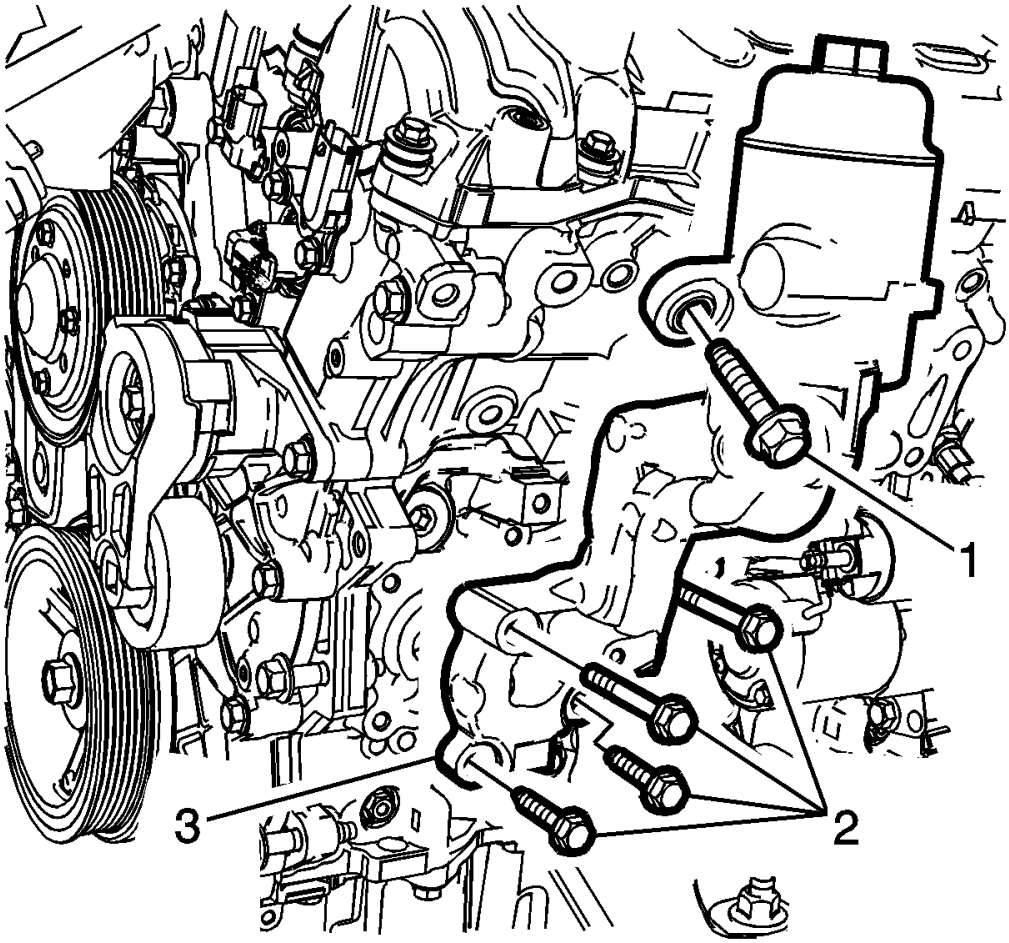

Fig. 57: Oil Filter Adapter & Bolts
Courtesy of GENERAL MOTORS COMPANY

2. Install the oil filter adapter (3).
3. Install the oil filter adapter bolts (1, 2) into the oil filter adapter and hand tighten.

CAUTION: Refer to Fastener Caution .

4. Tighten the oil filter adapter bolts (2) to 25 N.m (18 lb ft).
5. Tighten the oil filter adapter bolt (1) to 58 N.m (43 lb ft).
6. Connect the oil pressure sensor electrical connector.
7. Install the A/C compressor with the A/C pipes to the engine. Refer to **Air Conditioning Compressor Replacement (LFX)** .

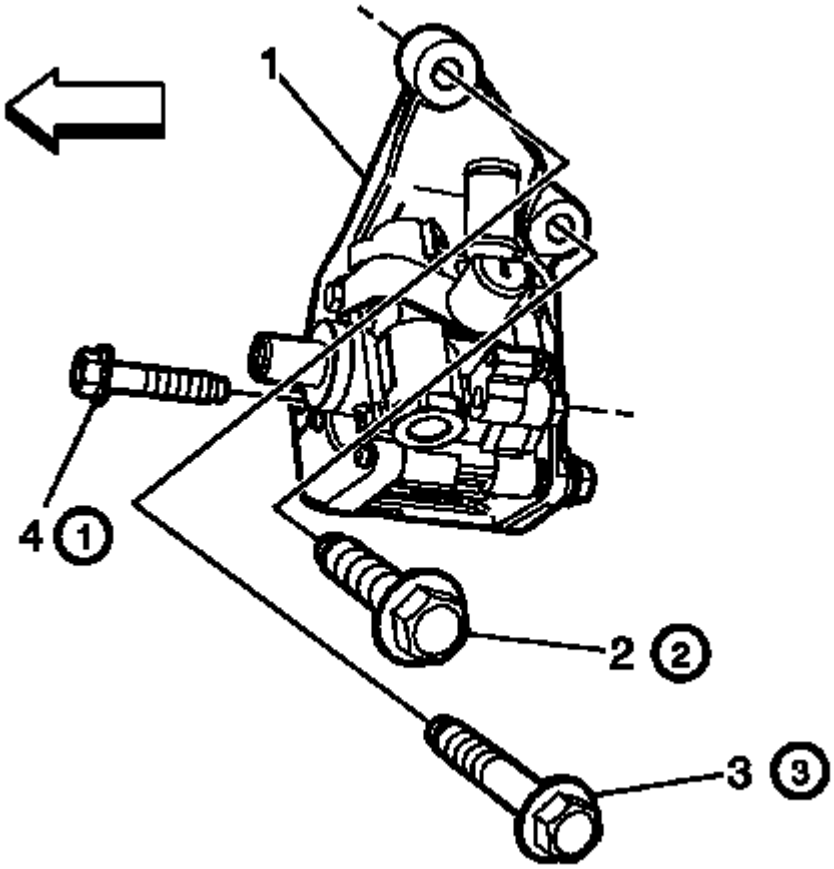

Fig. 58: Power Steering Pump Bracket & Bolt Tightening Sequence
Courtesy of GENERAL MOTORS COMPANY

8. Install the power steering pump and bracket (1). Refer to **Power Steering Pump Replacement** .

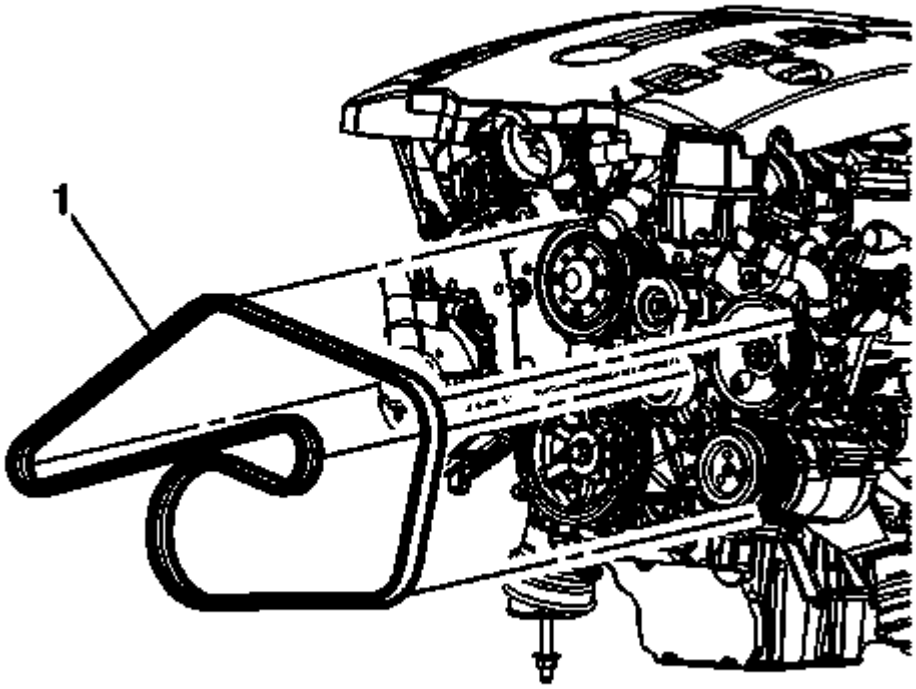

Fig. 59: Drive Belt
Courtesy of GENERAL MOTORS COMPANY

9. Install the drive belt. Refer to **Drive Belt Replacement**.

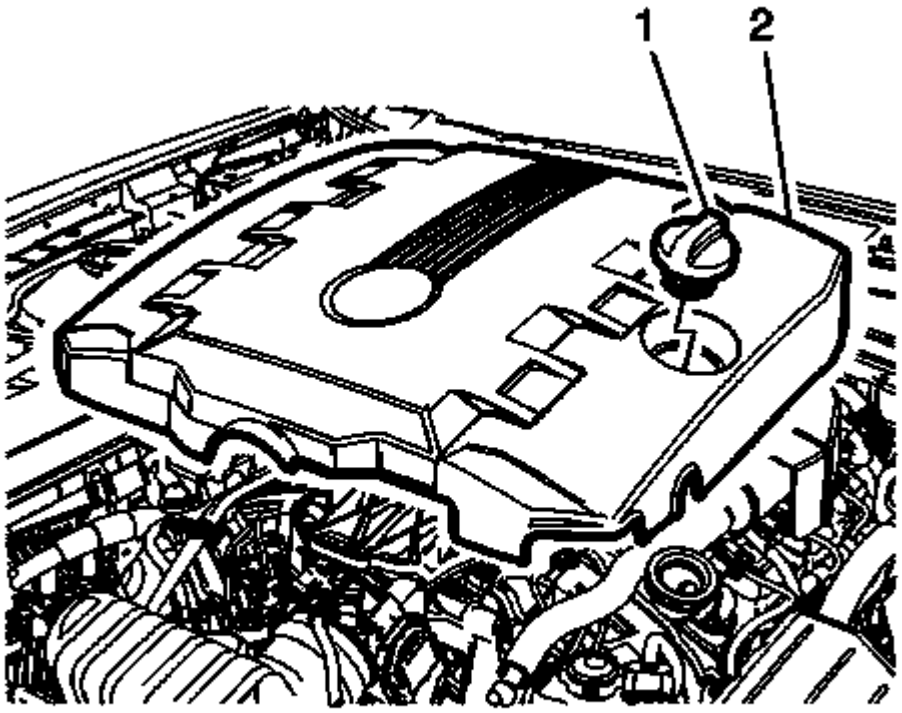

Fig. 60: Intake Manifold Cover & Cap
Courtesy of GENERAL MOTORS COMPANY

10. Install the intake manifold cover (2). Refer to **Intake Manifold Cover Replacement - Front**.
11. Connect the battery. Refer to **Battery Negative Cable Disconnection and Connection** .
12. Check and add engine oil as necessary.

CRANKSHAFT BALANCER REPLACEMENT

Special Tools

- **EN 38416-2** Crankshaft Button
- **EN 41816** Crankshaft Balancer Remover
- **EN 46106** Flywheel Holding Tool
- **EN 41998-B** Crankshaft Balancer Installer

For equivalent regional tools, refer to **Special Tools** .

Removal Procedure

1. Remove the drive belt. Refer to **Drive Belt Replacement**.

2. Raise and support the vehicle. Refer to **Lifting and Jacking the Vehicle** .
3. Remove the starter motor. Refer to **Starter Replacement (LFX)** .

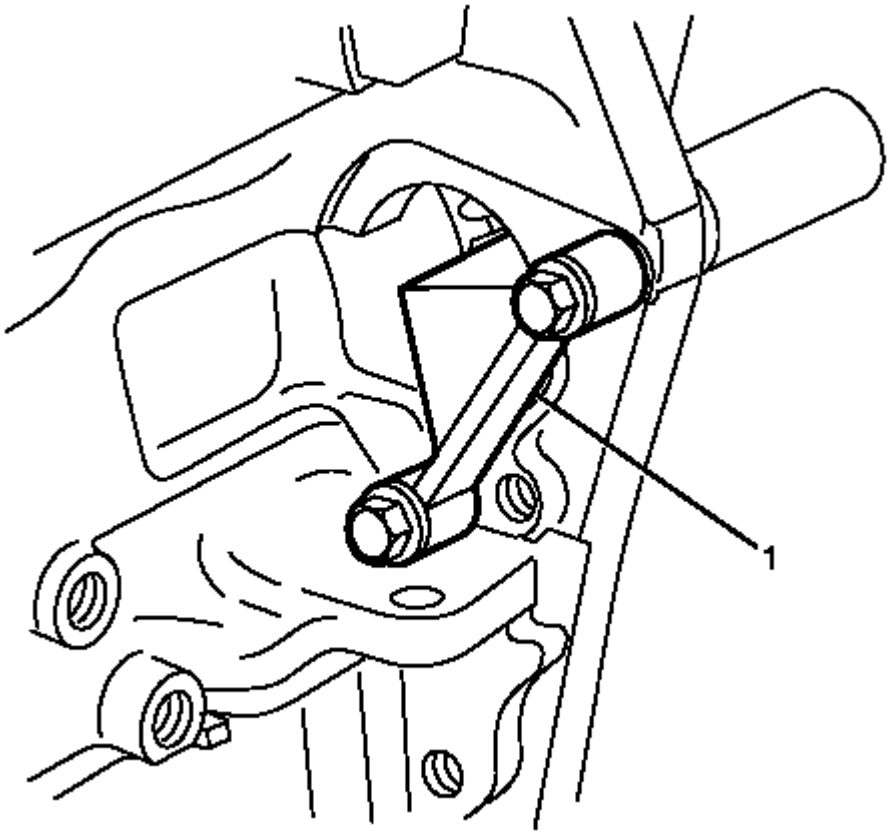

Fig. 61: View Of EN 46106
Courtesy of GENERAL MOTORS COMPANY

4. Install the **EN 46106** tool (1) through the starter mounting hole.
5. Lower the vehicle.

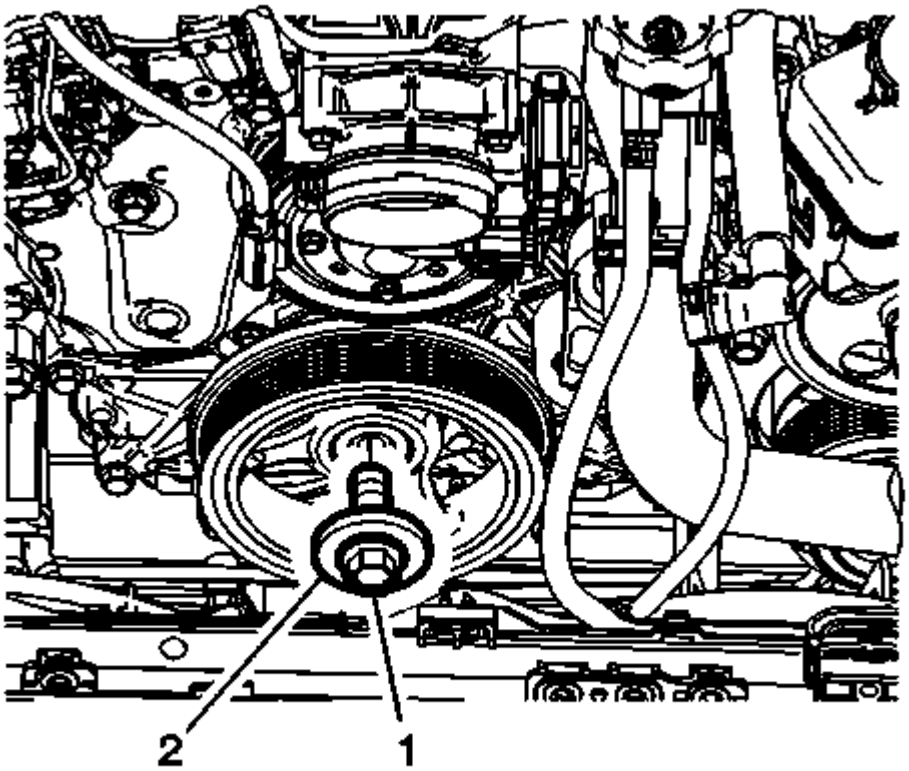

Fig. 62: Crankshaft Retaining Bolt & Washer
Courtesy of GENERAL MOTORS COMPANY

6. Remove and discard the crankshaft balancer to crankshaft retaining bolt (1) and washer (2).

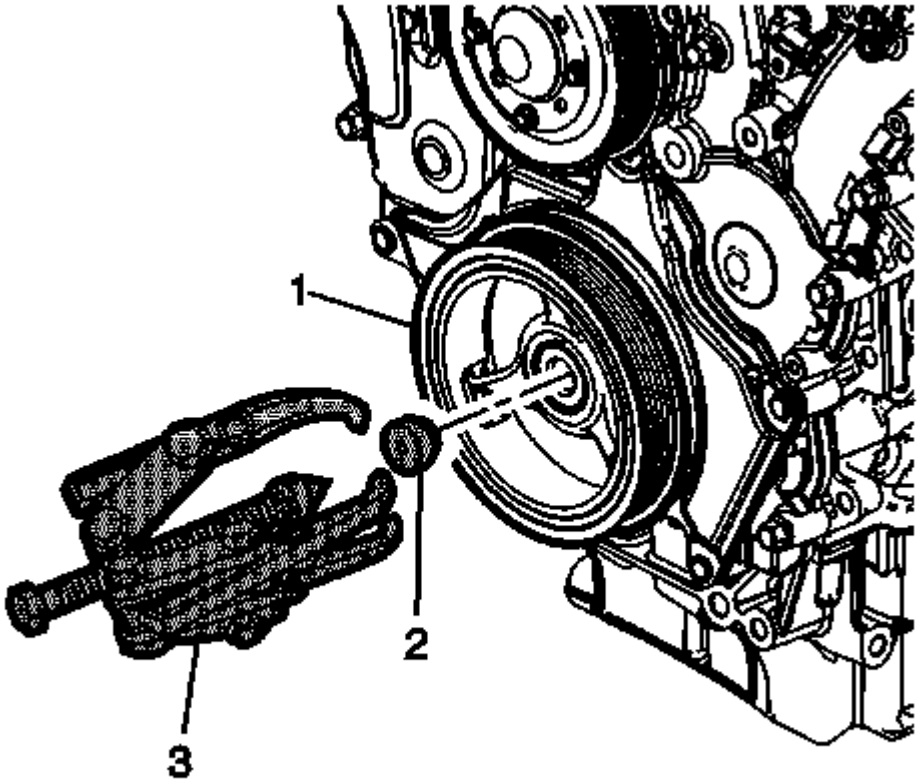

Fig. 63: Crankshaft Balancer And Removal Tools
Courtesy of GENERAL MOTORS COMPANY

7. Install the EN 38416-2 button (2) in the nose of the crankshaft.
8. Install the EN 41816 remover (3) in order to remove the crankshaft balancer (1).
9. Tighten the center bolt of the EN 41816 remover in order to pull the crankshaft balancer off of the crankshaft.
10. Remove the EN 41816 remover from the crankshaft balancer.

Installation Procedure

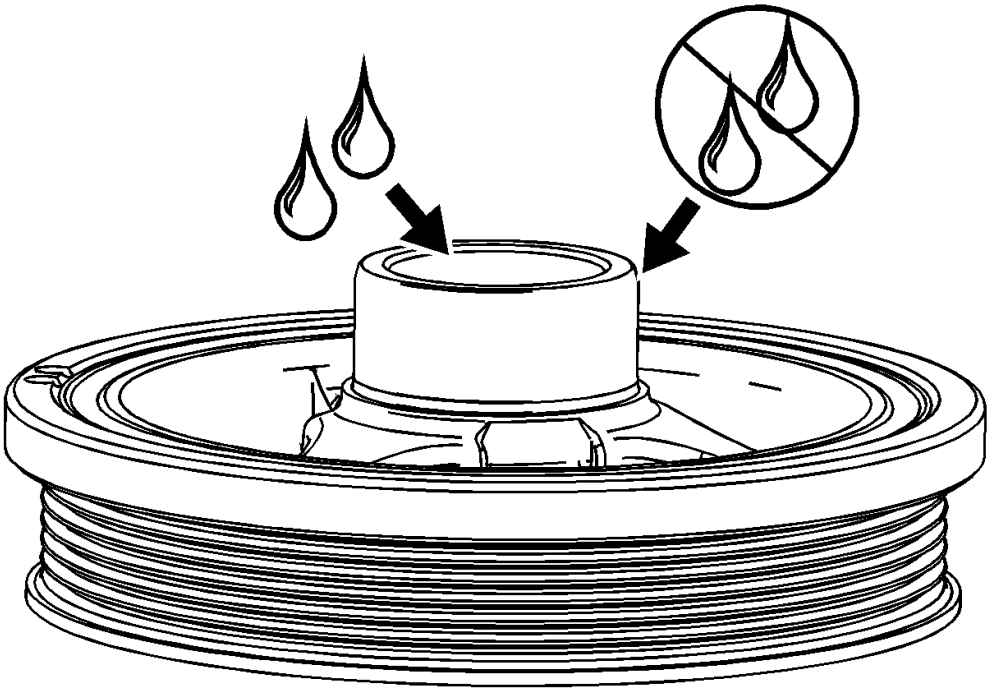

Fig. 64: Identifying Lubrication & Non-Lubrication Areas On Crankshaft Balancer
Courtesy of GENERAL MOTORS COMPANY

NOTE: **Do not lubricate the crankshaft front oil seal or crankshaft balancer sealing surfaces. The crankshaft balancer is installed into a dry seal.**

1. Apply lubricant to the inside of the crankshaft balancer hub bore.

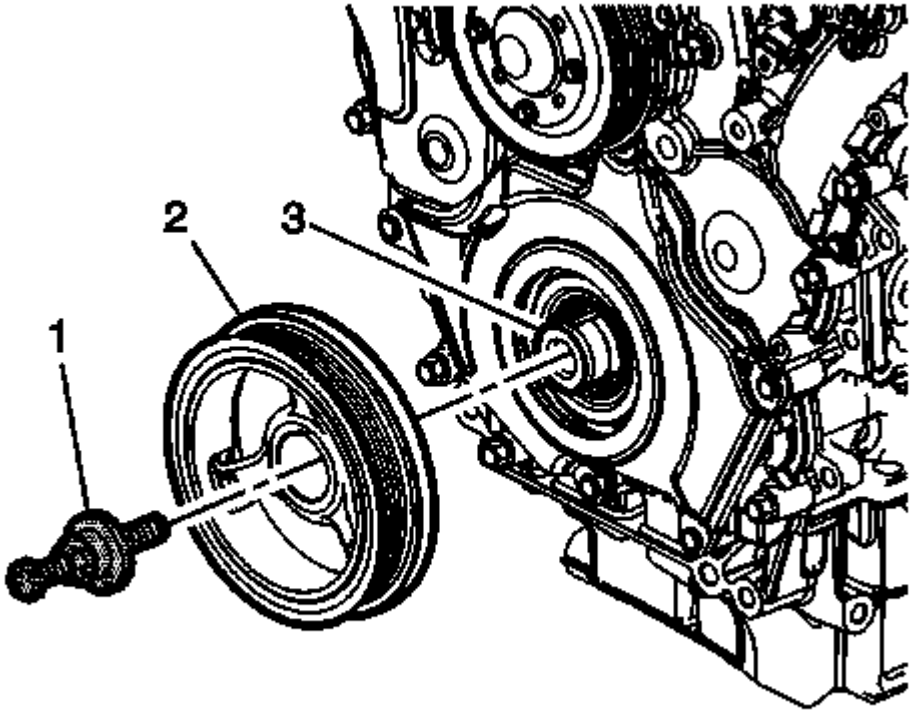

Fig. 65: Crankshaft, Balancer And Installer
Courtesy of GENERAL MOTORS COMPANY

2. Place the crankshaft balancer (2) in position on the crankshaft (3).
3. Thread the **EN 41998-B** installer (1) in the crankshaft. Ensure you engage at least 10 threads of the **EN 41998-B** installer before pressing the crankshaft balancer in place.
4. Push the crankshaft balancer into position by tightening the nut on the **J 41998-B** installer until the large washer bottoms out on the crankshaft end.
5. Remove the **EN 41998-B** installer.

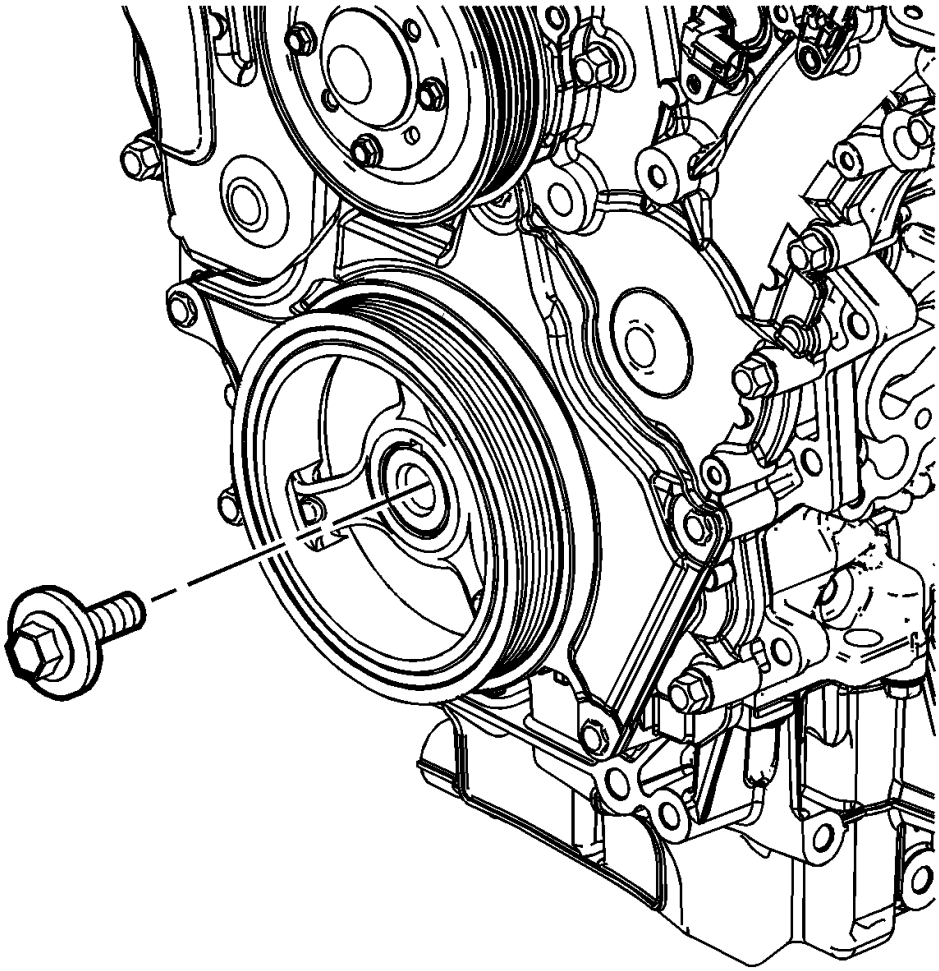

Fig. 66: View Of Crankshaft Balancer Bolt
Courtesy of GENERAL MOTORS COMPANY

6. Install the NEW crankshaft balancer bolt (1) and washer.

CAUTION: Refer to Fastener Caution .

7. Tighten the crankshaft balancer bolt.
    1. Tighten the crankshaft balancer bolt to 100 (74 lb ft).
    2. Tighten the crankshaft balancer bolt an additional 150 degrees using the **EN 45059** meter.
8. Raise the vehicle.

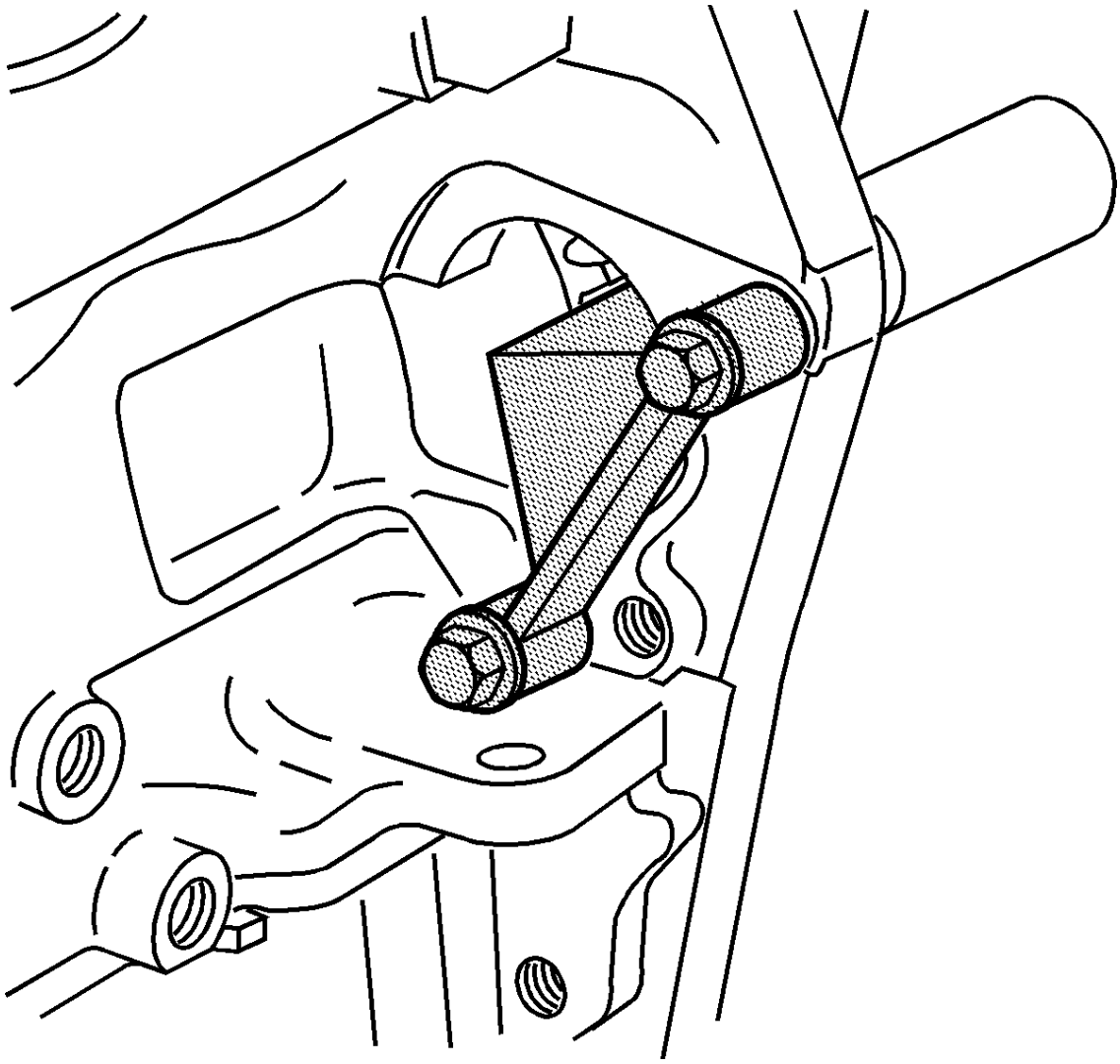

Fig. 67: Flywheel Holding Tool
Courtesy of GENERAL MOTORS COMPANY

9. Remove the **EN 46106** tool.
10. Install the starter motor. Refer to **Starter Replacement (LFX)** .
11. Lower the vehicle.
12. Install the drive belt. Refer to **Drive Belt Replacement**.

CRANKSHAFT FRONT OIL SEAL REPLACEMENT

Special Tools

J 29184 Oil Seal Installer

Removal Procedure

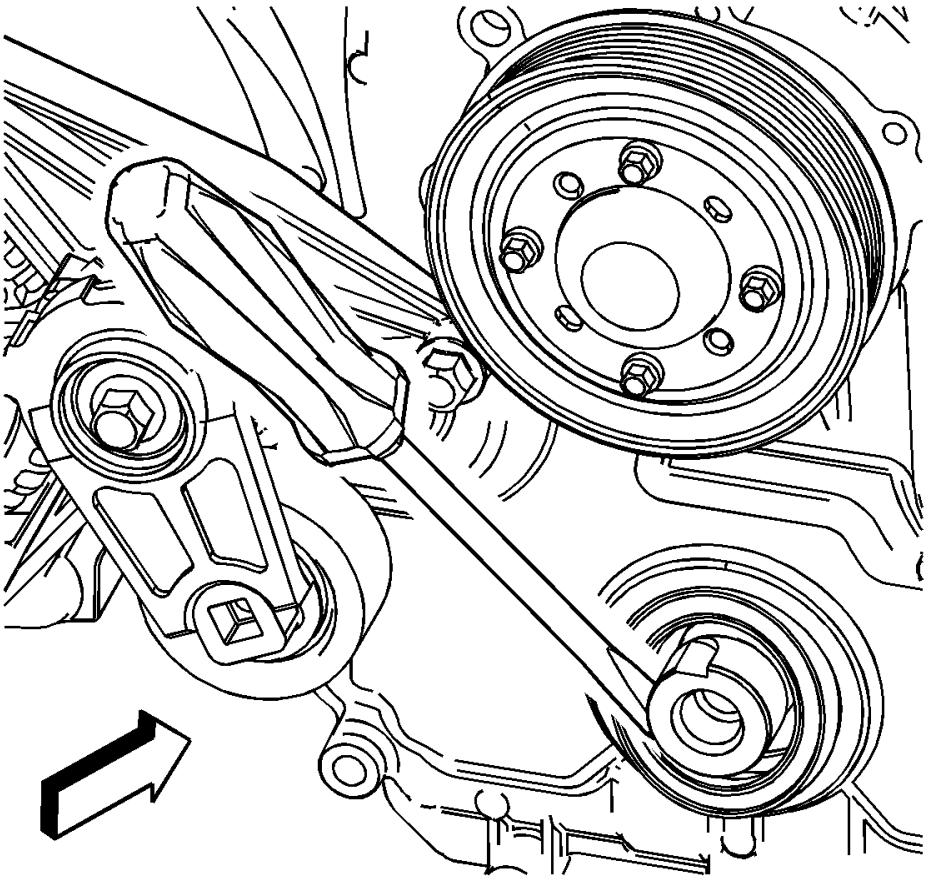

Fig. 68: Removing Crankshaft Front Oil Seal
Courtesy of GENERAL MOTORS COMPANY

1. Remove the crankshaft balancer. Refer to **Crankshaft Balancer Replacement**.
2. Use a flat-bladed tool in order to remove the crankshaft oil seal.

Installation Procedure

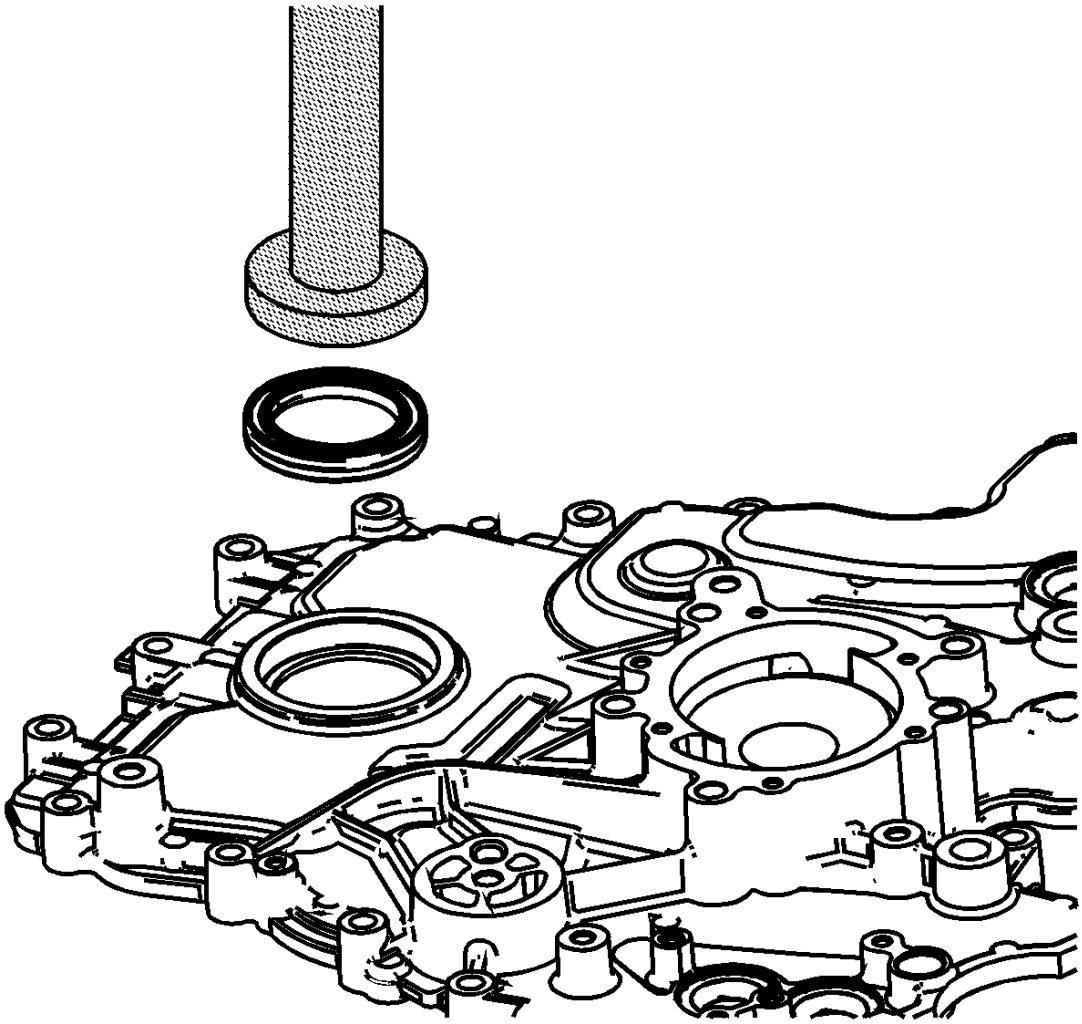

Fig. 69: View of Crankshaft Front Oil Seal Assembly
Courtesy of GENERAL MOTORS COMPANY

NOTE: Do not lubricate the crankshaft front oil seal or the crankshaft balancer sealing surfaces.

1. Use the **J 29184** oil seal installer or equivalent to install the crankshaft front oil seal.
2. Install the crankshaft balancer. Refer to **Crankshaft Balancer Replacement**.

CAMSHAFT COVER REPLACEMENT - LEFT SIDE

Special Tools

EN 46101 Spark Plug Tube Seal Guide

Removal Procedure

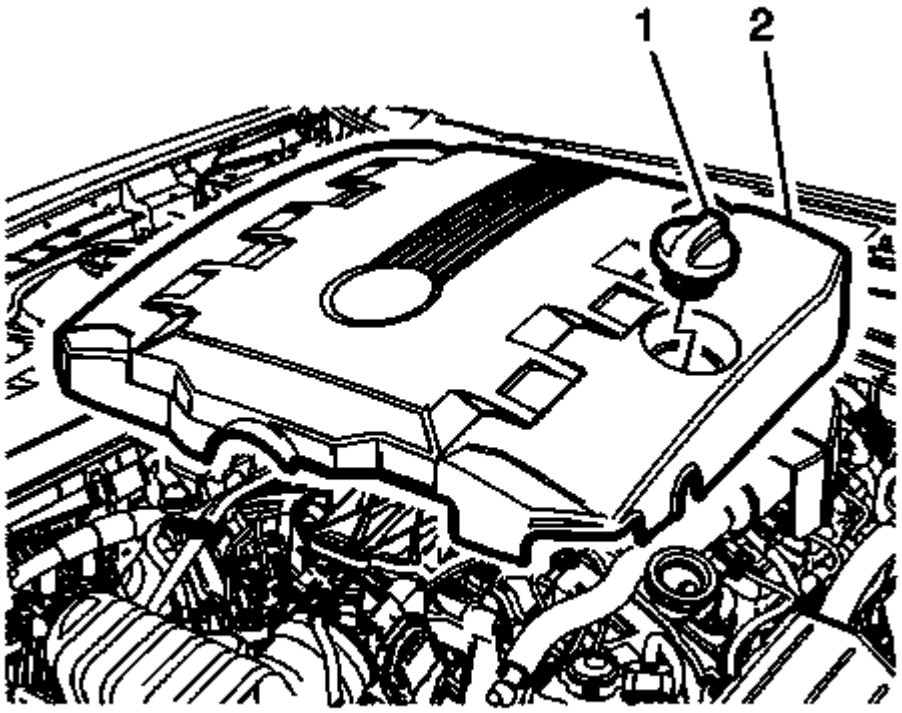

Fig. 70: Intake Manifold Cover & Cap
Courtesy of GENERAL MOTORS COMPANY

1. Remove the intake manifold cover (2). Refer to **Intake Manifold Cover Replacement - Front**.

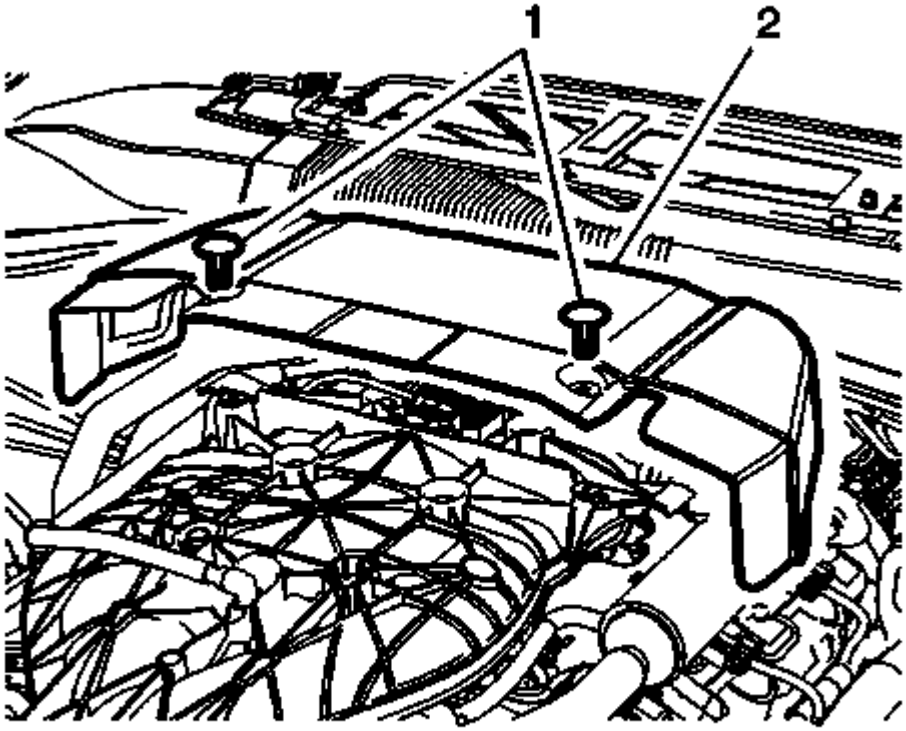

Fig. 71: Rear Intake Manifold Cover & Retainers
Courtesy of GENERAL MOTORS COMPANY

2. Remove the rear intake manifold cover retainers (1).
3. Remove the rear intake manifold cover (2).

WARNING: Refer to Battery Disconnect Warning .

4. Disconnect the battery ground cable from the battery. Refer to **Battery Negative Cable Disconnection and Connection** .
5. Remove the positive crankcase ventilation tubes. Refer to **Positive Crankcase Ventilation Hose/Pipe/Tube Replacement**.

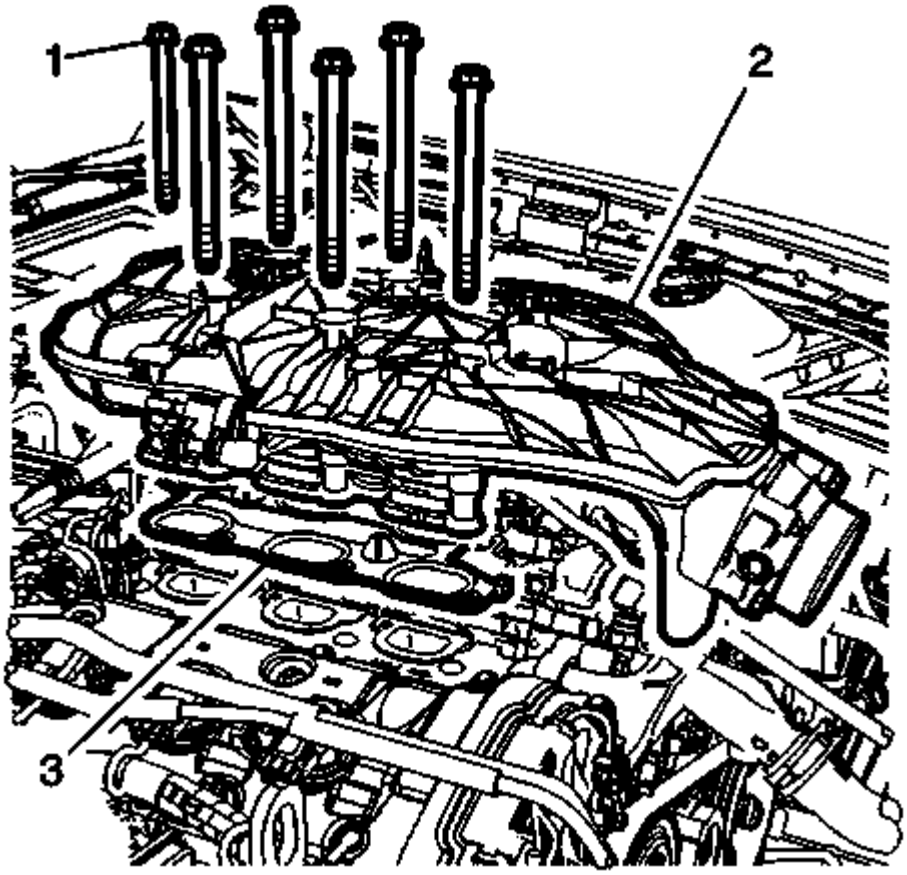

Fig. 72: Intake Manifold, Bolts & Gasket
Courtesy of GENERAL MOTORS COMPANY

6. Remove the intake manifold (2). Refer to **Intake Manifold Removal (LFX)** .

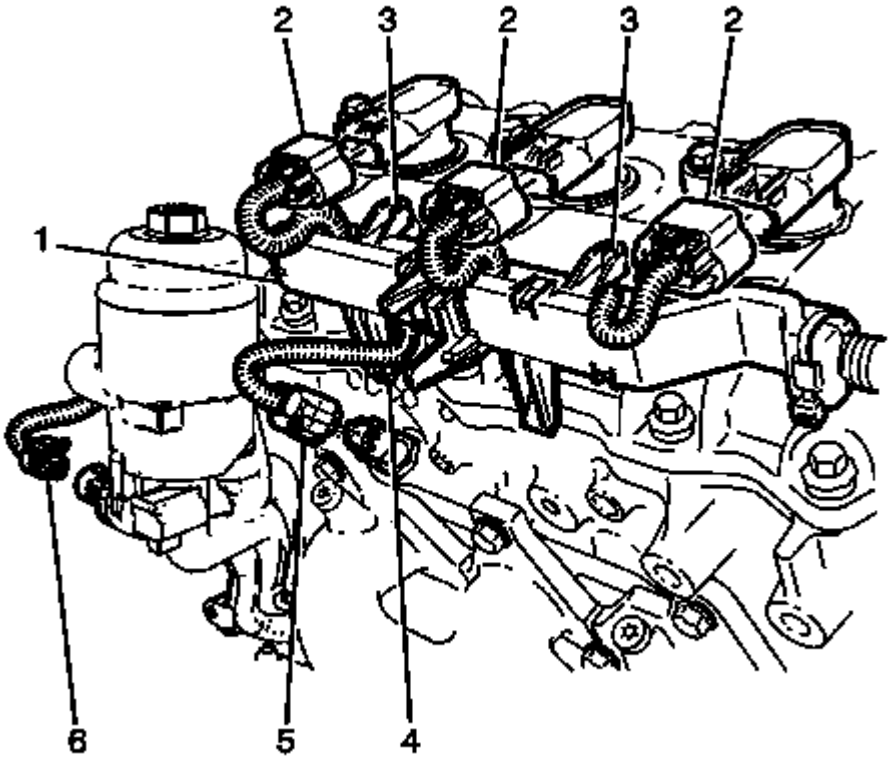

Fig. 73: Ignition Coil Electrical Connectors & Wiring Harness
Courtesy of GENERAL MOTORS COMPANY

NOTE:

- **Unlock the ignition coil electrical connectors before disconnecting from the ignition coils.**
- **Do not damage the ignition coil electrical connectors.**

7. Disconnect the ignition coil electrical connectors (2) from the ignition coils.

NOTE: **Use a suitable tool to detach the wiring harness (1) from the camshaft cover retainers (4) and lift the wiring harness (1) upward to detach the wiring harness from the camshaft cover lugs (3).**

8. Detach the engine wiring harness (1) from the left bank camshaft cover.
9. Reposition and secure the wiring harness (1) away from the camshaft cover in order to provide clearance for removal of the camshaft cover.

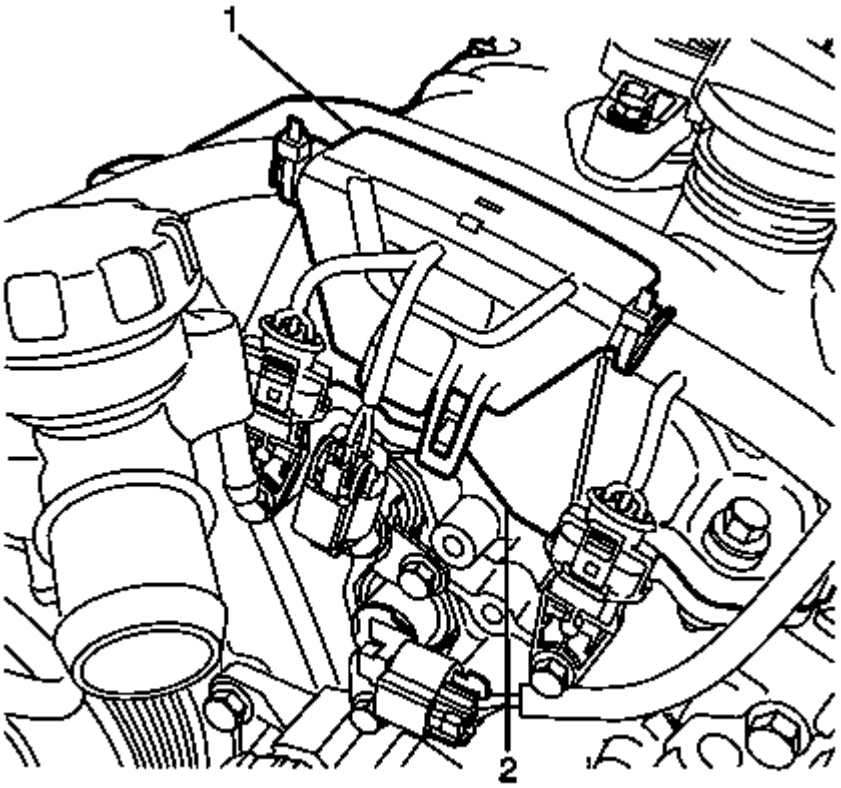

Fig. 74: View Of Wiring Harness & Camshaft Cover
Courtesy of GENERAL MOTORS COMPANY

NOTE:

- **Do not disconnect the engine front cover electrical connectors.**
- **Use a suitable tool to detach the wiring harness (1) from the camshaft cover (2) and lift the wiring harness (1) upwards to detach the wiring harness from the camshaft cover (2).**

10. Remove the wiring harness (1) from the front of the camshaft cover (2).
11. Reposition and secure the wiring harness (1) away from the camshaft cover (2) in order to provide clearance for removal of the camshaft cover (2).

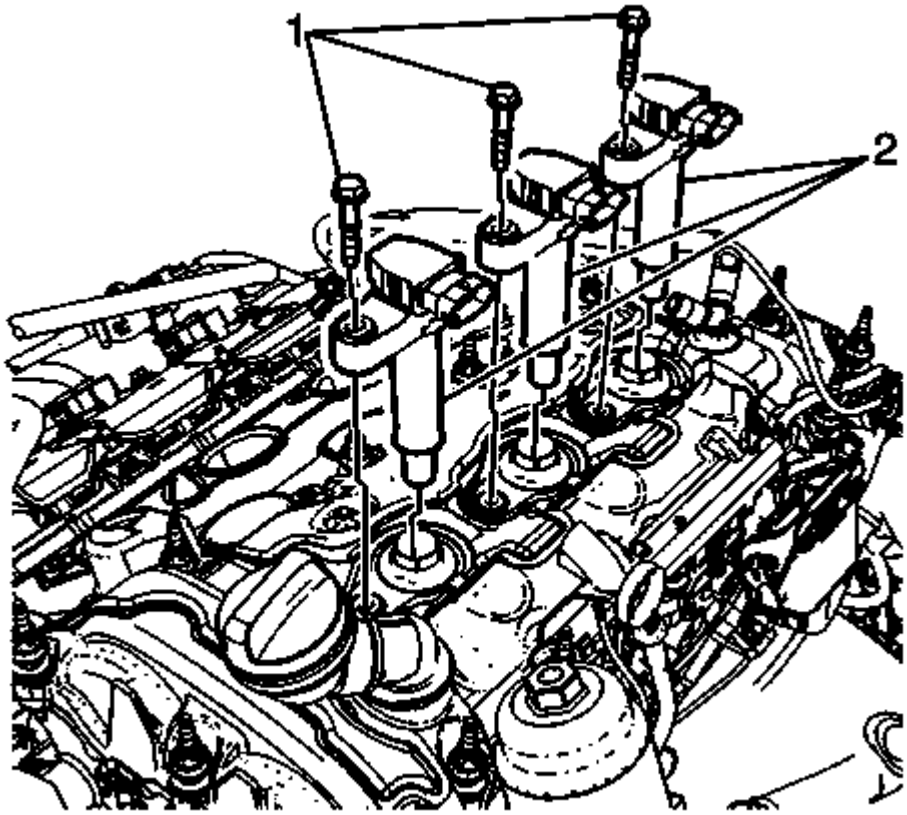

Fig. 75: Identifying Ignition Coils & Bolts
Courtesy of GENERAL MOTORS COMPANY

12. Remove the ignition coil to camshaft cover retaining bolts (1).
13. Remove the ignition coils (2) from the camshaft cover.

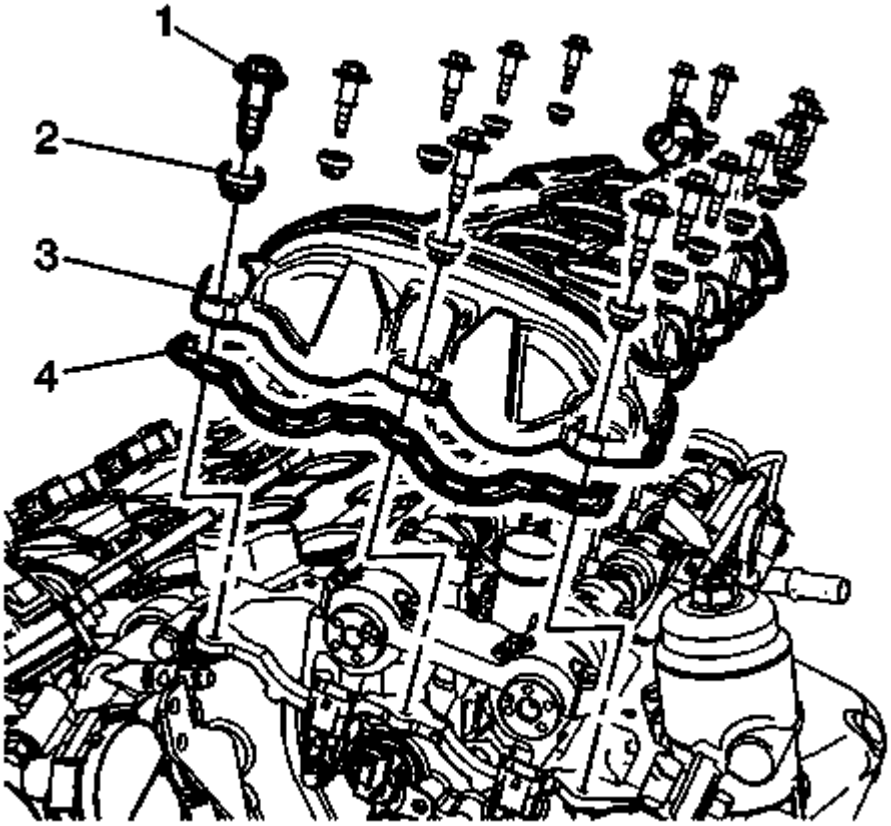

Fig. 76: Camshaft Cover, Gasket & Retaining Bolts
Courtesy of GENERAL MOTORS COMPANY

14. Remove the camshaft cover retaining bolts (1).
15. Remove the camshaft cover from the engine (3).
16. Remove and discard the camshaft cover seal (4) and bolt grommets (2).

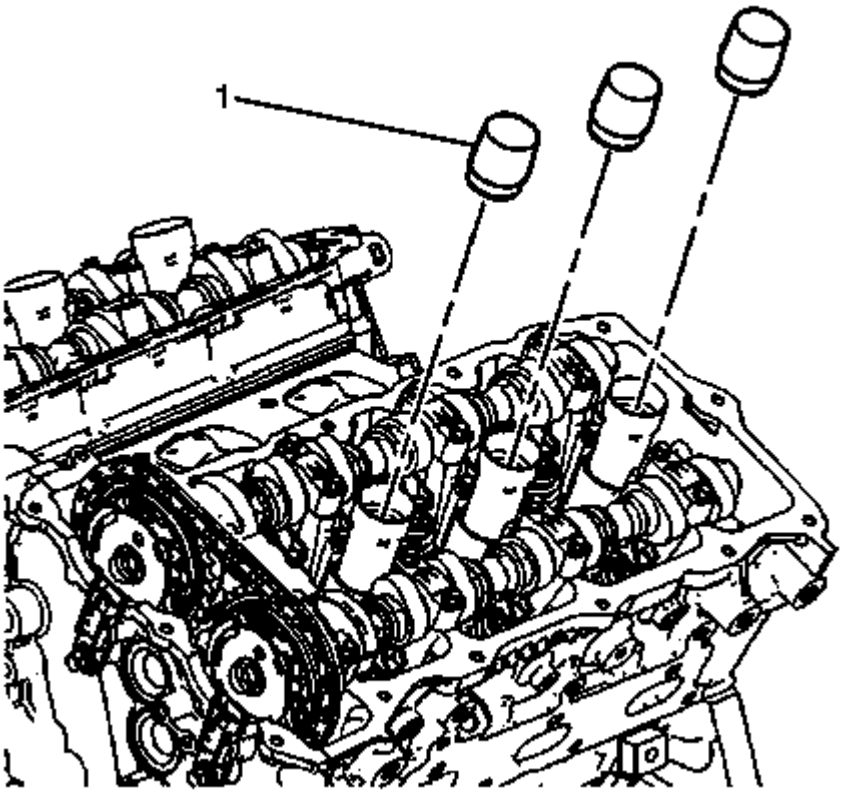

Fig. 77: Spark Plug Tube Seal Guide
Courtesy of GENERAL MOTORS COMPANY

17. Install the spark plug tube plugs **EN 46101** spark plug tube seal guide (1) to the spark plug tubes to prevent dirt and other contaminants from entering into the cylinders.

Installation Procedure

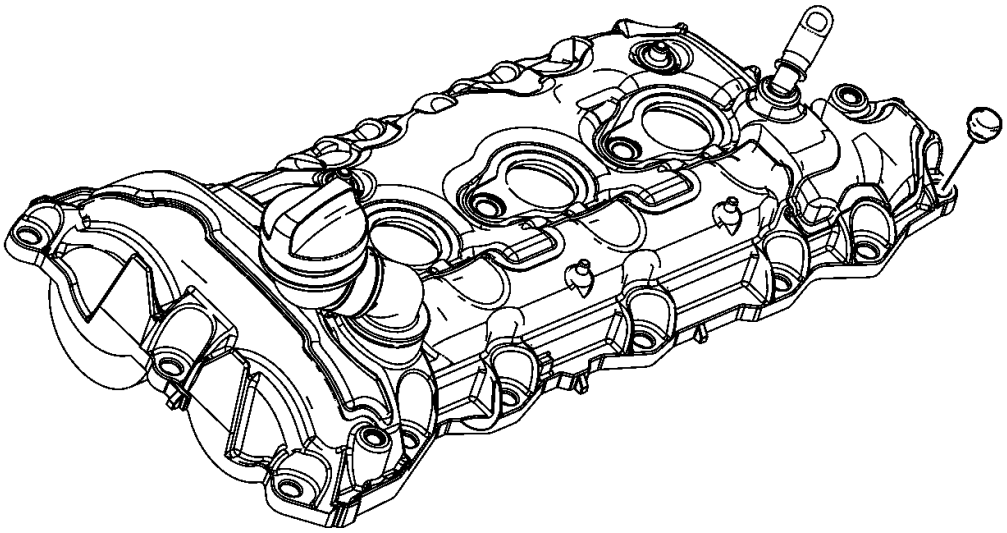

Fig. 78: View of Camshaft Cover
Courtesy of GENERAL MOTORS COMPANY

1. Install a NEW camshaft cover seal and NEW bolt grommets.
2. Wipe the camshaft cover sealing surface on the left cylinder head with a clean, lint-free cloth.

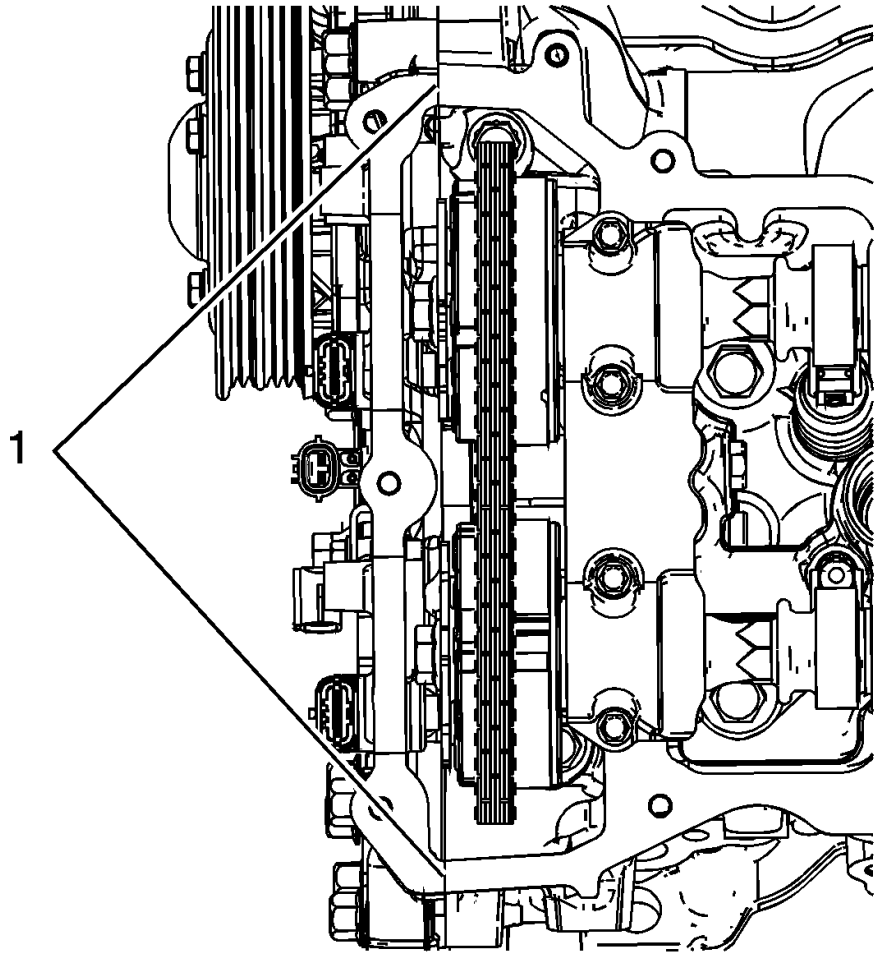

Fig. 79: Locating Engine Front Cover Split Lines
Courtesy of GENERAL MOTORS COMPANY

3. Place a bead 8 mm (0.3150 in) in diameter by 4 mm (0.1575 in) in height of RTV sealant on the engine front cover split lines (1). Refer to **Adhesives, Fluids, Lubricants, and Sealers** , **Adhesives, Fluids, Lubricants, and Sealers (Korea)** for recommended sealant.

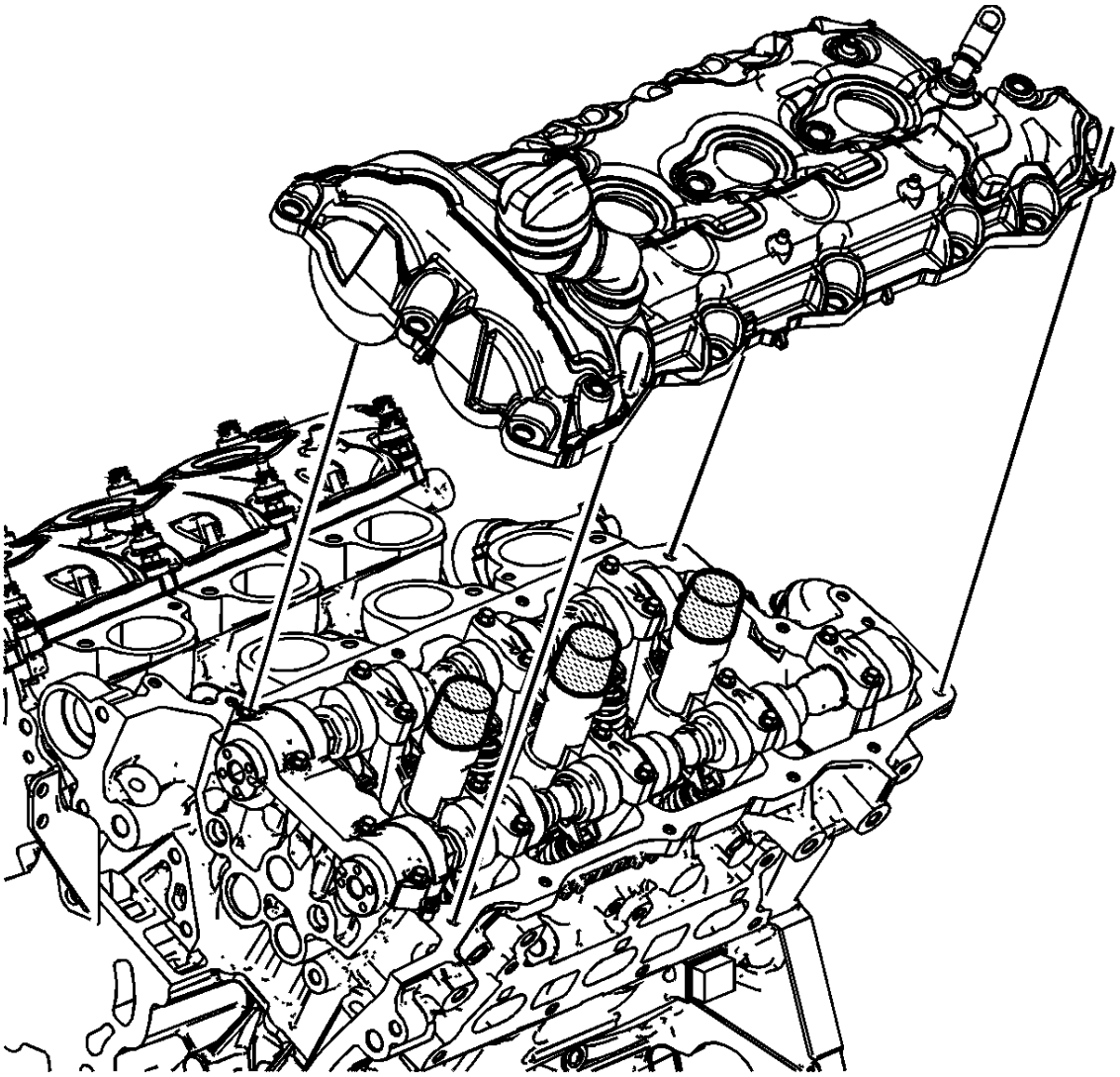

Fig. 80: View of Camshaft Cover & Cylinder Head
Courtesy of GENERAL MOTORS COMPANY

4. Place the left camshaft cover into position onto the left cylinder head.

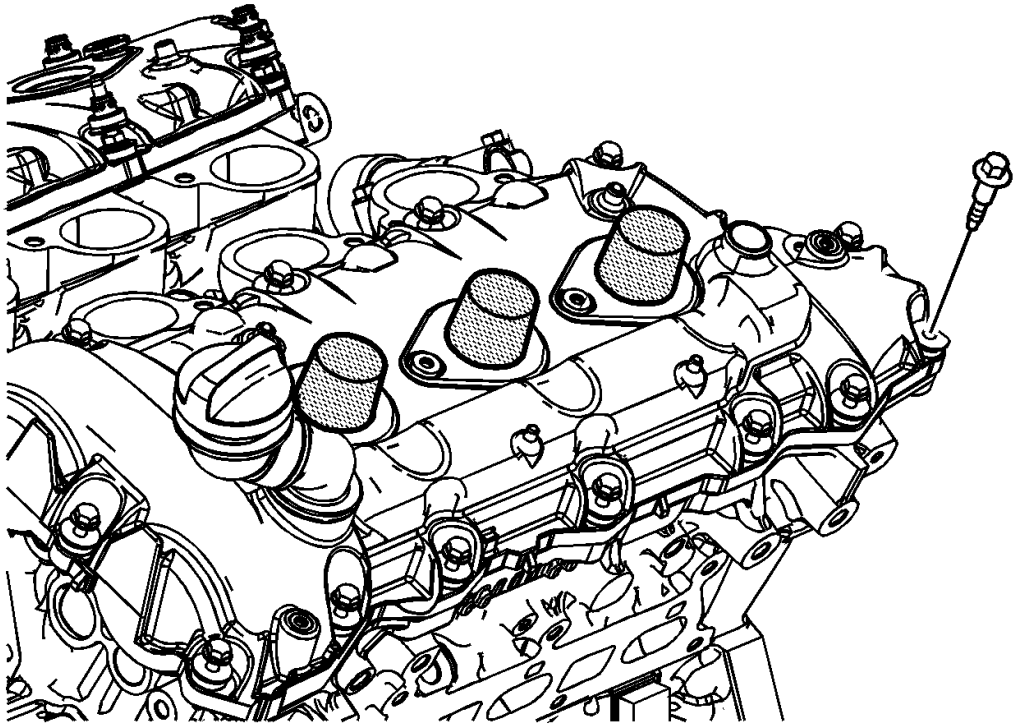

Fig. 81: View of Camshaft Cover & Bolts
Courtesy of GENERAL MOTORS COMPANY

5. Loosely install the left camshaft cover bolts.

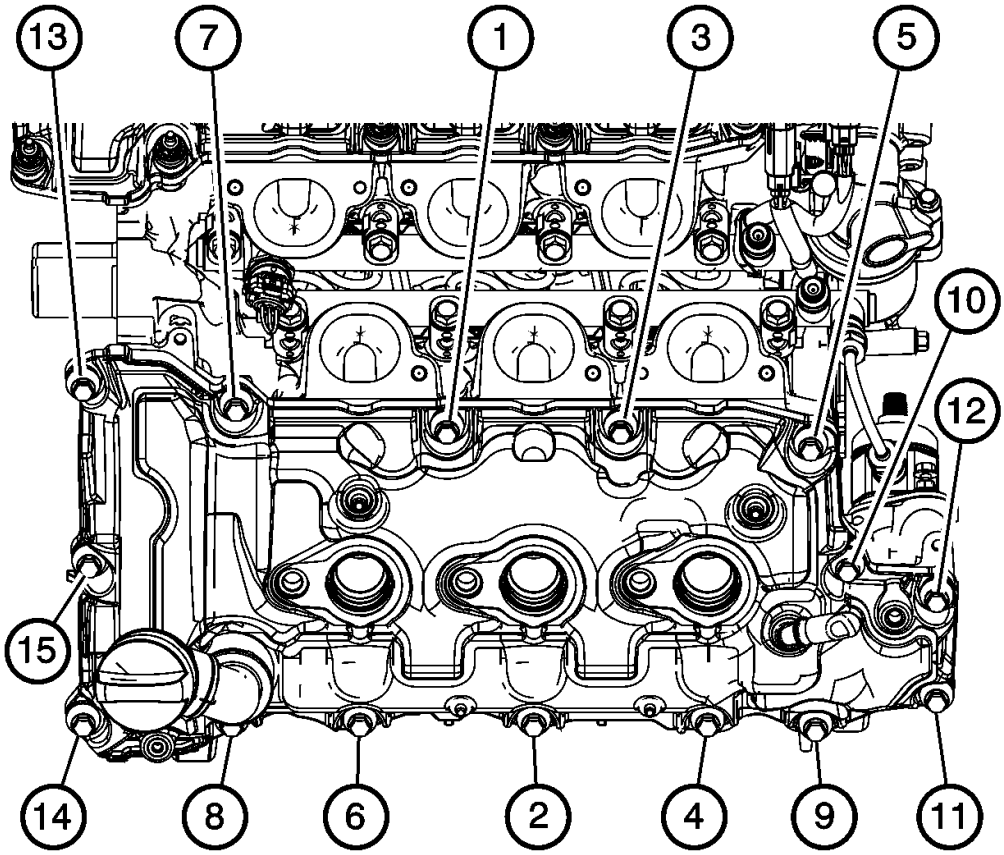

Fig. 82: Identifying Left Camshaft Cover Bolt Tightening Sequence
Courtesy of GENERAL MOTORS COMPANY

CAUTION: Refer to Fastener Caution

6. Tighten the left camshaft cover bolts in the sequence shown.
    1. Tighten the left camshaft cover bolts in the sequence to 10 (89 lb in).
    2. Tighten the left camshaft cover bolts a second pass in the sequence to 10 (89 lb in).

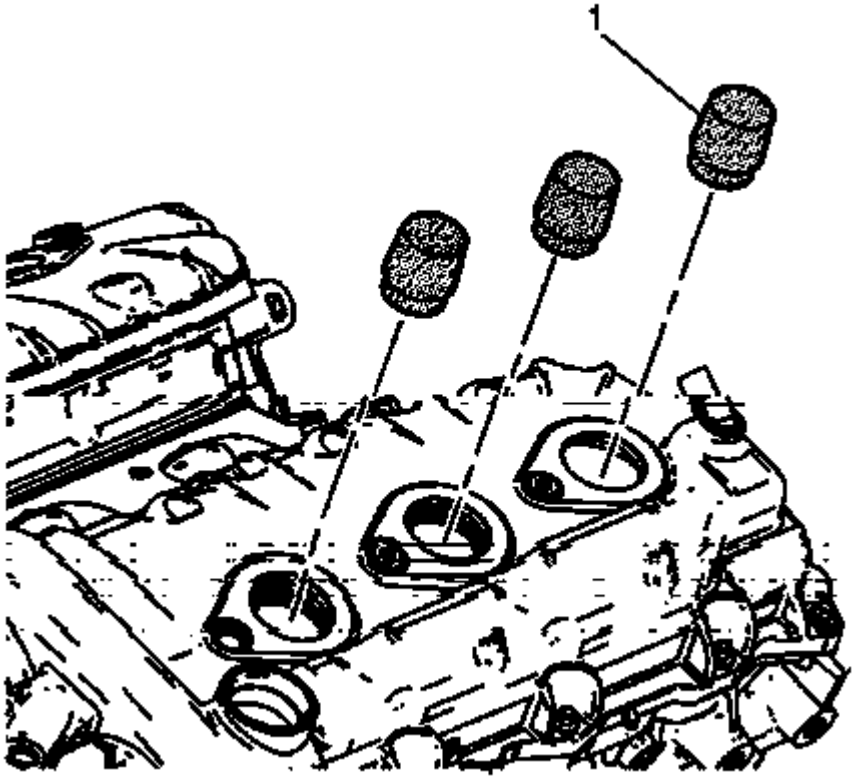

Fig. 83: Spark Plug Tube Seal Guide
Courtesy of GENERAL MOTORS COMPANY

7. Remove the **EN 46101** spark plug tube seal guide (1) from the spark plug tubes of the left cylinder head.

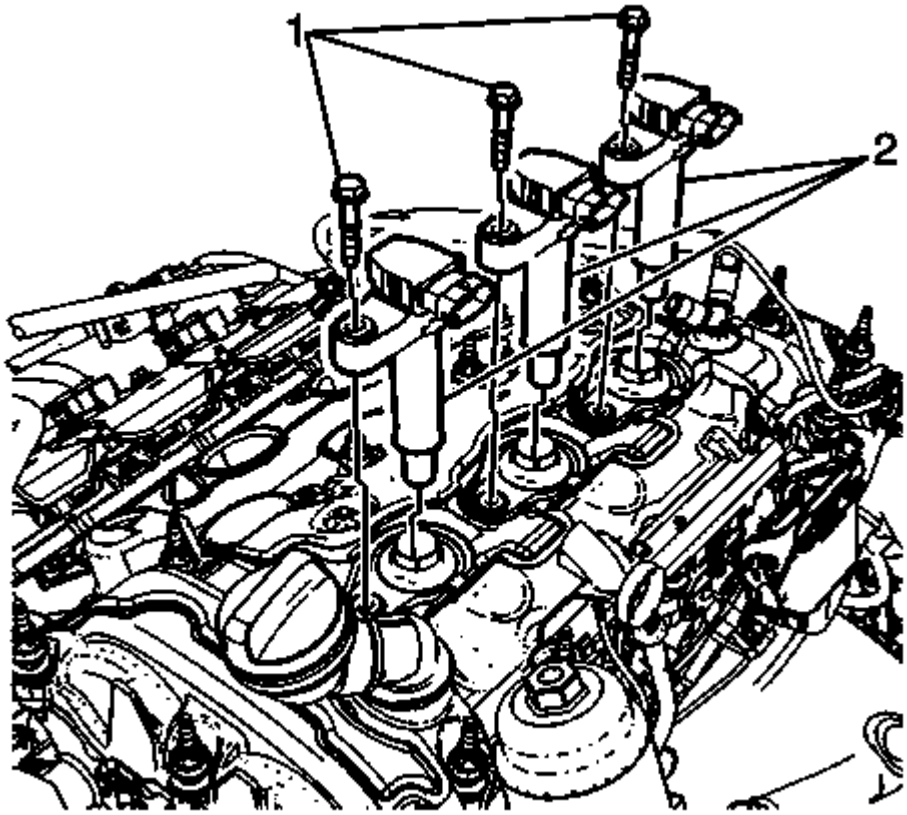

Fig. 84: Identifying Ignition Coils & Bolts
Courtesy of GENERAL MOTORS COMPANY

8. Install the ignition coils (2) to the camshaft cover.
9. Install the ignition coil to camshaft cover retaining bolts (1) and tighten to 10 (89 lb in).

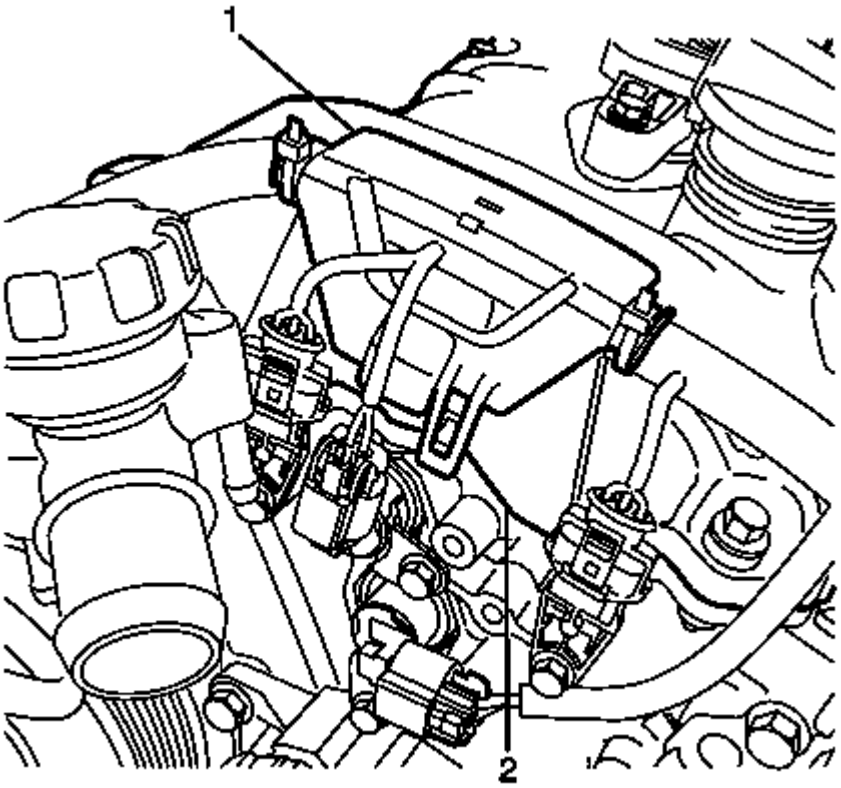

Fig. 85: View Of Wiring Harness & Camshaft Cover
Courtesy of GENERAL MOTORS COMPANY

NOTE:

- **Ensure the wiring harness (1) is located on the locating lugs of the camshaft cover (2).**
- **Listen for an audible click to confirm the correct installation of the wiring harness (1) to the camshaft cover (2).**

10. Install the wiring harness (1) to the front of the camshaft cover (2).

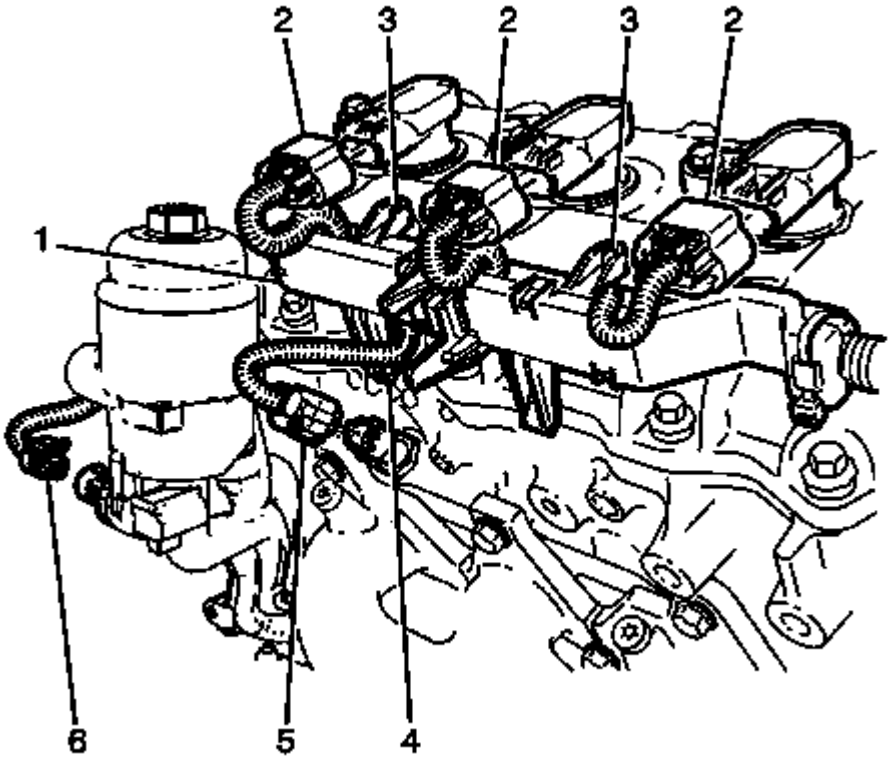

Fig. 86: Ignition Coil Electrical Connectors & Wiring Harness
Courtesy of GENERAL MOTORS COMPANY

NOTE:

- **Ensure the wiring harness (1) is located on the locating lugs of the camshaft cover.**
- **Listen for an audible click to confirm the correct installation of the wiring harness (1) to the camshaft cover.**

11. Install the engine wiring harness (1) to the left bank camshaft cover.

NOTE: **After connecting the ignition coil connectors ensure that the ignition coil electrical connectors are locked to the ignition coils.**

12. Connect the ignition coil electrical connectors (2) to the ignition coils.

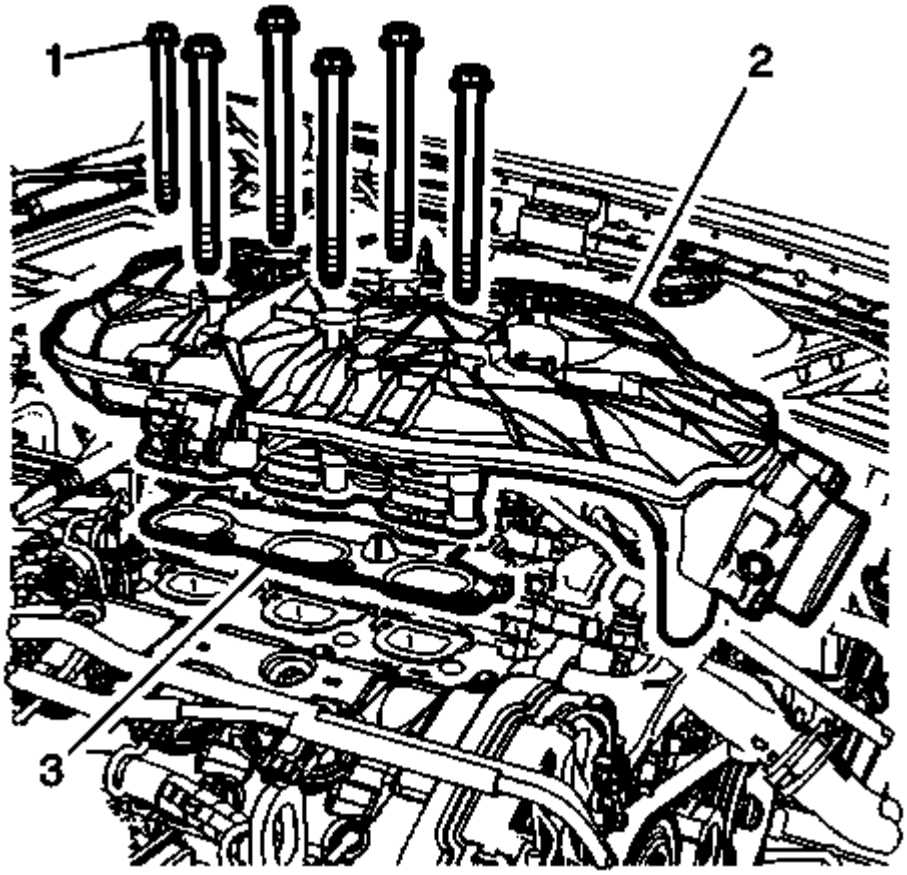

Fig. 87: Intake Manifold, Bolts & Gasket
Courtesy of GENERAL MOTORS COMPANY

13. Install the intake manifold (2). Refer to **Intake Manifold Replacement**.
14. Install the positive crankcase ventilation tubes. Refer to **Positive Crankcase Ventilation Hose/Pipe/Tube Replacement**.

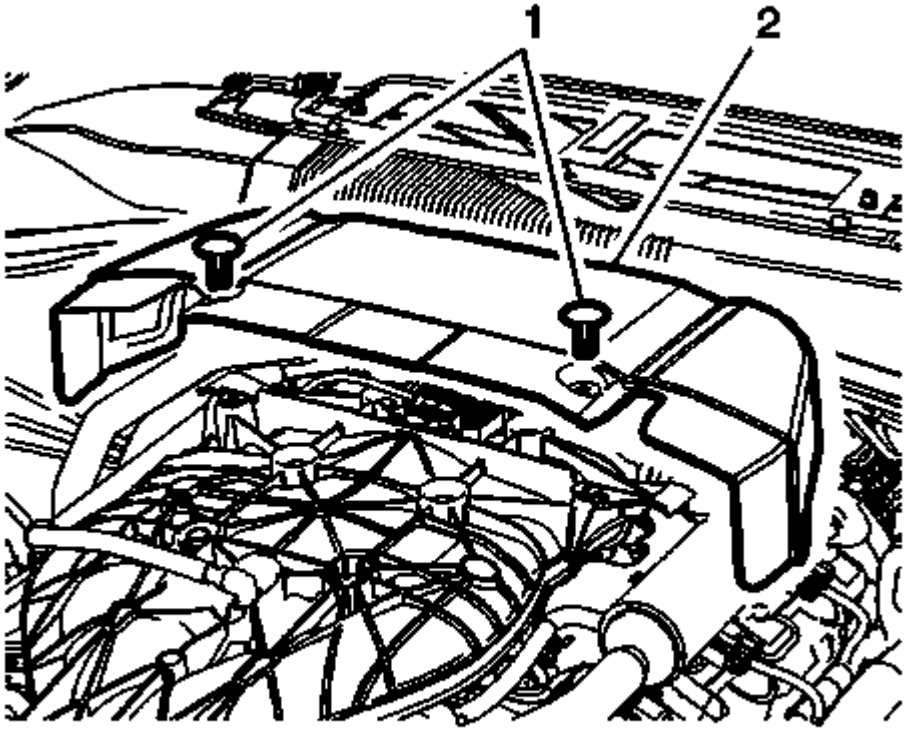

Fig. 88: Rear Intake Manifold Cover & Retainers
Courtesy of GENERAL MOTORS COMPANY

15. Install the rear intake manifold cover (2).
16. Install the rear intake manifold cover retainers (1).

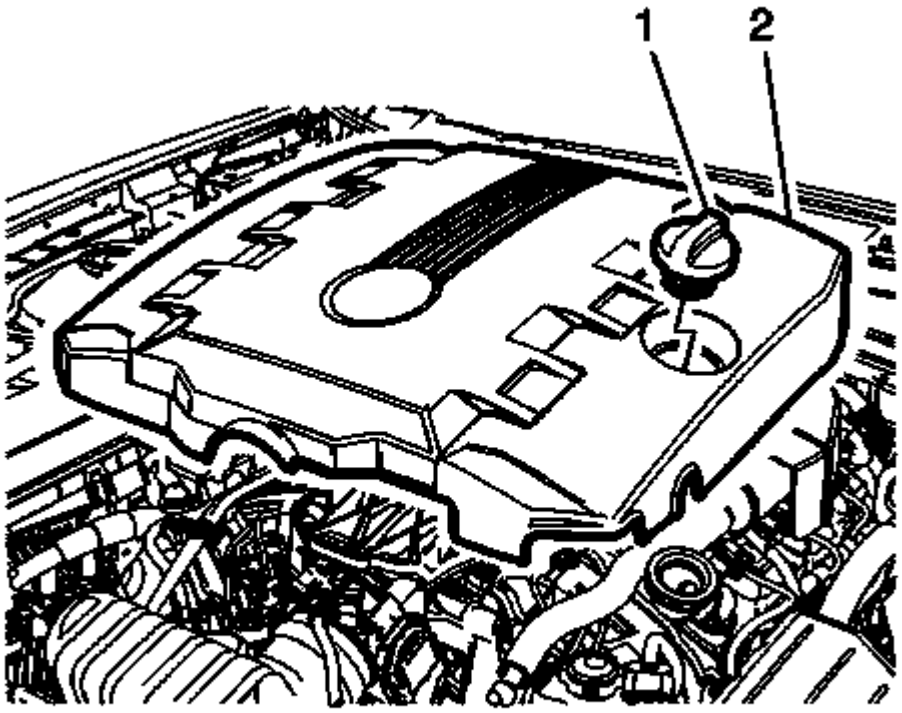

Fig. 89: Intake Manifold Cover & Cap
Courtesy of GENERAL MOTORS COMPANY

17. Install the intake manifold cover (2). Refer to **Intake Manifold Cover Replacement - Front**.
18. Connect the battery ground cable to the battery. Refer to **Battery Negative Cable Disconnection and Connection** .

CAMSHAFT COVER REPLACEMENT - RIGHT SIDE

Special Tools

EN 46101 Spark Plug Tube Seal Guide

Removal Procedure

WARNING: Refer to Battery Disconnect Warning .

1. Disconnect the battery ground cable from the battery. Refer to **Battery Negative Cable Disconnection and Connection** .

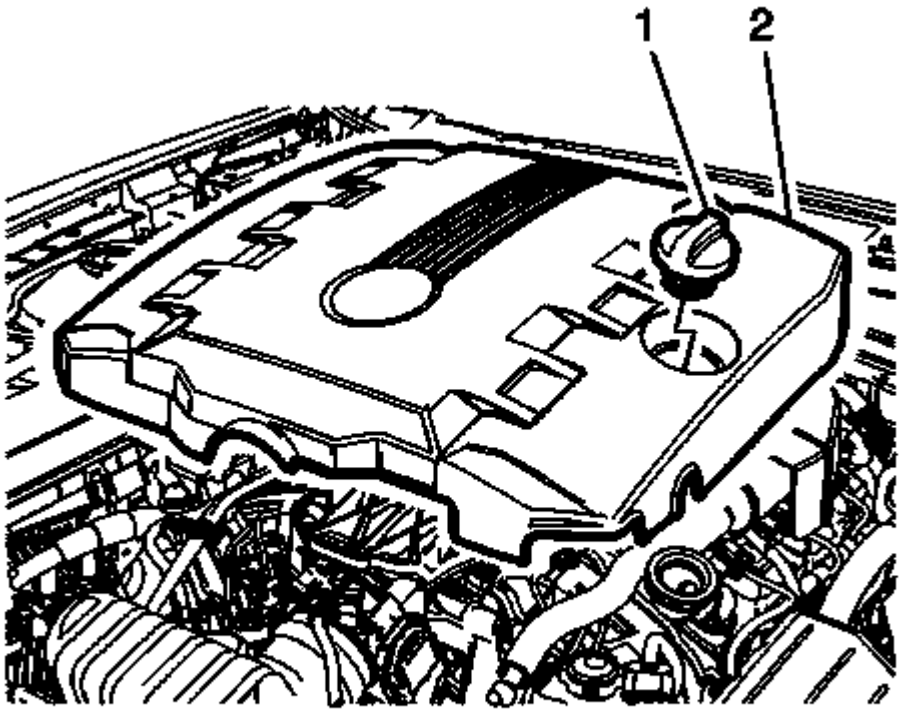

Fig. 90: Intake Manifold Cover & Cap
Courtesy of GENERAL MOTORS COMPANY

2. Remove the intake manifold cover (2). Refer to **Intake Manifold Cover Replacement - Front**.

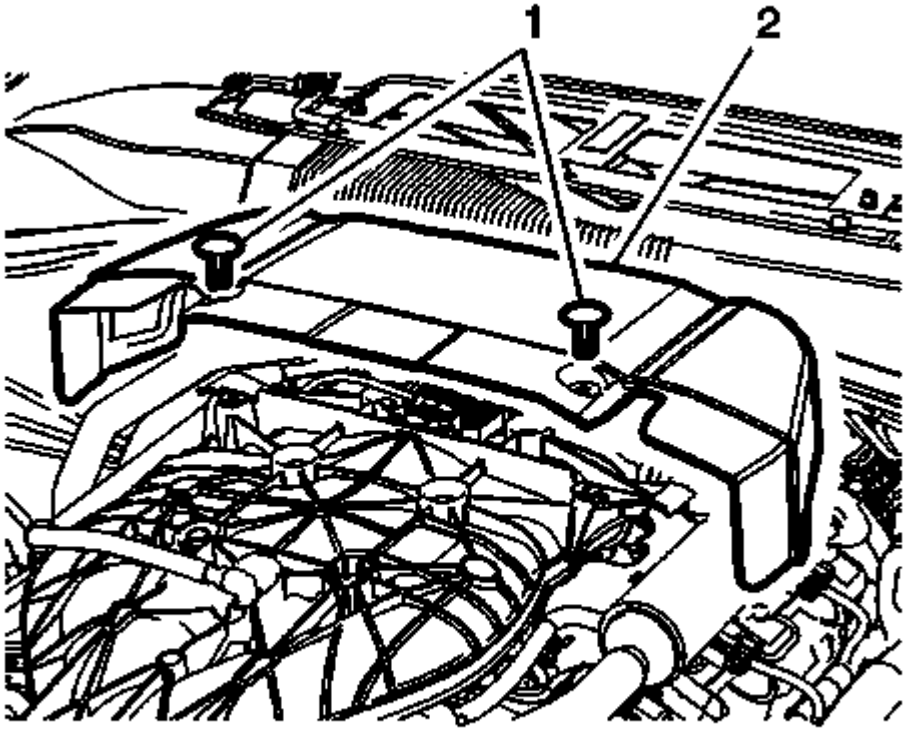

Fig. 91: Rear Intake Manifold Cover & Retainers
Courtesy of GENERAL MOTORS COMPANY

3. Remove the rear intake manifold cover retainers (1).
4. Remove the rear intake manifold cover (2).
5. Remove the positive crankcase ventilation tubes. Refer to **Positive Crankcase Ventilation Hose/Pipe/Tube Replacement**.

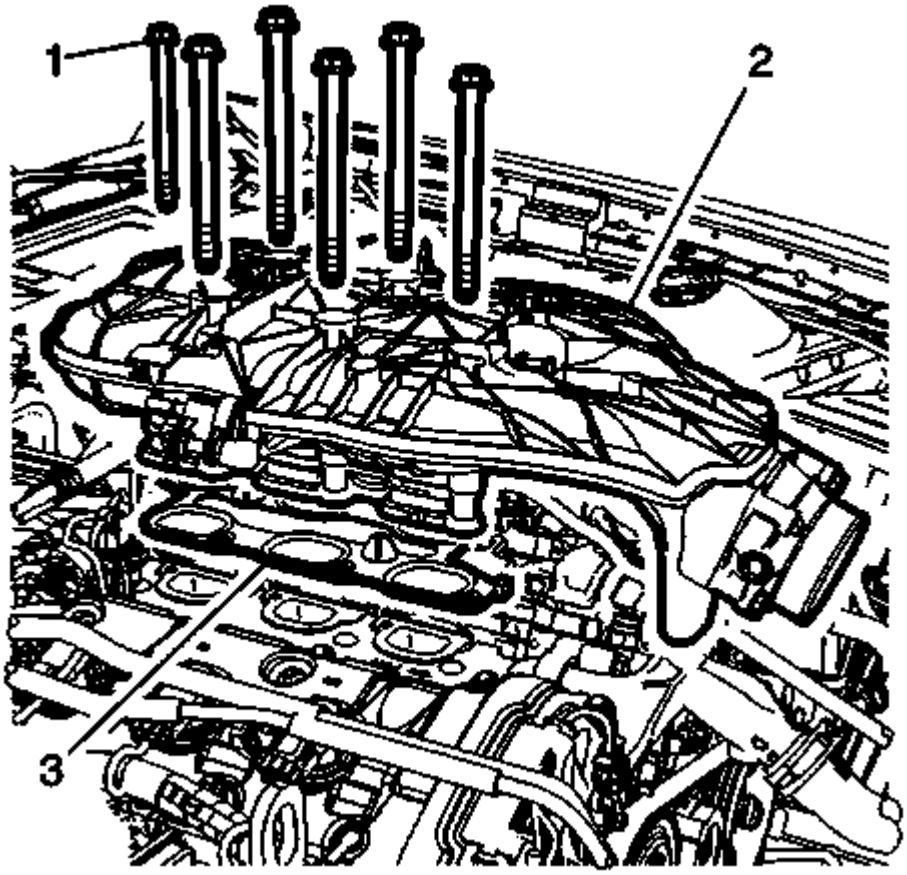

Fig. 92: Intake Manifold, Bolts & Gasket
Courtesy of GENERAL MOTORS COMPANY

6. Remove the intake manifold (2). Refer to **Intake Manifold Removal (LFX)** .

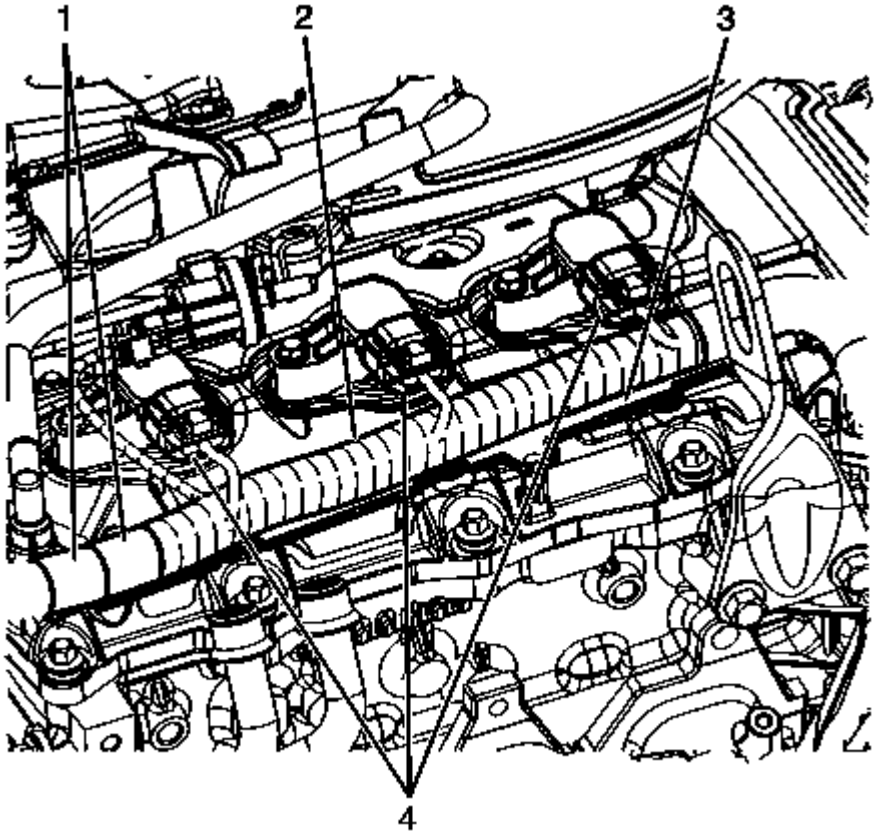

Fig. 93: Ignition Coil Electrical Connectors & Wiring Harness
Courtesy of GENERAL MOTORS COMPANY

NOTE:

- **Unlock the ignition coil electrical connectors before disconnecting from the ignition coils.**
- **Do not damage the ignition coil electrical connectors.**

7. Disconnect the ignition coil electrical connectors (4) from the ignition coils.

NOTE: **Use a suitable tool to detach the wiring harness retainers from the camshaft cover.**

8. Disconnect the wiring harness (2) from the camshaft cover.
9. Reposition and secure the wiring harness (2) away from the camshaft cover in order to provide clearance for removal of the camshaft cover.

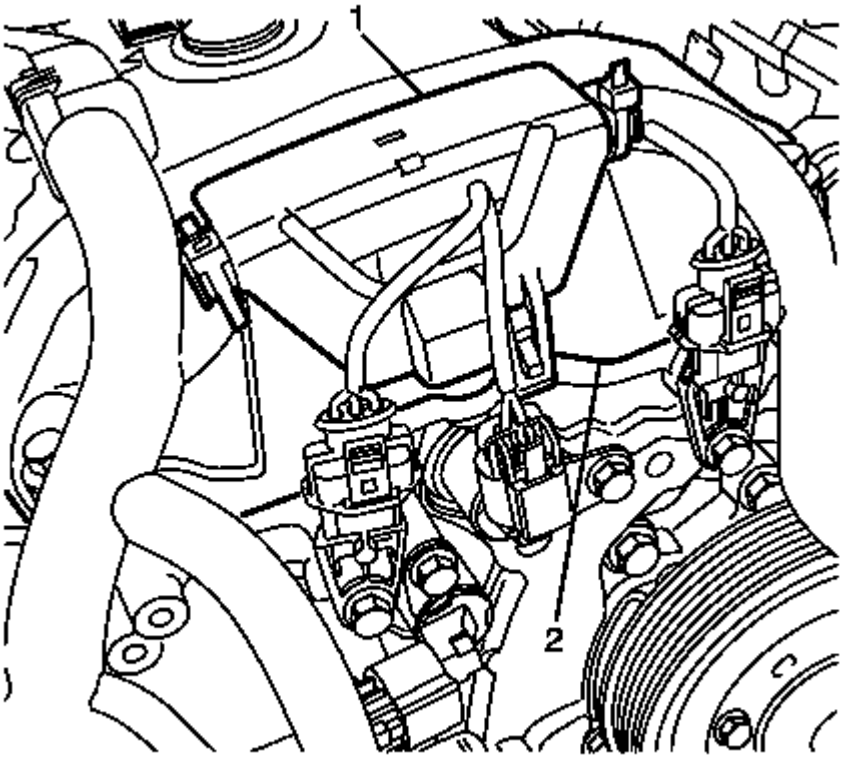

Fig. 94: Identifying Wiring Harness & Camshaft Cover
Courtesy of GENERAL MOTORS COMPANY

NOTE:

- **Do not disconnect the engine front cover electrical connectors.**
- **Use a suitable tool to detach the wiring harness (1) from the camshaft cover (2) and lift the wiring harness (1) upwards to detach the wiring harness from the camshaft cover (2).**

10. Remove the wiring harness (1) from the front of the camshaft cover (2).
11. Reposition and secure the wiring harness (1) away from the camshaft cover (2) in order to provide clearance for removal of the camshaft cover (2).

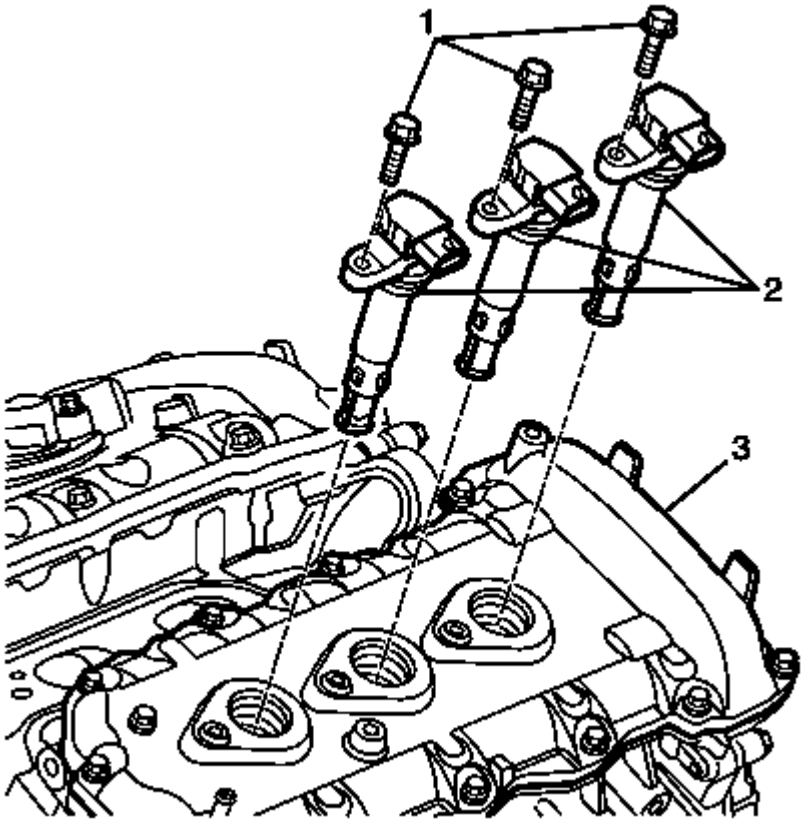

Fig. 95: Identifying Ignition Coil To Camshaft Cover Retaining Bolts
Courtesy of GENERAL MOTORS COMPANY

12. Remove the ignition coil to camshaft cover retaining bolts (1).
13. Remove the ignition coils (2) from the camshaft cover (3).

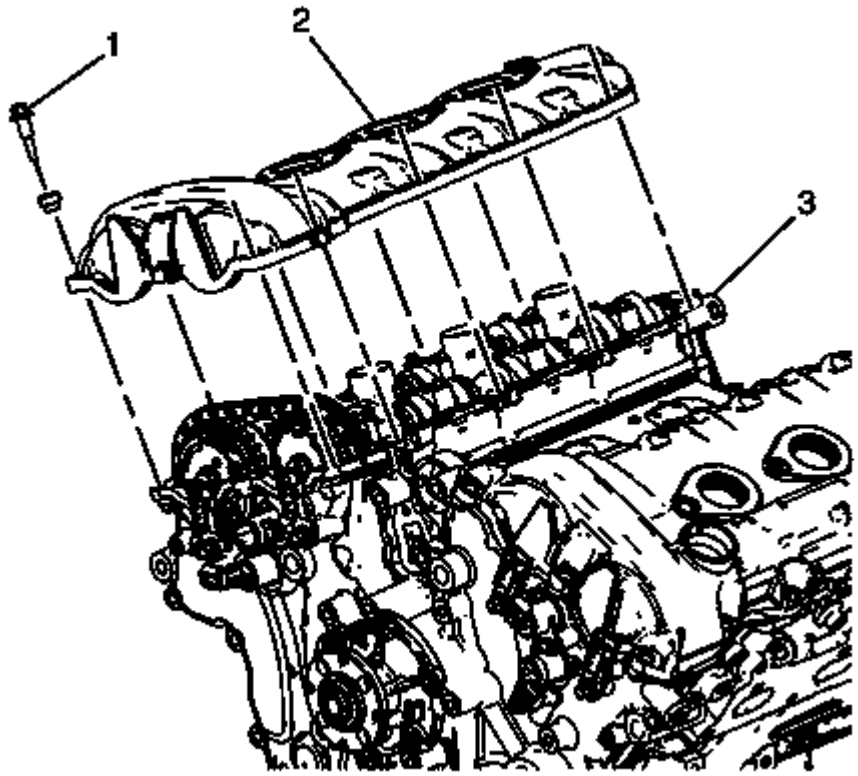

Fig. 96: Identifying Right Camshaft Cover With Bolts
Courtesy of GENERAL MOTORS COMPANY

14. Remove the camshaft cover to cylinder head retaining bolts (1).
15. Remove the camshaft cover (2) from the cylinder head (3).
16. Remove and discard the camshaft cover seal and grommets.

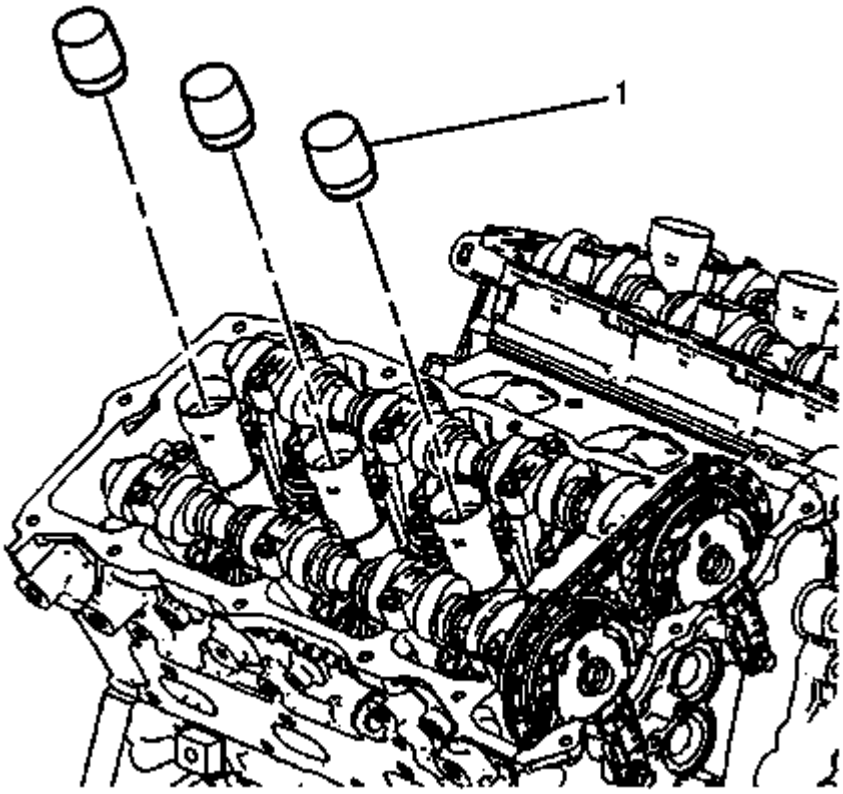

Fig. 97: Spark Plug Tube Seal Guide
Courtesy of GENERAL MOTORS COMPANY

17. Install the spark plug tube plugs **EN 46101** spark plug tube seal guide (1) to the spark plug tubes to prevent dirt and other contaminants from entering the cylinders.

Installation Procedure

1. Install a NEW camshaft cover seal and NEW bolt grommets.
2. Wipe the camshaft cover sealing surface on the right cylinder head with a clean, lint-free cloth.

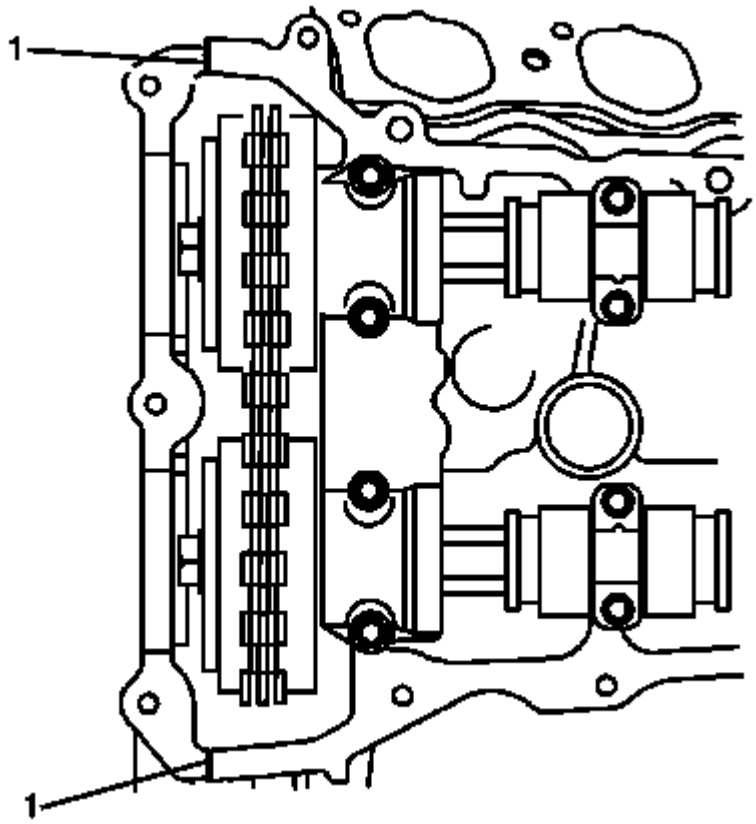

Fig. 98: View Of Engine Front Cover Split Lines
Courtesy of GENERAL MOTORS COMPANY

NOTE: Ensure the sealing surfaces of the cylinder head and camshaft cover are clean.

3. Place a 3 mm bead of GM approved sealant (1) on the join line between the engine front cover and the cylinder head.

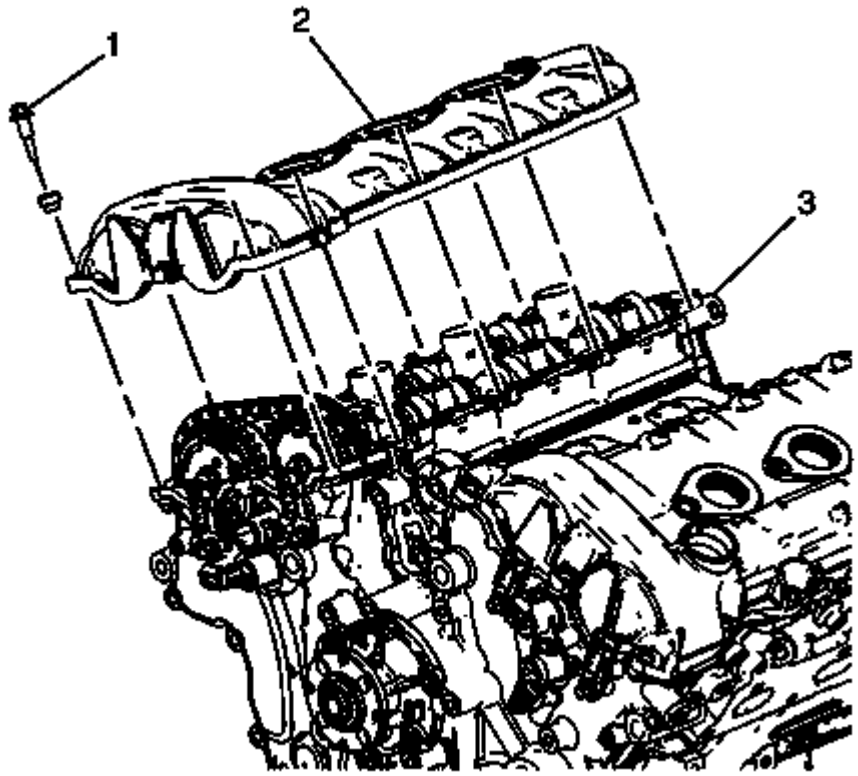

Fig. 99: Identifying Right Camshaft Cover With Bolts
Courtesy of GENERAL MOTORS COMPANY

4. Place the right camshaft cover (2) into position onto the right cylinder head (3).
5. Loosely install the right camshaft cover bolts (1).

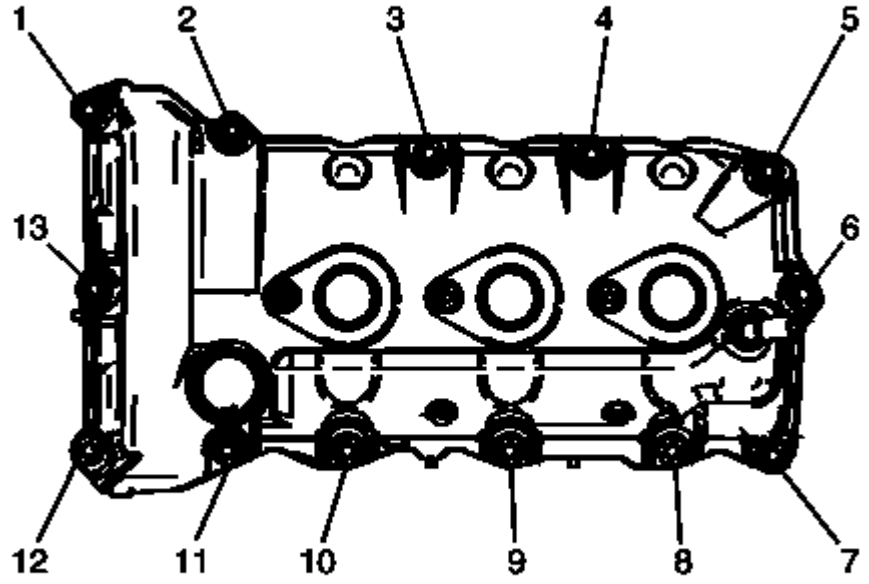

Fig. 100: Identifying Left Camshaft Cover To Cylinder Head Retaining Bolt Tightening Sequence
Courtesy of GENERAL MOTORS COMPANY

CAUTION: Refer to Fastener Caution .

6. Tighten the right camshaft cover to cylinder head retaining bolts in the sequence to 10 (89 lb in).

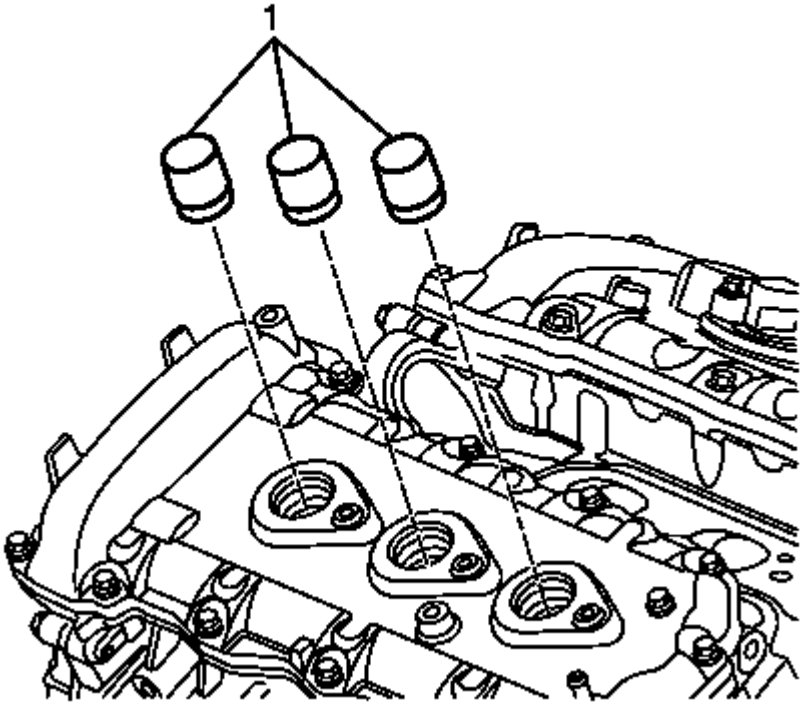

Fig. 101: Spark Plug Tube Seal Guide
Courtesy of GENERAL MOTORS COMPANY

7. Remove the spark plug tube plugs **EN 46101** spark plug tube seal guide (1) from the spark plug tubes of the right cylinder head.

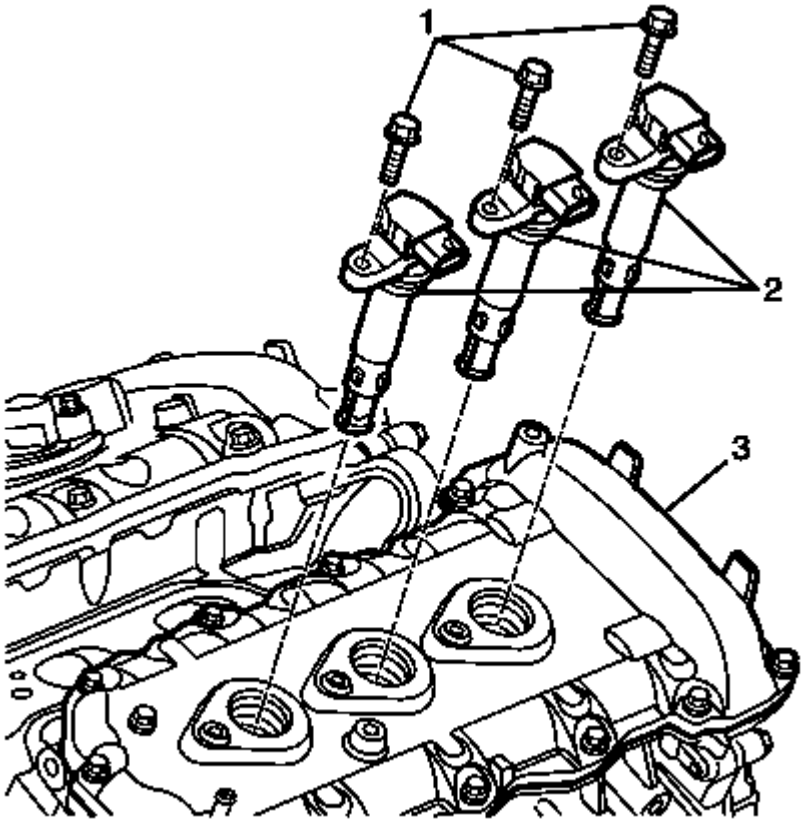

Fig. 102: Identifying Ignition Coil To Camshaft Cover Retaining Bolts
Courtesy of GENERAL MOTORS COMPANY

8. Install the ignition coils (2) to the camshaft cover (3).
9. Install the ignition coil to camshaft cover retaining bolts (1) and tighten to 10 (89 lb in).

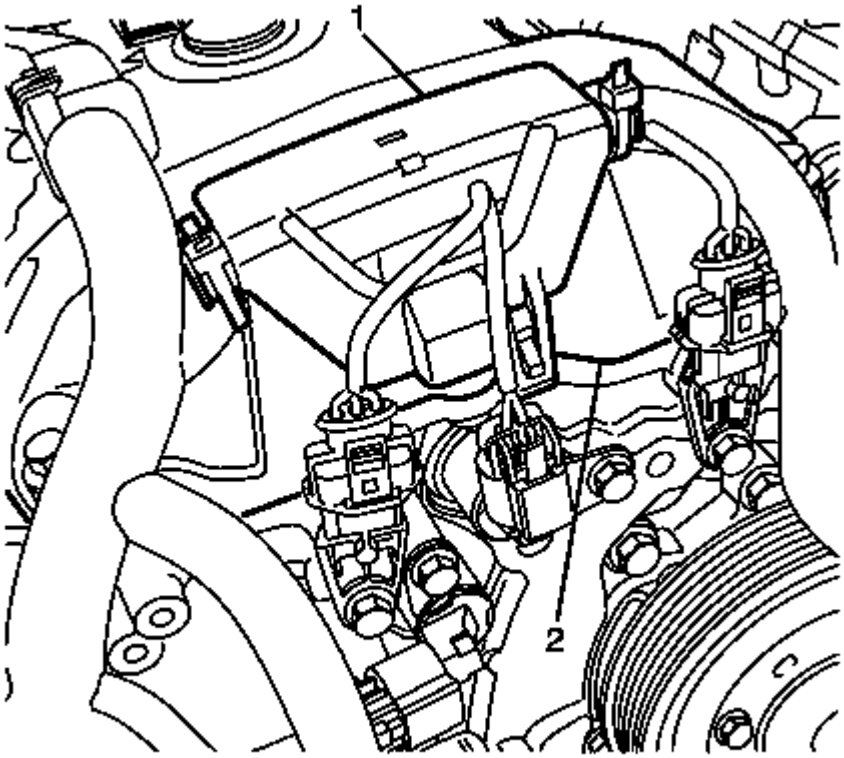

Fig. 103: Identifying Wiring Harness & Camshaft Cover
Courtesy of GENERAL MOTORS COMPANY

NOTE:

- **Ensure the wiring harness (1) is located on the locating lugs of the camshaft cover (2).**
- **Listen for an audible click to confirm the correct installation of the wiring harness (1) to the camshaft cover (2).**

10. Install the wiring harness (1) to the front of the camshaft cover (2).

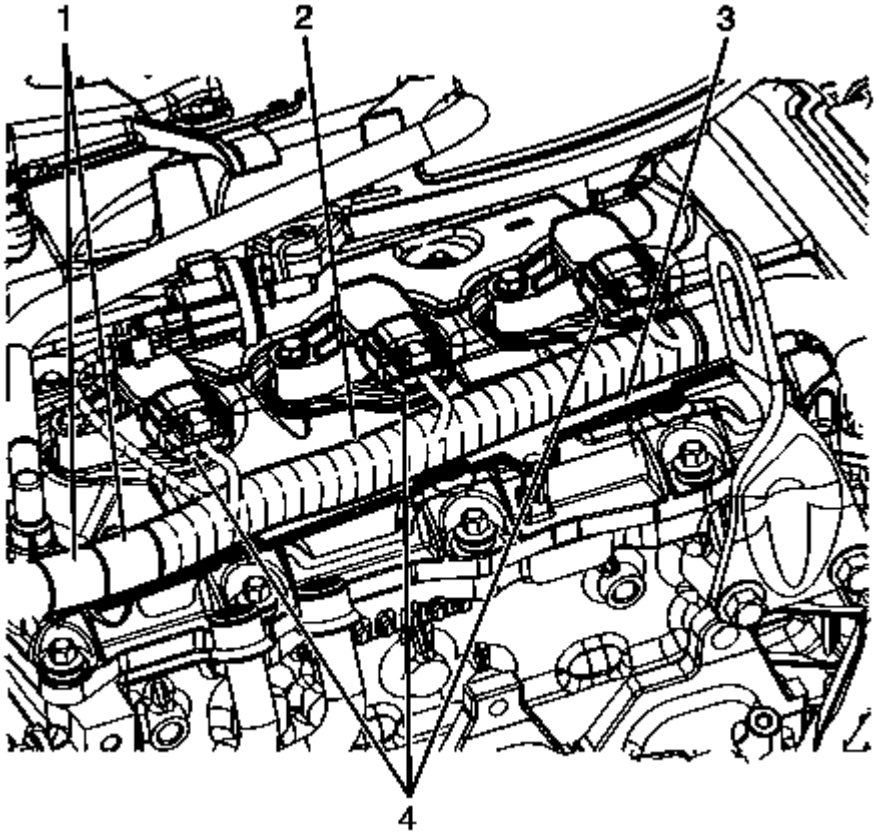

Fig. 104: Ignition Coil Electrical Connectors & Wiring Harness
Courtesy of GENERAL MOTORS COMPANY

11. Install the engine wiring harness (2) to the camshaft cover.

NOTE:

- **After connecting the ignition coil connectors ensure that the ignition coil electrical connectors are locked to the ignition coils.**
- **Do not damage the ignition coil electrical connectors.**

12. Connect the ignition coil electrical connectors (4) to the ignition coils.

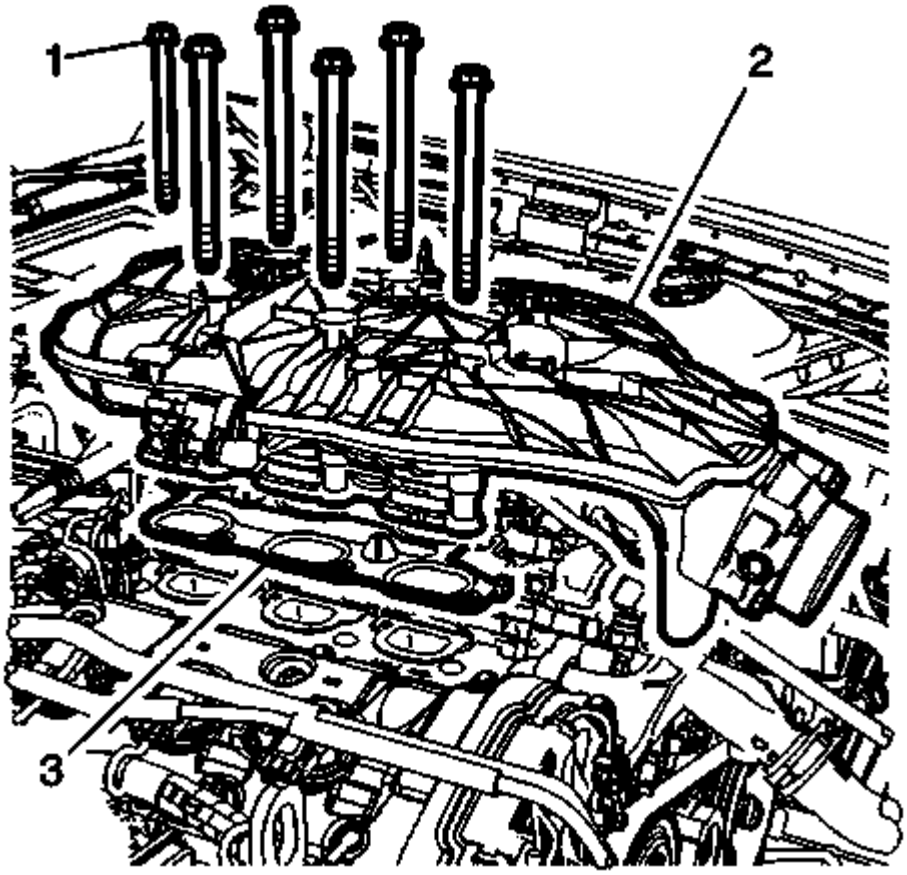

Fig. 105: Intake Manifold, Bolts & Gasket
Courtesy of GENERAL MOTORS COMPANY

13. Install the intake manifold (2). Refer to **Intake Manifold Replacement**.
14. Install the positive crankcase ventilation tubes. Refer to **Positive Crankcase Ventilation Hose/Pipe/Tube Replacement**.

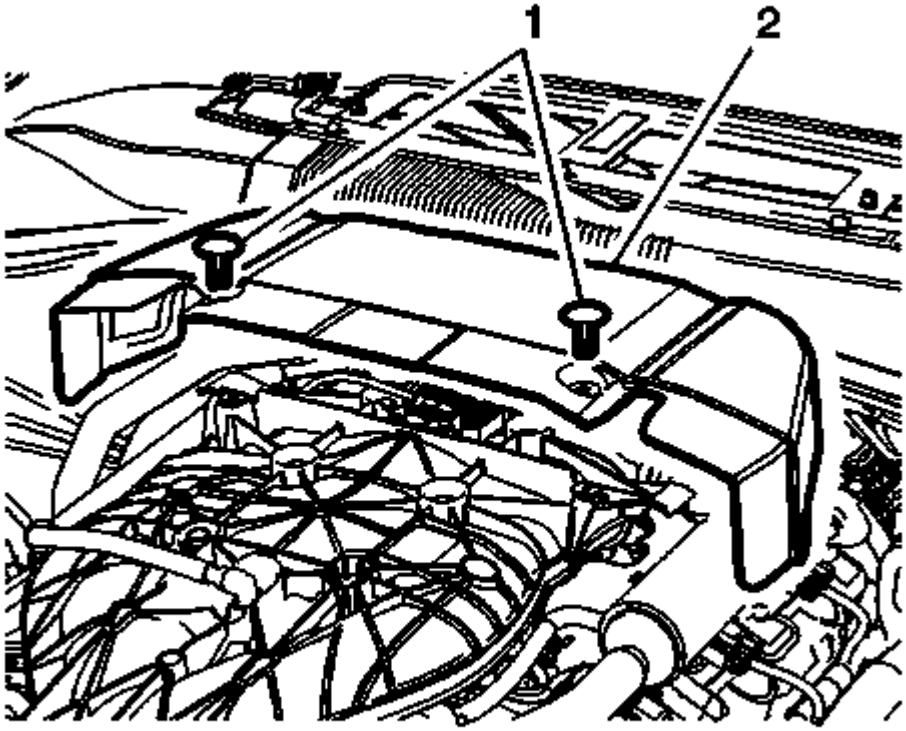

Fig. 106: Rear Intake Manifold Cover & Retainers
Courtesy of GENERAL MOTORS COMPANY

15. Install the rear intake manifold cover (2).
16. Install the rear intake manifold cover retainers (1).

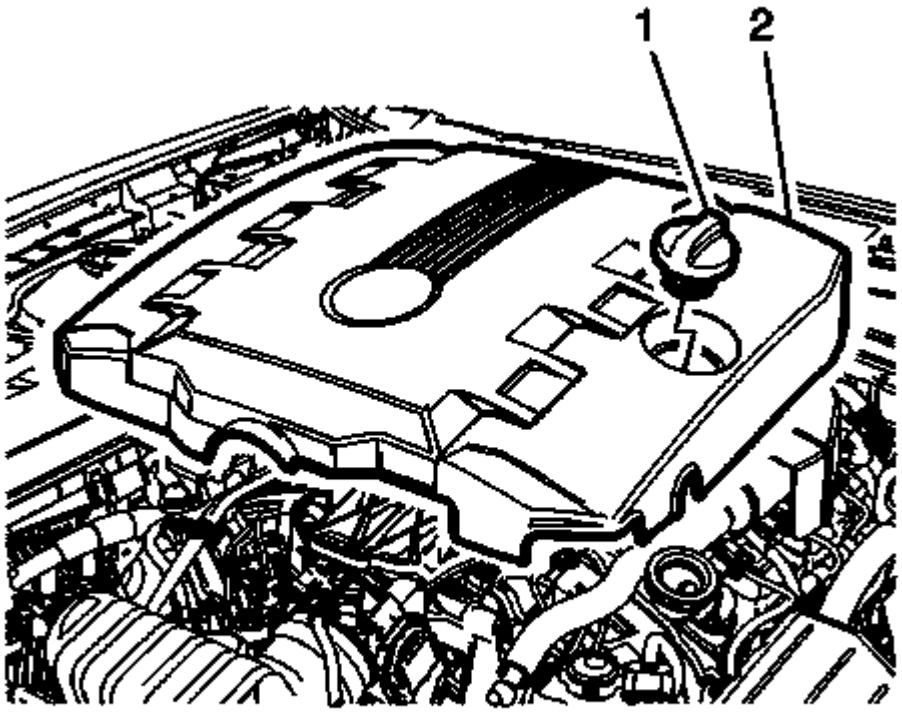

Fig. 107: Intake Manifold Cover & Cap
Courtesy of GENERAL MOTORS COMPANY

17. Install the intake manifold cover (2). Refer to **Intake Manifold Cover Replacement - Front**.
18. Connect the battery ground cable to the battery. Refer to **Battery Negative Cable Disconnection and Connection** .

ENGINE FRONT COVER REPLACEMENT

Special Tools

EN 46109 Engine Front Cover Installation Guide Pins

Removal Procedure

1. Remove the engine cover. **Intake Manifold Cover Replacement - Rear**.
2. Remove the intake manifold. Refer to **Intake Manifold Replacement**.
3. Remove the camshaft covers. Refer to **Camshaft Cover Replacement - Left Side**, and **Camshaft Cover Replacement - Right Side**.
4. Drain the engine coolant. Refer to **Cooling System Draining and Filling (LFX, Static Fill)** , **Cooling System Draining and Filling (GE 47716)** .

5. Disconnect the purge vent hose from the water outlet.
6. Remove the water outlet with the radiator hose and reposition aside. Refer to **Radiator Outlet Hose Replacement (LSA)**
7. Remove the accessory drive belts. Refer to **Drive Belt Replacement**
8. Remove the A/C compressor and power steering belt tensioner. Refer to **Drive Belt Tensioner Replacement**
9. Remove the generator bracket with the generator and the belt tensioner. Refer to **Generator Bracket Replacement (LFX)** .

NOTE: Do not disconnect the power steering pipes or drain the power steering fluid.

10. Remove the power steering fluid reservoir and reposition the power steering fluid reservoir in order to provide access. Refer to **Power Steering Fluid Reservoir Bracket Replacement**

NOTE: Do not disconnect the power steering pipes/hoses.

11. Remove the power steering pump upper front bolt and loosen the remaining two bolts.
12. Remove the crankshaft balancer. Refer to **Crankshaft Balancer Removal** .
13. Remove the camshaft position sensors. Refer to **Camshaft Position Sensor Replacement - Bank 2 (Left Side) Exhaust** , , **Camshaft Position Sensor Replacement - Bank 2 (Left Side) Intake** , , **Camshaft Position Sensor Replacement - Bank 1 (Right Side) Exhaust** , and **Camshaft Position Sensor Replacement - Bank 1 (Right Side) Intake** .
14. Remove the camshaft position actuator solenoid valves from the front cover. Refer to **Camshaft Position Actuator Solenoid Valve Solenoid Replacement - Bank 1 (Right Side) Intake** , , **Camshaft Position Actuator Solenoid Valve Solenoid Replacement - Bank 1 (Right Side) Exhaust** , , **Camshaft Position Actuator Solenoid Valve Solenoid Replacement - Bank 2 (Left Side) Intake** , , and **Camshaft Position Actuator Solenoid Valve Solenoid Replacement - Bank 2 (Left Side) Exhaust** .

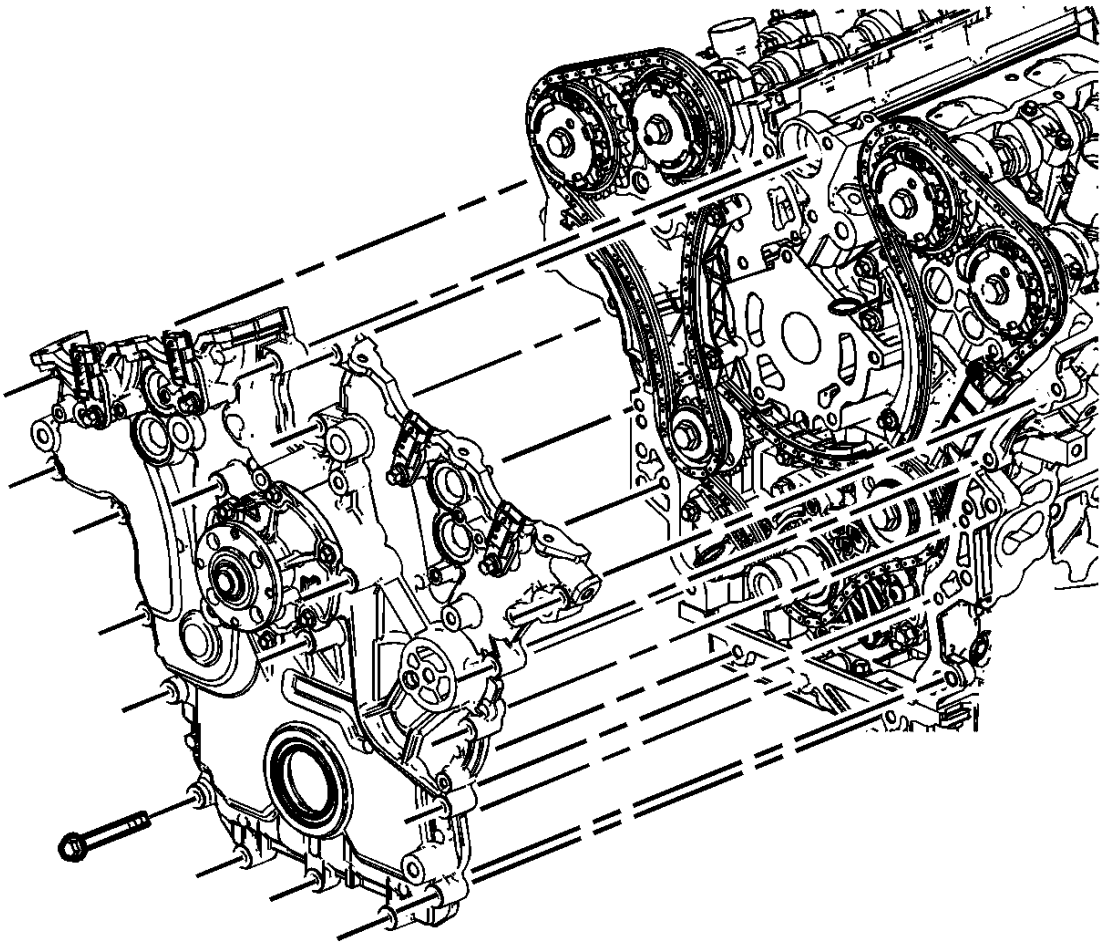

Fig. 108: Engine Front Cover
Courtesy of GENERAL MOTORS COMPANY

15. Remove the engine front cover with the water pump. Refer to **Engine Front Cover Removal** .
16. Disassemble the engine front cover. Refer to **Engine Front Cover Disassemble** .

NOTE: **Do NOT use sharp and/or metal gasket scrapers in order to clean the sealing surfaces.**

17. Carefully clean the engine front cover sealing surfaces. Refer to **Engine Front Cover Cleaning and Inspection** .

NOTE: **Insert a piece of cardboard between the oil pan front and the oil pump in order to prevent any contaminants from falling into the oil pan.**

18. Carefully clean the engine front cover sealing surfaces. Refer to **Engine Front Cover Cleaning and**

Inspection .

19. Use compressed air in order to remove any engine coolant from the engine cooling passages and from the top of the oil pan scraper (windage tray).

Installation Procedure

1. Assemble the engine front cover. Refer to **Engine Front Cover Assemble** .

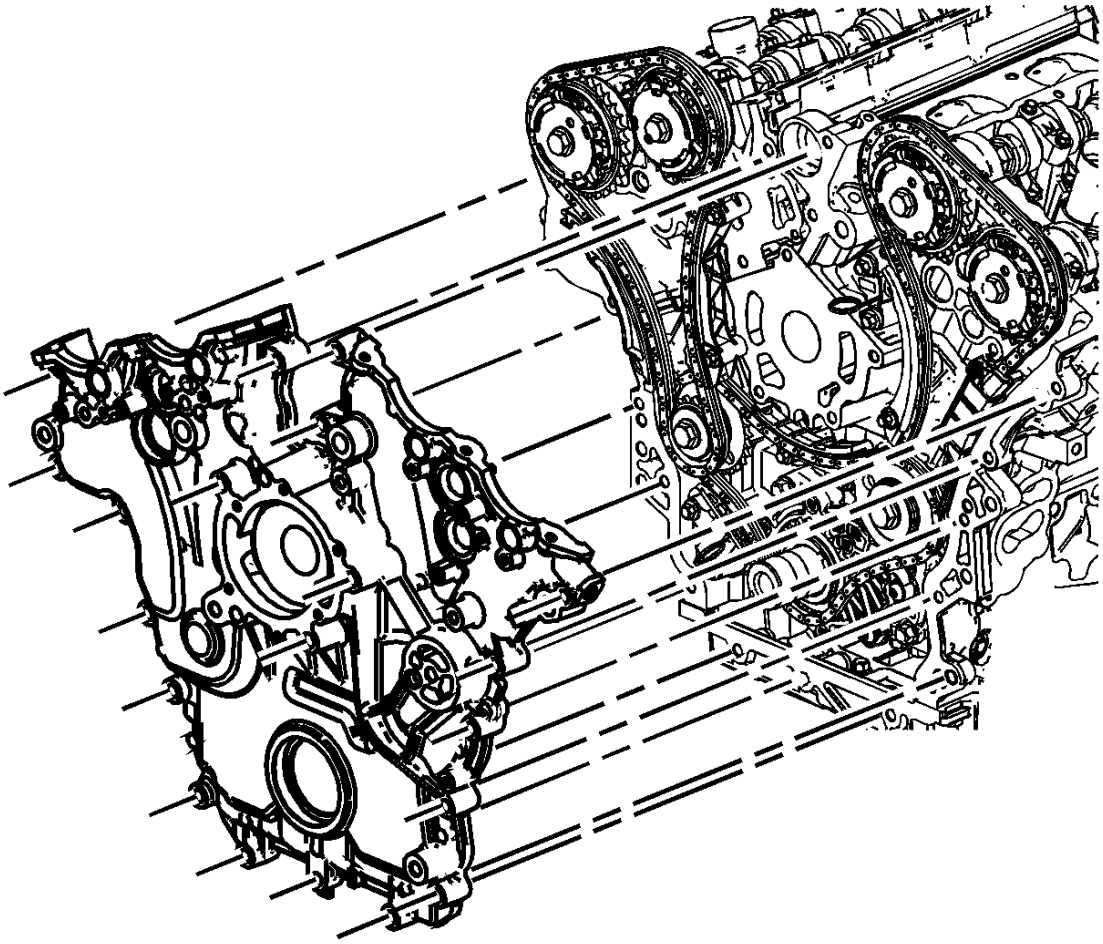

Fig. 109: View Of Engine Front Cover
Courtesy of GENERAL MOTORS COMPANY

2. Use the **EN 46109** engine front cover installation guide pins in order to install the engine front cover. Refer to **Engine Front Cover Installation** .
3. Install the camshaft position actuator solenoid valves to the front cover. Refer to **Camshaft Position Actuator Solenoid Valve Solenoid Replacement - Bank 1 (Right Side) Intake** , , **Camshaft Position Actuator Solenoid Valve Solenoid Replacement - Bank 1 (Right Side) Exhaust** , , **Camshaft Position Actuator Solenoid Valve Solenoid Replacement - Bank 2 (Left Side) Intake** , , and **Camshaft**

Position Actuator Solenoid Valve Solenoid Replacement - Bank 2 (Left Side) Exhaust .

4. Install the camshaft position sensors. Refer to **Camshaft Position Sensor Replacement - Bank 2 (Left Side) Exhaust** , , **Camshaft Position Sensor Replacement - Bank 2 (Left Side) Intake** , , **Camshaft Position Sensor Replacement - Bank 1 (Right Side) Exhaust** , and **Camshaft Position Sensor Replacement - Bank 1 (Right Side) Intake** .
5. Install the crankshaft balancer. Refer to **Crankshaft Balancer Installation** .
6. Install the power steering pump.
7. Install the power steering pump pulley.
8. Install the power steering fluid reservoir. Refer to **Power Steering Fluid Reservoir Replacement** .
9. Install the generator bracket with the generator and the belt tensioner. Refer to **Generator Bracket Replacement (LFX)** .
10. Install the A/C compressor and power steering belt tensioner.
11. Install the accessory drive belts.
12. Install the water outlet.
13. Install the purge vent hose to the water outlet.
14. Fill the cooling system. Refer to **Cooling System Draining and Filling (LFX, Static Fill)** , **Cooling System Draining and Filling (GE 47716)** .
15. Install the camshaft covers. Refer to **Camshaft Cover Replacement - Left Side**, and **Camshaft Cover Replacement - Right Side**.
16. Install the intake manifold. Refer to **Intake Manifold Replacement**.
17. Install the engine cover. Refer to **Intake Manifold Cover Replacement - Rear**.
18. Fill the cooling system. Refer to **Cooling System Draining and Filling (LFX, Static Fill)** , **Cooling System Draining and Filling (GE 47716)** .

SECONDARY CAMSHAFT INTERMEDIATE DRIVE CHAIN REPLACEMENT - LEFT SIDE

Removal Procedure

1. Remove the engine front cover. Refer to **Engine Front Cover Replacement**.
2. Remove the right bank secondary camshaft drive chain tensioner. Refer to **Secondary Timing Chain Tensioner Removal - Right Side** .
3. Remove the right bank secondary camshaft drive chain shoe. Refer to **Secondary Camshaft Drive Chain Shoe Removal - Right Side** .
4. Remove the right bank secondary camshaft drive chain guide. Refer to **Secondary Timing Chain Guide Removal - Right Side** .
5. Remove the right bank secondary camshaft drive chain. Refer to **Secondary Camshaft Intermediate Drive Chain Removal - Right Side** .
6. Remove the primary camshaft drive chain tensioner. Refer to **Primary Camshaft Intermediate Drive Chain Tensioner Removal** .
7. Remove the primary upper camshaft drive chain guide. Refer to **Primary Timing Chain Guide Removal - Upper** .
8. Remove the primary camshaft drive chain. Refer to **Primary Camshaft Intermediate Drive Chain**

Removal .

9. Remove the right bank camshaft intermediate drive chain idler. Refer to **Timing Chain Idler Sprocket Removal - Right Side** .
10. Remove the left bank secondary camshaft drive chain tensioner. Refer to **Secondary Timing Chain Tensioner Removal - Left Side** .
11. Remove the left bank secondary camshaft drive chain shoe. Refer to **Secondary Camshaft Drive Chain Shoe Removal - Left Side** .
12. Remove the left bank secondary camshaft drive chain guide. Refer to **Secondary Timing Chain Guide Removal - Left Side** .
13. Remove the left bank camshaft intermediate drive chain idler. Refer to **Timing Chain Idler Sprocket Removal - Left Side** .

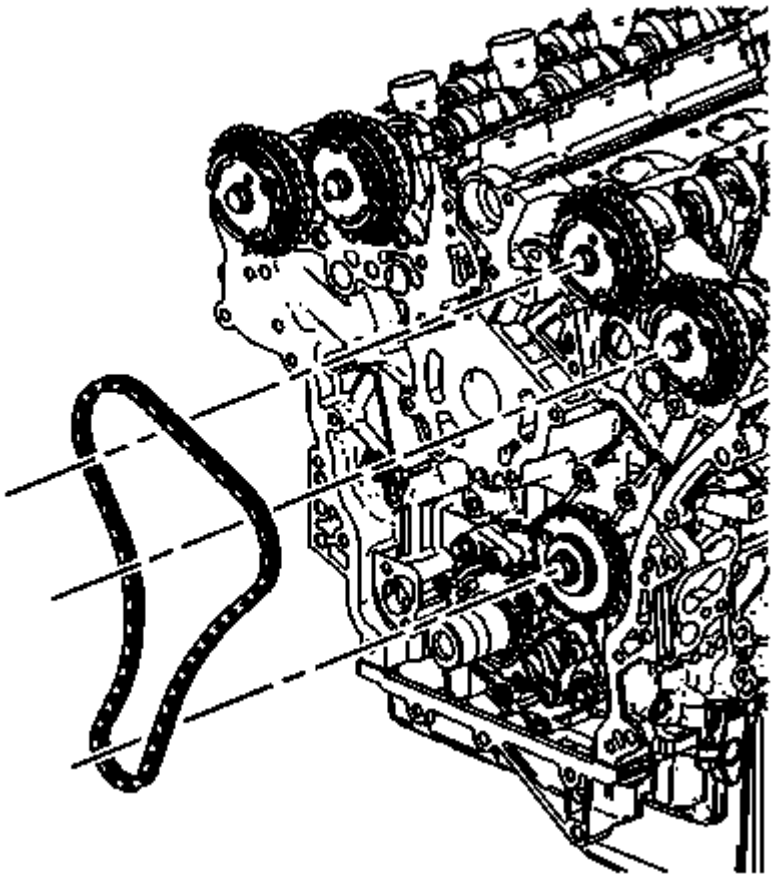

Fig. 110: View Of Left Bank Secondary Camshaft Drive Chain
Courtesy of GENERAL MOTORS COMPANY

14. Remove the left bank secondary camshaft drive chain. Refer to **Secondary Camshaft Intermediate Drive Chain Removal - Left Side** .
15. Clean and inspect all of the camshaft timing drive components. Refer to **Camshaft Timing Drive Components Cleaning and Inspection** . Replace components as necessary.

Installation Procedure

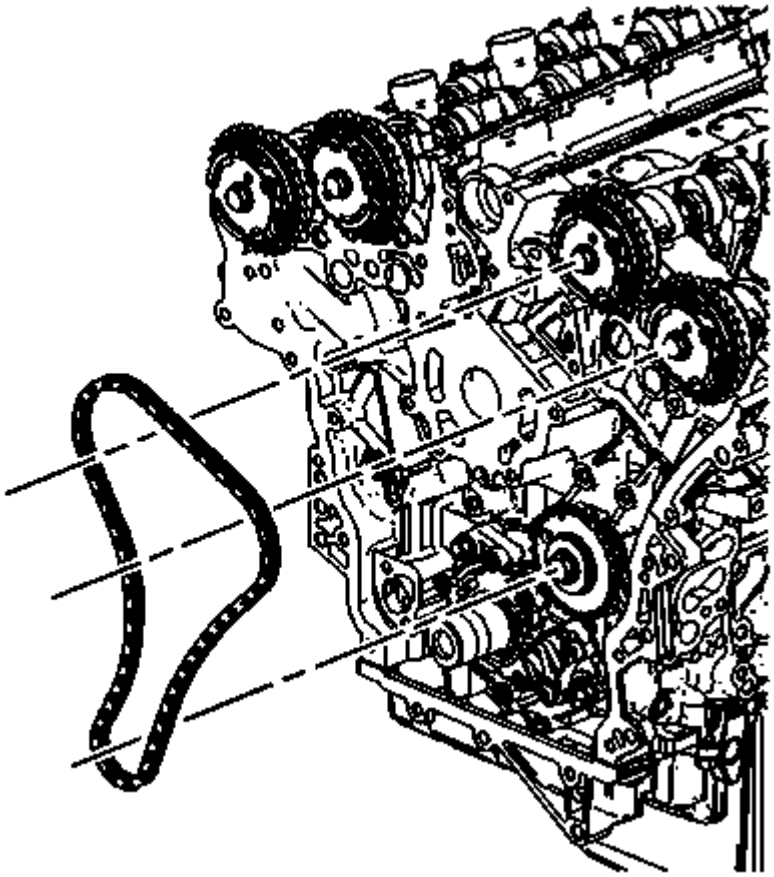

Fig. 111: View Of Left Bank Secondary Camshaft Drive Chain
Courtesy of GENERAL MOTORS COMPANY

1. Install the left bank secondary camshaft drive chain. Refer to **Secondary Camshaft Intermediate Drive Chain Installation - Left Side** .
2. Install the left bank camshaft intermediate drive chain idler. Refer to **Timing Chain Idler Sprocket Installation - Left Side** .
3. Install the left bank secondary camshaft drive chain guide. Refer to **Secondary Timing Chain Guide Installation - Left Side** .
4. Install the left bank secondary camshaft drive chain shoe. Refer to **Secondary Camshaft Drive Chain Shoe Installation - Left Side** .
5. Install the left bank secondary camshaft drive chain tensioner. Refer to **Secondary Timing Chain Tensioner Installation - Left Side** .
6. Install the right bank camshaft intermediate drive chain idler. Refer to **Timing Chain Idler Sprocket Installation - Right Side** .
7. Install the primary camshaft drive chain. Refer to **Primary Camshaft Intermediate Drive Chain Installation** .
8. Install the primary upper camshaft drive chain guide. Refer to **Primary Timing Chain Guide Installation - Upper** .
9. Install the primary camshaft drive chain tensioner. Refer to **Primary Camshaft Intermediate Drive Chain Tensioner Installation** .

10. Install the right bank secondary camshaft drive chain. Refer to **Secondary Camshaft Intermediate Drive Chain Installation - Right Side** .
11. Install the right bank secondary camshaft drive chain guide. Refer to **Secondary Timing Chain Guide Installation - Right Side** .
12. Install the right bank secondary camshaft drive chain shoe. Refer to **Secondary Camshaft Drive Chain Shoe Installation - Right Side** .
13. Install the right bank secondary camshaft drive chain tensioner. Refer to **Secondary Timing Chain Tensioner Installation - Right Side** .
14. Install the engine front cover. Refer to **Engine Front Cover Replacement**.

SECONDARY CAMSHAFT INTERMEDIATE DRIVE CHAIN REPLACEMENT - RIGHT SIDE

Removal Procedure

1. Remove the engine front cover. Refer to **Engine Front Cover Replacement**.
2. Remove the right bank secondary camshaft drive chain tensioner. Refer to **Secondary Timing Chain Tensioner Removal - Right Side** .
3. Remove the right bank secondary camshaft drive chain shoe. Refer to **Secondary Camshaft Drive Chain Shoe Removal - Right Side** .
4. Remove the right bank secondary camshaft drive chain guide. Refer to **Secondary Timing Chain Guide Removal - Right Side** .

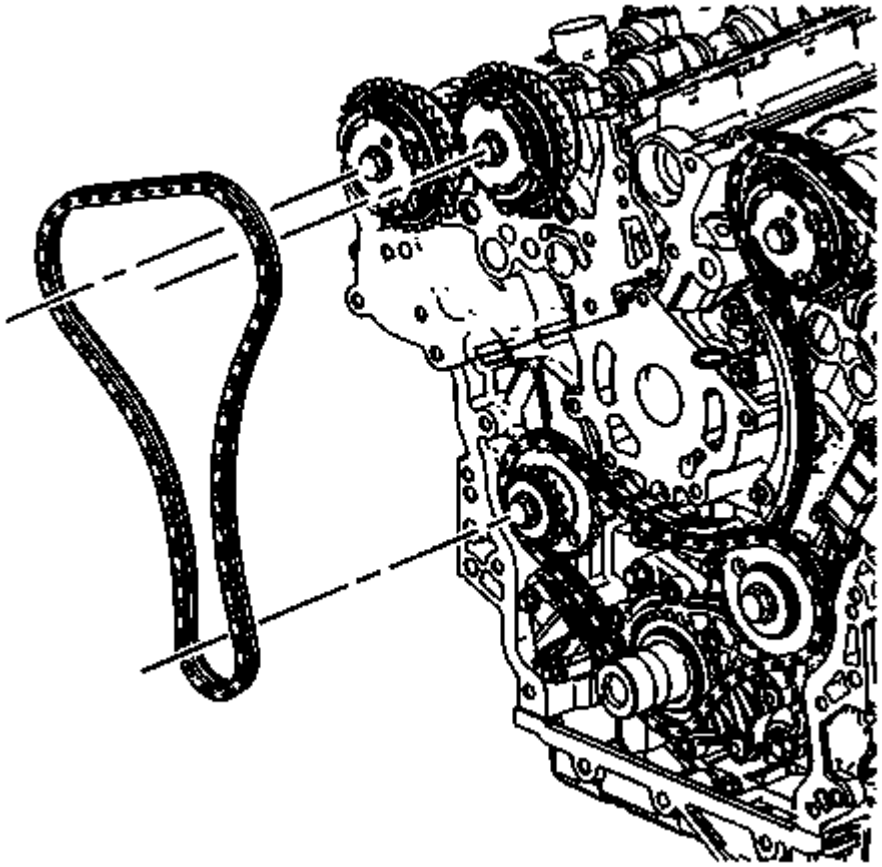

Fig. 112: View Of Right Bank Secondary Camshaft Drive Chain
Courtesy of GENERAL MOTORS COMPANY

5. Remove the right bank secondary camshaft drive chain. Refer to **Secondary Camshaft Intermediate Drive Chain Removal - Right Side** .

Installation Procedure

1. Ensure the stage 1 camshaft timing is correct. Refer to **Setting Camshaft Timing**.

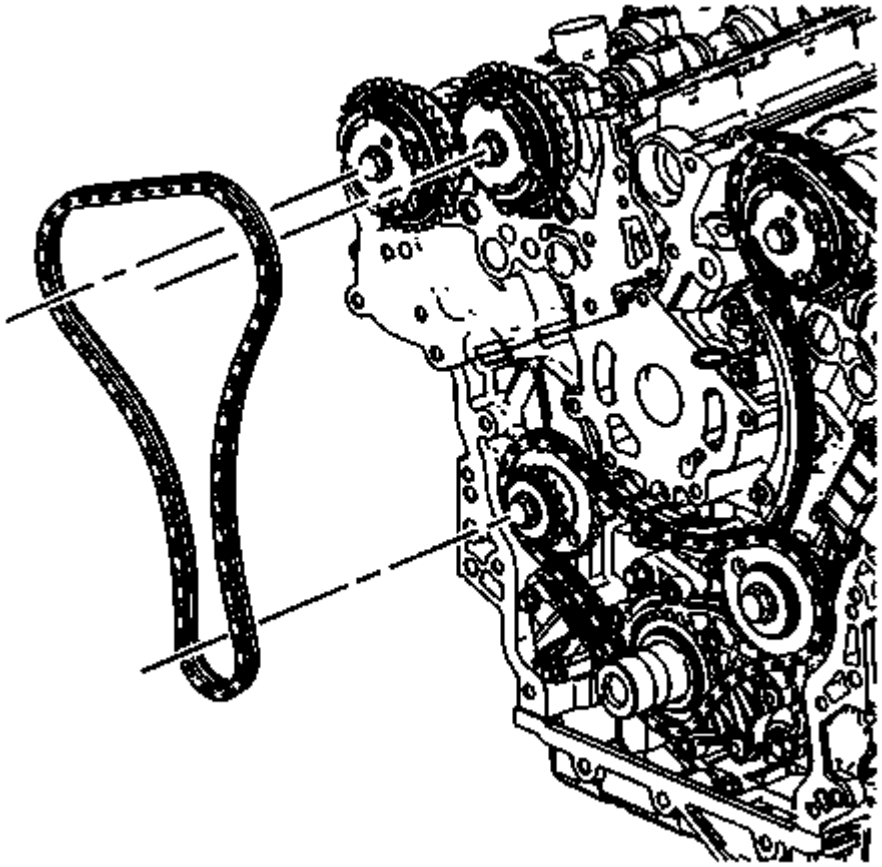

Fig. 113: View Of Right Bank Secondary Camshaft Drive Chain
Courtesy of GENERAL MOTORS COMPANY

2. Install the right bank secondary camshaft drive chain. Refer to **Secondary Camshaft Intermediate Drive Chain Installation - Right Side** .
3. Install the right bank secondary camshaft drive chain guide. Refer to **Secondary Timing Chain Guide Installation - Right Side** .
4. Install the right bank secondary camshaft drive chain shoe. Refer to **Secondary Camshaft Drive Chain Shoe Installation - Right Side** .
5. Install the right bank secondary camshaft drive chain tensioner. Refer to **Secondary Timing Chain Tensioner Installation - Right Side** .
6. Install the engine front cover. Refer to **Engine Front Cover Replacement**.

SECONDARY CAMSHAFT INTERMEDIATE DRIVE CHAIN TENSIONER REPLACEMENT - LEFT SIDE

Removal Procedure

1. Remove the engine front cover. Refer to **Engine Front Cover Replacement**.

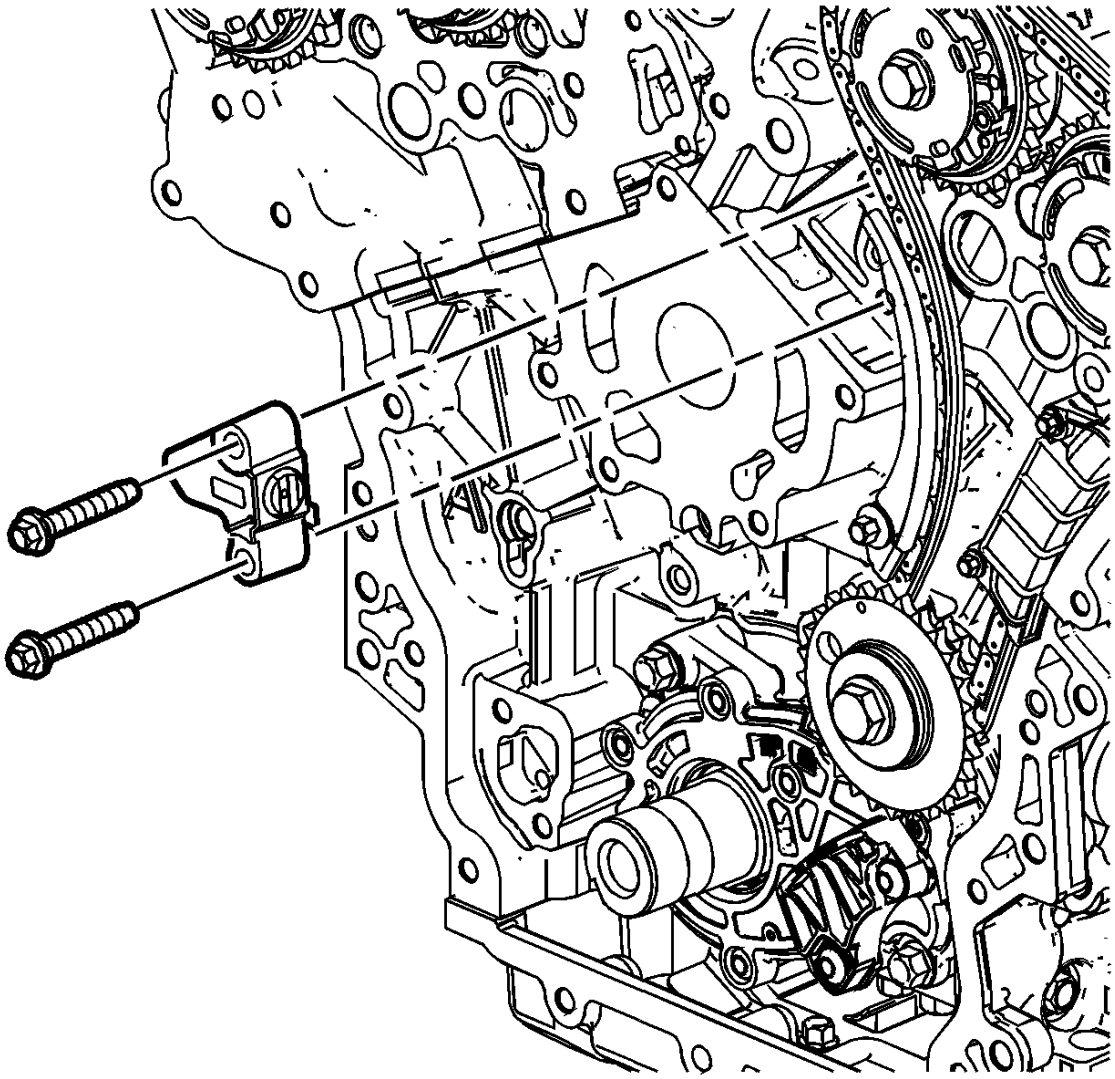

Fig. 114: Location Of Left Bank Secondary Camshaft Drive Chain Tensioner
Courtesy of GENERAL MOTORS COMPANY

2. Remove the left bank secondary camshaft drive chain tensioner. Refer to **Secondary Timing Chain Tensioner Removal - Left Side** .

Installation Procedure

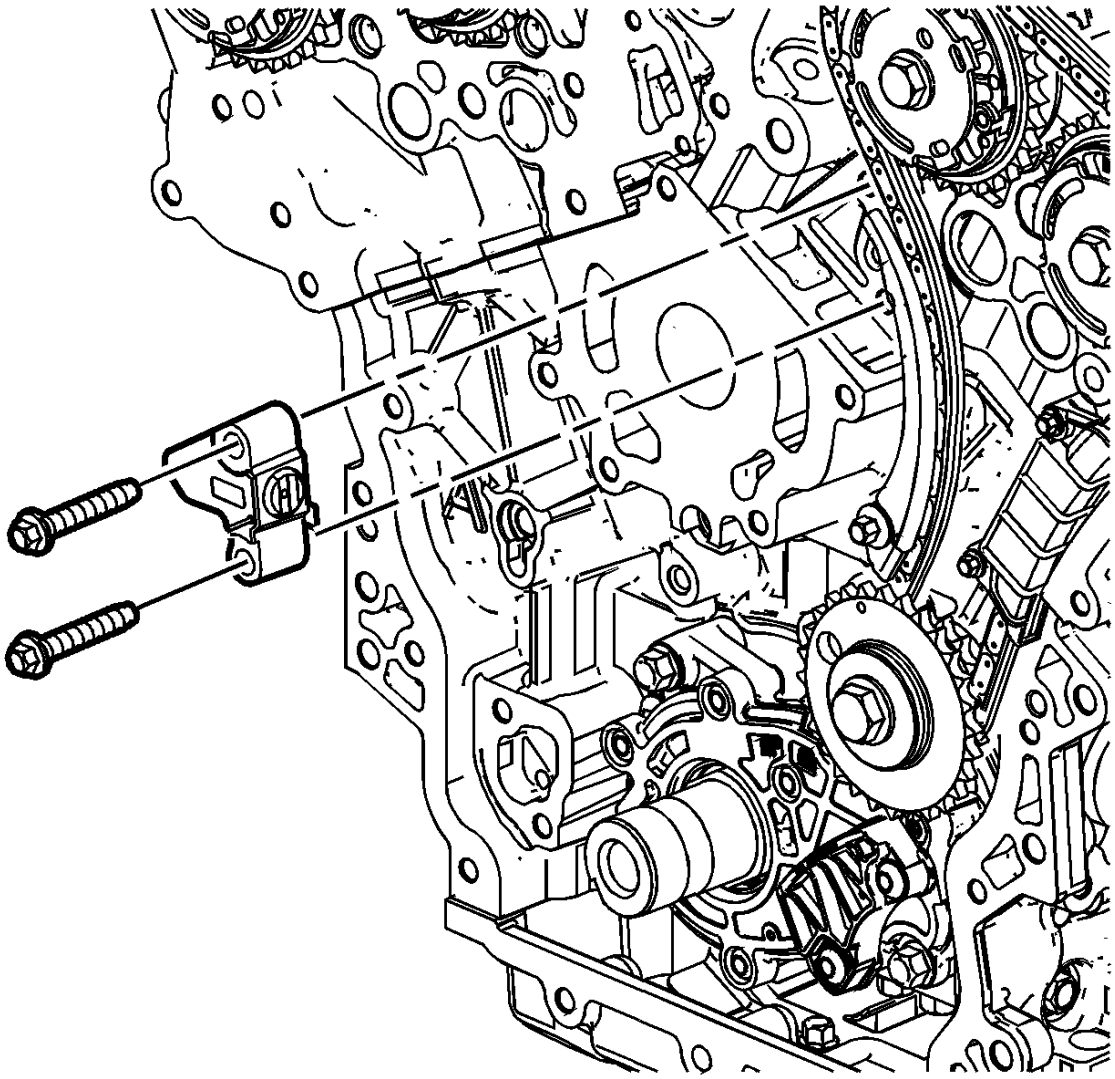

Fig. 115: Location Of Left Bank Secondary Camshaft Drive Chain Tensioner
Courtesy of GENERAL MOTORS COMPANY

1. Install the left bank secondary camshaft drive chain tensioner. Refer to **Secondary Timing Chain Tensioner Installation - Left Side** .
2. Install the engine front cover. Refer to **Engine Front Cover Replacement**.

SECONDARY CAMSHAFT INTERMEDIATE DRIVE CHAIN TENSIONER REPLACEMENT - RIGHT SIDE

Removal Procedure

1. Remove the engine front cover. Refer to **Engine Front Cover Replacement**.

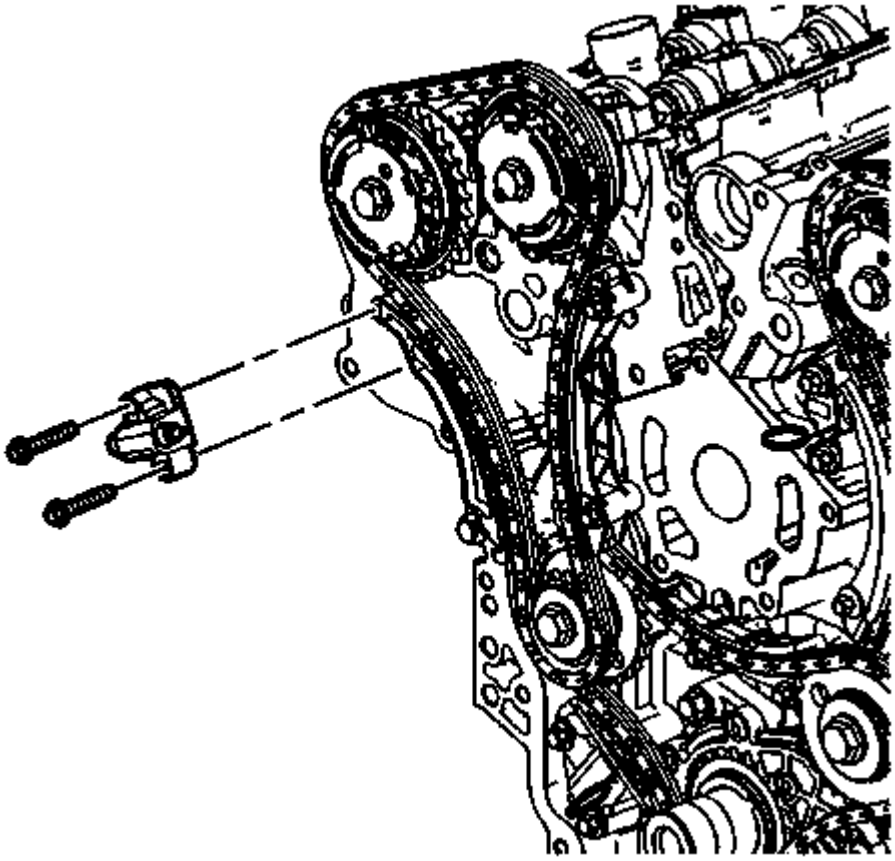

Fig. 116: View Of Right Bank Secondary Camshaft Drive Chain Tensioner
Courtesy of GENERAL MOTORS COMPANY

2. Remove the right bank secondary camshaft drive chain tensioner. Refer to **Secondary Timing Chain Tensioner Removal - Right Side** .

Installation Procedure

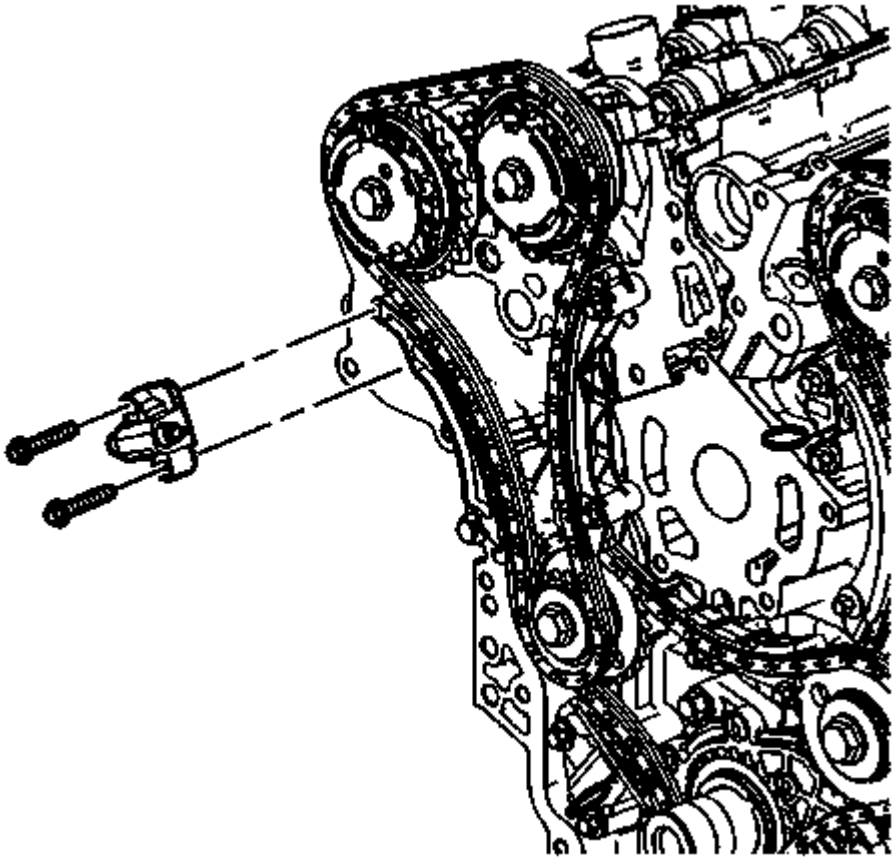

Fig. 117: View Of Right Bank Secondary Camshaft Drive Chain Tensioner
Courtesy of GENERAL MOTORS COMPANY

1. Install the right bank secondary camshaft drive chain tensioner. Refer to **Secondary Timing Chain Tensioner Installation - Right Side** .
2. Install the engine front cover. Refer to **Engine Front Cover Replacement**.

SECONDARY TIMING CHAIN TENSIONER SHOE REPLACEMENT - LEFT SIDE

Removal Procedure

1. Remove the engine front cover. Refer to **Engine Front Cover Replacement**.

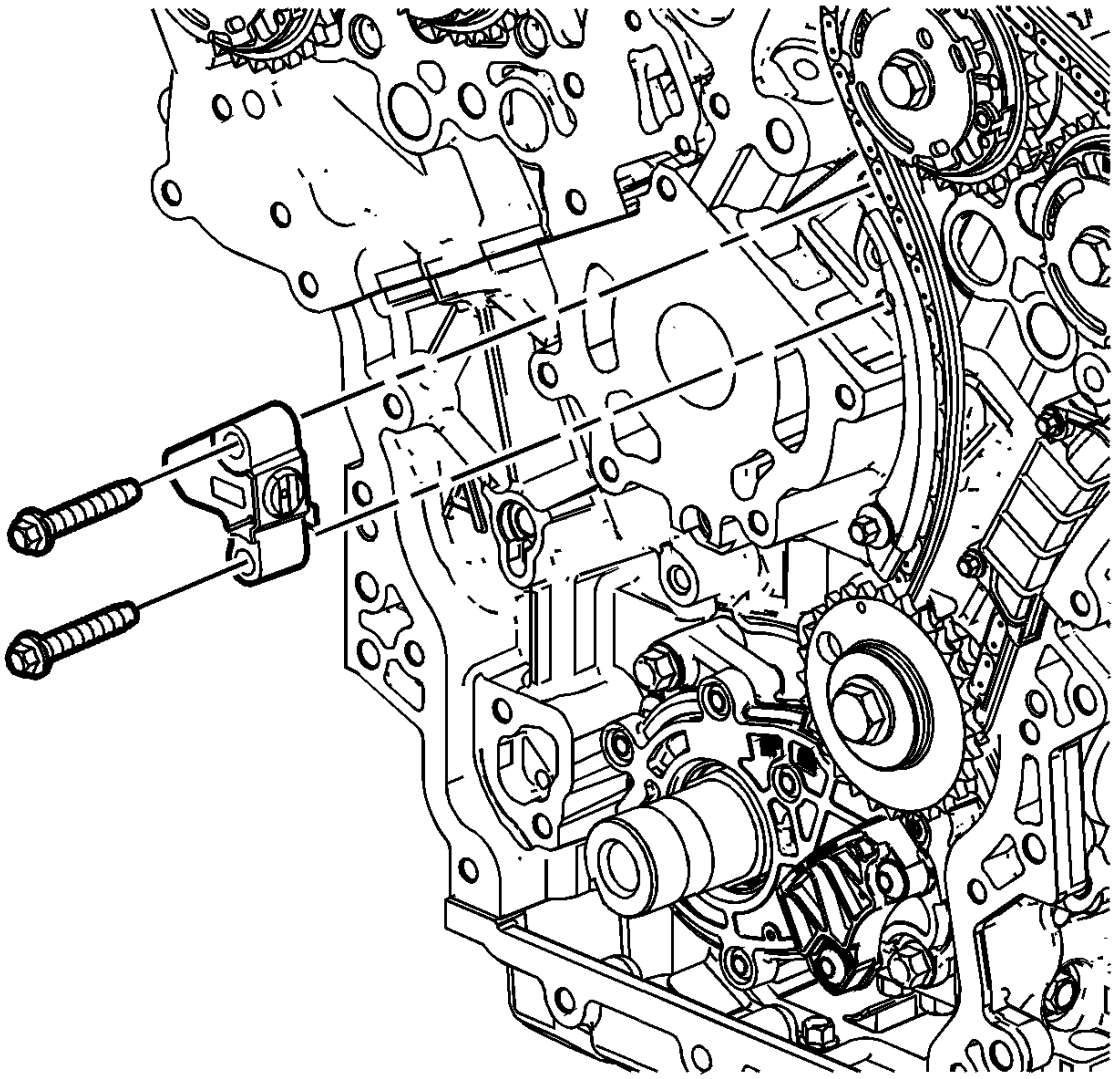

Fig. 118: Location Of Left Bank Secondary Camshaft Drive Chain Tensioner
Courtesy of GENERAL MOTORS COMPANY

2. Remove the left bank secondary camshaft drive chain tensioner. Refer to **Secondary Timing Chain Tensioner Removal - Left Side** .

Installation Procedure

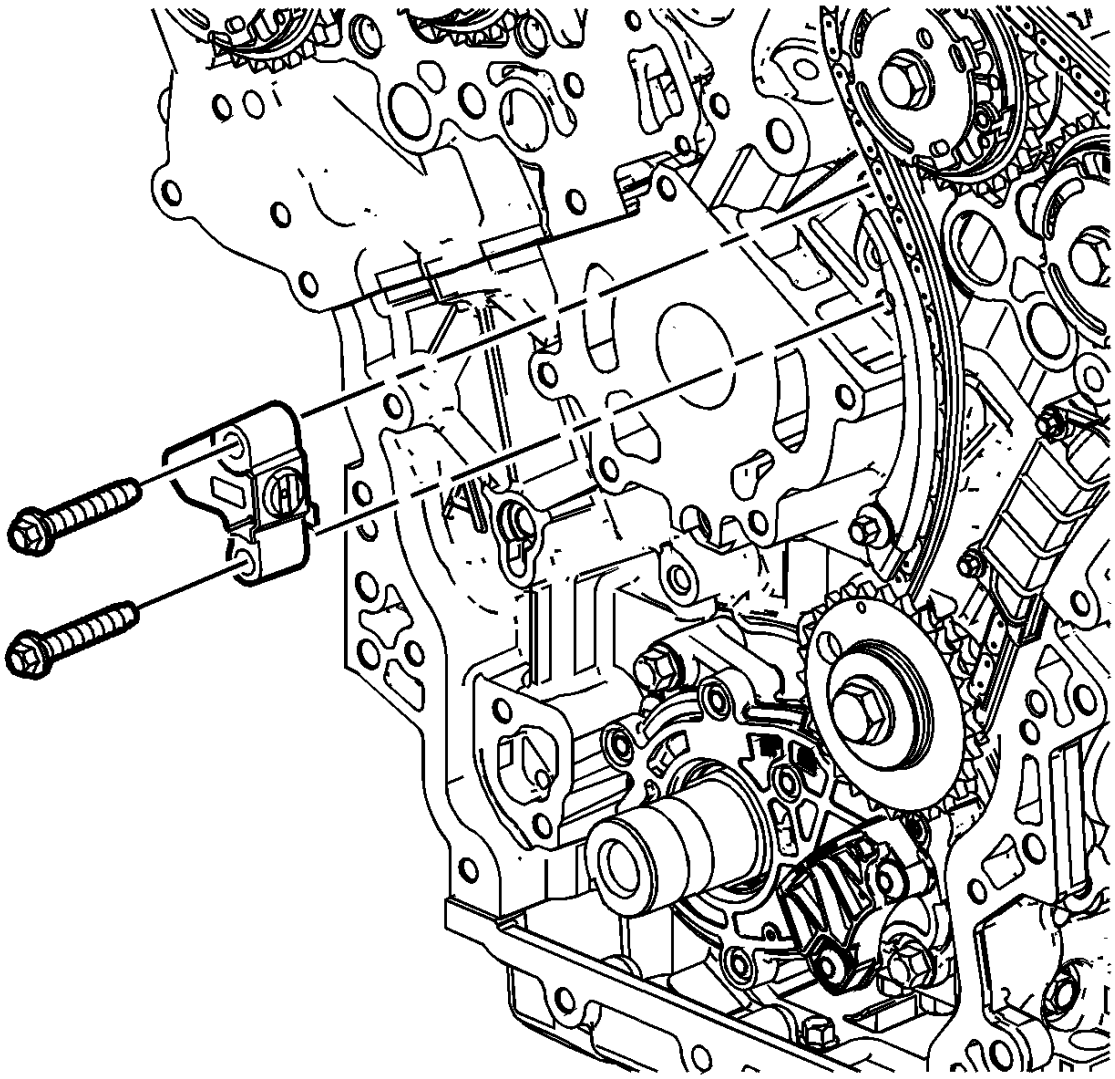

Fig. 119: Location Of Left Bank Secondary Camshaft Drive Chain Tensioner
Courtesy of GENERAL MOTORS COMPANY

1. Install the left bank secondary camshaft drive chain tensioner. Refer to **Secondary Timing Chain Tensioner Installation - Left Side** .
2. Install the engine front cover. Refer to **Engine Front Cover Replacement**.

SECONDARY TIMING CHAIN TENSIONER SHOE REPLACEMENT - RIGHT SIDE

Removal Procedure

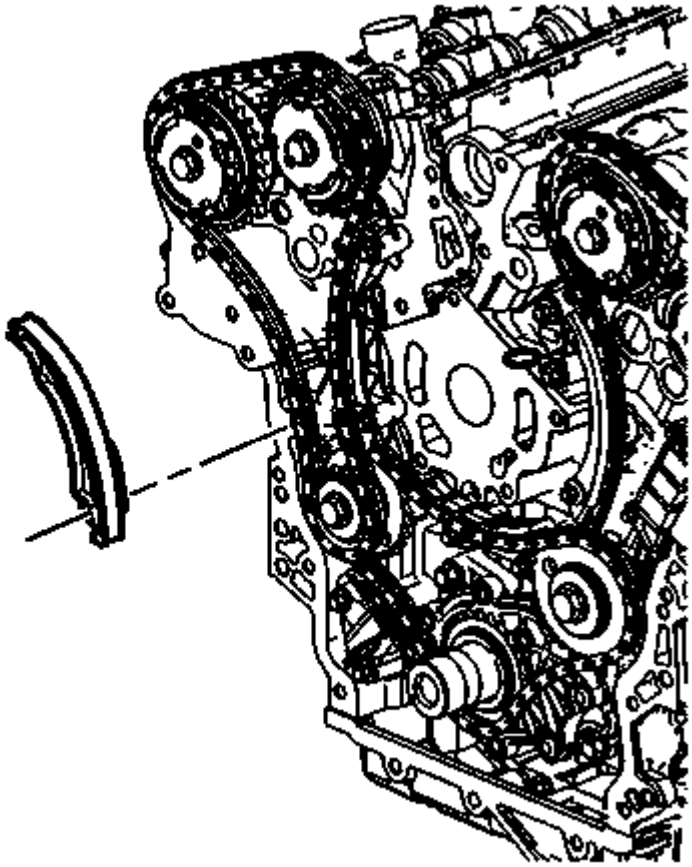

Fig. 120: View Of Right Secondary Camshaft Drive Chain Shoe
Courtesy of GENERAL MOTORS COMPANY

1. Remove the engine front cover. Refer to **Engine Front Cover Replacement**.
2. Remove the right bank secondary camshaft drive chain tensioner. Refer to **Secondary Timing Chain Tensioner Removal - Right Side** .
3. Remove the right bank secondary camshaft drive chain shoe. Refer to **Secondary Camshaft Drive Chain Shoe Removal - Right Side** .

Installation Procedure

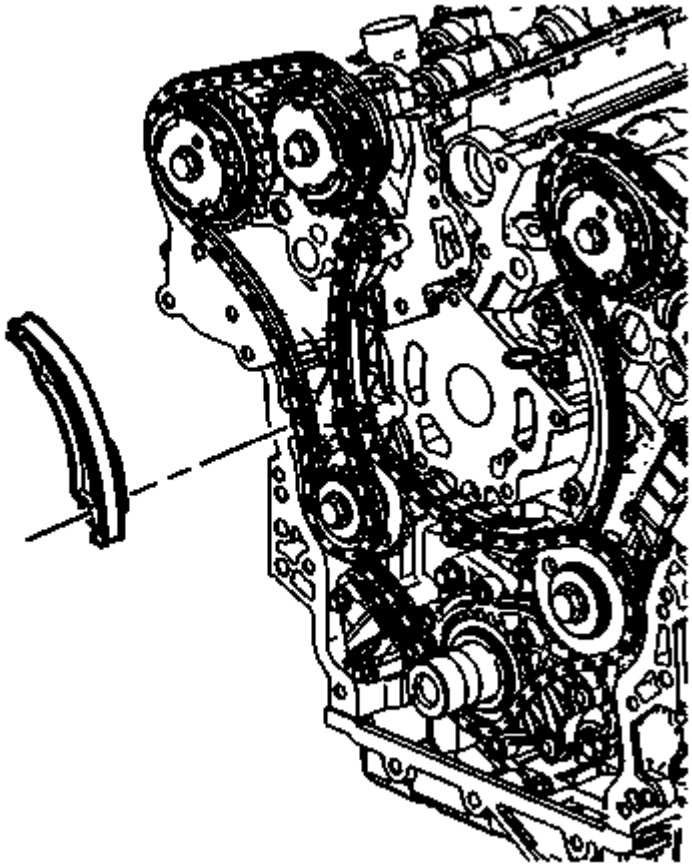

Fig. 121: View Of Right Secondary Camshaft Drive Chain Shoe
Courtesy of GENERAL MOTORS COMPANY

1. Install the right bank secondary camshaft drive chain shoe. Refer to **Secondary Camshaft Drive Chain Shoe Installation - Right Side** .
2. Install the right bank secondary camshaft drive chain tensioner. Refer to **Secondary Timing Chain Tensioner Installation - Right Side** .
3. Install the engine front cover. Refer to **Engine Front Cover Replacement**.

SECONDARY TIMING CHAIN GUIDE REPLACEMENT - LEFT SIDE

Removal Procedure

1. Remove the engine front cover. Refer to **Engine Front Cover Replacement**.
2. Remove the left bank secondary camshaft drive chain tensioner. Refer to **Secondary Timing Chain Tensioner Removal - Left Side** .

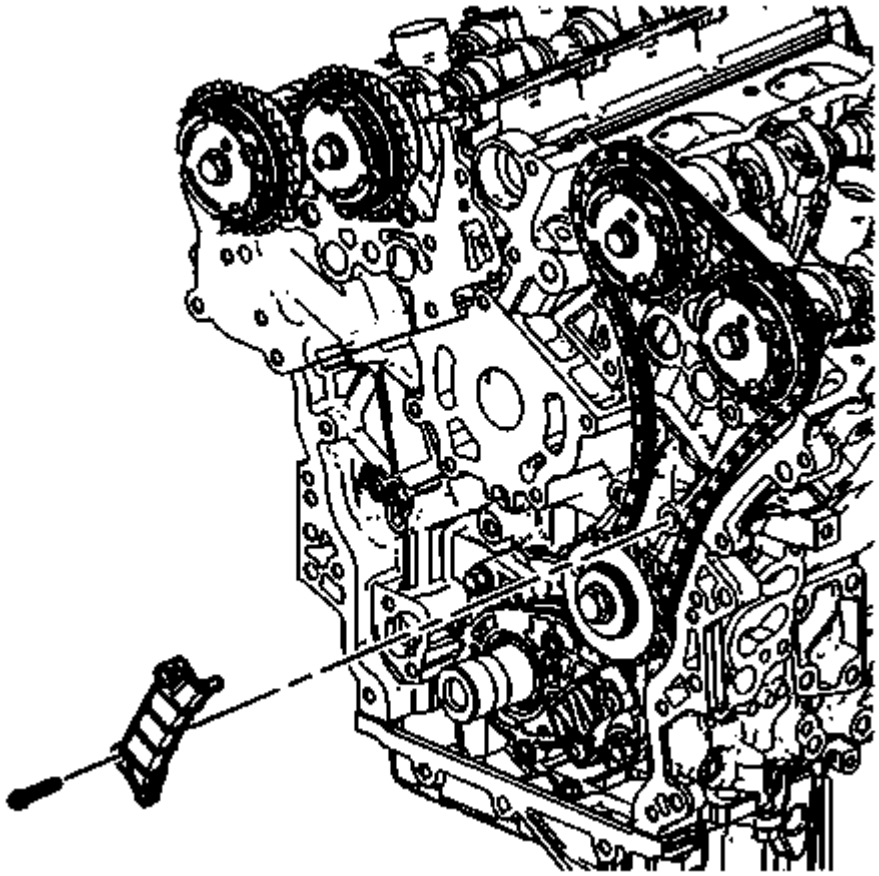

Fig. 122: View Of Left Bank Secondary Camshaft Drive Chain Guide
Courtesy of GENERAL MOTORS COMPANY

3. Remove the left bank secondary camshaft drive chain guide. Refer to **Secondary Timing Chain Guide Removal - Left Side** .

Installation Procedure

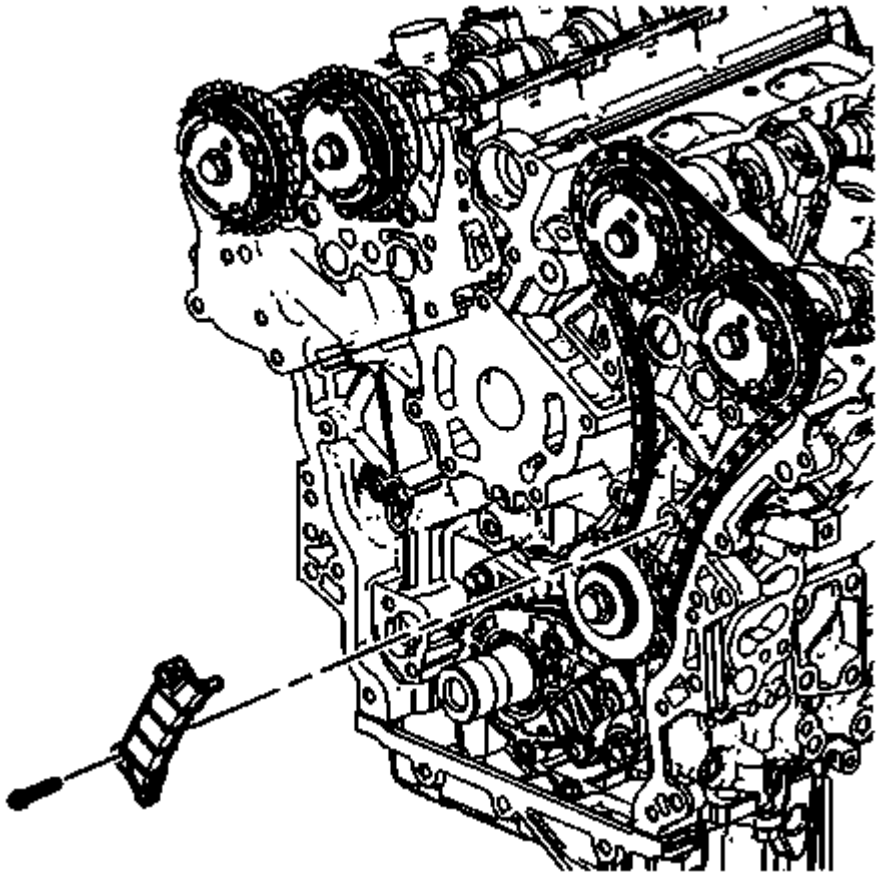

Fig. 123: View Of Left Bank Secondary Camshaft Drive Chain Guide
Courtesy of GENERAL MOTORS COMPANY

1. Install the left bank secondary camshaft drive chain guide. Refer to **Secondary Timing Chain Guide Installation - Left Side** .
2. Install the left bank secondary camshaft drive chain tensioner. Refer to **Secondary Timing Chain Tensioner Installation - Left Side** .
3. Install the engine front cover. Refer to **Engine Front Cover Replacement**.

SECONDARY TIMING CHAIN GUIDE REPLACEMENT - RIGHT SIDE

Removal Procedure

1. Remove the engine front cover. Refer to **Engine Front Cover Replacement**.
2. Remove the right bank secondary camshaft drive chain tensioner. Refer to **Secondary Timing Chain Tensioner Removal - Right Side** .

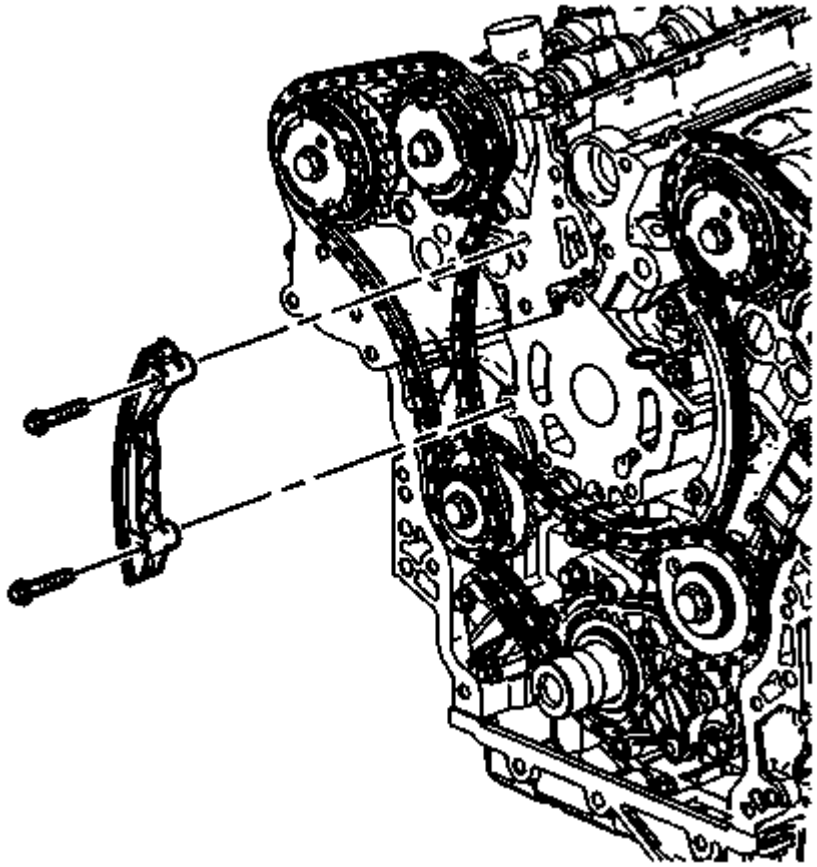

Fig. 124: View Of Right Secondary Camshaft Drive Chain Guide & Bolts
Courtesy of GENERAL MOTORS COMPANY

3. Remove the right bank secondary camshaft drive chain guide. Refer to **Secondary Timing Chain Guide Removal - Right Side** .

Installation Procedure

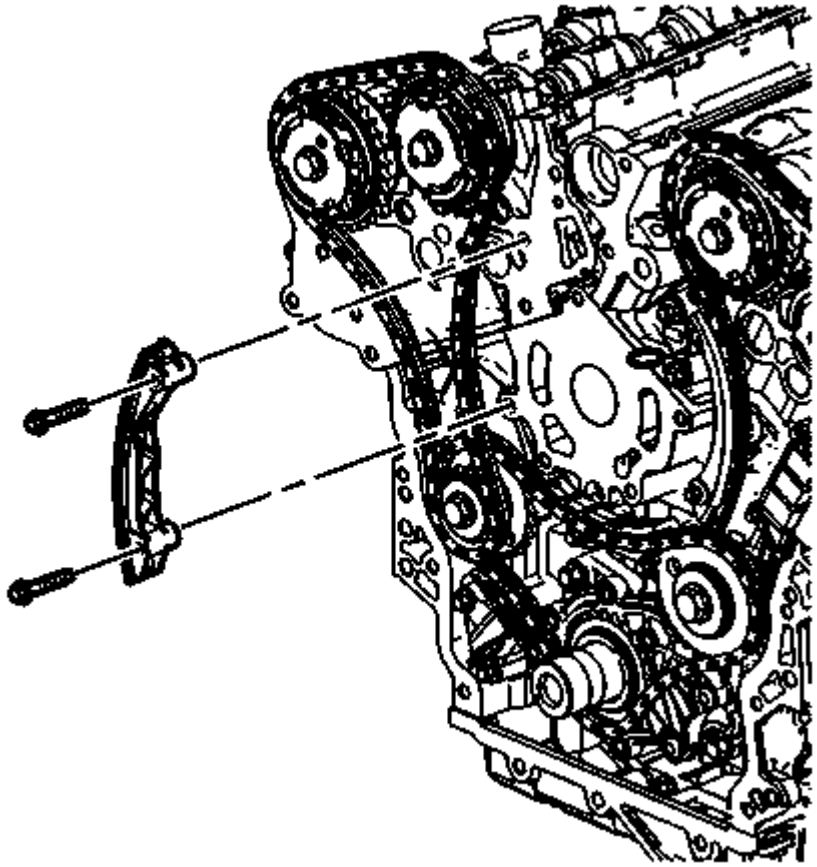

Fig. 125: View Of Right Secondary Camshaft Drive Chain Guide & Bolts
Courtesy of GENERAL MOTORS COMPANY

1. Install the right bank secondary camshaft drive chain guide. Refer to **Secondary Timing Chain Guide Installation - Right Side** .
2. Install the right bank secondary camshaft drive chain tensioner. Refer to **Secondary Timing Chain Tensioner Installation - Right Side** .
3. Install the engine front cover. Refer to **Engine Front Cover Replacement**.

PRIMARY CAMSHAFT DRIVE CHAIN AND SPROCKETS REPLACEMENT

Removal Procedure

1. Remove the engine front cover. Refer to **Engine Front Cover Replacement**.
2. Remove the right bank secondary camshaft drive chain tensioner. Refer to **Secondary Timing Chain Tensioner Removal - Right Side** .
3. Remove the right bank secondary camshaft drive chain shoe. Refer to **Secondary Camshaft Drive Chain Shoe Removal - Right Side** .
4. Remove the right bank secondary camshaft drive chain guide. Refer to **Secondary Timing Chain Guide Removal - Right Side** .
5. Remove the right bank secondary camshaft drive chain. Refer to **Secondary Camshaft Intermediate Drive Chain Removal - Right Side** .

6. Remove the primary camshaft drive chain tensioner. Refer to **Primary Camshaft Intermediate Drive Chain Tensioner Removal** .
7. Remove the primary camshaft drive chain upper guide. **Primary Timing Chain Guide Removal - Upper** .

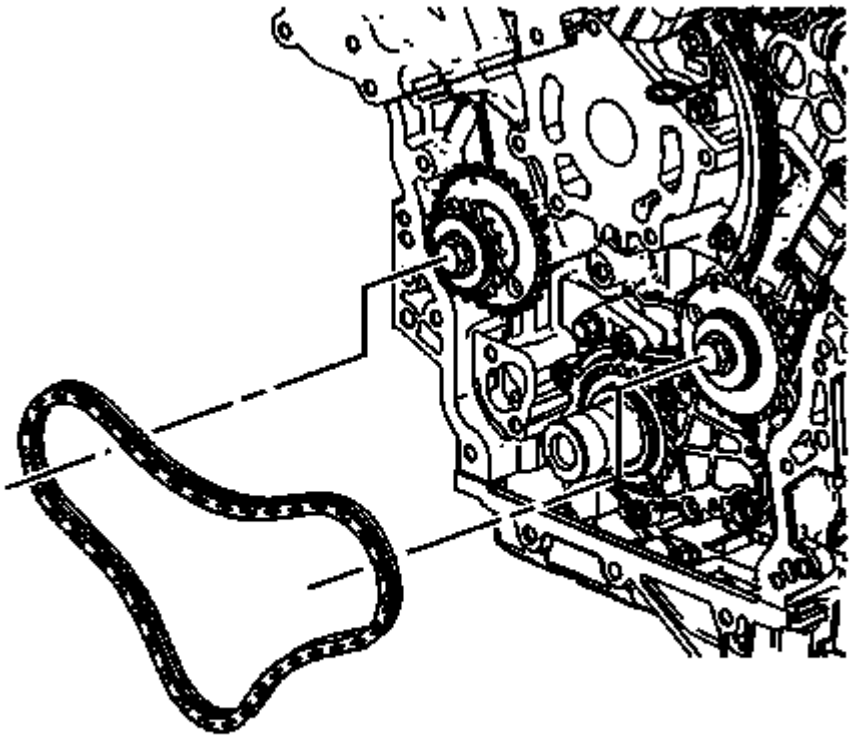

Fig. 126: View Of Primary Camshaft Timing Chain
Courtesy of GENERAL MOTORS COMPANY

8. Remove the primary camshaft timing chain. Refer to **Secondary Camshaft Intermediate Drive Chain Removal - Right Side** .

Installation Procedure

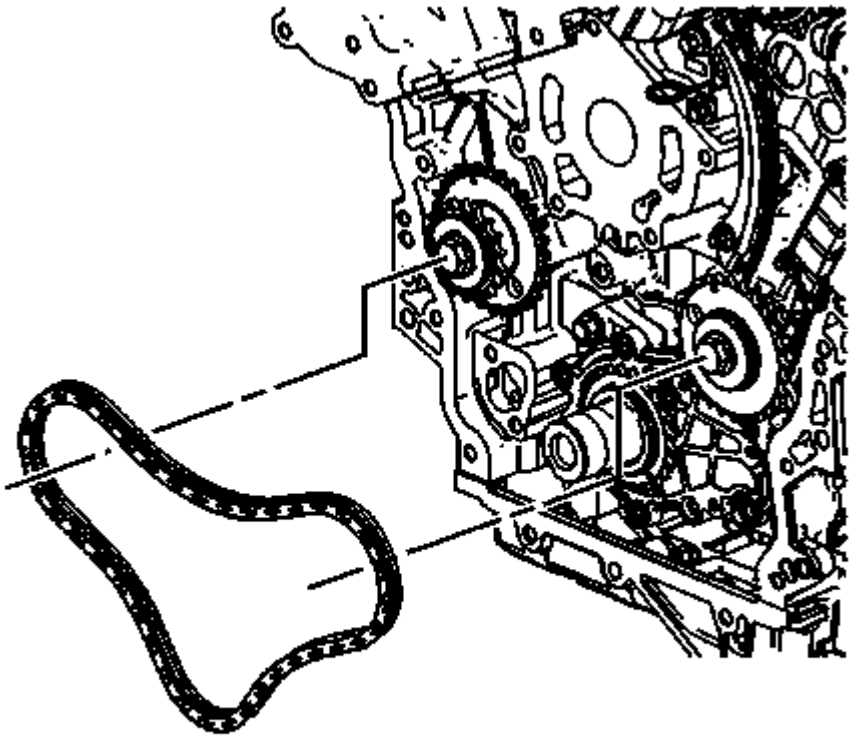

Fig. 127: View Of Primary Camshaft Timing Chain
Courtesy of GENERAL MOTORS COMPANY

1. Install the primary camshaft timing chain. Refer to **Primary Camshaft Intermediate Drive Chain Installation** .
2. Install the primary upper camshaft drive chain guide. Refer to **Primary Timing Chain Guide Installation - Upper** .
3. Install the primary camshaft drive chain tensioner. Refer to **Primary Camshaft Intermediate Drive Chain Tensioner Installation** .
4. Install the right bank secondary camshaft drive chain. Refer to **Secondary Camshaft Intermediate Drive Chain Installation - Right Side** .
5. Install the right bank secondary camshaft drive chain guide. Refer to **Secondary Timing Chain Guide Installation - Right Side** .
6. Install the right bank secondary camshaft drive chain shoe. Refer to **Secondary Camshaft Drive Chain Shoe Installation - Right Side** .
7. Install the right bank secondary camshaft drive chain tensioner. Refer to **Secondary Timing Chain Tensioner Installation - Right Side** .
8. Install the engine front cover. Refer to **Engine Front Cover Replacement**.

TIMING CHAIN IDLER SPROCKET REPLACEMENT - LEFT SIDE

Removal Procedure

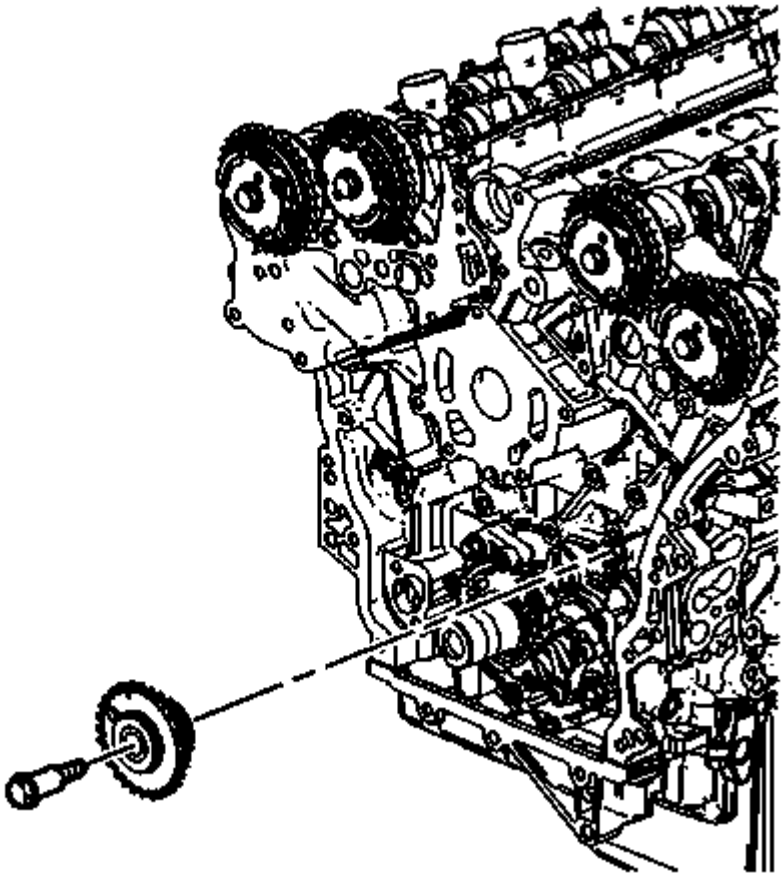

Fig. 128: View Of Left Camshaft Intermediate Drive Chain Idler Sprocket
Courtesy of GENERAL MOTORS COMPANY

1. Remove the engine front cover. Refer to **Engine Front Cover Replacement**.
2. Remove the right bank secondary camshaft drive chain tensioner. Refer to **Secondary Timing Chain Tensioner Removal - Right Side** .
3. Remove the right bank secondary camshaft drive chain shoe. Refer to **Secondary Camshaft Drive Chain Shoe Removal - Right Side** .
4. Remove the right bank secondary camshaft drive chain guide. Refer to **Secondary Timing Chain Guide Removal - Right Side** .
5. Remove the right bank secondary camshaft drive chain. Refer to **Secondary Camshaft Intermediate Drive Chain Removal - Right Side** .
6. Remove the primary camshaft drive chain tensioner. Refer to **Primary Camshaft Intermediate Drive Chain Tensioner Removal** .
7. Remove the primary upper camshaft drive chain guide. Refer to **Primary Timing Chain Guide Removal - Upper** .
8. Remove the primary camshaft drive chain. Refer to **Primary Camshaft Intermediate Drive Chain Removal** .
9. Remove the right bank camshaft intermediate drive chain idler. Refer to **Timing Chain Idler Sprocket**

Removal - Right Side .

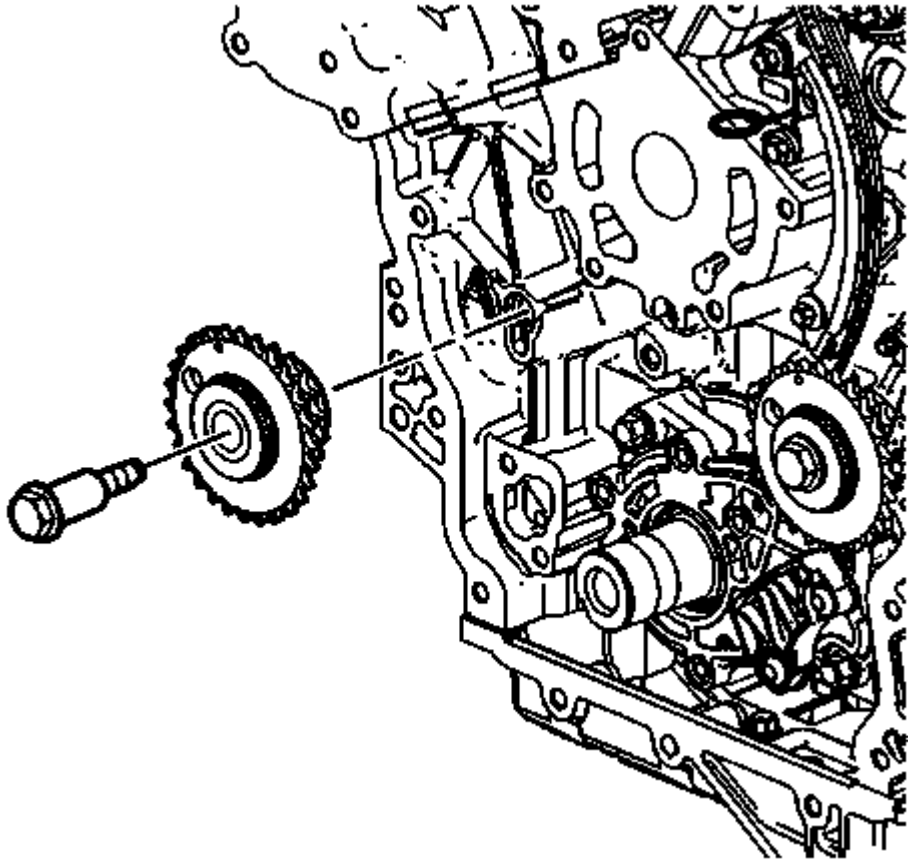

Fig. 129: View Of Right & Left Camshaft Intermediate Drive Chain Idlers
Courtesy of GENERAL MOTORS COMPANY

10. If you are servicing the left bank camshaft intermediate drive chain idler, perform the following steps:
    1. Remove the left bank secondary camshaft drive chain tensioner. Refer to **Secondary Timing Chain Tensioner Removal - Left Side** .
    2. Remove the left bank secondary camshaft drive chain shoe. Refer to **Secondary Camshaft Drive Chain Shoe Removal - Left Side** .
    3. Remove the left bank secondary camshaft drive chain guide. Refer to **Secondary Timing Chain Guide Removal - Left Side** .
    4. Remove the left bank secondary camshaft drive chain. Refer to **Secondary Camshaft Intermediate Drive Chain Removal - Left Side** .
    5. Remove the left bank camshaft intermediate drive chain idler. Refer to **Timing Chain Idler Sprocket Removal - Left Side** .

Installation Procedure

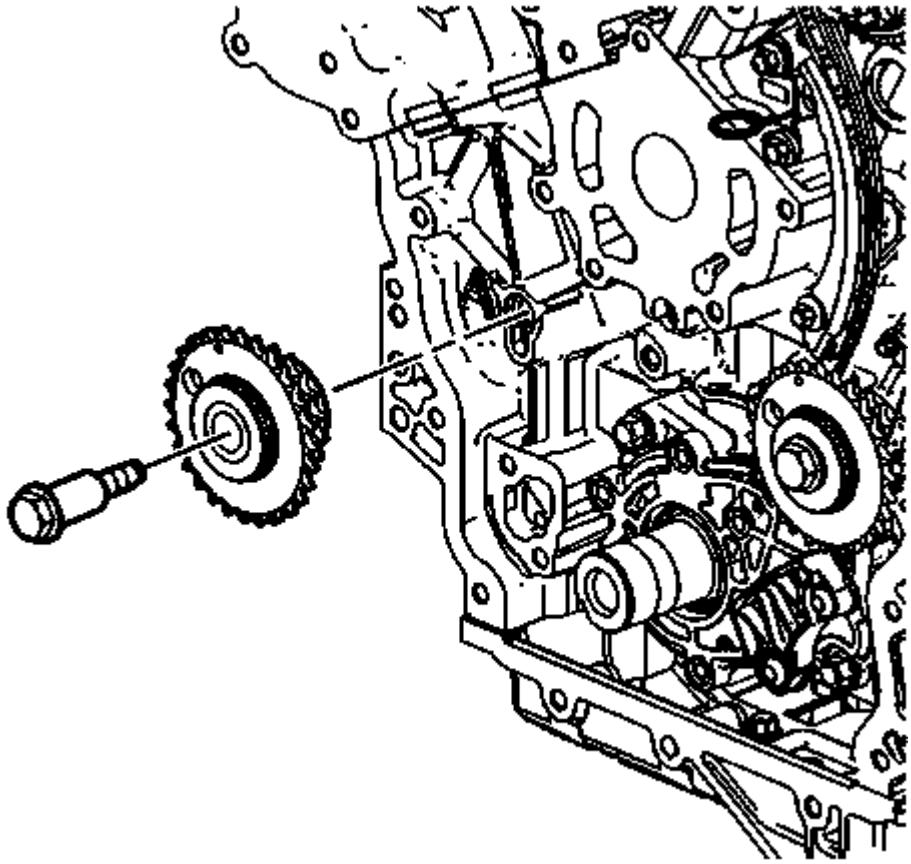

Fig. 130: View Of Right & Left Camshaft Intermediate Drive Chain Idlers
Courtesy of GENERAL MOTORS COMPANY

1. If you are servicing the left bank idler sprocket, perform the following steps:
    1. Install the left bank camshaft intermediate drive chain idler. Refer to **Timing Chain Idler Sprocket Installation - Left Side** .
    2. Install the left bank secondary camshaft drive chain. Refer to **Secondary Camshaft Intermediate Drive Chain Installation - Left Side** .
    3. Install the left bank secondary camshaft drive chain guide. Refer to **Secondary Timing Chain Guide Installation - Left Side** .
    4. Install the left bank secondary camshaft drive chain shoe. Refer to **Secondary Camshaft Drive Chain Shoe Installation - Left Side** .
    5. Install the left bank secondary camshaft drive chain tensioner. Refer to **Secondary Timing Chain Tensioner Installation - Left Side** .

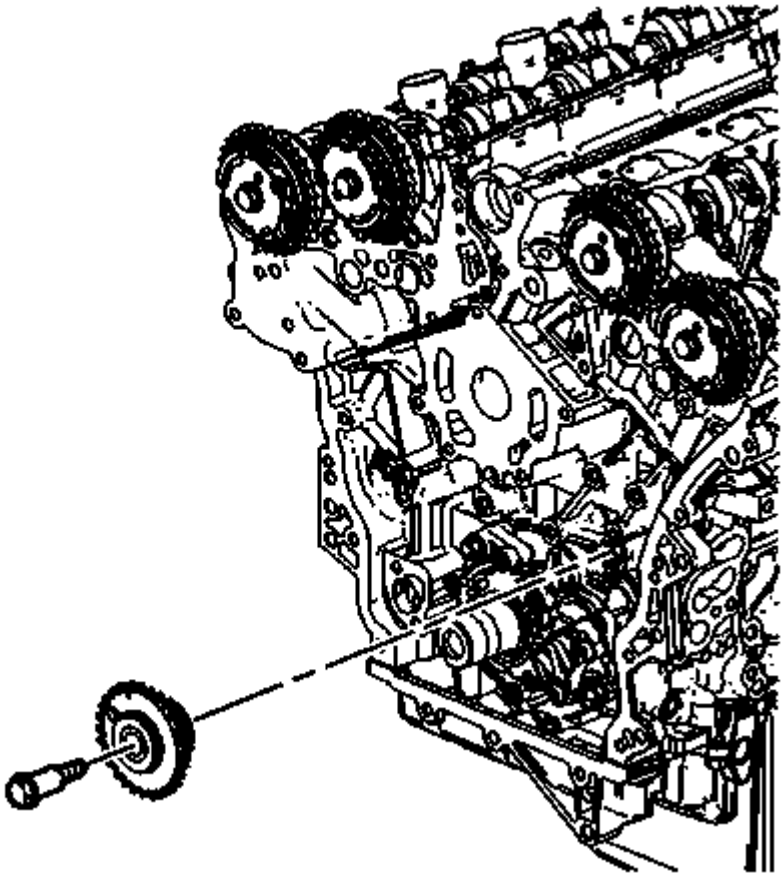

Fig. 131: View Of Left Camshaft Intermediate Drive Chain Idler Sprocket
Courtesy of GENERAL MOTORS COMPANY

2. Install the right bank camshaft intermediate drive chain idler. Refer to **Timing Chain Idler Sprocket Installation - Right Side** .
3. Install the primary camshaft drive chain. Refer to **Primary Camshaft Intermediate Drive Chain Installation** .
4. Install the primary upper camshaft drive chain guide. Refer to **Primary Timing Chain Guide Installation - Upper** .
5. Install the primary camshaft drive chain tensioner. Refer to **Primary Camshaft Intermediate Drive Chain Tensioner Installation** .
6. Install the right bank secondary camshaft drive chain. Refer to **Secondary Camshaft Intermediate Drive Chain Installation - Right Side** .
7. Install the right bank secondary camshaft drive chain guide. Refer to **Secondary Timing Chain Guide Installation - Right Side** .
8. Install the right bank secondary camshaft drive chain shoe. Refer to **Secondary Camshaft Drive Chain Shoe Installation - Right Side** .
9. Install the right bank secondary camshaft drive chain tensioner. Refer to **Secondary Timing Chain Tensioner Installation - Right Side** .
10. Install the engine front cover. Refer to **Engine Front Cover Replacement**.

TIMING CHAIN IDLER SPROCKET REPLACEMENT - RIGHT SIDE

Removal Procedure

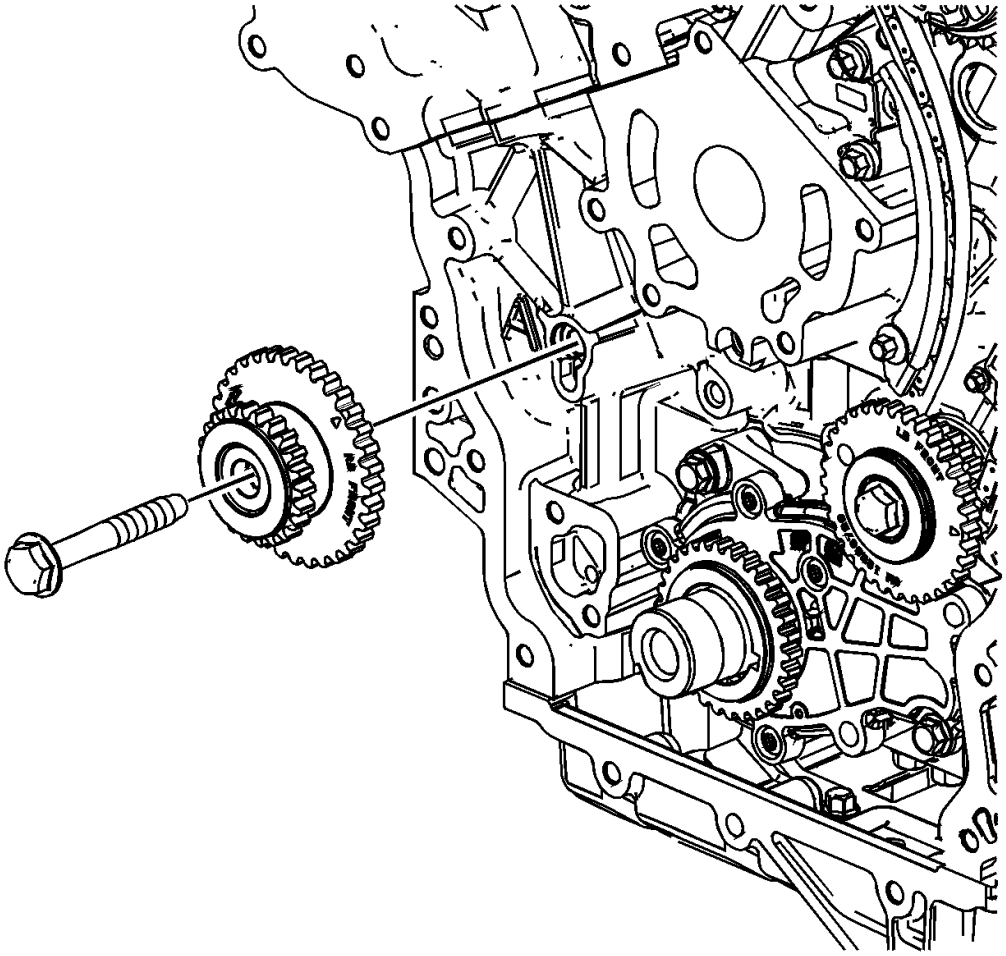

Fig. 132: Identifying Camshaft Intermediate Drive Chain Idler & Bolt
Courtesy of GENERAL MOTORS COMPANY

1. Remove the engine front cover. Refer to **Engine Front Cover Replacement**.
2. Remove the spark plugs in order to ease crankshaft/engine rotation. Refer to **Spark Plug Replacement** .
3. Remove the right bank secondary camshaft drive chain tensioner. Refer to **Secondary Timing Chain Tensioner Removal - Right Side** .
4. Remove the right bank secondary camshaft drive chain shoe. Refer to **Secondary Camshaft Drive Chain Shoe Removal - Right Side** .
5. Remove the right bank secondary camshaft drive chain guide. Refer to **Secondary Timing Chain Guide Removal - Right Side** .
6. Remove the right bank secondary camshaft drive chain. Refer to **Secondary Camshaft Intermediate Drive Chain Removal - Right Side** .
7. Remove the primary camshaft drive chain tensioner. Refer to **Primary Camshaft Intermediate Drive**

Chain Tensioner Removal .

8. Remove the primary upper camshaft drive chain guide. Refer to **Primary Timing Chain Guide Removal - Upper** .
9. Remove the primary camshaft drive chain. Refer to **Primary Camshaft Intermediate Drive Chain Removal** .
10. Remove the right bank camshaft intermediate drive chain idler. Refer to **Timing Chain Idler Sprocket Removal - Right Side** .

Installation Procedure

1. Ensure stage 1 camshaft timing is correct. Refer to **Setting Camshaft Timing**.

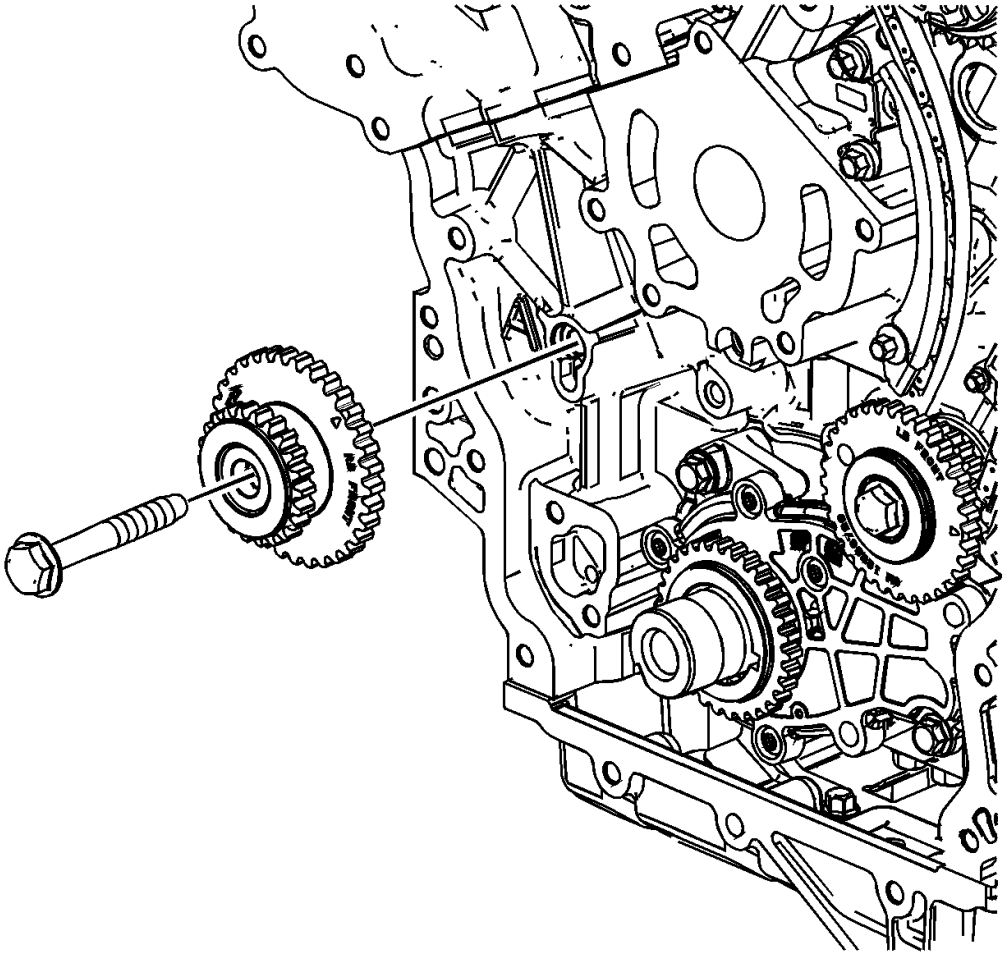

Fig. 133: Identifying Camshaft Intermediate Drive Chain Idler & Bolt
Courtesy of GENERAL MOTORS COMPANY

2. Install the right bank camshaft intermediate drive chain idler. Refer to **Timing Chain Idler Sprocket Installation - Right Side** .
3. Install the primary camshaft drive chain. Refer to **Primary Camshaft Intermediate Drive Chain**

Installation .

4. Install the primary upper camshaft drive chain guide. Refer to **Primary Timing Chain Guide Installation - Upper** .
5. Install the primary camshaft drive chain tensioner. Refer to **Primary Camshaft Intermediate Drive Chain Tensioner Installation** .
6. Install the right bank secondary camshaft drive chain. Refer to **Secondary Camshaft Intermediate Drive Chain Installation - Right Side** .
7. Install the right bank secondary camshaft drive chain guide. Refer to **Secondary Timing Chain Guide Installation - Right Side** .
8. Install the right bank secondary camshaft drive chain shoe. Refer to **Secondary Camshaft Drive Chain Shoe Installation - Right Side** .
9. Install the right bank secondary camshaft drive chain tensioner. Refer to **Secondary Timing Chain Tensioner Installation - Right Side** .
10. Install the spark plugs. Refer to **Spark Plug Replacement** .
11. Install the engine front cover. Refer to **Engine Front Cover Replacement**.

PRIMARY CAMSHAFT INTERMEDIATE DRIVE CHAIN TENSIONER REPLACEMENT

Removal Procedure

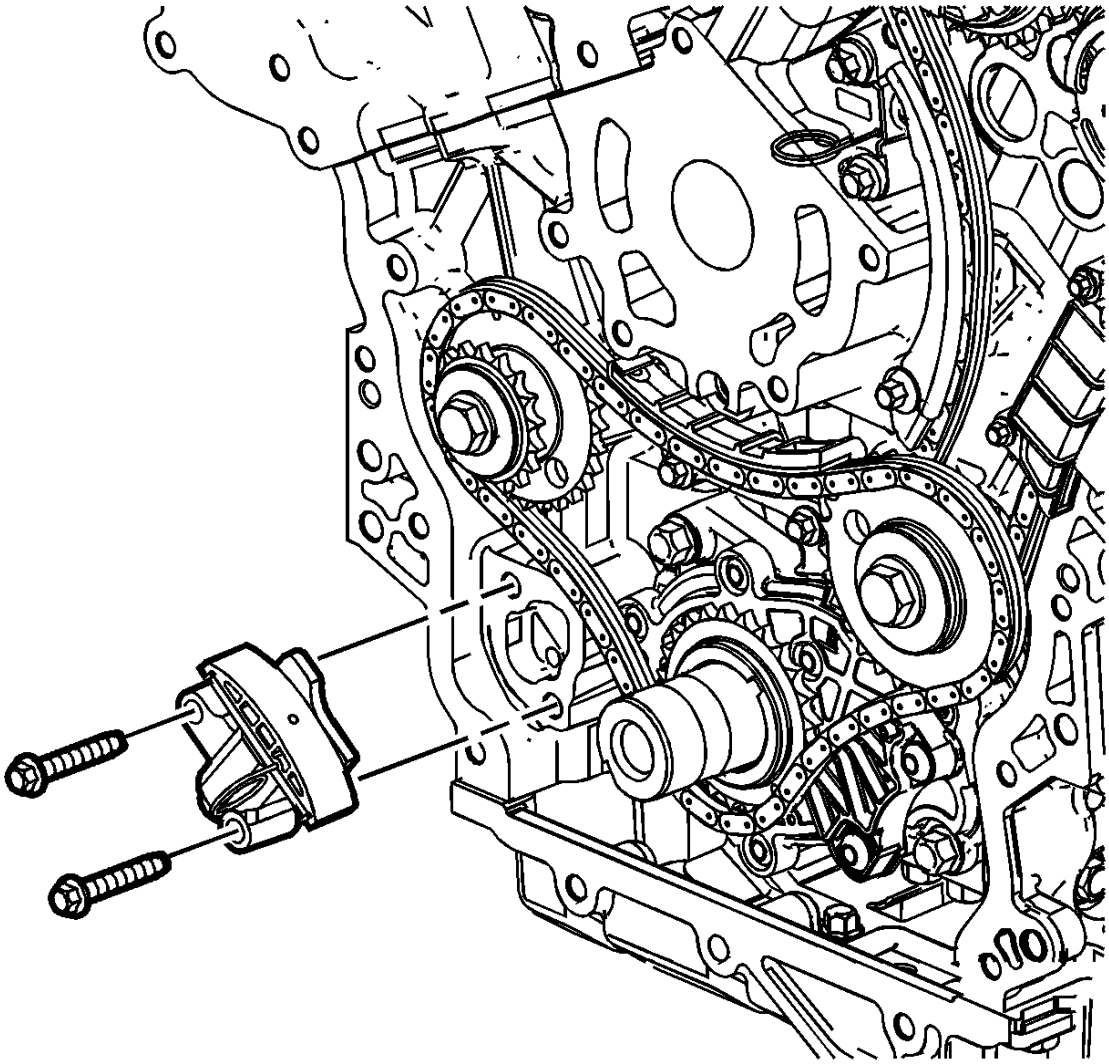

Fig. 134: View Of Primary Camshaft Drive Chain Tensioner
Courtesy of GENERAL MOTORS COMPANY

1. Remove the engine front cover. Refer to **Engine Front Cover Replacement**.

NOTE: **If the entire camshaft timing system is not in Stage 2, Timing Chain Alignment Diagram , mark the timing chain and sprockets in order to ensure proper reassembly.**

2. Remove the primary camshaft drive chain tensioner. Refer to **Primary Camshaft Intermediate Drive Chain Tensioner Removal** .

Installation Procedure

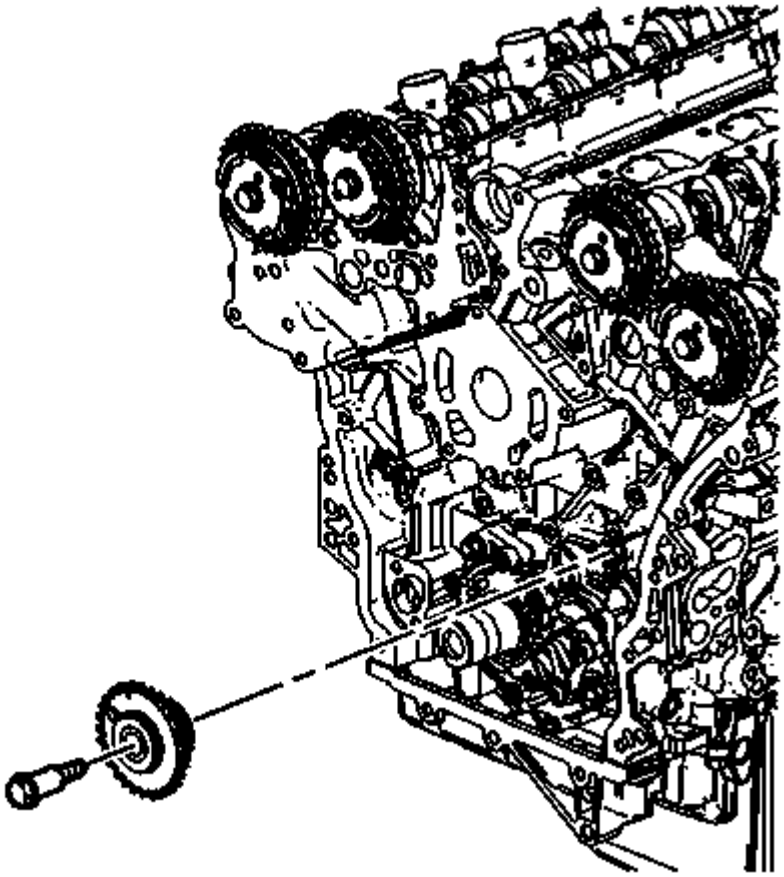

Fig. 135: View Of Primary Camshaft Drive Chain Tensioner
Courtesy of GENERAL MOTORS COMPANY

1. Install the primary camshaft drive chain tensioner. Refer to **Primary Camshaft Intermediate Drive Chain Tensioner Installation** .
2. Install the engine front cover. Refer to **Engine Front Cover Replacement**.

PRIMARY TIMING CHAIN GUIDE REPLACEMENT - LOWER

Removal Procedure

1. Remove the primary camshaft drive chain tensioner. Refer to **Primary Camshaft Intermediate Drive Chain Tensioner Replacement**.

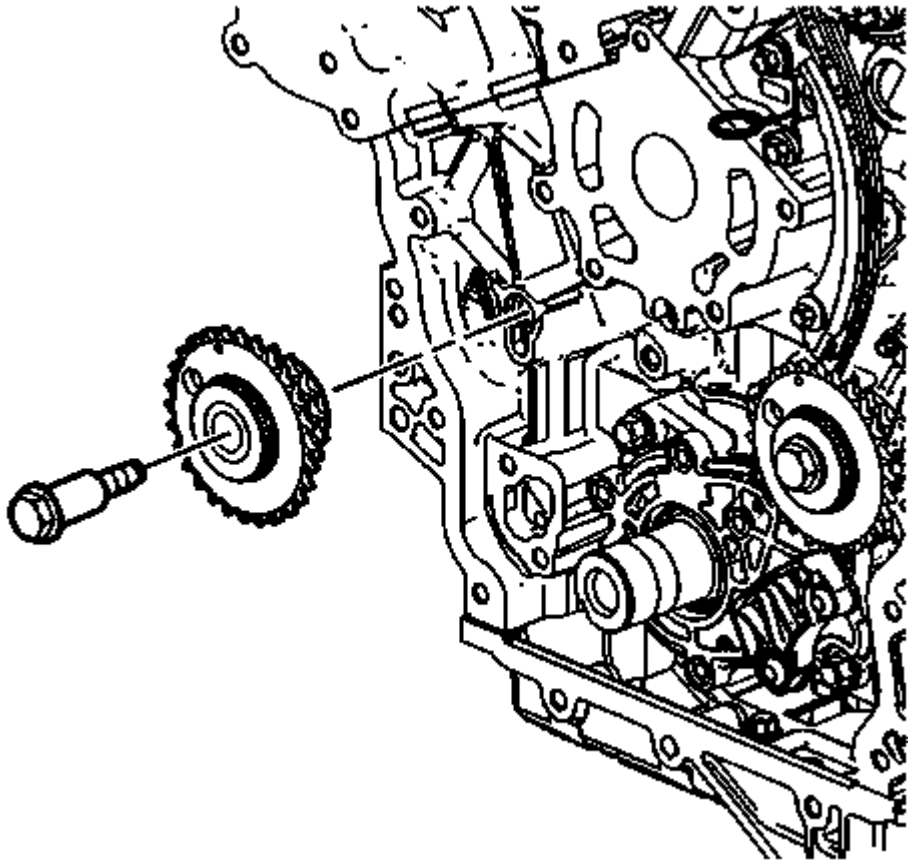

Fig. 136: View Of Primary Camshaft Drive Chain Lower Guide Bolts
Courtesy of GENERAL MOTORS COMPANY

2. Remove the primary camshaft drive chain lower guide bolts.
3. Remove the primary camshaft drive chain lower guide.

Installation Procedure

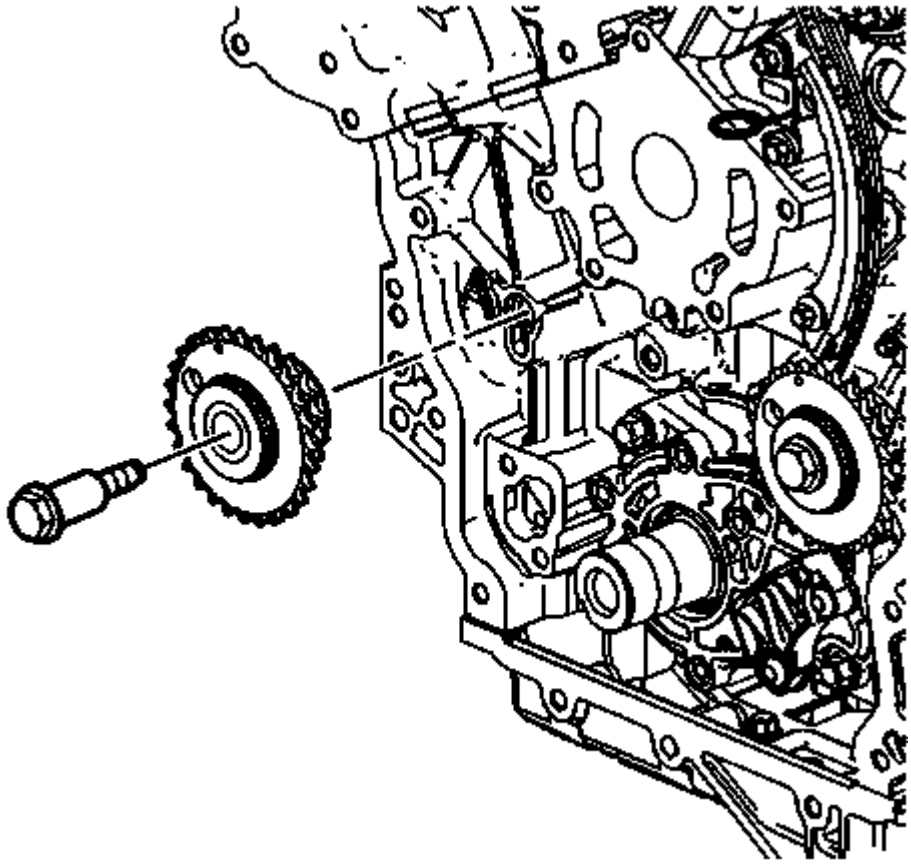

Fig. 137: View Of Primary Camshaft Drive Chain Lower Guide Bolts
Courtesy of GENERAL MOTORS COMPANY

1. Position the primary camshaft drive chain lower guide to the oil pump.

CAUTION: Refer to Fastener Caution .

2. Install the primary camshaft drive chain lower guide bolts and tighten to 23 N.m (17 lb ft).
3. Install the primary camshaft drive chain tensioner. Refer to **Primary Camshaft Intermediate Drive Chain Tensioner Replacement**.

PRIMARY TIMING CHAIN GUIDE REPLACEMENT - UPPER

Removal Procedure

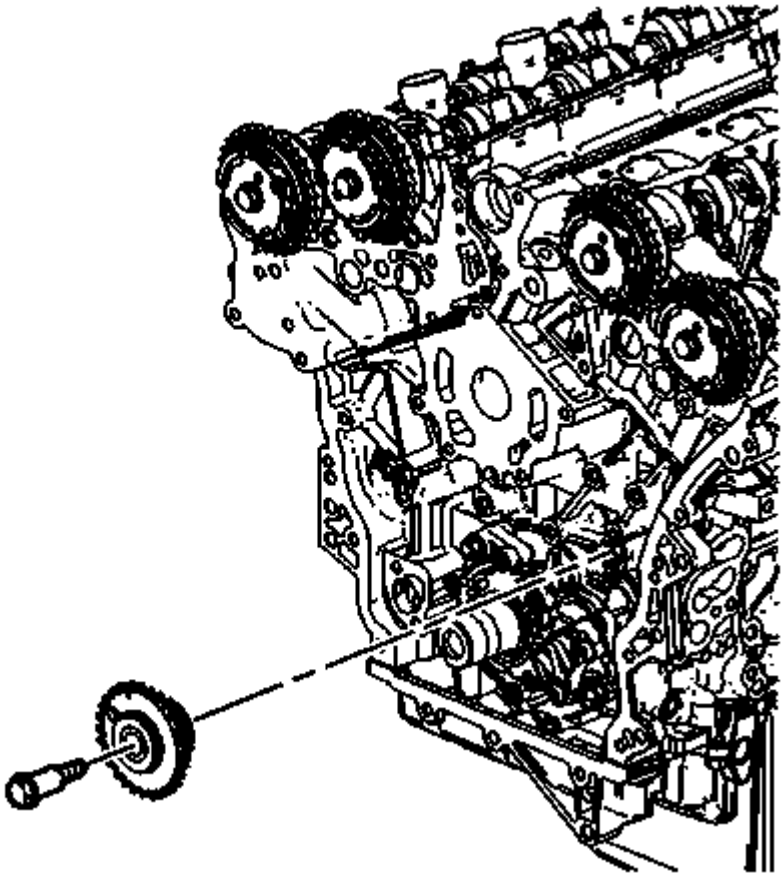

Fig. 138: View Of Upper Primary Camshaft Drive Chain Guide
Courtesy of GENERAL MOTORS COMPANY

1. Remove the engine front cover. Refer to **Engine Front Cover Replacement**.
2. Remove the primary camshaft drive chain tensioner. Refer to **Primary Camshaft Intermediate Drive Chain Tensioner Removal** .
3. Remove the primary upper camshaft drive chain guide. Refer to **Primary Timing Chain Guide Removal - Upper** .

Installation Procedure

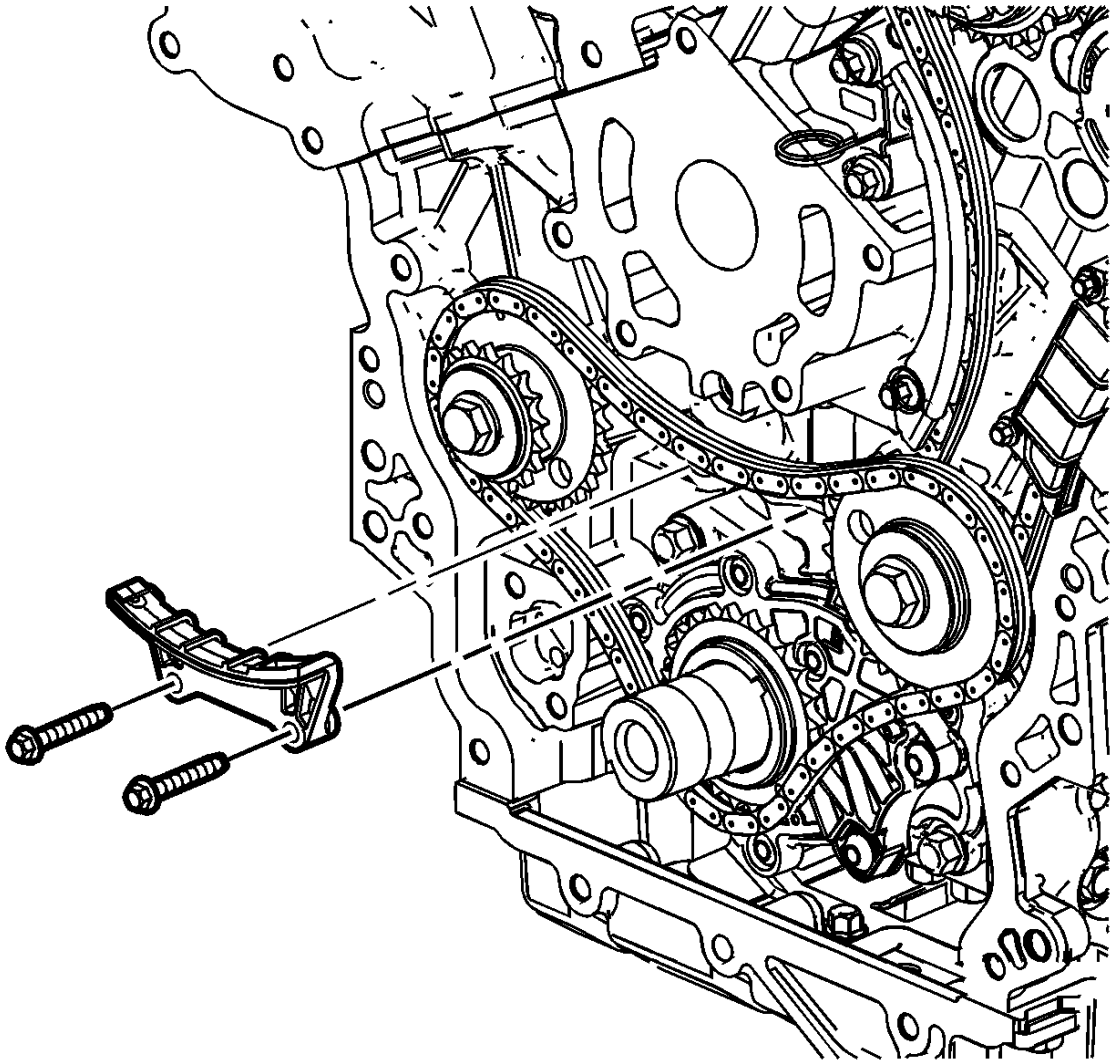

Fig. 139: View Of Upper Primary Camshaft Drive Chain Guide
Courtesy of GENERAL MOTORS COMPANY

1. Install the primary upper camshaft drive chain guide. Refer to **Primary Timing Chain Guide Installation - Upper** .
2. Install the primary camshaft drive chain tensioner. Refer to **Primary Camshaft Intermediate Drive Chain Tensioner Installation** .
3. Install the engine front cover. Refer to **Engine Front Cover Replacement**.

CAMSHAFT POSITION ACTUATOR REPLACEMENT - BANK 1

Special Tools

- **EN49982-1** Timing Chain Retainer
- **EN49982-2** Timing Chain Retainer

For equivalent regional tools, refer to **Special Tools** .

Removal Procedure

1. Remove the camshaft cover. Refer to **Camshaft Cover Replacement - Right Side**.
2. Remove the camshaft position actuator solenoid valve solenoid - intake. Refer to **Camshaft Position Actuator Solenoid Valve Solenoid Replacement - Bank 1 (Right Side) Intake** .
3. Remove the intake camshaft position sensor. Refer to **Camshaft Position Sensor Replacement - Bank 1 (Right Side) Intake** .
4. Remove the exhaust camshaft position sensor. Refer to **Camshaft Position Sensor Replacement - Bank 1 (Right Side) Exhaust** .
5. Remove the camshaft position actuator solenoid valve solenoid - exhaust. Refer to **Camshaft Position Actuator Solenoid Valve Solenoid Replacement - Bank 1 (Right Side) Exhaust** .
6. Rotate engine clockwise using crankshaft dampener retaining bolt until the flats at the rear ends of the camshafts are pointing up. This puts the camshafts on "base circle" and will reduce their tendency to rotate from valve spring pressure when the camshaft position actuators/drive chains are removed.

NOTE: **Do NOT remove or back out the camshaft position actuator bolt(s) significantly, simply break them loose from their fully-torqued position. The position actuators must stay firmly attached until the retaining tools are in place, but they should be broken loose while the chain is still tight and in position.**

7. Loosen intake and/or exhaust camshaft position actuator retaining bolts, depending on which camshaft position actuator and/or camshaft you will be servicing. If servicing both camshaft position actuators and/or camshafts, loosen both bolts.

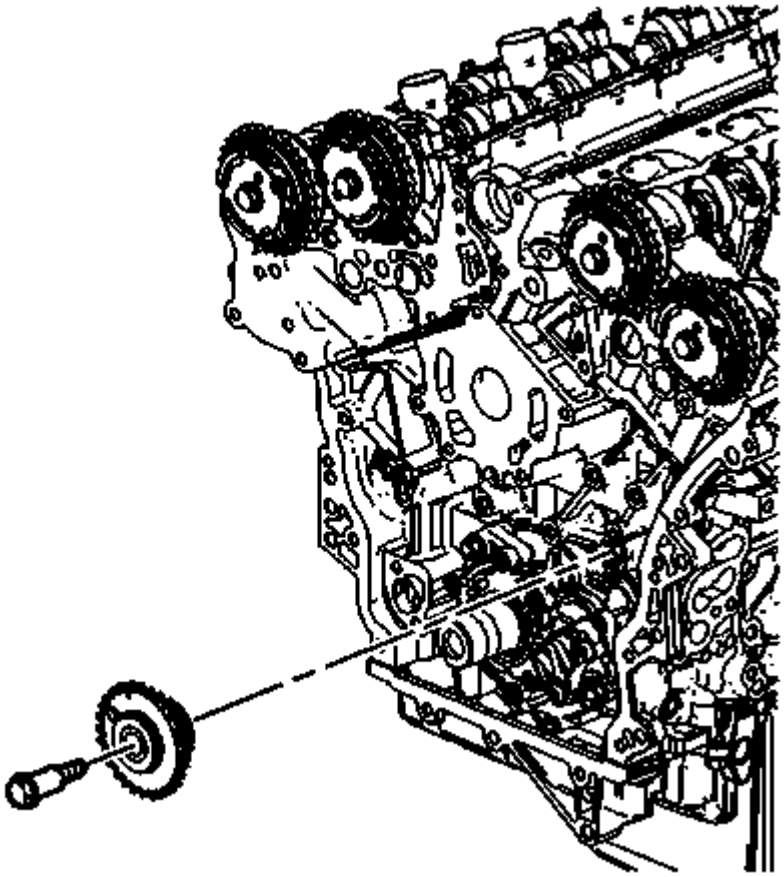

Fig. 140: Marking Position Of Chain To Camshaft Position Actuator - Intake
Courtesy of GENERAL MOTORS COMPANY

NOTE: **Be certain to clearly mark the position of the chain to the camshaft position actuator(s). Though the engine does not need to be set to a specific timing mark before starting the procedure, the relationship of the chain to the actuator(s) is critical and must be reestablished on assembly.**

8. Mark the position of the chain to the camshaft position actuator - intake.

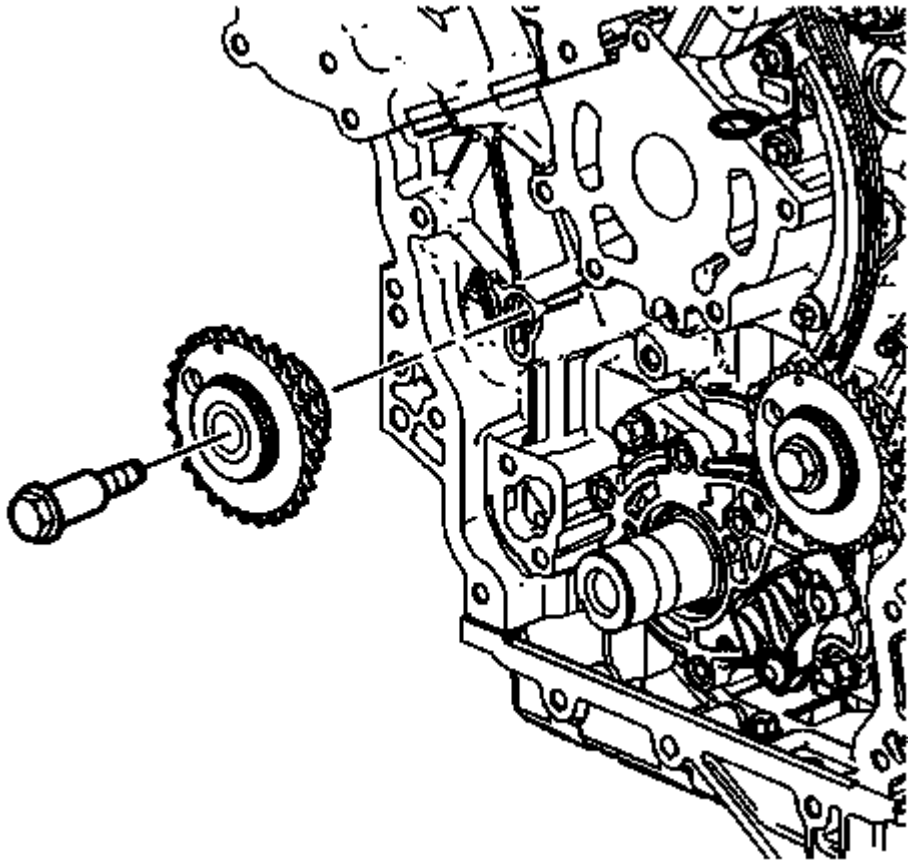

Fig. 141: Marking Position Of Chain To Camshaft Position Actuator - Exhaust
Courtesy of GENERAL MOTORS COMPANY

9. Mark the position of the chain to the camshaft position actuator - exhaust.

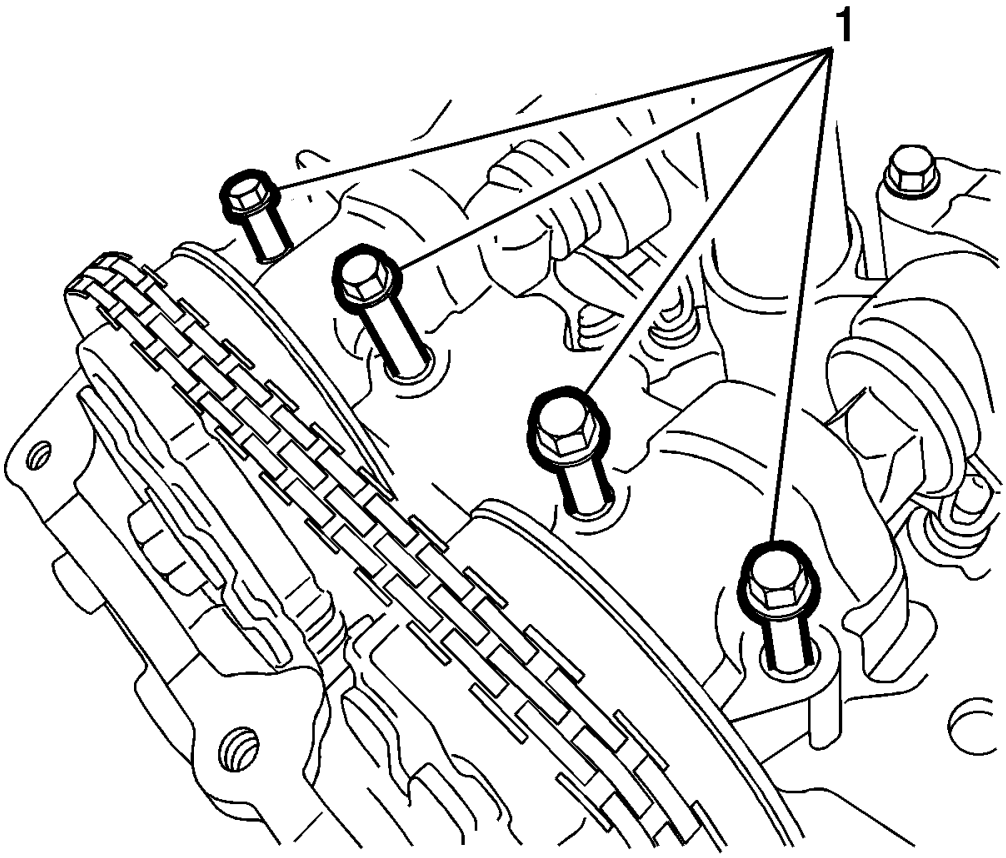

Fig. 142: Identifying Camshaft Front Cap & Bolts
Courtesy of GENERAL MOTORS COMPANY

10. Remove camshaft front cap bolts (1).

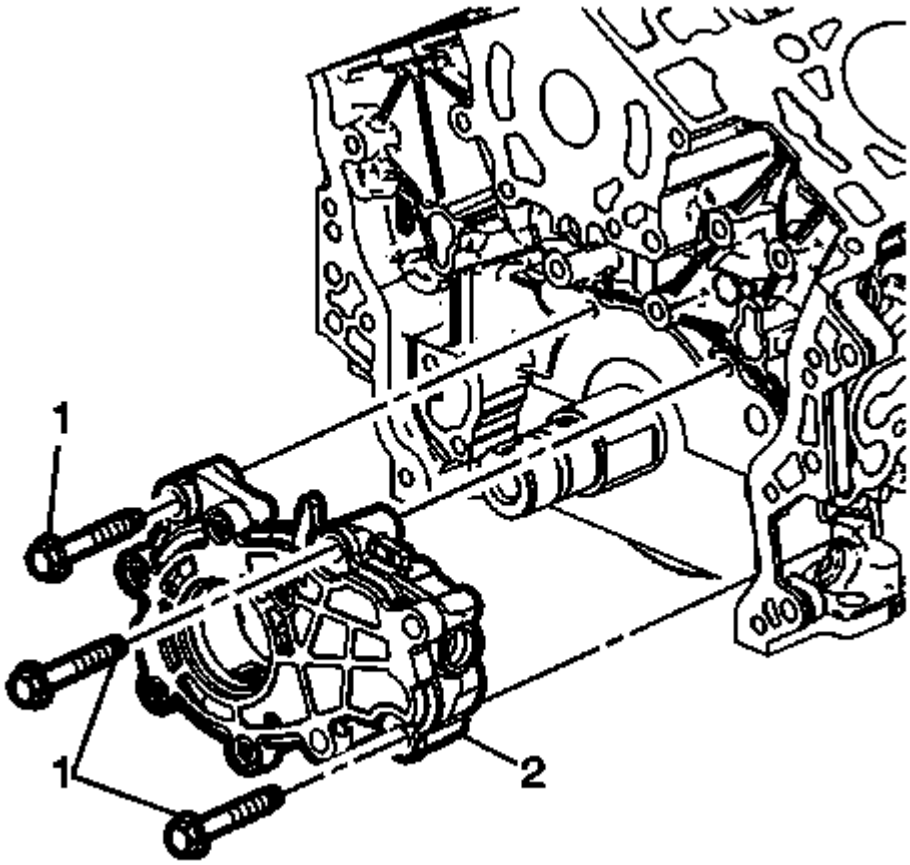

Fig. 143: View Of Camshaft Front Cap
Courtesy of GENERAL MOTORS COMPANY

NOTE: Do NOT remove or loosen any other camshaft bearing caps at this time, even if you intend to eventually remove the camshaft.

11. Remove the camshaft front cap (1).

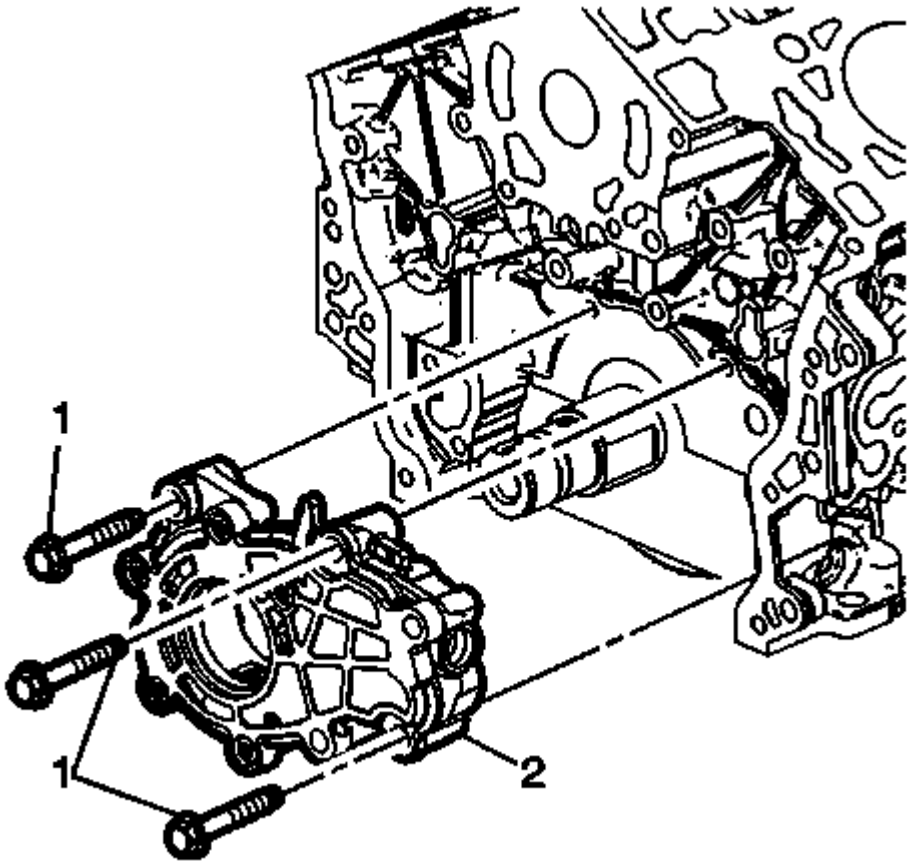

Fig. 144: Retainer Wingnut
Courtesy of GENERAL MOTORS COMPANY

12. Loosen wingnut (4) to open the clamping area of **EN49982-1** retainer.

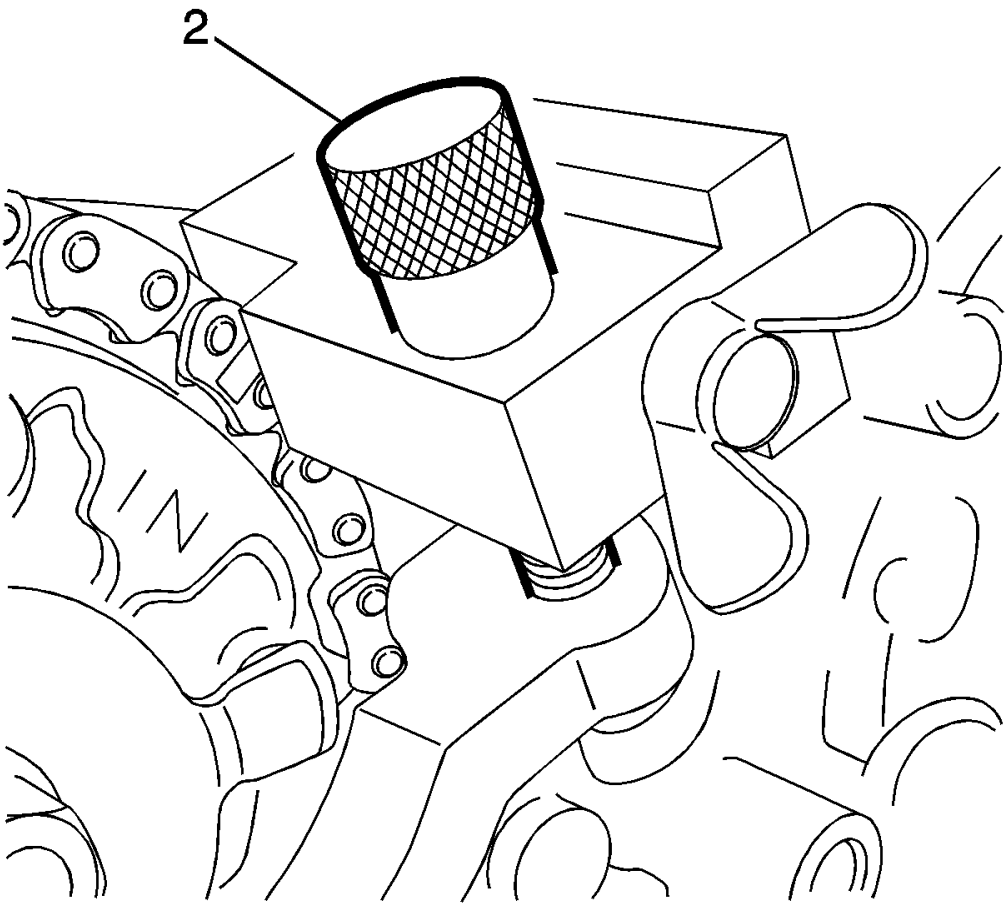

Fig. 145: View Of Retainer Thumbscrew
Courtesy of GENERAL MOTORS COMPANY

NOTE: **Do NOT overtighten the thumbscrew. The EN49982-1 retainer should be able to slide slightly via the slot the screw goes through. This fore/aft movement will allow easier removal and installation of the chain later.**

13. Install **EN49982-1** retainer intake side chain holder onto front cover by screwing in the thumbscrew (2) on the **EN49982-1** retainer finger-tight.

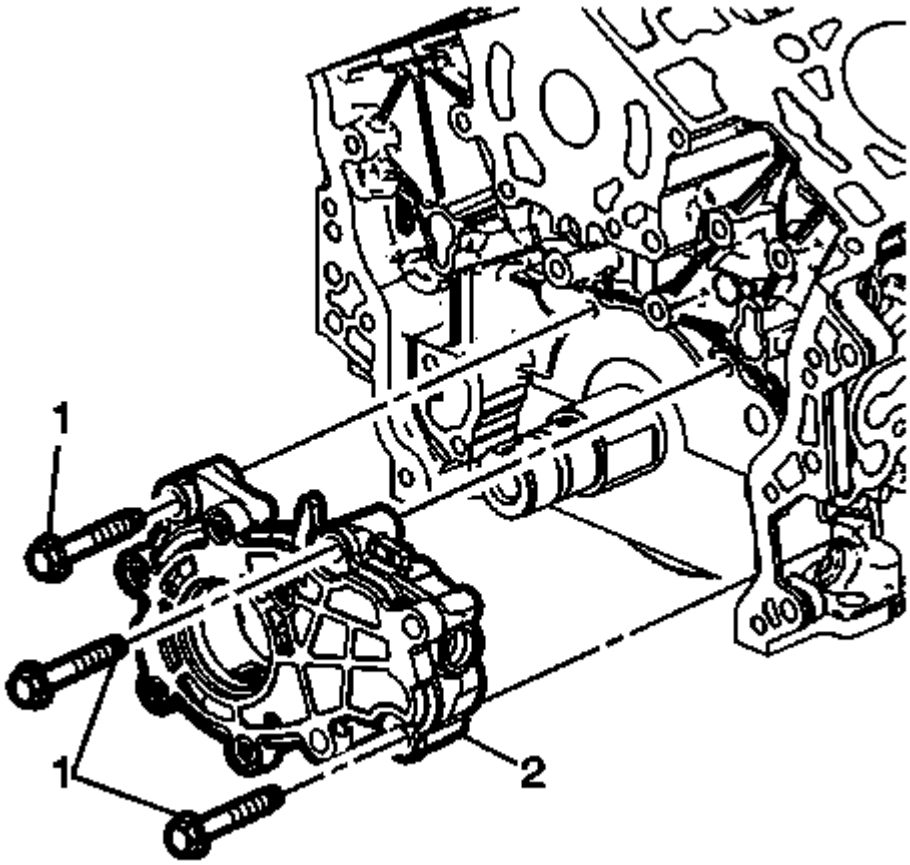

Fig. 146: Retainer Wingnut
Courtesy of GENERAL MOTORS COMPANY

NOTE: Do NOT tighten the wingnut with a tool of any kind. Firm finger-tightening is sufficient.

14. Tighten wingnut (4) so **EN49982-1** retainer closes over and firmly grasps timing chain.

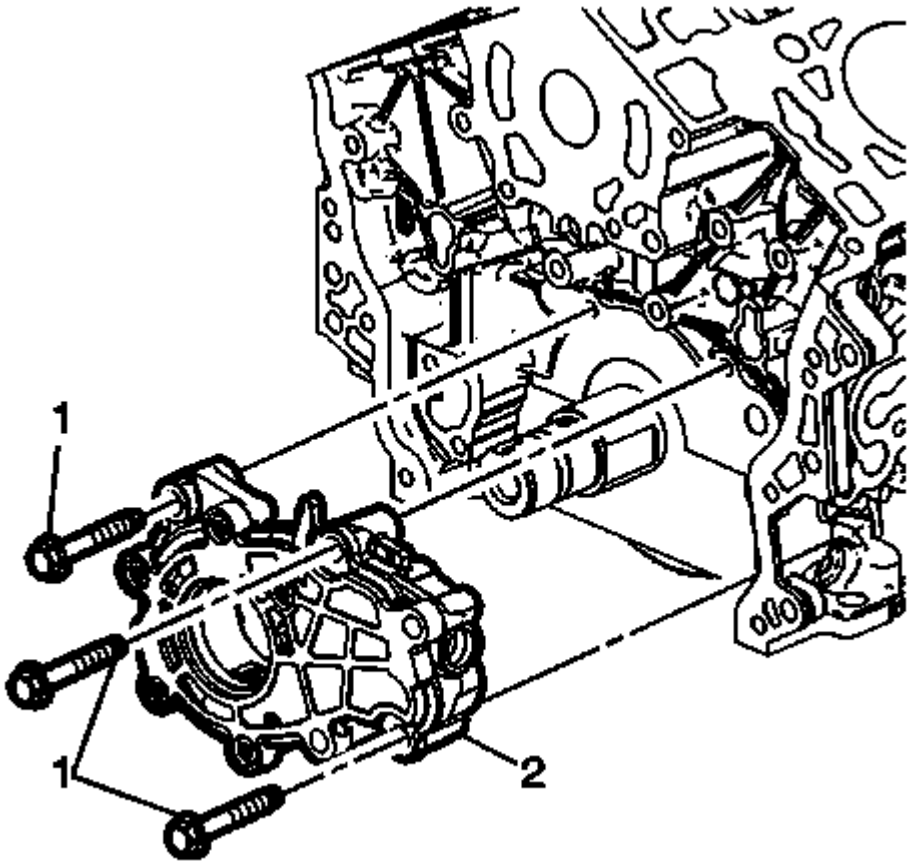

Fig. 147: Retainer Wedge
Courtesy of GENERAL MOTORS COMPANY

NOTE: The engine front cover is removed for clarity in the following graphics, but is NOT required to be removed to perform the procedure.

15. **EN49982-2** retainer (1) will be installed in the following steps such that it wedges between an internal rib (2) that is cast into the inside of the front cover (shown in dotted line above) and the timing chain and spring-loaded tensioner shoe (3), holding the chain in position. The wedge will be left in place during the cam position actuator and/or camshaft service.

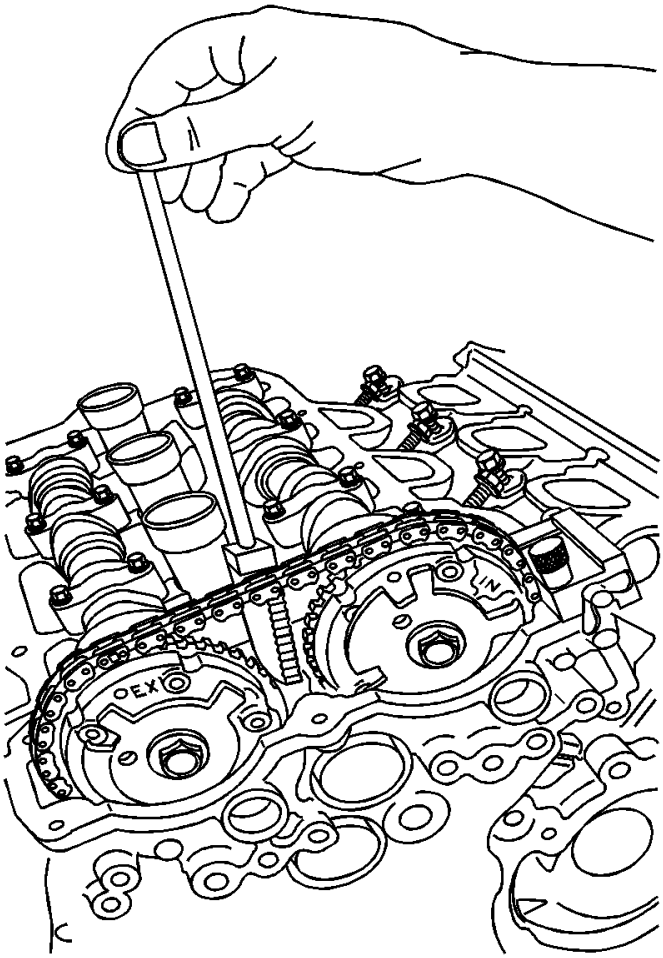

Fig. 148: Inserting Retainer
Courtesy of GENERAL MOTORS COMPANY

16. Insert the **EN49982-2** retainer between the two camshaft position actuators with the "teeth" on the **EN49982-2** retainer facing toward the front cover.

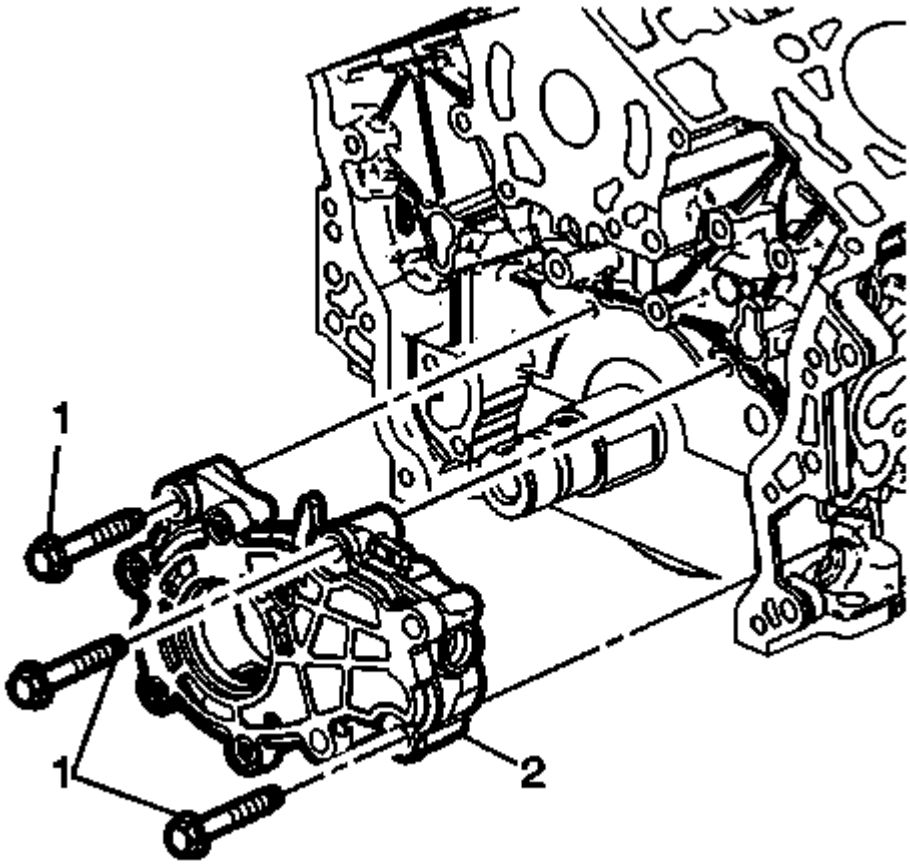

Fig. 149: Orienting Retainer Teeth
Courtesy of GENERAL MOTORS COMPANY

17. Once the wedge portion of **EN49982-2** retainer is below the camshaft position actuators, rotate the **EN49982-2** retainer until the flat in the handle faces toward the intake camshaft position actuator. This orients the "teeth" toward the chain.

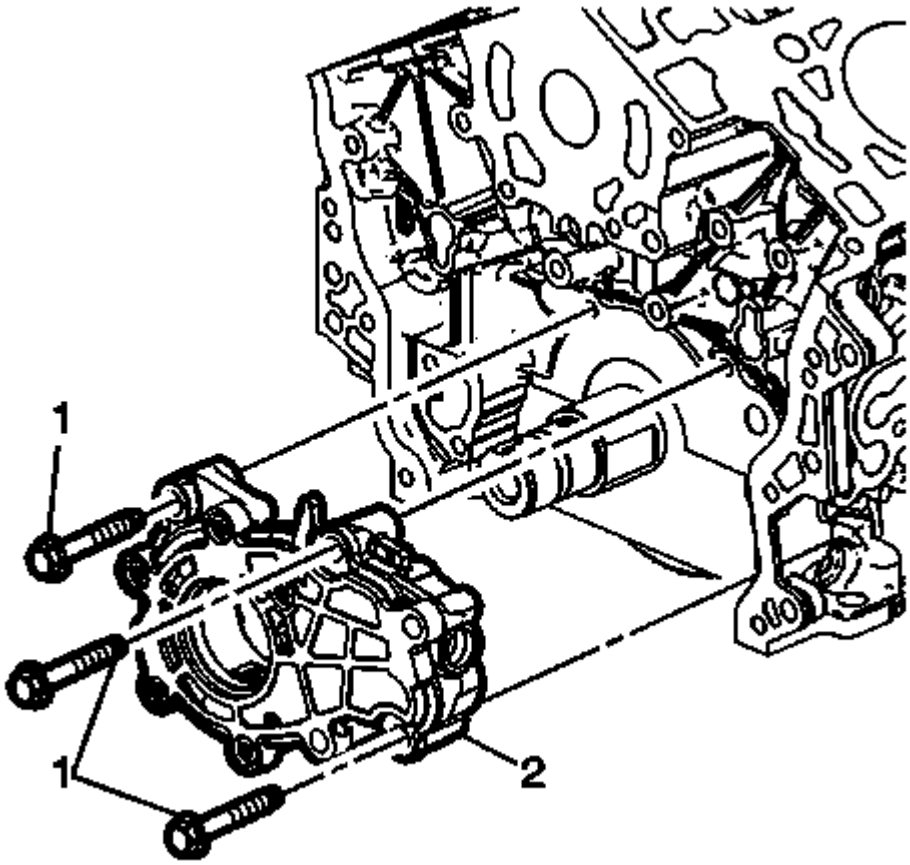

Fig. 150: Wedge, Timing Chain And Belt Casting
Courtesy of GENERAL MOTORS COMPANY

NOTE: **Do not try to force the wedge into position, simply ensure it is loosely engaged in the timing chain and in the correct overall position.**

18. Drop the wedge down until it begins to engage the timing chain and the belt casting (2).

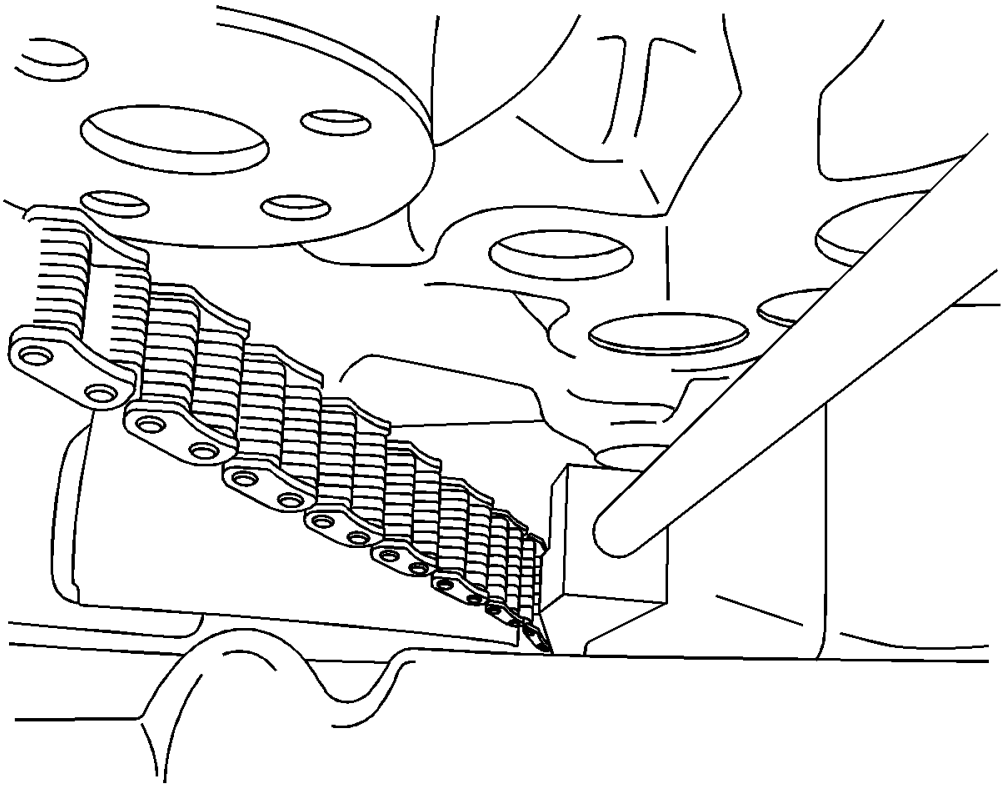

Fig. 151: Positioning Wedge
Courtesy of GENERAL MOTORS COMPANY

19. If possible shine a strong light down from above, between the camshaft position actuators, and see the wedge in overall position as shown in the above graphic.

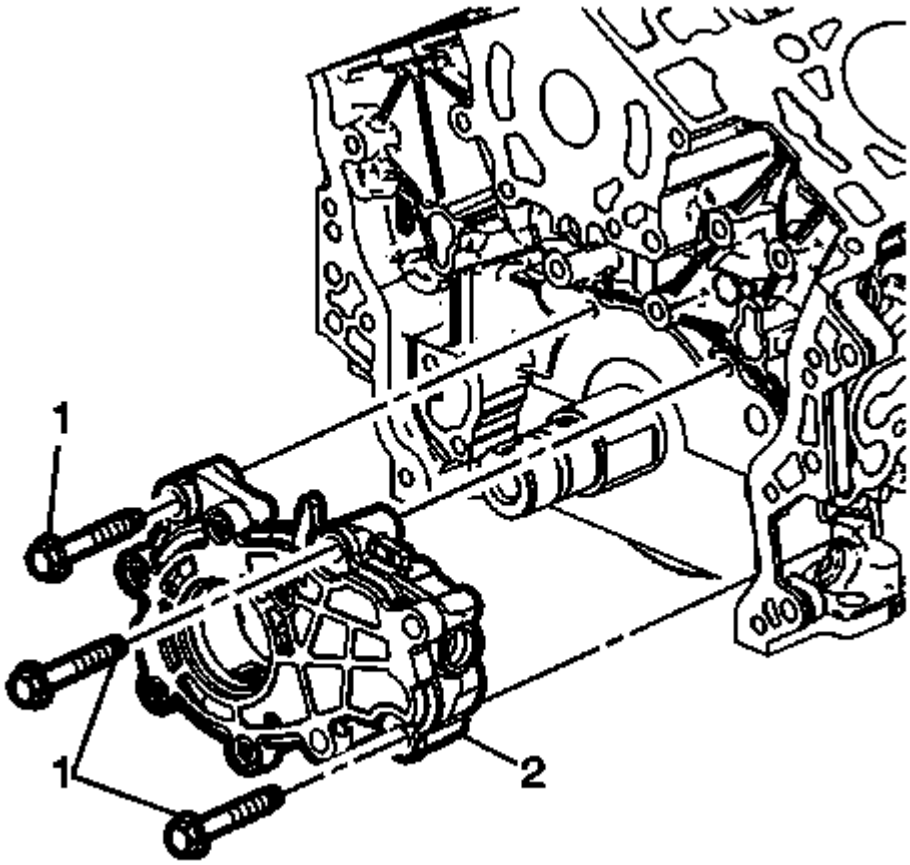

Fig. 152: Rotating Camshaft
Courtesy of GENERAL MOTORS COMPANY

20. Using a 20 mm wrench on the cast hexagonal portion of the exhaust camshaft, rotate the camshaft toward the intake camshaft while pushing down on the handle of the **EN49982-2** retainer.

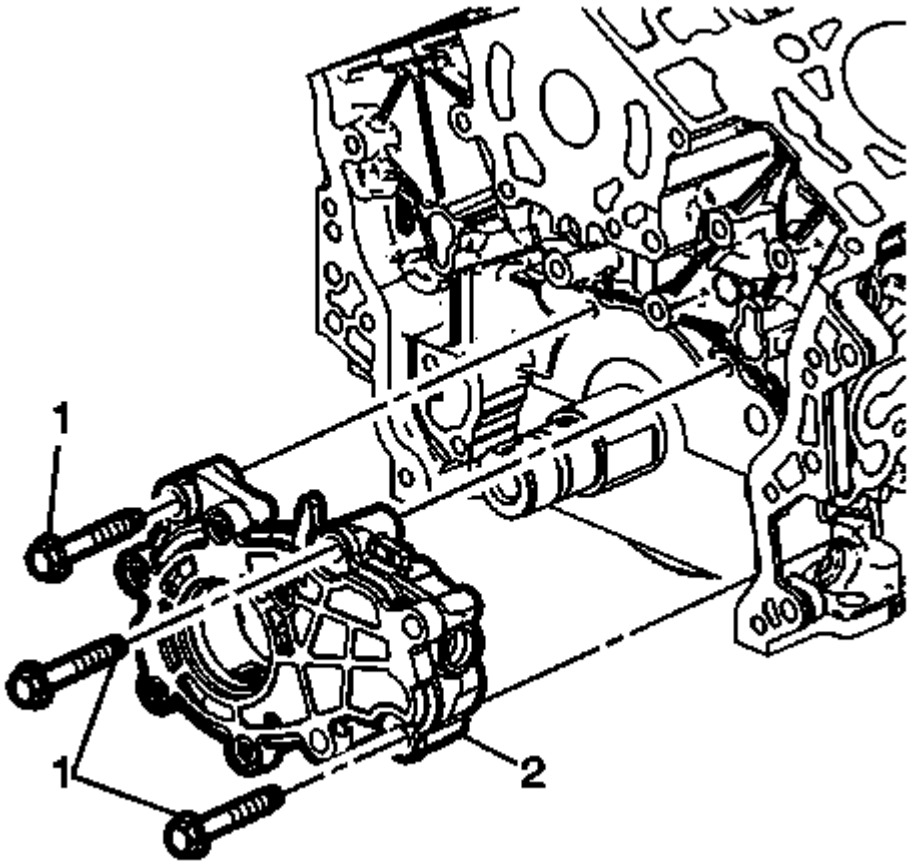

Fig. 153: Opening Gap Between Chain & Internal Rib In Front Cover
Courtesy of GENERAL MOTORS COMPANY

21. This rotation of the camshaft will compress the tensioner shoe (3) against the spring force of the tensioner, opening up a gap between the chain and the internal rib in the front cover. The wedge will then drop into this gap. You will feel a distinct click as the teeth engage the chain.

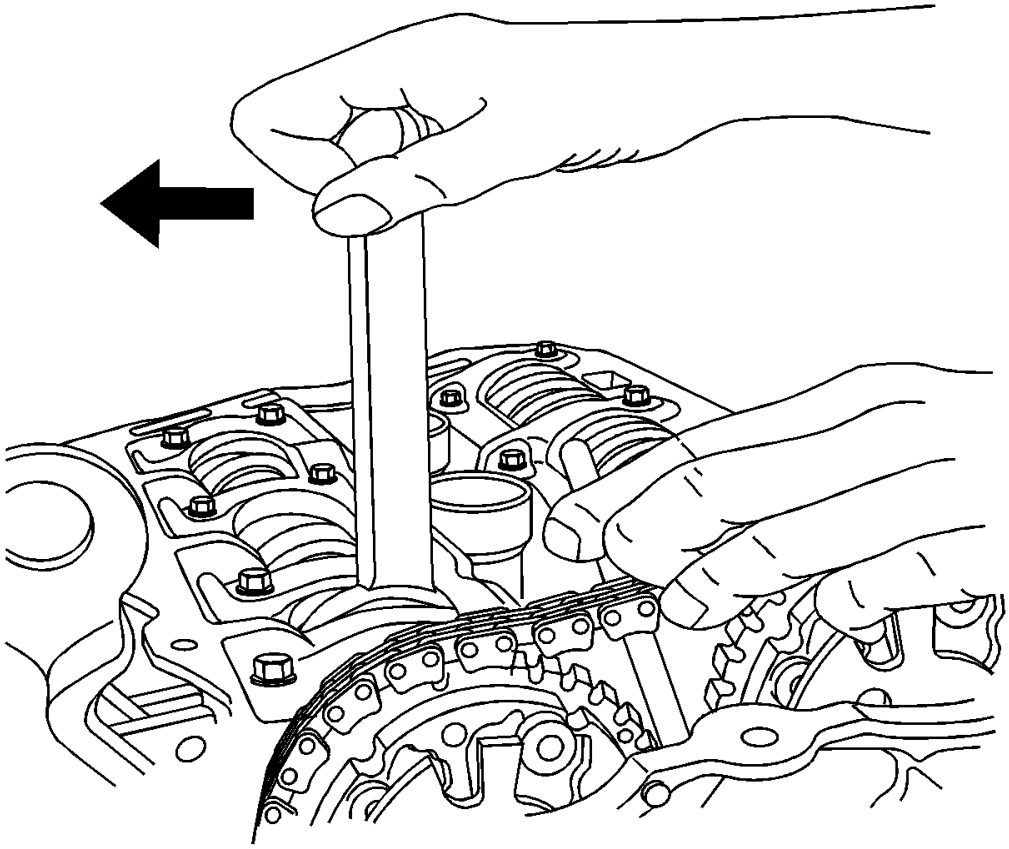

Fig. 154: Releasing Force On Wrench
Courtesy of GENERAL MOTORS COMPANY

CAUTION: Be sure the EN49982-2 is captured firmly as described before continuing. This is critical to ensuring the camshaft drive chains stay properly timed.

22. Release the force on the wrench, allowing the spring tension to close the tensioner shoe against the wedge portion of **EN49982-2** retainer. You should be able to lightly tug on the **EN49982-2** retainer and it should stay in position. Repeat Steps 20 and 21 if necessary to re-insert the **EN49982-2** retainer until you are certain it is in position and will stay in position.

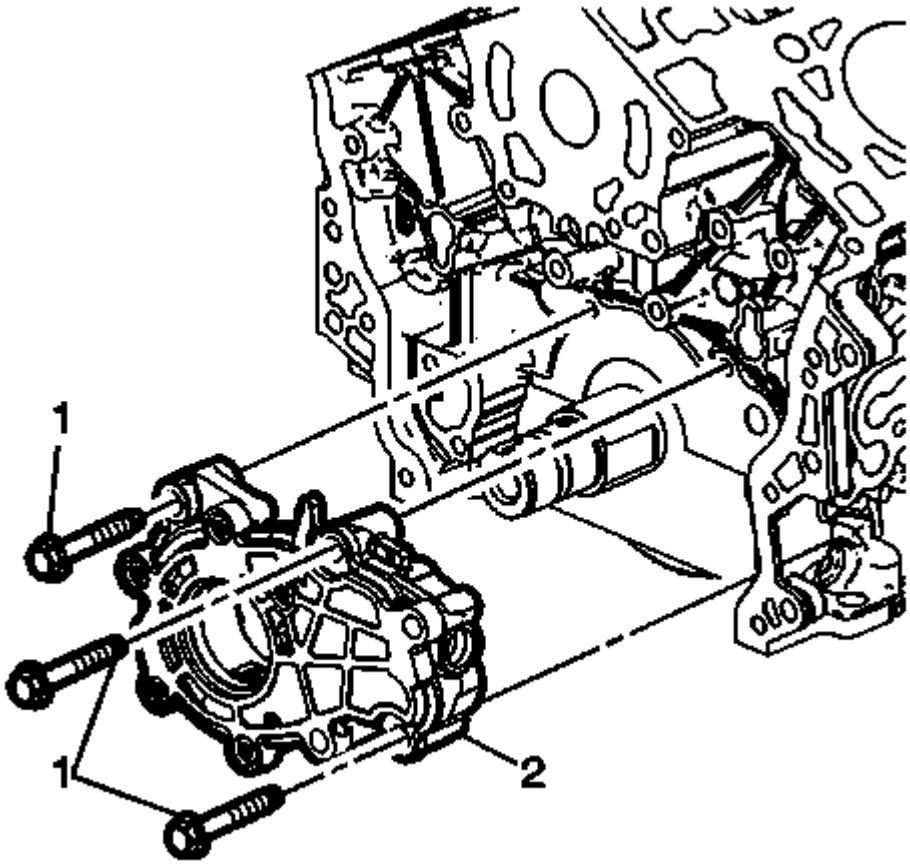

Fig. 155: Slack In Timing Drive Chain
Courtesy of GENERAL MOTORS COMPANY

23. With **EN49982-2** retainer in position and with the 20 mm wrench removed, there should now be some slack in the timing drive chain as indicated in the graphics shown.

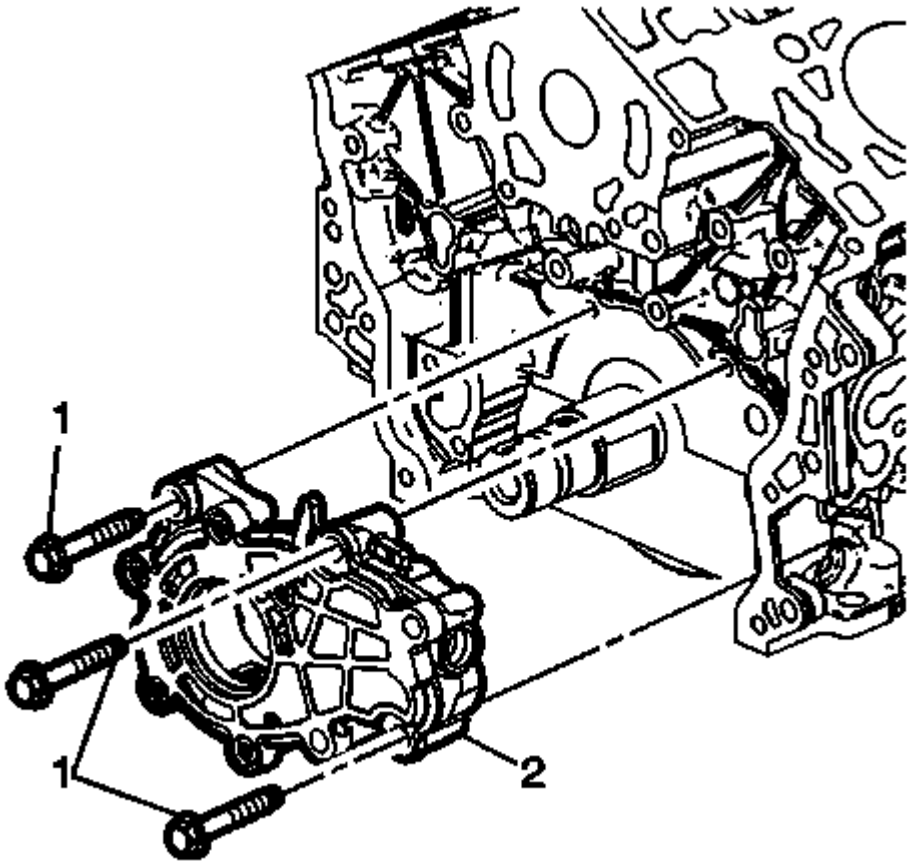

Fig. 156: Do Not Pry Warning
Courtesy of GENERAL MOTORS COMPANY

24. Do not pry against the face of the camshaft position actuators or the position actuator retaining bolt.

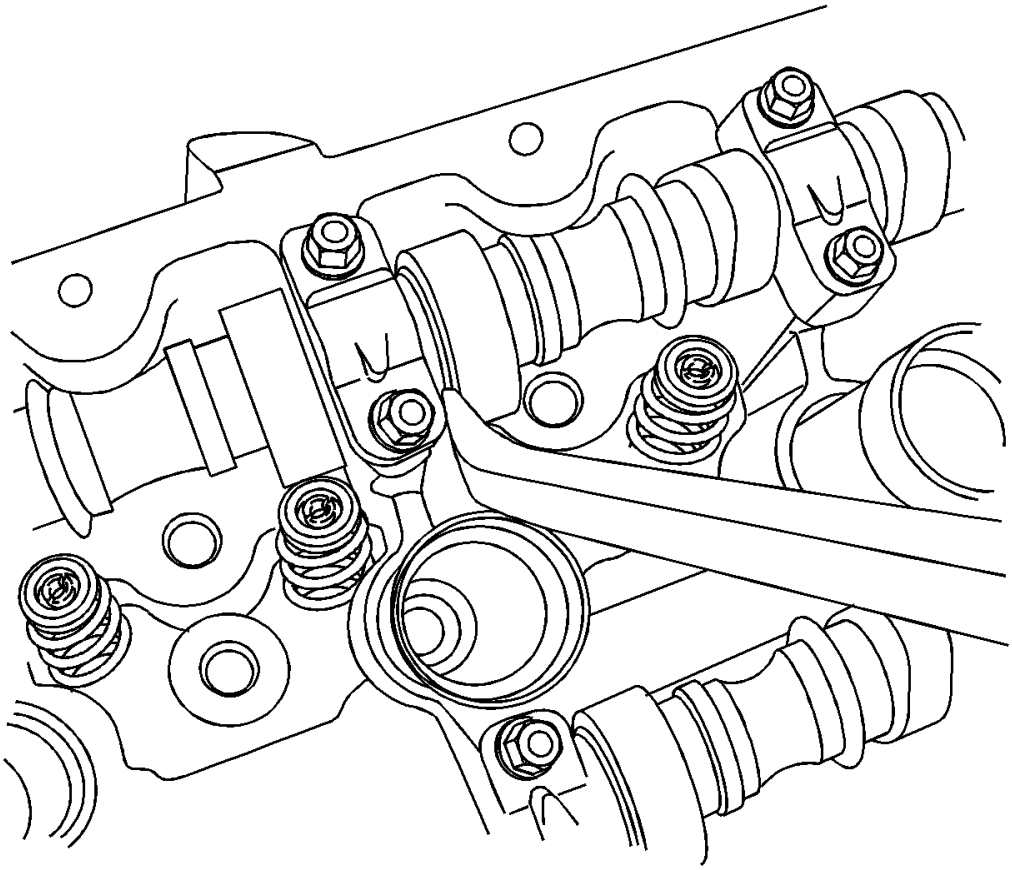

Fig. 157: Prying Camshaft Forward
Courtesy of GENERAL MOTORS COMPANY

CAUTION: Do not pry against the face of the camshaft position actuators or the position actuator retaining bolts as the position actuators will be damaged.

25. Position a screwdriver or small pry bar between a camshaft cap and camshaft lobe. Carefully move/pry the camshafts as far as possible toward the rear/flywheel end of the engine.

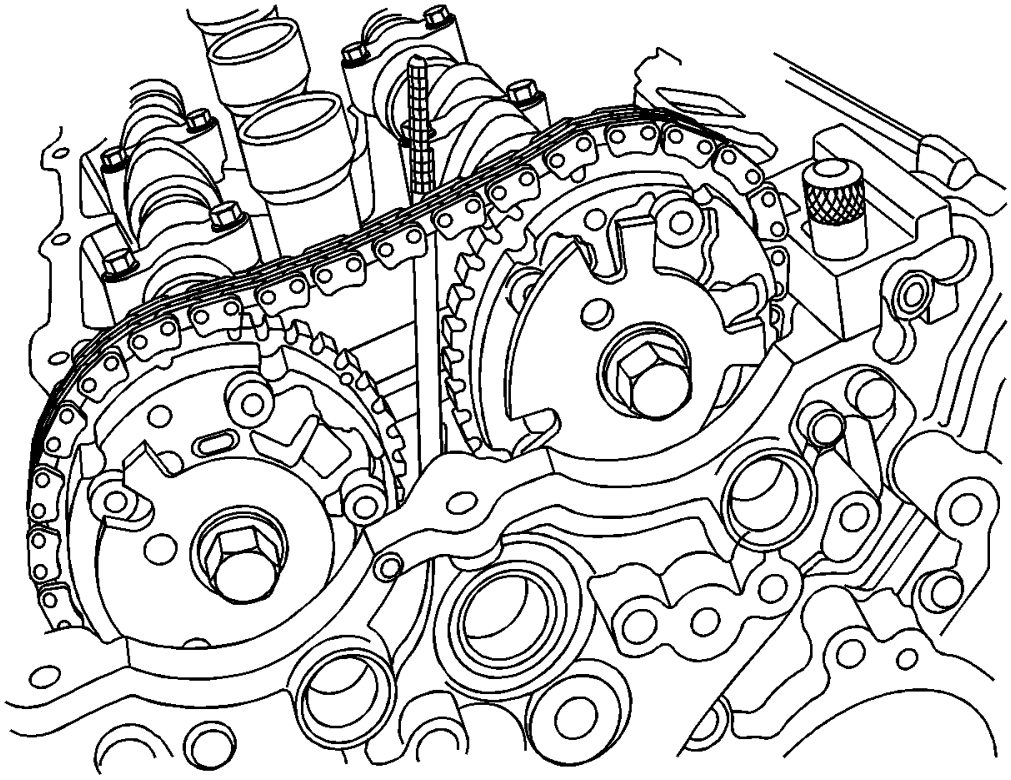

Fig. 158: Retainer Position
Courtesy of GENERAL MOTORS COMPANY

NOTE: **Do not move or disturb the EN49982 retainer components after their installation or the timing chains may be lost inside the front cover.**

26. The **EN49982-1** retainer and **EN49982-2** retainer should be in position as shown, they must be left in position during the servicing of the camshaft position actuator(s) and/or camshaft(s).

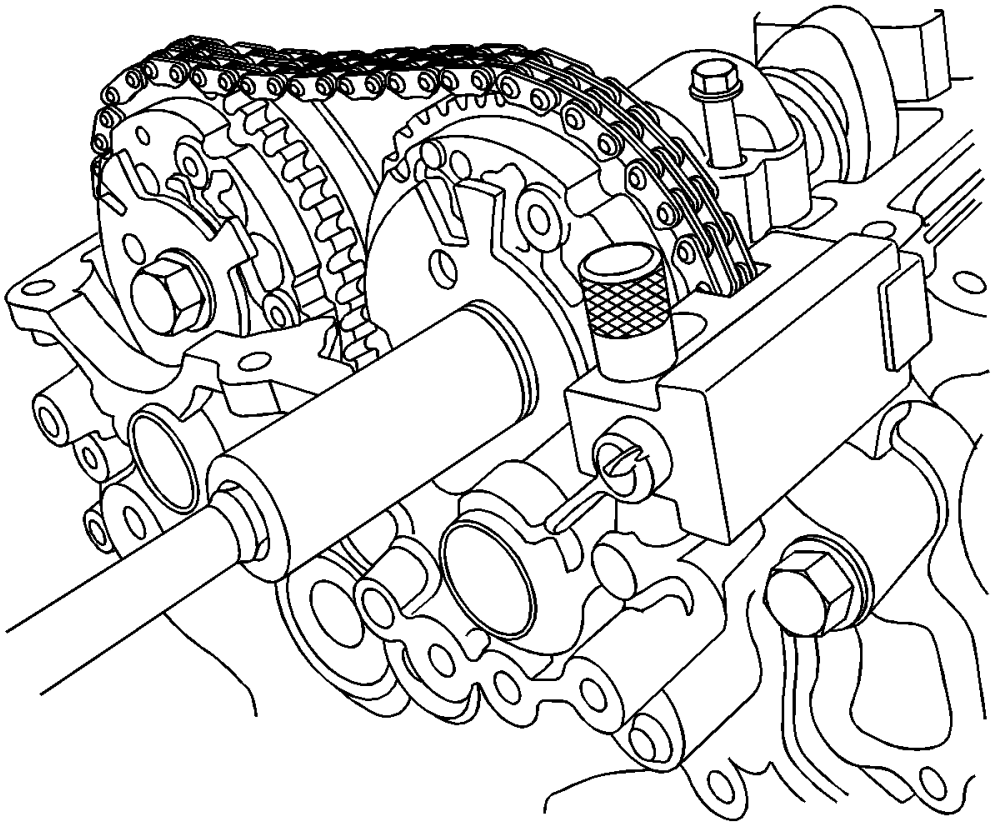

Fig. 159: View Of Intake Camshaft Position Actuator
Courtesy of GENERAL MOTORS COMPANY

27. To remove the intake camshaft position actuator, remove the loosened retaining bolt. To remove only the exhaust camshaft position actuator, skip the steps for removing the intake camshaft position actuator. However, the **EN49982-1** retainer MUST be installed as discussed even if the intake side will not be serviced or the timing of the camshaft chains will be lost.

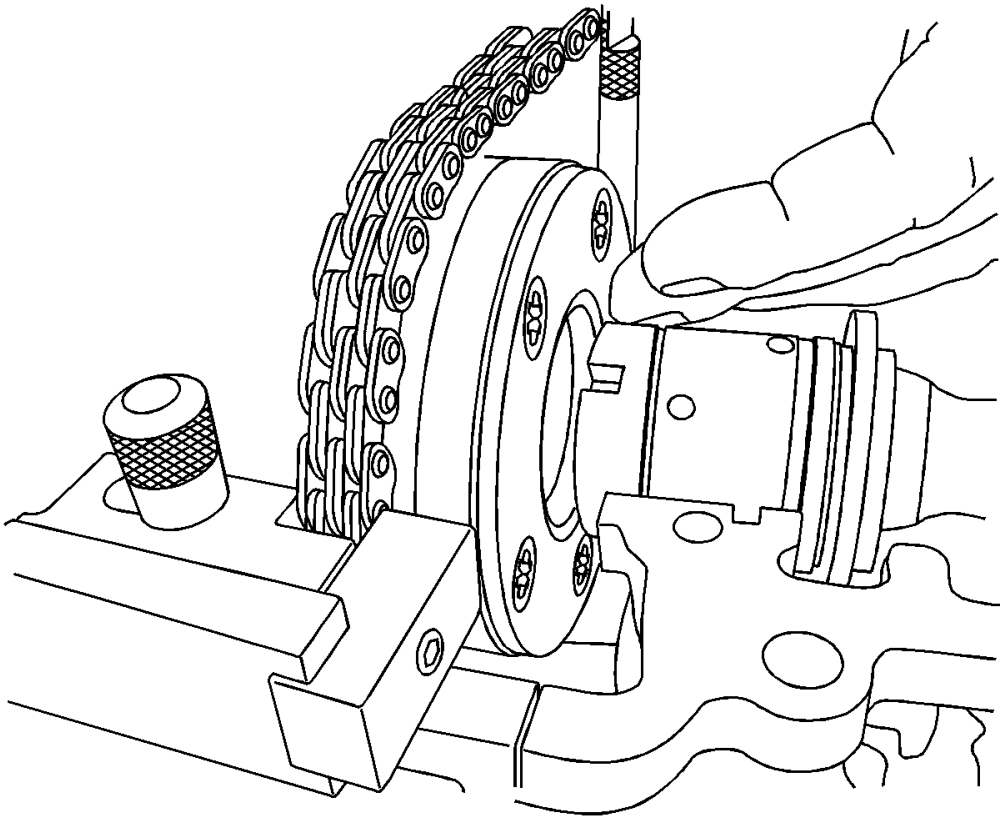

Fig. 160: Sliding Camshaft Position Actuator Off End Of Intake Camshaft
Courtesy of GENERAL MOTORS COMPANY

28. Slide the camshaft position actuator forward and off the end of the intake camshaft. The slot in the **EN49982-1** retainer will allow the tool to move forward enough to disengage the camshaft position actuator from the front of the camshaft. Remove the plastic thrust washer when removing the camshaft position actuator from the end of the camshaft.

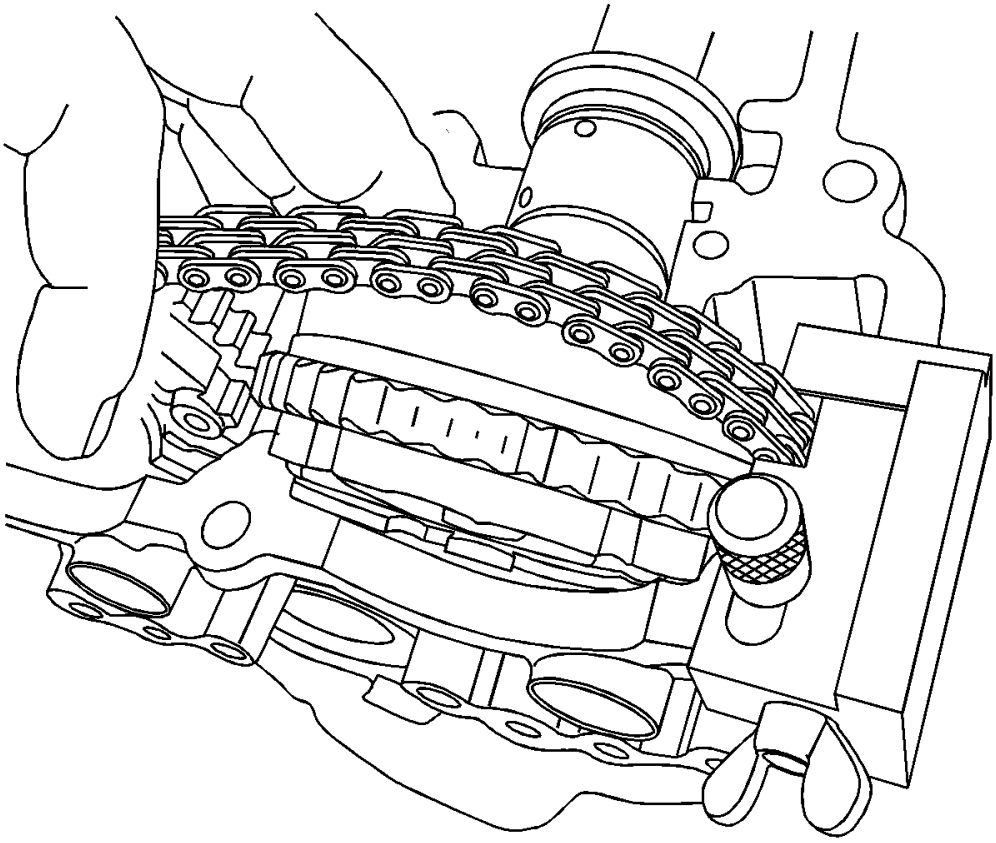

Fig. 161: Tilting Camshaft Position Actuator Forward
Courtesy of GENERAL MOTORS COMPANY

29. Tilt the camshaft position actuator forward and out/away from the engine.

NOTE: **DO NOT remove the EN49982 retainers. They are holding the cam chains to maintain their properly-timed positions.**

30. Allow the chain to rest on the **EN49982-1** retainer and **EN49982-2** retainer in position during service.

Installation Procedure

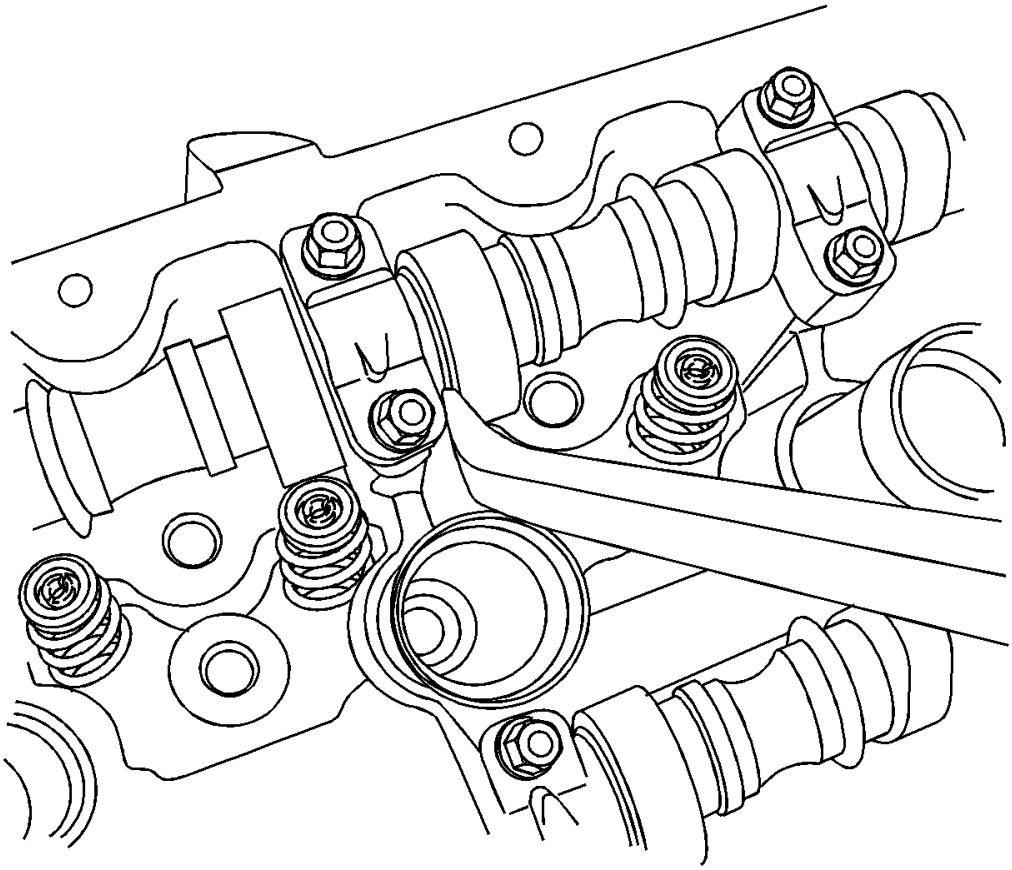

Fig. 162: Prying Camshaft Forward
Courtesy of GENERAL MOTORS COMPANY

1. It may help to carefully pry the camshaft forward and to move the **EN49982-1** retainer backward via the slot to reengage the position actuator to the camshaft. The dowel pin on the camshaft position actuator must be aligned with the slot in the camshaft nose for reassembly.

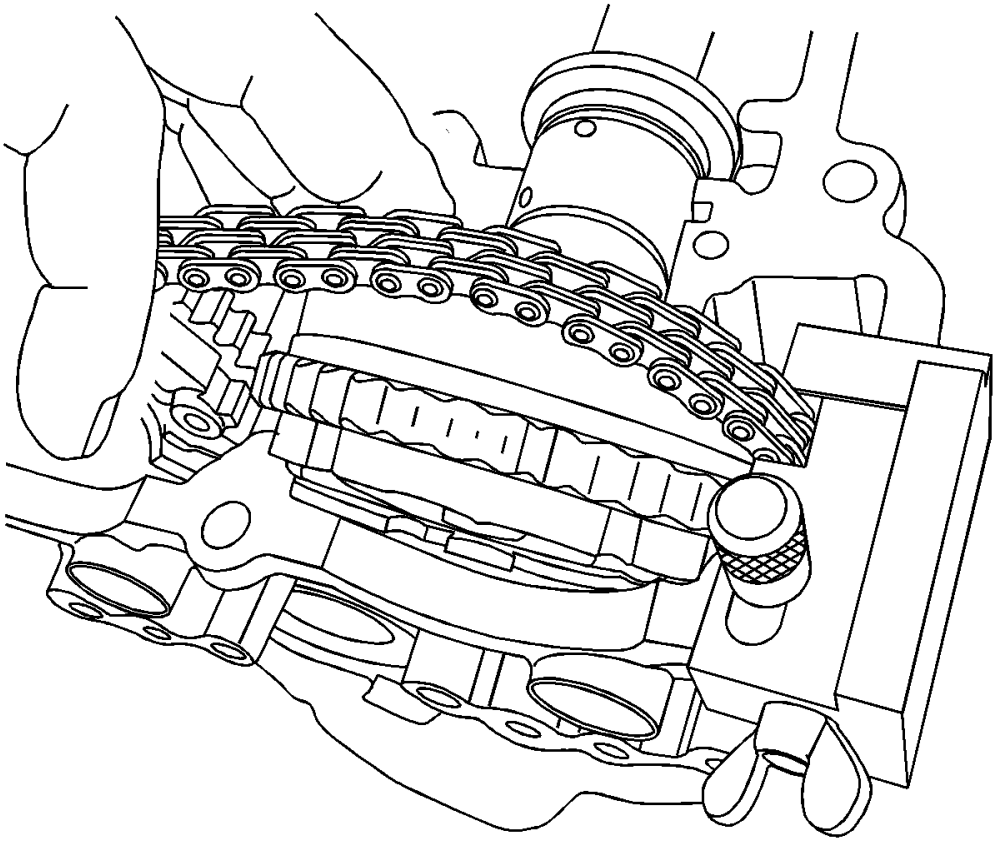

Fig. 163: Tilting Camshaft Position Actuator Forward
Courtesy of GENERAL MOTORS COMPANY

2. Install the intake camshaft position actuator first by inserting the actuator between the timing chain and front cover. Tilt the actuator in and engage the chain while aligning the marks you made on the chain and position actuator.

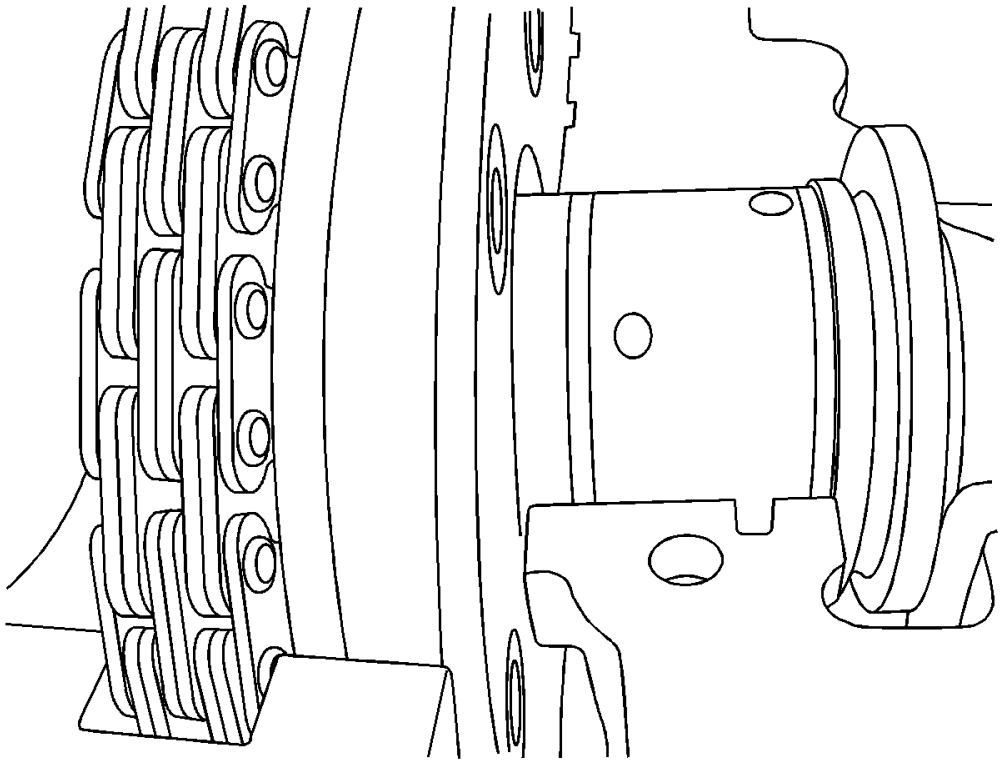

Fig. 164: Fitting Camshaft Position Actuator
Courtesy of GENERAL MOTORS COMPANY

3. Ensure the camshaft position actuator fits snugly to the end of the camshaft.

CAUTION: Refer to Fastener Caution .

4. Install the intake camshaft position actuator retaining bolt, and lightly tighten the bolt to hold the camshaft actuator in place. DO NOT torque at this time.
5. Install the exhaust camshaft position actuator retaining bolt, and lightly tighten the bolt to hold the camshaft actuator in place. DO NOT torque at this time.
6. Double-check that the marks on both the intake and exhaust camshaft position actuators to ensure that they are aligned with their respective paint marks on the chain.

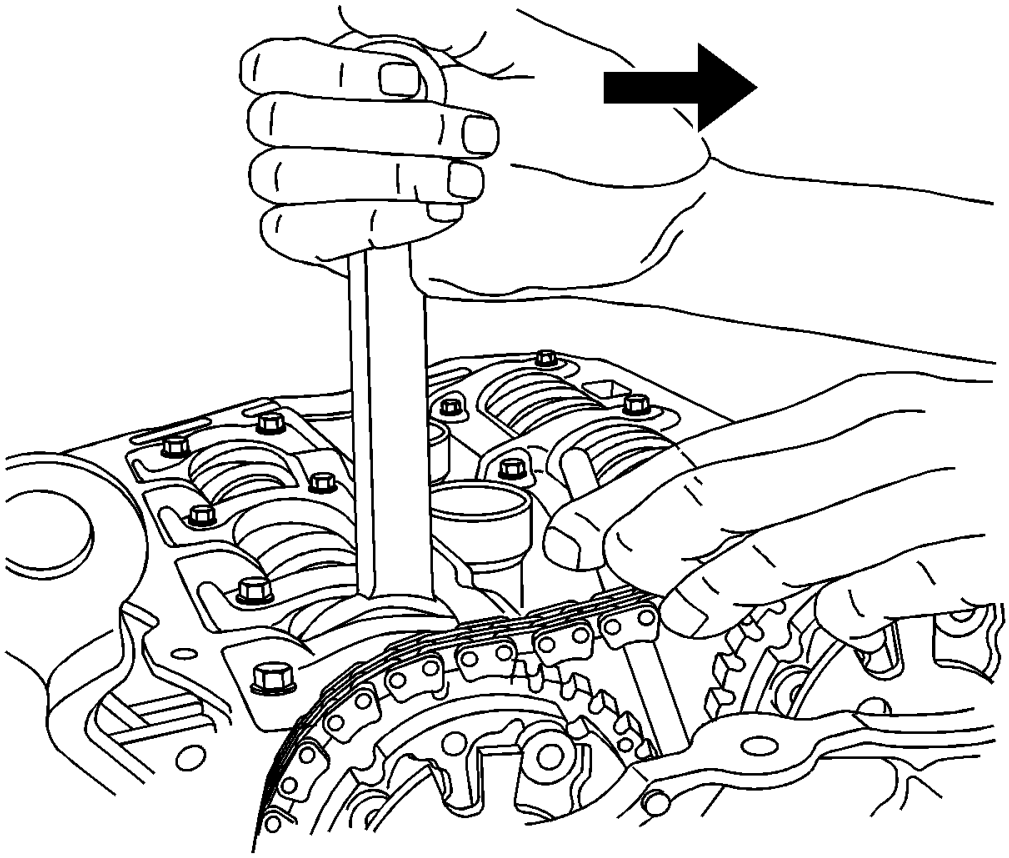

Fig. 165: Rotating Camshaft
Courtesy of GENERAL MOTORS COMPANY

7. Using a 20 mm wrench on the cast hexagonal portion of the exhaust camshaft, rotate the camshaft clockwise while pulling up on the handle of the **EN49982-2** retainer.
8. Remove EN49982-2 retainer.
9. Release the pressure on the wrench. The timing chain should now be tight and should lose the slack the wedge was providing.

NOTE: Double-check the marks on the camshaft position actuators and chains to ensure they are correct.

10. Torque one or both camshaft position actuator retaining bolts to 58 N.m (43 lb ft).

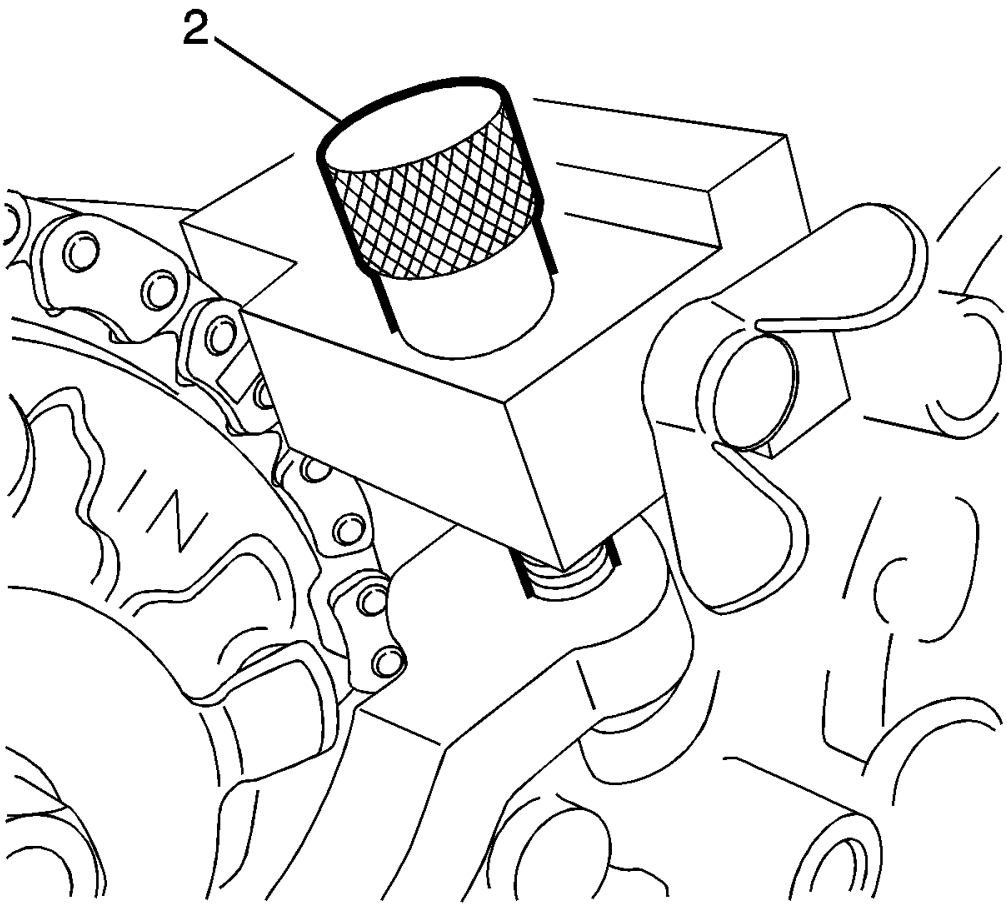

Fig. 166: View Of Retainer Thumbscrew
Courtesy of GENERAL MOTORS COMPANY

11. Unscrew the wingnut on **EN49982-1** retainer to release timing chain, and then remove **EN49982-1** retainer from the front cover by unscrewing the thumbscrew (2).

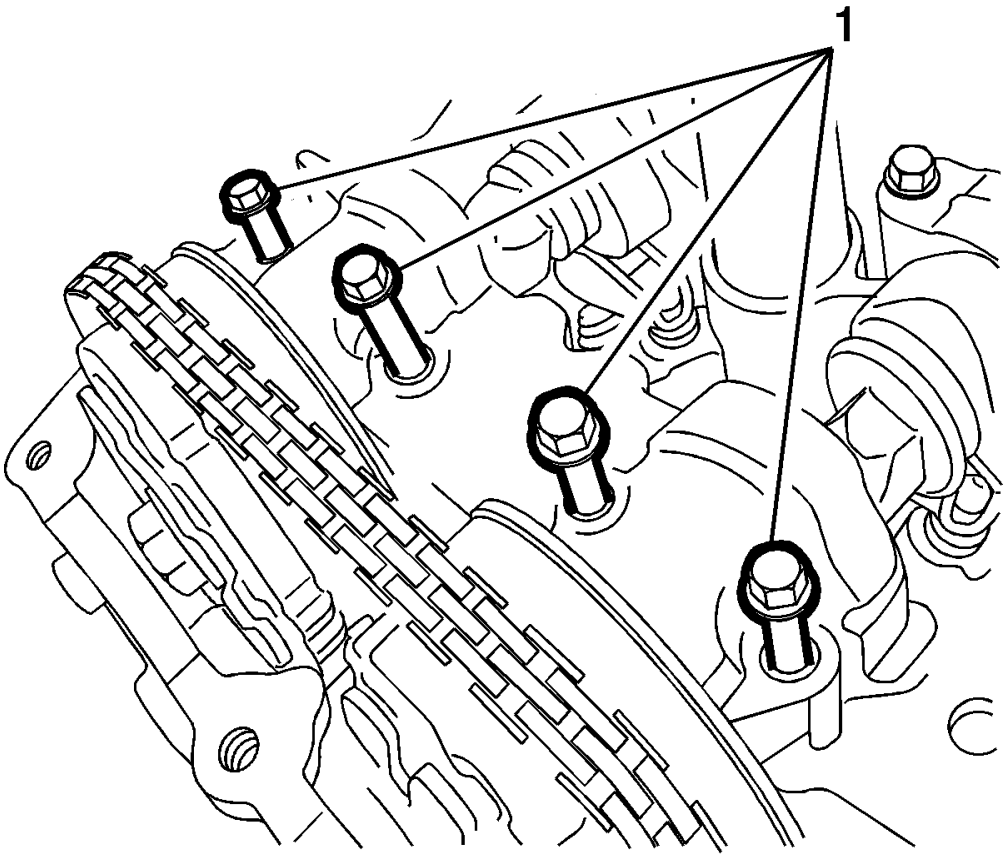

Fig. 167: Identifying Camshaft Front Cap & Bolts
Courtesy of GENERAL MOTORS COMPANY

12. Install camshaft front cap and bolts (1).
13. Tighten the camshaft front cap outer bolts to 10 N.m (89 lb in).
14. Tighten the camshaft front cap inner bolts to 10 N.m (89 lb in).
15. Install the camshaft position actuator solenoid valve solenoid - exhaust. Refer to **Camshaft Position Actuator Solenoid Valve Solenoid Replacement - Bank 1 (Right Side) Exhaust** .
16. Install the camshaft position actuator solenoid valve solenoid-intake. Refer to **Camshaft Position Actuator Solenoid Valve Solenoid Replacement - Bank 1 (Right Side) Intake** .
17. Install the intake camshaft position sensors. Refer to **Camshaft Position Sensor Replacement - Bank 1 (Right Side) Intake** .
18. Install the exhaust camshaft position sensor. Refer to **Camshaft Position Sensor Replacement - Bank 1 (Right Side) Exhaust** .
19. Install the camshaft cover. Refer to **Camshaft Cover Replacement - Right Side**.

CAMSHAFT POSITION ACTUATOR REPLACEMENT - BANK 2

Special Tools

EN-48313 Timing Chain Retention Tool

For equivalent regional tools, refer to **Special Tools** .

Removal Procedure

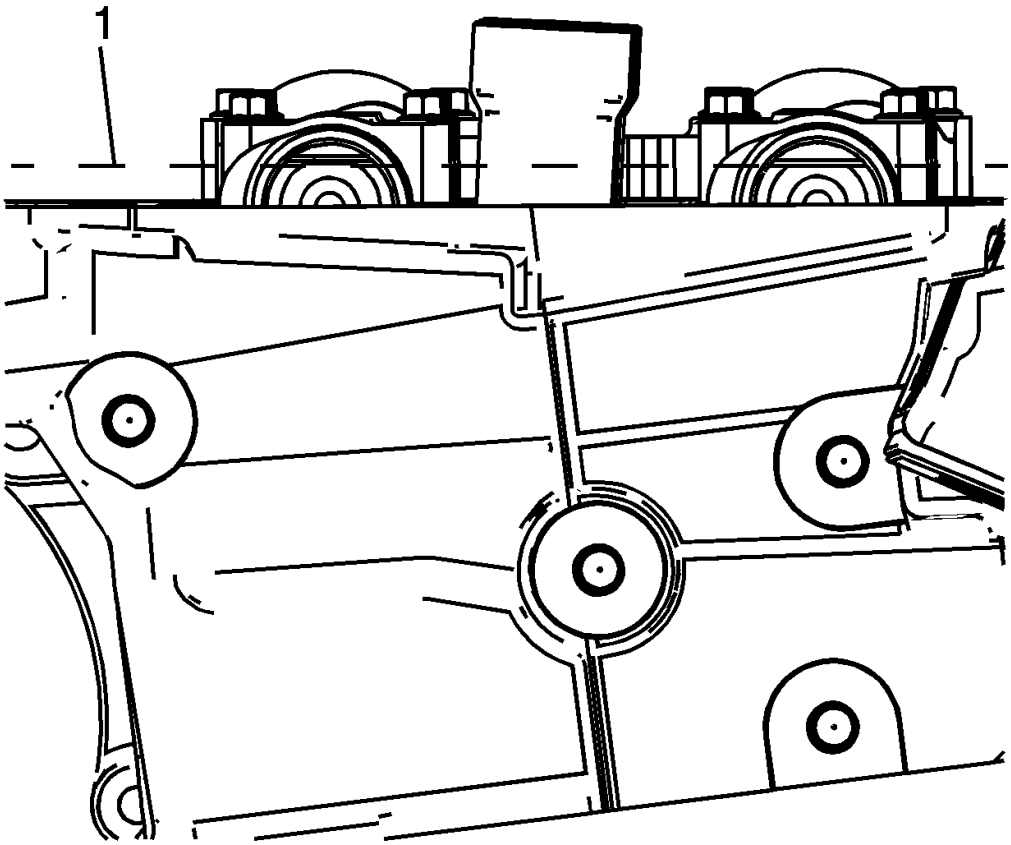

Fig. 168: View Of Camshaft Flats Parallel With Camshaft Cover Rail
Courtesy of GENERAL MOTORS COMPANY

1. Remove the left camshaft cover. Refer to **Camshaft Cover Replacement - Left Side**.
2. Remove the left intake and exhaust camshaft position sensors. Refer to **Camshaft Position Sensor Replacement - Bank 2 (Left Side) Intake** , and **Camshaft Position Sensor Replacement - Bank 2 (Left Side) Exhaust** .
3. Remove the left intake and exhaust camshaft position actuator solenoids. Refer to **Camshaft Position Actuator Solenoid Valve Solenoid Replacement - Bank 2 (Left Side) Intake** , and **Camshaft Position Actuator Solenoid Valve Solenoid Replacement - Bank 2 (Left Side) Exhaust** .

NOTE: Rotate the crankshaft balancer bolt in a clockwise direction ONLY.

4. Rotate the crankshaft balancer using the balancer bolt until the camshafts are in a neutral (low tension) position. The camshafts will be parallel with the camshaft cover rail (1).

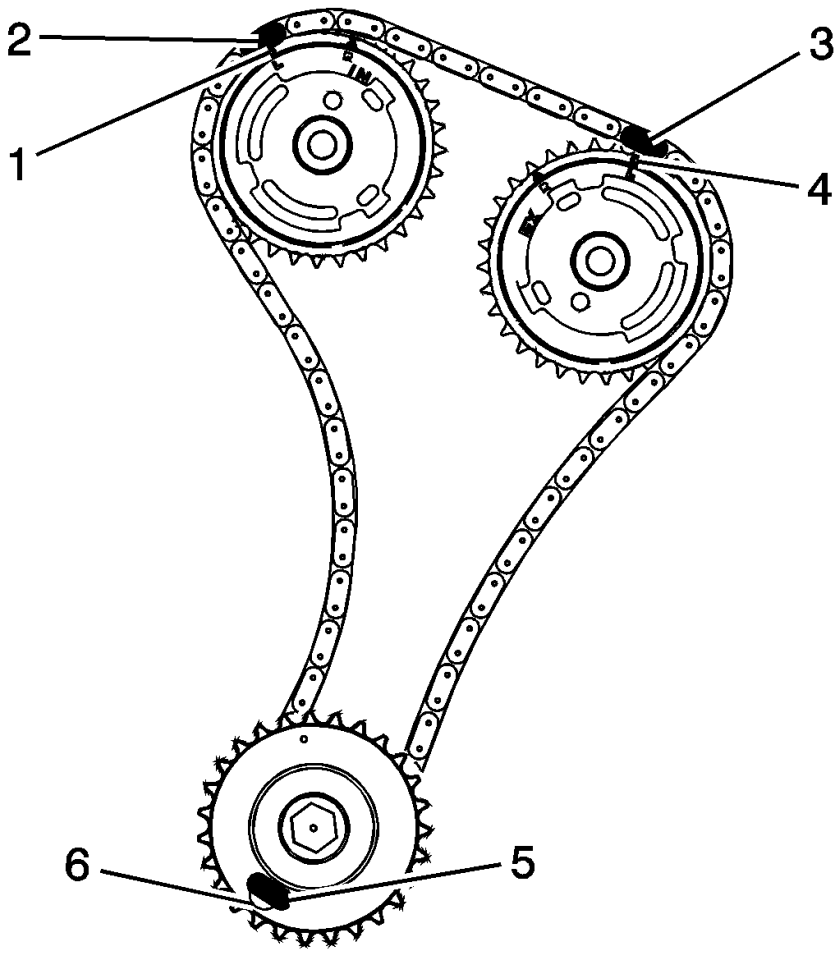

Fig. 169: Locating Left Secondary Camshaft Drive Chain Timing Marks
Courtesy of GENERAL MOTORS COMPANY

NOTE: Ensure that the camshaft timing chain and the camshaft position actuators are marked for proper assembly.

5. Use a paint stick to create an alignment mark on one of the timing chain links (2) and the adjacent tooth on the exhaust camshaft position actuator (1).
6. Use a paint stick to create an alignment mark on one of the timing chain links (3) and the adjacent tooth on the intake camshaft position actuator (4).

CAUTION: Refer to Torque Reaction Against Timing Drive Chain Caution .

7. Use an open end wrench on the hex cast into the left intake and exhaust camshafts and rotate the camshafts toward each other in order to create slack in the chain between the actuators.

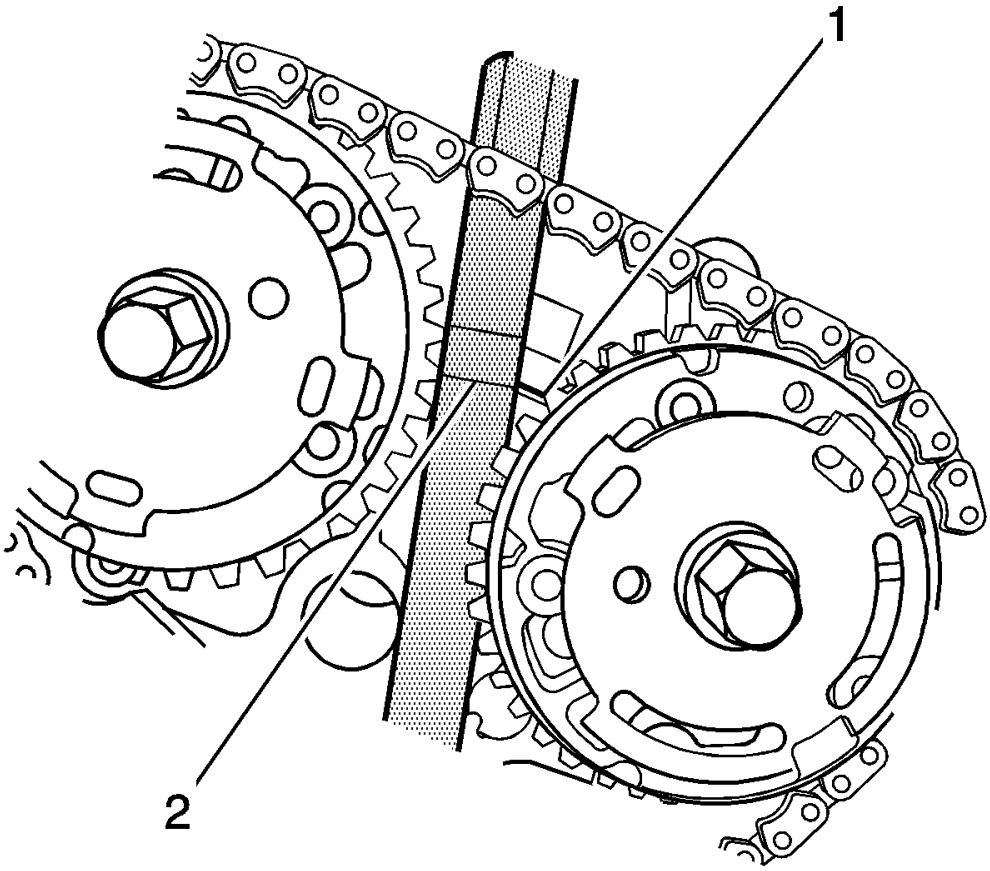

Fig. 170: Inserting Timing Chain Rentention Tool
Courtesy of GENERAL MOTORS COMPANY

8. Unscrew the **EN-48313** tool so that the legs of the tool are retracted.
9. Insert the **EN-48313** tool between the camshaft actuators, rearward of the timing chain until the bottom line that is scribed in the body of the tool (2) is adjacent to the top surface of the cylinder head (1). This is the approximate installed position.

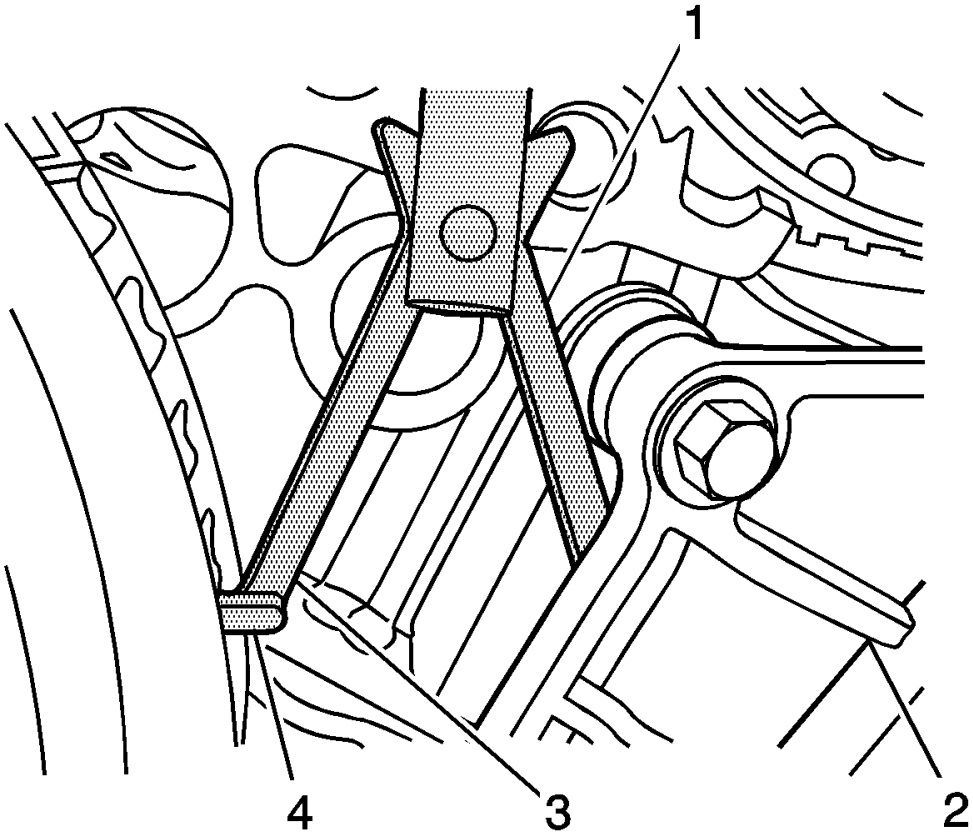

Fig. 171: View Of Feet, Legs & Timing Chain Guide
Courtesy of GENERAL MOTORS COMPANY

NOTE: The engine front cover is removed for clarity in the following graphics, but NOT required to perform the procedure.

10. Ensure that the feet (4) on the legs of the tool are facing the front of the engine.
11. Partially expand the legs (1, 3) of the **EN-48313** tool by turning the T-shaped handle clockwise.
12. Insert the leg of the tool (1) behind the timing chain guide (2).
13. Continue expanding the **EN-48313** tool until the legs (1, 3) contact the timing chain. Do not tighten at this time.

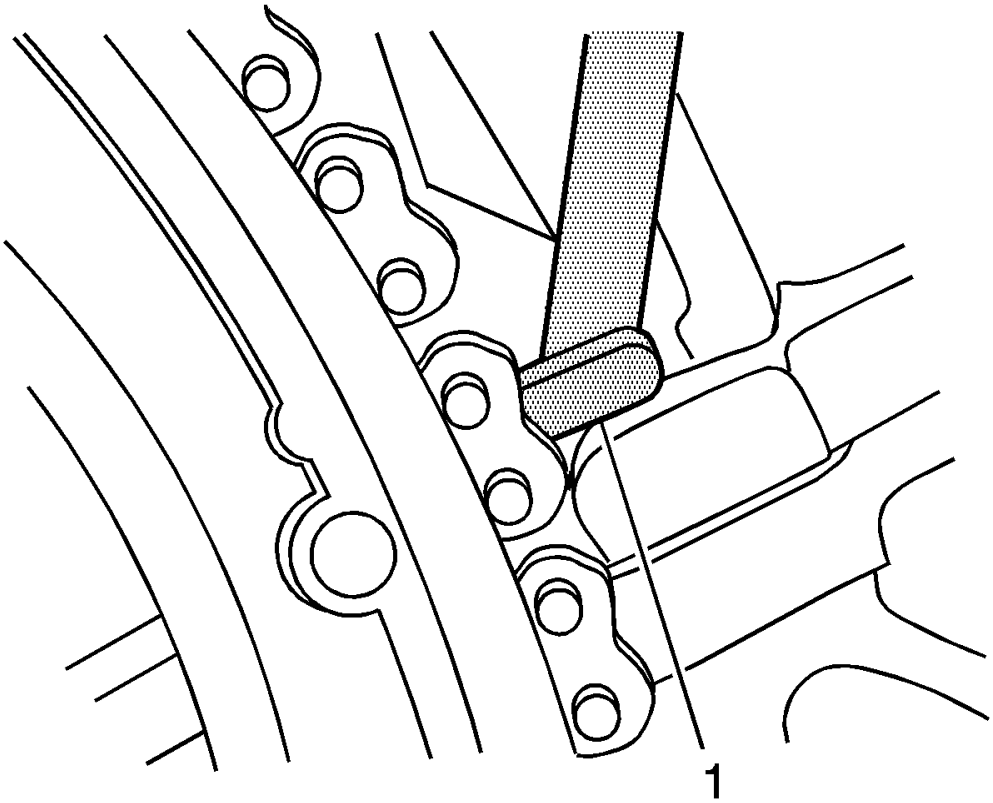

Fig. 172: Foot Of Timing Chain Retention Tool
Courtesy of GENERAL MOTORS COMPANY

NOTE: **Ensure that the foot (1) of the EN-48313 tool is engaged into one of the link pockets to prevent tool slippage during tightening of the EN-48313 tool.**

14. Hand tighten the **EN-48313** tool.
15. Use an open end wrench on the hex cast into the left intake and exhaust camshafts and rotate the camshafts toward each other in order to create slack in the chain between the actuators.

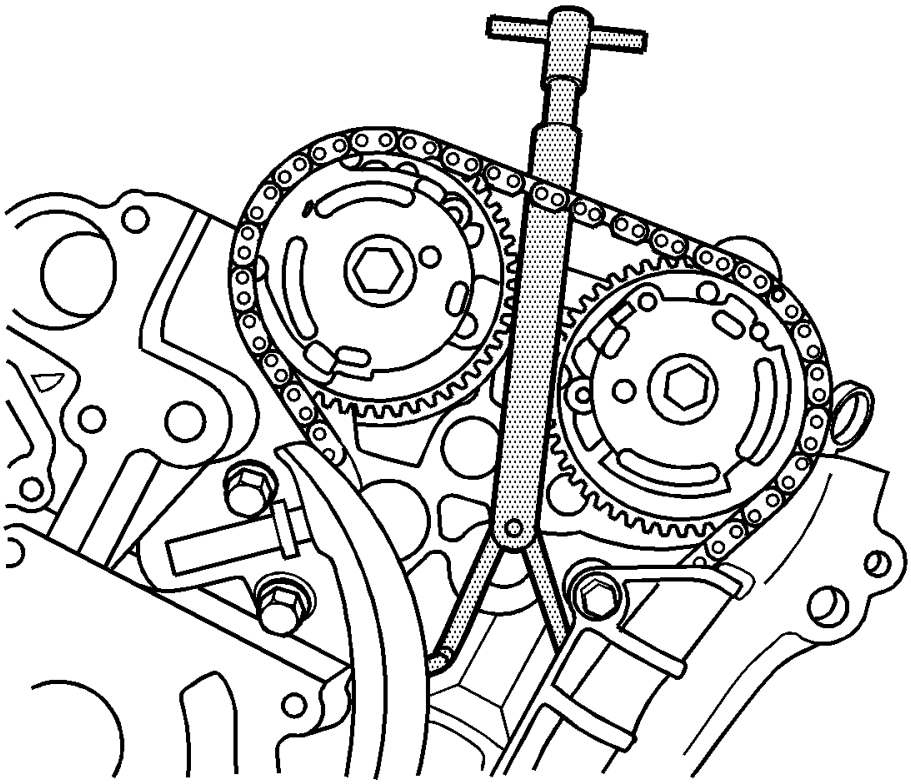

Fig. 173: Timing Chain Retention Tool
Courtesy of GENERAL MOTORS COMPANY

16. The **EN-48313** tool is now properly installed to hold the timing chain in position.

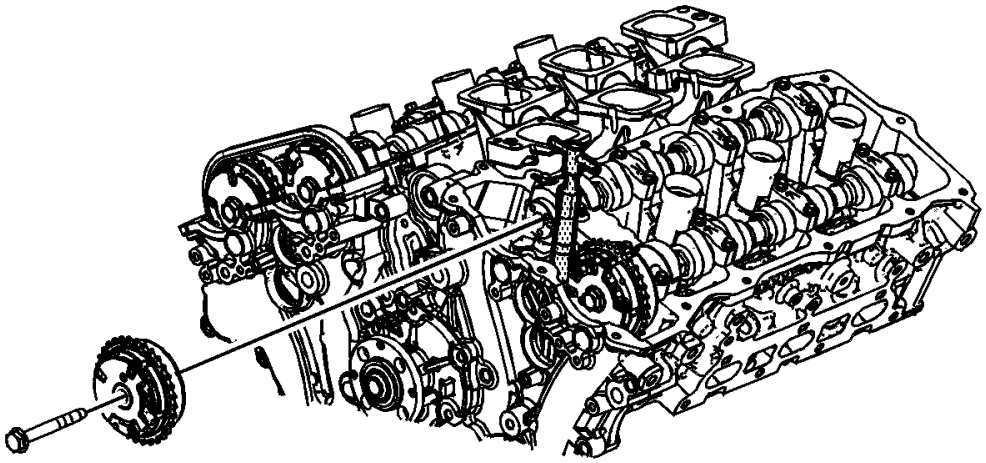

Fig. 174: View Of Exhaust Camshaft Position Actuator Bolt
Courtesy of GENERAL MOTORS COMPANY

17. Use an open end wrench on the hex cast into the camshaft in order to prevent engine rotation when loosening the camshaft position actuator bolt.
18. If replacing the exhaust camshaft position actuator, then remove the bolt and the actuator.
19. If replacing the intake camshaft position actuator, then remove the bolt and the actuator.
20. If removing both the exhaust and intake camshaft actuators, the timing chain can be draped over the **EN-48313** tool once the actuators have been removed.
21. Rotate the actuator in order to align the opening in the actuator reluctor wheel with the cam sensor boss in the front cover, to allow actuator removal.
22. Remove the camshaft thrust washer.

Installation Procedure

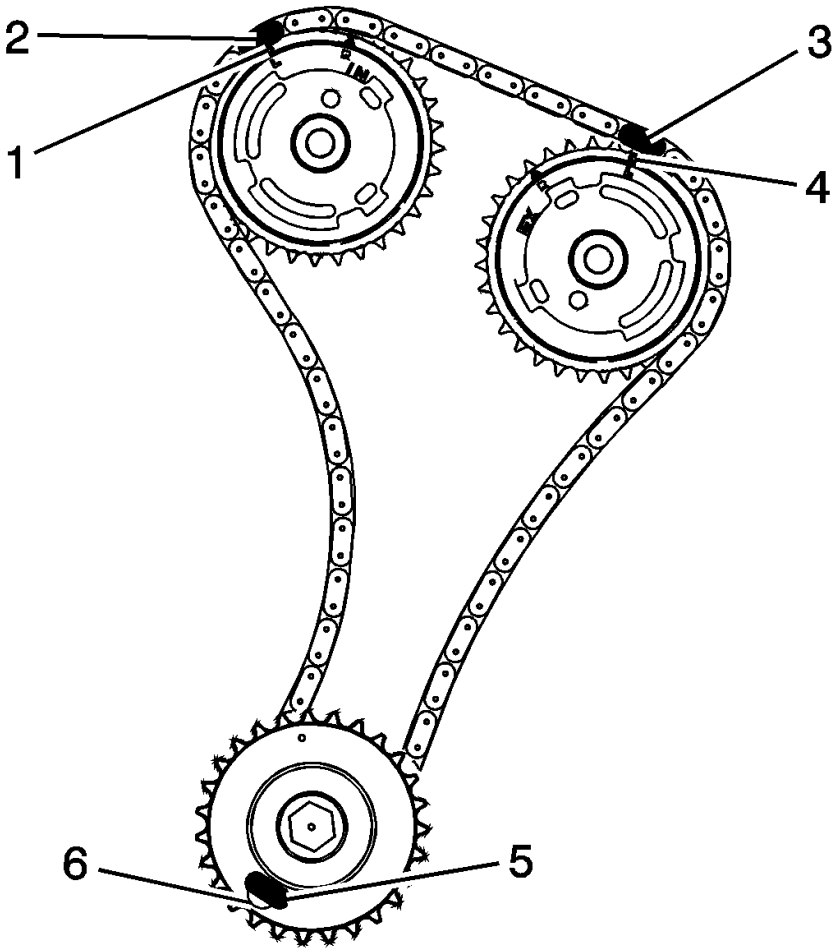

Fig. 175: Locating Left Secondary Camshaft Drive Chain Timing Marks
Courtesy of GENERAL MOTORS COMPANY

NOTE: Ensure that the camshaft timing chain and the camshaft position actuators are marked for proper assembly.

1. Align the exhaust camshaft actuator alignment mark (1) to the timing chain alignment mark (2) made during disassembly.
2. Ensure that the intake camshaft actuator alignment mark (4) and the timing chain alignment mark (3) are also aligned.
3. Position the exhaust camshaft actuator to the camshaft and install the actuator bolt hand tight.
4. Remove the **EN-48313** tool.

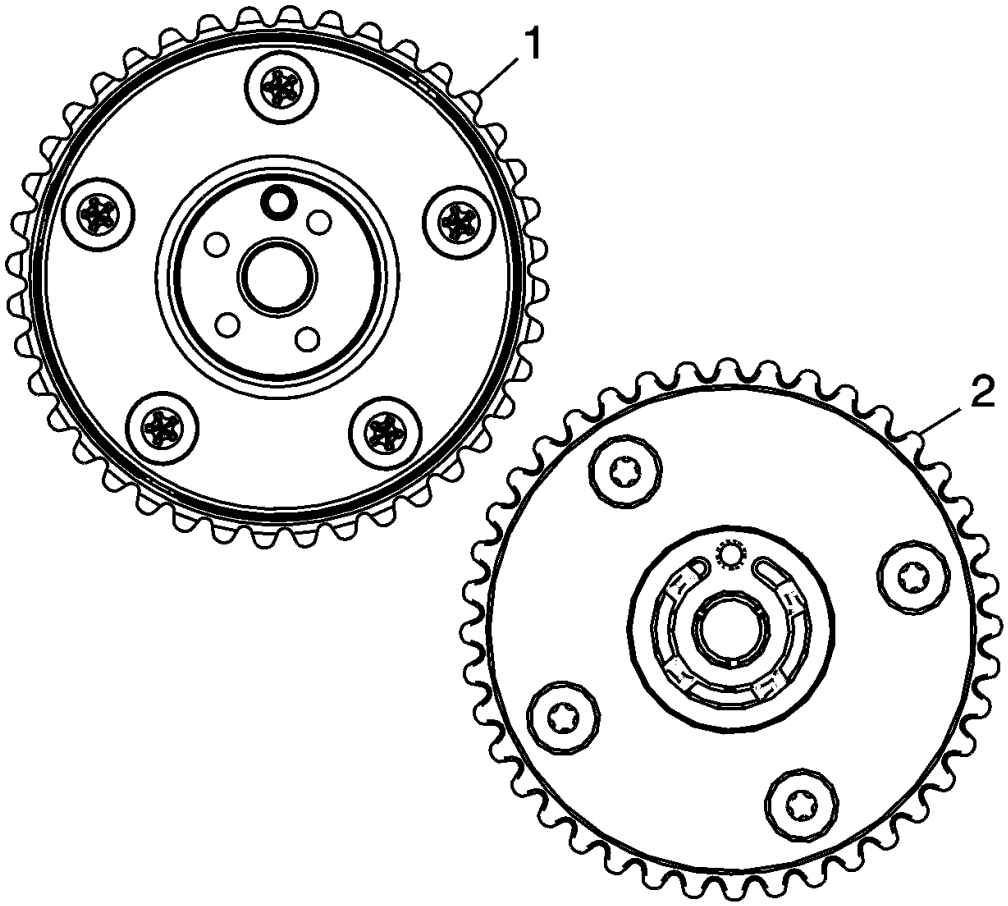

Fig. 176: Identifying Camshaft Position Actuators
Courtesy of GENERAL MOTORS COMPANY

NOTE:

- **The camshaft position actuator will vary depending on application.**
- **Camshaft thrust washers must only be installed on applications that had thrust washers present during removal of the camshaft position actuators. Do not install washers on applications if they are not already present.**

5. If equipped, ensure the proper camshaft thrust washer is used. Use a 1.6 mm (0.063 in) thrust washer on applications that have 5 attaching screws on the back side of the camshaft position actuator (1). Use a 1.1 mm (0.043 in) thick thrust washer with yellow speckles on applications that have 4 attaching screws on the back side of the camshaft position actuator (2).
6. Install the thrust washer, if applicable.

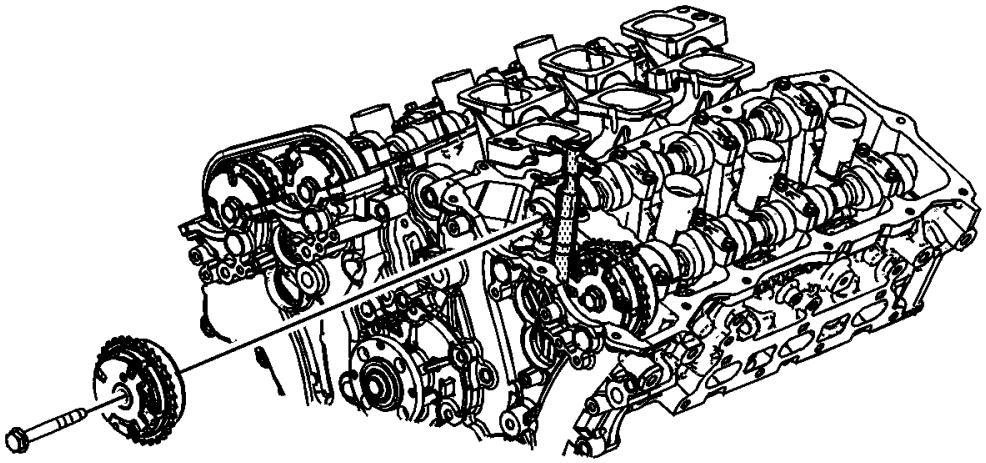

Fig. 177: View Of Exhaust Camshaft Position Actuator Bolt
Courtesy of GENERAL MOTORS COMPANY

CAUTION: Refer to Fastener Caution .

7. If the exhaust camshaft position actuator has been replaced, then tighten the bolt to 58 N.m (43 lb ft).
8. If the intake camshaft position actuator has been replaced, then tighten the bolt to 58 N.m (43 lb ft).
9. If both the exhaust and intake has been replaced, then tighten bolt to 58 N.m (43 lb ft).
10. Install the left intake and exhaust camshaft position actuator solenoids. Refer to **Camshaft Position Actuator Solenoid Valve Solenoid Replacement - Bank 2 (Left Side) Intake** , and **Camshaft Position Actuator Solenoid Valve Solenoid Replacement - Bank 2 (Left Side) Exhaust** .
11. Install the left intake and exhaust camshaft position sensors. Refer to **Camshaft Position Sensor Replacement - Bank 2 (Left Side) Intake** , and **Camshaft Position Sensor Replacement - Bank 2 (Left Side) Exhaust** .
12. Install the left camshaft cover. Refer to **Camshaft Cover Replacement - Left Side**.
13. Install the intake manifold. Refer to **Intake Manifold Replacement**.

SETTING CAMSHAFT TIMING

NOTE: **Setting the camshaft timing is necessary whenever the camshaft drive system has been disturbed such that the relationship between any chain and sprocket has been lost. Even when only one sprocket is involved, multiple crankshaft rotations will not produce conditions where correct timing can be confirmed.**

Follow the left bank secondary camshaft drive chain replacement procedures to reset the camshaft timing. Refer to **Secondary Camshaft Intermediate Drive Chain Replacement - Left Side**.

CAMSHAFT REPLACEMENT - LEFT SIDE

Removal Procedure

1. Remove the fuel pump. Refer to **Fuel Pump Replacement** .
2. Remove the camshaft position actuators. Refer to **Camshaft Position Actuator Replacement - Bank 2**.

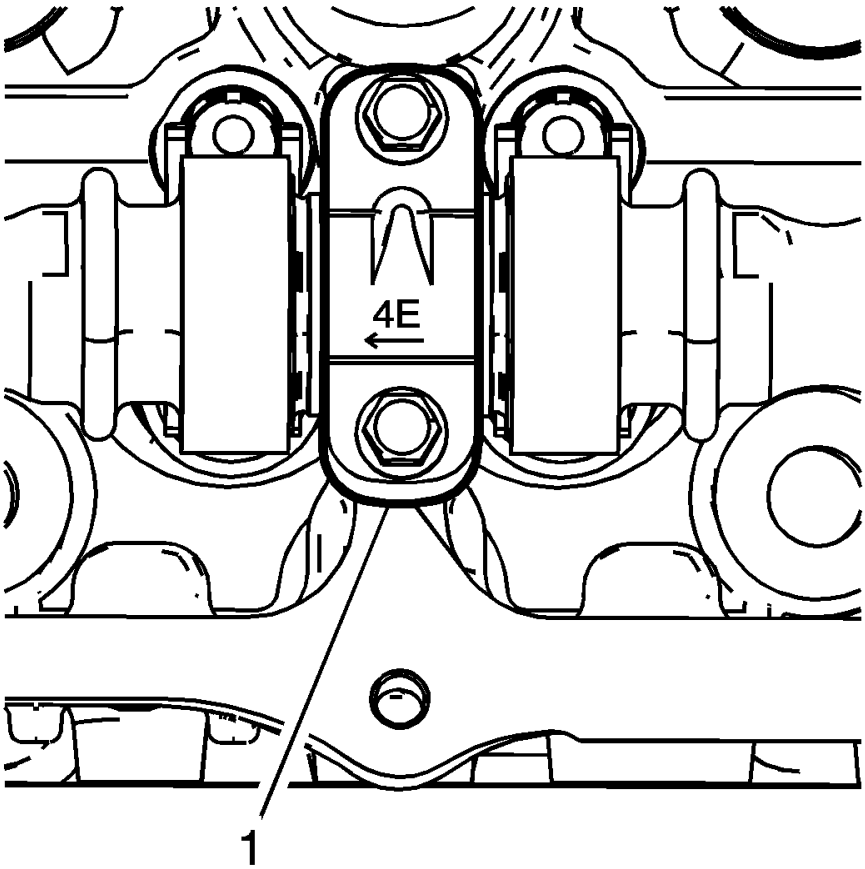

Fig. 178: Bearing Caps
Courtesy of GENERAL MOTORS COMPANY

3. Observe the markings on the bearing caps (1). Each bearing cap is marked in order to identify its location. The markings have the following meanings:
   - The raised feature must always be oriented toward the center of the cylinder head.
   - The I indicates the intake camshaft.
   - The E indicates the exhaust camshaft.
   - The number indicates the journal position from the front of the engine.

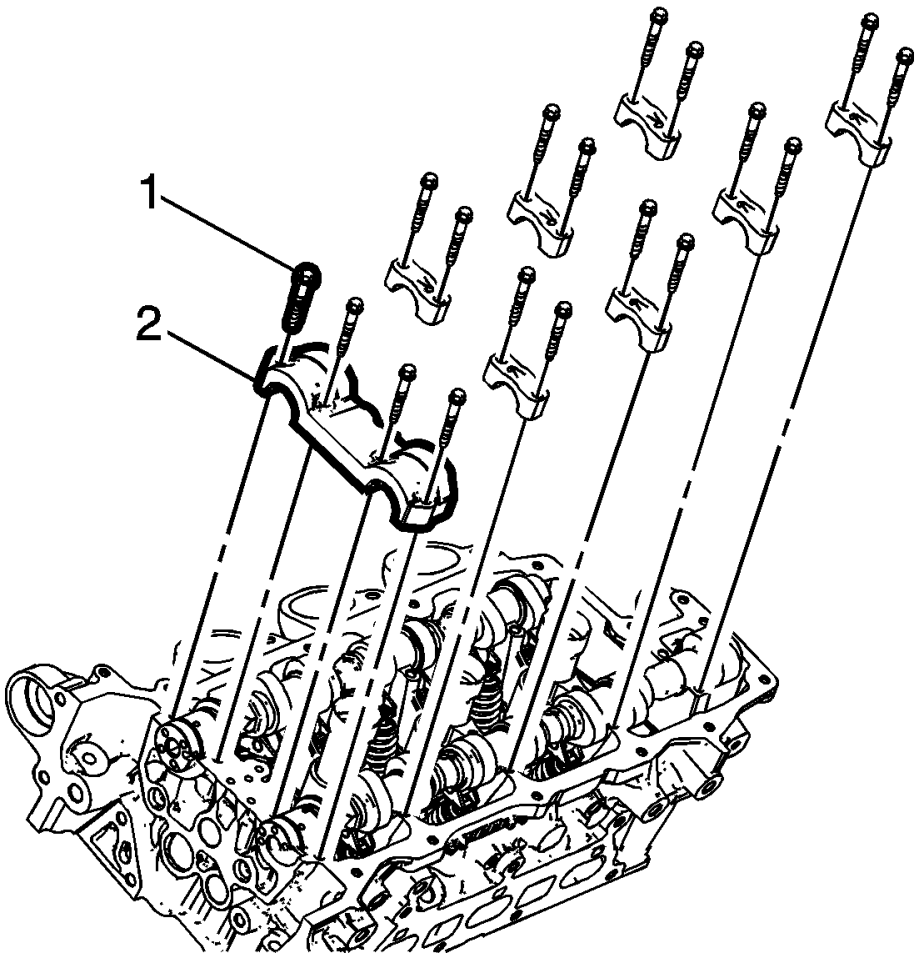

Fig. 179: Bearing Cap Bolts
Courtesy of GENERAL MOTORS COMPANY

4. Remove the camshaft bearing cap bolts (1).
5. Remove the camshaft bearing caps (2).

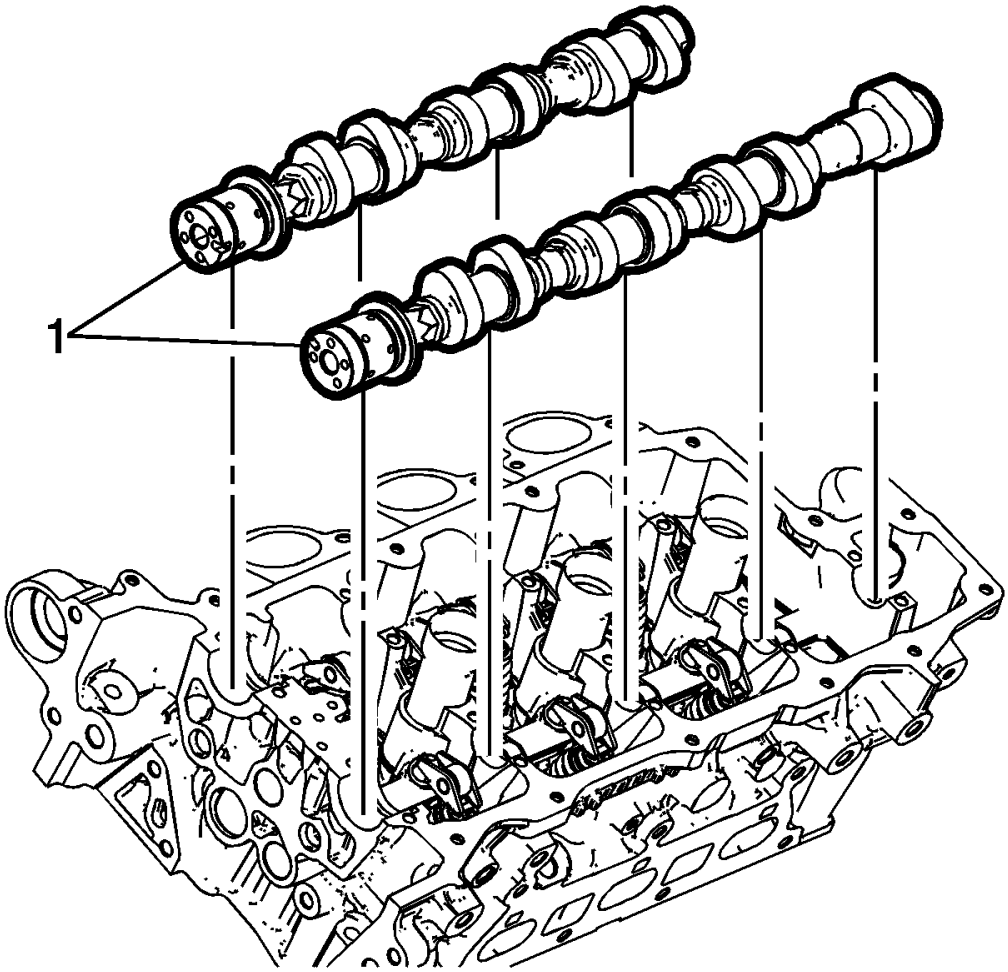

Fig. 180: Camshafts
Courtesy of GENERAL MOTORS COMPANY

NOTE: **Mark the camshafts upon removal to ensure installation is in the correct position.**

6. Remove the camshafts (1).

Installation Procedure

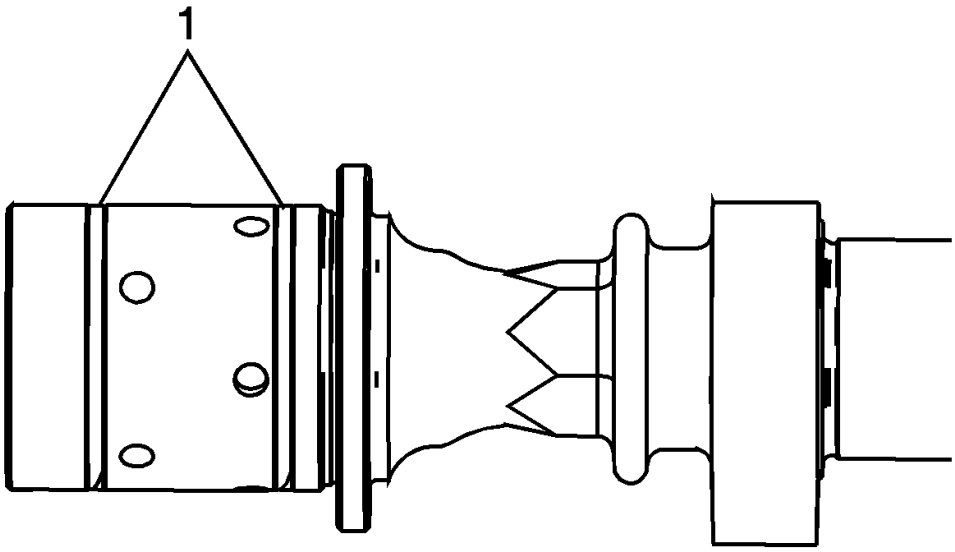

Fig. 181: Locating Camshaft Sealing Rings In Camshaft Grooves
Courtesy of GENERAL MOTORS COMPANY

1. Ensure that the camshaft sealing rings (1) are in place in the camshaft grooves. Camshaft sealing rings must be in place below the surface of the camshaft journal in order to avoid being pinched between the cylinder head and the camshaft caps.

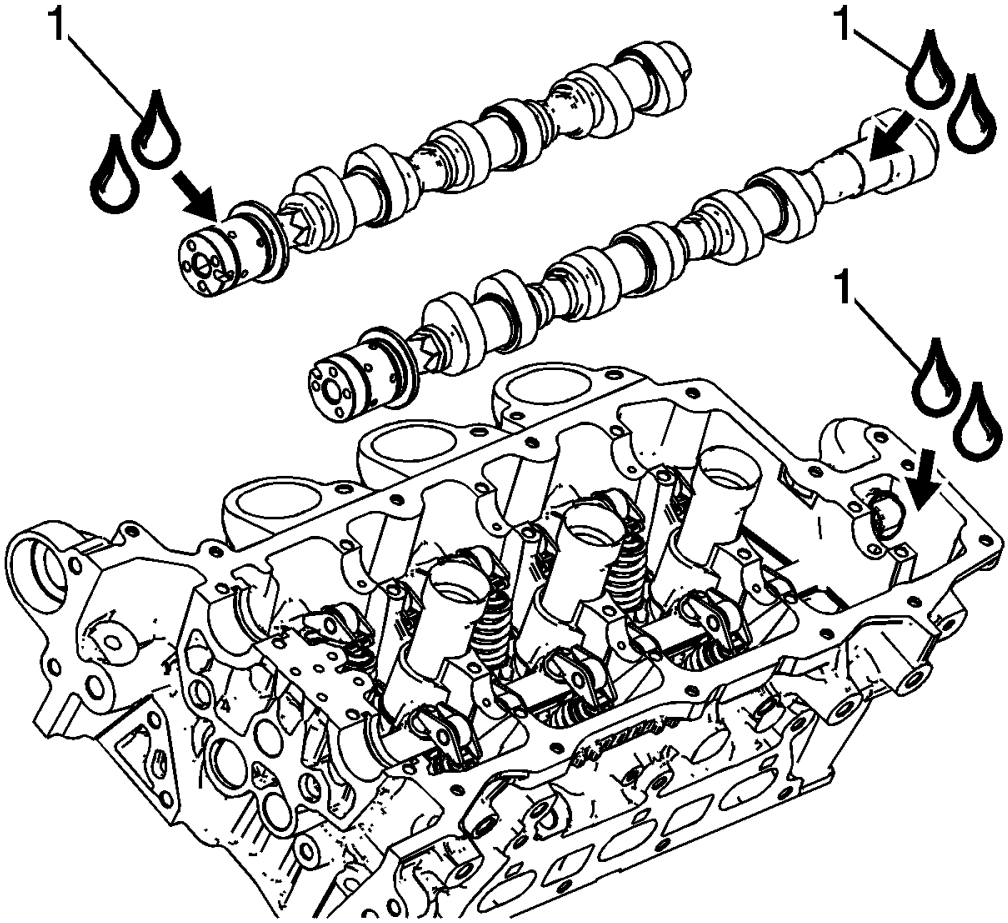

Fig. 182: Camshaft Journal Lubrication Points
Courtesy of GENERAL MOTORS COMPANY

2. Apply a liberal amount of lubricant (1) to the camshaft journals and the left cylinder head camshaft carriers. Refer to **Adhesives, Fluids, Lubricants, and Sealers** , **Adhesives, Fluids, Lubricants, and Sealers (Korea)** for recommended lubricant.

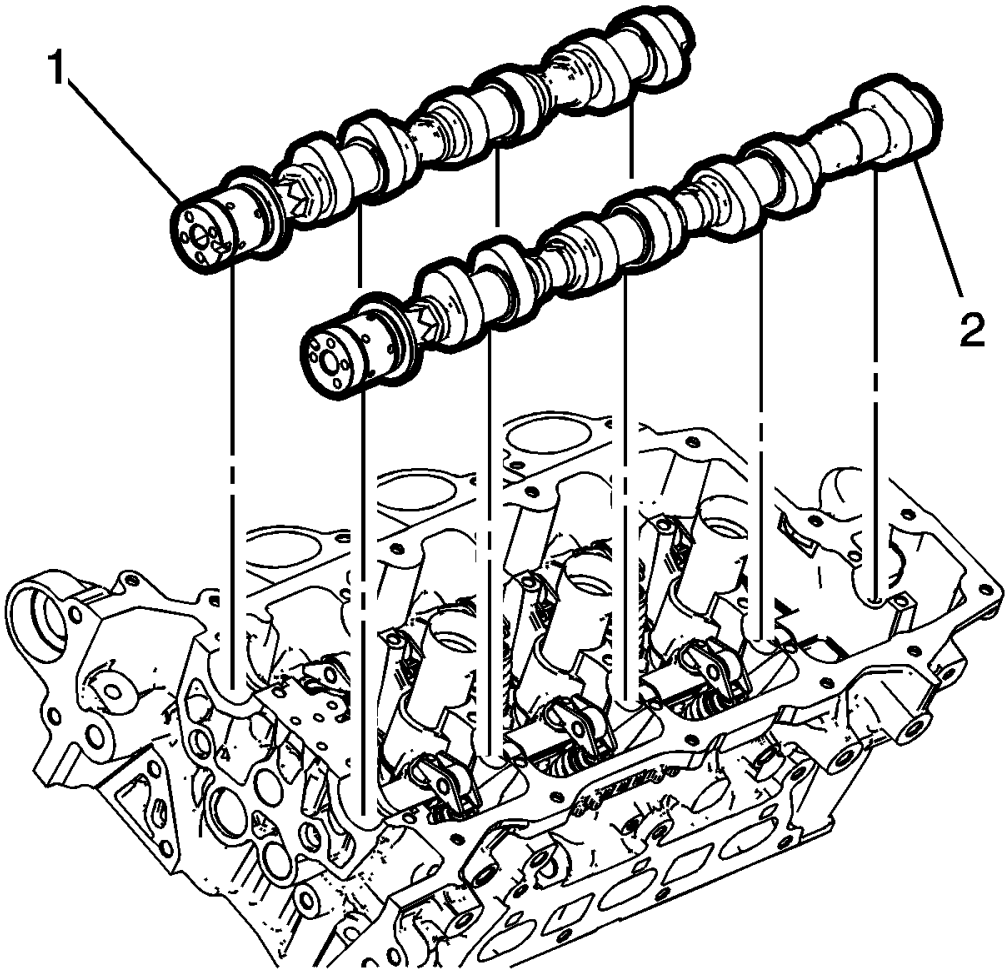

Fig. 183: Camshaft Intake & Exhaust Positioning Points
Courtesy of GENERAL MOTORS COMPANY

3. Place the left intake (1) and left exhaust (2) camshafts in position in the left cylinder head.

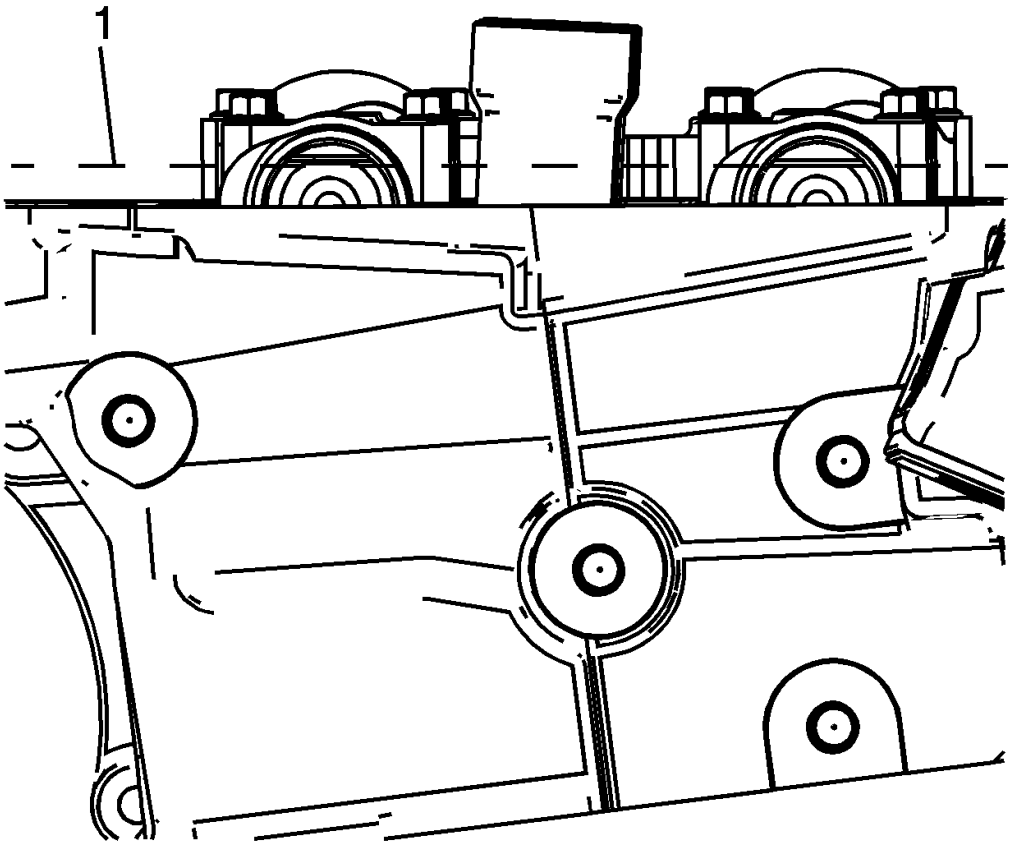

Fig. 184: View Of Camshaft Flats Parallel With Camshaft Cover Rail
Courtesy of GENERAL MOTORS COMPANY

4. Position the camshaft lobes in a neutral position with the flats on the back of the camshafts up and parallel (1) with the left cylinder head camshaft cover rail.

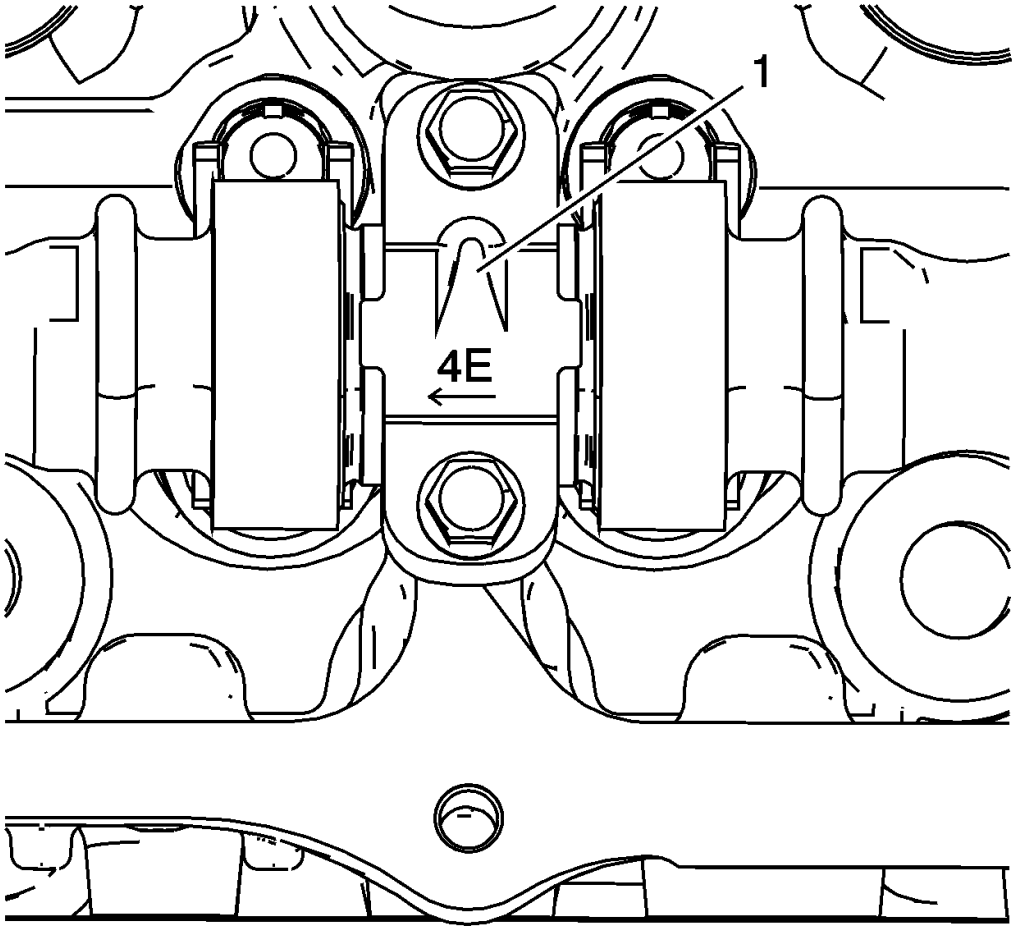

Fig. 185: Left Cylinder Head Camshaft Bearing Cap Markings
Courtesy of GENERAL MOTORS COMPANY

5. Observe the markings on the left cylinder head camshaft bearing caps. Each bearing cap is marked in order to identify its location. The markings have the following meanings:
   - The raised feature (1) must always be oriented toward the center of the cylinder head.
   - The I indicates the intake camshaft.
   - The E indicates the exhaust camshaft.
   - The number 2, 4, 6 indicates the cylinder position from the front of the engine.
6. Apply a liberal amount of lubricant to the camshaft bearing caps. Refer to **Adhesives, Fluids, Lubricants, and Sealers** , **Adhesives, Fluids, Lubricants, and Sealers (Korea)** for recommended lubricant.

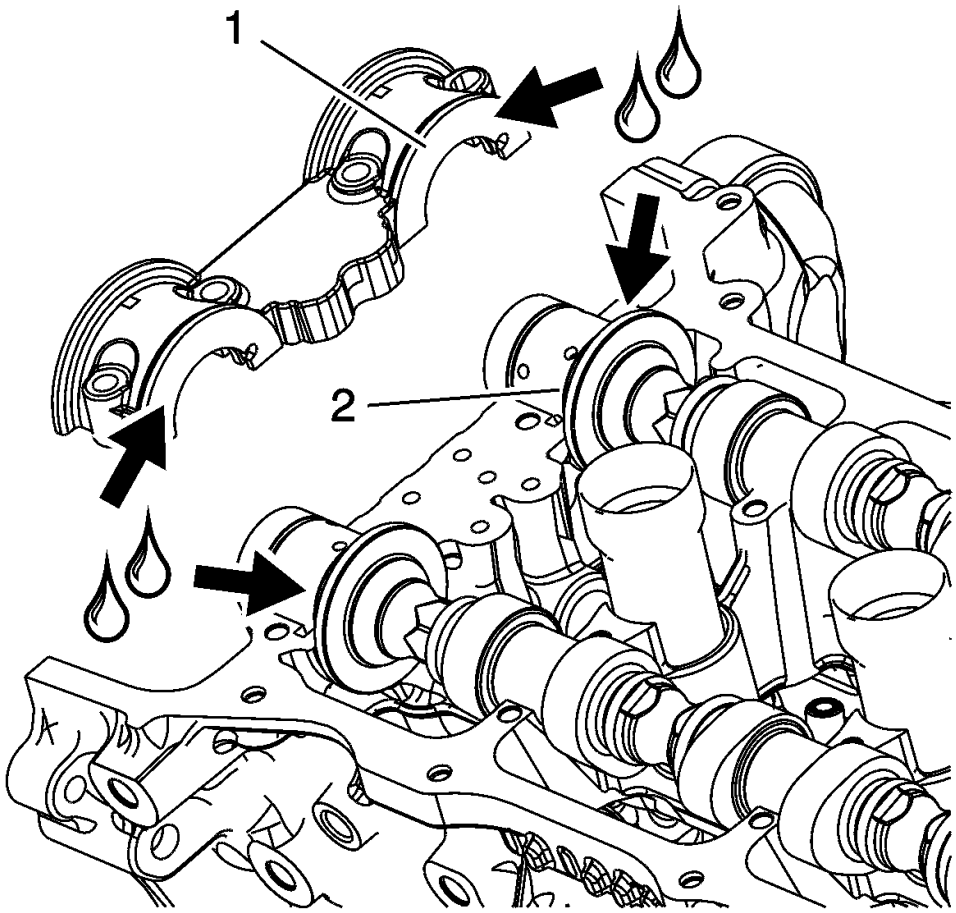

Fig. 186: Camshaft Bearing Cap And Camshaft Thrust Surface
Courtesy of GENERAL MOTORS COMPANY

7. Apply a liberal amount of lubricant to the camshaft bearing cap (1) and camshaft thrust surface (2). Refer to **Adhesives, Fluids, Lubricants, and Sealers** , **Adhesives, Fluids, Lubricants, and Sealers (Korea)** for recommended lubricant.

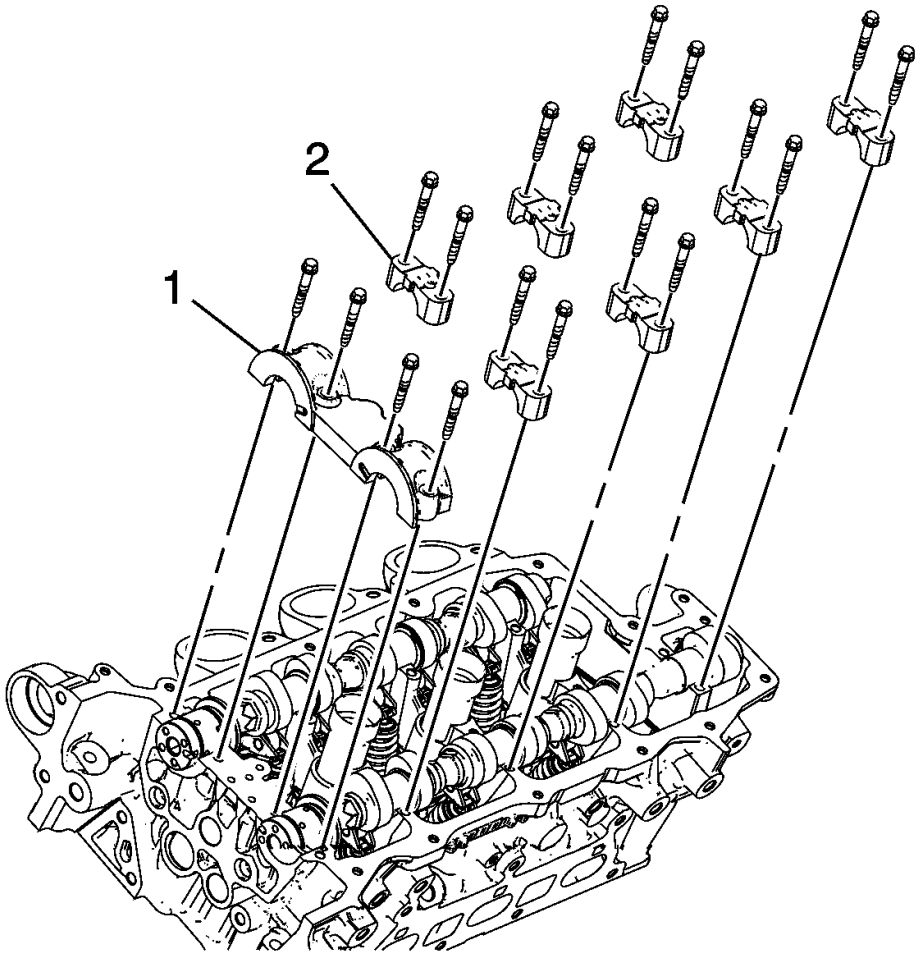

Fig. 187: Camshaft Bearing Caps And Bolts
Courtesy of GENERAL MOTORS COMPANY

8. Install the camshaft bearing thrust cap (1) in the first journal of the left cylinder head.
9. Install the remaining bearing caps (2) with their orientation mark toward the center of the cylinder head.
10. Hand start all the camshaft bearing cap bolts.

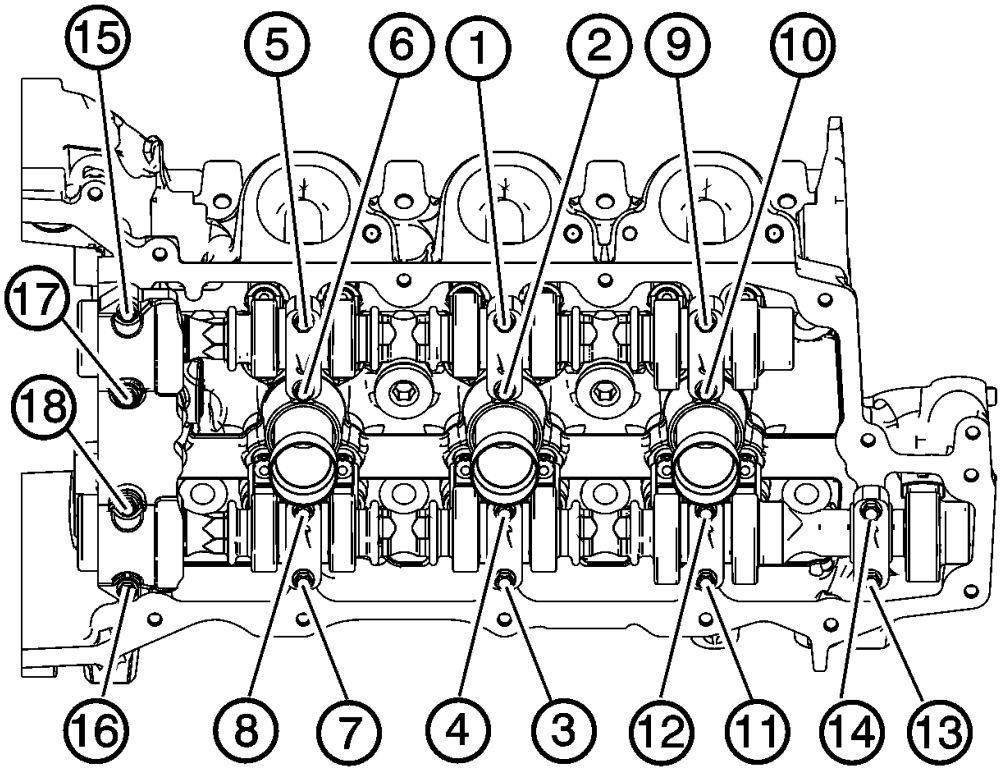

Fig. 188: Identifying Camshaft Bearing Cap Bolt Tightening Sequence
Courtesy of GENERAL MOTORS COMPANY

CAUTION: Refer to Fastener Caution .

11. Tighten the camshaft bearing cap bolts in the sequence shown and tighten to 10 N.m (89 lb in).
12. Loosen the center intake camshaft bearing cap bolts 1, 2 and the center exhaust camshaft bearing cap bolts 3, 4.
13. Retighten the center camshaft bearing cap bolts 1, 2, 3, 4 and retighten the camshaft bearing cap bolts to 10 N.m (89 lb in).
14. Install the camshaft position actuators. Refer to **Camshaft Position Actuator Replacement - Bank 2**.
15. Install the fuel pump. Refer to **Fuel Pump Replacement** .

CAMSHAFT REPLACEMENT - RIGHT SIDE

Removal Procedure

1. Remove the camshaft position actuators. Refer to **Camshaft Position Actuator Replacement - Bank 1** .

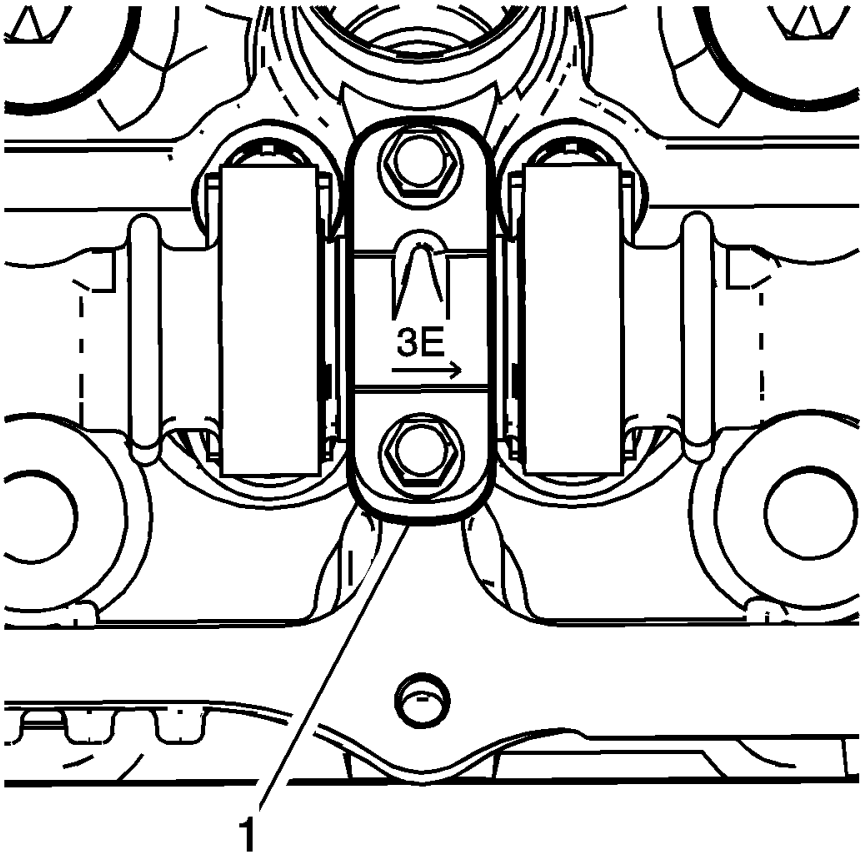

Fig. 189: Bearing Cap Markings
Courtesy of GENERAL MOTORS COMPANY

2. Observe the markings on the bearing caps (1). Each bearing cap is marked in order to identify its location. The markings have the following meanings:
   - The raised feature must always be oriented toward the center of the cylinder head.
   - The I indicates the intake camshaft.
   - The E indicates the exhaust camshaft.
   - The number indicates the journal position from the front of the engine.

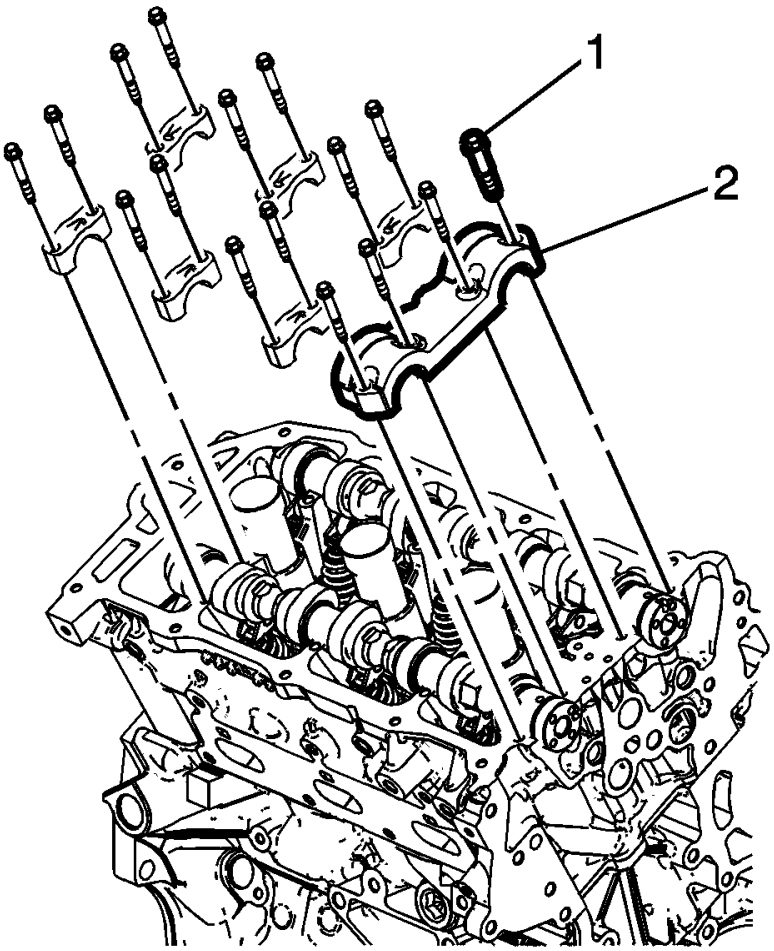

Fig. 190: Camshaft Bearing Caps & Bolts
Courtesy of GENERAL MOTORS COMPANY

3. Remove the camshaft bearing cap bolts (1).
4. Remove the camshaft bearing caps (2).

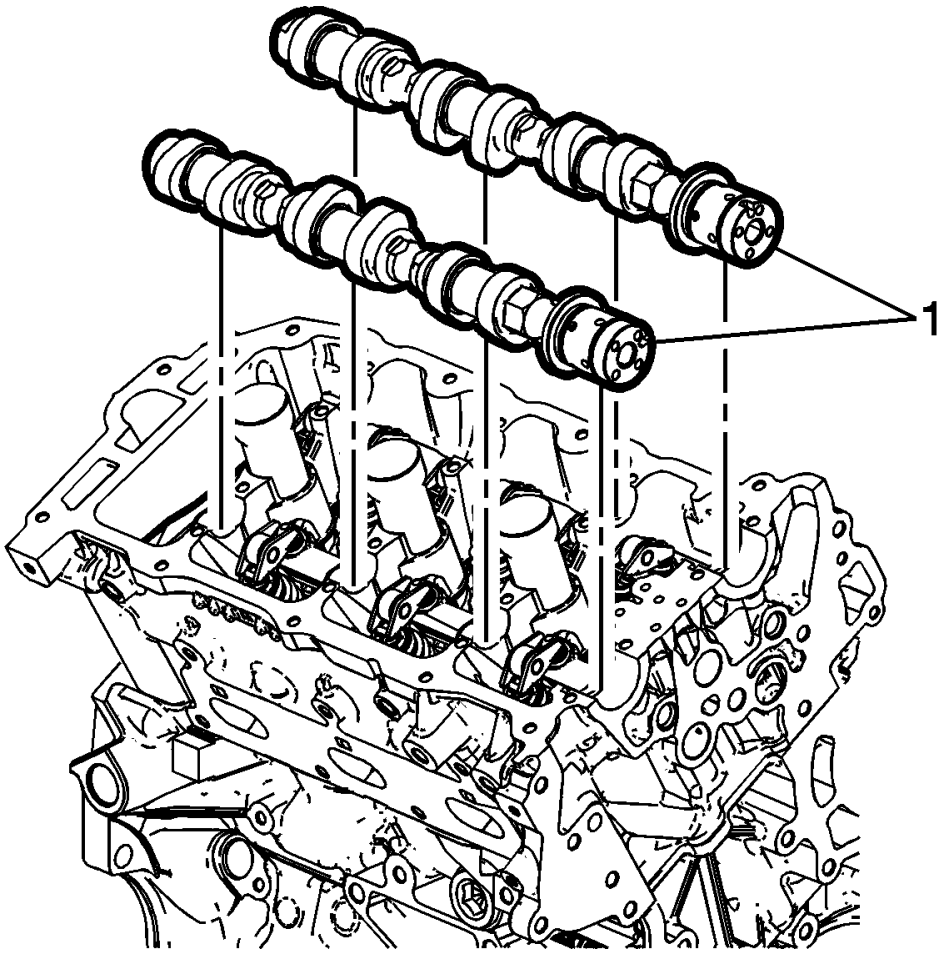

Fig. 191: Camshafts
Courtesy of GENERAL MOTORS COMPANY

IMPORTANT: Mark the camshafts upon removal to ensure installation is in the correct position.

5. Remove the camshafts (1).

Installation Procedure

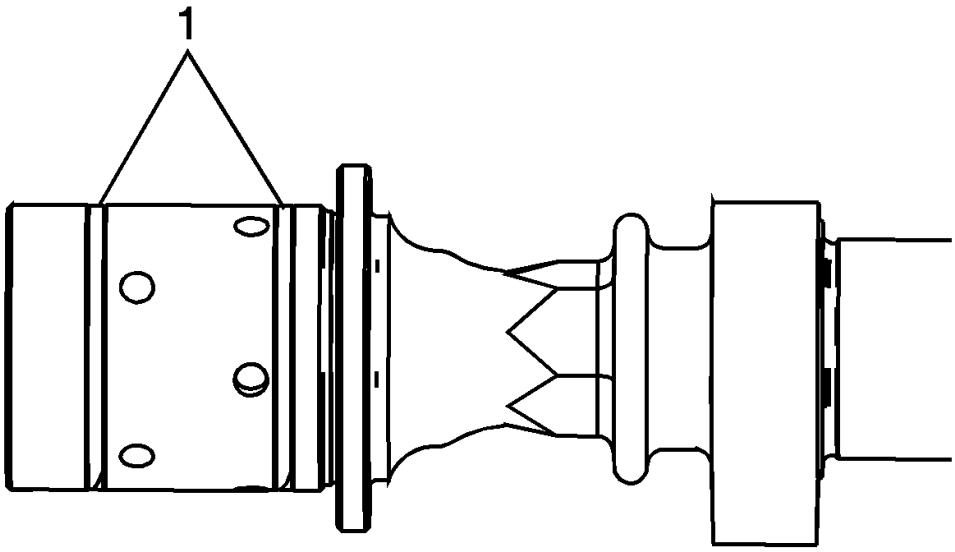

Fig. 192: Locating Camshaft Sealing Rings In Camshaft Grooves
Courtesy of GENERAL MOTORS COMPANY

1. Ensure that the camshaft sealing rings (1) are in place in the camshaft grooves. Camshaft sealing rings must be in place below the surface of the camshaft journal in order to avoid being pinched between the cylinder head and the camshaft caps.

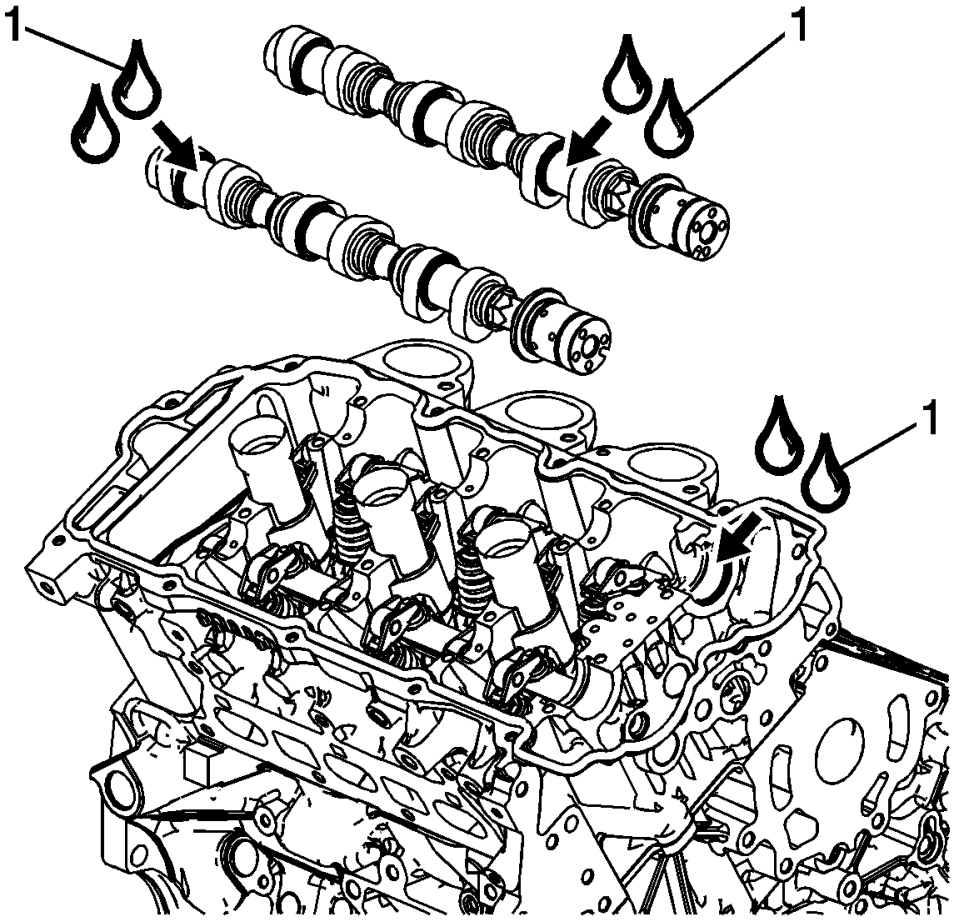

Fig. 193: Right Cylinder Head Camshaft Lubrication Points
Courtesy of GENERAL MOTORS COMPANY

2. Apply a liberal amount of lubricant (1) to the camshaft journals and the right cylinder head camshaft carriers. Refer to **Adhesives, Fluids, Lubricants, and Sealers** , **Adhesives, Fluids, Lubricants, and Sealers (Korea)** for recommended lubricant.

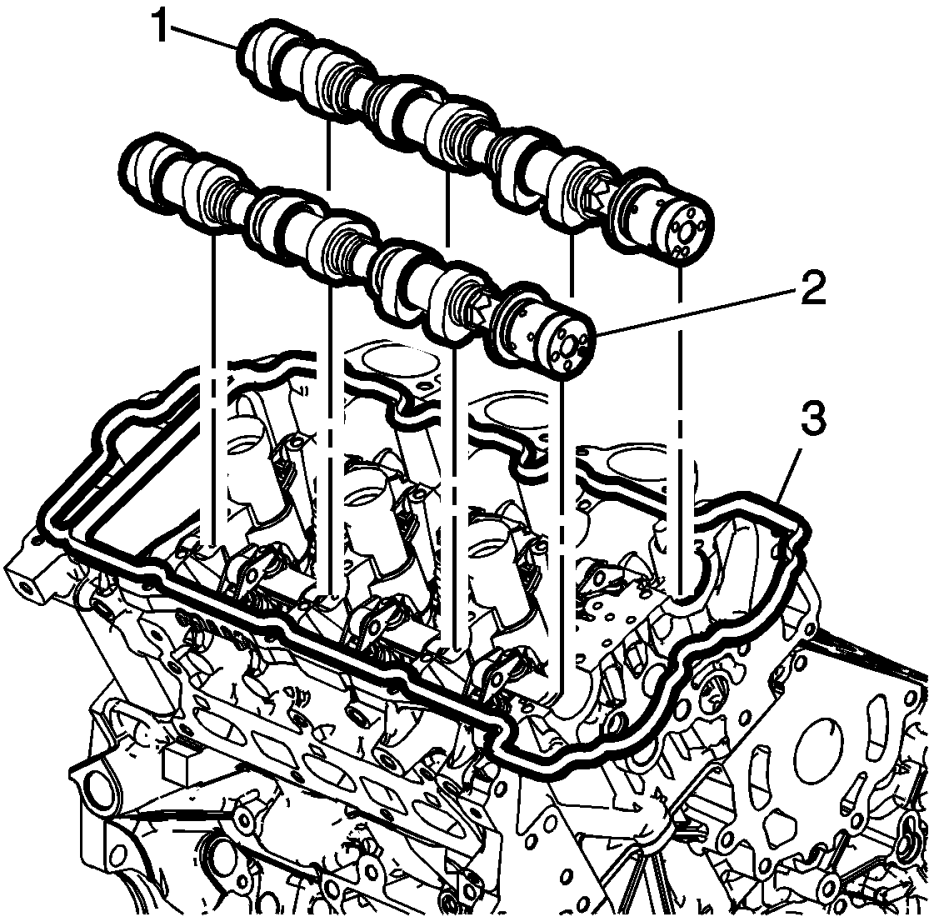

Fig. 194: Right Cylinder Head Camshaft Intake & Exhaust Positioning Points
Courtesy of GENERAL MOTORS COMPANY

3. Place the right intake (1) and right exhaust (2) camshafts in position in the right cylinder head (3).

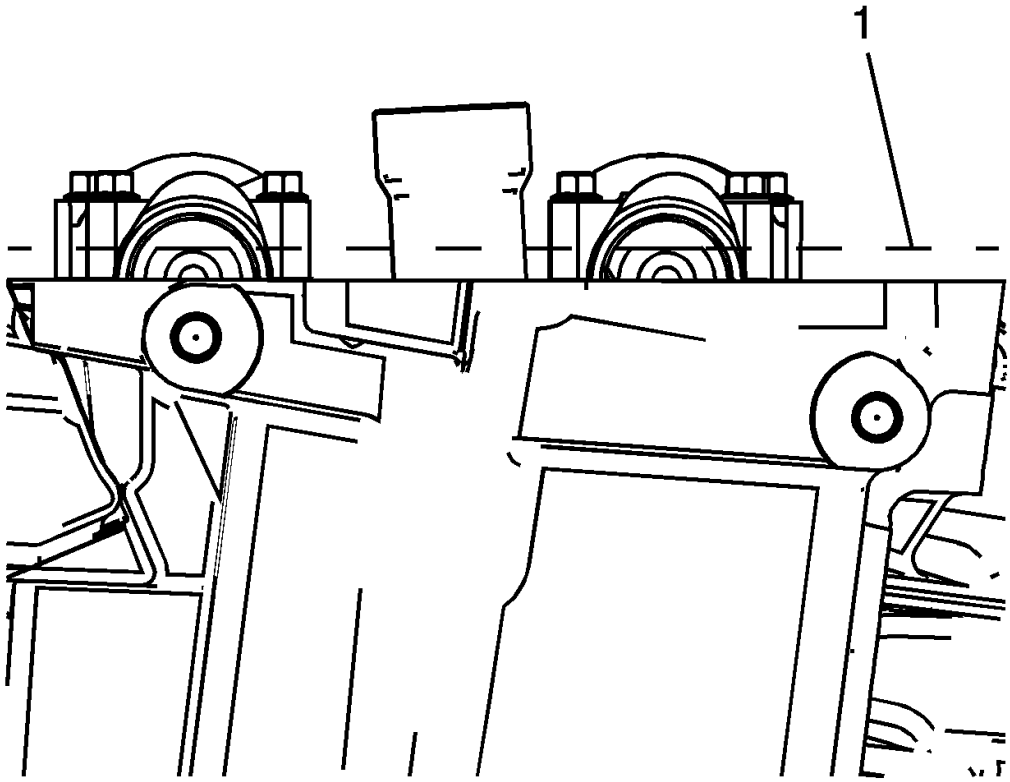

Fig. 195: Identifying Camshaft Neutral (Low Tension) Position
Courtesy of GENERAL MOTORS COMPANY

4. Position the camshaft lobes in a neutral position with the flats on the back of the camshafts up and parallel (1) with the right cylinder head camshaft cover rail.

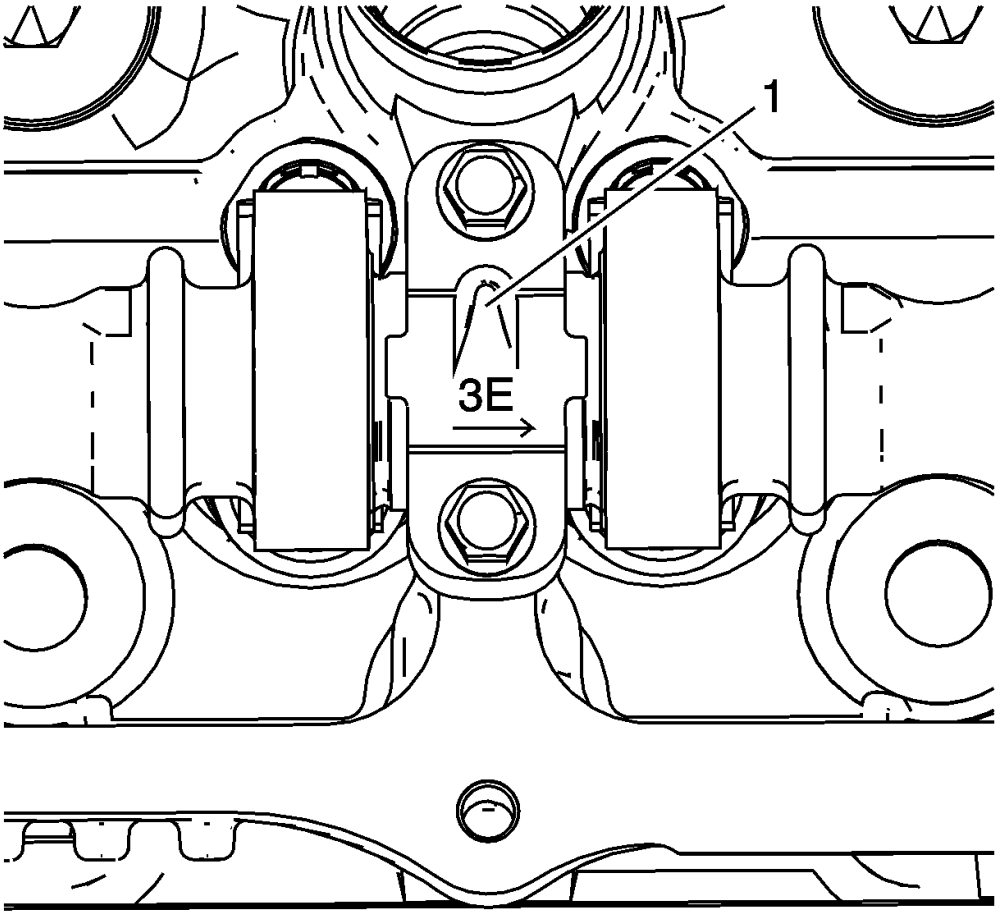

Fig. 196: Right Cylinder Head Camshaft Bearing Cap Markings
Courtesy of GENERAL MOTORS COMPANY

5. Observe the markings on the right cylinder head camshaft bearing caps. Each bearing cap is marked in order to identify its location. The markings have the following meanings:
   - The raised feature (1) must always be oriented toward the center of the cylinder head.
   - The I indicates the intake camshaft.
   - The E indicates the exhaust camshaft.
   - The number 1, 3, 5 indicates the cylinder position from the front of the engine.
6. Apply a liberal amount of lubricant to the camshaft bearing caps. Refer to **Adhesives, Fluids, Lubricants, and Sealers** , **Adhesives, Fluids, Lubricants, and Sealers (Korea)** for recommended lubricant.

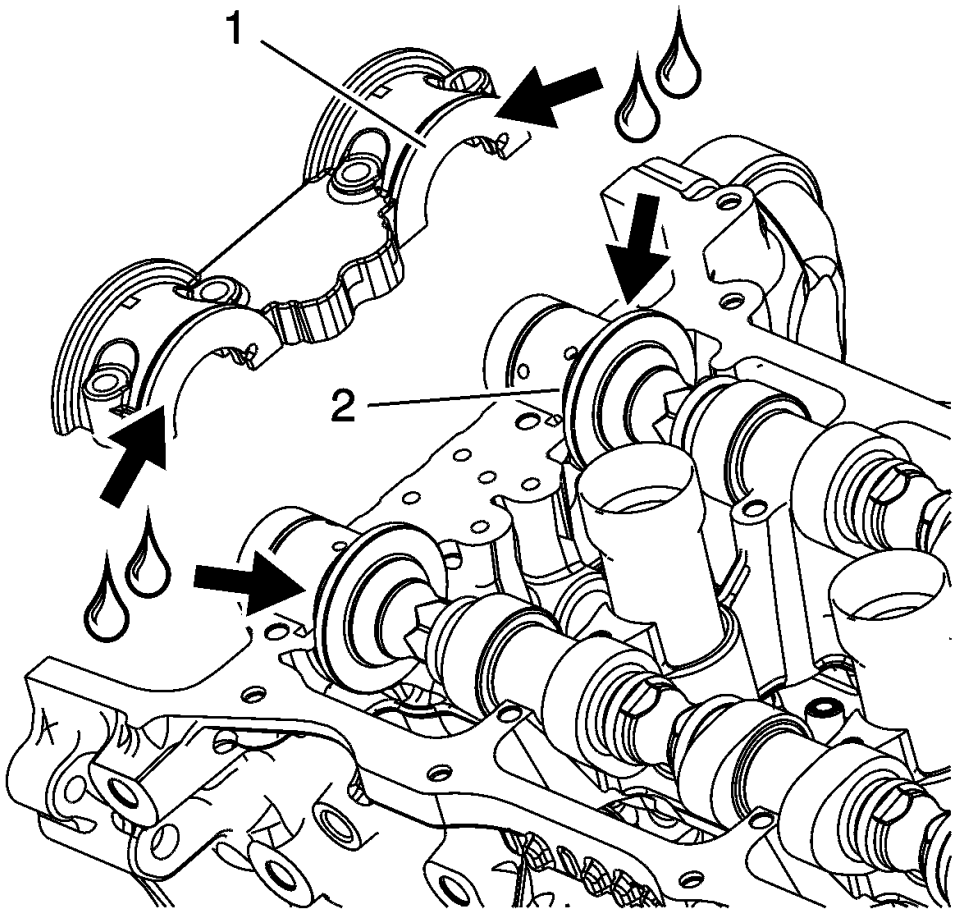

Fig. 197: Camshaft Bearing Cap And Camshaft Thrust Surface
Courtesy of GENERAL MOTORS COMPANY

7. Apply a liberal amount of lubricant to the camshaft bearing cap (1) and camshaft thrust surface (2). Refer to **Adhesives, Fluids, Lubricants, and Sealers** , **Adhesives, Fluids, Lubricants, and Sealers (Korea)** for recommended lubricant.

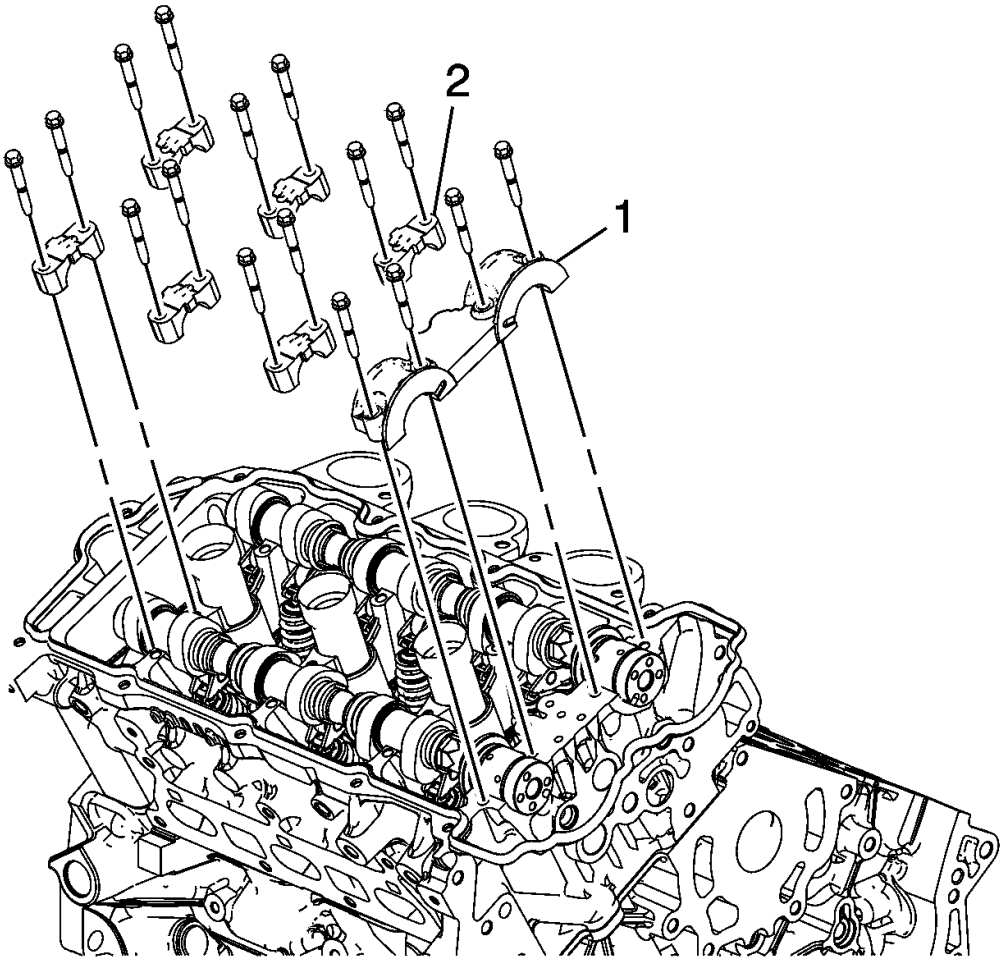

Fig. 198: Camshaft Bearing Caps And Bolts
Courtesy of GENERAL MOTORS COMPANY

8. Install the camshaft bearing thrust caps (1) in the first journal of the right cylinder head.
9. Install the remaining bearing caps (2) with their orientation mark toward the center of the cylinder head.
10. Hand start all the camshaft bearing cap bolts.

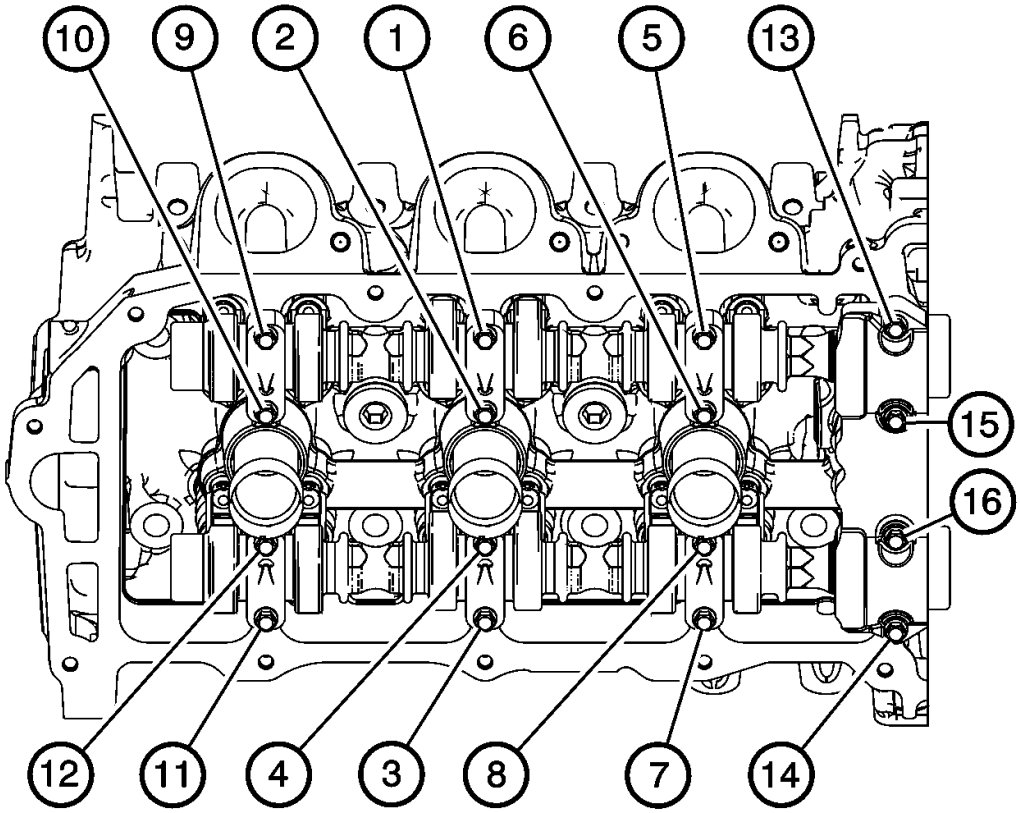

Fig. 199: Camshaft Bearing Cap Bolts Tighten Sequence
Courtesy of GENERAL MOTORS COMPANY

CAUTION: Refer to Fastener Caution .

CAUTION: This vehicle is equipped with torque-to-yield or single use fasteners. Install a NEW torque-to-yield or single use fastener when installing this component. Failure to replace the torque-to-yield or single use fastener could cause damage to the vehicle or component.

11. Tighten the camshaft bearing cap bolts in the sequence shown and tighten to 10 N.m (89 lb in).
12. Loosen the center intake camshaft bearing cap bolts (1, 2) and the center exhaust camshaft bearing cap bolts (3, 4).
13. Retighten the center camshaft bearing cap bolts (1, 2, 3, 4) and retighten the camshaft bearing cap bolts to 10 N.m (89 lb in).
14. Install the camshaft position actuators. Refer to **Camshaft Position Actuator Replacement - Bank 1** .

VALVE ROCKER ARM REPLACEMENT - LEFT SIDE

Removal Procedure

1. Remove the applicable camshaft(s). Refer to **Camshaft Replacement - Left Side**.

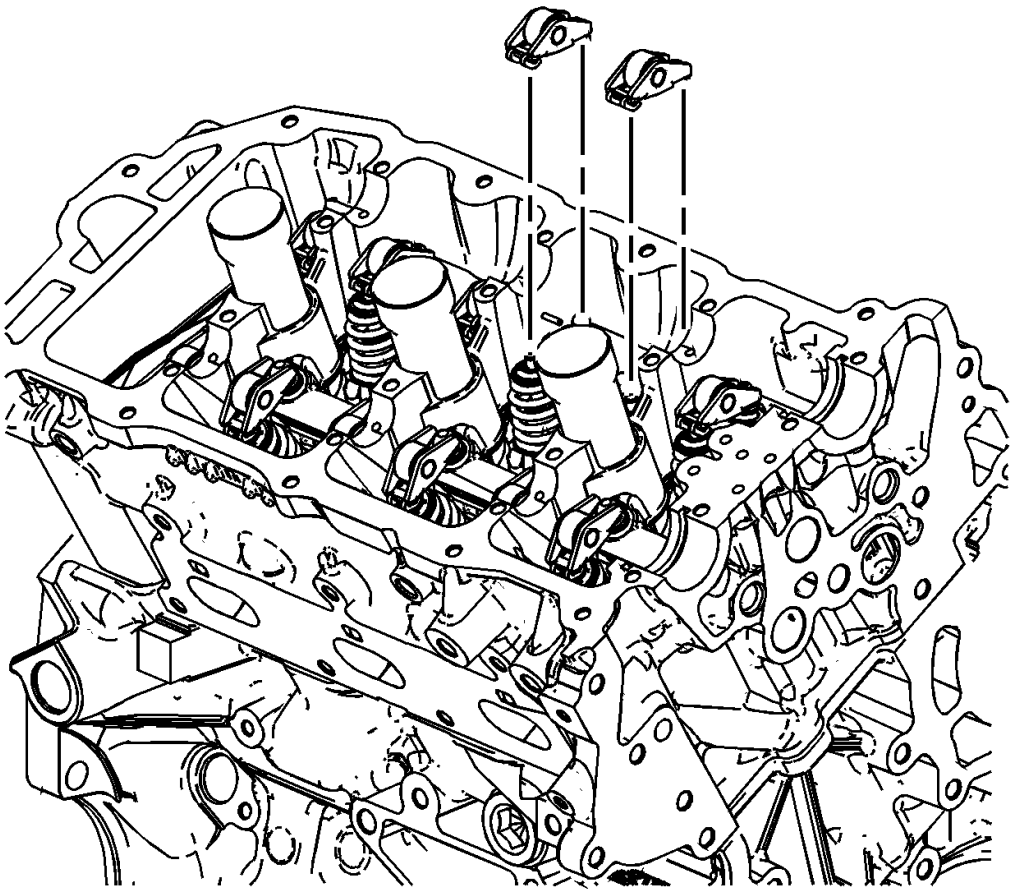

Fig. 200: Identifying Valve Rocker Arms
Courtesy of GENERAL MOTORS COMPANY

2. Remove the rocker arms. Refer to **Valve Rocker Arm Removal - Left Side** .
3. Clean and inspect the camshaft(s) and the rocker arm(s). Repair or replace as necessary. Refer to **Camshaft Cleaning and Inspection** , and **Valve Rocker Arm Cleaning and Inspection** .

Installation Procedure

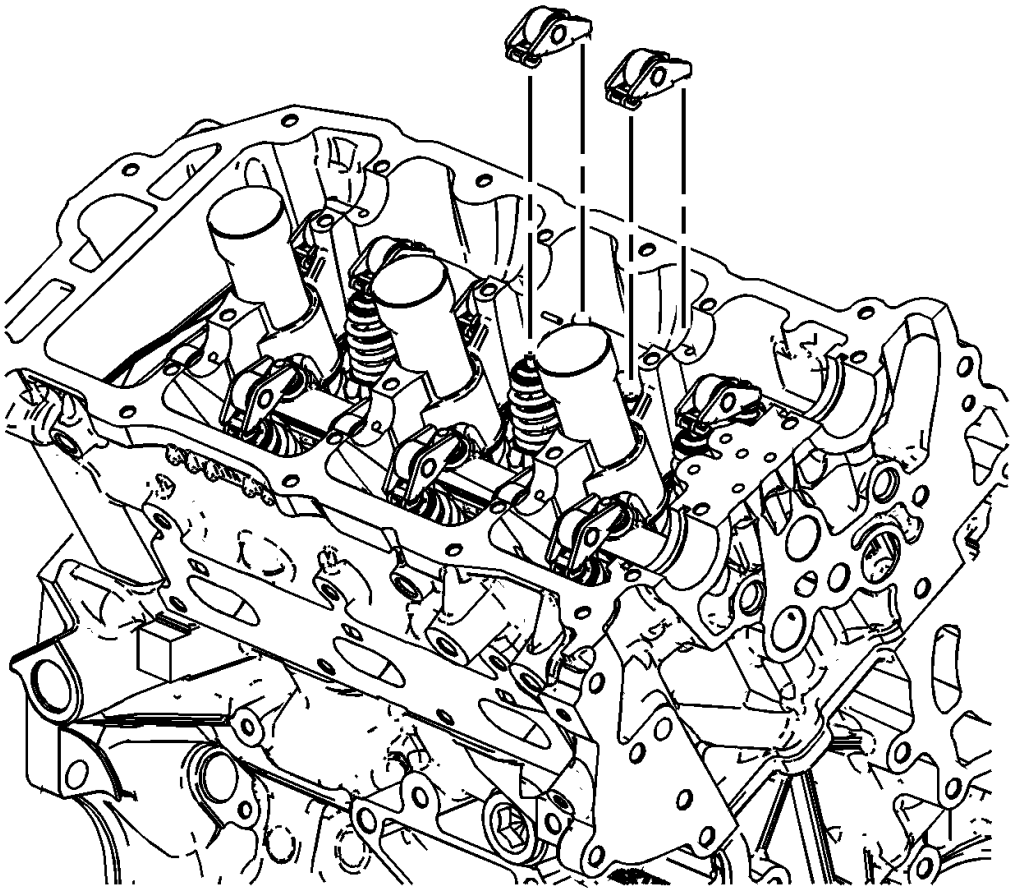

Fig. 201: Identifying Valve Rocker Arms
Courtesy of GENERAL MOTORS COMPANY

1. Install the rocker arms. Refer to **Valve Rocker Arm Installation - Left Side** .
2. Install the applicable camshaft(s). Refer to **Camshaft Replacement - Left Side**.

VALVE ROCKER ARM REPLACEMENT - RIGHT SIDE

Removal Procedure

1. Remove the applicable camshaft(s). Refer to **Camshaft Replacement - Right Side**.

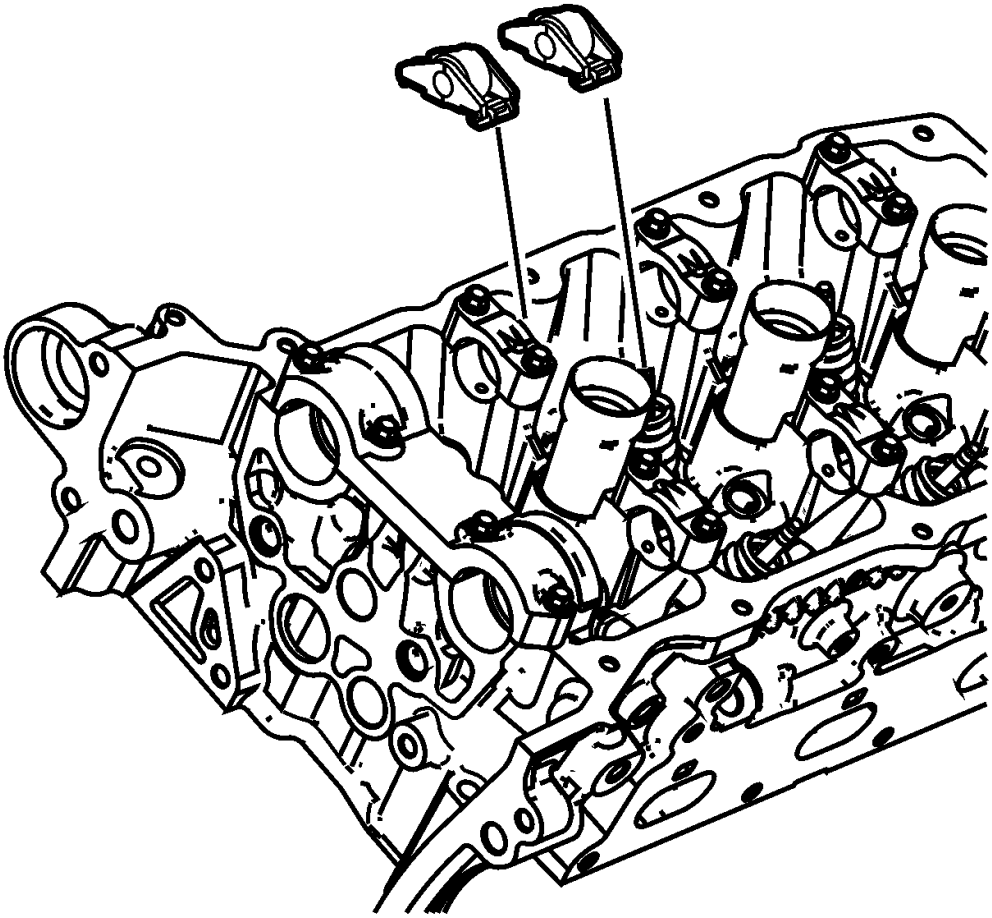

Fig. 202: View Of Valve Rocker Arm
Courtesy of GENERAL MOTORS COMPANY

2. Remove the rocker arms. Refer to **Valve Rocker Arm Removal - Right Side** .
3. Clean and inspect the camshaft(s) and the rocker arm(s). Repair or replace as necessary. Refer to **Camshaft Cleaning and Inspection** , and **Valve Rocker Arm Cleaning and Inspection** .

Installation Procedure

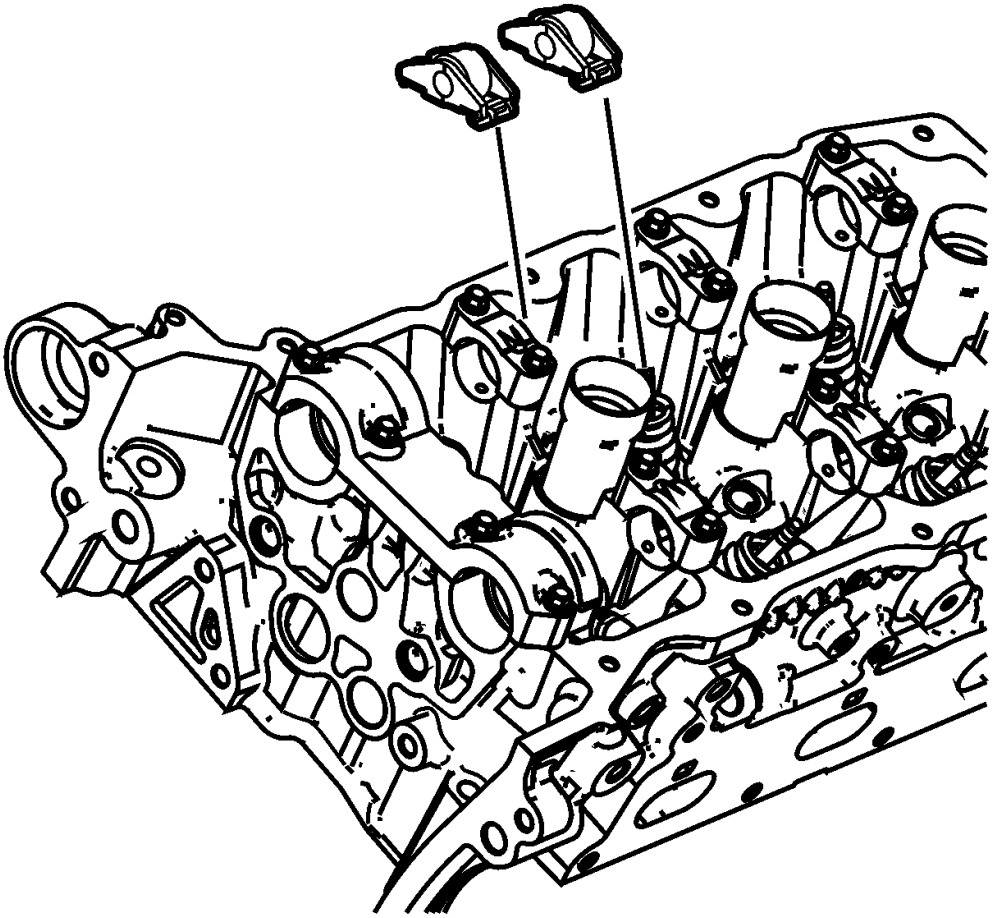

Fig. 203: View Of Valve Rocker Arm
Courtesy of GENERAL MOTORS COMPANY

1. Install the rocker arms. Refer to **Valve Rocker Arm Installation - Right Side** .
2. Install the applicable camshaft(s). Refer to **Camshaft Replacement - Right Side**.

VALVE LIFTER REPLACEMENT - LEFT SIDE

Removal Procedure

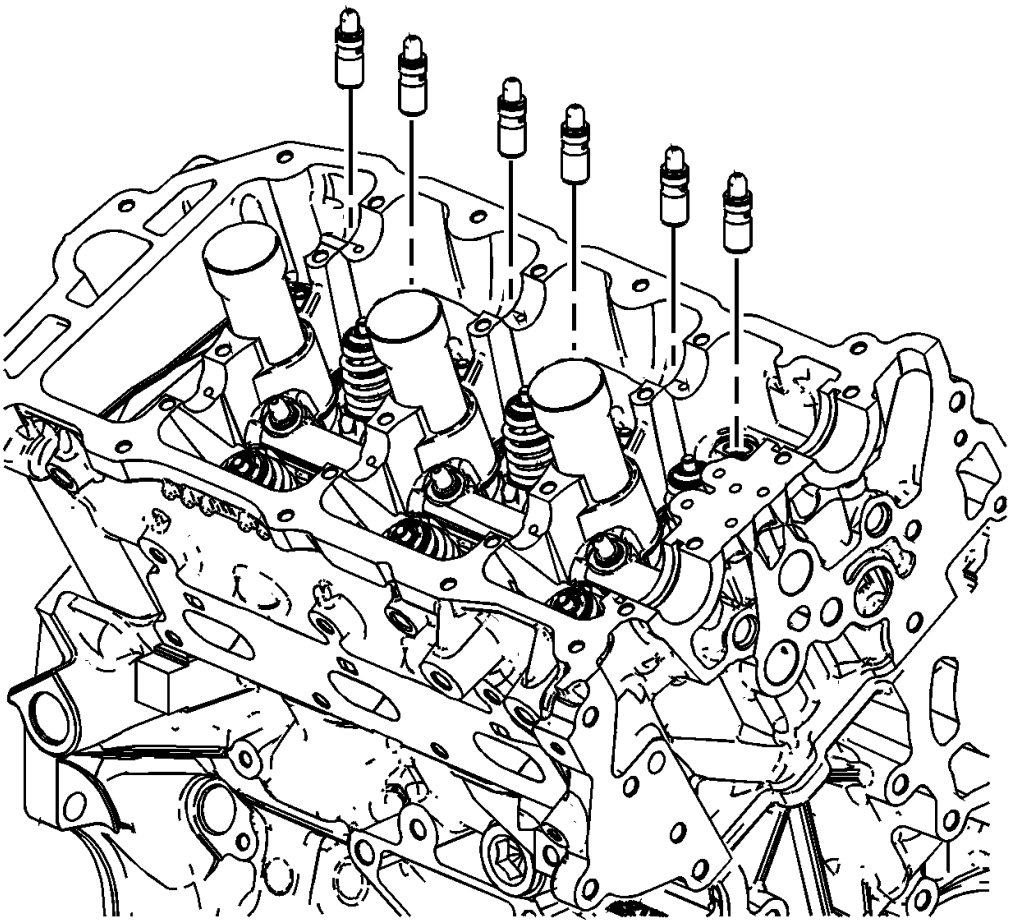

Fig. 204: Identifying Stationary Hydraulic Lash Adjuster (SHLA)
Courtesy of GENERAL MOTORS COMPANY

1. Remove the applicable camshafts. Refer to **Camshaft Replacement - Left Side**.
2. Remove the rocker arms. Refer to **Valve Rocker Arm Replacement - Left Side**.
3. Remove the lifters. Refer to **Valve Lifter Removal - Left Side** .
4. Clean and inspect the camshafts, rocker arms and lifters. Repair or replace as necessary. Refer to **Camshaft Cleaning and Inspection** , , **Valve Rocker Arm Cleaning and Inspection** , and **Valve Lifter Cleaning and Inspection** .

Installation Procedure

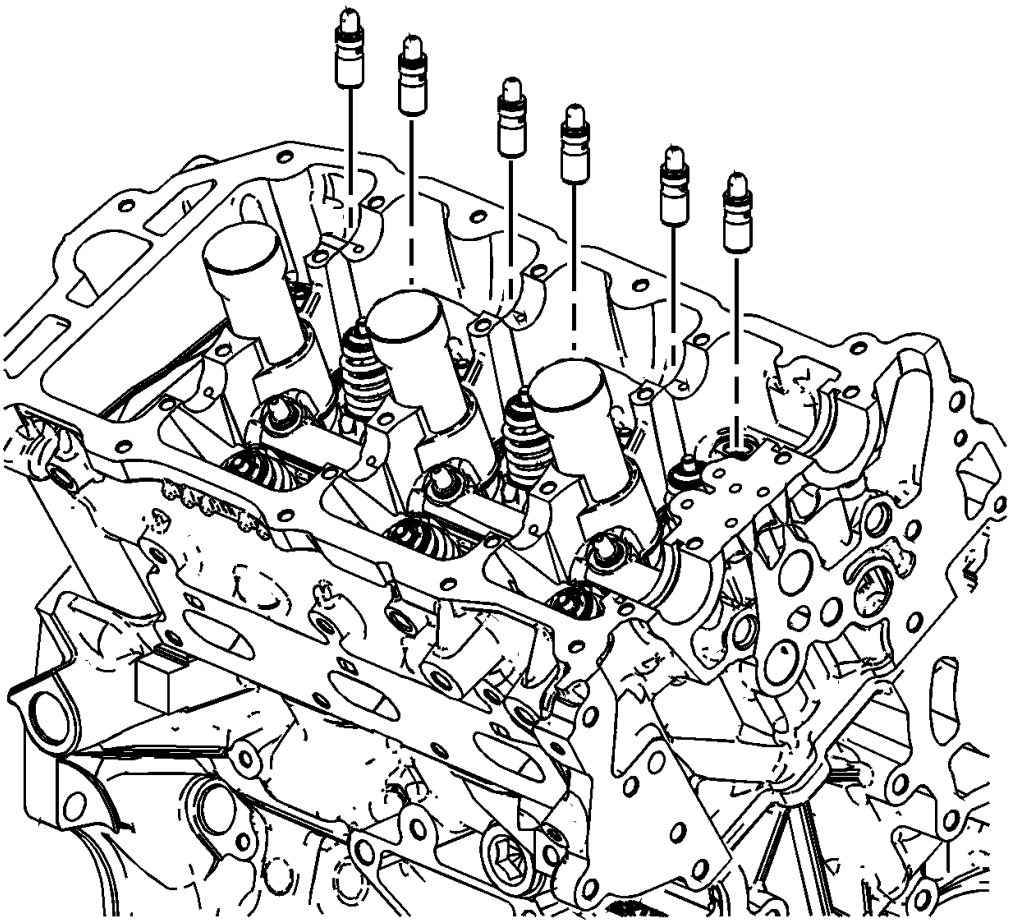

Fig. 205: Identifying Stationary Hydraulic Lash Adjuster (SHLA)
Courtesy of GENERAL MOTORS COMPANY

1. Install the lifters. Refer to **Valve Lifter Installation - Left Side** .
2. Install the rocker arms. Refer to **Valve Rocker Arm Replacement - Left Side**.
3. Install the applicable camshafts. Refer to **Camshaft Replacement - Left Side**.

VALVE LIFTER REPLACEMENT - RIGHT SIDE

Removal Procedure

1. Remove the applicable camshaft(s). Refer to **Camshaft Replacement - Right Side**.
2. Remove the rocker arms. Refer to **Valve Rocker Arm Removal - Right Side** .

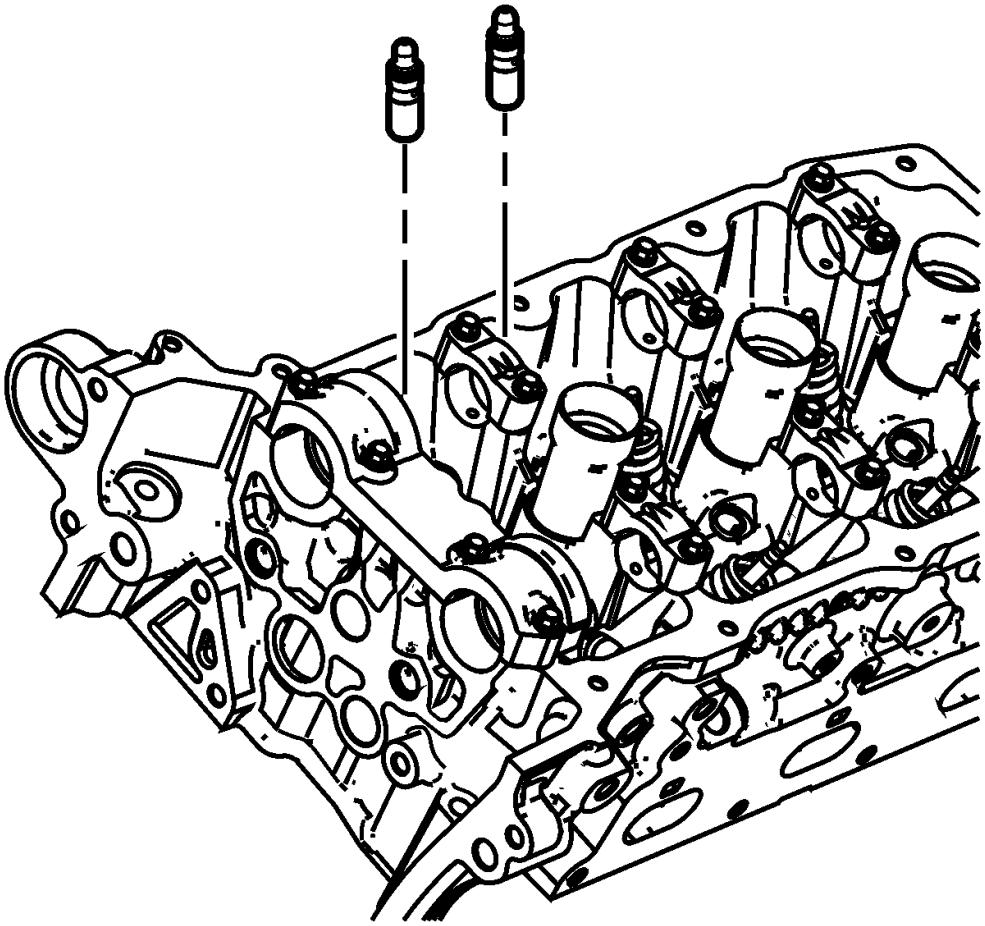

Fig. 206: View Of Stationary Hydraulic Lash Adjuster (SHLAs)
Courtesy of GENERAL MOTORS COMPANY

3. Remove the lifters. Refer to **Valve Lifter Removal - Right Side** .
4. Clean and inspect the camshaft(s) and the rocker arm(s) and lifters. Repair or replace as necessary. Refer to **Camshaft Cleaning and Inspection** , and **Valve Lifter Cleaning and Inspection** , and **Valve Rocker Arm Cleaning and Inspection** .

Installation Procedure

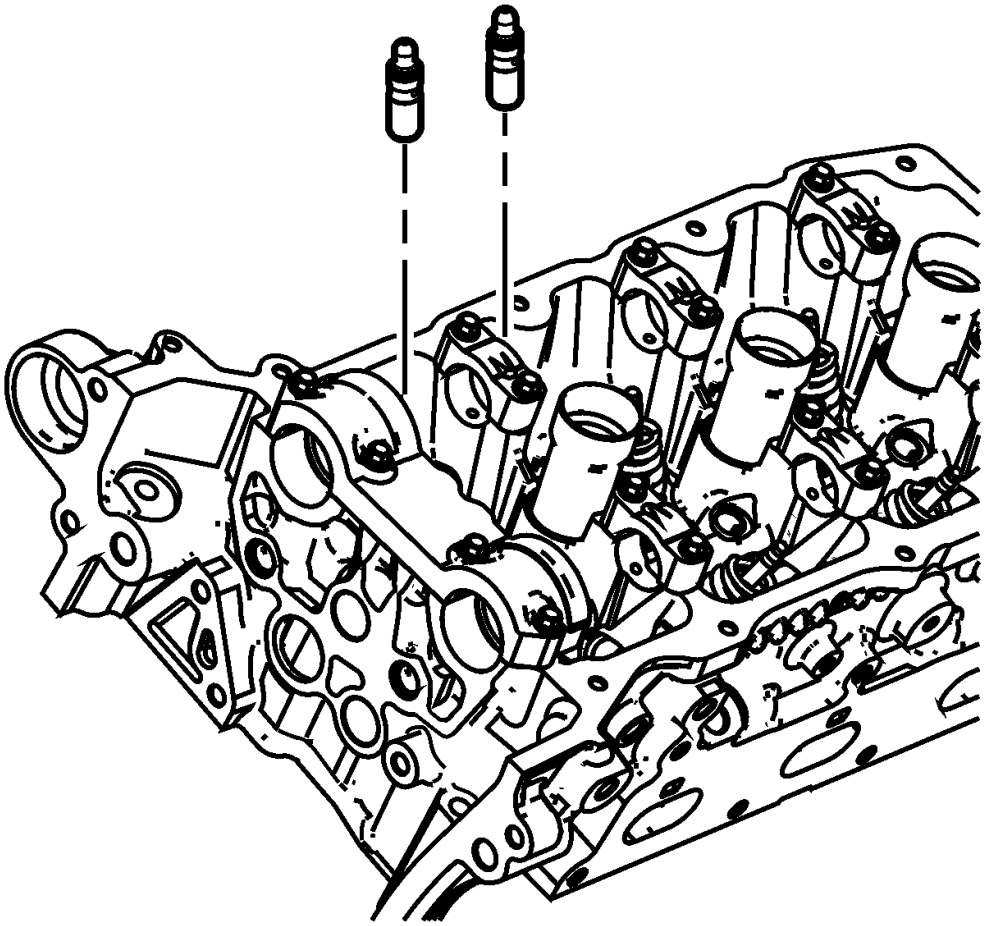

Fig. 207: View Of Stationary Hydraulic Lash Adjuster (SHLAs)
Courtesy of GENERAL MOTORS COMPANY

1. Install the lifters. Refer to **Valve Lifter Installation - Right Side** .
2. Install the rocker arms. Refer to **Valve Rocker Arm Installation - Right Side** .
3. Install the applicable camshaft(s). Refer to **Camshaft Replacement - Right Side**.

VALVE STEM OIL SEAL AND VALVE SPRING REPLACEMENT - LEFT SIDE

Special Tools

- **EN 46106** Flywheel Holding Tool
- **EN 46110** On-Vehicle Valve Spring Compressor
- **EN 46116** Valve Stem Seal Remover/Installer
- **EN-48313** Timing Chain Retention Tool
- **J 39313** Spark Plug Port Adapter

Removal Procedure

1. Remove the starter motor. Refer to **Starter Replacement (LFX)** .
2. Remove the camshafts and rocker arms. Refer to **Camshaft Replacement - Left Side**, and **Valve Rocker Arm Replacement - Left Side**.

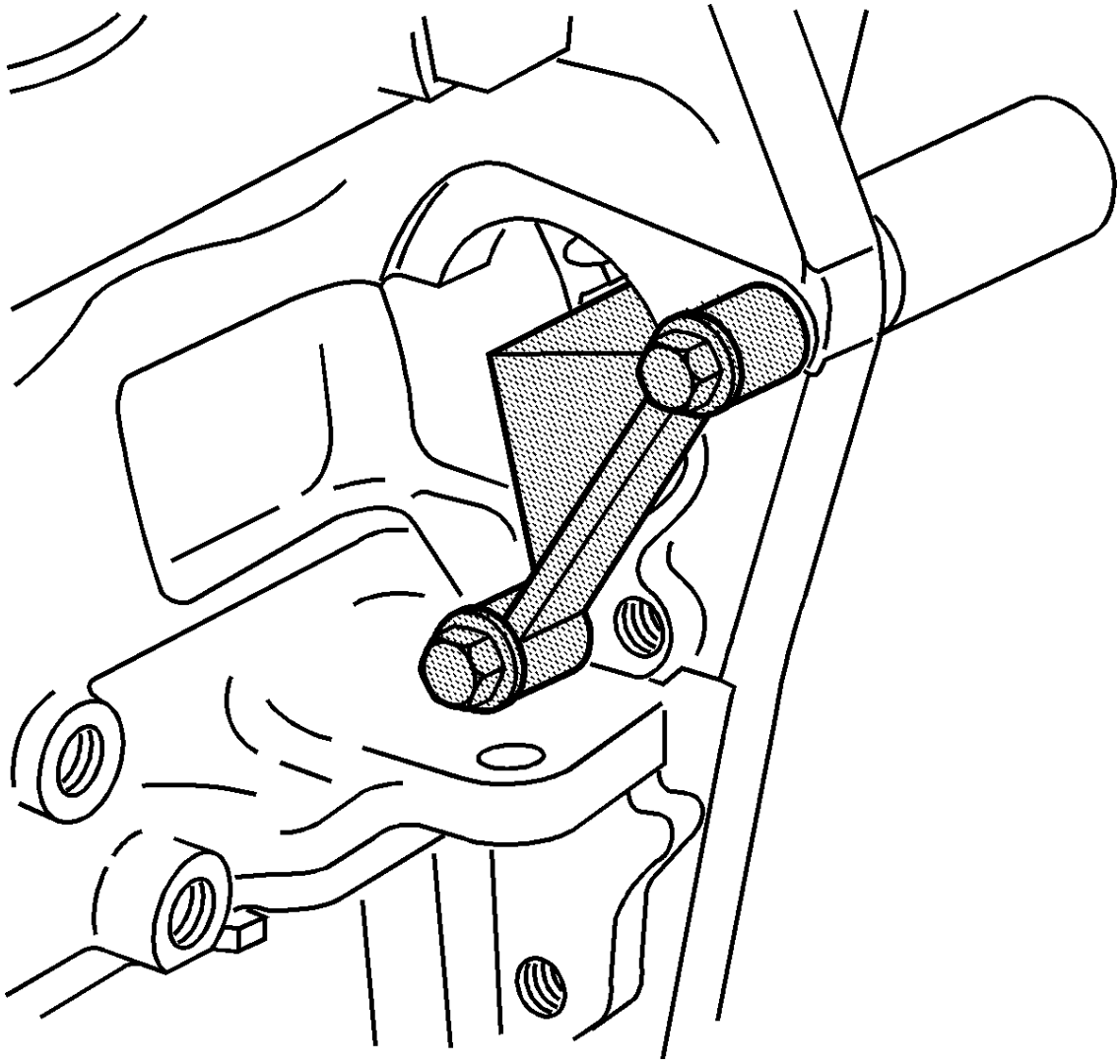

Fig. 208: Flywheel Holding Tool
Courtesy of GENERAL MOTORS COMPANY

NOTE: **If the EN 46106 Flywheel Holding Tool is not installed, the crankshaft may rotate. If the crankshaft rotates, disassembly and reassembly of the entire camshaft timing system may be required.**

3. Install the **EN 46106** Flywheel Holding Tool in order to prevent crankshaft rotation.
4. Remove the spark plug from the applicable cylinder. Refer to **Spark Plug Replacement** .
5. Install the **J 39313** Spark Plug Port Adapter to the applicable cylinder.

6. Connect the **J 39313** Spark Plug Port Adapter to a compressed air source.

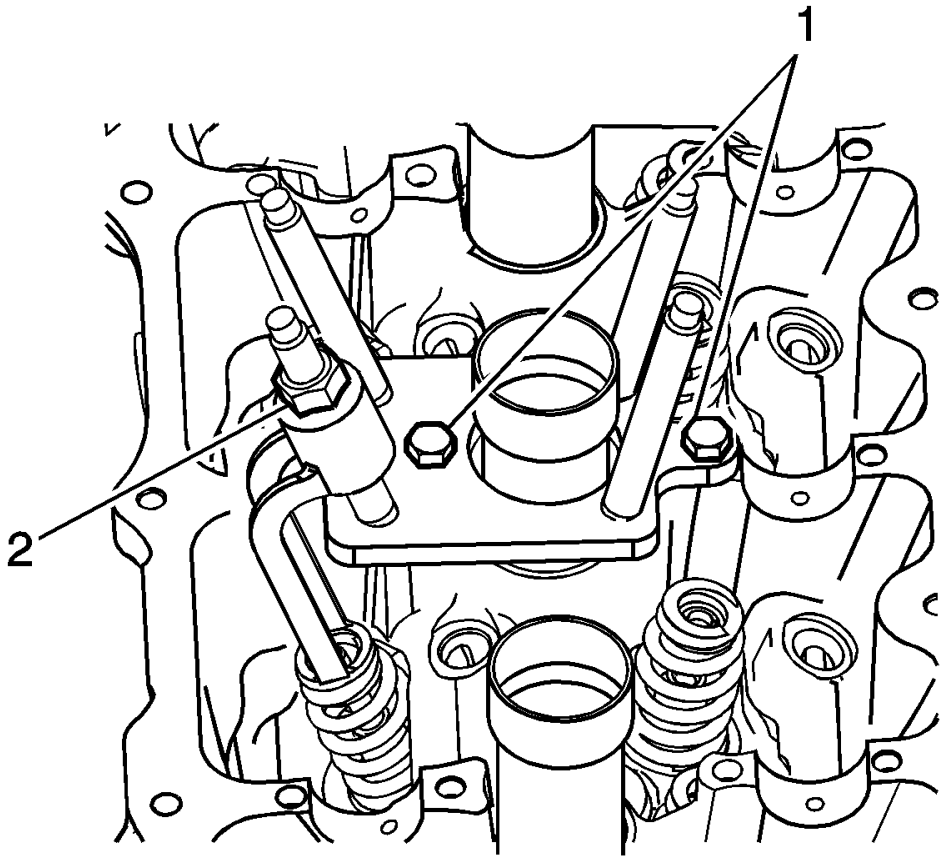

Fig. 209: View Of Installed Valve Spring Compressor Tool
Courtesy of GENERAL MOTORS COMPANY

7. Install the **EN 46110** On-Vehicle Valve Spring Compressor above the applicable cylinder as shown.
8. Tighten the **EN 46110** On-Vehicle Valve Spring Compressor nut (2).

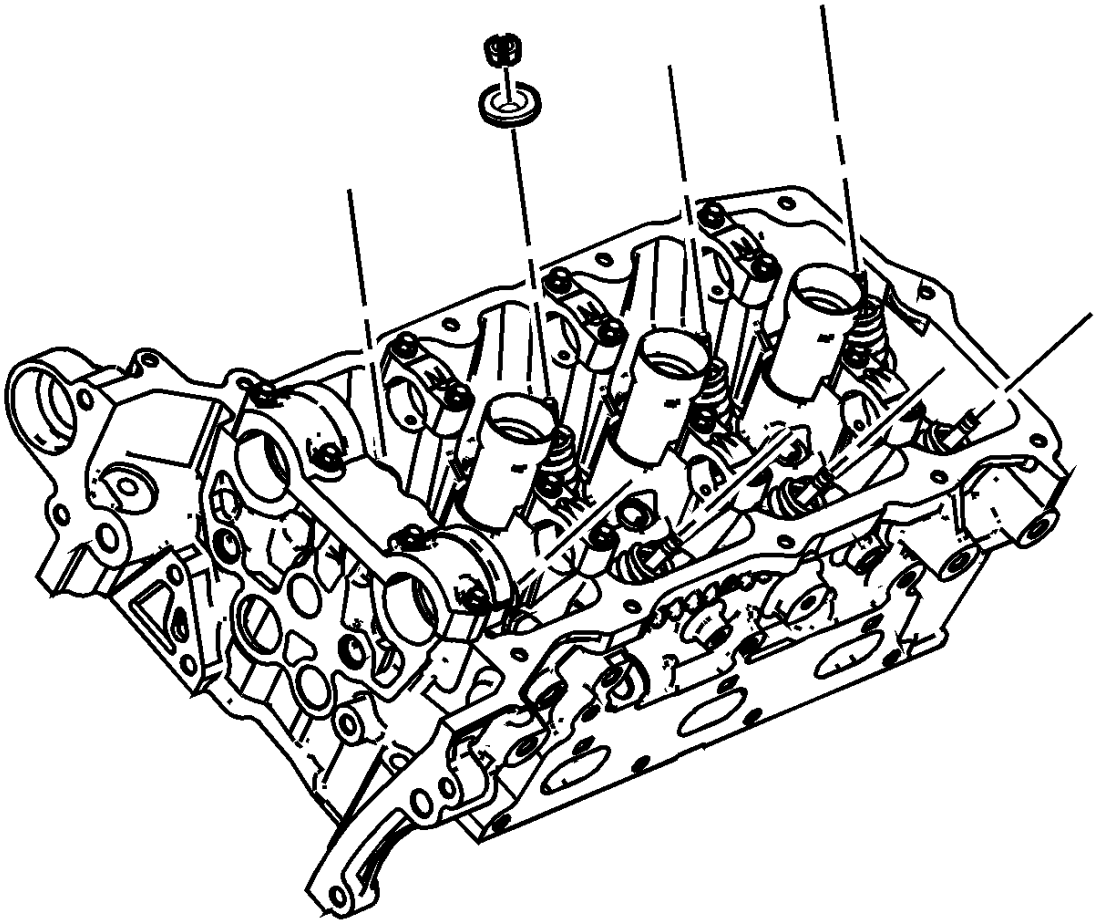

Fig. 210: View Of Valve Spring Keepers
Courtesy of GENERAL MOTORS COMPANY

9. Remove the valve keepers.
10. Loosen the **EN 46110** On-Vehicle Valve Spring Compressor nut.
11. Remove the valve spring retainer.

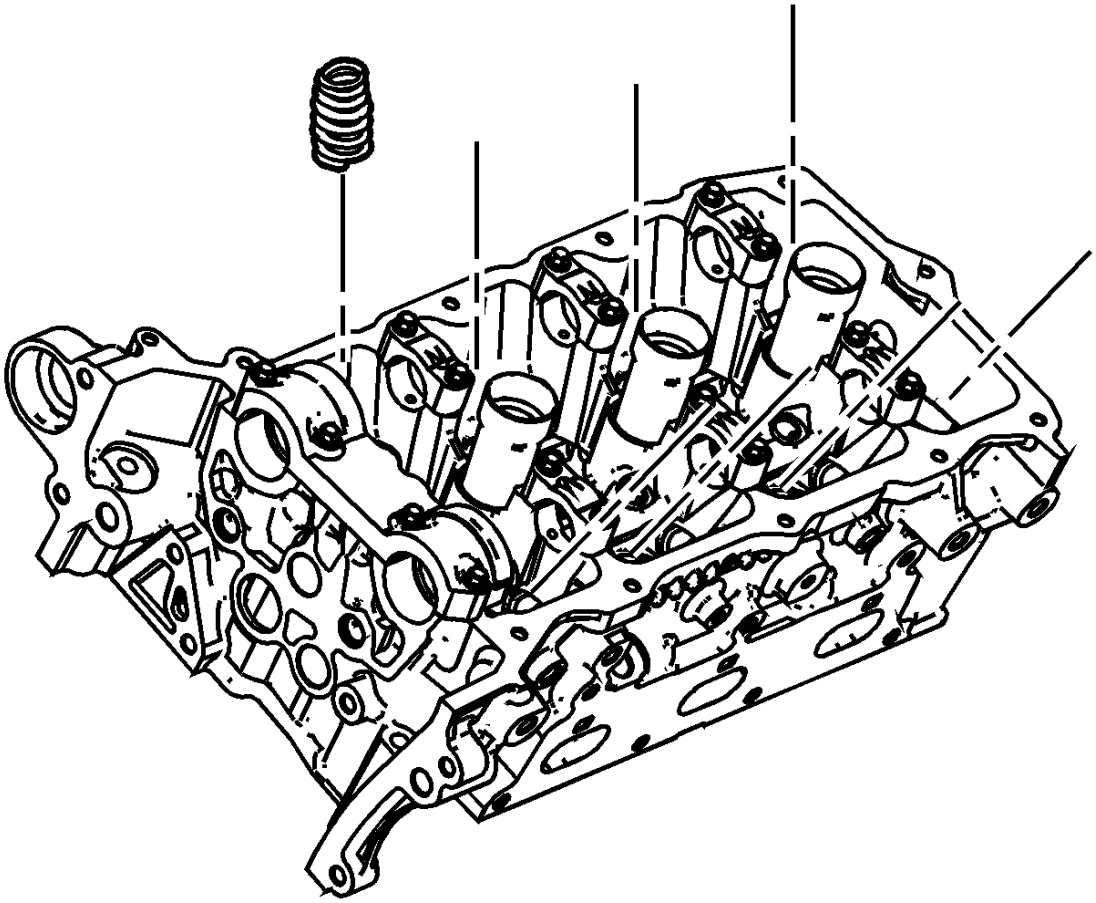

Fig. 211: View Of Valve Spring
Courtesy of GENERAL MOTORS COMPANY

12. Remove the valve spring.

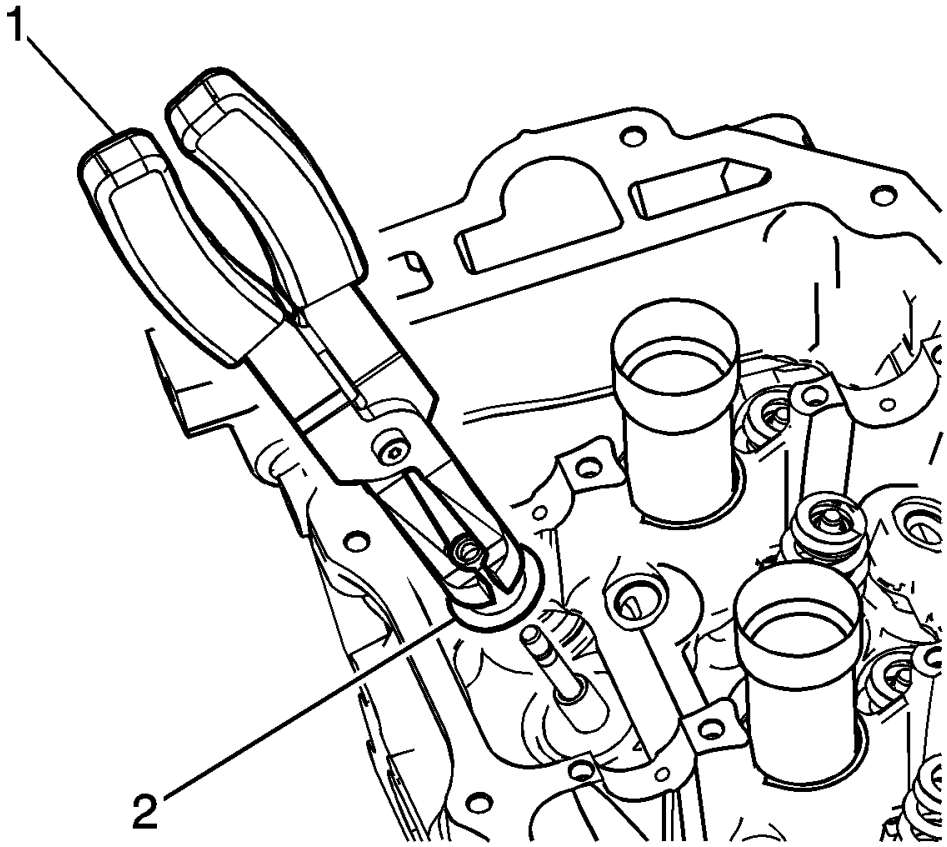

Fig. 212: Removing/Installing Valve Stem Seal
Courtesy of GENERAL MOTORS COMPANY

13. Use the **EN 46116** Valve Stem Seal Remover/Installer (1) in order to remove the valve stem seal (2).

Installation Procedure

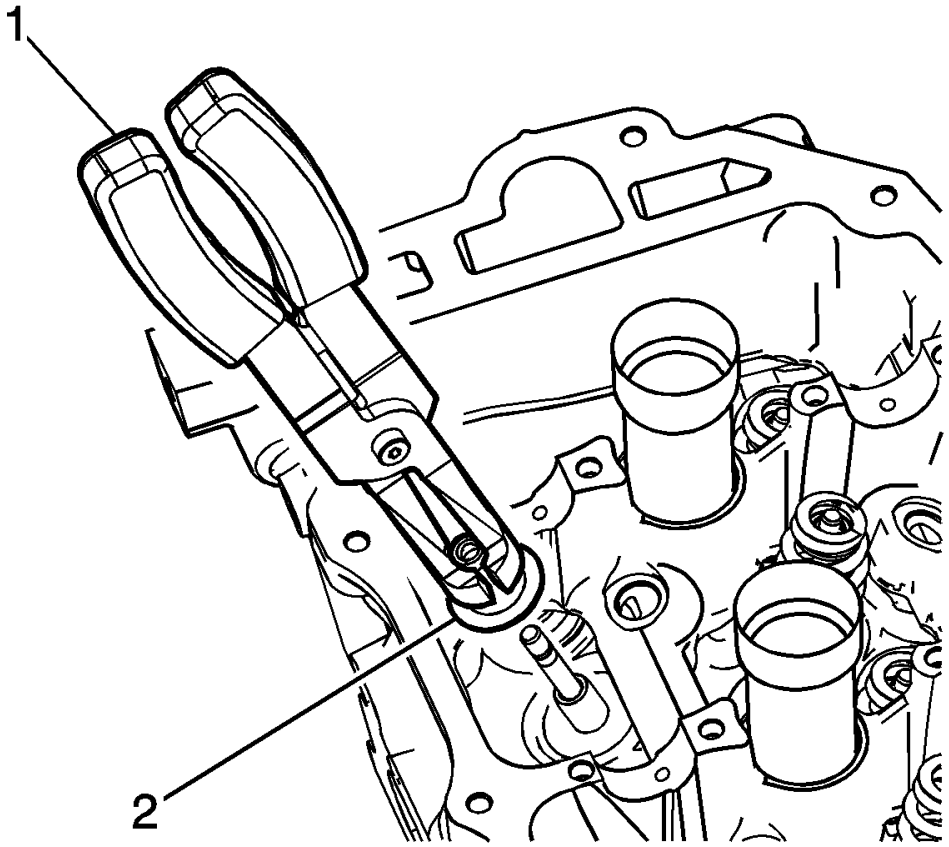

Fig. 213: Removing/Installing Valve Stem Seal
Courtesy of GENERAL MOTORS COMPANY

1. Use the **EN 46116** Valve Stem Seal Remover/Installer (1) in order to install the valve stem seal (2).

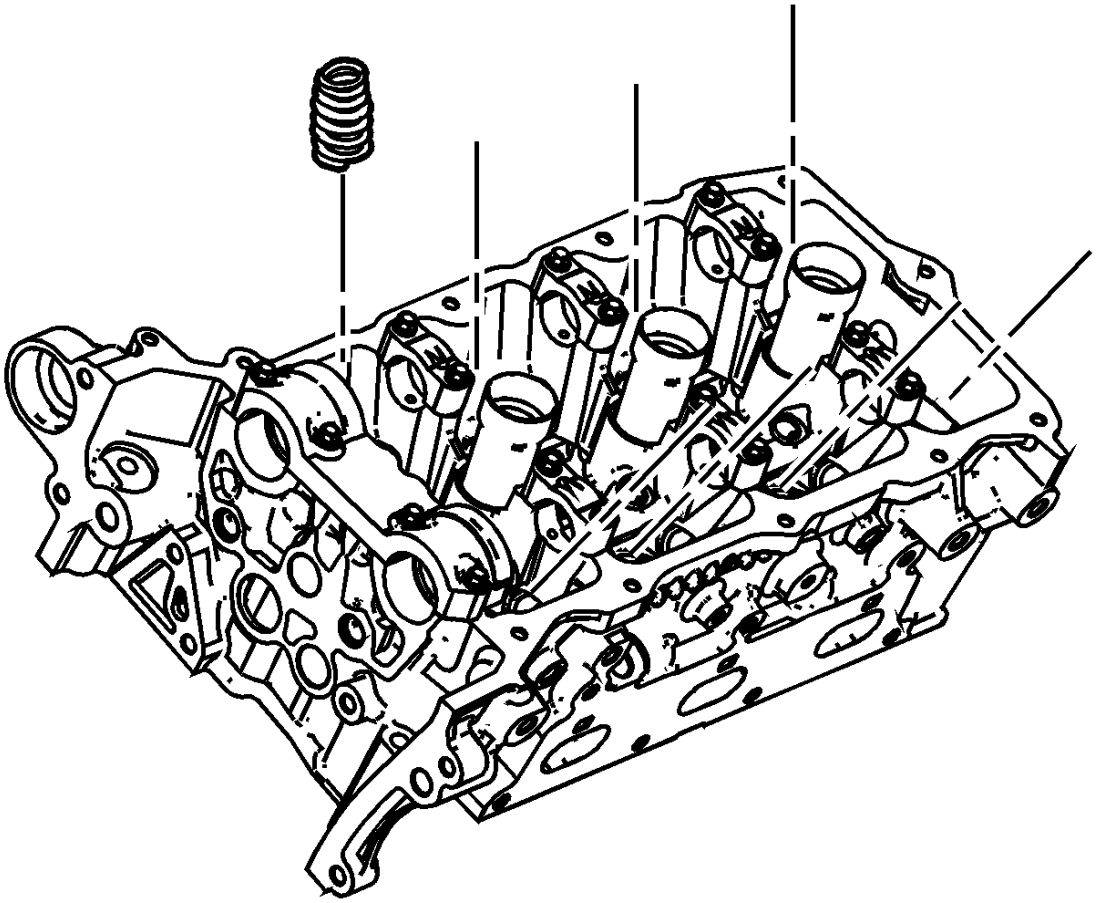

Fig. 214: View Of Valve Spring
Courtesy of GENERAL MOTORS COMPANY

2. Install the valve spring.
3. Install the valve spring retainer.

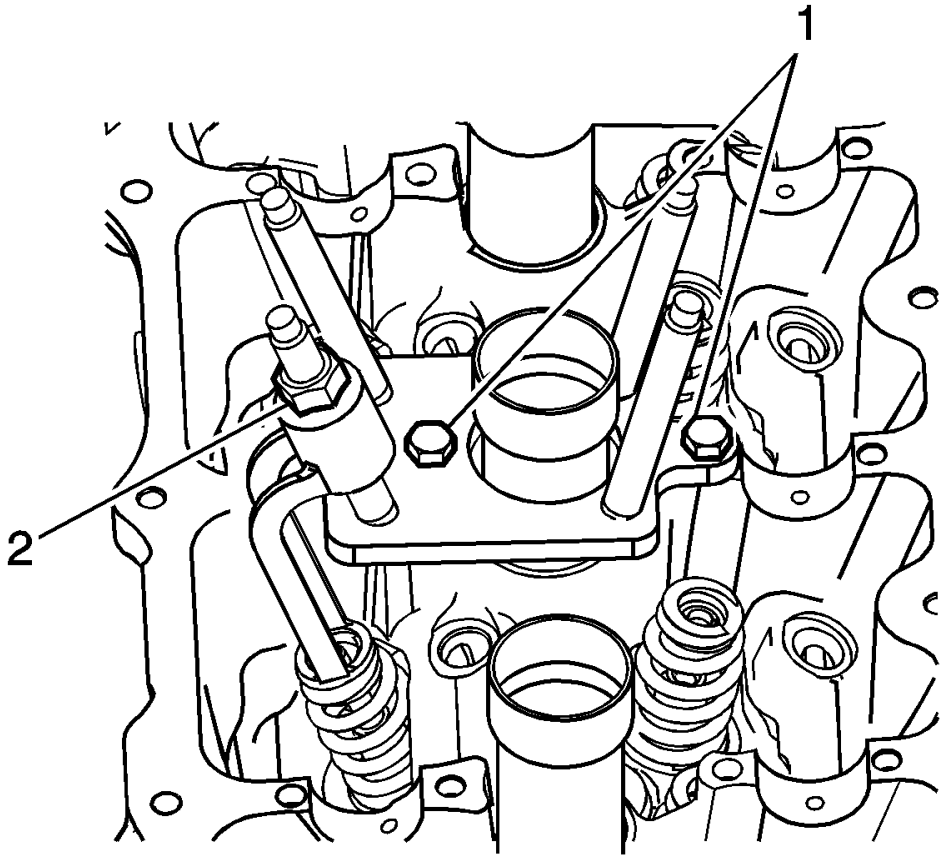

Fig. 215: View Of Installed Valve Spring Compressor Tool
Courtesy of GENERAL MOTORS COMPANY

4. Install the **EN 46110** On-Vehicle Valve Spring Compressor above the applicable valve spring as shown.

   Tighten the **EN 46110** On-Vehicle Valve Spring Compressor nut (2).

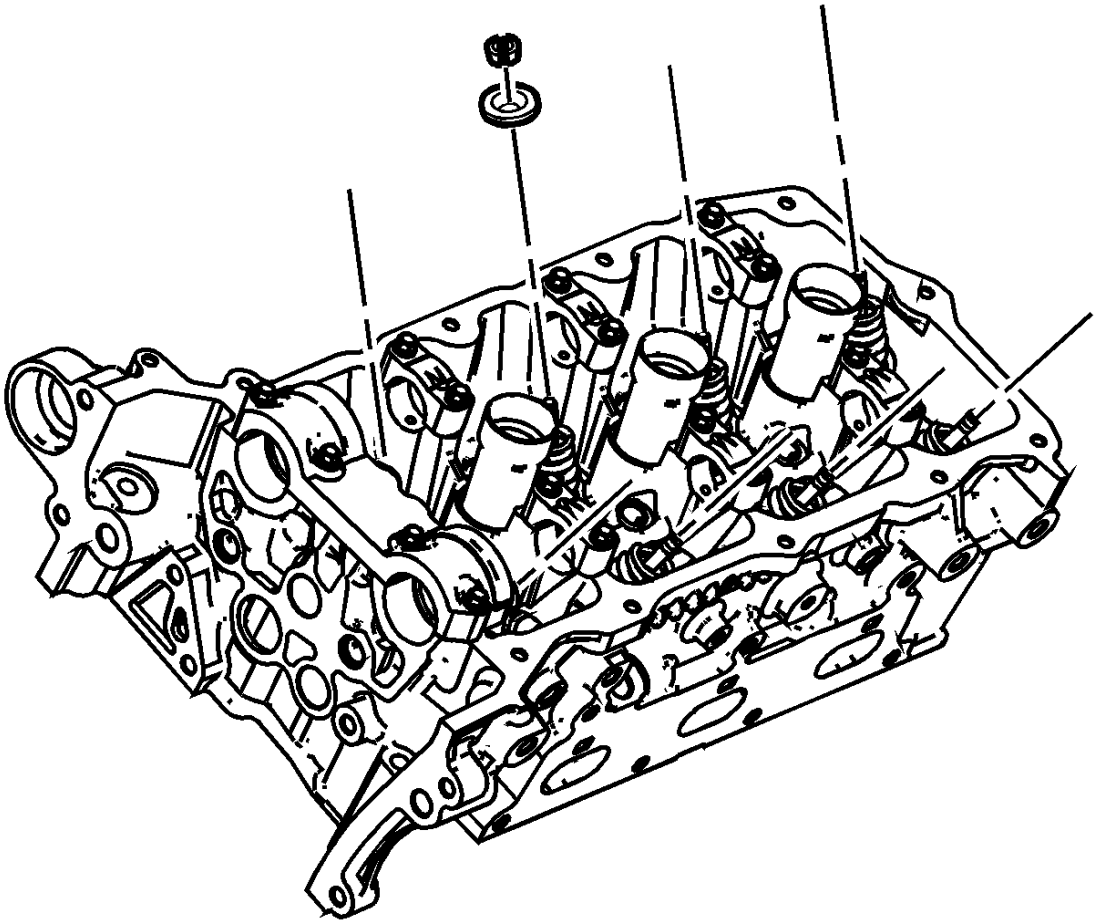

Fig. 216: View Of Valve Spring Keepers
Courtesy of GENERAL MOTORS COMPANY

5. Install the valve spring keepers.
6. Remove the **EN 46110** On-Vehicle Valve Spring Compressor.
7. Disconnect the **J 39313** Spark Plug Port Adapter from the compressed air source.
8. Remove the **J 39313** Spark Plug Port Adapter.
9. Install the spark plugs. Refer to **Spark Plug Replacement** .
10. Install the rocker arms and camshafts. Refer to **Valve Rocker Arm Replacement - Left Side**, and **Camshaft Replacement - Left Side**.
11. Remove the **EN 46106** Flywheel Holding Tool.
12. Install the starter motor. Refer to **Starter Replacement (LFX)** .

VALVE STEM OIL SEAL AND VALVE SPRING REPLACEMENT - RIGHT SIDE

Special Tools

- **EN 46106** Flywheel Holding Tool
- **EN 46110** On-Vehicle Valve Spring Compressor
- **EN 46116** Valve Stem Seal Remover/Installer
- **EN-48313** Timing Chain Retention Tool
- **J 39313** Spark Plug Port Adapter

Removal Procedure

1. Remove the starter motor. Refer to **Starter Replacement (LFX)** .
2. Remove the camshafts and rocker arms. Refer to **Camshaft Replacement - Right Side**, and **Valve Rocker Arm Replacement - Right Side**.

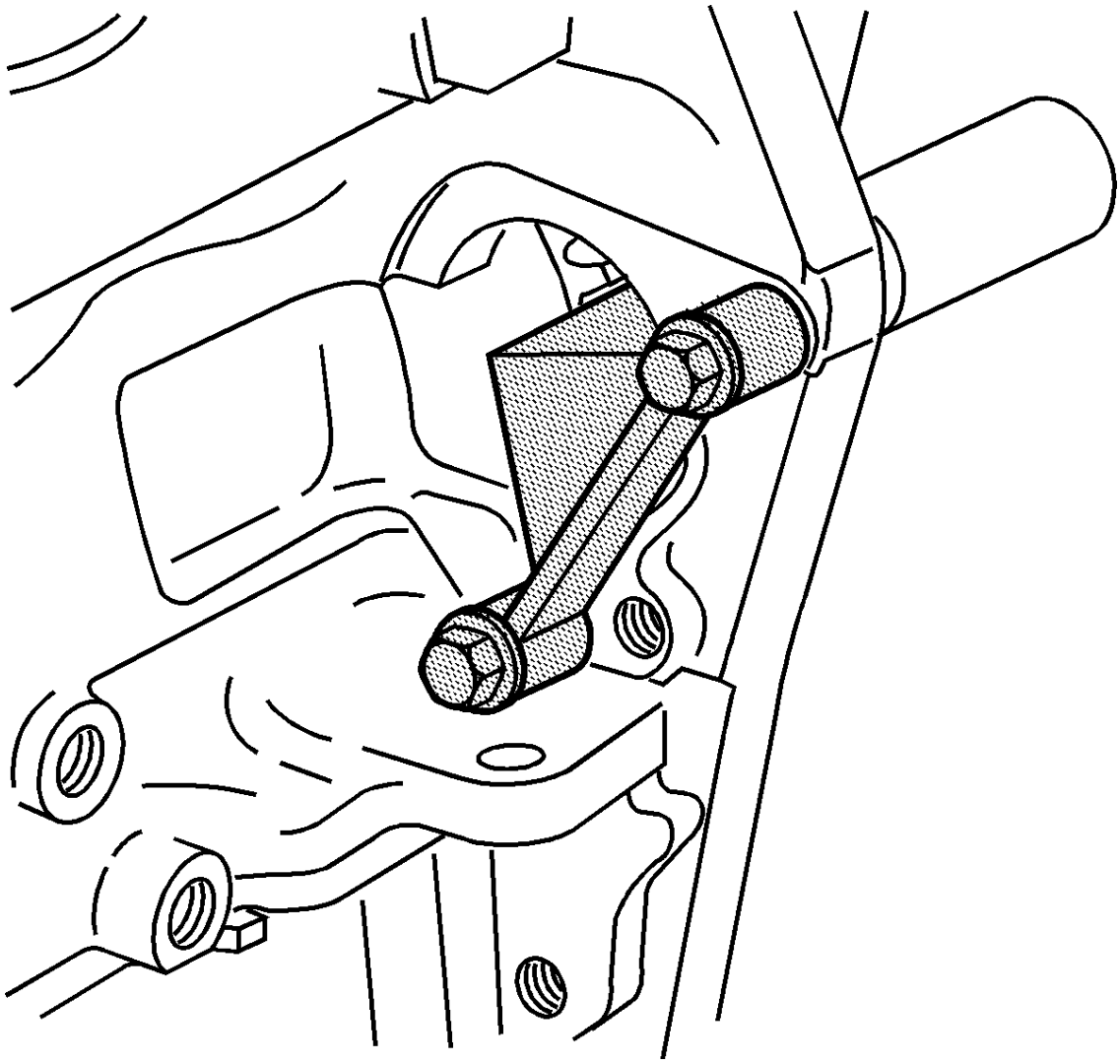

Fig. 217: Flywheel Holding Tool
Courtesy of GENERAL MOTORS COMPANY

NOTE: If the EN 46106 Flywheel Holding Tool is not installed, the crankshaft may

rotate. If the crankshaft rotates, disassembly and reassembly of the entire camshaft timing system may be required.

3. Install the **EN 46106** Flywheel Holding Tool in order to prevent crankshaft rotation.
4. Remove the spark plug from the applicable cylinder. Refer to **Spark Plug Replacement** .
5. Install the **J 39313** Spark Plug Port Adapter to the applicable cylinder.
6. Connect the **J 39313** Spark Plug Port Adapter to a compressed air source.

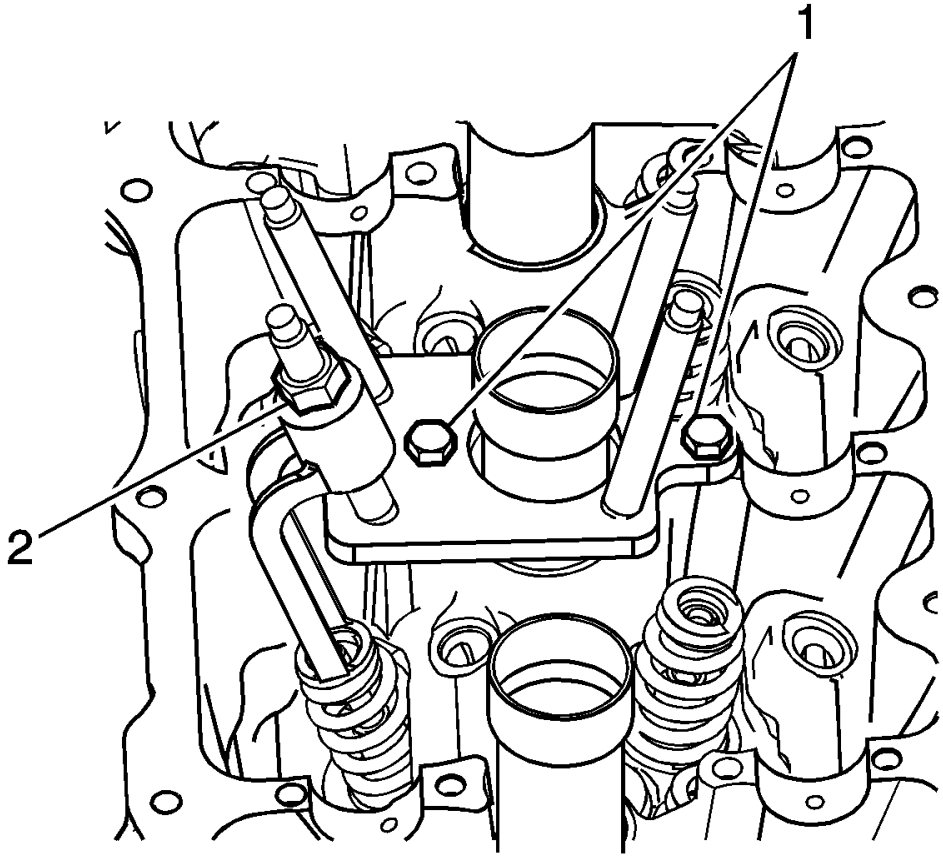

Fig. 218: View Of Installed Valve Spring Compressor Tool
Courtesy of GENERAL MOTORS COMPANY

7. Install the **EN 46110** On-Vehicle Valve Spring Compressor above the applicable cylinder as shown.
8. Tighten the **EN 46110** On-Vehicle Valve Spring Compressor nut (2).

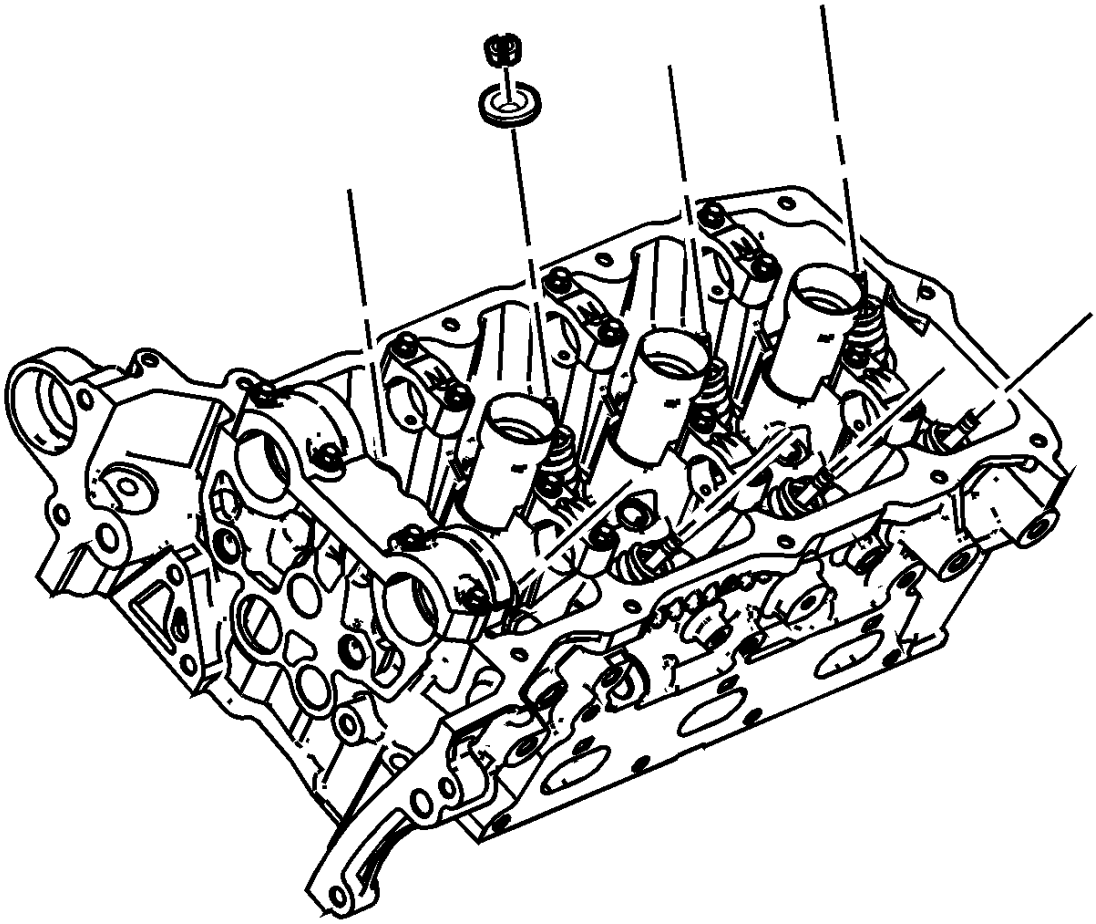

Fig. 219: View Of Valve Spring Keepers
Courtesy of GENERAL MOTORS COMPANY

9. Remove the valve keepers.
10. Loosen the **EN 46110** On-Vehicle Valve Spring Compressor nut.
11. Remove the valve spring retainer.

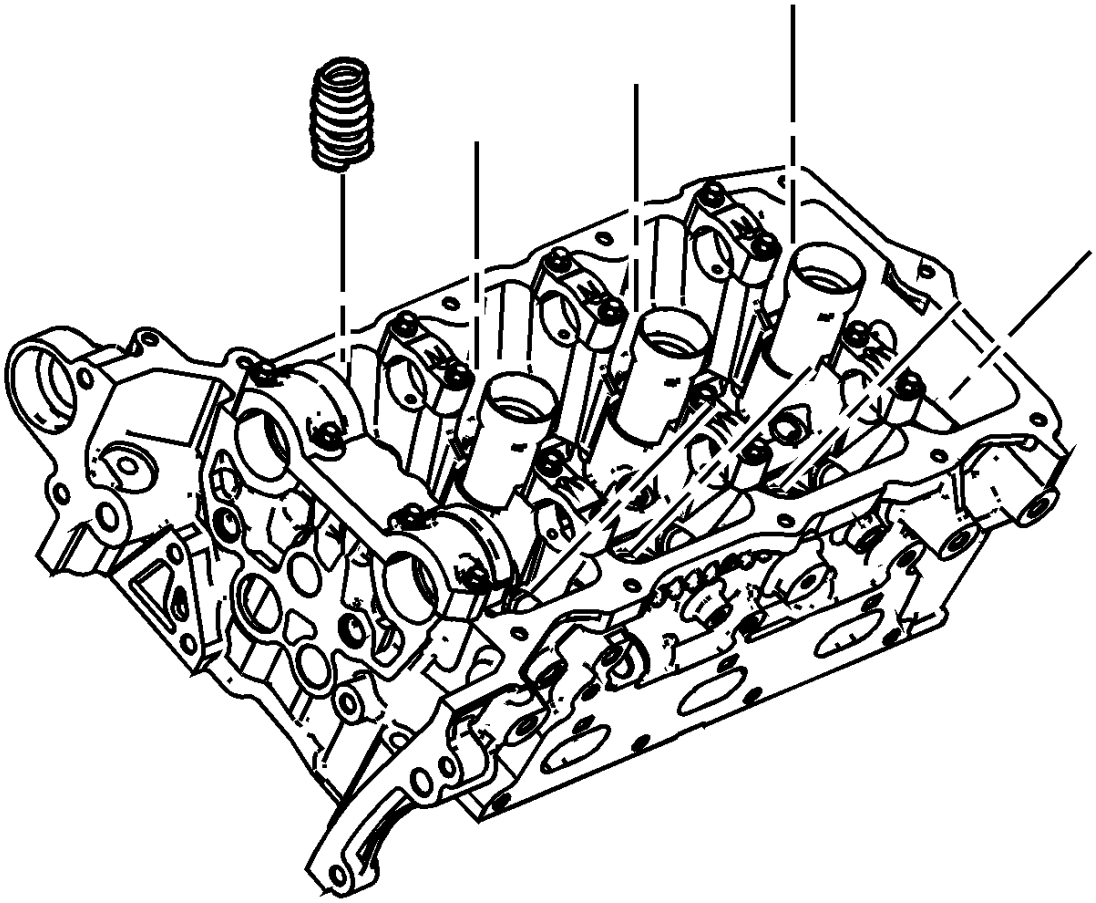

Fig. 220: View Of Valve Spring
Courtesy of GENERAL MOTORS COMPANY

12. Remove the valve springs.

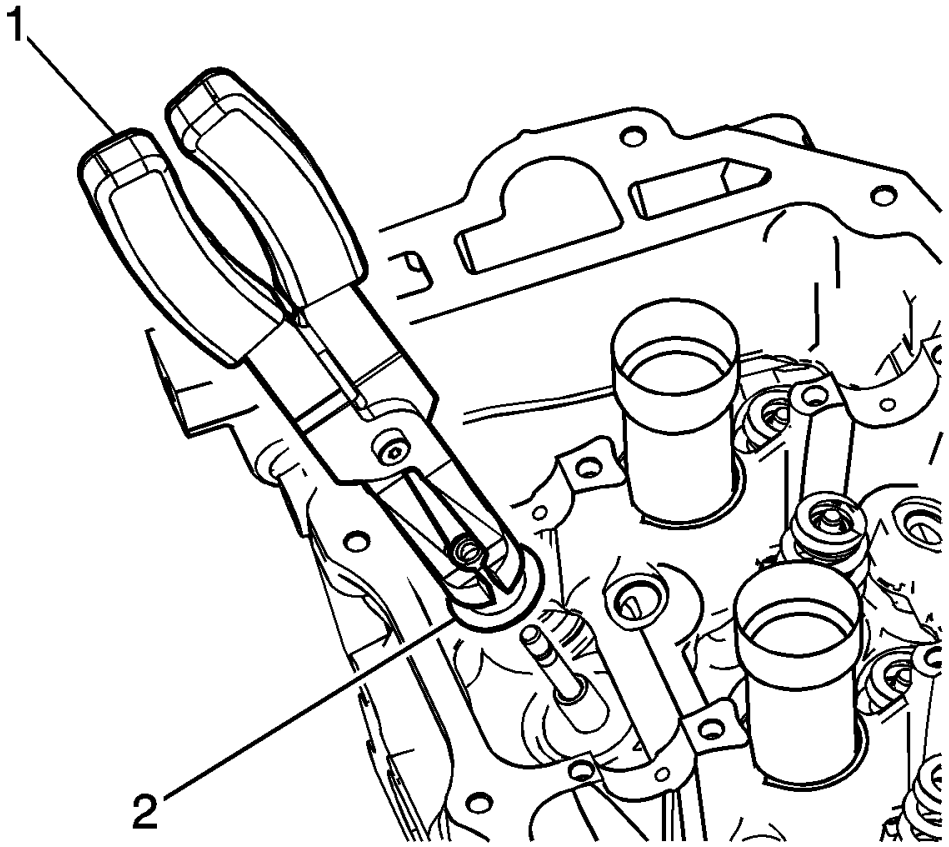

Fig. 221: Removing/Installing Valve Stem Seal
Courtesy of GENERAL MOTORS COMPANY

13. Use the **EN 46116** Valve Stem Seal Remover/Installer (1) in order to remove the valve stem seal (2).

Installation Procedure

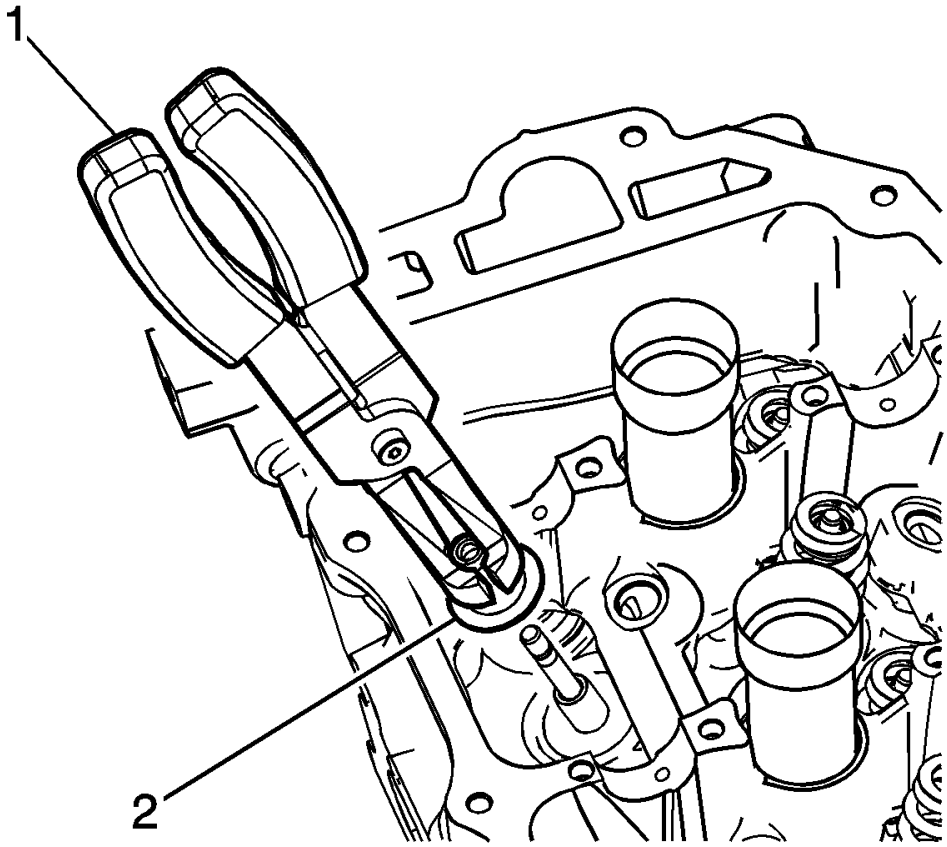

Fig. 222: Removing/Installing Valve Stem Seal
Courtesy of GENERAL MOTORS COMPANY

1. Use the **EN 46116** Valve Stem Seal Remover/Installer (1) in order to install the valve stem seals (2).

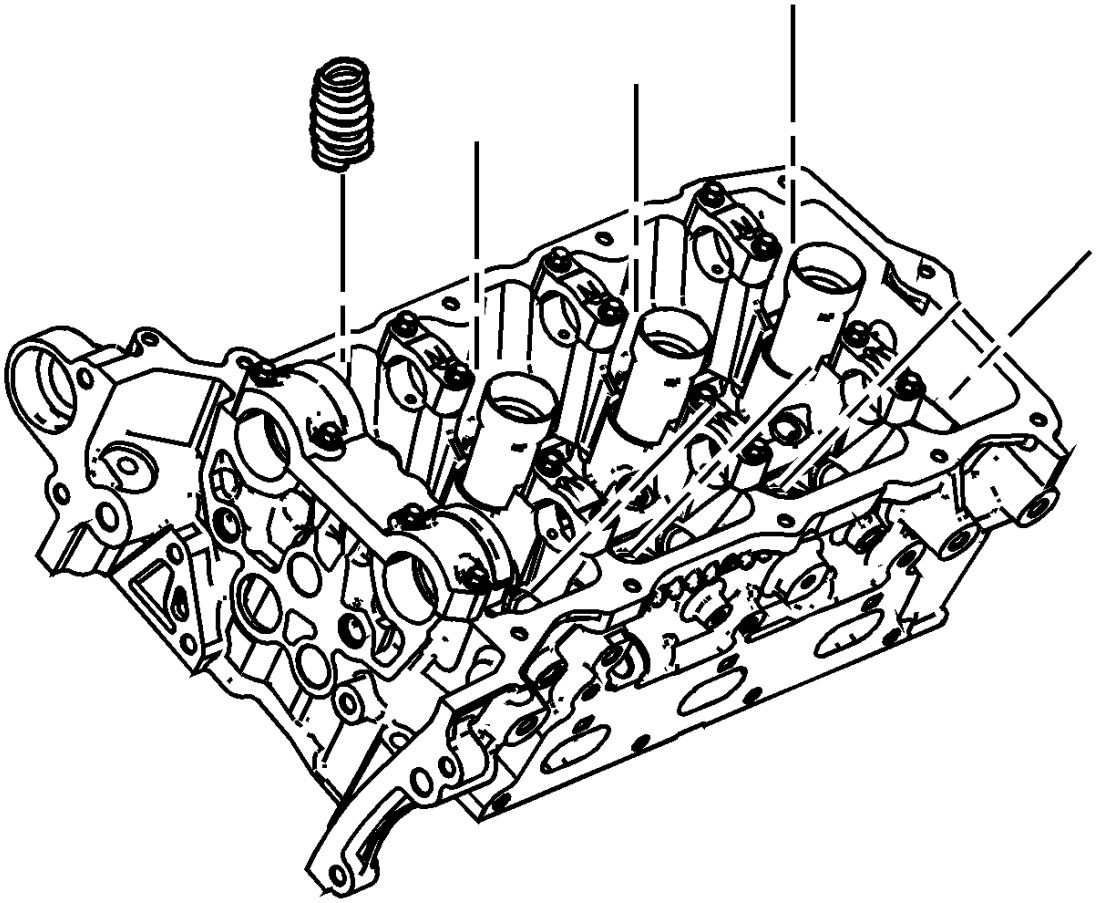

Fig. 223: View Of Valve Spring
Courtesy of GENERAL MOTORS COMPANY

2. Install the valve spring.
3. Install the valve spring retainer.

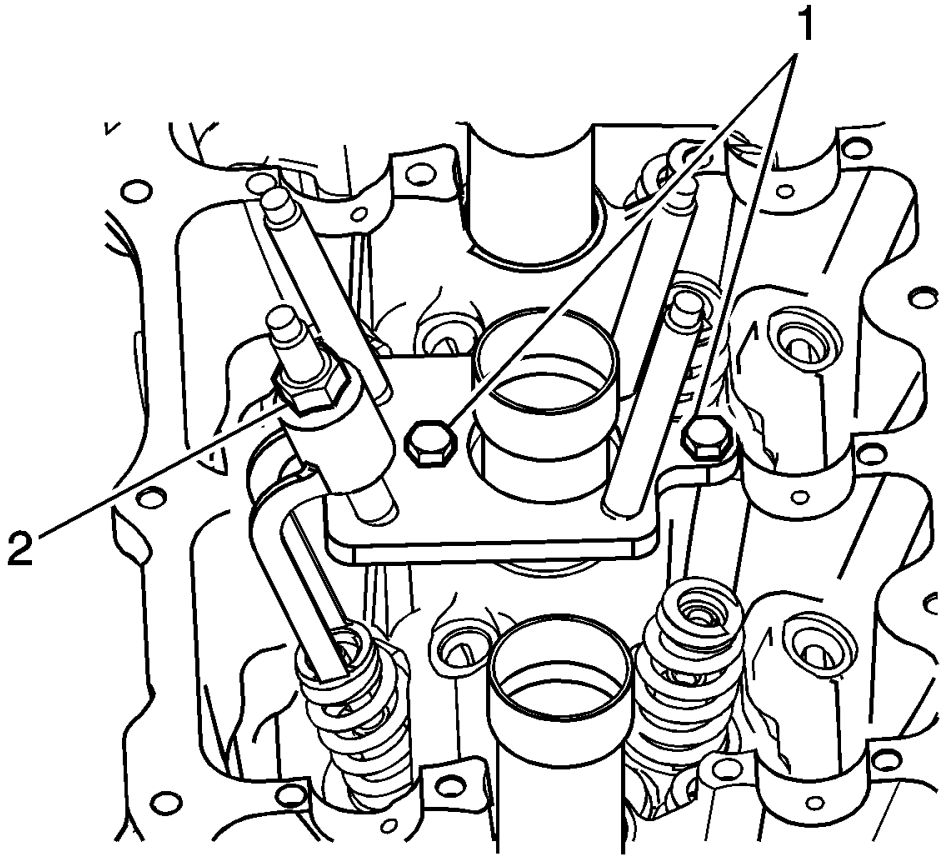

Fig. 224: View Of Installed Valve Spring Compressor Tool
Courtesy of GENERAL MOTORS COMPANY

4. Install the **EN 46110** On-Vehicle Valve Spring Compressor above the applicable valve spring as shown.

   Tighten the **EN 46110** On-Vehicle Valve Spring Compressor nut (2).

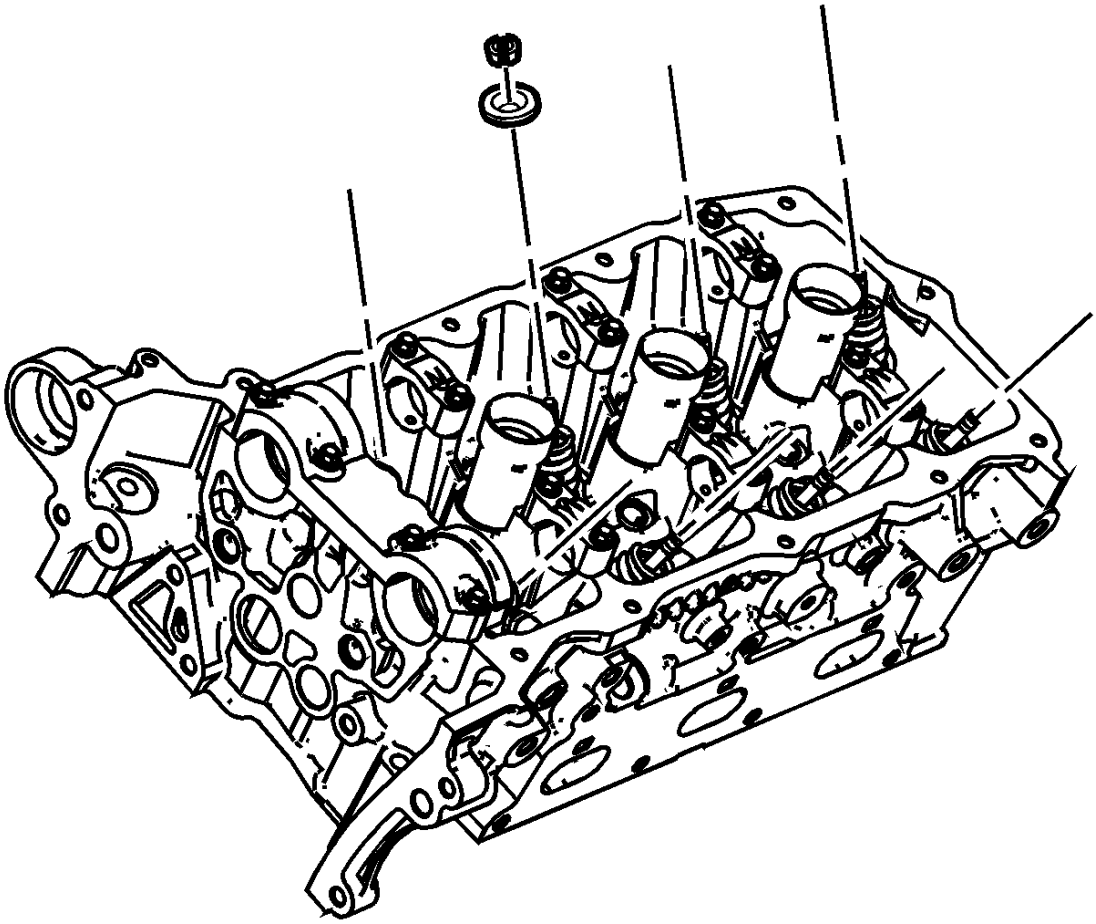

Fig. 225: View Of Valve Spring Keepers
Courtesy of GENERAL MOTORS COMPANY

5. Install the valve spring keepers.
6. Remove the **EN 46110** On-Vehicle Valve Spring Compressor.
7. Disconnect the **J 39313** Spark Plug Port Adapter from the compressed air source.
8. Remove the **J 39313** Spark Plug Port Adapter.
9. Install the spark plugs. Refer to **Spark Plug Replacement** .
10. Install the rocker arms and camshafts. Refer to **Valve Rocker Arm Replacement - Right Side**, and **Camshaft Replacement - Right Side**.
11. Remove the **EN 46106** Flywheel Holding Tool.
12. Install the starter motor. Refer to **Starter Replacement (LFX)** .

CYLINDER HEAD REPLACEMENT - LEFT SIDE (LFX)

Special Tools

EN-45059 Angle Meter

For equivalent regional tools, refer to **Special Tools** .

Removal Procedure

1. Remove the camshaft cover. Refer to **Camshaft Cover Replacement - Left Side**.
2. Remove the left bank secondary timing chain. Refer to **Secondary Camshaft Intermediate Drive Chain Replacement - Left Side**.
3. Remove the fuel pump. Refer to **Fuel Pump Replacement** .
4. Remove the oil filter adaptor. Refer to **Oil Filter Adapter Replacement**.
5. Remove the catalytic converter. Refer to **Catalytic Converter Replacement - Left Side (LFX)** .
6. Remove the oil level indicator tube. Refer to **Oil Level Indicator Tube Replacement**.
7. Remove the ground wire bolt and wire from the cylinder head.

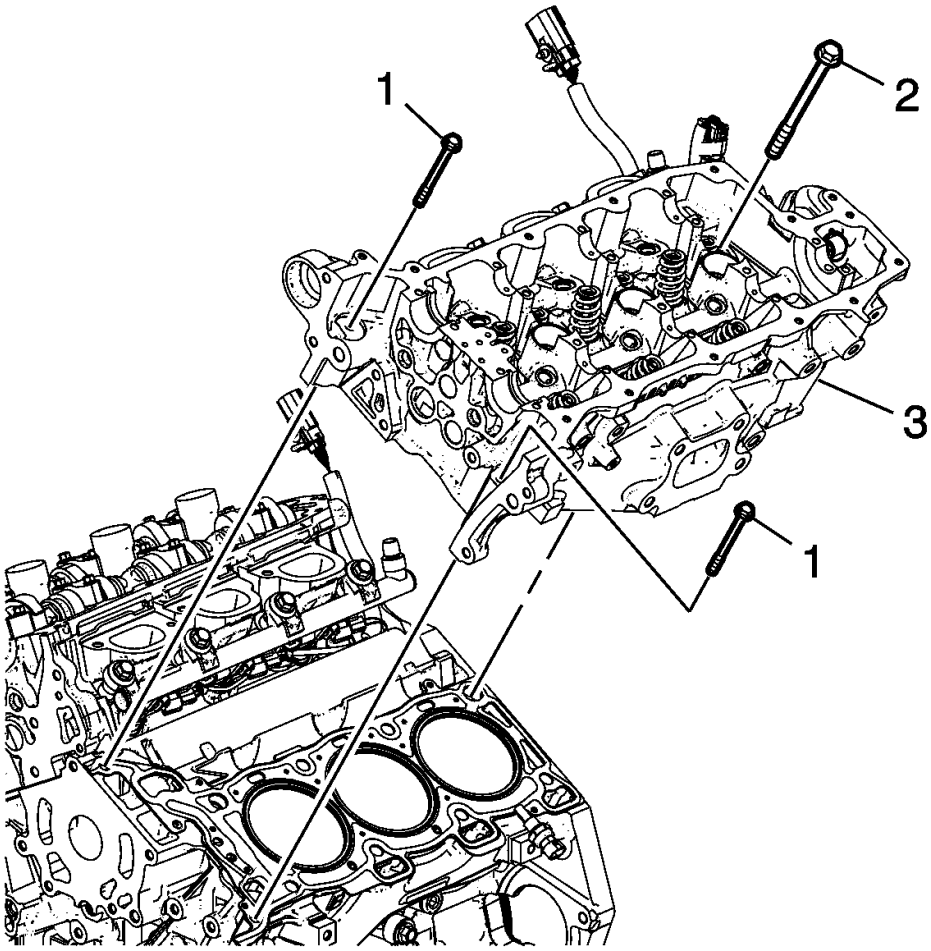

Fig. 226: View Of Left Cylinder Head & Bolts
Courtesy of GENERAL MOTORS COMPANY

8. Remove the 2 front M8 left cylinder head bolts (1).
9. Remove the left cylinder head bolts (2).
10. Remove the left cylinder head (3).

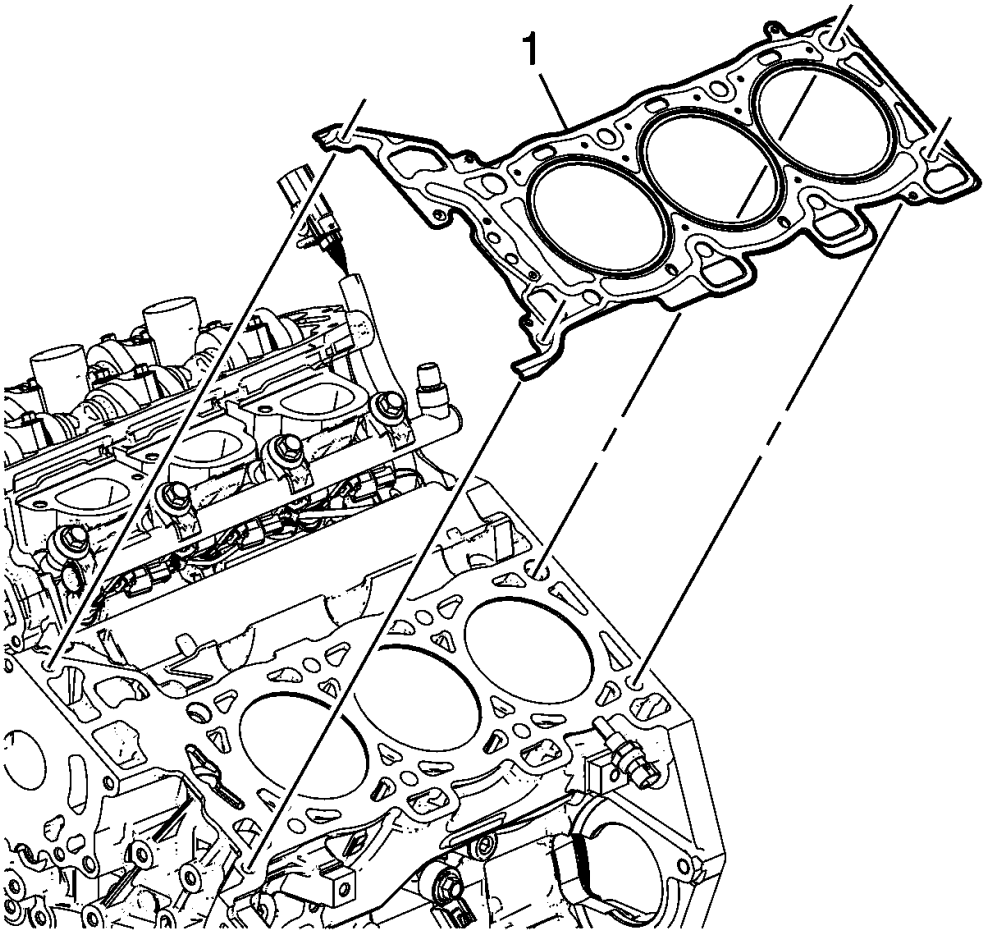

Fig. 227: View Of Left Cylinder Head Gasket
Courtesy of GENERAL MOTORS COMPANY

11. Remove and discard the left cylinder head gasket (1).
12. Clean and inspect the cylinder head and the engine block sealing surfaces. Refer to **Cylinder Head Cleaning and Inspection** , and **Engine Block Cleaning and Inspection** .
13. Disassemble the cylinder head if needed. Refer to **Cylinder Head Disassemble (LFX)** .

Installation Procedure

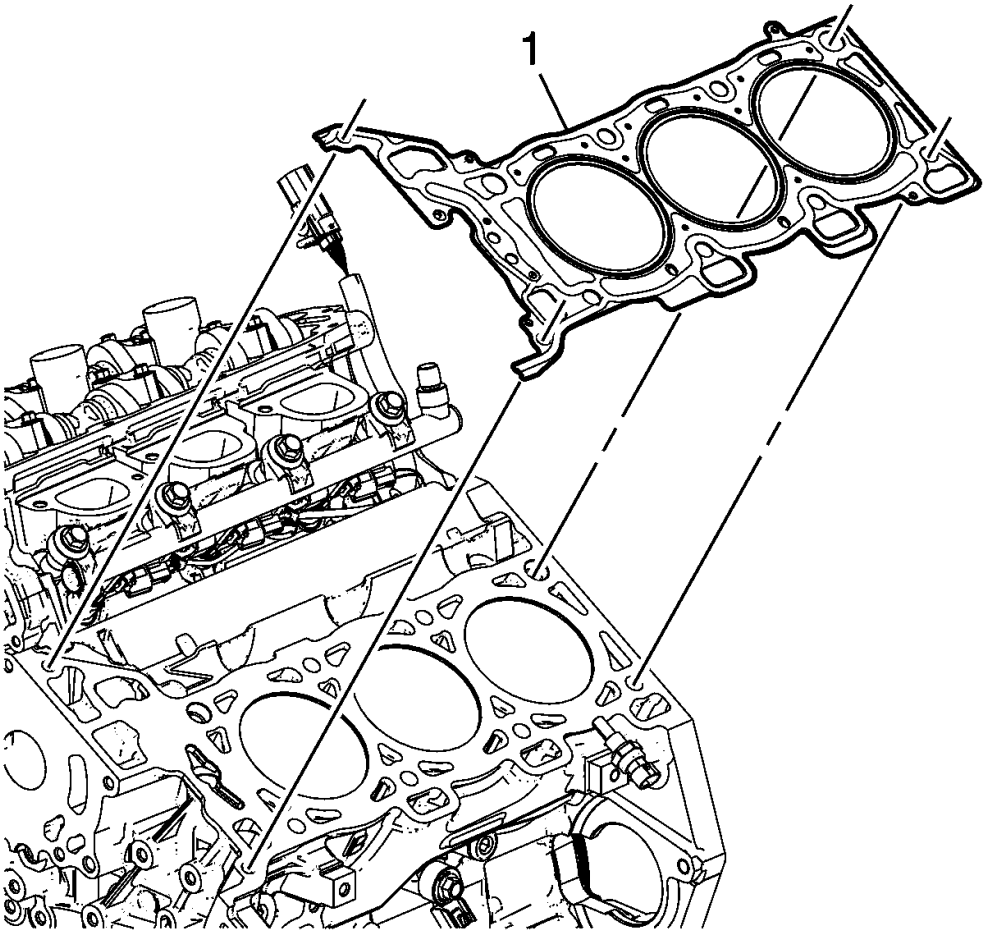

Fig. 228: View Of Left Cylinder Head Gasket
Courtesy of GENERAL MOTORS COMPANY

1. Ensure the cylinder head locating pins are securely mounted in the cylinder block deck face.
2. Install a NEW left cylinder head gasket (1) using the deck face locating pins for retention.

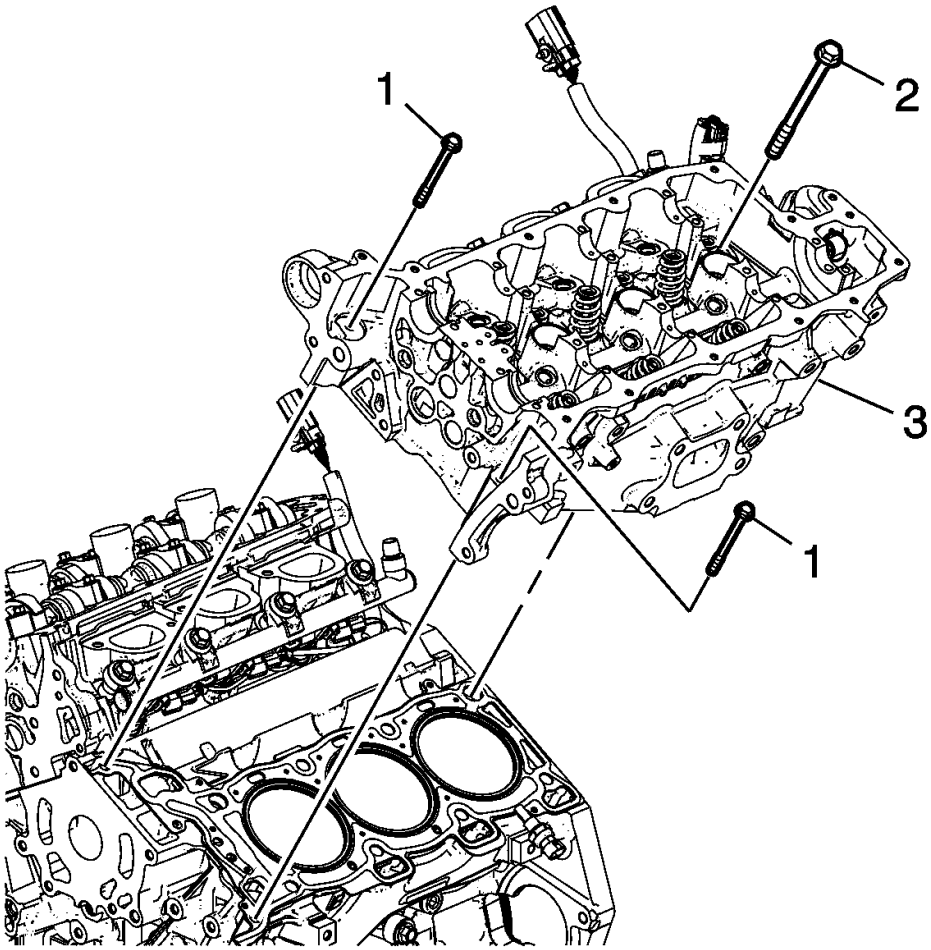

Fig. 229: View Of Left Cylinder Head & Bolts
Courtesy of GENERAL MOTORS COMPANY

3. Align the left cylinder head (3) with the deck face locating pins.
4. Place the left cylinder head in position on the deck face.

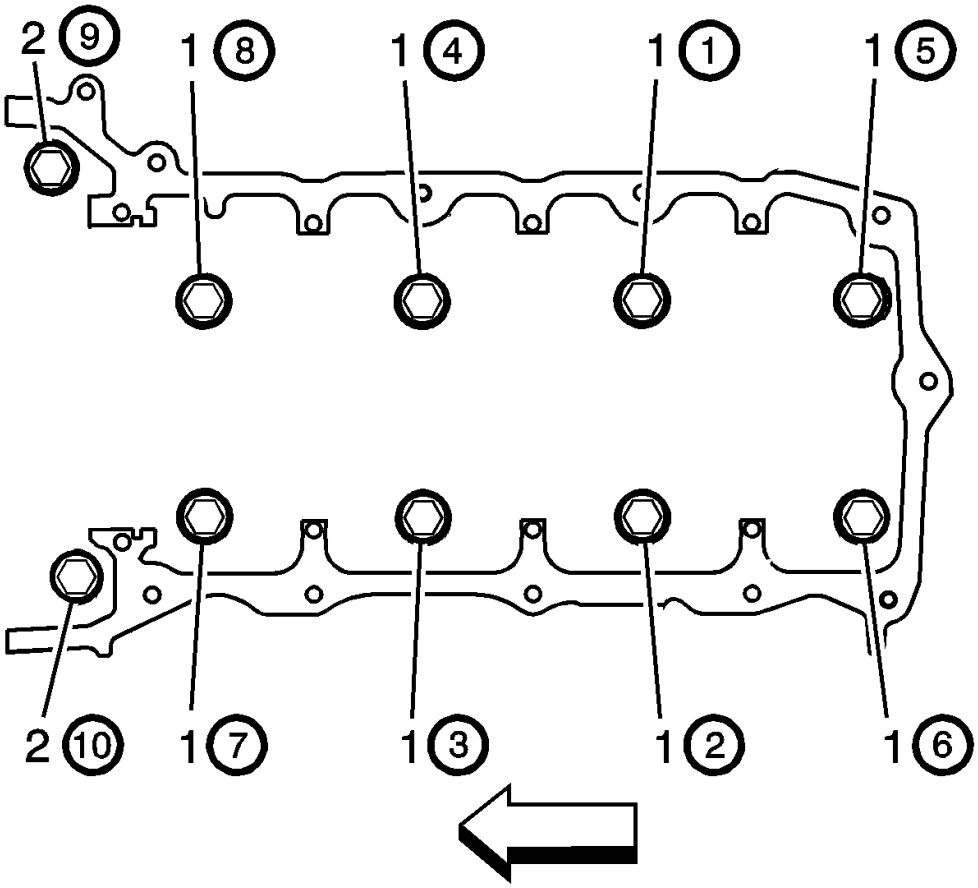

Fig. 230: Identifying M11 Cylinder Head Bolt Tightening Sequence
Courtesy of GENERAL MOTORS COMPANY

CAUTION: Refer to Fastener Caution .

NOTE:

- **DO NOT allow oil on the cylinder head bolt bosses.**
- **DO NOT reuse the old cylinder head bolts.**

5. Install the NEW M11 cylinder head bolts (1).
    1. Tighten the M11 cylinder head bolts a first pass in sequence to 30 N.m (22 lb ft).
    2. Tighten the M11 cylinder head bolts a second pass in sequence an additional 150 degrees using the **EN-45059** meter.
6. Install the 2 NEW front M8 left cylinder head bolts (2).
    1. Tighten the M8 cylinder head bolts a first pass to 15 N.m (11 lb ft).
    2. Tighten the M8 cylinder head bolts a second pass in sequence an additional 75 degrees using the

EN-45059 meter.

7. Install the left bank secondary timing chain. Refer to **Secondary Camshaft Intermediate Drive Chain Replacement - Left Side**.
8. Install the camshaft cover. Refer to **Camshaft Cover Replacement - Left Side**.
9. Install the fuel pump. Refer to **Fuel Pump Replacement** .
10. Install the oil filter adaptor. Refer to **Oil Filter Adapter Replacement**.
11. Install the exhaust manifold. Refer to **Catalytic Converter Replacement - Left Side (LFX)** .
12. Install the oil level indicator tube. Refer to **Oil Level Indicator Tube Replacement**.

CYLINDER HEAD REPLACEMENT - RIGHT SIDE (LFX)

Special Tools

EN-45059 Angle Meter

For equivalent regional tools, refer to **Special Tools** .

Removal Procedure

1. Remove the camshaft cover. Refer to **Camshaft Cover Replacement - Right Side**.
2. Remove the fuel feed pipe. Refer to **Fuel Feed Pipe Replacement** .
3. Remove the fuel feed intermediate pipe. Refer to **Fuel Feed Intermediate Pipe Replacement** .
4. Remove the right bank secondary timing chain. Refer to **Secondary Camshaft Intermediate Drive Chain Replacement - Right Side**.
5. Remove the catalytic converter. Refer to **Catalytic Converter Replacement - Right Side (LFX)** .
6. Remove the heater inlet and outlet hoses. Refer to **Heater Inlet Hose Replacement (LFX)** , and **Heater Outlet Hose Replacement (LFX)** .
7. Remove the two ground wires attached to the front and rear of the cylinder head.

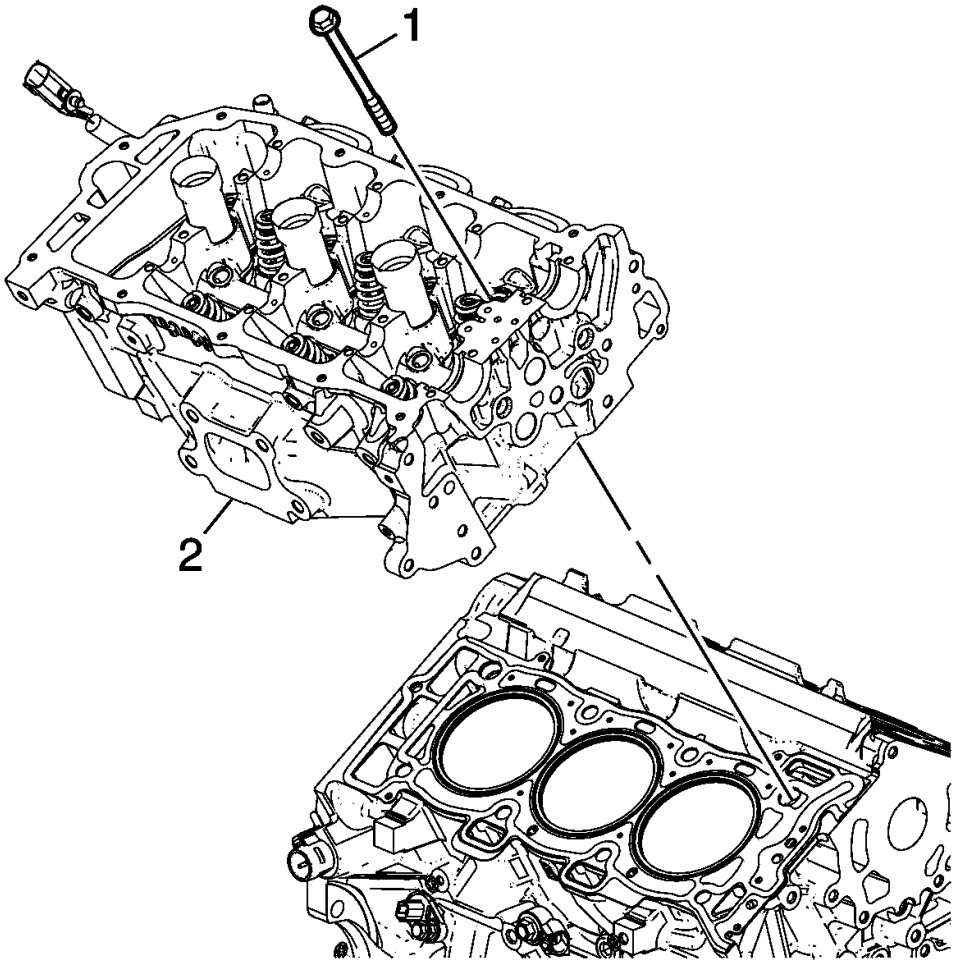

Fig. 231: View Of Right Cylinder Head & Bolts
Courtesy of GENERAL MOTORS COMPANY

8. Remove the right cylinder head bolts (1).
9. Remove the right cylinder head (2).

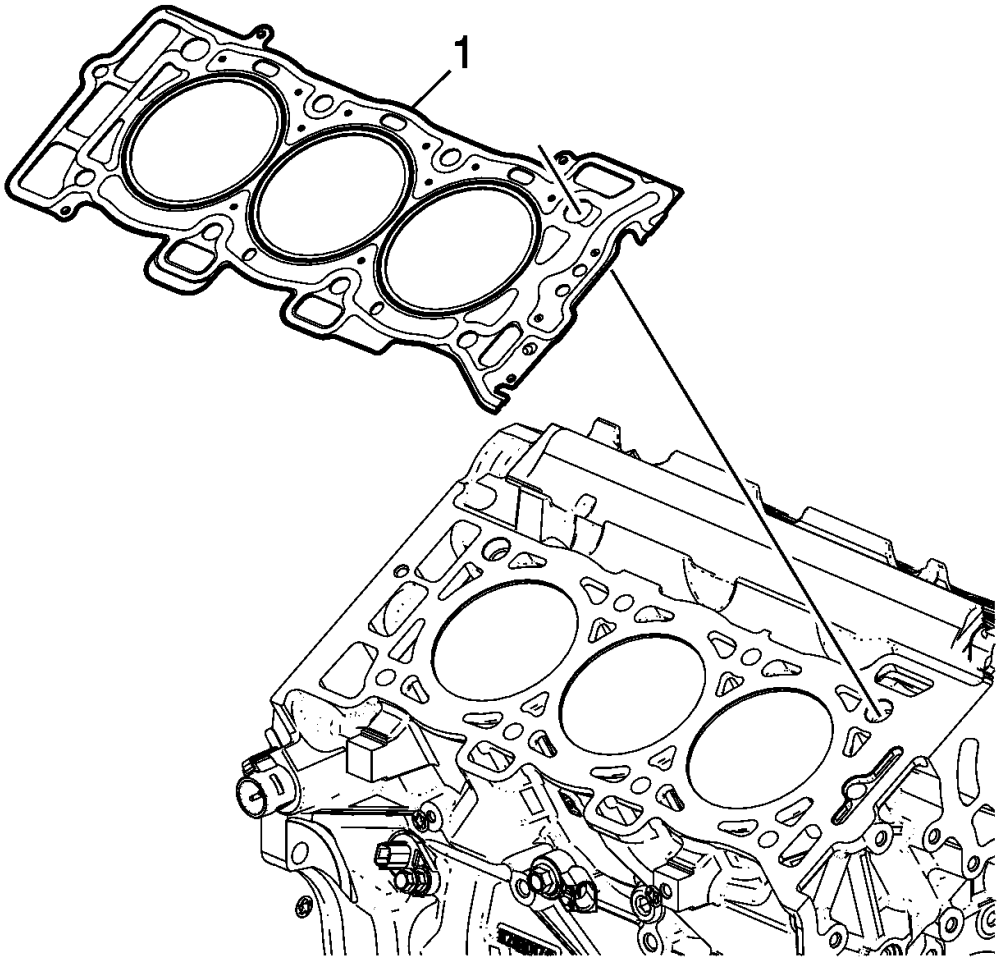

Fig. 232: View Of Right Cylinder Head Gasket
Courtesy of GENERAL MOTORS COMPANY

10. Remove and discard the cylinder head gasket (1).
11. Clean and inspect the cylinder head and the engine block sealing surfaces. Refer to **Cylinder Head Cleaning and Inspection** , and **Engine Block Cleaning and Inspection** .
12. Disassemble the cylinder head if needed . Refer to **Cylinder Head Disassemble (LFX)** .

Installation Procedure

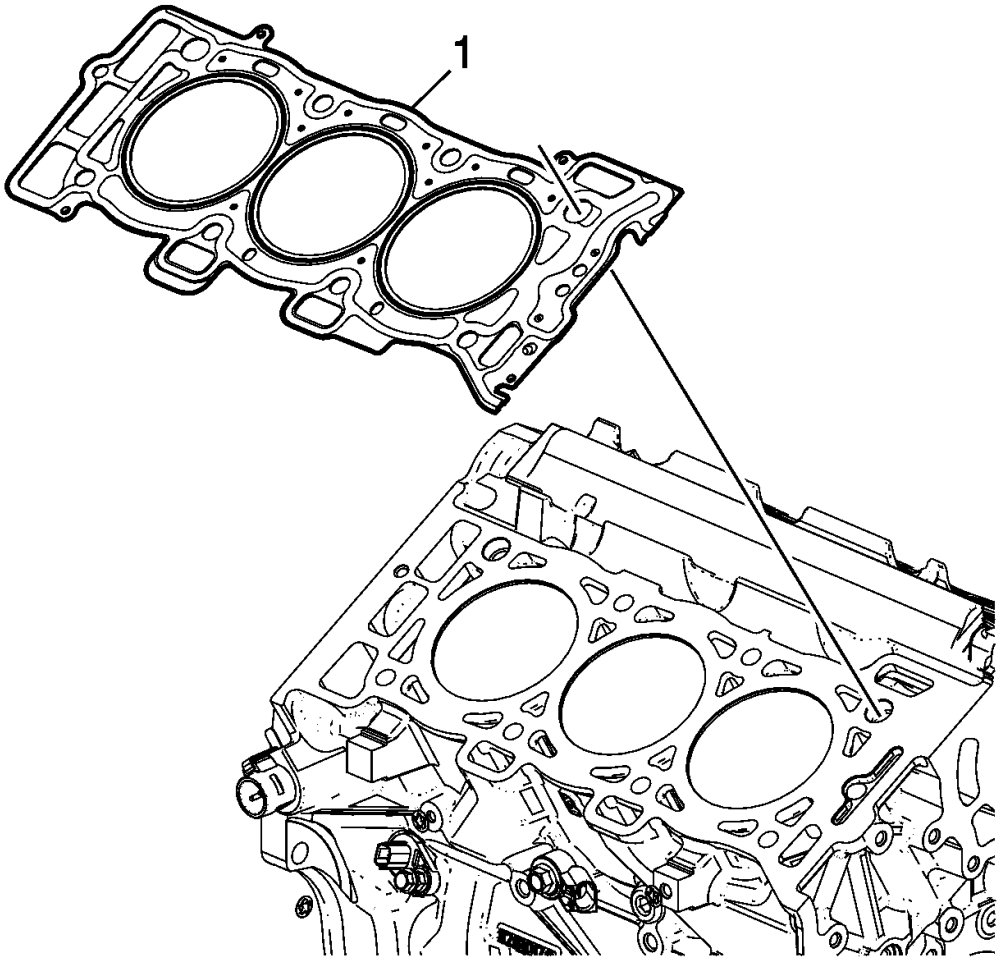

Fig. 233: View Of Right Cylinder Head Gasket
Courtesy of GENERAL MOTORS COMPANY

1. Ensure the cylinder head locating pins are securely mounted in the cylinder block deck face.
2. Install a NEW right cylinder head gasket (1) using the deck face locating pins for retention.

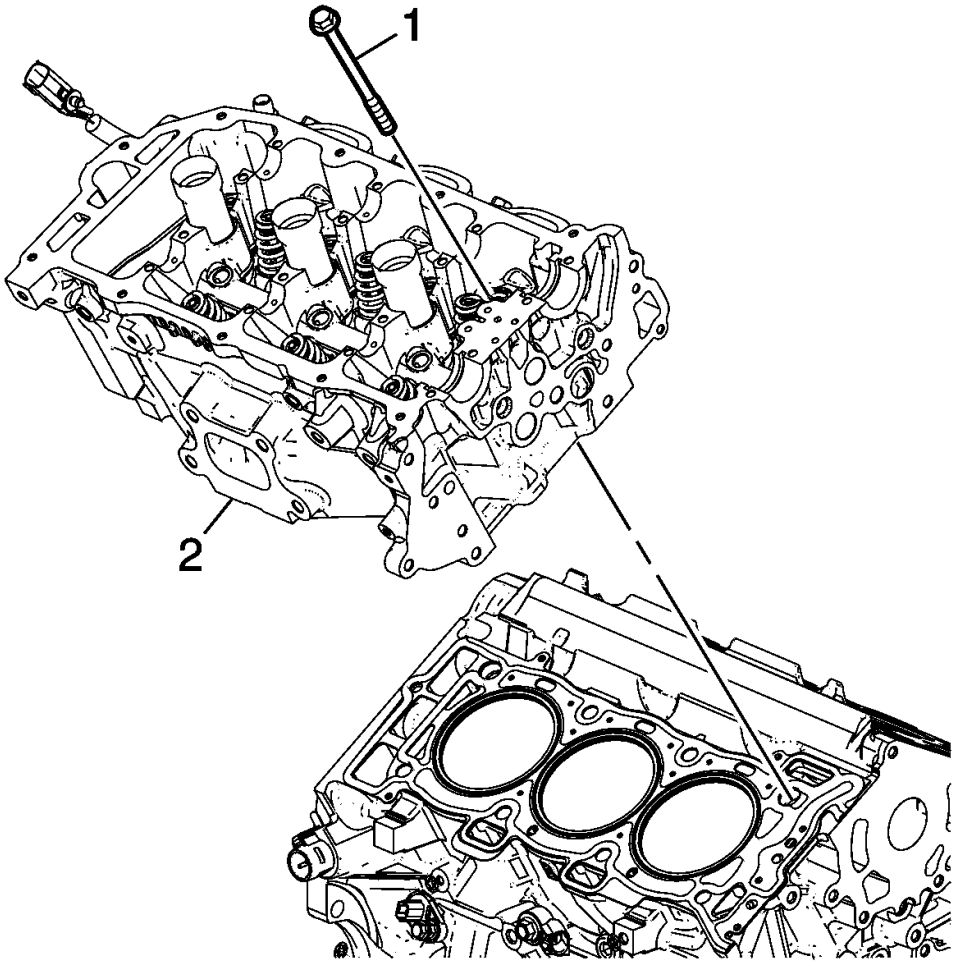

Fig. 234: View Of Right Cylinder Head & Bolts
Courtesy of GENERAL MOTORS COMPANY

3. Align the right cylinder head (2) with the deck face locating pins.
4. Place the right cylinder head in position on the deck face.

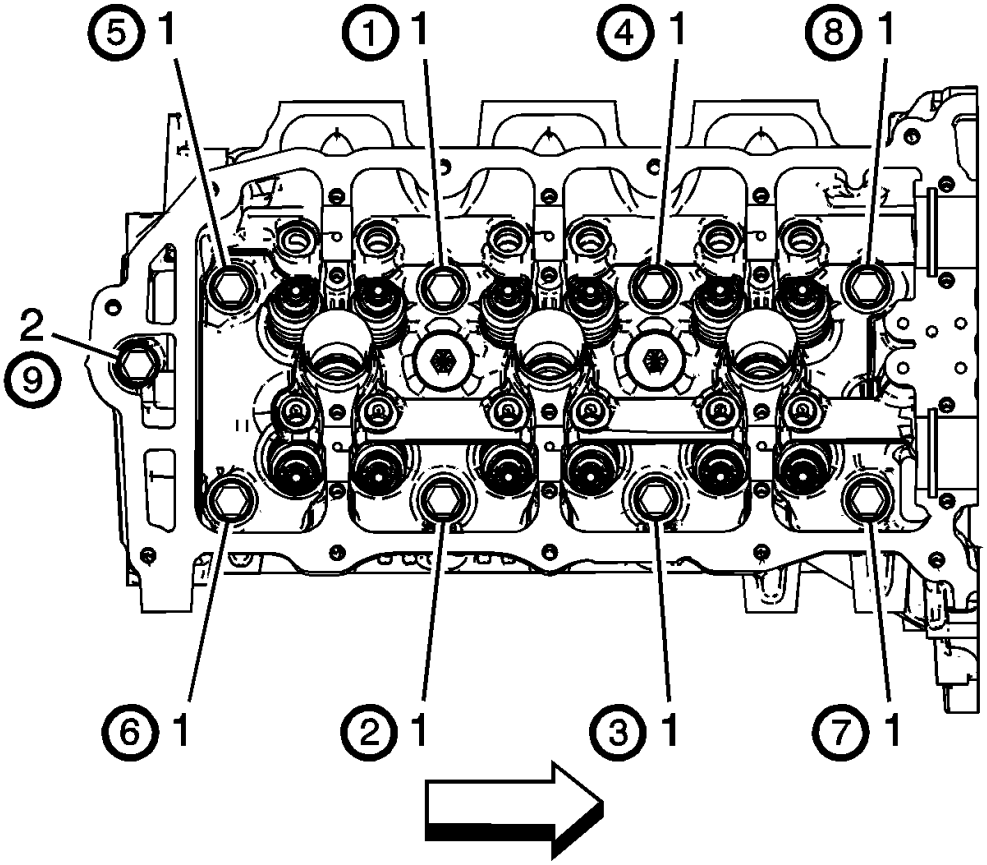

Fig. 235: Identifying M11 Cylinder Head Bolt Tightening Sequence
Courtesy of GENERAL MOTORS COMPANY

CAUTION: Refer to Fastener Caution .

NOTE:

- **DO NOT allow oil on the cylinder head bolt bosses.**
- **DO NOT reuse the old cylinder head bolts.**

5. Install the NEW M11 cylinder head bolts (1).
   1. Tighten the M11 cylinder head bolts a first pass in sequence to 30 N.m (22 lb ft).
   2. Tighten the M11 cylinder head bolts a second pass in sequence an additional 150 degrees using the **EN-45059** meter.
6. Install the NEW M8 cylinder head bolt (2).
   1. Tighten the M8 cylinder head bolt a first pass to 15 N.m (11 lb ft).
   2. Tighten the M8 cylinder head bolt a second pass an additional 75 degrees using the **EN-45059**

meter.

7. Install the right bank secondary timing chain. Refer to **Secondary Camshaft Intermediate Drive Chain Replacement - Right Side**.
8. Install the two ground wires to the front and rear of the cylinder head and tighten to 25 (18 lb ft).
9. Install the heater inlet and outlet hoses. Refer to **Heater Inlet Hose Replacement (LFX)** , and **Heater Outlet Hose Replacement (LFX)** .
10. Install the catalytic converter. Refer to **Catalytic Converter Replacement - Right Side (LFX)** .
11. Install the fuel feed intermediate pipe. Refer to **Fuel Feed Intermediate Pipe Replacement** .
12. Install the fuel feed pipe. Refer to **Fuel Feed Pipe Replacement** .
13. Install the camshaft cover. Refer to **Camshaft Cover Replacement - Right Side**.

ENGINE FLYWHEEL REPLACEMENT (MANUAL)

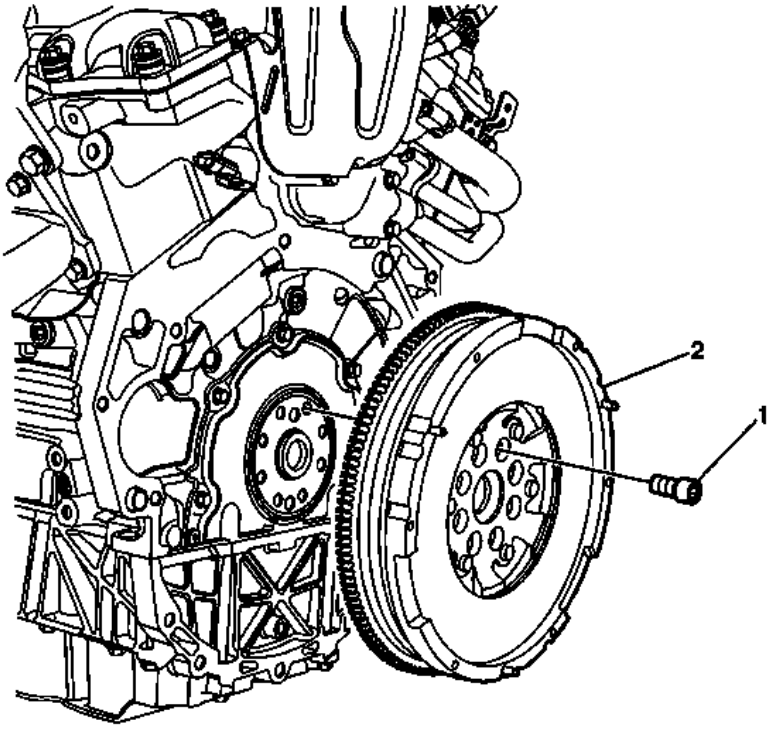

Fig. 236: Engine Flywheel (Manual)
Courtesy of GENERAL MOTORS COMPANY

Engine Flywheel Replacement (Manual)

Callout	Component Name
Preliminary Procedure Remove the clutch assembly. Refer to **Clutch Assembly Replacement** .	
	Flywheel Fastener (Qty: 8) **CAUTION:**

1	**Refer to Fastener Caution .** **Procedure** New bolts must be used whenever removing the flywheel. **Tighten** 67 (49 lb ft)
2	Flywheel **Procedure** Transfer parts as needed.

AUTOMATIC TRANSMISSION FLEX PLATE REPLACEMENT

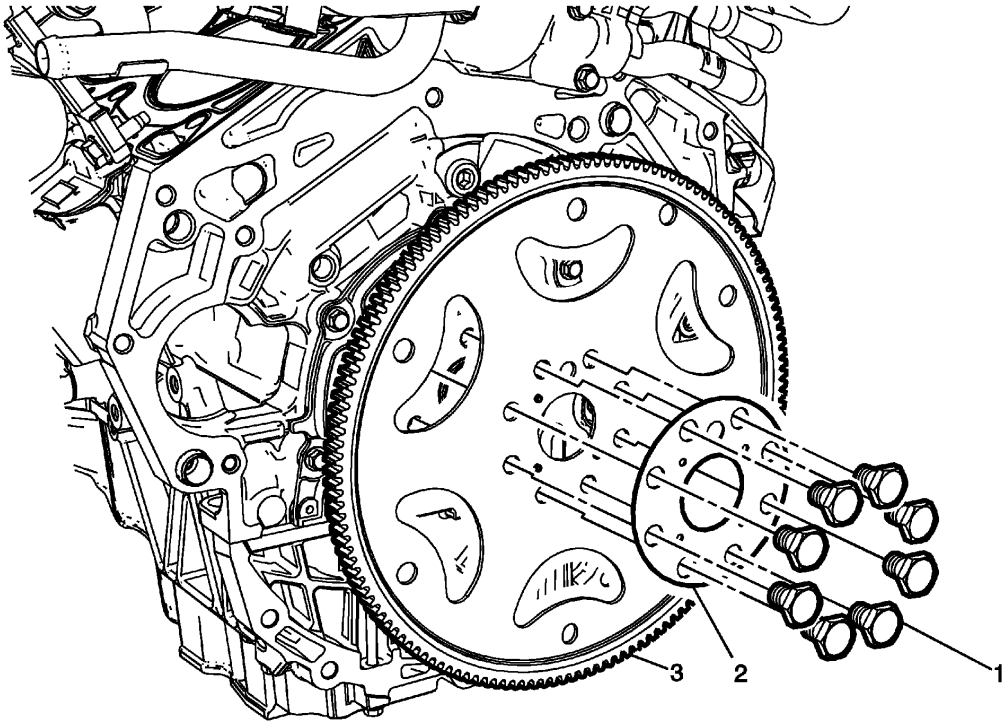

Fig. 237: Automatic Transmission Flex Plate & Components
Courtesy of GENERAL MOTORS COMPANY

Automatic Transmission Flex Plate Replacement

Callout	Component Name
Preliminary Procedure Remove the transmission. Refer to **Transmission Replacement** . **Special Tools** • **EN 45059** Angle Meter • **EN 46106** Flywheel Holding Tool	

For equivalent regional tools. Refer to **Special Tools** .	
1	Automatic Transmission Flex Plate Fastener (Qty: 8) **CAUTION:** **Refer to Fastener Caution .** **Procedure** New bolts must be used whenever removing the automatic transmission flex plate. **Tighten** 30 N.m (22 lb ft) plus 45 degrees
2	Automatic Transmission Flex Spacer Plate
3	Automatic Transmission Flex Plate **Procedure** 1. For cleaning and inspection . Refer to **Engine Flywheel Cleaning and Inspection** . 2. Transfer parts as necessary.

CRANKSHAFT REAR OIL SEAL AND HOUSING REPLACEMENT

Special Tools

- **EN-42183** Handle
- **EN-46109** Guide Pin Set
- **EN-47839** Crankshaft Rear Oil Seal Installation Tool

For equivalent regional tools, refer to **Special Tools** .

Removal Procedure

1. If equipped with an automatic transmission, remove the flex plate. Refer to **Automatic Transmission Flex Plate Replacement**.
2. If equipped with a manual transmission, remove the flywheel. Refer to **Engine Flywheel Replacement (Manual)**
3. Remove the oil pan. Refer to **Oil Pan Replacement**.

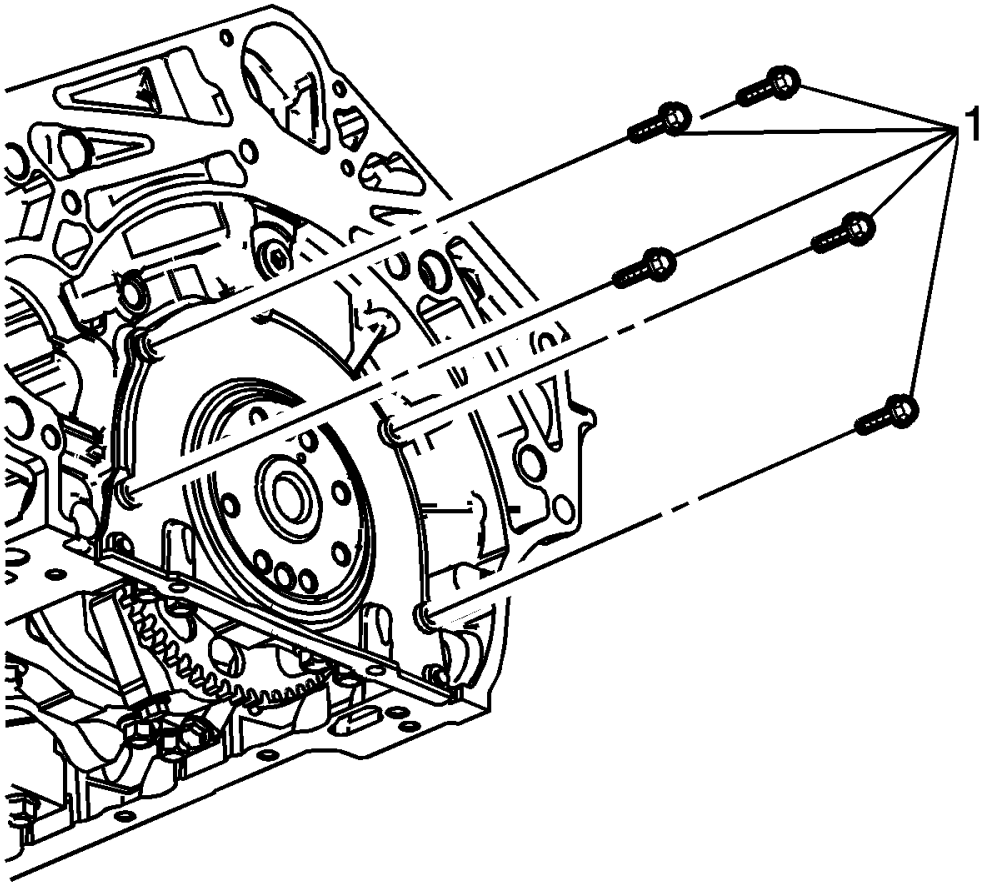

Fig. 238: Crankshaft Rear Oil Seal & Housing Bolts
Courtesy of GENERAL MOTORS COMPANY

4. Remove the crankshaft rear oil seal and housing bolts (1).

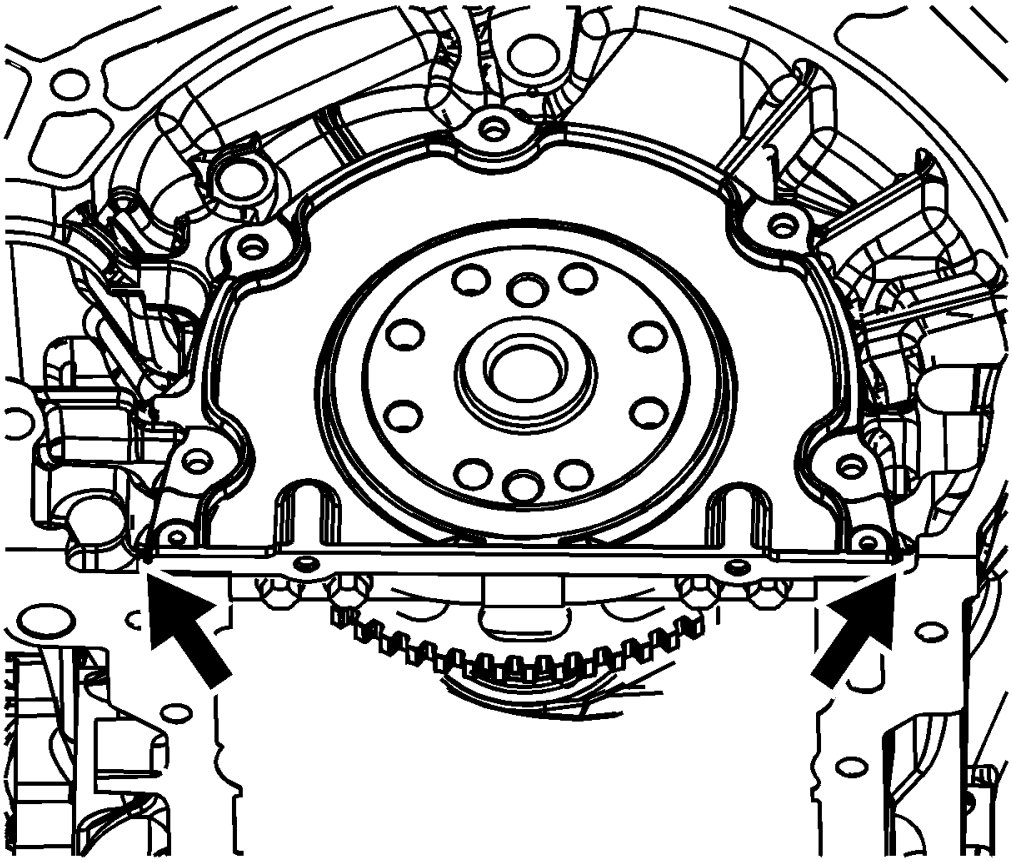

Fig. 239: Crankshaft Rear Oil Seal Housing Pry Points
Courtesy of GENERAL MOTORS COMPANY

5. Use the pry points located at the edge of the crankshaft rear oil seal housing to separate the RTV sealant.

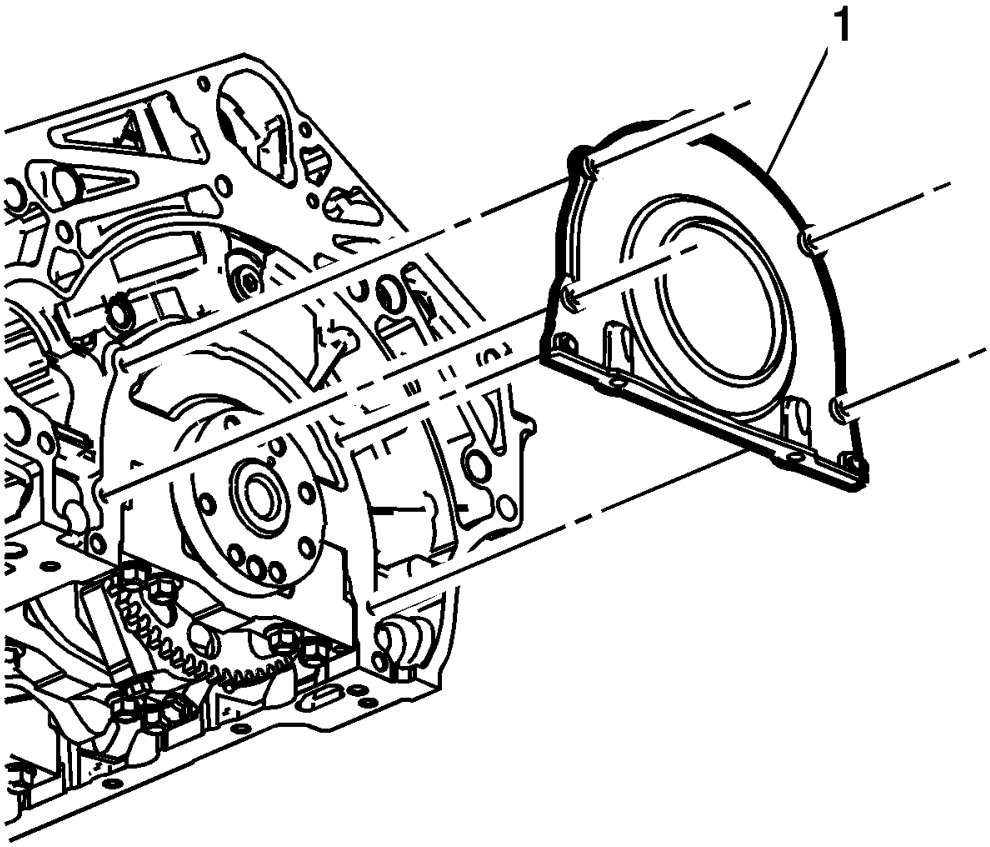

Fig. 240: Crankshaft Rear Oil Seal Housing
Courtesy of GENERAL MOTORS COMPANY

6. Remove and discard the crankshaft rear oil seal and housing (1). Refer to **Crankshaft Rear Oil Seal and Housing Removal** .

Installation Procedure

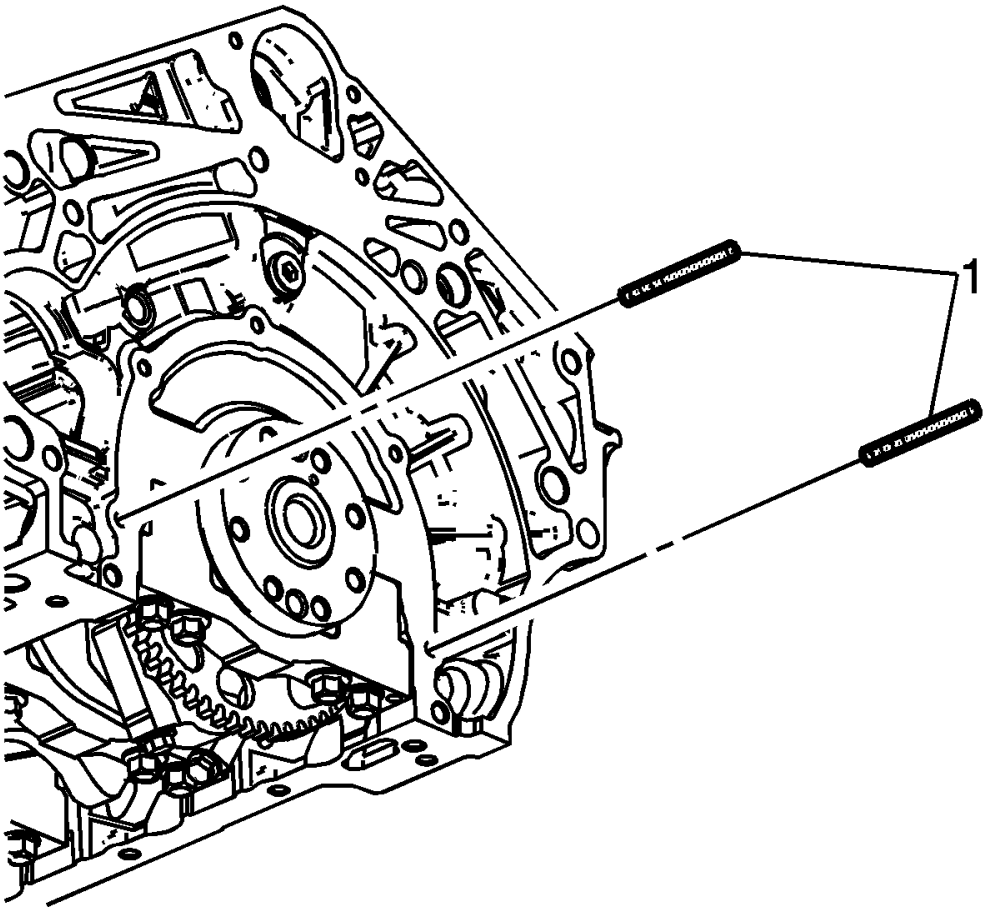

Fig. 241: Guide Pin Set
Courtesy of GENERAL MOTORS COMPANY

1. Install the 6 mm (0.236 in) guides from the EN-46109 pin set into the 2 crankshaft rear oil seal housing corner bolt holes of the engine block

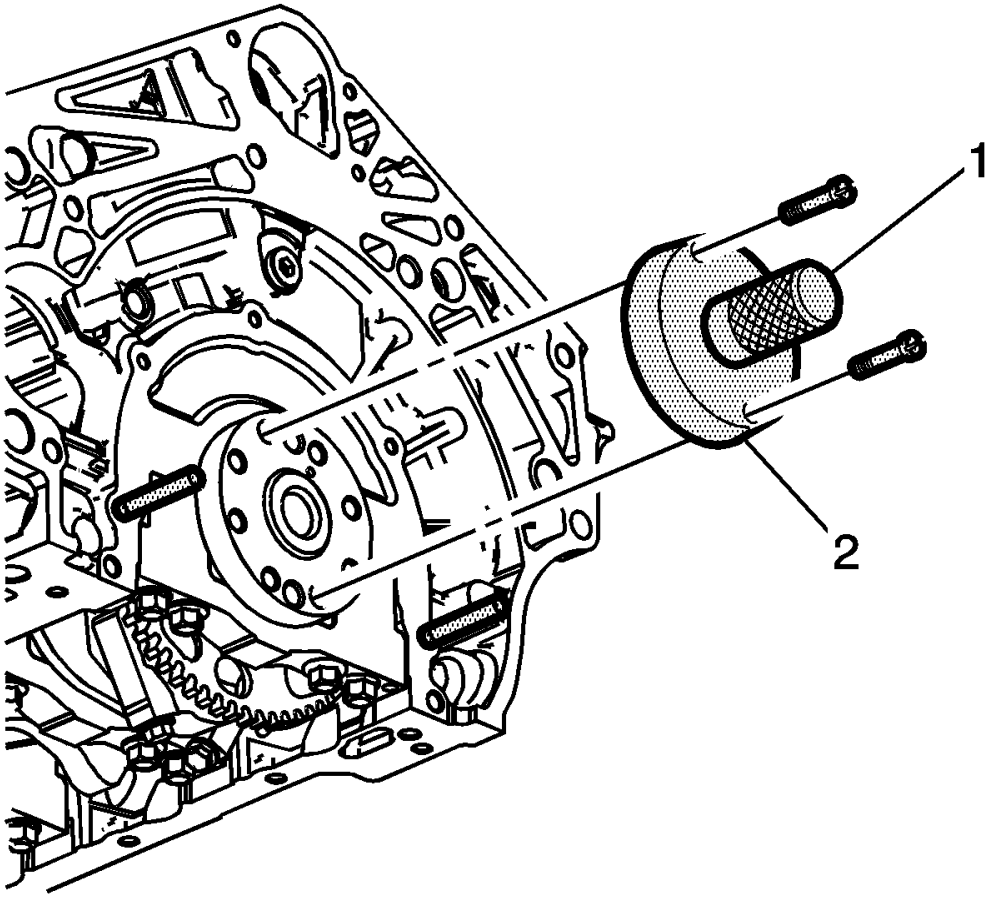

Fig. 242: Crankshaft Rear Oil Seal Installation Tool & Handle
Courtesy of GENERAL MOTORS COMPANY

2. Install the EN-47839 tool with the EN-42183 handle (1, 2) onto the rear of the crankshaft flange.

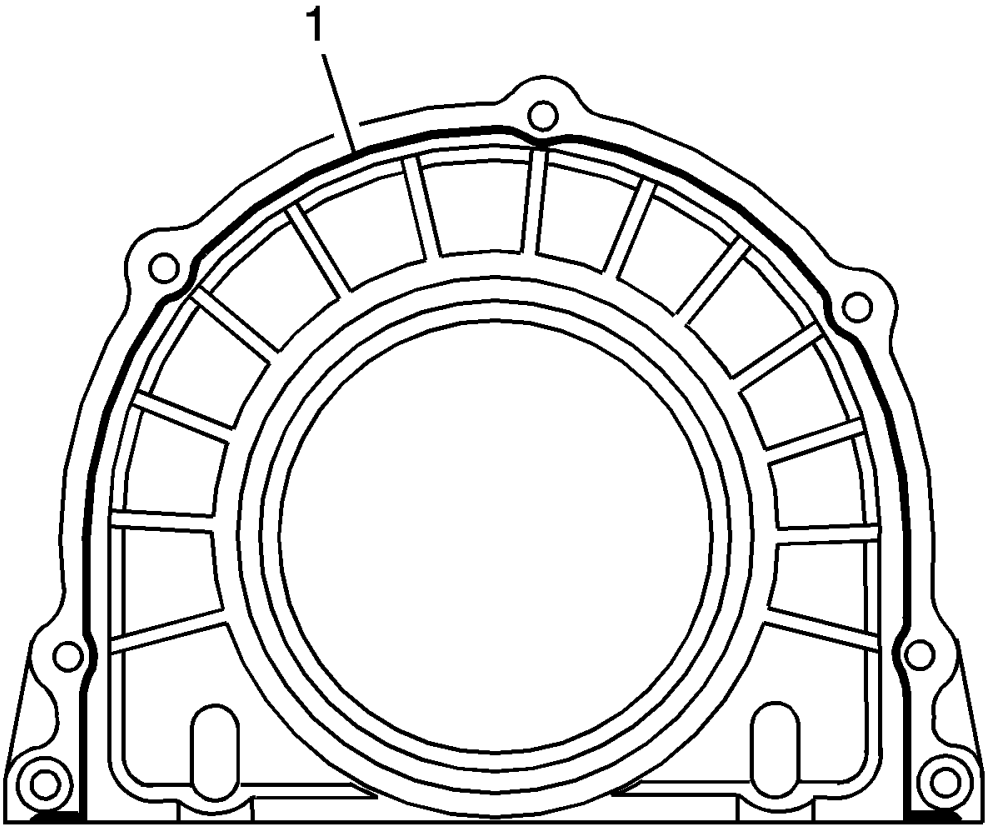

Fig. 243: RTV Sealant On Crankshaft Rear Oil Seal Housing
Courtesy of GENERAL MOTORS COMPANY

3. Place a 3 mm (0.118 in) bead of RTV sealant (1) to the NEW crankshaft rear oil seal housing as shown (1). Refer to **Adhesives, Fluids, Lubricants, and Sealers** , **Adhesives, Fluids, Lubricants, and Sealers (Korea)** , for recommended sealant.

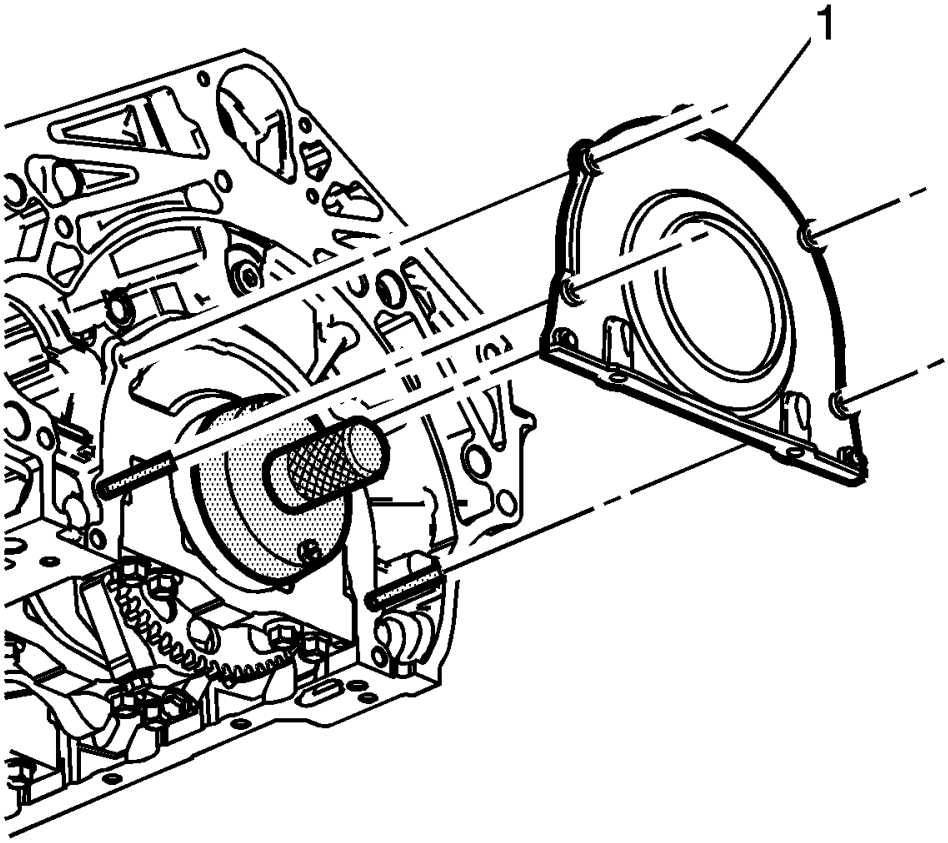

Fig. 244: Crankshaft Rear Oil Seal Housing
Courtesy of GENERAL MOTORS COMPANY

NOTE: **DO NOT allow any engine oil on the area where the crankshaft rear oil seal housing is to be installed.**

4. Install the crankshaft rear oil seal housing (1) to the engine block.

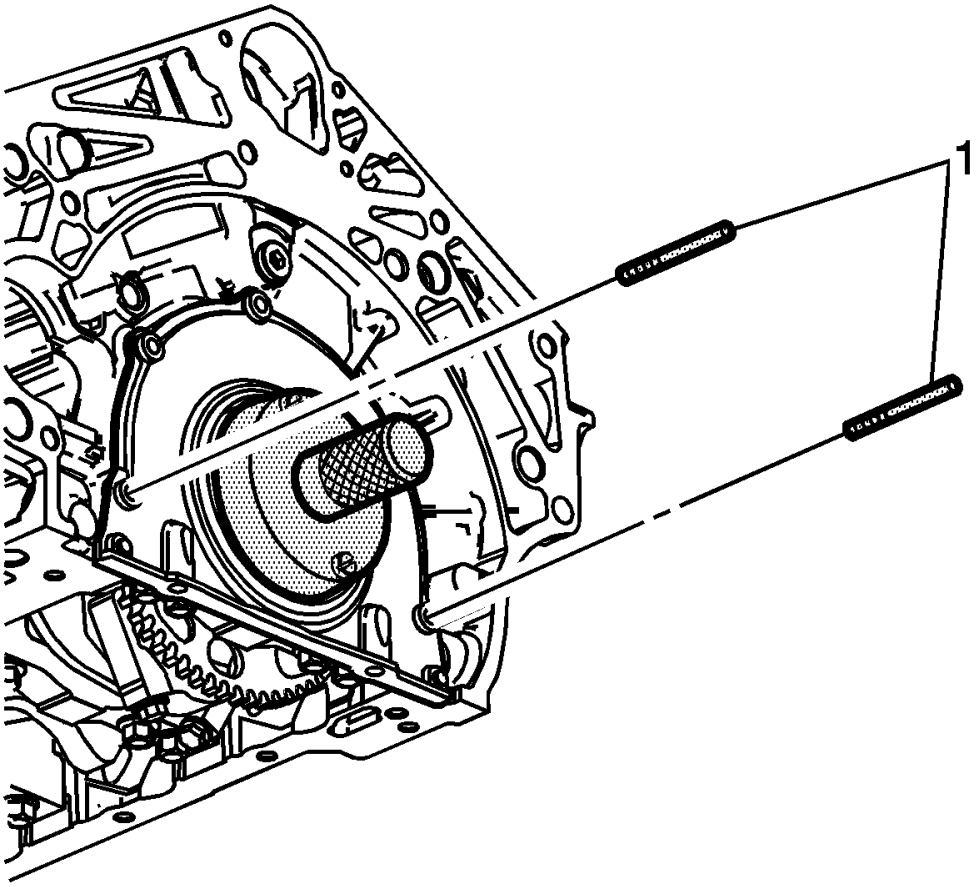

Fig. 245: Guide Pin Set
Courtesy of GENERAL MOTORS COMPANY

5. Remove the EN-46109 pin set 6 mm (0.236 in) guides (1) from the engine block.

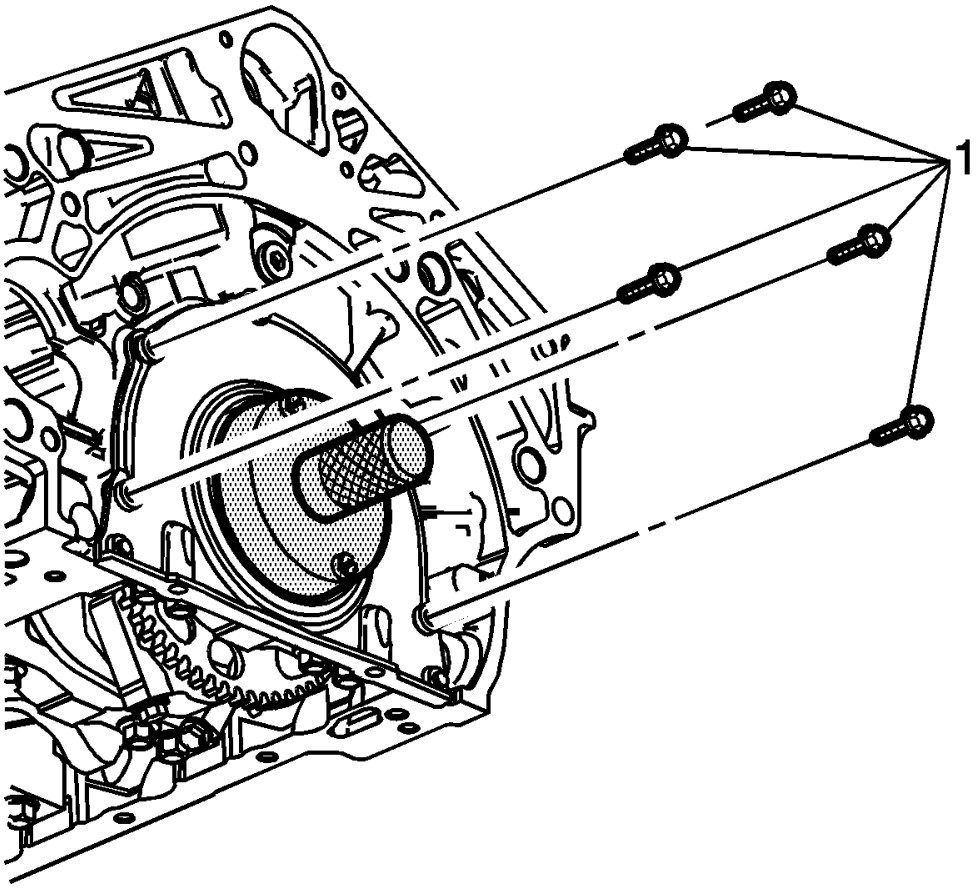

Fig. 246: Crankshaft Rear Oil Seal Housing Bolts
Courtesy of GENERAL MOTORS COMPANY

6. Install the crankshaft rear oil seal housing bolts (1).

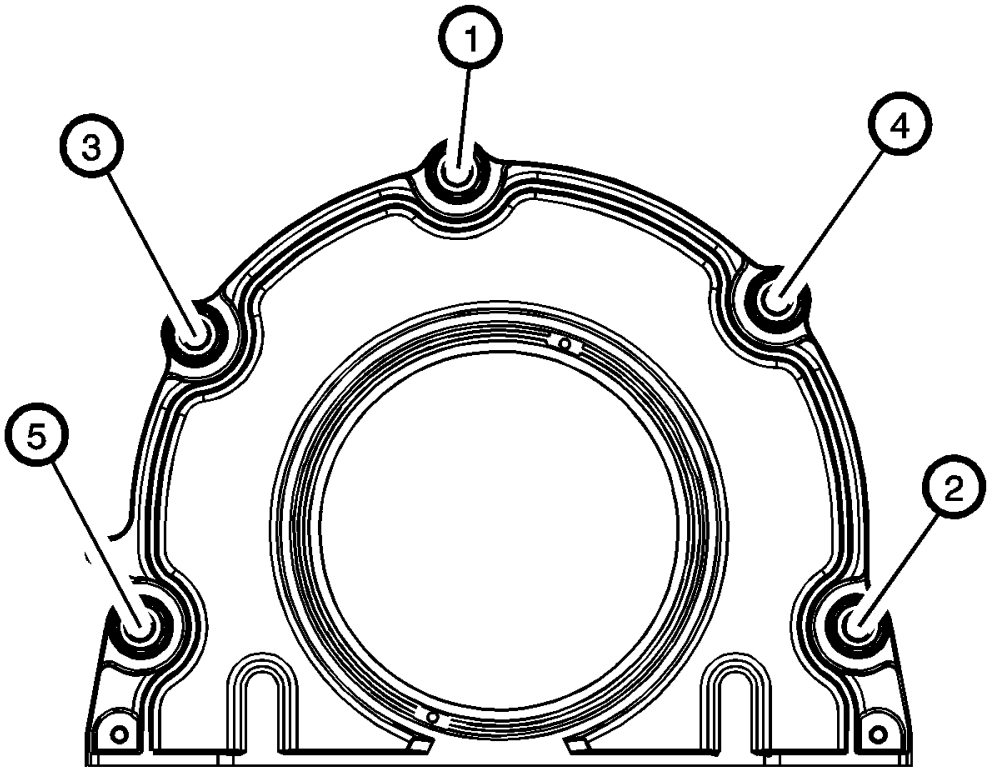

Fig. 247: Crankshaft Rear Oil Seal Housing Bolt Sequence
Courtesy of GENERAL MOTORS COMPANY

CAUTION: Refer to Fastener Caution .

7. Tighten the crankshaft rear oil seal housing bolts in sequence and tighten to 10 N.m (89 lb in).

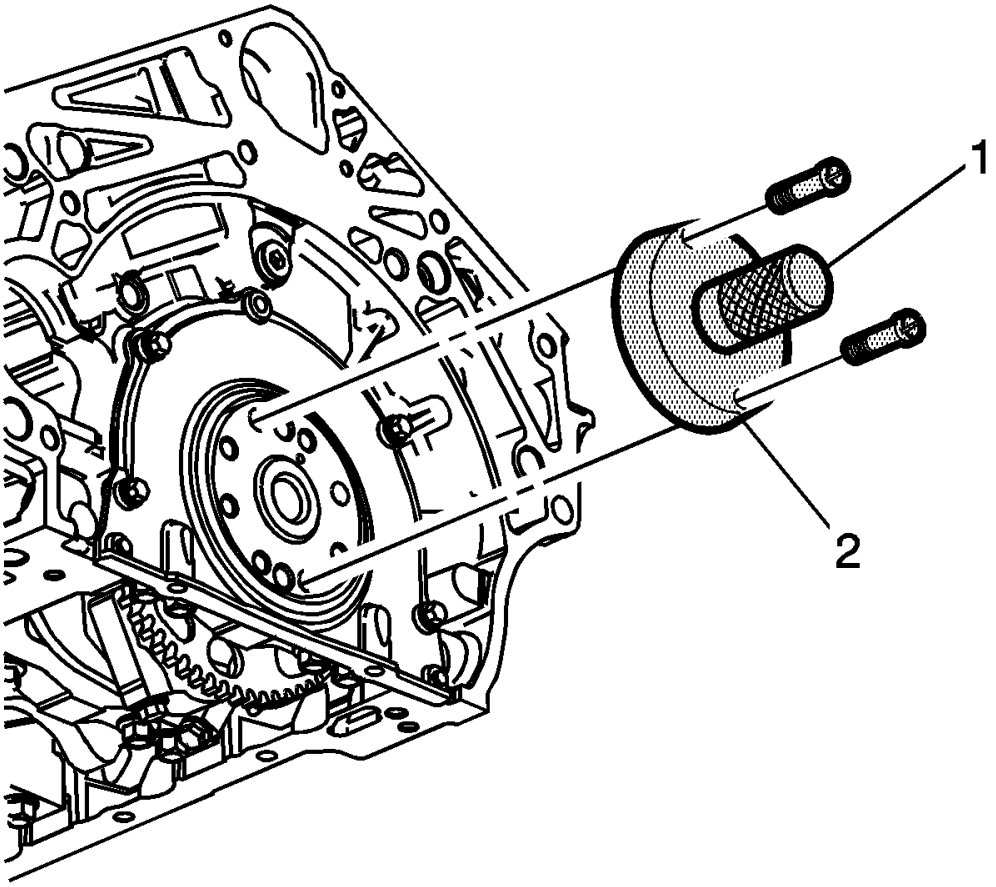

Fig. 248: Crankshaft Rear Oil Seal Installation Tool & Handle
Courtesy of GENERAL MOTORS COMPANY

8. Remove the EN-47839 tool and EN-42183 handle (1, 2) from the crankshaft flange.
9. Install the oil pan. Refer to **Oil Pan Replacement**.
10. If equipped with an automatic transmission, install the flex plate. Refer to **Automatic Transmission Flex Plate Replacement**.
11. If equipped with a manual transmission, install the flywheel. Refer to **Engine Flywheel Replacement (Manual)**

OIL PUMP REPLACEMENT

Removal Procedure

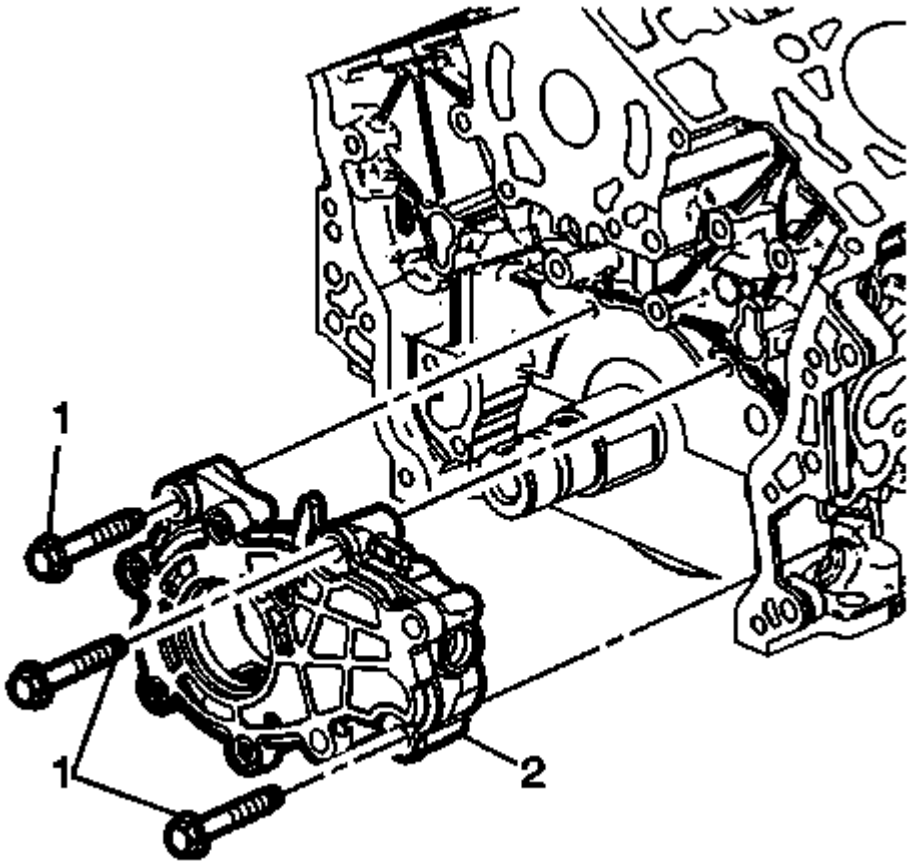

Fig. 249: Oil Pump & Bolts
Courtesy of GENERAL MOTORS COMPANY

NOTE: Do not remove the left bank idler sprocket.

1. Remove the primary timing chain. Refer to **Primary Camshaft Drive Chain and Sprockets Replacement**.
2. Remove the crankshaft sprocket. Refer to **Crankshaft Sprocket Removal** .
3. Remove the oil pump bolts (1) and the oil pump (2).

Installation Procedure

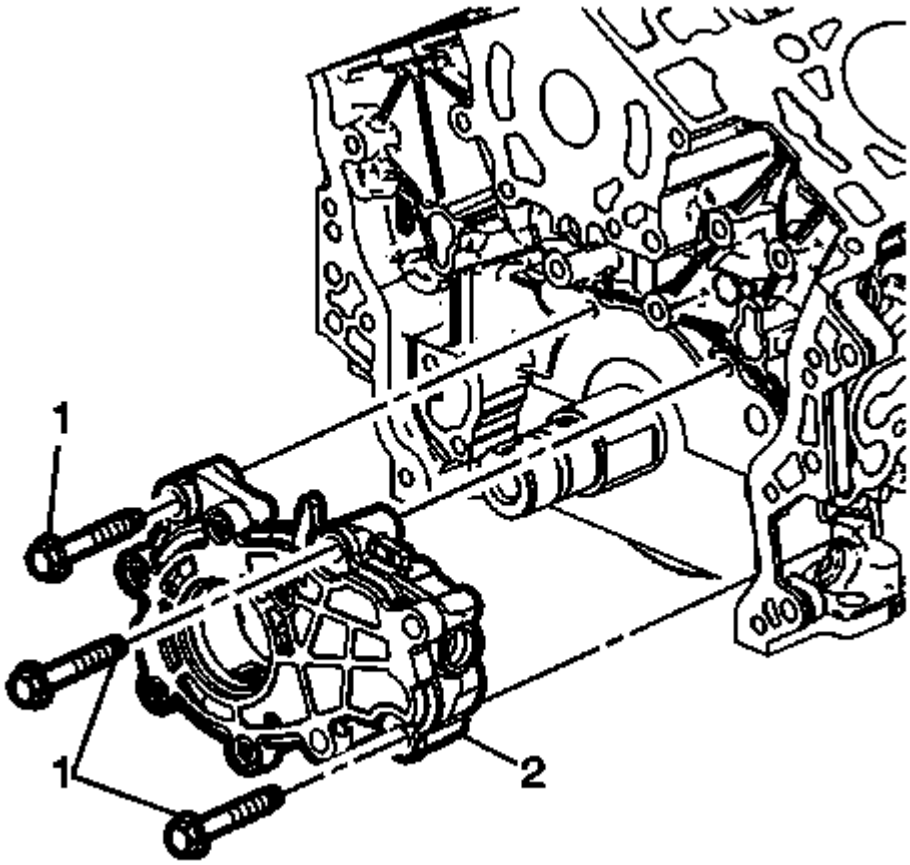

Fig. 250: Oil Pump & Bolts
Courtesy of GENERAL MOTORS COMPANY

1. Align the oil pump drive gear with the crankshaft flats and install the oil pump (2) to the engine block.
2. Align the pump body with the mounting holes in the cylinder block.

CAUTION: Refer to Fastener Caution .

3. Install the oil pump bolts and tighten to 25 N.m (18 lb ft).
4. Install the primary timing chain. Refer to **Primary Camshaft Drive Chain and Sprockets Replacement**.

ENGINE OIL PAN REPLACEMENT

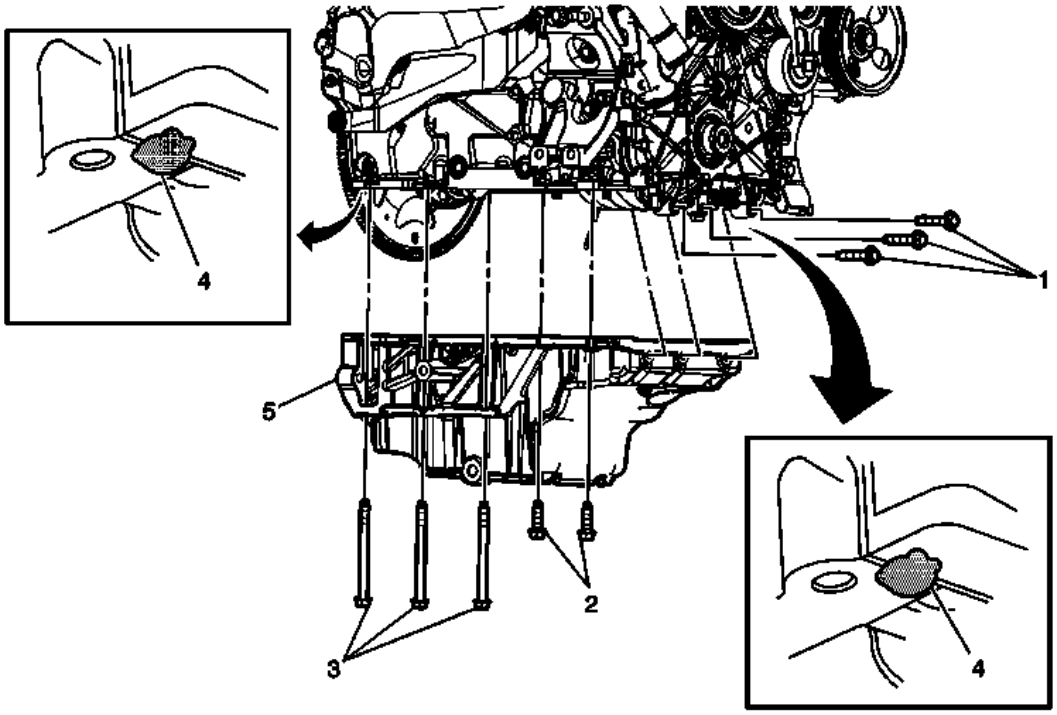

Fig. 251: Engine Oil Pan, Sealant And Fasteners
Courtesy of GENERAL MOTORS COMPANY

Engine Oil Pan Replacement

Callout	Component Name
Preliminary Procedures 1. Remove the front cover. Refer to **Engine Front Cover Replacement**. 2. Remove the front frame. Refer to **Drivetrain and Front Suspension Frame Replacement** . 3. Drain the engine oil. Refer to **Engine Oil and Oil Filter Replacement**. 4. Remove the right side mount bracket. Refer to **Engine Mount Bracket Replacement - Right Side**.	
1	Oil Pan Fastener (Qty: 3) **CAUTION:** **Refer to Fastener Caution .** **Tighten** 23 N.m (17 lb ft)
2	Oil Pan Fastener (Qty: 5) **Tighten** 25 N.m (18 lb ft)
	Oil Pan Fastener (Qty: 6)

3	**Procedure** 1. Remove the 2 oil pan to rear seal housing bolts. 2. Remove the transmission to oil pan bolts. **Tighten** 23 N.m (17 lb ft)
4	Oil Pan Sealant **Procedure** 1. Apply a 5 mm (0.2 in) bead of sealant 20 mm (0.8 in) long to the engine block. Refer to **Adhesives, Fluids, Lubricants, and Sealers** , **Adhesives, Fluids, Lubricants, and Sealers (Korea)** . 2. Apply the sealant directly onto the tabs of the front cover gasket that protrude into the oil pan surface. • The alignment of the structural oil pan is critical. The rear bolt hole locations of the oil pan provide mounting points for the transmission housing. To ensure the rigidity of the powertrain and correct transmission alignment, it is important that the rear of the block and the rear of the oil pan are flush or even. The rear of the oil pan must NEVER protrude beyond the engine block and the transmission housing plane. • A new oil pan gasket should be used whenever the oil pan is removed from the engine assembly.
5	Oil Pan **Procedure** 1. Disconnect any electrical connectors. 2. Transfer components as necessary.

ENGINE OIL PRESSURE SENSOR AND/OR SWITCH REPLACEMENT

Removal Procedure

1. Remove the air cleaner assembly. Refer to **Air Cleaner Assembly Replacement** .

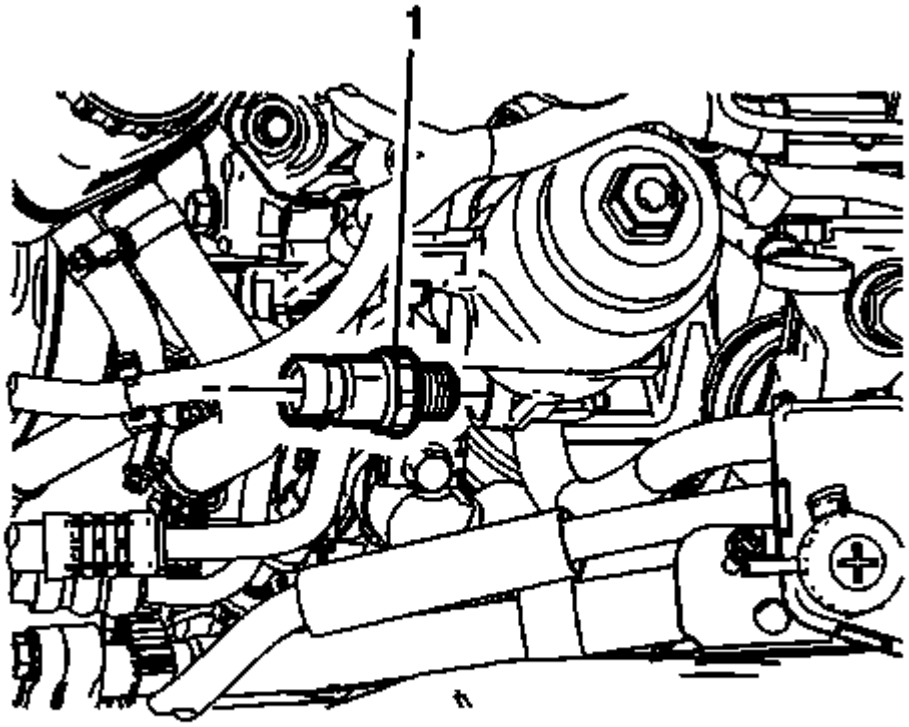

Fig. 252: Oil Pressure Sensor Electrical Connector
Courtesy of GENERAL MOTORS COMPANY

2. Disconnect the oil pressure sensor electrical connector.
3. Remove the oil pressure sensor (1).

Installation Procedure

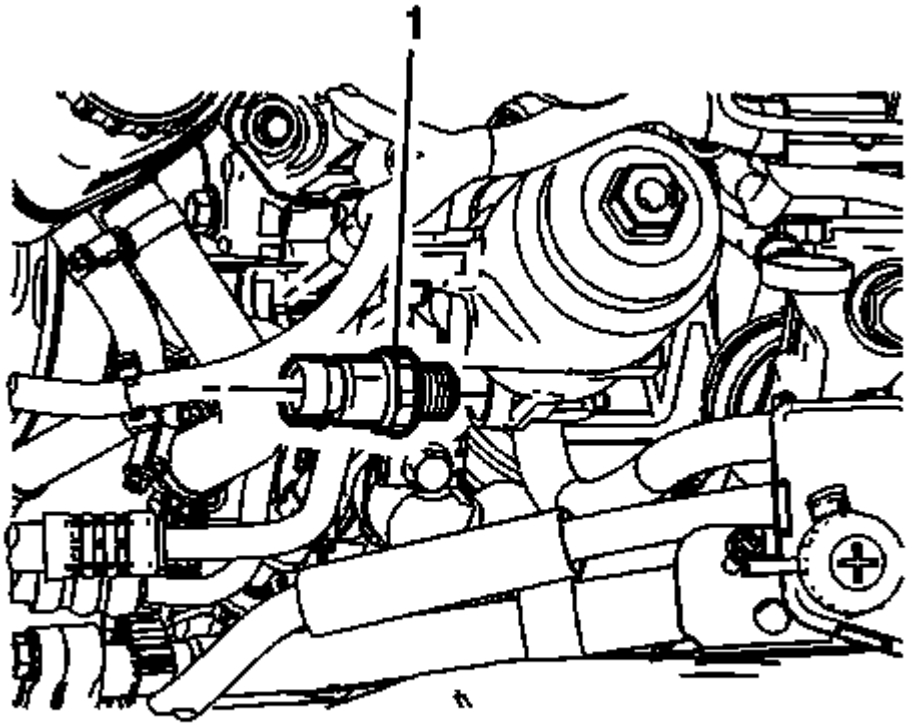

Fig. 253: Oil Pressure Sensor Electrical Connector
Courtesy of GENERAL MOTORS COMPANY

CAUTION: Refer to Fastener Caution .

1. Install the oil pressure sensor (1) and tighten to 20 N.m (15 lb ft).
2. Connect the oil pressure sensor electrical connector.
3. Install the air cleaner assembly. Refer to **Air Cleaner Assembly Replacement** .

ENGINE OIL LEVEL SENSOR AND/OR OIL LEVEL SWITCH REPLACEMENT

Removal Procedure

1. Remove the oil pan. Refer to **Oil Pan Replacement**.

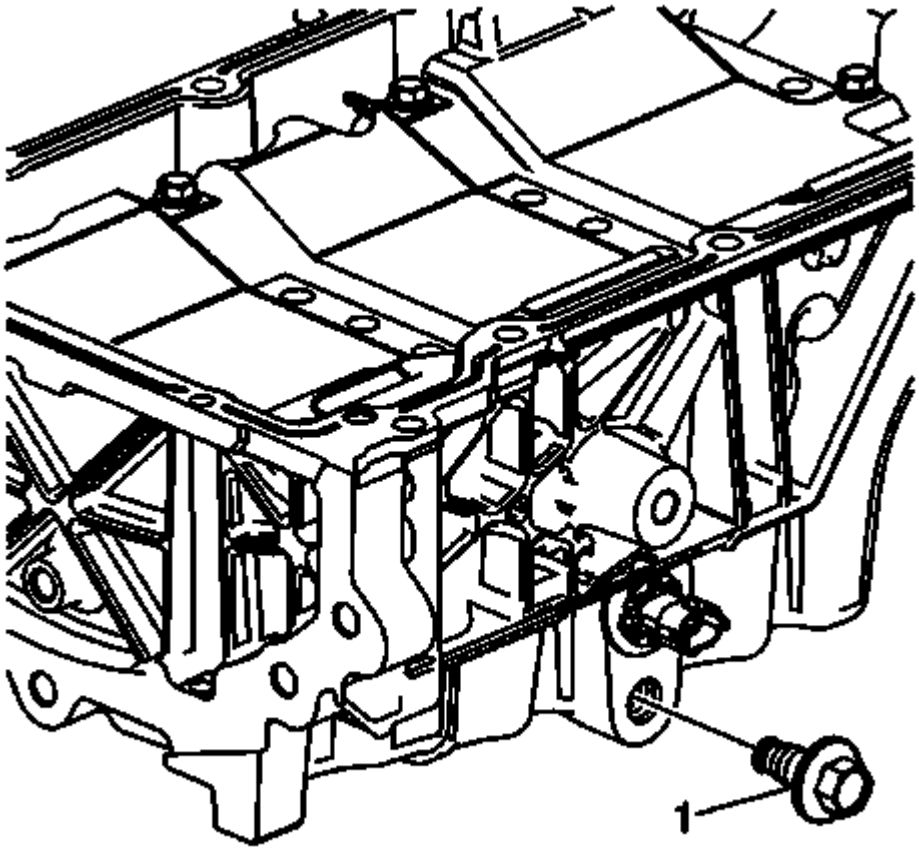

Fig. 254: Engine Oil Pan Drain Plug
Courtesy of GENERAL MOTORS COMPANY

2. Remove the oil pan drain plug (1)

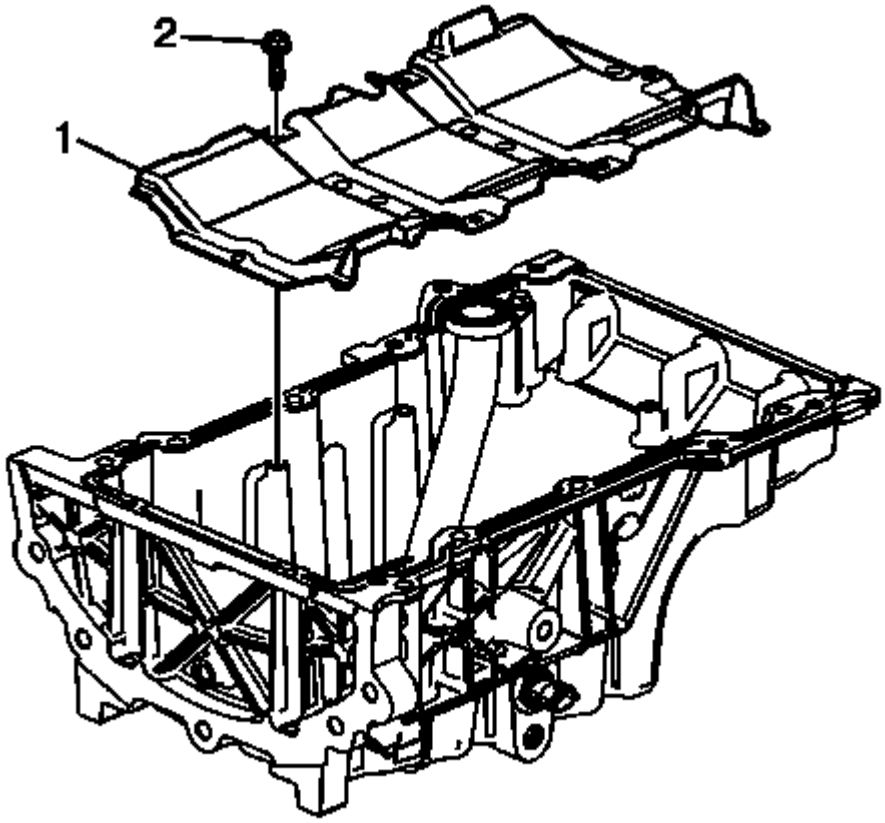

Fig. 255: Engine Oil Pan Scraper & Bolts
Courtesy of GENERAL MOTORS COMPANY

3. Remove the oil pan scraper bolts (2).
4. Remove the oil pan scraper (1).

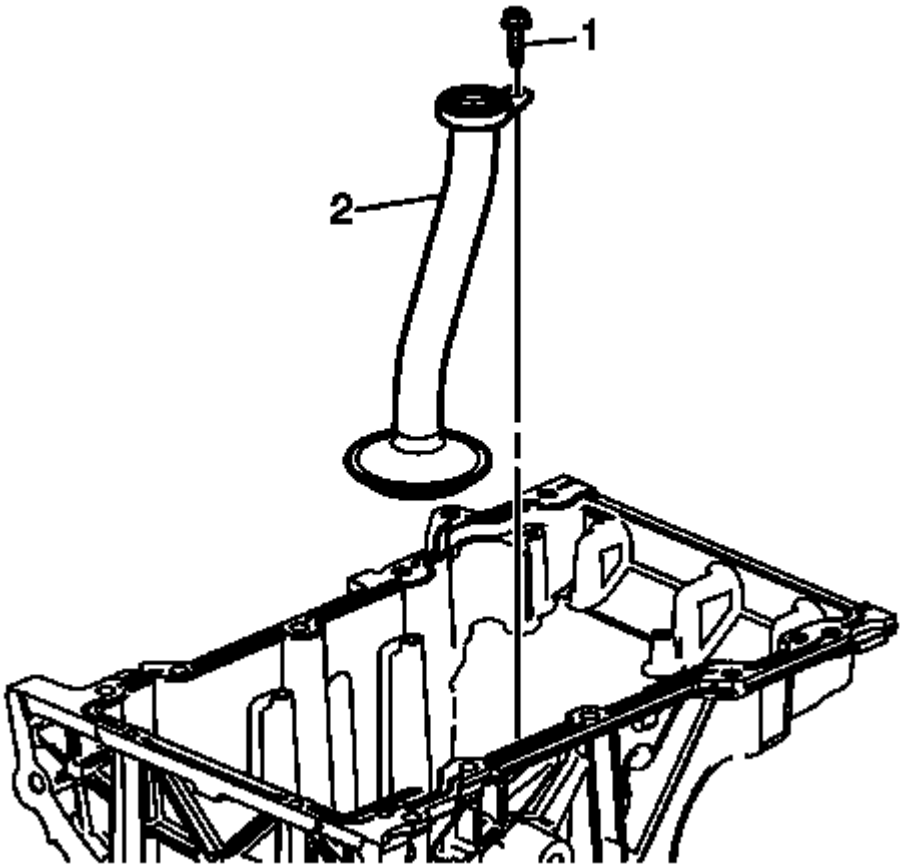

Fig. 256: Oil Suction Pipe & Bolts
Courtesy of GENERAL MOTORS COMPANY

5. Remove the oil suction pipe bolts (1).
6. Remove the oil suction pipe (2).

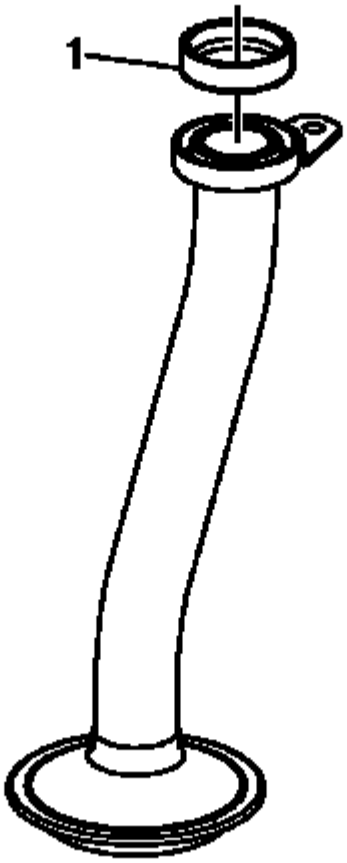

Fig. 257: Oil Suction Pipe Seal
Courtesy of GENERAL MOTORS COMPANY

7. Remove and discard the oil suction pipe seal (1).

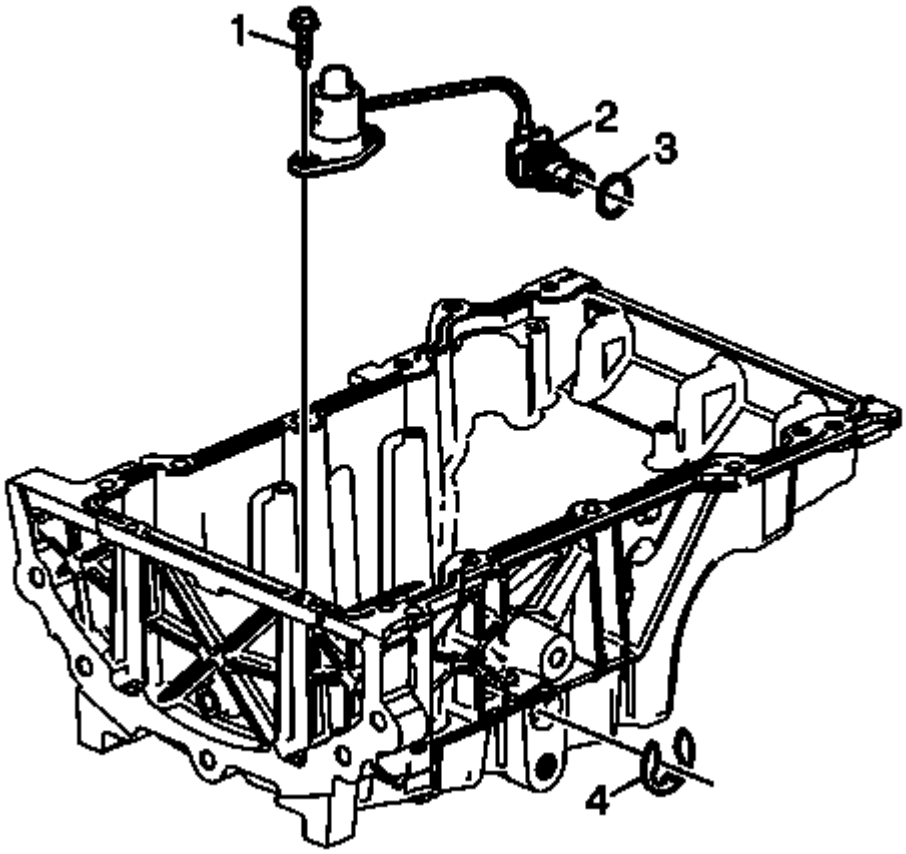

Fig. 258: Engine Oil Level Switch & Components
Courtesy of GENERAL MOTORS COMPANY

8. Remove the engine oil level switch clip (4).
9. Remove the engine oil level switch bolts (1).
10. Remove the engine oil level switch (2).
11. Remove and discard the engine oil level switch seal (3).

Installation Procedure

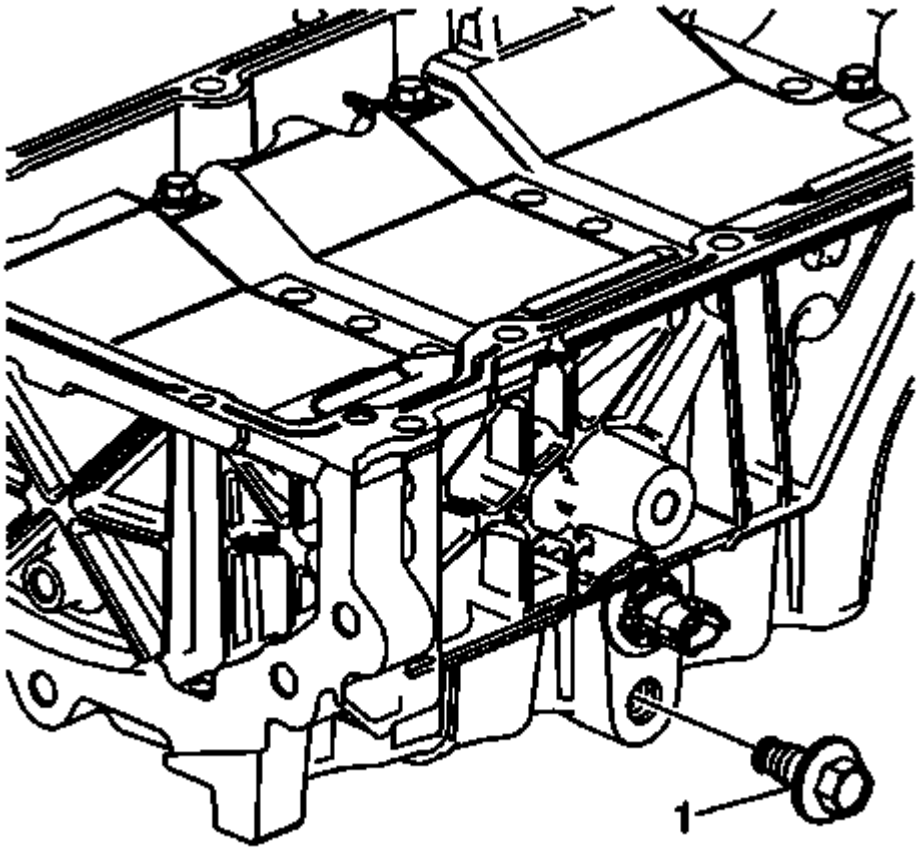

Fig. 259: Engine Oil Pan Drain Plug
Courtesy of GENERAL MOTORS COMPANY

CAUTION: Refer to Fastener Caution .

1. Install the oil pan drain plug (1) and tighten the oil pan drain plug to 25 N.m (18 lb ft).

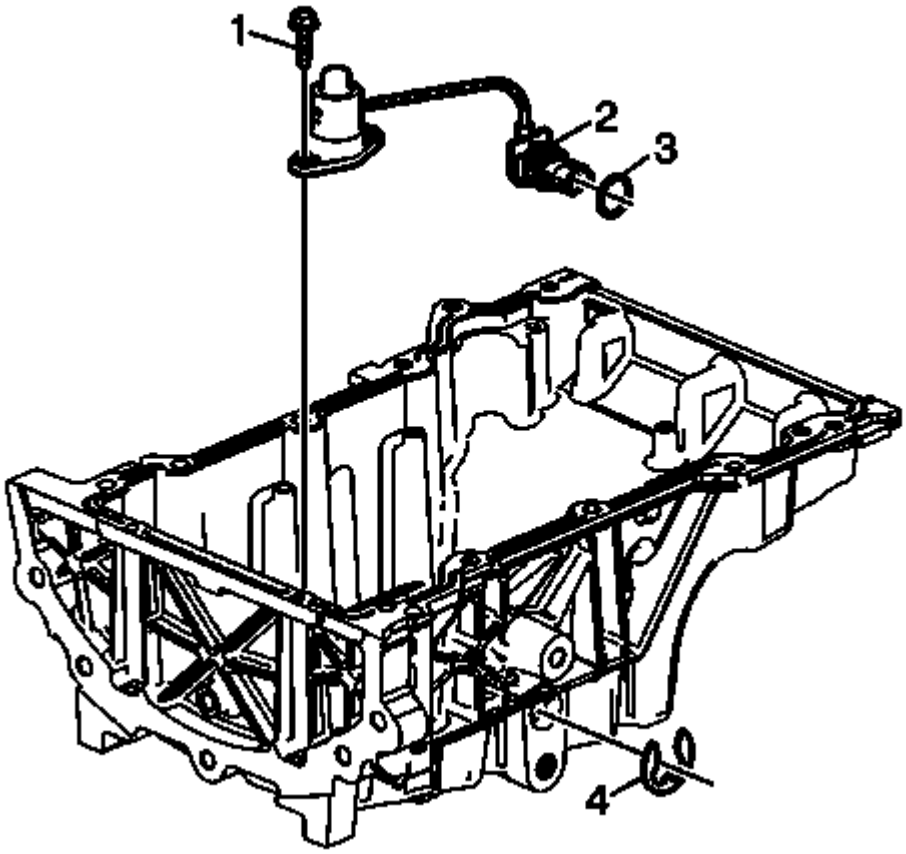

Fig. 260: Engine Oil Level Switch & Components
Courtesy of GENERAL MOTORS COMPANY

2. Install the NEW engine oil level switch seal (3).
3. Install the engine oil level switch (2).
4. Install the engine oil level switch bolts (1) and tighten to 10 N.m (89 lb in).
5. Install NEW engine oil level switch clip (4).

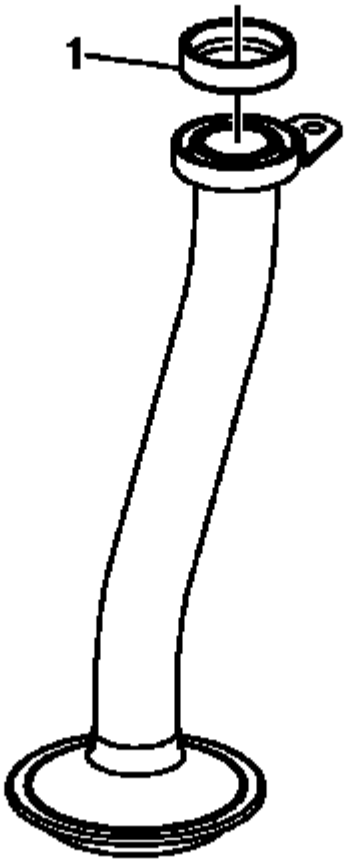

Fig. 261: Oil Suction Pipe Seal
Courtesy of GENERAL MOTORS COMPANY

6. Install the NEW oil suction pipe seal (1).

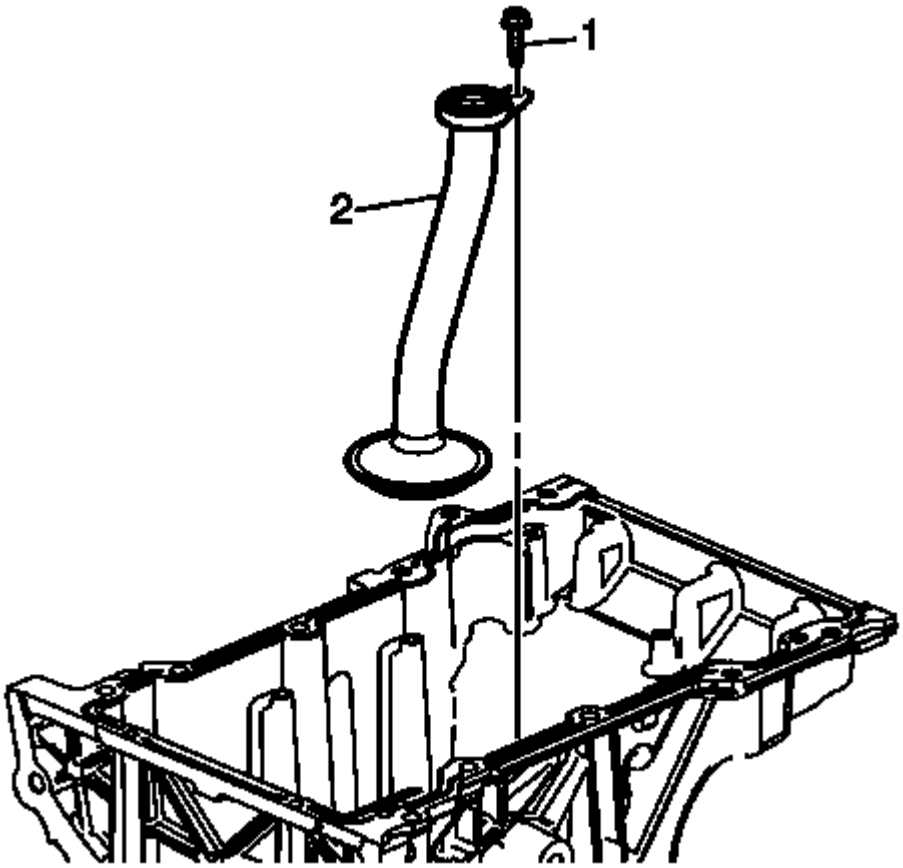

Fig. 262: Oil Suction Pipe & Bolts
Courtesy of GENERAL MOTORS COMPANY

7. Install the oil suction pipe (2).
8. Install the oil suction pipe bolts (1) and tighten to 10 N.m (89 lb in).

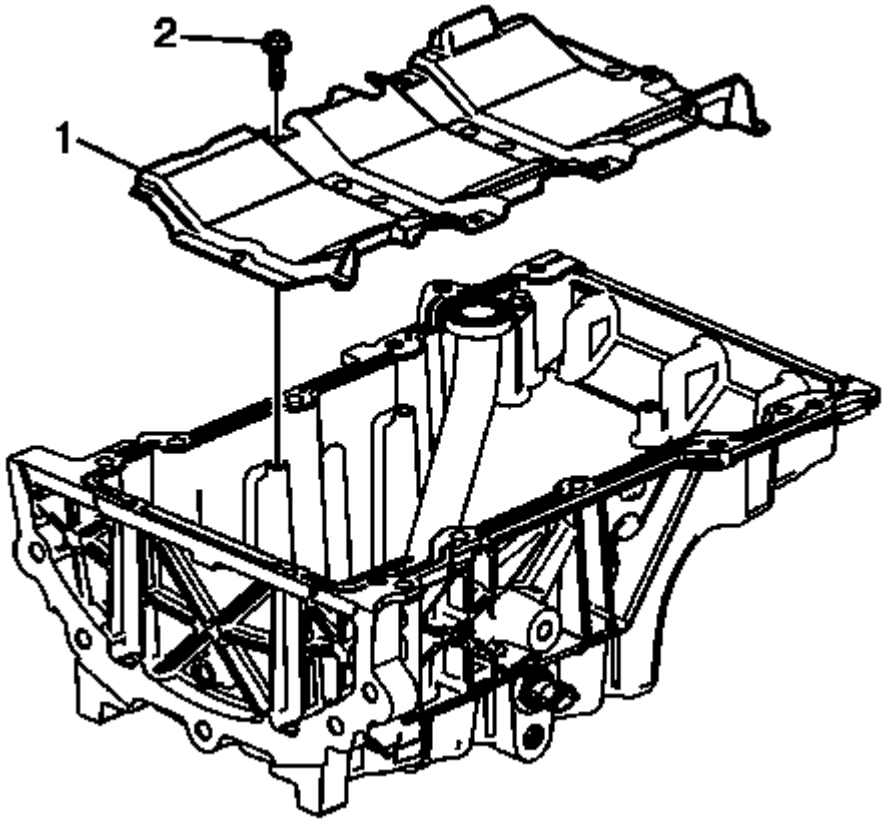

Fig. 263: Engine Oil Pan Scraper & Bolts
Courtesy of GENERAL MOTORS COMPANY

9. Install the oil pan scraper (1).
10. Install the oil pan scraper bolts (2) and tighten to 10 N.m (89 lb in).
11. Install the oil pan. Refer to **Oil Pan Replacement**.

ENGINE OIL PUMP SUCTION PIPE AND SCREEN ASSEMBLY REPLACEMENT

Removal Procedure

1. Remove the oil pan. Refer to **Oil Pan Replacement**.

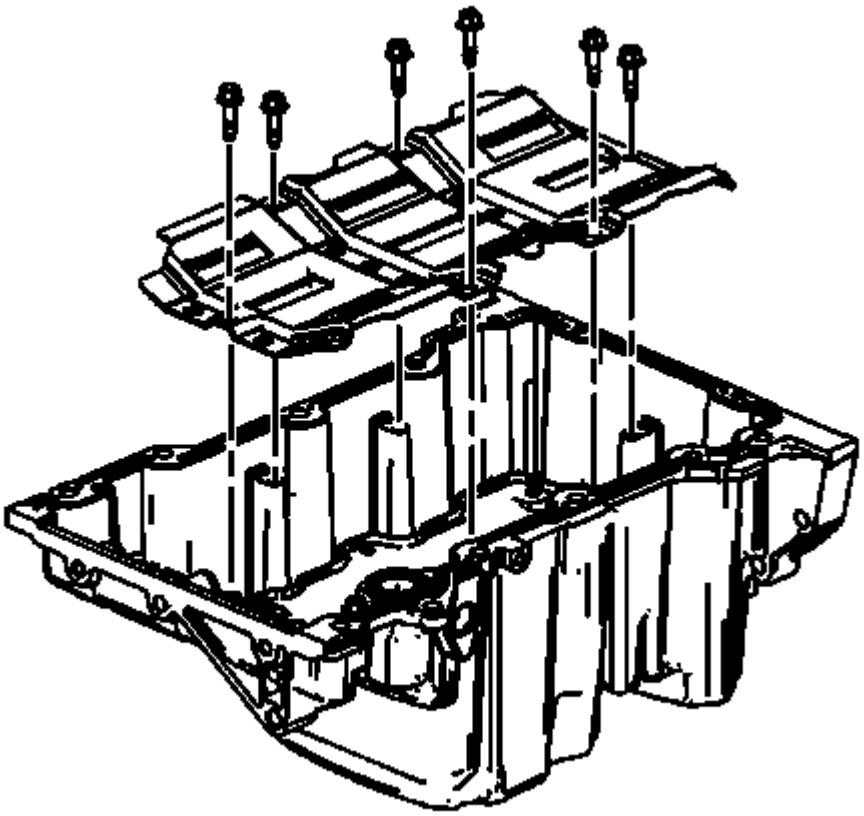

Fig. 264: View Of Oil Pan Scraper And Bolts
Courtesy of GENERAL MOTORS COMPANY

2. Remove the oil pan scraper bolts.
3. Remove the oil pan scraper.

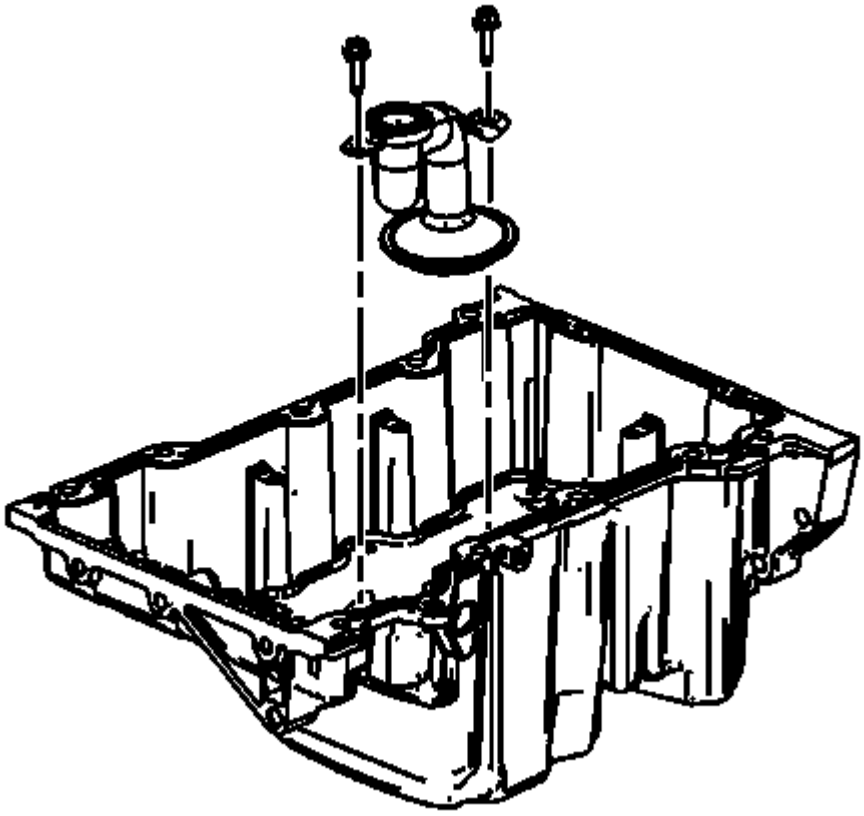

Fig. 265: View Of Oil Suction Pipe
Courtesy of GENERAL MOTORS COMPANY

4. Remove the oil suction pipe bolts.
5. Remove the oil suction pipe.

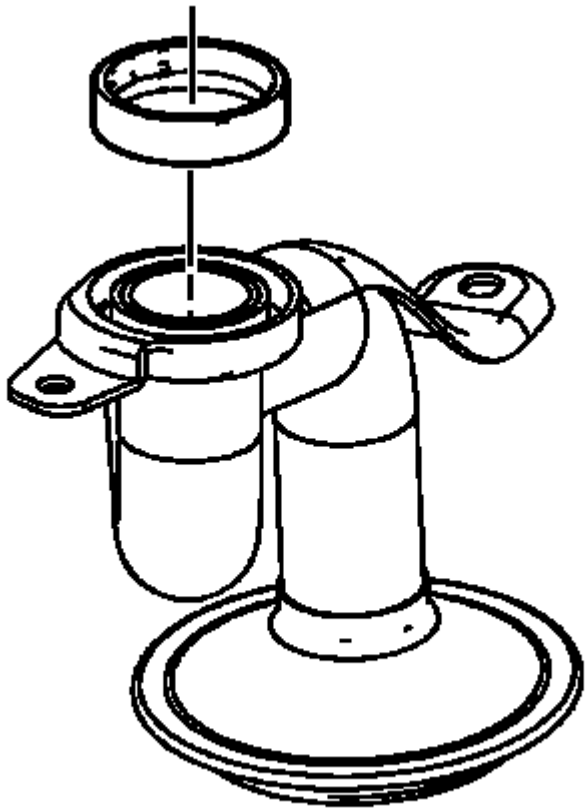

Fig. 266: View Of Oil Suction Tube Seal & Oil Suction Tube
Courtesy of GENERAL MOTORS COMPANY

6. Remove the oil suction tube seal from the oil suction tube. Discard the oil suction tube seal.

Installation Procedure

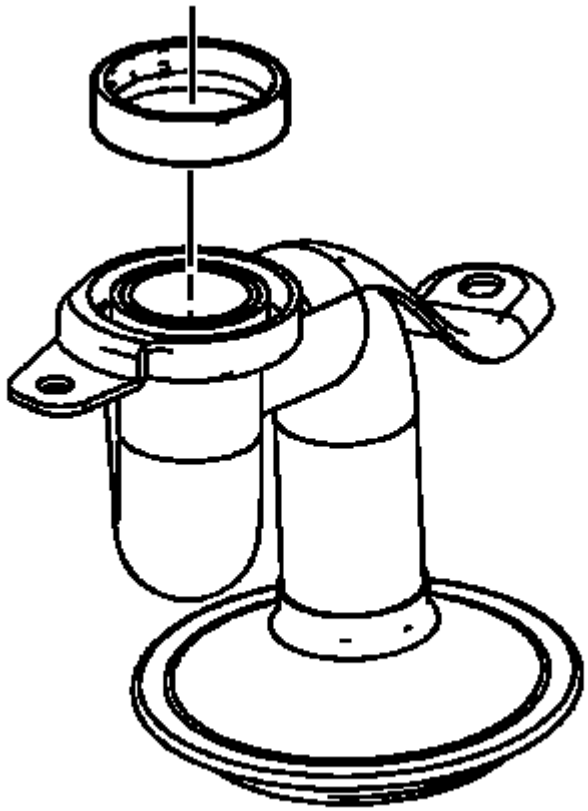

Fig. 267: View Of Oil Suction Tube Seal & Oil Suction Tube
Courtesy of GENERAL MOTORS COMPANY

1. Install a NEW oil suction tube seal onto the oil suction tube. DO NOT reuse the old oil suction tube seal.

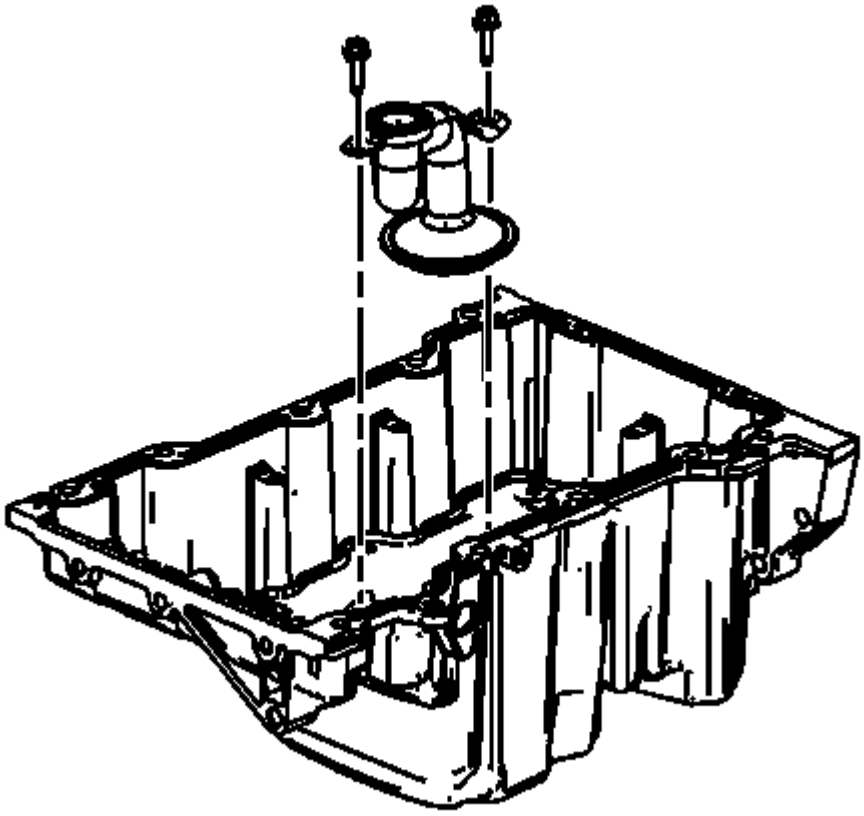

Fig. 268: View Of Oil Suction Pipe
Courtesy of GENERAL MOTORS COMPANY

2. Install the oil suction pipe.

CAUTION: Refer to Fastener Caution .

3. Install the oil suction pipe bolts and tighten to 10 N.m (89 lb in).

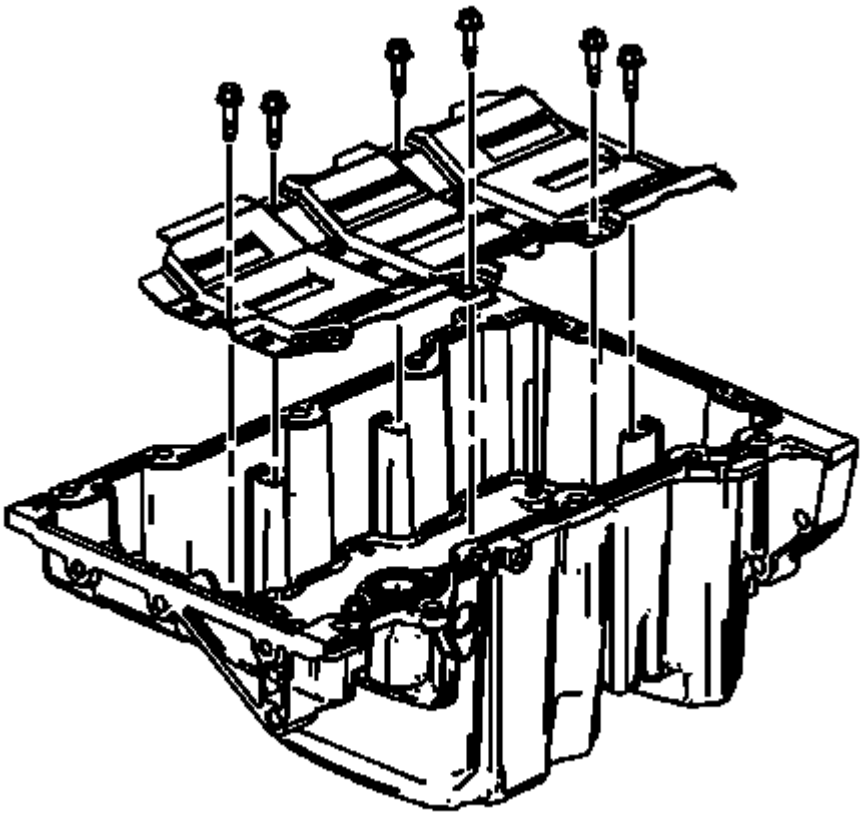

Fig. 269: View Of Oil Pan Scraper And Bolts
Courtesy of GENERAL MOTORS COMPANY

4. Install the oil pan scraper.
5. Install the oil pan scraper bolts and tighten to 10 N.m (89 lb in).
6. Install the oil pan. Refer to **Oil Pan Replacement**.

ENGINE REPLACEMENT

Special Tools

J-38185 Hose Clamp Pliers

For equivalent regional tools, refer to **Special Tools** .

Removal Procedure

1. Disconnect the negative battery cable. Refer to **Battery Negative Cable Disconnection and Connection** .
2. Remove the intake manifold cover. Refer to **Intake Manifold Cover Replacement - Rear**.

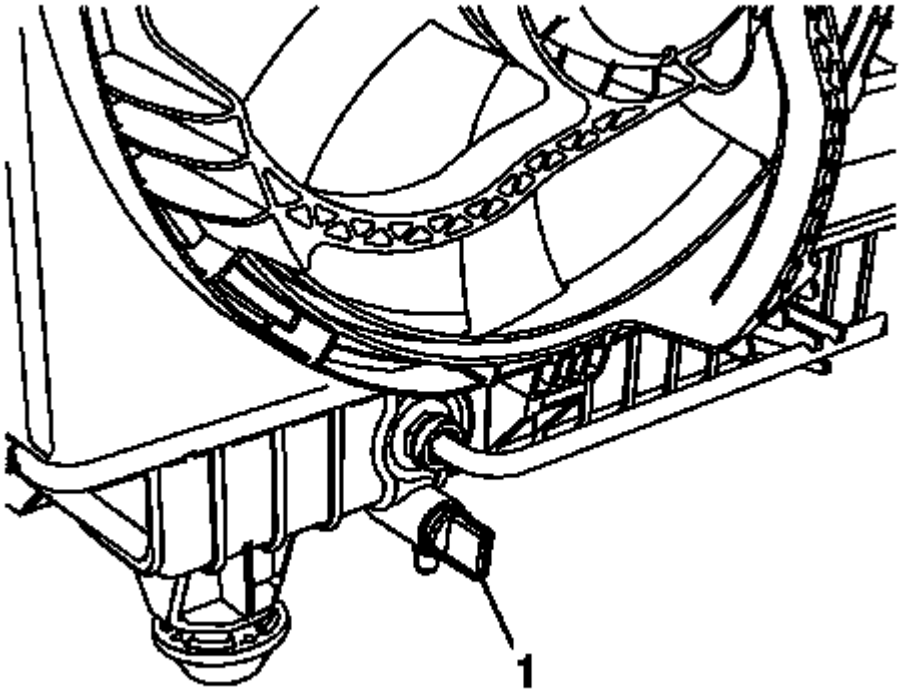

Fig. 270: Radiator Drain Cock
Courtesy of GENERAL MOTORS COMPANY

3. Place a clean drain pan under the radiator drain cock.
4. Loosen the radiator drain cock (1).
5. Drain the cooling system. Refer to **Cooling System Draining and Filling (LFX, Static Fill)** , **Cooling System Draining and Filling (GE 47716)** .
6. Tighten the radiator drain cock (1).
7. Relieve the high side fuel system pressure. Refer to **Fuel Pressure Relief** .
8. Discharge the air conditioning (A/C) system. Refer to **Refrigerant Recovery and Recharging (Belt Driven Compressor)** .
9. Remove the front tires. Refer to **Tire and Wheel Removal and Installation (Without RT2)** , **Tire and Wheel Removal and Installation (With RT2)** .
10. Remove the transmission. Refer to the appropriate procedure:
    - **Transmission Replacement** for the 6L45/6L50/6L80/6L90 transmission
    - **Transmission Replacement** for the Aisin AY6 transmission
    - **Transmission Replacement** for the Tremec 6-speed transmission

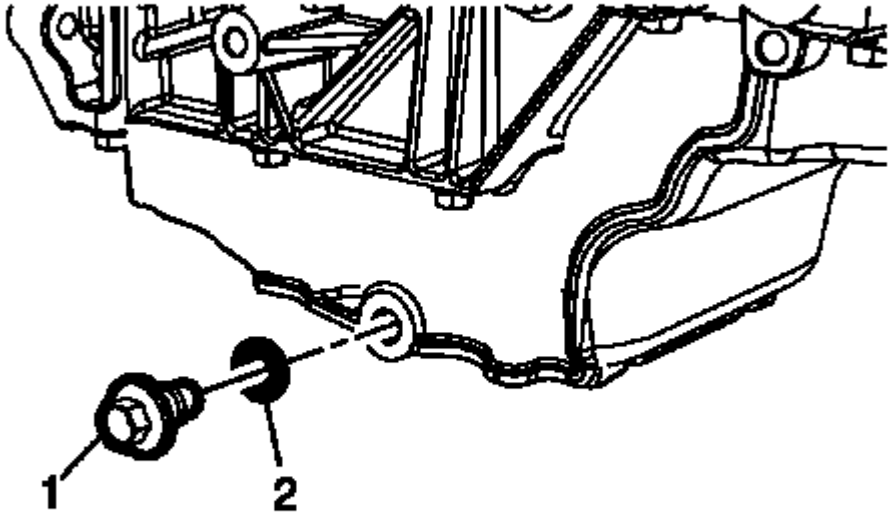

Fig. 271: Oil Drain Plug & O-Ring Seal
Courtesy of GENERAL MOTORS COMPANY

11. Remove the oil pan drain plug (1) from the oil pan allow the oil to drain completely. Refer to **Engine Oil and Oil Filter Replacement**.
12. Install the oil pan drain plug (1) and NEW O-ring seal (2) and tighten to 20 N.m (15 lb ft).
13. Remove the air cleaner outlet duct hose. Refer to **Air Cleaner Outlet Duct Replacement** .
14. Remove the air cleaner assembly. Refer to **Air Cleaner Assembly Replacement** .

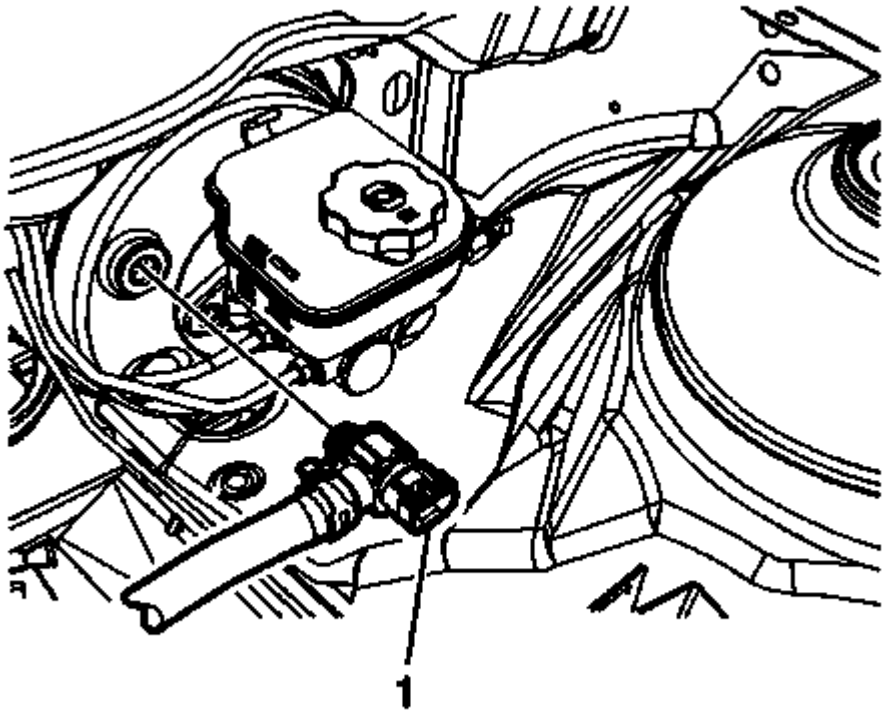

Fig. 272: Check Valve (LFX)
Courtesy of GENERAL MOTORS COMPANY

15. Disconnect the power brake booster vacuum sensor electrical connector.
16. Remove the check valve (1) from the vacuum brake booster.

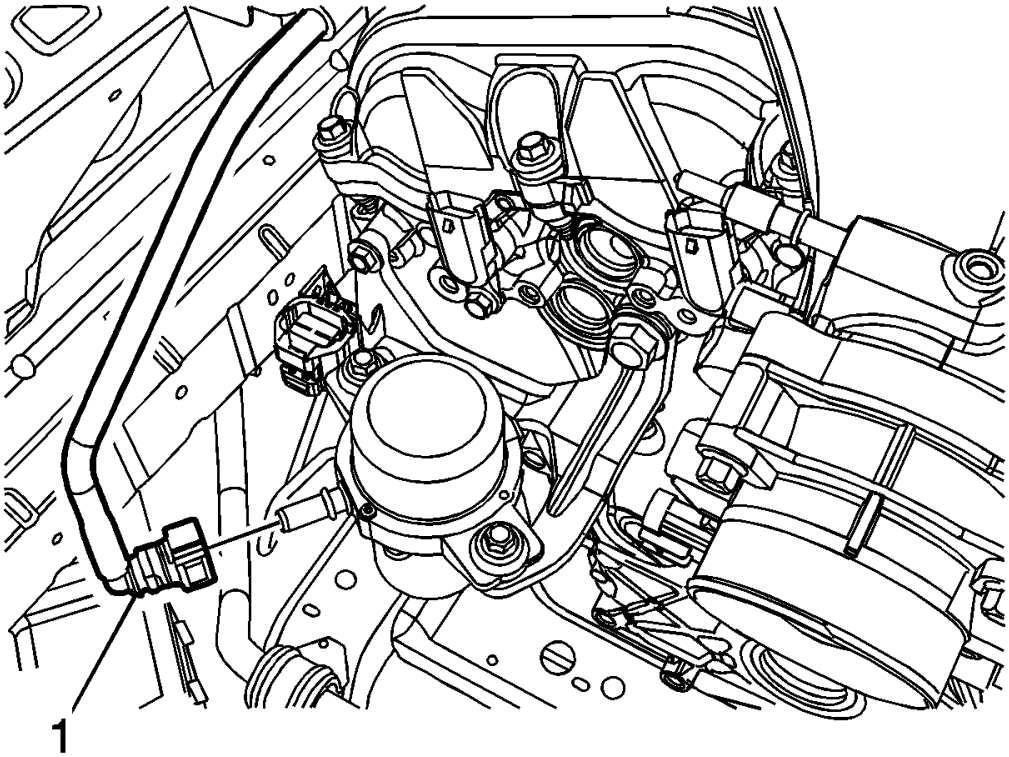

Fig. 273: Power Brake Booster Vacuum Hose Quick Connect At Power Brake Booster Vacuum Pump (LFX)
Courtesy of GENERAL MOTORS COMPANY

17. Release the power brake booster vacuum hose quick connect (1) from the power brake booster vacuum pump and reposition.

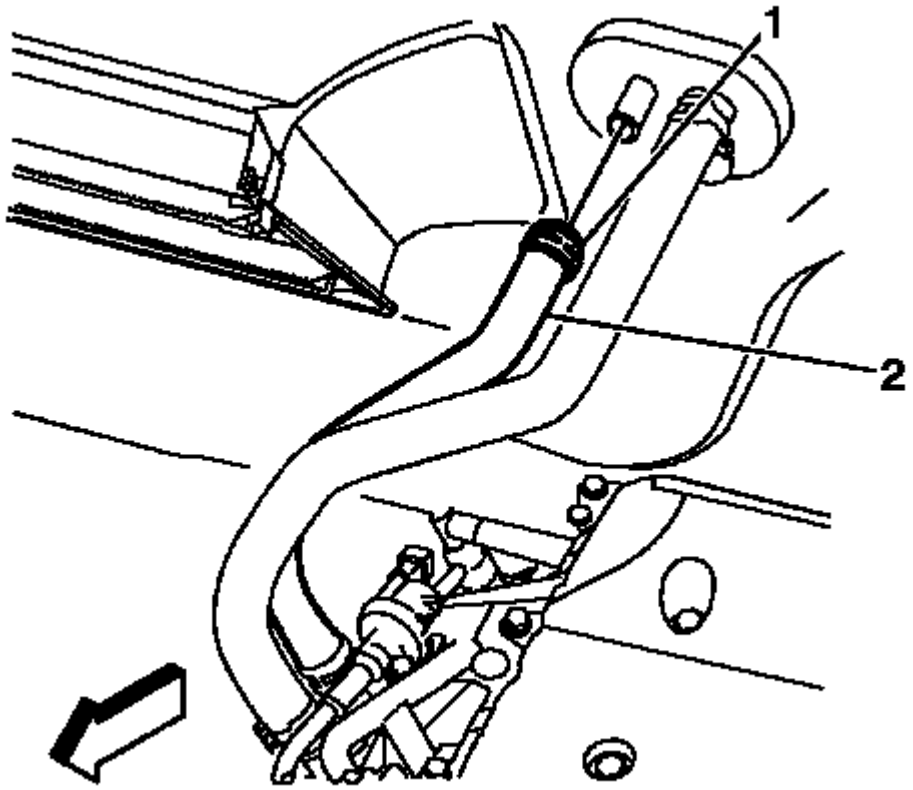

Fig. 274: Heater Outlet Hose & Clamp At Heater Core
Courtesy of GENERAL MOTORS COMPANY

18. Disengage tension on the heater outlet hose clamp (1) at the heater core using **J-38185** pliers.
19. Remove the heater outlet hose (2) from the heater core and reposition.

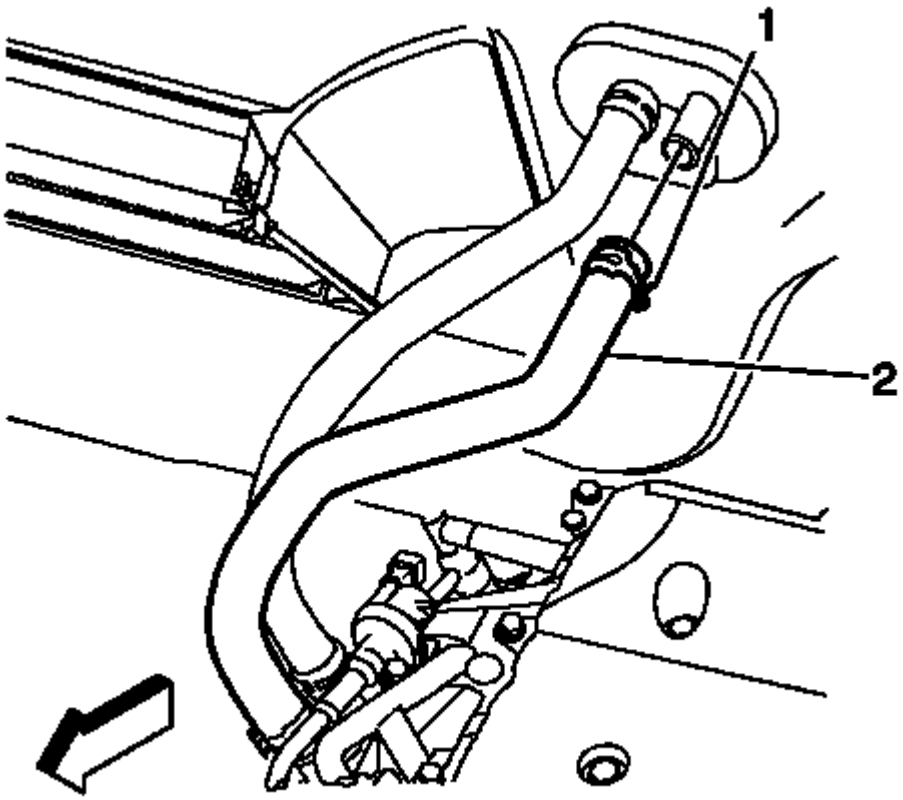

Fig. 275: Heater Inlet Hose & Clamp At Heater Core
Courtesy of GENERAL MOTORS COMPANY

20. Disengage tension on the heater inlet hose clamp (1) at the heater core using **J-38185** pliers.
21. Remove the heater inlet hose (2) from the heater core and reposition.

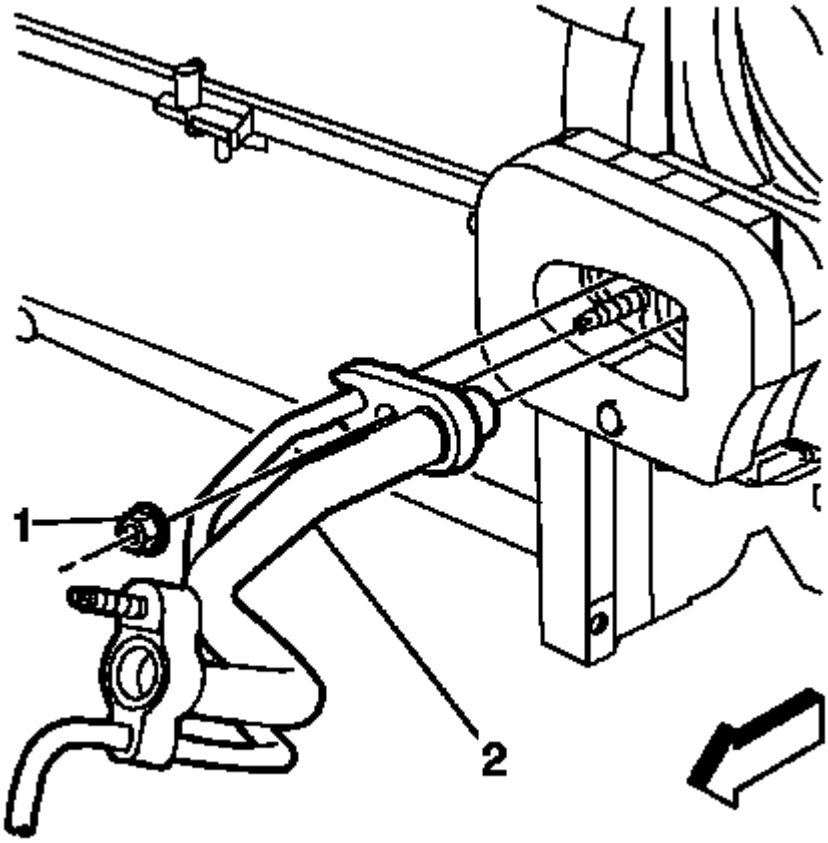

Fig. 276: A/C Evaporator Thermal Expansion Valve Tube & Nut At HVAC Module
Courtesy of GENERAL MOTORS COMPANY

NOTE: **Cap or tape off the open A/C components immediately to prevent system contamination.**

22. Remove A/C evaporator thermal expansion valve tube nut (1).
23. Remove A/C evaporator thermal expansion valve tube (2) from HVAC module reposition.

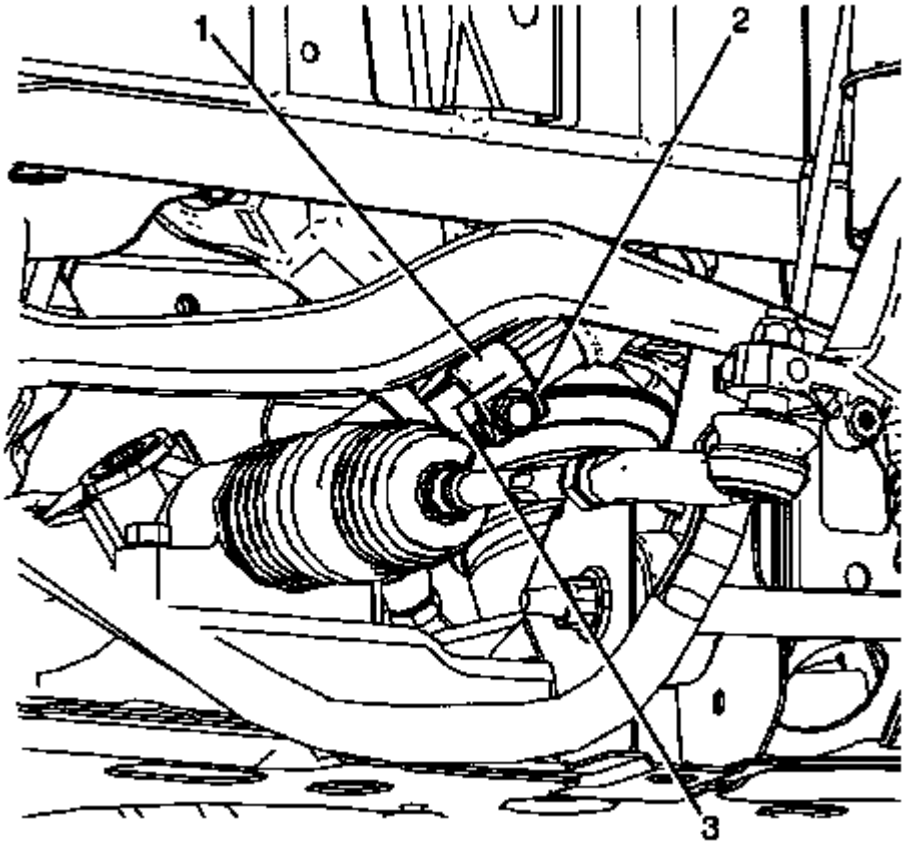

Fig. 277: Identifying Intermediate Steering Shaft To Pinion Shaft Retaining Bolt
Courtesy of GENERAL MOTORS COMPANY

24. Working under the vehicle, use paint in order to place match marks on the intermediate steering shaft (1) and on the steering gear pinion shaft (3).
25. Remove the steering gear pinion bolt (2).
26. Remove the thread locking patch and clean the threads on the steering gear pinion bolt.
27. Disconnect the intermediate steering shaft from the steering gear pinion shaft.
28. Raise and support the vehicle. Refer to **Lifting and Jacking the Vehicle** .

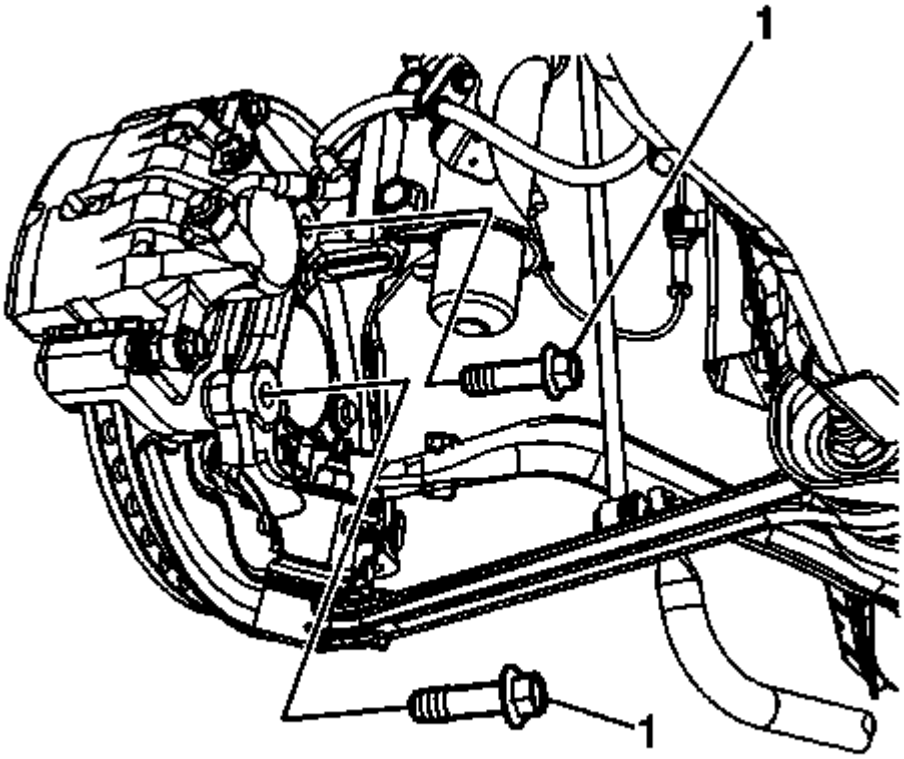

Fig. 278: Disc Brake Caliper Bracket Bolts
Courtesy of GENERAL MOTORS COMPANY

NOTE: The disc brake caliper bracket bolts must be replaced any time they are removed. Do not reuse the disc brake caliper bracket bolts.

29. Remove and discard the disc brake caliper bracket bolts (1).

CAUTION: Support the brake caliper with heavy mechanic wire, or equivalent, whenever it is separated from its mount and the hydraulic flexible brake hose is still connected. Failure to support the caliper in this manner will cause the flexible brake hose to bear the weight of the caliper, which may cause damage to the brake hose and in turn may cause a brake fluid leak.

30. Remove the disc brake caliper and bracket assembly and support with heavy mechanics wire or equivalent.

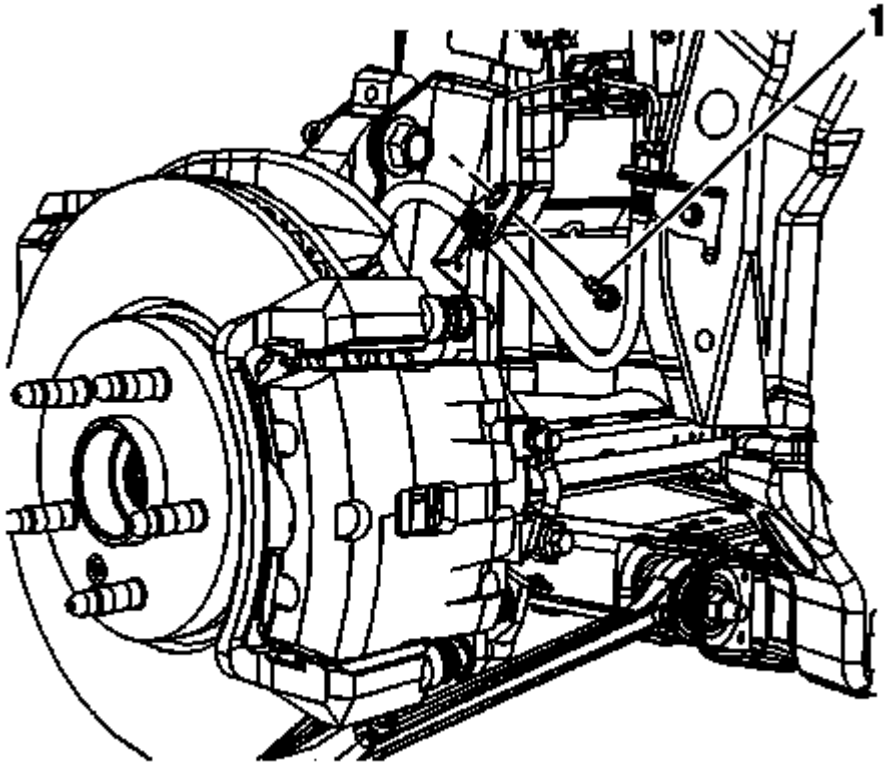

Fig. 279: Strut Assembly Brake Hose Bracket Bolt
Courtesy of GENERAL MOTORS COMPANY

31. Remove the brake hose bracket bolt (1) from the strut assembly.

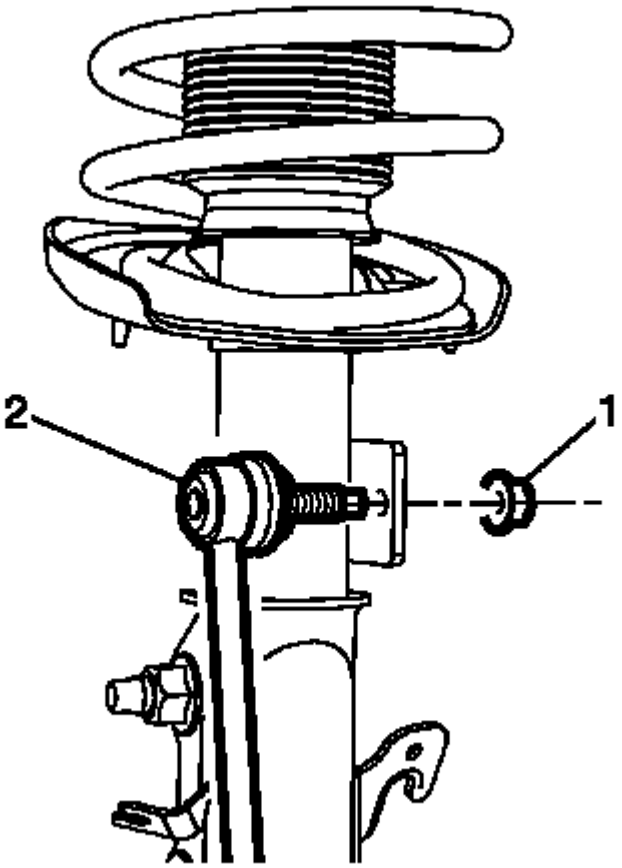

Fig. 280: Stabilizer Link & Front Stabilizer Shaft Nut
Courtesy of GENERAL MOTORS COMPANY

NOTE: After the nut has been removed, discard and replace with NEW.

32. Remove the front stabilizer shaft nut (1) and discard the old nut.
33. Reposition the stabilizer link (2).

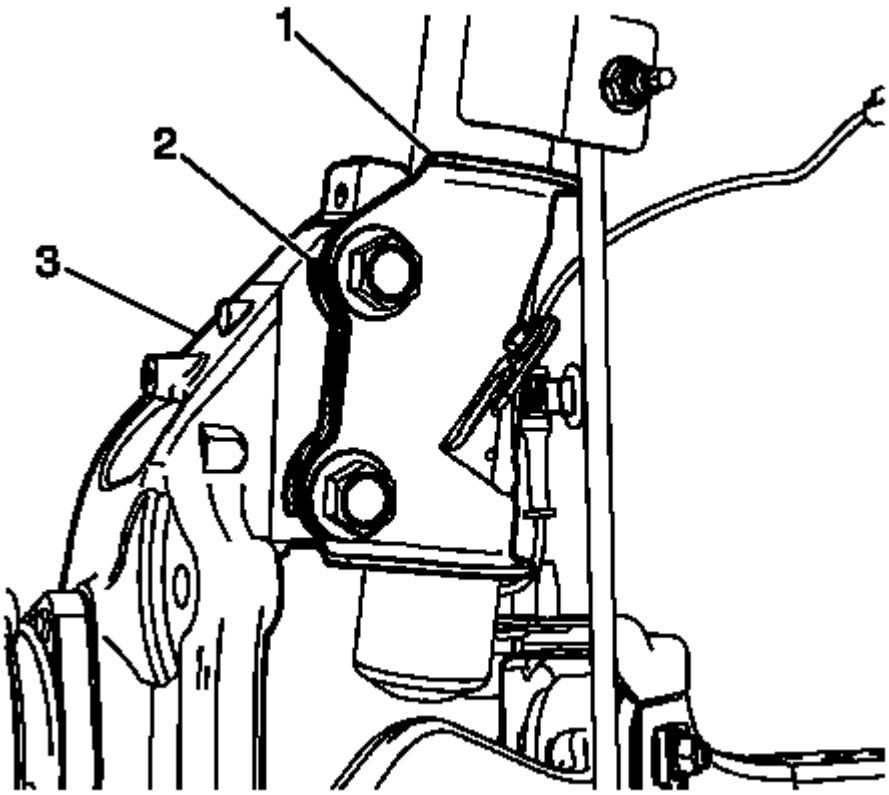

Fig. 281: Mark On Steering Knuckle & Strut Assembly
Courtesy of GENERAL MOTORS COMPANY

34. Paint a reference mark (2) of the strut (1) to the steering knuckle (3).

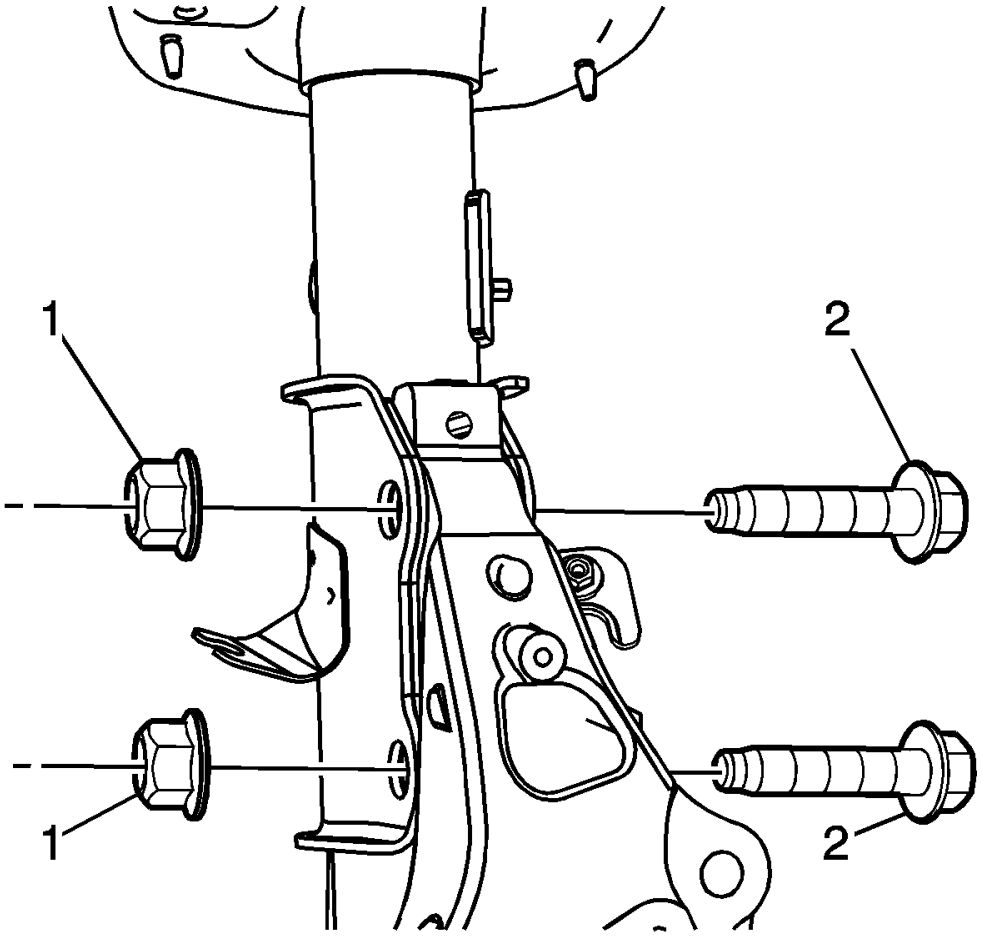

Fig. 282: Front Strut Nuts & Bolts
Courtesy of GENERAL MOTORS COMPANY

35. Remove the front strut nuts (1) and the bolts (2).

NOTE: **Adjust the hydraulic floor jack so that the front strut has a small amount of pressure on it.**

36. Using a hydraulic floor jack, support the steering knuckle.
37. Disconnect all necessary engine harness electrical connectors. Refer to **Powertrain Component Views** .
38. Remove the front bumper fascia. Refer to **Front Bumper Fascia Replacement (Base, RS, SS)** , **Front Bumper Fascia Replacement (ZL1)** .
39. Convertible vehicle, remove the front end lower structure brace.

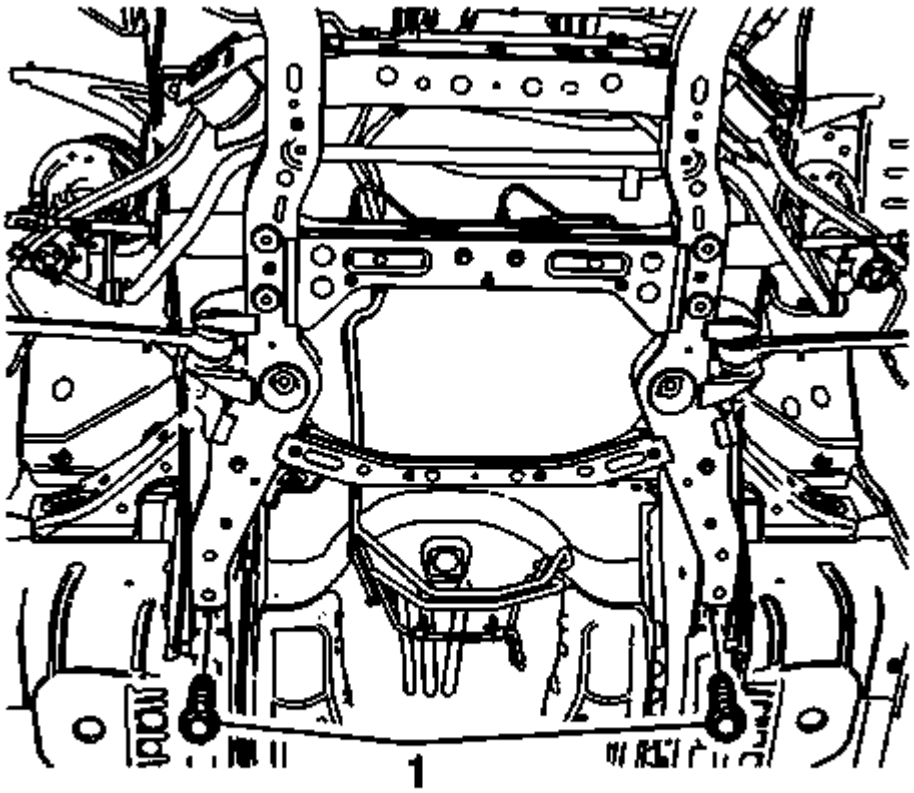

Fig. 283: Rear Frame Bolts
Courtesy of GENERAL MOTORS COMPANY

40. Remove the rear frame bolts (1).
41. Using a suitable engine support table or equivalent, lower the vehicle until the drivetrain and front suspension frame contacts the engine support table.

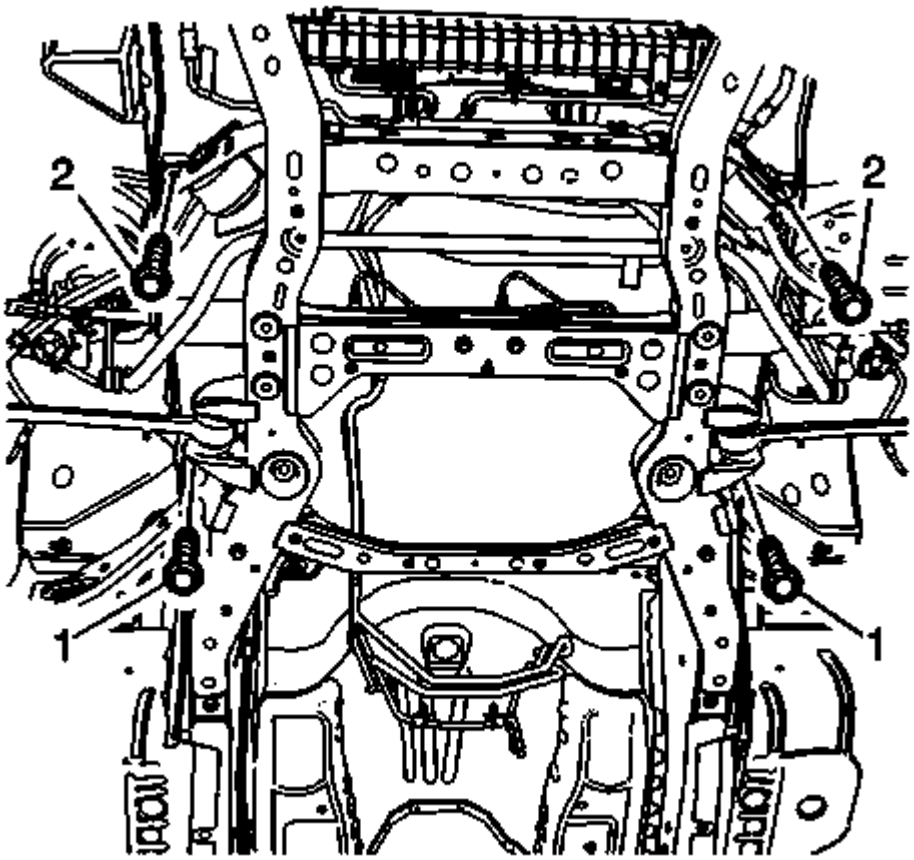

Fig. 284: Front And Rear Frame Bolts
Courtesy of GENERAL MOTORS COMPANY

42. Remove the front (2) and rear (1) frame bolts.
43. Lower the frame with the engine until clear the body and raise the vehicle at full height.

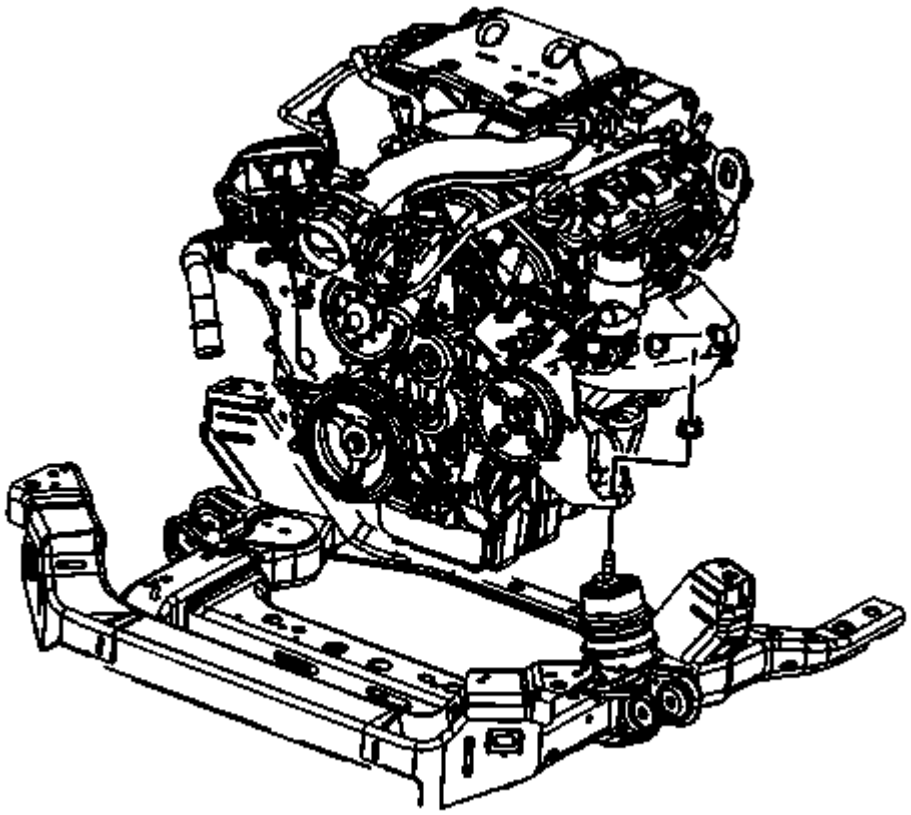

Fig. 285: Engine Mount Nuts
Courtesy of GENERAL MOTORS COMPANY

44. Remove the engine mount nuts and remove the engine from the crossmember.
45. Transfer components as required. Refer to the appropriate procedures.

Installation Procedure

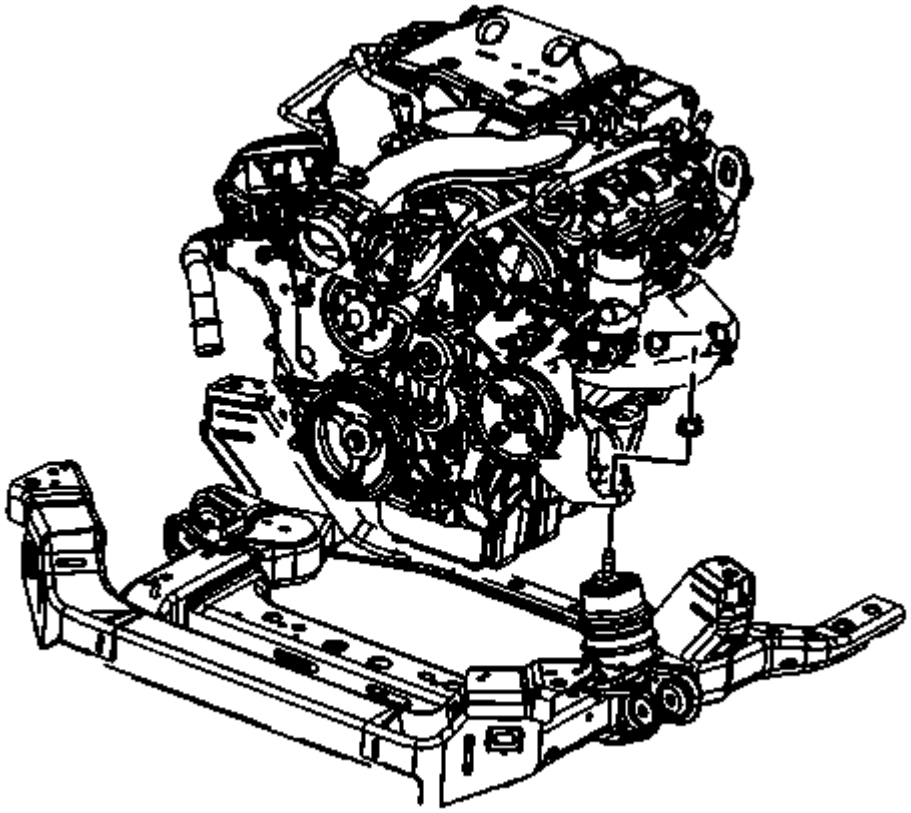

Fig. 286: Engine Mount Nuts
Courtesy of GENERAL MOTORS COMPANY

1. Install the engine to the crossmember.
2. Tighten both the engine mount nuts to 80 N.m (59 lb ft).

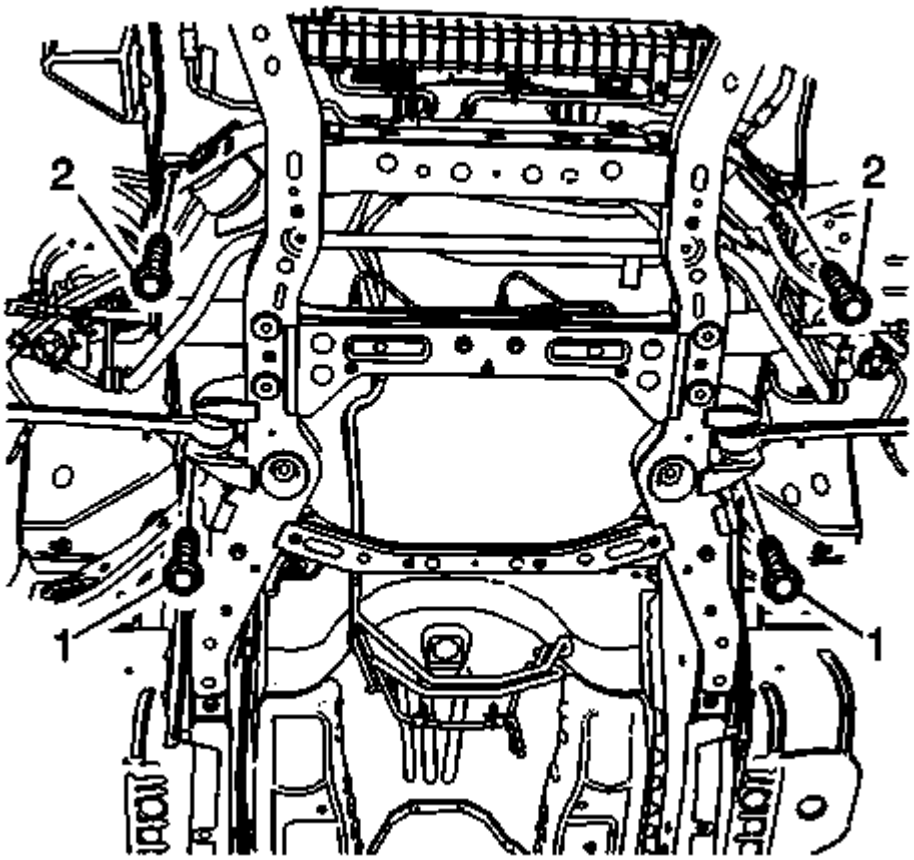

Fig. 287: Front And Rear Frame Bolts
Courtesy of GENERAL MOTORS COMPANY

CAUTION: Refer to Fastener Caution .

3. Install the front frame mountings bolts (2) and tighten to 160 N.m (118 lb ft).
4. Install the front frame mountings bolts (1) and tighten to 160 N.m (118 lb ft).

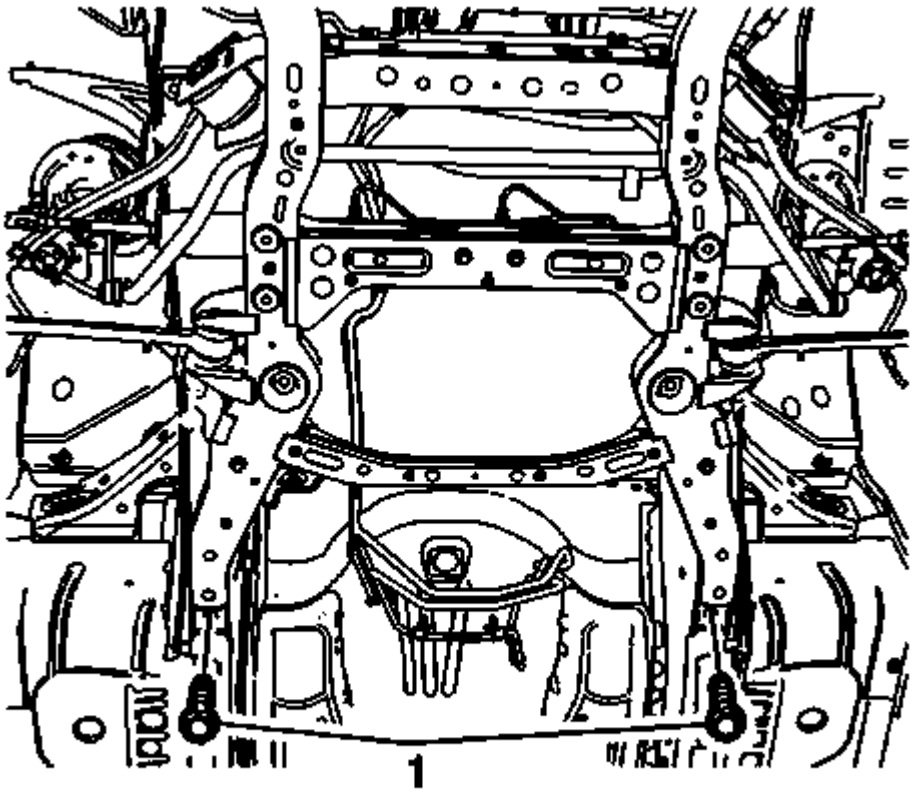

Fig. 288: Rear Frame Bolts
Courtesy of GENERAL MOTORS COMPANY

5. Install the rear frame mountings bolts (1) and tighten to 240 N.m (177 lb ft).
6. Convertible vehicle, install the front end lower structure brace.
7. Install the front bumper fascia. Refer to **Front Bumper Fascia Replacement (Base, RS, SS)** , **Front Bumper Fascia Replacement (ZL1)** .
8. Connect all necessary engine harness electrical connectors. Refer to **Powertrain Component Views** , and **Harness Routing Views** .

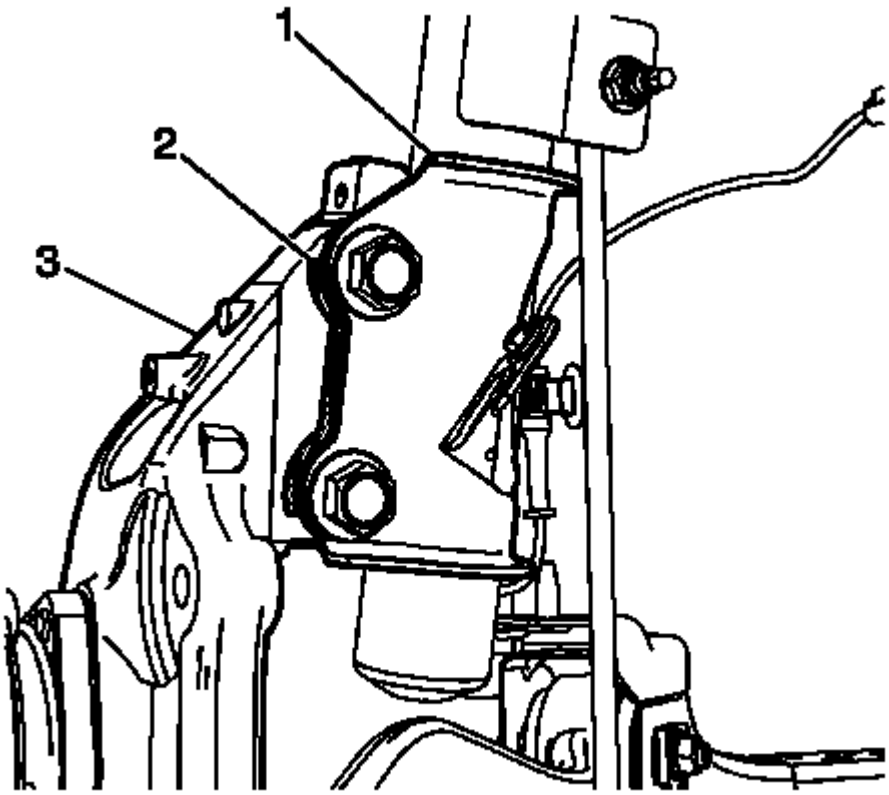

Fig. 289: Mark On Steering Knuckle & Strut Assembly
Courtesy of GENERAL MOTORS COMPANY

9. Align the front strut (1) with the alignment mark (2).

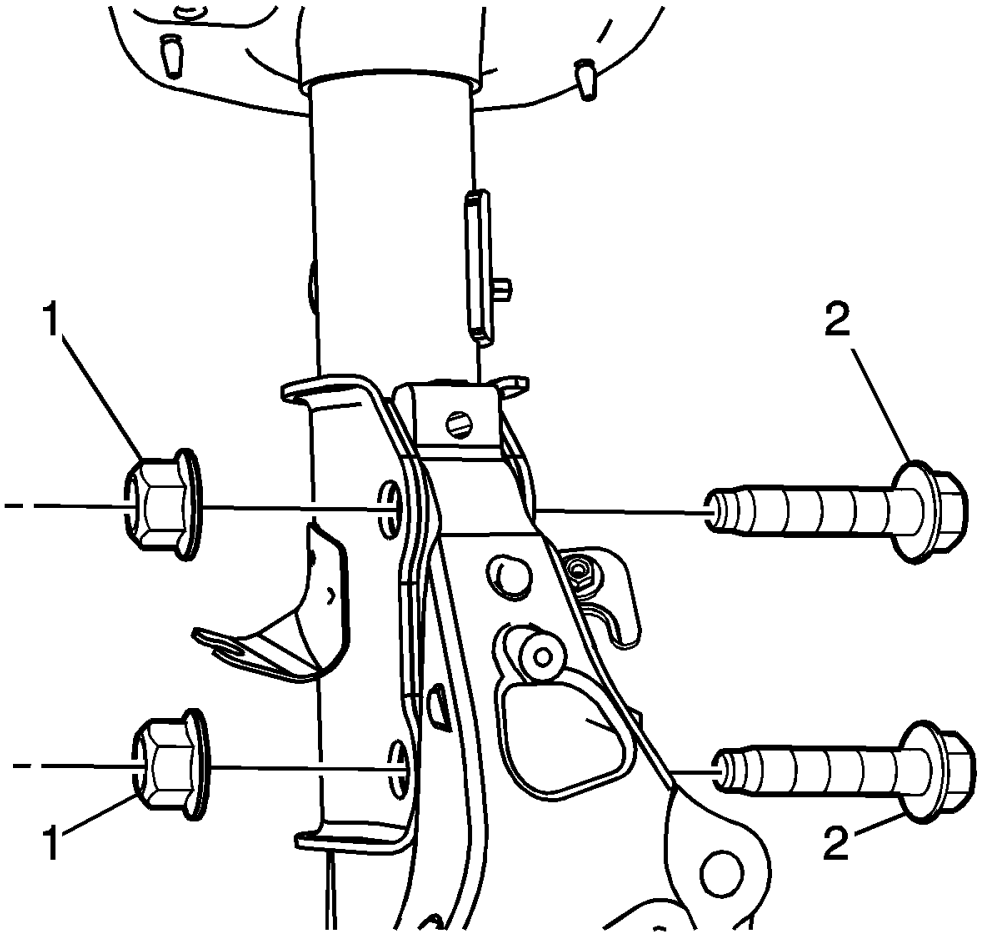

Fig. 290: Front Strut Nuts & Bolts
Courtesy of GENERAL MOTORS COMPANY

10. Install the front strut bolts (2).
11. Install the nuts (1) and tighten to 80 N.m (59 lb ft) plus an additional 180 degrees.

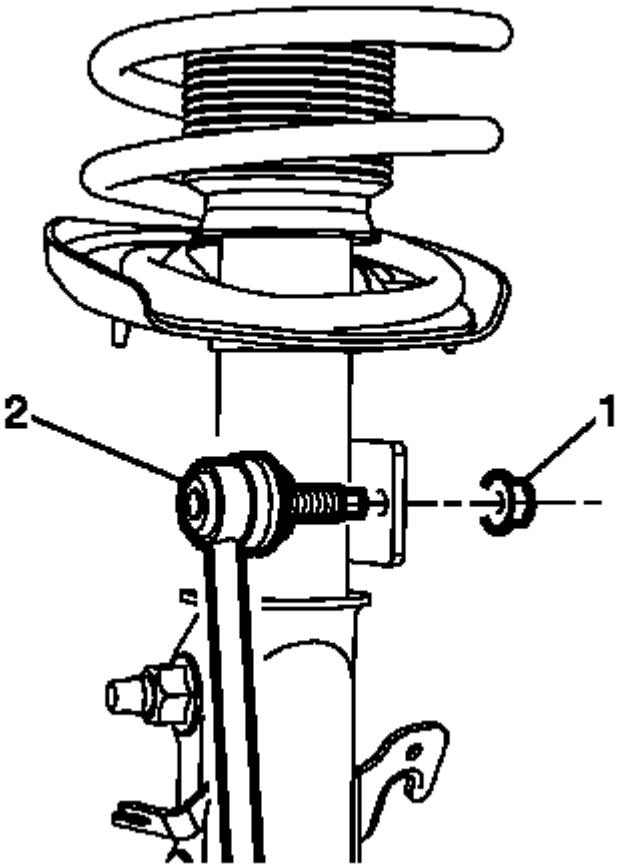

Fig. 291: Stabilizer Link & Front Stabilizer Shaft Nut
Courtesy of GENERAL MOTORS COMPANY

12. Install the front stabilizer shaft nut (1) and tighten to 49 N.m (36 lb ft).

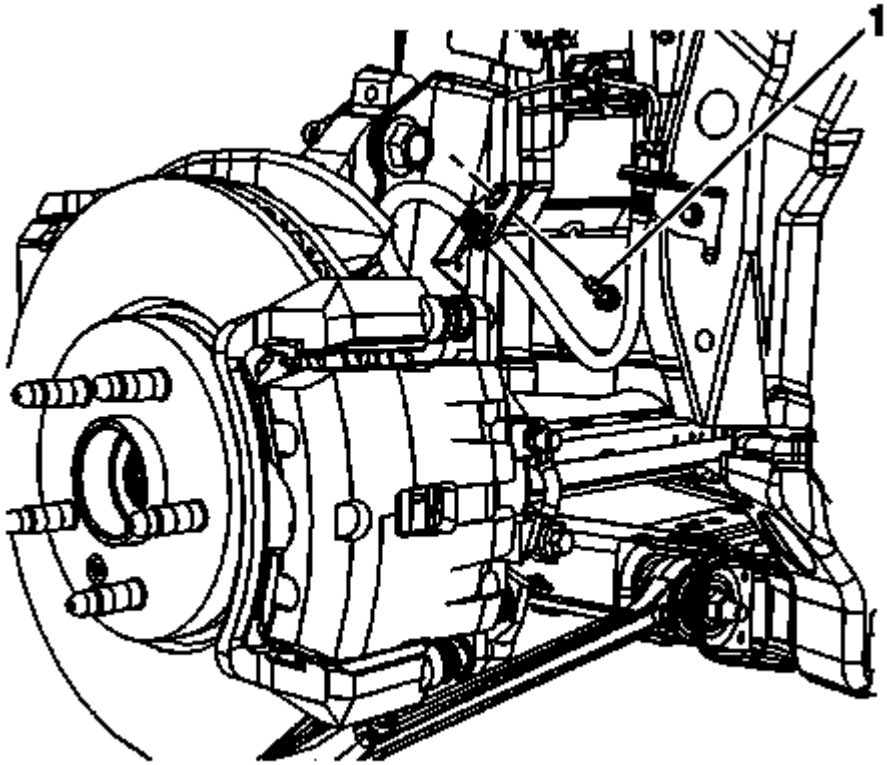

Fig. 292: Strut Assembly Brake Hose Bracket Bolt
Courtesy of GENERAL MOTORS COMPANY

13. Install the brake hose bracket bolt (1) on the strut assembly and tighten to 9 N.m (80 lb in).

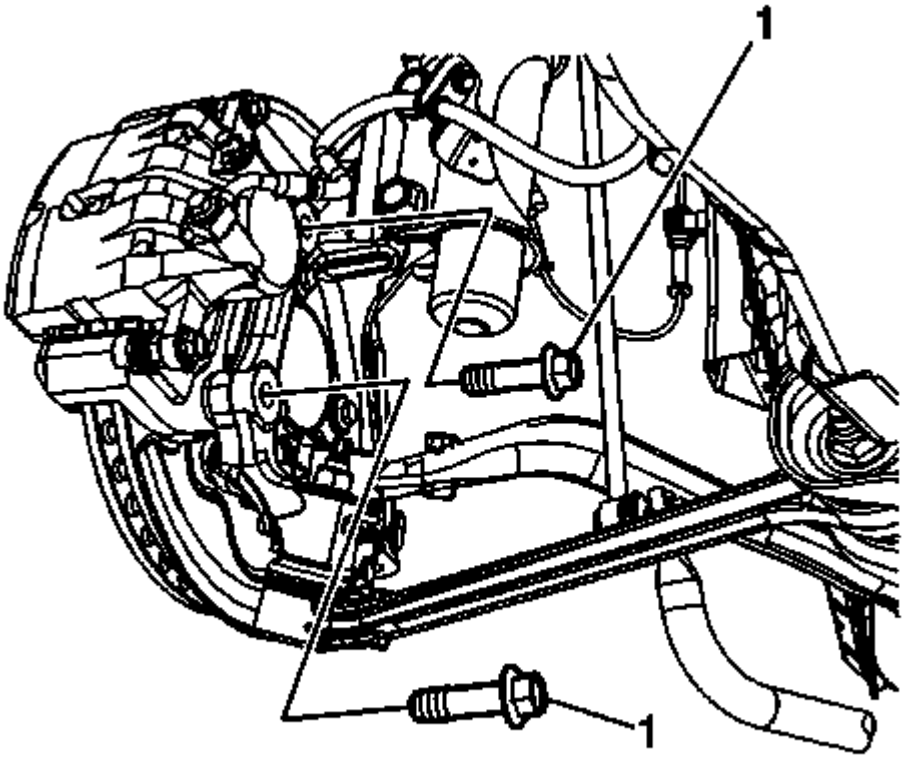

Fig. 293: Disc Brake Caliper Bracket Bolts
Courtesy of GENERAL MOTORS COMPANY

NOTE: Install new disc brake caliper bracket bolts any time the bolts are removed.

14. Install 2 new disc brake caliper bracket bolts (1) and tighten to 60 N.m (44 lb ft) plus 90 degrees.

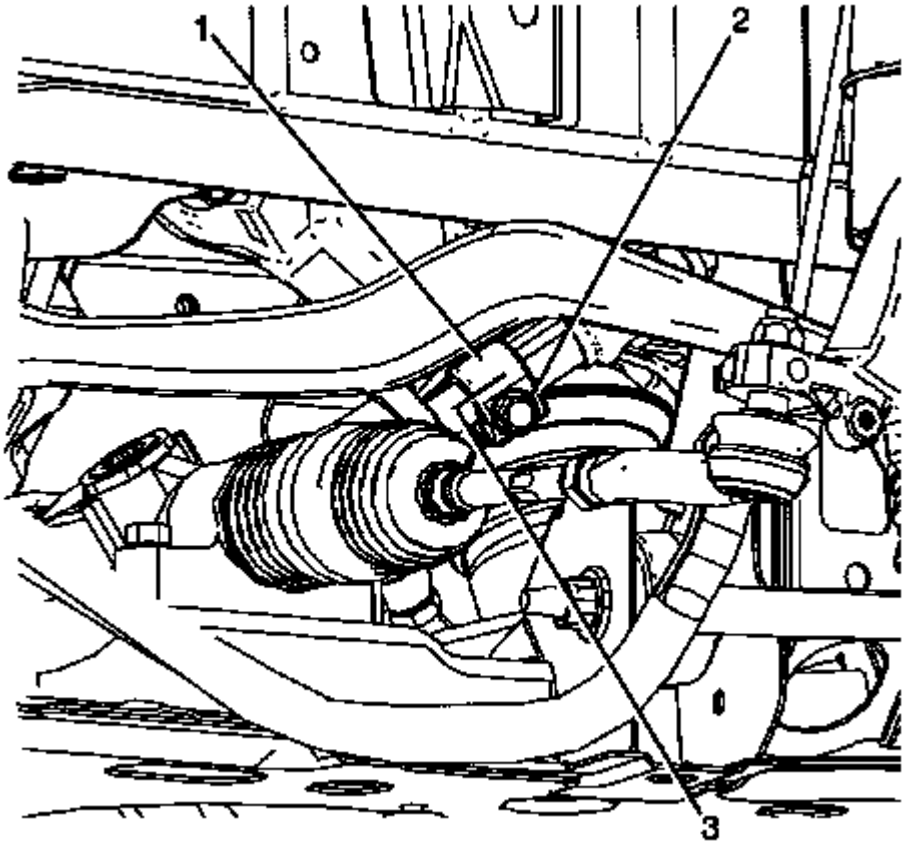

Fig. 294: Identifying Intermediate Steering Shaft To Pinion Shaft Retaining Bolt
Courtesy of GENERAL MOTORS COMPANY

15. Working under the vehicle, align the match marks and connect the intermediate steering shaft (1) to the steering gear pinion shaft (3).
16. Apply thread locking adhesive to the steering gear pinion bolt (2). Refer to **Adhesives, Fluids, Lubricants, and Sealers** , **Adhesives, Fluids, Lubricants, and Sealers (Korea)** .
17. Install the steering gear pinion bolt and tighten to 50 N.m (37 lb ft).

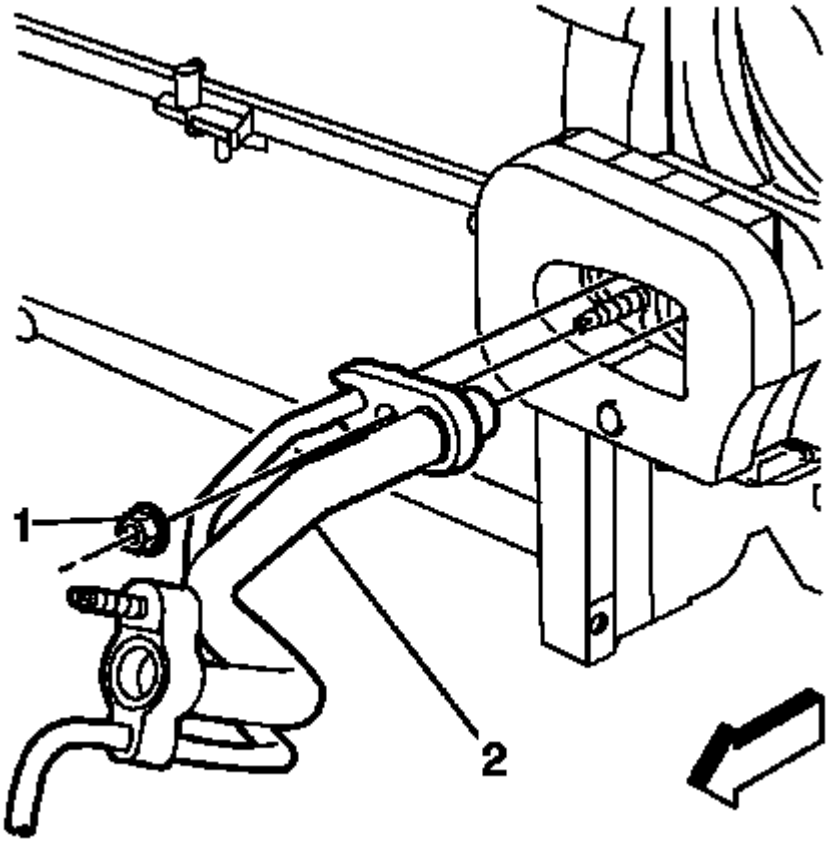

Fig. 295: A/C Evaporator Thermal Expansion Valve Tube & Nut At HVAC Module
Courtesy of GENERAL MOTORS COMPANY

18. Install A/C evaporator thermal expansion valve tube (2) to thermal expansion valve tube.
19. Install A/C evaporator thermal expansion valve tube nut (1) and tighten to 19 N.m (14 lb ft)

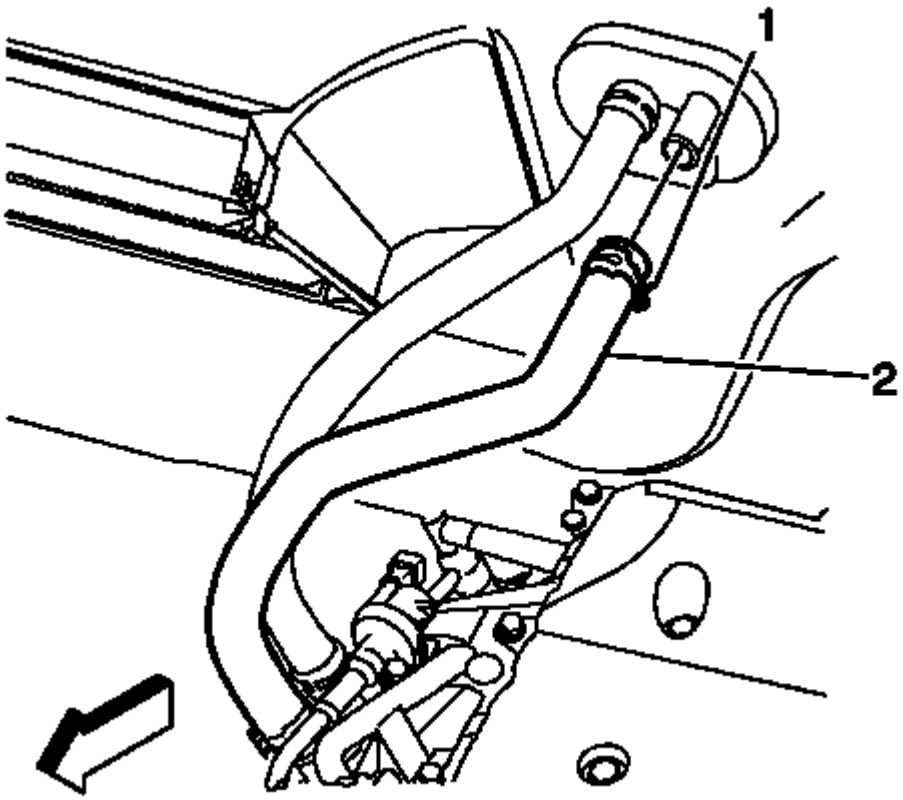

Fig. 296: Heater Inlet Hose & Clamp At Heater Core
Courtesy of GENERAL MOTORS COMPANY

NOTE: Lubricate the inside diameters of the hose with clean coolant prior to installation.

20. Install the heater inlet hose (2) to the heater core.
21. Engage tension on the heater inlet hose clamp (1) at the radiator using **J-38185** pliers.

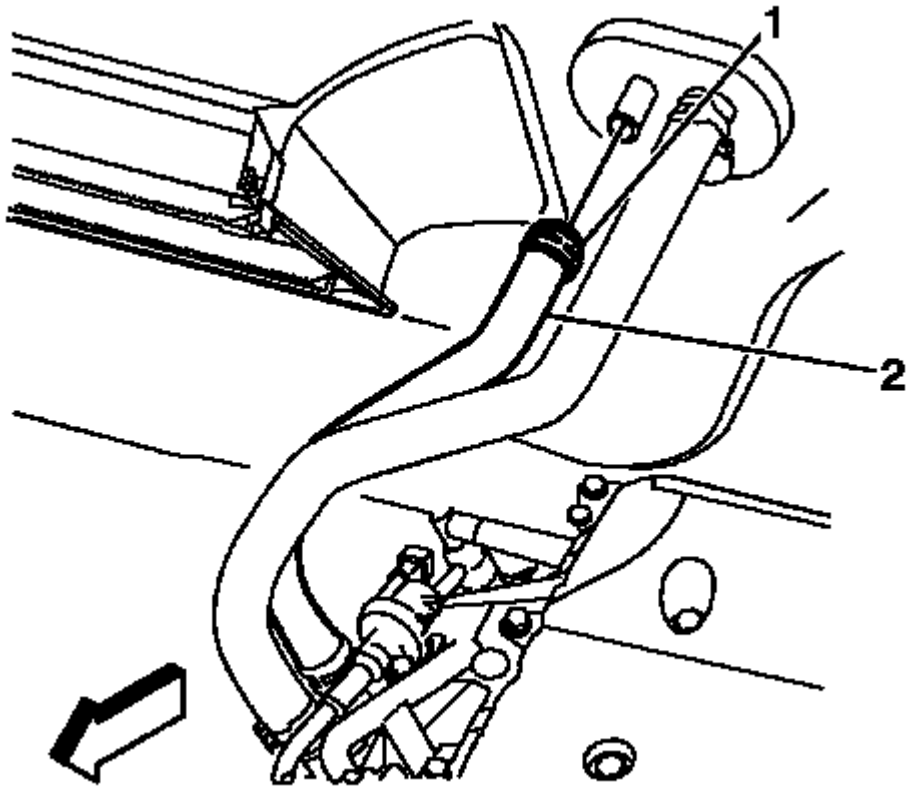

Fig. 297: Heater Outlet Hose & Clamp At Heater Core
Courtesy of GENERAL MOTORS COMPANY

NOTE: Lubricate the inside diameters of the hose with clean coolant prior to installation.

22. Install the heater outlet hose (2) to the heater core.
23. Engage tension on the heater outlet hose clamp (1) at the radiator using **J-38185** pliers.

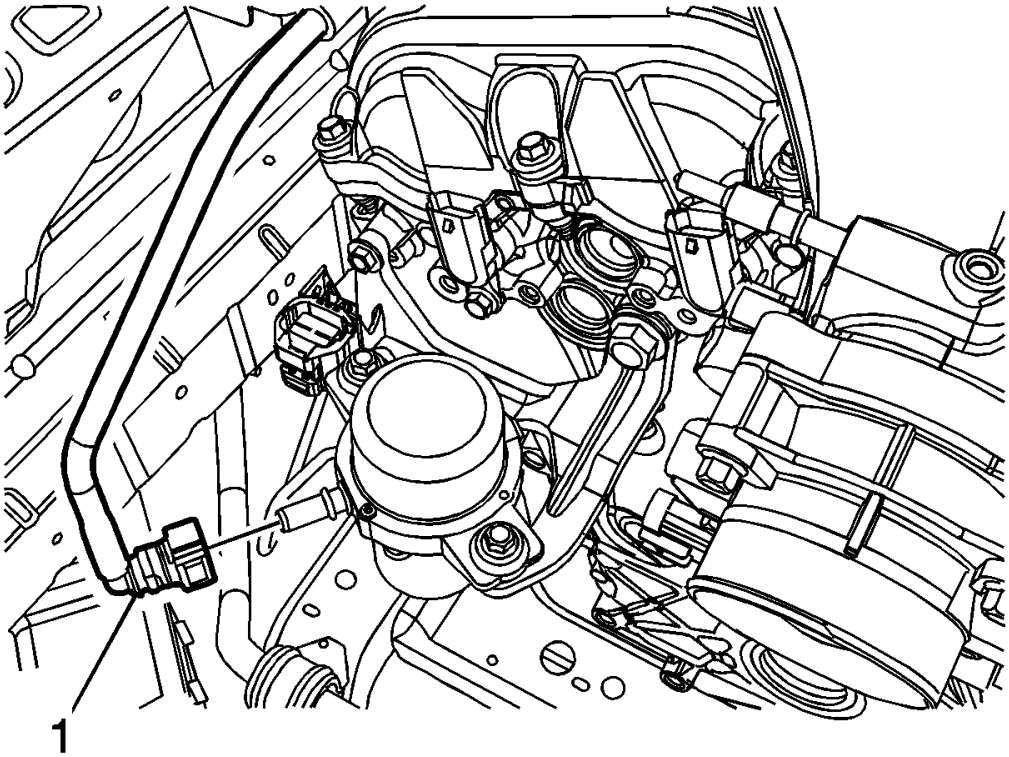

Fig. 298: Power Brake Booster Vacuum Hose Quick Connect At Power Brake Booster Vacuum Pump (LFX)
Courtesy of GENERAL MOTORS COMPANY

24. Connect the power brake booster vacuum hose quick connect (1) to the power brake booster vacuum pump.

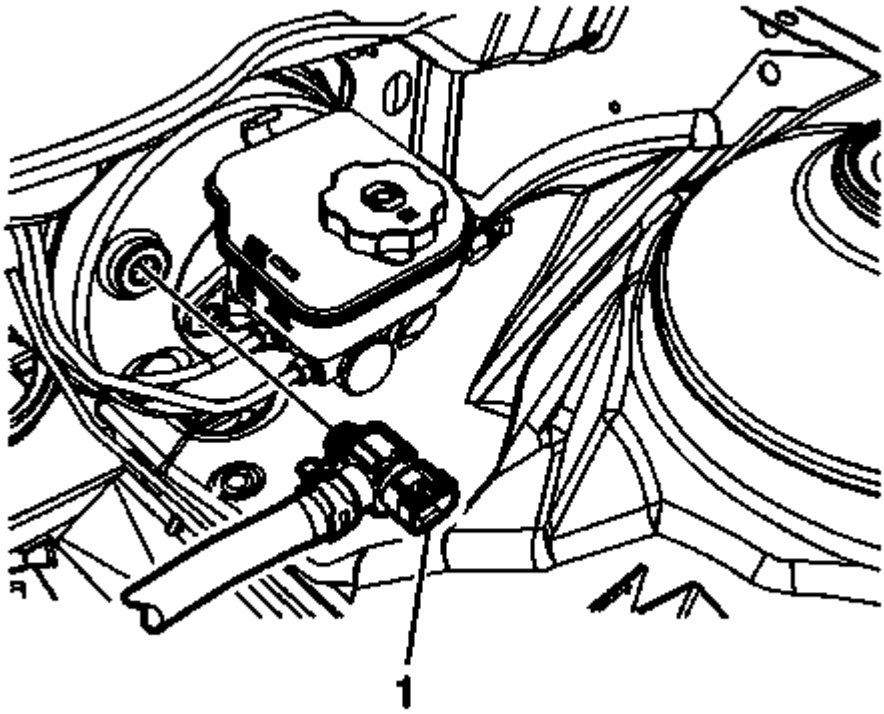

Fig. 299: Check Valve (LFX)
Courtesy of GENERAL MOTORS COMPANY

25. Install the check valve (1) and hose assembly to the vacuum brake booster.
26. Install the air cleaner assembly. Refer to **Air Cleaner Assembly Replacement** .
27. Install the air cleaner outlet duct hose. Refer to **Air Cleaner Outlet Duct Replacement**
28. Install the transmission. Refer to the appropriate procedure:
    - **Transmission Replacement** for the 6L45/6L50/6L80/6L90 transmission
    - **Transmission Replacement** for the Aisin AY6 transmission
    - **Transmission Replacement** for the Tremec 6-speed transmission
29. Charge the A/C system. Refer to **Refrigerant Recovery and Recharging (Belt Driven Compressor)** .
30. Fill the engine cooling system. Refer to **Cooling System Draining and Filling (LFX, Static Fill)** , **Cooling System Draining and Filling (GE 47716)** .
31. Fill the engine oil. Refer to **Engine Oil and Oil Filter Replacement**.
32. Install the intake manifold cover. Refer to **Intake Manifold Cover Replacement - Rear**.
33. Connect the negative battery cable. Refer to **Battery Negative Cable Disconnection and Connection** .

ENGINE OIL AND ENGINE OIL FILTER REPLACEMENT

Removal Procedure

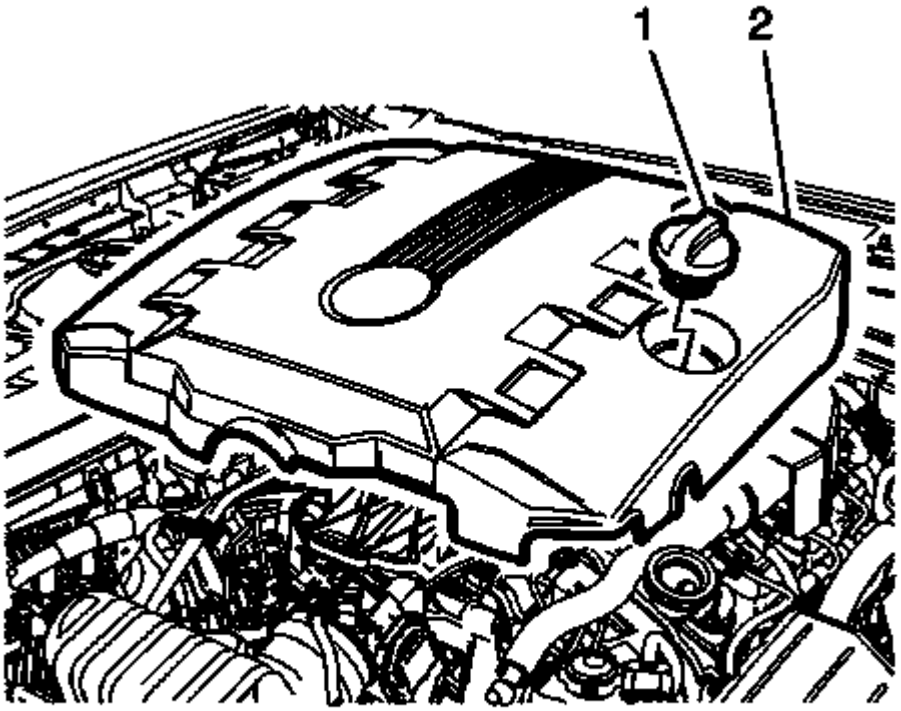

Fig. 300: Intake Manifold Cover & Cap
Courtesy of GENERAL MOTORS COMPANY

1. Remove the intake manifold cover (2). Refer to **Intake Manifold Cover Replacement - Front**.

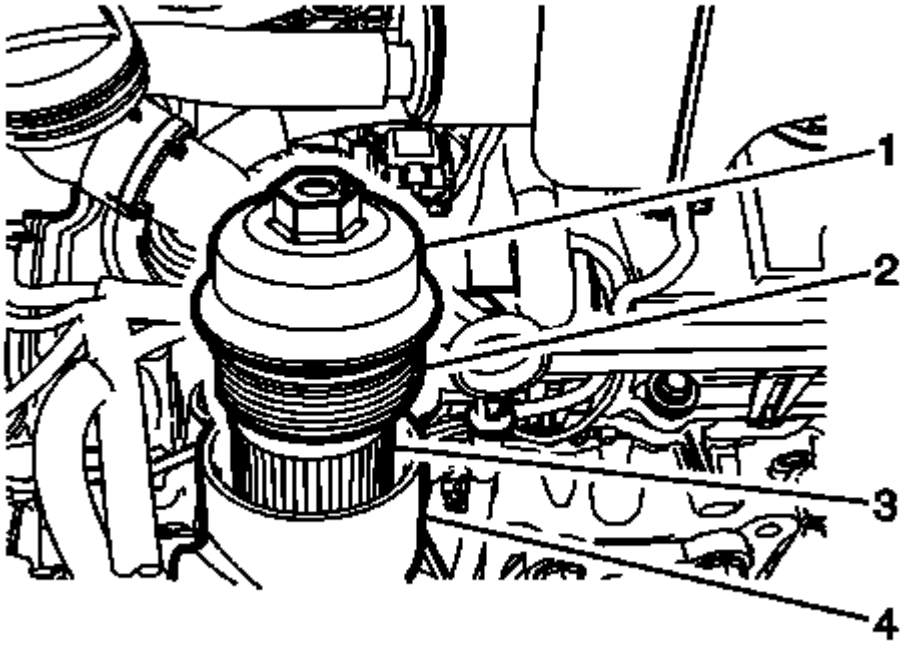

Fig. 301: Oil Filter & Components
Courtesy of GENERAL MOTORS COMPANY

NOTE: Use a 6-point socket to remove the oil filter cap.

2. Place a suitable drain pan below the oil filter adapter (4).
3. Remove the oil filter cap (1).

NOTE: It is normal for oil to drain from the oil filter chamber in the oil filter adapter housing. Do NOT replace the oil filter adapter for this condition.

4. Remove and discard the oil filter cartridge (3).
5. Remove and discard the oil filter cap O-ring (2).
6. Raise and support the vehicle. Refer to **Lifting and Jacking the Vehicle** .

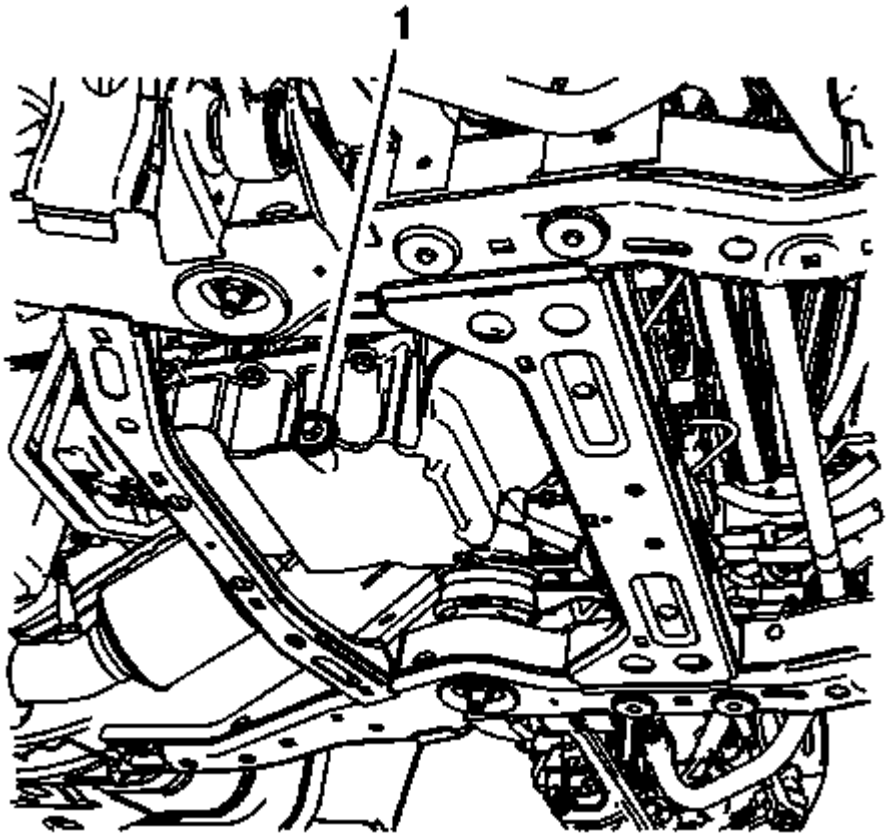

Fig. 302: Engine Oil Pan Drain Plug
Courtesy of GENERAL MOTORS COMPANY

7. Position the drain pan below the oil drain plug (1).
8. Remove the oil pan drain plug (1).
9. Remove and discard the oil drain plug seal.
10. Allow the oil to drain completely.

Installation Procedure

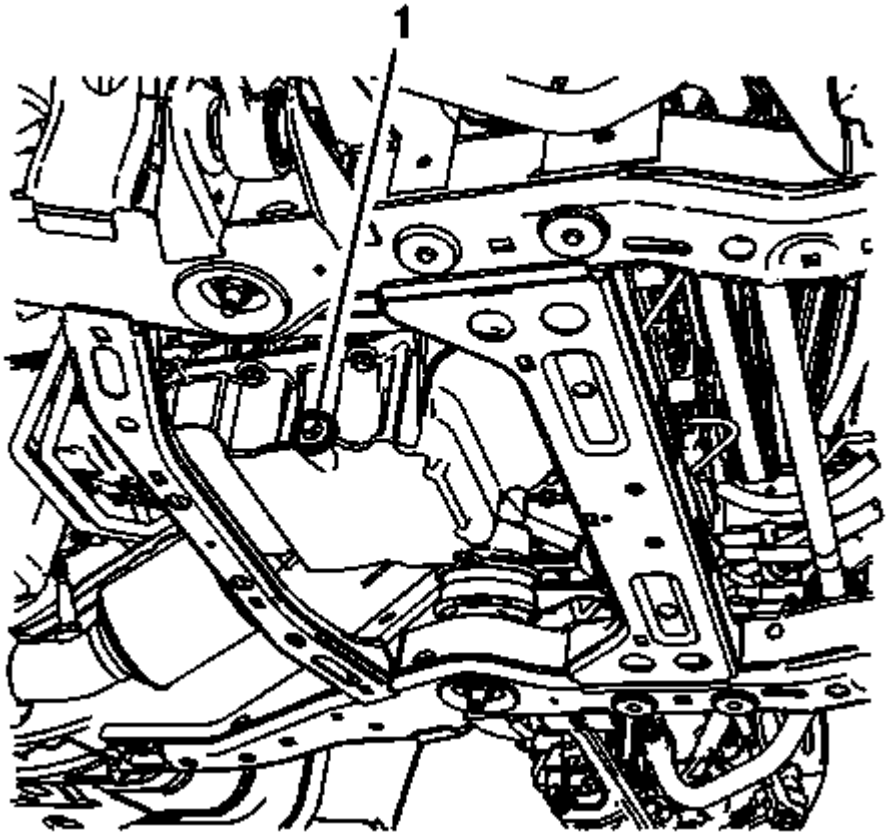

Fig. 303: Engine Oil Pan Drain Plug
Courtesy of GENERAL MOTORS COMPANY

CAUTION: Refer to Fastener Caution .

1. Install the oil pan drain plug and NEW drain plug seal and tighten to 25 N.m (18 lb ft).
2. Lower the vehicle.

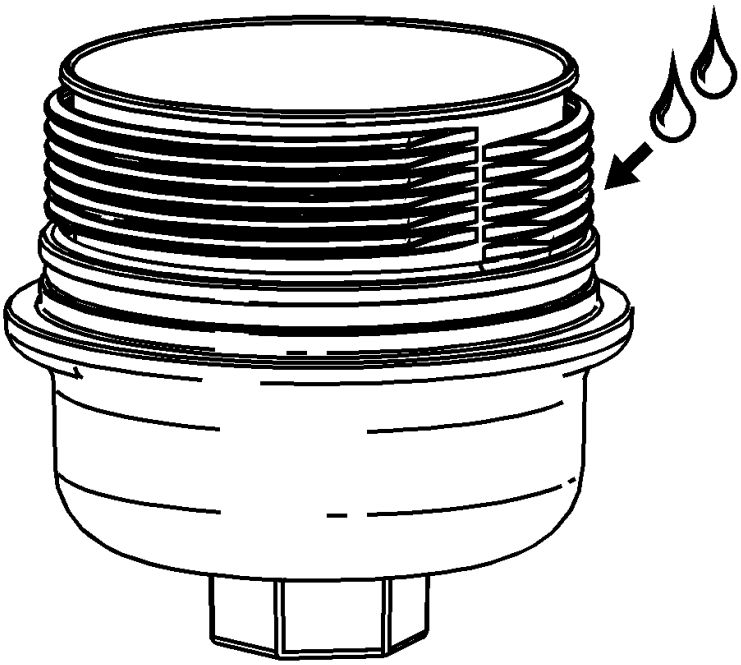

Fig. 304: Lubricating Threads Of Oil Filter Cap
Courtesy of GENERAL MOTORS COMPANY

CAUTION: Lubrication must be applied to the threads of the oil filter cap prior to installation. Failure to lubricate the oil filter cap threads can hinder later removal and cause possible oil filter cap damage.

3. Lubricate the oil filter cap threads and NEW O-ring with clean engine oil.

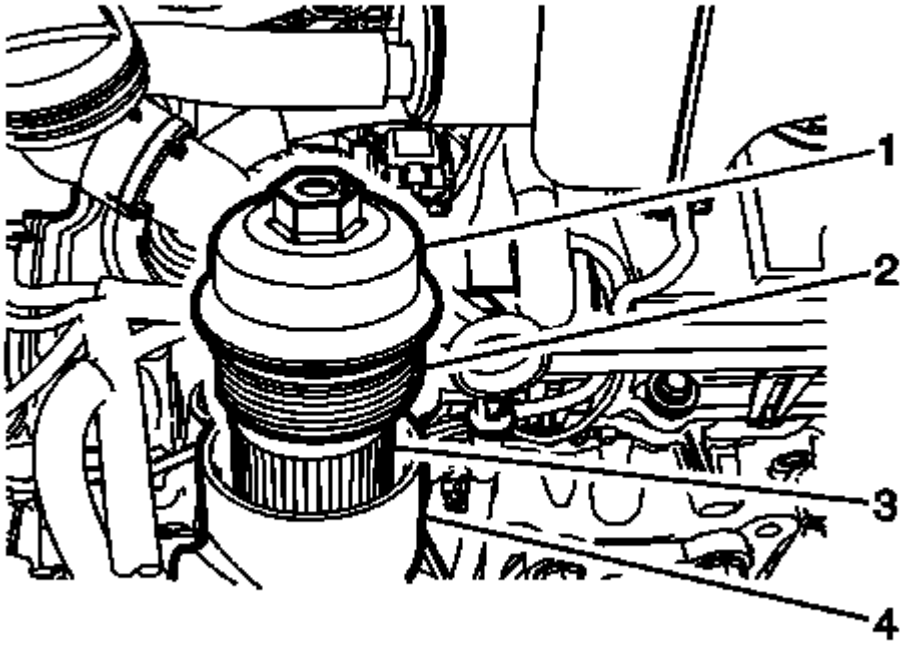

Fig. 305: Oil Filter & Components
Courtesy of GENERAL MOTORS COMPANY

CAUTION: Proper oil filter cap tightening is mandatory. Failure to tighten the oil filter cap to the proper specification can hinder later removal and cause possible oil filter cap damage.

NOTE: Use a 6-point socket to install the oil filter cap.

4. Install a NEW oil filter cartridge (3).
5. Install the oil filter cap (1) and tighten to 25 N.m (18 lb ft).
6. Fill the engine with the appropriate oil type and quantity. Refer to **Fluid and Lubricant Recommendations** , and **Approximate Fluid Capacities** .

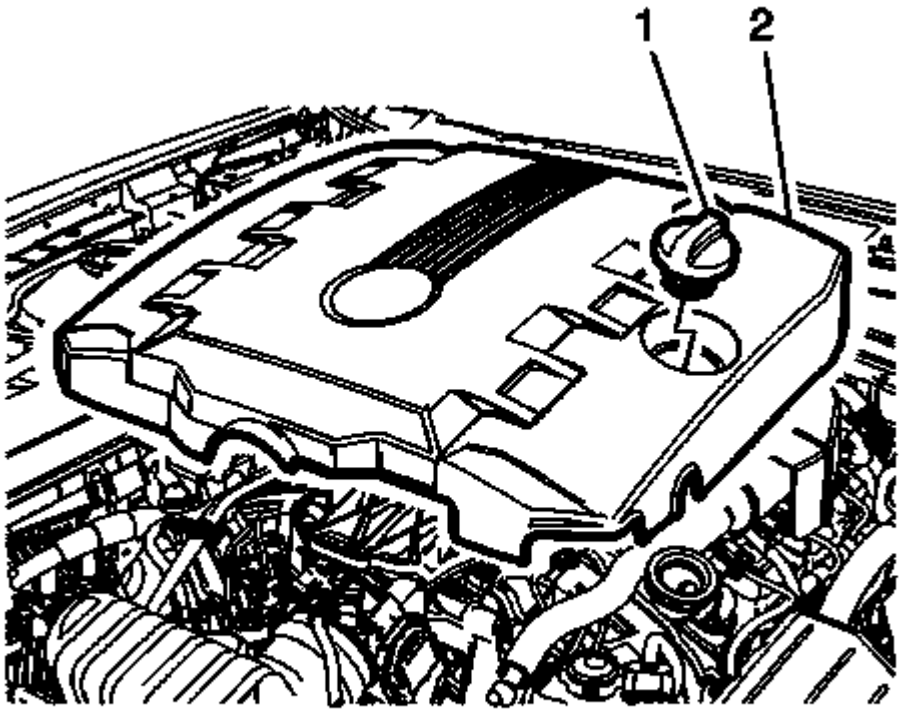

Fig. 306: Intake Manifold Cover & Cap
Courtesy of GENERAL MOTORS COMPANY

7. Install the intake manifold cover (2). Refer to **Intake Manifold Cover Replacement - Front**.

